State of California
AIR RESOURCES BOARD

Executive Order G-70-107

Certification of Rainbow Petroleum Products
Model RA3003, RA3005, RA3006 and RA3007
Vapor Recovery Nozzles
and Vapor Recovery Components

WHEREAS, the Air Resources Board (the "Board") has established, pursuant to Sections 39600, 39601, and 41954 of the Health and Safety Code, certification procedures for systems designed for the control of gasoline vapor emissions during motor vehicle fueling operations ("Phase II vapor recovery systems") in its "Certification Procedures for Gasoline Vapor Recovery Systems at Service Stations", adopted March 30, 1976 and amended August 25, 1977 and December 4, 1981 (the "Certification Procedures"), incorporated by reference in Section 94001 of Title 17, California Administrative Code;

WHEREAS, the Board has established, pursuant to Sections 39600, 39601, and 41954 of the Health and Safety Code, test procedures for determining compliance of Phase II vapor recovery systems with emission standards in its "Test Procedures for Determining the Efficiency of Gasoline Vapor Recovery Systems at Service Stations", adopted on December 9, 1975 and amended on March 30, 1976, August 9, 1978, December 4, 1981 and September 1, 1982 (the "Test Procedures"), incorporated by reference in Section 94000 of Title 17, California Administrative Code;

WHEREAS, Rainbow Petroleum Products, hereinafter referred to as "Rainbow Petroleum", has applied for certification of the following:

1. Rainbow Petroleum Models RA3003 and RA3005 rebuilt Emco Wheaton Models A3003 and A3005 balance type vapor recovery nozzles for use with existing balance Phase II vapor recovery systems. The balance nozzle consists of an Emco Wheaton Model A3003 and A3005 nozzle body and "Rainbow Petroleum" manufactured components for the nozzle core and the front end of the nozzle;

2. Rainbow Petroleum manufactured components for Emco Wheaton Models A3003 and A3005 vapor recovery nozzles ("manufactured components");

3. Rainbow Petroleum Models RA3006 and RA3007 rebuilt nozzle cores and spouts for the Emco Wheaton Models A3006 and A3007 assist type vapor recovery nozzles; and

4. Rainbow Petroleum bellows for use with the OPW Model 7V-E vacuum assist type, vapor recovery nozzle.

WHEREAS, the "Rainbow Petroleum" rebuilt nozzles and manufactured components have been evaluated pursuant to the Air Resources Board's Certification Procedures and Test Procedures;

WHEREAS, Section VII-A of the Certification Procedures provides that the Executive Officer shall issue an order of certification if he or she determines that a vapor recovery system conforms to all of the requirements set forth in Sections I through VII of the Certification Procedures;

WHEREAS, I find that the Rainbow Petroleum balance and assist nozzles, and manufactured components, when used with the existing balance or existing assist Phase II vapor recovery systems conform with all of the requirements set forth in Sections I through VII of the Certification Procedures as amended on December 4, 1981, and would result in vapor recovery systems that are at least 95 percent effective for attendant and/or self-serve use at gasoline service stations when used in conjunction with Phase I vapor recovery systems that have been certified by the Board;

WHEREAS, I find that evaluations of the Rainbow Petroleum production facility and the nozzles and manufactured components set forth in this Executive Order by a State Fire Marshal approved independent inspection service agency, which evaluations include on-site inspections of the production facility, nozzles, and manufactured components at least four times per year, are necessary to ensure that Rainbow Petroleum maintains the level of quality exhibited in its nozzles and manufactured components used in certification testing; and

WHEREAS, I find that it is necessary for each Rainbow Petroleum nozzle and manufactured component to be marked such that it is clear that the nozzles were rebuilt or manufactured by Rainbow Petroleum.

NOW, THEREFORE, IT IS HEREBY ORDERED that the Rainbow Petroleum Models RA3003 and RA3005 balance nozzles, bellows, faceplates and other nozzle components, along with the Rainbow Petroleum Models RA3006 and RA3007 assist nozzle cores and spouts are hereby certified for use with appropriate existing balance Phase II vapor recovery systems and assist Phase II vapor recovery systems, (respectively) subject to the following:

1. The maximum gasoline dispensing rate through nozzles shall be 10 gallons per minute;

2. All nozzles and components shall be clearly marked as shown in Exhibit 1 so as to identify that they were provided by Rainbow Petroleum; and

3. Rainbow Petroleum must enter into an agreement with a State Fire Marshal approved independent inspection service agency within 30 days after this Executive Order is issued. The agreement shall, at a minimum, provide for an initial evaluation of Rainbow Petroleum's production facility and products certified in this Executive Order, and for quarterly on-site inspections of the product facility and products certified in this Executive Order. Initial testing must be completed within ninety (90) days after this Executive Order is issued and quarterly inspections must begin within one hundred and eighty (180) days after this Executive Order has been issued.

IT IS FURTHER ORDERED that the Rainbow Petroleum bellows, for use with the OPW Model 7V-E vacuum assist vapor recovery nozzle, is hereby certified for use with the appropriate assist Phase II vapor recovery systems. The bellows shall be clearly marked as shown in Exhibit 2.

IT IS FURTHER ORDERED that compliance with the applicable certification requirements and rules and regulations of the Division of Measurement Standards, the State Fire Marshal's Office and the Division of Occupational Safety and Health of the Department of Industrial Relations is made a condition of this certification.

IT IS FURTHER ORDERED that the nozzles and manufactured components certified hereby shall perform in actual use with the same effectiveness as the certification test nozzles and manufactured components.

IT IS FURTHER ORDERED that any alteration of the equipment, parts, design, or operations on the configurations certified hereby, is prohibited, and deemed inconsistent with this certification, unless such alteration has been approved by the undersigned, or the Executive Officer's designee.

IT IS FURTHER ORDERED that the Rainbow Petroleum nozzles shall be 100 percent performance checked at the factory including checks of proper operation in all aspects of performance.

Executed at Sacramento, California this 15th day of May, 1986.

James D. Boyd
Executive Officer

RA3003, RA3005, RA3006, RA3007 VAPOR RECOVERY NOZZLE INDENTIFICATION FOR BALANCE SYSTEMS (RA3003 Shown)

EXHIBIT 1

Executive Order G-70-107

Listed below are Rainbow Petroleum Products Rebuilt Balance System Nozzles.

RA3003-009	(leaded)	Dual Port
RA3003-010	(unleaded)	Dual Port
RA3005-001	(leaded)	Coaxial Port
RA3005-002	(unleaded)	Coaxial Port
RA3006-001	(leaded)	Dual Port
RA3006-002	(unleaded)	Dual Port
RA3007-09	(leaded)	Coaxial Port
RA3007-10	(unleaded)	Coaxial Port

*NOTE: Hold open device standard with each model.

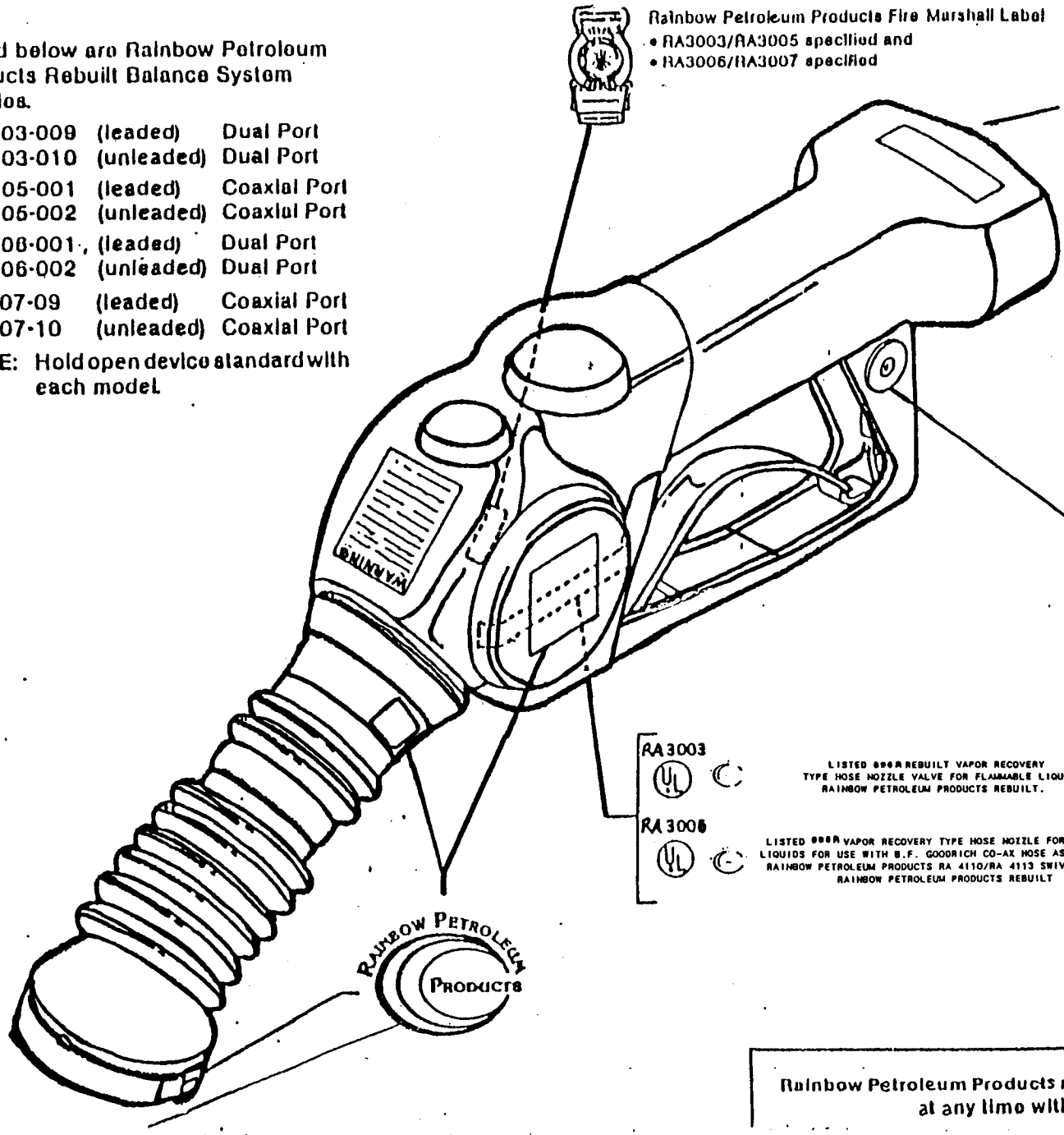

U.L. Label
- Rebuilt Nozzles Indicated
- Co-Ax Hose Indicated when applicable
- NOTE: * Lift Scuff guard on left hand side (over vacuum diaphram) to location on U.L. Label.

Rainbow Petroleum Products reserves the right to change specifications at any time without incurring obligations.

EXHIBIT 2

Executive Order G-70-107

7 V REMANUFACTURED VAPOR RECOVERY ASSIST NOZZLE (MODEL RPP 47 SHOWN)

MODEL SYSTEM

RPP 47 RED JACKET

- 34 Full Serve, Leaded
- 47 Full Serve, Unleaded
- 36 Self Serve, Leaded
- 49 Self Serve, Unleaded

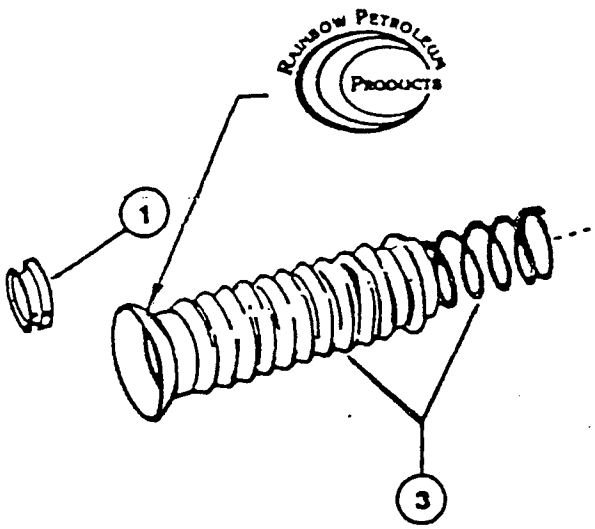

1. End Ring
3. Bellows Kit Assembly