State of California
AIR RESOURCES BOARD

# Executive Order G-70-118-AB

## Modification to the Certification of the Amoco Oil Company V-1 Bootless Nozzle Vapor Recovery System

WHEREAS, the California Air Resources Board ("the Board" or "CARB") has established, pursuant to California Health and Safety Code Sections 39600, 39601 and 41954, certification procedures for systems designed for the control of gasoline vapor emissions during motor vehicle fueling operations (Phase II vapor recovery systems) in its "Certification Procedures for Gasoline Vapor Recovery Systems at Service Stations" (the "Certification Procedures") as last amended December 4, 1981, incorporated by reference into Title 17, California Code of Regulations, Section 94001;

WHEREAS, the Board has established, pursuant to California Health and Safety Code Sections 39600, 39601 and 41954, test procedures for determining the compliance of Phase II vapor recovery systems with emission standards in its "Test Procedures for Determining the Efficiency of Gasoline Vapor Recovery Systems at Service Stations" (the "Test Procedures") as last amended September 1, 1982, incorporated by reference into Title 17, California Code of Regulations, Section 94000;

WHEREAS, Amoco Oil Company ("Amoco"), requested and was granted certification of the Amoco V-1 bootless nozzle vapor recovery system (the "V-1 system") pursuant to the Certification Procedures and Test Procedures on June 24, 1988, by Executive Order G-70-118, and was granted modifications to the certification by Executive Order G-70-118-AA, issued March 10, 1993;

WHEREAS, Amoco requested certification of a modified V-1 system. The modification consists of the installation of a non-optional Efficiency Compliance Device (ECD) on the nozzle;

WHEREAS, the modified V-1 system has been evaluated pursuant to the Board's Certification Procedures;

WHEREAS, Section VIII-A of the Certification Procedures provides that the Executive Officer shall issue an order of certification if he or she determines that the vapor recovery system conforms to all of the requirements set forth in Sections I through VII of the Certification Procedures; and

WHEREAS, I, James D. Boyd, Air Resources Board Executive Officer, find that the Amoco V-1 system with the ECD installed on the nozzle conforms with all the requirements set forth in Sections I through VII of the Certification Procedures, and results in a vapor recovery system which is at least 95 percent effective for attendant and/or self-serve use at gasoline service stations when used in conjunction with a Phase I vapor recovery system which has been certified by the Board.

NOW, THEREFORE, IT IS HEREBY ORDERED that the Amoco system, when equipped with nozzles which have an ECD in functional condition, as defined in Exhibit 2 of this Order, and when used with a CARB-certified Phase I system, as specified in Exhibit 2 of this Order, is certified to be at least 95 percent effective in attended and/or self-serve mode. Fugitive emissions which may occur when the underground storage tanks are under positive pressure have not been quantified and were not included in the calculation of system effectiveness. Exhibit 1 contains a list of the equipment certified for use with the Amoco system. Exhibit 2 contains installation and performance specifications for the system. Exhibit 3 contains hose and dispenser configurations for the system. Exhibit 4 contains the static decay test procedure.

IT IS FURTHER ORDERED that the maximum dispensing rate for installations of the Amoco system shall not exceed ten (10.0) gallons per minute. This is consistant with the flowrate limitation imposed by United States Environmental Protection Agency as specified in the Federal Register, Volume 58, Number 55, page 16019.

IT IS FURTHER ORDERED that compliance with the certification requirements and rules and regulations of the Division of Measurement Standards of the Department of Food and Agriculture, the State Fire Marshal's Office, and the Division of Occupational Safety and Health of the Department of Industrial Relations is made a condition of this certification.

IT IS FURTHER ORDERED that the following requirements are made a condition of certification. The Amoco system shall be installed only in facilities which are capable of demonstrating on-going compliance with the vapor integrity requirements contained in Exhibit 4 of this Order. The owner or operator of the installation shall conduct, and pass, a static pressure decay test at least once in each twelve month period, and the results shall be made available to the district upon request within fifteen days after the test is conducted, or within fifteen days of the request. Alternative test procedures may be used if determined by the Executive Officer to yield comparable results.

IT IS FURTHER ORDERED that the system, as installed, shall comply with the procedures and performance standards which the test installation was required to meet during certification testing. Local districts may adopt stricter procedures or performance standards in accordance with the California Health and Safety Code section 41954 (g). Failure to demonstrate compliance with district procedures or performance standards stricter than those imposed during certification testing does not, per se, constitute failure of the V-1 system to meet the terms and conditions of this Executive Order. If, in the judgment of the Executive Officer, a significant fraction of installations fail to meet the specifications of this certification, or if a significant portion of the vehicle population is found to have configurations which significantly impair the system's collection efficiency, the certification itself may be subject to modification, suspension or revocation.

IT IS FURTHER ORDERED that all nozzles approved for use with the Amoco system shall be 100 percent performance checked at the factory, including checks of the integrity of the vapor and liquid path, as specified in Exhibit 2 of this Order, and of the proper functioning of all automatic shut-off mechanisms.

IT IS FURTHER ORDERED that each vapor pump shall be adjusted and 100 percent performance checked at the factory, including verification that the vapor recovery pump performance is within the range specified in Exhibit 2 of this Order.

IT IS FURTHER ORDERED that the certified V-1 system shall be warranted in writing, for at least three years, to the ultimate purchaser and each subsequent purchaser, that the vapor recovery system is designed, built and equipped so as to conform at the time of original installation or sale with the applicable regulations and is free from defects in materials and workmanship which would cause the vapor recovery system to fail to conform with applicable regulations. Copies of the manufacturer's warranty for the V-1 system shall be made available to the station manager, owner or operator. Hoses, nozzles and breakaway couplings shall be warranted to the ultimate purchaser as specified above for at least one year, or for the expected useful life, whichever is longer.

IT IS FURTHER ORDERED that the certified V-1 system shall, at a minimum, be operated in accordance with the manufacturer's recommended maintenance intervals and shall use the manufacturer's recommended operation, installation, and maintenance procedures.

IT IS FURTHER ORDERED that the certified V-1 system shall be performance tested during installation for ability to dispense gasoline and collect vapors without difficulty, in the presence of the station operator, owner or designee. The station operator, owner or designee shall be provided with copies of the installation and maintenance manuals for the V-1 system and components, to be maintained at the station, and shall also be provided with instructions in the proper use of the V-1 system, its repair and maintenance, and where and how system and/or component replacements can be readily obtained.

IT IS FURTHER ORDERED that any alteration of the equipment, parts, design, or operation of the systems certified hereby is prohibited, and deemed inconsistent with this certification, unless such alteration has been approved by the Executive Officer or his/her designee.

IT IS FURTHER ORDERED that the Amoco V-1 system certification Executive Orders G-70-118, issued June 24, 1988, and G-70-118-AA, issued March 10, 1993, are hereby superceded by this Executive Order.

Executed at Sacramento, California this 31 day of March, 1995.

James D. Boyd
Executive Officer

Attachments

## Executive Order G-70-118-AB

## Exhibit 1
## Amoco V-1 System Equipment List

| Component | Manufacturer/Model | State Fire Marshal Identification Number |
|---|---|---|
| **Nozzle** | OPW 11V-J51[1] with ECD* (not optional) | 005:008:043 |
| | OPW 11V-J61[1] with ECD* (not optional) | 005:008:043 |
| | OPW 11-VAA[2] (Figure 2C-1) with ECD* (not optional) | 005:008:049 |
| | Husky Model V-1 (Figure 2C-2) with ECD* (not optional) | 005:021:006 |
| | OR<br>Any bootless nozzle certified in an Executive Order which identifies the Amoco V-1 system as compatible. | |
| | * ECD: Efficiency Compliance Device | |
| **Vapor Pump** | Blackmer Model VR-3/4<br>Non-electric, fluid pressure driven positive displacement vane pump. | 001:039:001 |
| **Breakaway Couplings** | Any CARB-certified coaxial breakaway listed in the current revision of Executive Order G-70-52 which has a valve which closes the vapor path when separated.<br><br>Exception: For systems installed before two CARB-certified breakaways which meet the above criteria are available, or within sixty days after that date, a breakaway which does not close the vapor path but which is listed in the current revision of Executive Order G-70-52 may be used for a period not to exceed four years from the date the second valve was certified. | |
| **Coaxial Hose** | Any CARB-certified coaxial hose listed in the current revision of Executive Order G-70-52. | |
| **Liquid Removal System** | Required for all installations. Any Board-certified liquid removal system listed in the current revision of Executive Order G-70-52 which complies with the liquid removal specifications in Exhibit 3 may be used. | |

**Flow Limiter**

If a flow limiter is necessary to comply with 10 gpm limit, only a CARB-approved flow limiter may be used. Flow limiters are listed in the current revision of G-70-52.

**Pressure/Vacuum Valve**

| | |
|---|---|
| OPW 523LP, 523LPS<br>(settings as specified below) | 005:008:051 |
| Hazlett H-PVB-1 Gold label<br>(settings as specified below) | 005:017:004 |

OR

Any CARB-certified valve with the following pressure and vacuum settings, in inches water column (wc):

Pressure: three plus or minus one-half inches (3.0 ± 0.5") wc.
Vacuum: eight plus or minus two inches (8 ± 2") wc.

Note: For systems installed before April 1, 1995, a valve with the following setting may be used until January 1, 1999. Local districts may require earlier replacement of these valves.

Pressure: at least one and not to exceed fourteen inches (1-14") wc
Vacuum: at least one-half ounce/inch$^2$ (0.87" wc).

**Dispensers**

Refer to Exhibit 3 for dispenser and hose configurations.
Note: the term "dispenser" refers to dispensing units for submerged turbine pumps, and does not include suction pump units.

**Footnotes:**

1 Applies only to nozzles which were installed before January 1, 1995. The installed nozzles may remain in use but no new or replacement nozzles of this type shall be installed after January 1, 1995. These nozzles do not contain liquid removal systems, and shall be used only with a CARB-certified liquid removal system.

2 The OPW 11-VAA nozzle and the Catlow Vapormate nozzle are identical. References to the OPW 11-VAA nozzle may be read as references to the Catlow Vapormate nozzle.

## Executive Order G-70-118-AB

## Exhibit 2

## Specifications for the Amoco System

Typical installations of the Amoco system are shown in Figures 2A.

<u>Nozzles</u>

1. An efficiency compliance device (ECD) shall be installed on the Husky V-1 and OPW 11-VAA nozzles at the base of the spout as shown in Figures 2C-1 and 2C-2. Any nozzle with an ECD which is missing is deemed defective and shall be immediately removed from service. For the Husky V-1 nozzle, any ECD which is damaged such that at least one-eighth (1/8) of the diameter is missing, or has cumulative damage equivalent to at least 1/8 of the diameter missing, is defective and shall be immediately removed from service. For the OPW 11-VAA nozzle, any ECD which is damaged such that a slit from the outer to inner edge exists, or has cumulative damage equivalent to this, is defective and shall be immediately removed from service. Any nozzles which was installed without an ECD prior to the issuance of this Order shall be equipped with an ECD within 60 days of the effective date of this Order, or shall then be considered defective.

2. The nozzles have an integral vapor valve which prevents the loss of vapor from the underground storage tanks, ensures proper operation of the system and prevents the ingestion of air into the system. Any nozzle with a defective vapor valve shall be immediately removed from service. The integrity of the system shall be restored by replacing the nozzle or otherwise closing the vapor path as soon as practicable.

3. Nozzles shall be 100 percent performance checked at the factory, including checks of all shutoff mechanisms and of the integrity of the vapor path. The Husky V1 and the OPW 11VAA nozzles contain a liquid removal system. When the appropriate liquid pick-up tube is installed in compliance with Exhibit 3 of this Order, this fulfills the requirement for a liquid removal system. The maximum allowable leak rate for the nozzle, including the vapor valve and, if present, the liquid removal system, shall not exceed the following:

   0.038 CFH at a pressure of two inches water column (2" wc), and
   0.005 CFH at a vacuum of twenty seven inches water column (approx 1 psi).

   No sealing of the vapor holes on the nozzle spout (such as placing a balloon or the fingers of a glove over the holes) is permitted during static pressure decay tests.

4. Failure mode testing demonstrated that blockage of some of the vapor collection holes in the spout has negligible effect on the operation of the system. Any Husky V-1 nozzle which is found to have less than two unobstructed vapor collection holes is defective and shall be immediately removed from service. Any OPW 11-VAA which is found to have less than three unobstructed vapor collection holes is defective and shall be immediately removed from service.

5. Leaded and unleaded spouts are interchangeable.

## Breakaway Couplings

1. Breakaway couplings are optional but, if installed, only certified breakaways may be used.

2. The following section does not apply to breakaways that contain a valve which closes the vapor path when it is separated. Operation of the system when a breakaway coupling is separated may allow vapor to escape from, or air to be ingested into, the system. CARB-certified breakaways which do not close the vapor path, but which were installed before April 1, 1995, may remain in use subject to the approval of the local district. Separated breakaways shall be recoupled, or the vapor path plugged, as soon as practicable. The local district may impose a specific time requirement.

## Coaxial Hose

1. The hoses shall be installed in conformance with the specifications contained in Exhibit 3 of this Order.

## Amoco V-1 System

1. The minimum air to liquid ratio of the system, uncorrected to standard temperature and pressure, measured at a flowrate of at least seven gallons per minute (7 gpm), shall be as high as or higher than the values listed below ( linear interpolation may be used to calculate intermediate values). Any fueling point not capable of demonstrating compliance with this performance standard shall be deemed defective and removed from service. The air to liquid ratio shall be determined by a CARB-approved or district-approved test procedure. (Draft procedure TP-201.5 may be used until an air to liquid ratio test procedure is adopted by CARB). Alternative test procedures may be used if they are determined by the Executive Officer to yield comparable results.

| Flow Rate (gpm) | Minimum Air To Liquid Ratio |
|---|---|
| 7 | 1.11 |
| 8 | 1.08 |
| 9 | 1.06 |
| 10 | 1.04 |

NOTES:

a. The test shall be conducted so as to ensure that the entire volume drawn by the pump is measured. If the test is performed such that the aspirator portion of the nozzle is included, the A/L ratios may be .05 to .10 higher than those listed above.

b. On systems with standard coaxial hoses, low A/L readings may indicate the presence of liquid in the coaxial hoses. The liquid should be removed by dispensing several gallons before continuing A/L testing.

c. This test procedure returns air rather than vapor to the storage tank, and normally causes an increase in storage tank pressure which may result in vent emissions. This is a temporary condition due to the test and should not be considered an indication of malfunction or noncompliance.

2. One Blackmer model VR-3/4 pump shall be installed for each dispensing nozzle.

3. Whenever possible, the pump shall be installed inside the dispenser cabinet. The pump shall be installed in accordance with the instructions of the manufacturer. Any modification of the dispenser piping must be made in accordance with the instructions of the dispenser manufacturer.

4. The pump shall be serviced only by a qualified contractor. Field service of the pump is prohibited.

5. The pump makes an audible clicking sound when operating normally. The clicking sound may be masked by background noise.

## Vapor Lines and Tank Vents

1. A pressure/vacuum (P/V) valve shall be installed on each tank vent. Vent lines may be manifolded provided the manifold is installed at a height not less than 12 feet above the driveway surface used for Phase I tank truck filling operations. At least one P/V valve shall be installed on manifolded vents. If two P/V valves are desired, they shall be installed in parallel, so that each can serve as a backup for the other if one should fail to open properly. The P/V valve shall be CARB-certified as specified in Exhibit 1. The outlets shall vent upward and be located to eliminate the possibility of vapor accumulating or traveling to a source of ignition or entering adjacent buildings.

2. The maximum allowable pressure drop through the system, measured at a flow rate of 60 SCFH with dry Nitrogen gas, shall not exceed 0.02 inches water column (0.03 inches wc if the measurement includes an inpact valve). The pressure drop from the dispenser riser to the UST shall be measured with the poppeted Phase I vapor connection open and with P/V valves installed or with the vents capped.

3. All vapor return lines shall slope a minimum of 1/8 inch per foot. A slope of 1/4 inch or more per foot is recommended wherever feasible.

4. The dispenser shall be connected to the riser with either flexible or rigid material which is listed for use with gasoline. The dispenser-to-riser connection shall be installed so that any liquid in the lines will drain toward the storage tank. The internal diameter of the connector, including all fittings, shall not be less than five-eighths inch (5/8").

5. The recommended nominal inside diameter of the underground Phase II plumbing is as indicated in 2A. Smaller vapor lines are not recommended but may be used provided the pressure drop criteria specified above are met. The vapor return lines shall be manifolded below grade at the tanks as indicated in the figures.

6. All vapor return and vent piping shall be installed in accordance with the manufacturer's instructions and all applicable regulations.

## Storage Tank and Phase I System

***WARNING***: Phase I fill caps should be opened with caution because the storage tank may be under pressure.

1. The local district may require the installation of a threaded tap at least 1/8" in diameter at which the underground storage tank (UST) pressure may be monitored. The tap may be in the dispenser riser connection or on the vent line, and shall be accessible for connection to a pressure gauge. One tap is adequate for manifolded systems. The tap shall remain plugged and vapor tight except when test equipment is being connected to or removed from it. The system shall not be allowed to operate when the taps are not vapor tight. If located on the vent line, the tap shall be at least six feet (6') and not more than eight feet (8') above grade. A high-quality quick-connect fitting with a vapor-tight cap may be installed instead of a plug if specified by the district.
   NOTE: Frequent venting (except when caused by air ingested into the system during the performance of the A/L ratio test, Phase I activities or other events not specifically caused by the Phase II system) may indicate system malfunction. Observation of rapid pressure decay when no vehicles are fueling may indicate leaks in the system; a static pressure decay test may be used to determine compliance with the vapor integrity requirements.

2. The Phase I system shall be a CARB-certified system which is in good working order and which demonstrates compliance with the static pressure decay test criteria contained in Exhibit 4 of this Order.

   After January 1, 1994, coaxial Phase I systems shall not be used with new installations of the V-1 system. Replacement of storage tanks at existing facilities, or modifications which cause the installation of new or replacement Phase I vapor recovery equipment, are considered new installations with regard to this prohibition. An exception to this prohibition may be made for coaxial Phase I systems CARB-certified after January 1, 1994, as compatible for use with Phase II systems which require pressure/vacuum vent valves.

   After January 1, 1994, where installation of the Amoco system is made by retrofitting previously installed equipment, local districts may elect to allow existing coaxial Phase I systems to remain in use for a specifically identified period of time provided the following conditions are met:

   - the existing coaxial Phase I system is a poppeted, CARB-certified system capable of demonstrating compliance with the static pressure decay test criteria in Exhibit 4 of this Order, including removal of all fill caps; and

   - installation of the Phase II system requires no modification of the UST(s) and/or connections.

3. Spill containment manholes which have drain valves shall demonstrate compliance with the static pressure decay criteria with the drain valves installed as in normal operation. Manholes with cover-actuated drain valves shall not be used in new installations (as defined above) after January 1, 1995. Manholes with cover-actuated drain valves may remain in use in facilities where installation of the V-1 system does not require modification

of the tank fittings provided the facility demonstrates compliance with static pressure decay test criteria both with the cover open and with the cover closed.

5. The Phase I vapor recovery system shall be operated during product deliveries so as to minimize the loss of vapors from the facility storage tank which may be under pressure. There shall be no less than one vapor return hose connected for each product being delivered. Provided it is not in conflict with established safety procedures, this may be accomplished in the following manner:

   - The Phase I vapor return hose is connected to the delivery tank and to the delivery elbow before the elbow is connected to the facility storage tank;
   - the delivery tank is opened only after all vapor connections have been made, and is closed before connection of any vapor return hoses;
   - the existing coaxial Phase I equipment is in good working order and has demonstrated compliance with static pressure decay test criteria when tested with all fill caps removed; and
   - the vapor return hose is disconnected from the facility storage tank before it is disconnected from the delivery tank.

**Non-Retail Fueling of Special Vehicles**

1. For non-retail outlets which fuel special vehicles, the installation of vapor recovery hoses longer than those specified in this Order are allowed if the following conditions are met:

   a. The non-retail outlet fuels special vehicles such as large trucks, large skip loaders, off-the-road equipment, etc., where reaching the fill pipe requires longer hoses.

   b. At least one of the following conditions exists:

      - A liquid system is installed capable of removing any accumulation of liquid which may occur with the proposed hose configuration;
      - The hoses are arranged to be self-draining;
      - Provisions are made to drain the hoses after each refueling;
      - The system incorporates an approved liquid blockage detection system arranged to cease dispensing when a blockage occurs.

   c. The Executive Officer has approved the plans for compliance with Condition b.

## Figure 2A

## Typical Vapor Return Piping Configuration for Amoco V-1 Vapor Recovery System

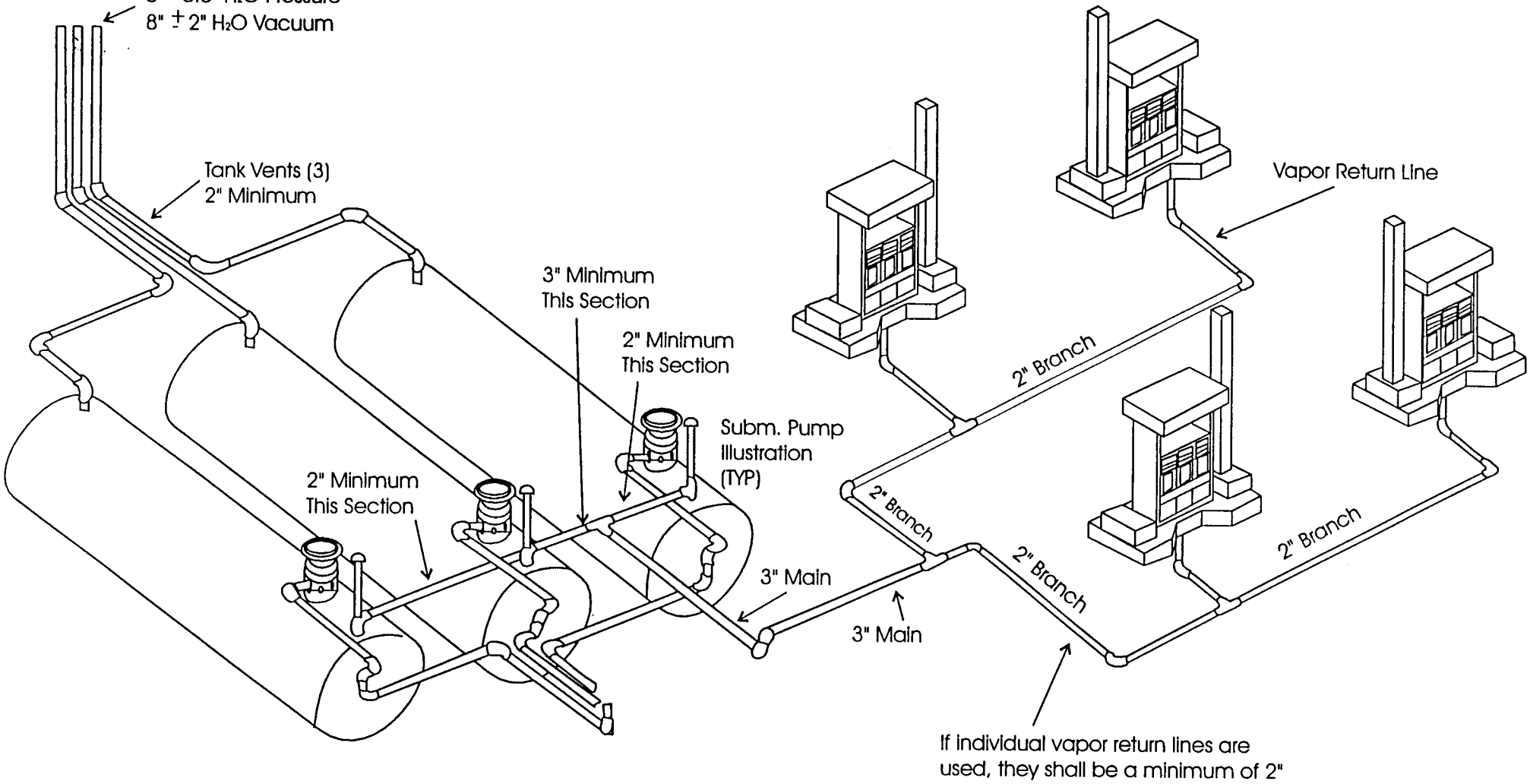


Note: Tanks may be manifolded at the vents in addition to or instead of under ground. Dedicated piping is acceptable providing the vent pipes are manifolded. At least one P/V valve shall be installed on manifolded vents. If two P/V valves are desired, they shall be installed in parallel. If the vents are manifolded, the manifold shall be at least 12 feet above the driveway surface used for Phase I

Figure 2B

## Typical Vapor Pump Installations for Amoco V-1 Vapor Recovery Syste

Typical Vapor Pump Hook-Up

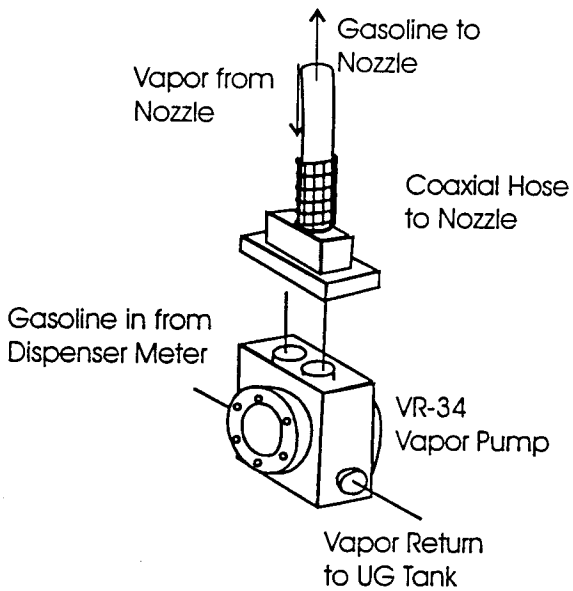


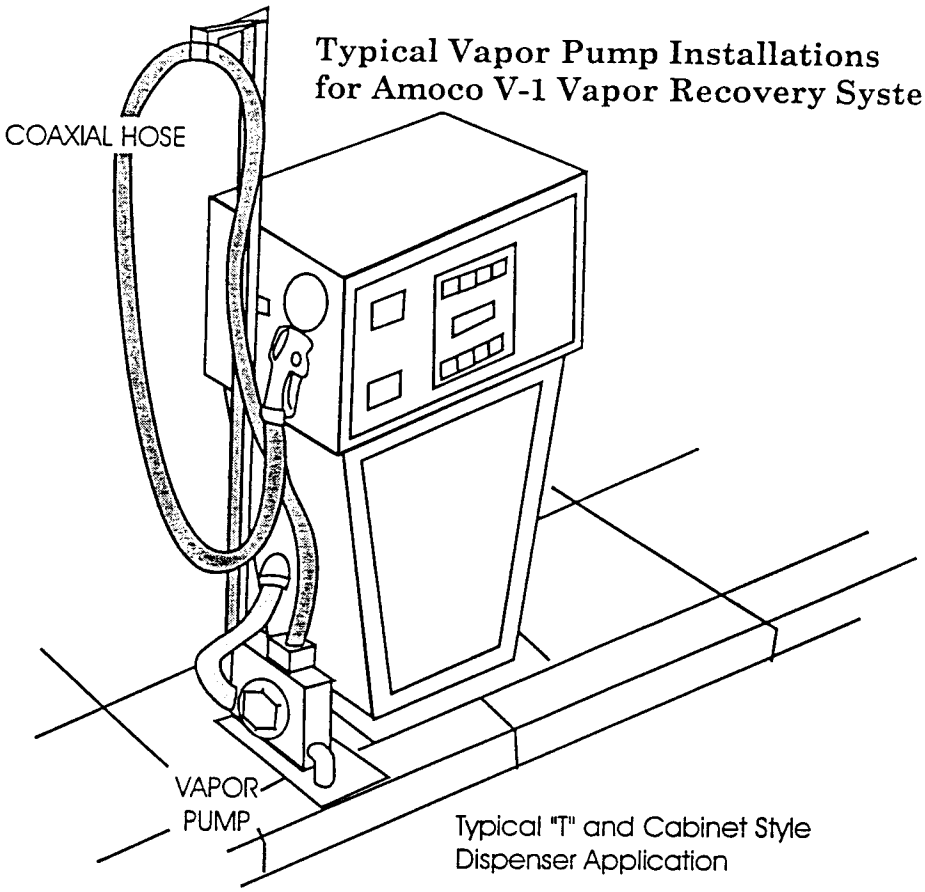


Typical "T" and Cabinet Style Dispenser Application

Note: Pump location varies with dispenser type. Vapor pumps shall be installed in accordance with the dispenser manufacturer's instructions.

Executive Order G-70-118-AB

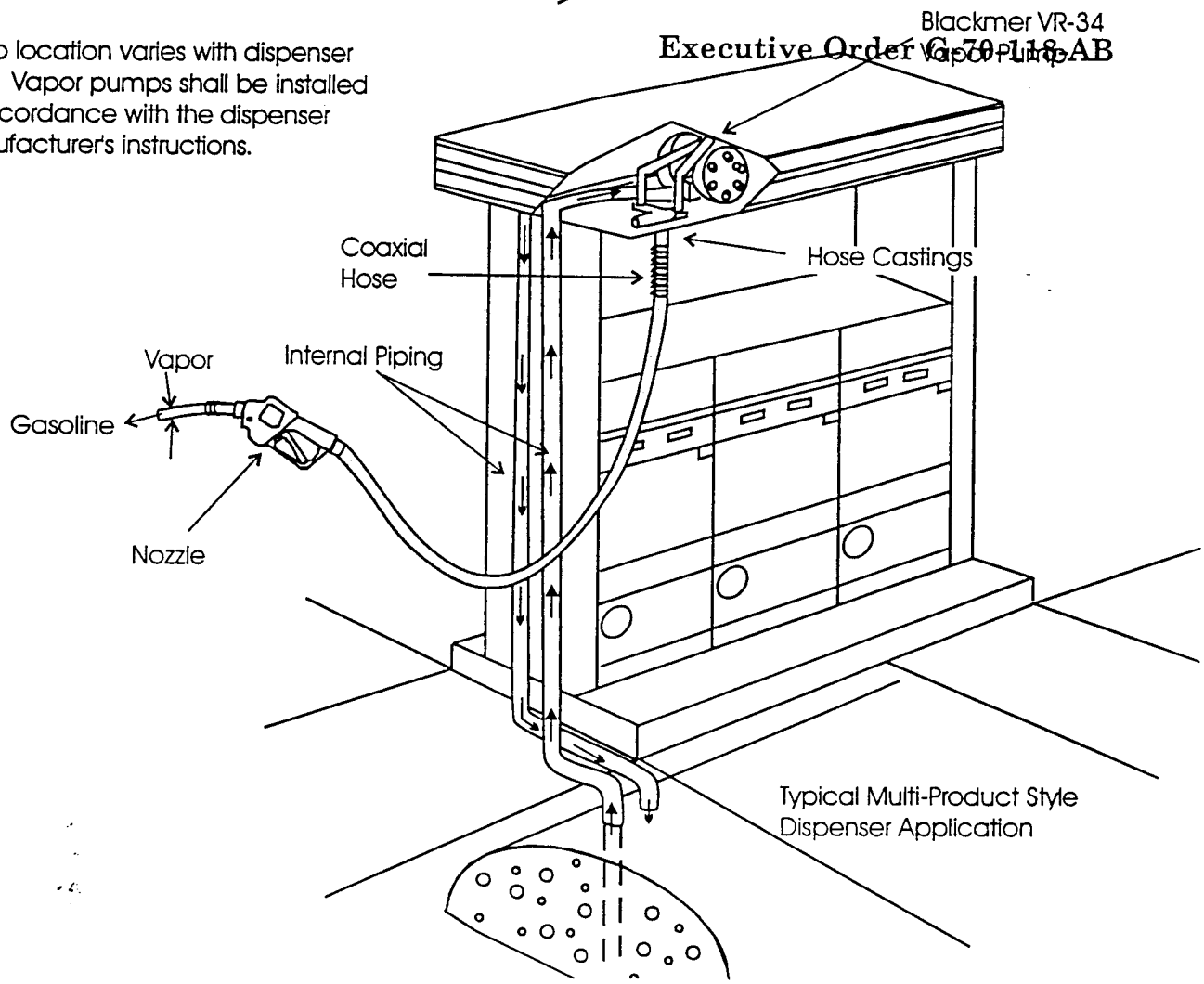


Typical Multi-Product Style Dispenser Application

Executive Order G-70-118-AB

Figure 2C-1

OPW MODEL 11VAA OR CATLOW VAPOR MATE
FOR AMOCO V-1 SYSTEM

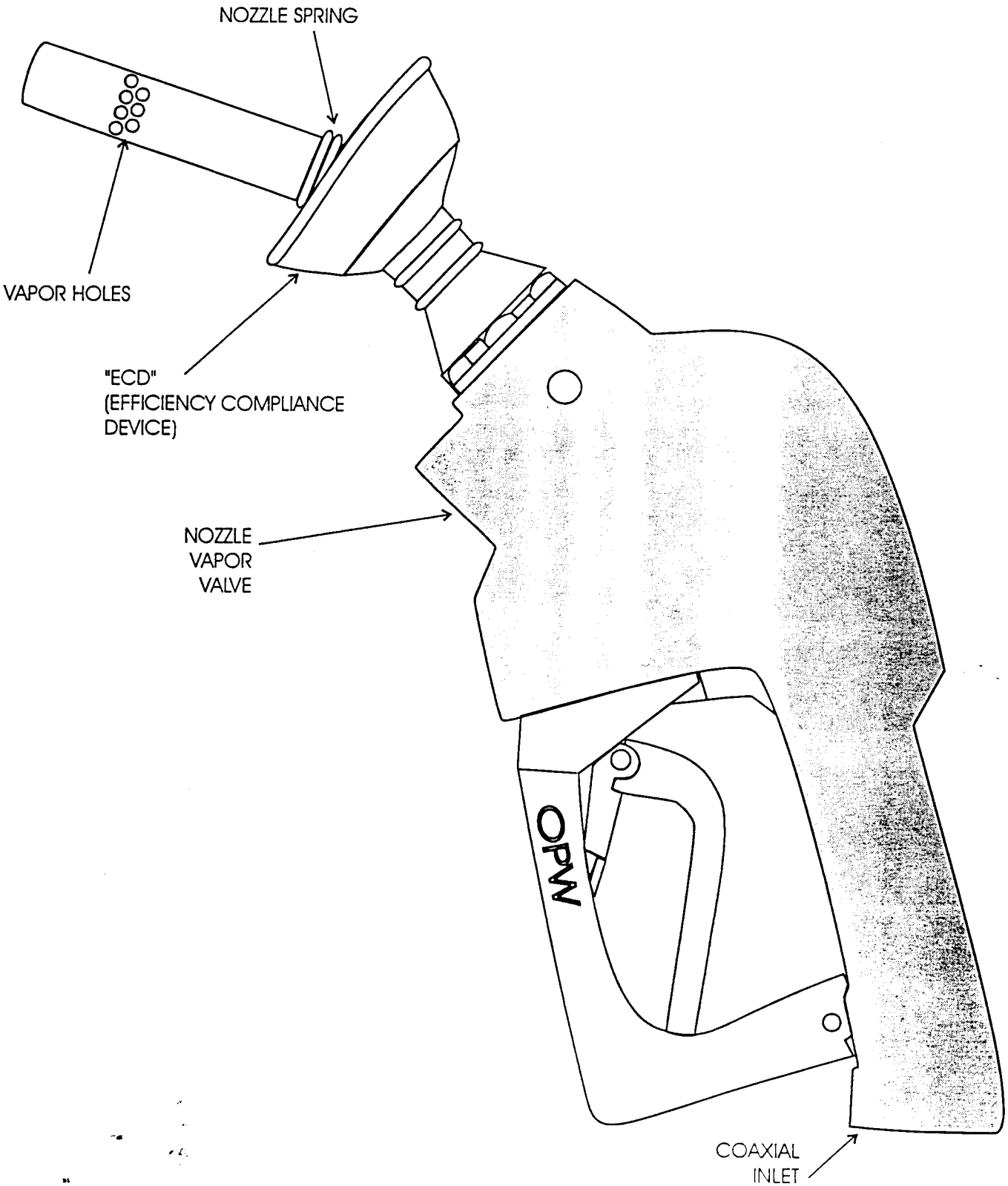

Executive Order G-70-118-AB

Figure 2C-2

HUSKY MODEL V-1
FOR AMOCO V-1 SYSTEM

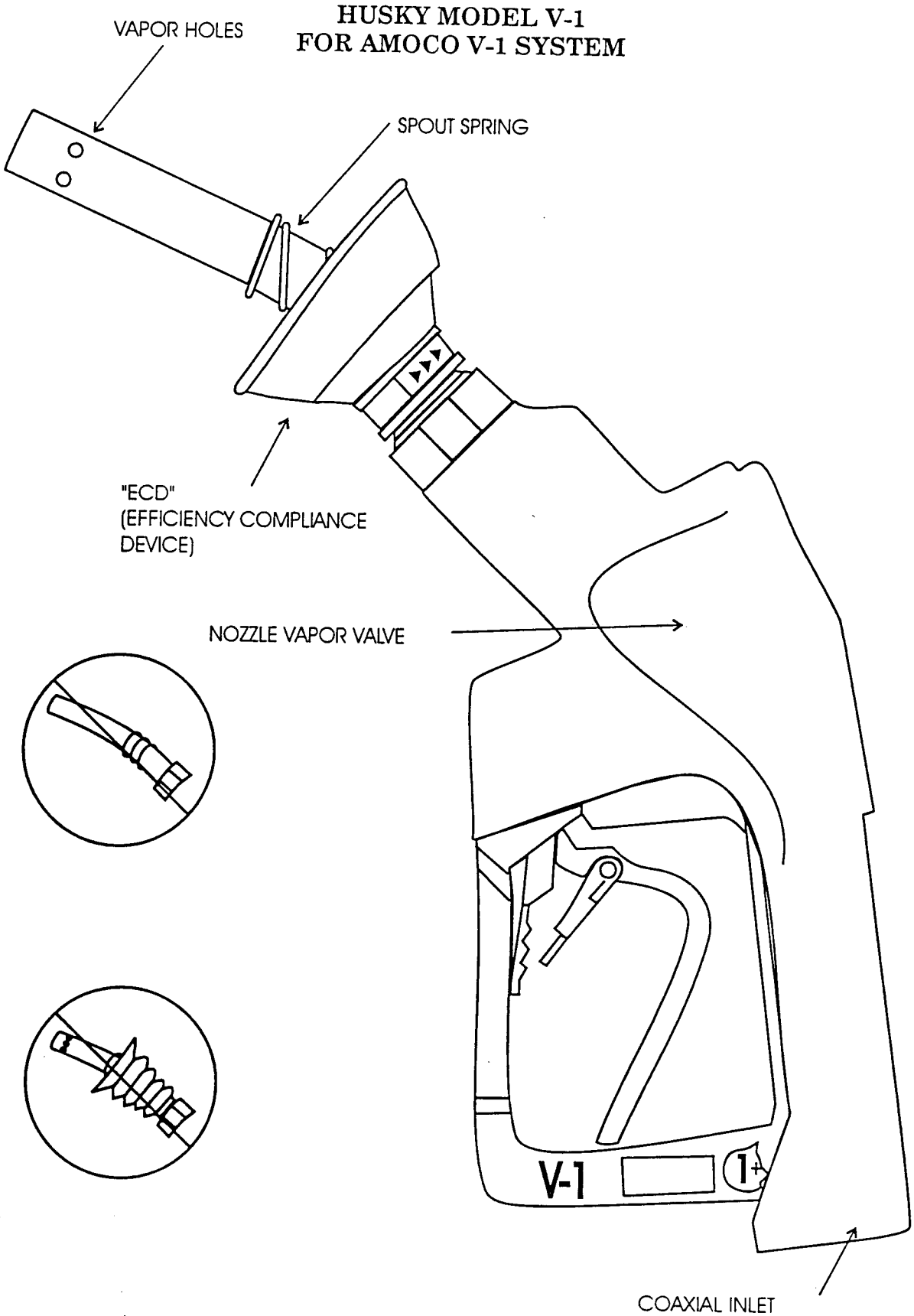

Executive Order G-  -118-AB

Figure 2D

Generic Schematic of Amoco V-1 Vapor Phase IIRecovery System

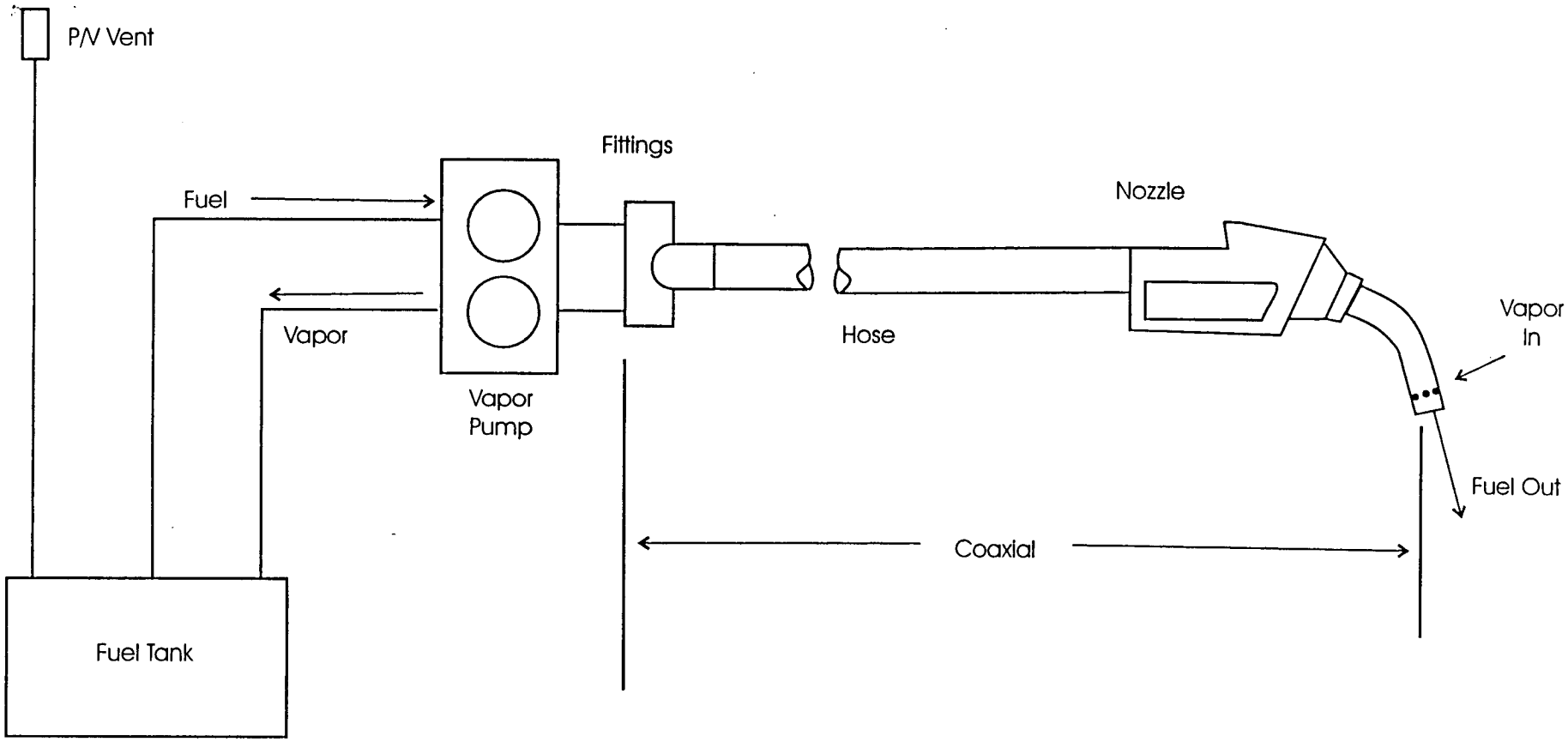

## Executive Order G-70-118-AB

## Exhibit 3

## Amoco V-1 Vapor Recovery System
## Hose and Dispenser Configurations

Figure 3-A contains diagrams of the hose configurations. The drawings are intended to be generic in nature and apply to dispensers similar to the models shown. Dispensers may have more or fewer hoses than shown.

**All Configurations**

1. A liquid removal system is required. The liquid removal system shall be located so as to be capable of removing at least 20 milliliters per minute when the nozzle is flowing at a rate of at least 4 gpm and is latched into the fillpipe of a vehicle which:

    - is parked with the fillpipe on the side of the vehicle closest to the dispenser being tested;
    - is parked four plus or minus one half feet (4±1/2') from the dispenser face; and
    - has a fillpipe located thirty inches plus or minus three inches (30±3") above the driveway surface.

2. The "hose assembly" includes all breakaways, optional swivels and other components. All hoses, including "pigtail hoses," are also specifically included in the term "hose assembly."

3. The hose may not touch the island or the ground when not in use. In the case of a dogbone island where the wider island ends protect the hose from damage by vehicle tires, the hose may touch the vertical face of the dogbone island at the option of the local air pollution control district.

4. Use one inch or larger inside diameter galvanized pipe for riser. (Exception: For Dispenser Configuration 5 only, 3/4 inch or larger ID vapor riser may be used.)

5. A CARB-approved flow limiter is required on all dispensers that have a maximum flowrate in excess of 10 gallons per minute.

**Dispenser Configuration 1** - High discharge coaxial hose configuration

1. The hose assembly may not exceed 10-1/2 feet in length.

**Dispenser Configuration 2** - High retractor coaxial hose configuration

1. The hose assembly may not exceed 12 feet in length.

2. The hose retractor shall fully retract the hose to the top of the dispenser when not in use. The tension on the retractor should not be in excess of that required to accomplish this.

3. The hose and retractor shall be installed so as to permit natural drainage from the retractor clamp into the dispenser when not in use.

**Dispenser Configuration 3** - High discharge coaxial configuration with retractor and hose loop

1. The hose assembly may not exceed 13-1/2 feet in length.

2. The hose retractor shall fully retract the hose to the top of the dispenser when not in use. The tension on the retractor should not be in excess of that required to accomplish this.

3. The hose and retractor shall be installed so as to permit natural drainage from the retractor clamp into the dispenser when not in use.

**Dispenser Configuration 4** - Low profile coaxial configuration with retractor

1. The hose retractor shall fully retract the hose to the dispenser when not in use. The retractor clamp shall be positioned to avoid any bulge of hose between the clamp and the dispenser outlet swivel.

**Dispenser Configuration 5** - High retractor, low discharge coaxial configuration

1. Vapor return piping and vapor pump may be installed on the inside or the outside of the dispenser cabinet.

2. The hose retractor shall be positioned 5 to 7 feet above the island surface.

3. The hose retractor shall fully retract the hose when not in use. The tension on the retractor should not be in excess of that required to accomplish this.

4. The hose and retractor shall be installed so as to permit natural drainage from the retractor clamp into the dispenser when not in use.

**Executive Order G-70-118-AB**

**Figure 3A**

**Amoco V-1 Vapor recovery System Hose and Dispenser Configurations**

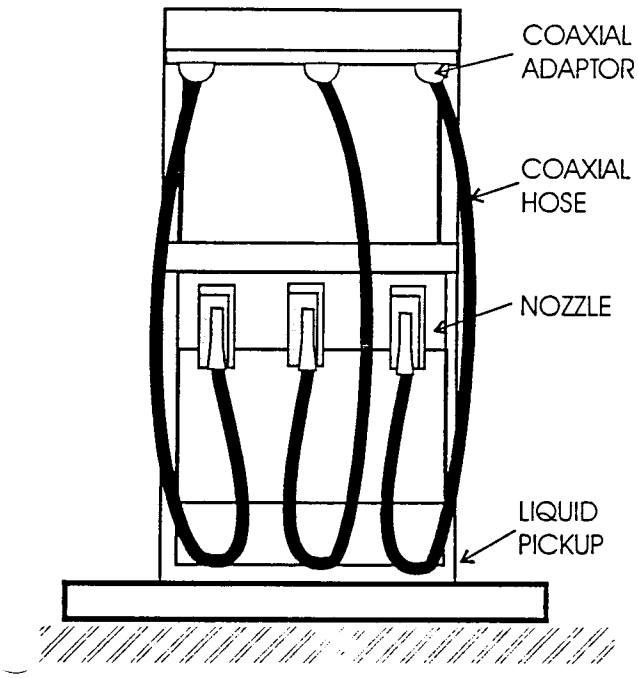


Dispenser Configuration 1

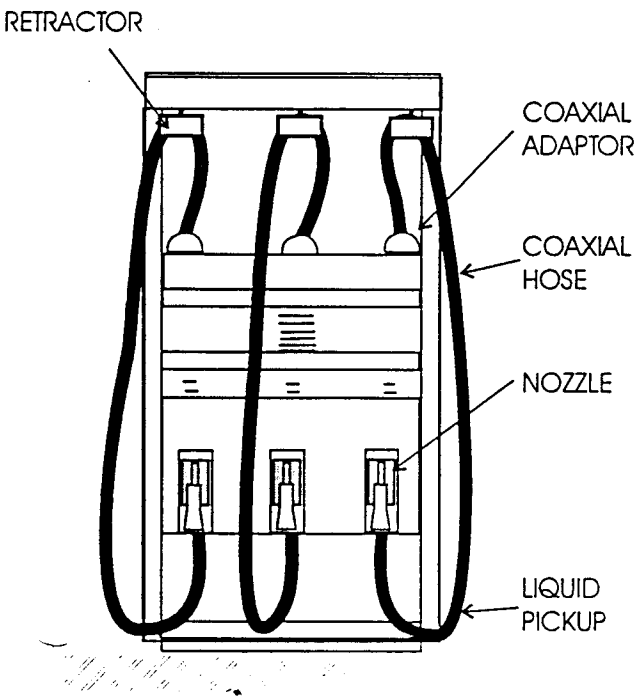


Dispenser Configuration 2

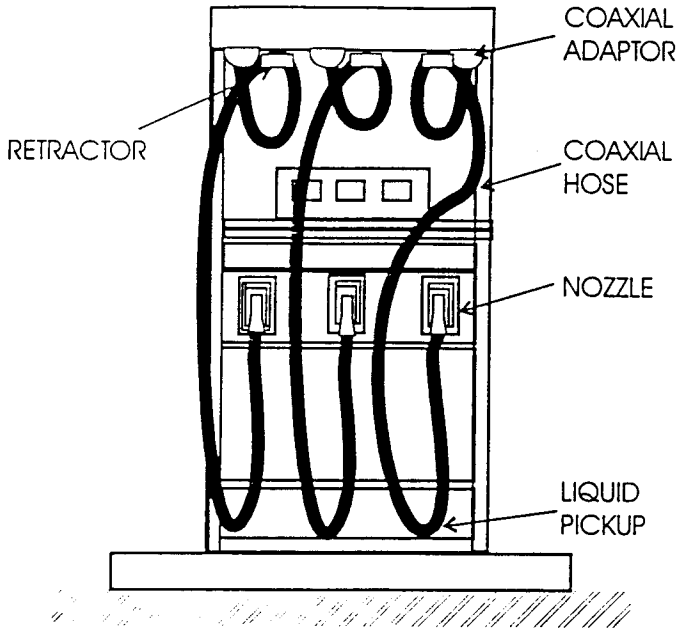


Dispenser Configuration 3

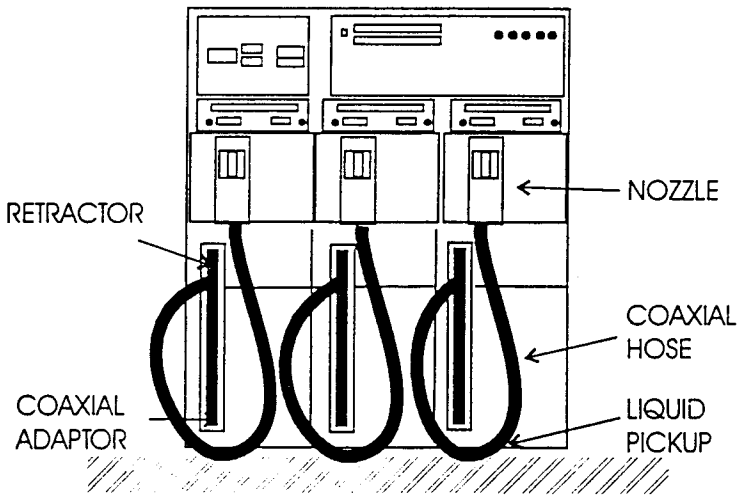


Dispenser Configuration 4

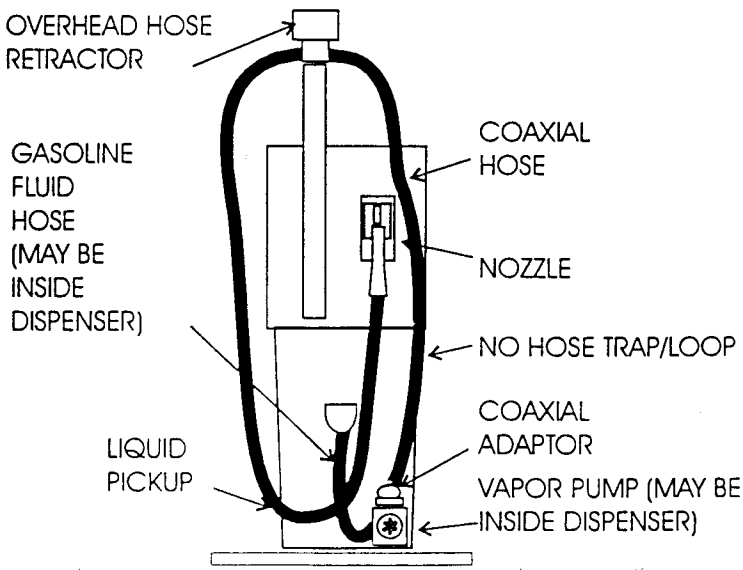

## Executive Order G-70-118-AB

Amoco V-1 Phase II Vapor Recovery System

### Exhibit 4

### STATIC PRESSURE INTEGRITY TEST UNDERGROUND STORAGE TANKS*

**1. Applicability**

**1.1** This test procedure is used to quantify the vapor tightness of vapor recovery systems installed at any gasoline dispensing facility (GDF) equipped with pressure/vacuum (P/V) valves with designed pressure settings specified in Exhibit 1 of this Order. Excessive leaks in the vapor recovery system will increase the quantity of fugitive hydrocarbon emissions and lower the overall efficiencies of both the Phase I and Phase II vapor recovery systems.

**2. Principle**

**2.1** The entire vapor recovery system is pressurized with nitrogen to two (2.0) inches $H_2O$. The system pressure is then allowed to decay and the pressure after five (5) minutes is compared with an allowable value. The minimum allowable five-minute final pressure is based on the system ullage and pressure decay equations. For the purpose of compliance determination, this test shall be conducted after all back-filling, paving, and installation of all Phase I and Phase II components, including P/V valves, has been completed.

**2.2** For GDF equipped with a coaxial Phase I system this test shall be conducted at a Phase II vapor riser. For GDF which utilize a two-point Phase I system this test may be conducted at either a Phase II riser or a Phase I vapor coupler, provided that the criteria set forth in Section 6.8 have been met. If the integrity criteria for two-point systems specified in Section 6.8 are met, it is recommended that this test be conducted at the Phase I vapor coupler.

**3. Range**

**3.1** If mechanical pressure gauges are employed, the full-scale range of the pressure gauges shall be 0-2.0, 0-1.0, and 0-0.50 inches $H_2O$ column. Maximum incremental graduations of the pressure gauge shall be 0.05 inches $H_2O$ and the minimum accuracy of the gauge shall be three percent of full scale. The minimum diameter of the pressure gauge face shall be 4 inches.

**3.2** If an electronic pressure measuring device is used, the full-scale range of the device shall not exceed 0-10 inches $H_2O$ with a minimum accuracy of 0.5 percent of full-scale. A 0-20 inches $H_2O$ device may be used, provided the equivalent accuracy is not less than 0.25 percent of full scale.

*Reference Bay Area Air Quality Management District Source Test Procedure ST-30

3.3 The minimum and maximum total ullages shall be 500 and 25,000 gallons, respectively. These values are exclusive of all vapor piping volumes.

3.4 The minimum and maximum nitrogen feed-rates, into the system, shall be one (1) and five (5) CFM, respectively.

## 4. Interferences

4.1 Introduction of nitrogen into the system at flowrates exceeding five (5) CFM may bias the results of the test toward non-compliance.

## 5. Apparatus

5.1 Nitrogen. Use commercial grade nitrogen in a high pressure cylinder, equipped with a two-stage pressure regulator and a one psig pressure relief valve.

5.2 Pressure Measuring Device. Use 0-2.0, 0-1.0, and 0-0.50 inches $H_2O$ pressure gauges connected in parallel, a 0-2 inches $H_2O$ manometer, or an electronic pressure measuring device to monitor the pressure decay in the vapor recovery system. The pressure measuring device shall, at a minimum, be readable to the 0.05 inches $H_2O$.

5.3 "T" Connector Assembly. See Figure 4-1 for example.

**Figure 4-1**

**"T" Connector Assembly**

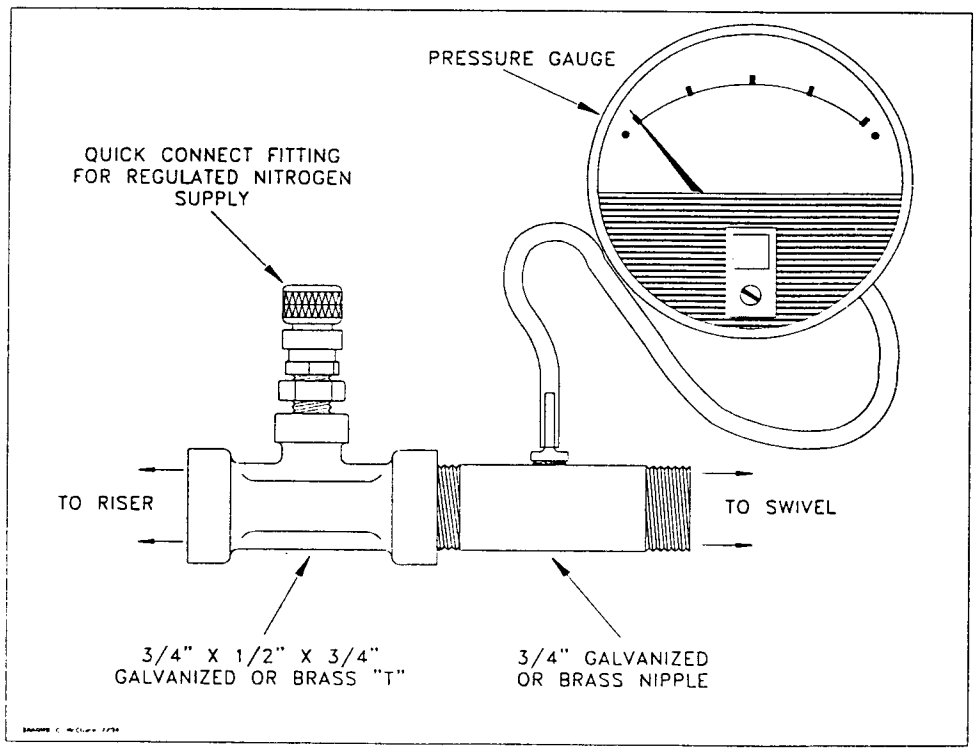

5.4 Vapor Coupler Integrity Assembly. Assemble OPW 633-A, 633-B, and 634-A adapters, or equivalent, as shown in Figure 4-2. If the test is to be conducted at the storage tank Phase I vapor coupler, this assembly shall be used prior to conducting the static leak test in order to verify the pressure integrity of the vapor poppet. The internal volume of this assembly shall not exceed 0.1 cubic feet.

**Figure 4-2**

**Vapor Coupler Integrity Assembly**

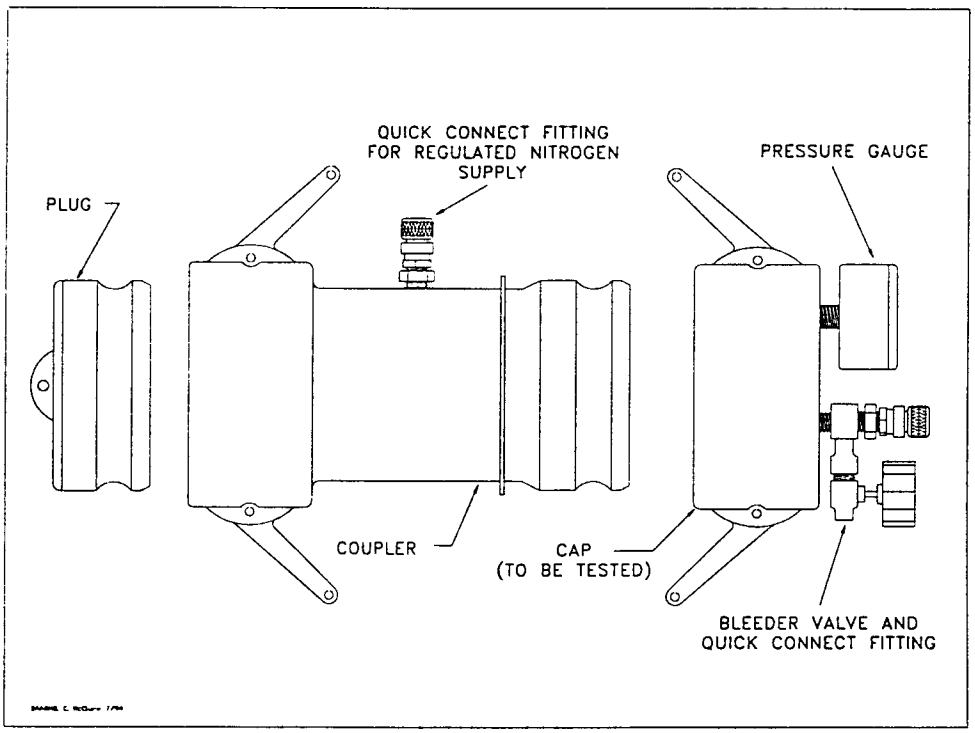


5.5 Vapor Coupler Test Assembly. Use a compatible OPW 634-B cap, or equivalent, equipped with a center probe to open the poppet, a pressure measuring device to monitor the pressure decay, and a connection for the introduction of nitrogen into the system. See Figure 4-3 for example.

5.6 Stopwatch. Use a stopwatch accurate to within 0.2 seconds.

5.7 Flowmeter. Use a Dwyer flowmeter, Model RMC-104, or equivalent, to determine the required pressure setting of the delivery pressure gauge on the nitrogen supply pressure regulator. This pressure shall be set such that the nitrogen flowrate is between 1.0 and 5.0 CFM.

5.8 Combustible Gas Detector. A Bacharach Instrument Company, Model 0023-7356, or equivalent, may be used to verify the pressure integrity of system components during this test.

5.9 Leak Detection Solution. Any liquid solution designed to detect vapor leaks may be used to verify the pressure integrity of system components during this test.

**Figure 4-3**

**Vapor Coupler Test Assembly**

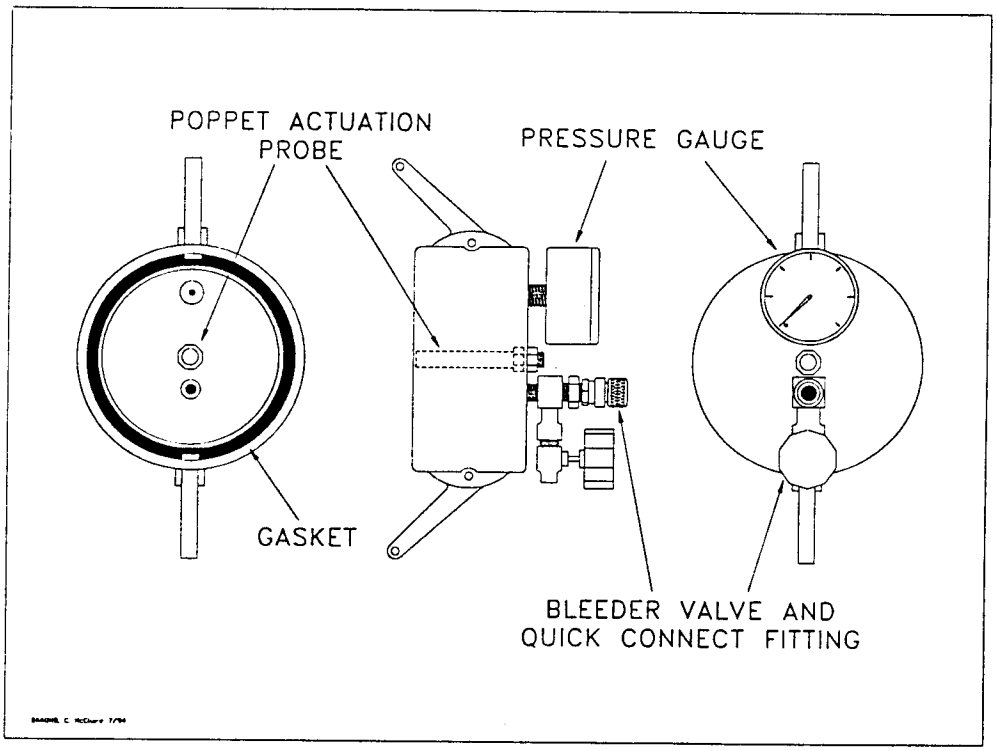


## 6. Pre-Test Procedures

6.1 The following safety precautions shall be followed:

6.1.1 Only nitrogen shall be used to pressurize the system.

6.1.2 A one psig relief valve shall be installed to prevent the possible over-pressurizing of the storage tank.

6.1.3 A ground strap should be employed during the introduction of nitrogen into the system.

6.2 Product dispensing shall not occur during the test. There shall have been no Phase I deliveries into or out of the storage tanks within the three hours prior to the test.

6.3 Measure the gallons of gasoline present in each underground storage tank and determine the actual capacity of each storage tank from facility records. Calculate the ullage space for each tank by subtracting the gasoline gallonage present from the actual tank capacity. The minimum ullage during the test shall be 25 percent of the tank capacity or 500 gallons, whichever is greater. The total ullage shall not exceed 25,000 gallons.

6.4 For two-point Phase I systems, this test shall be conducted with the dust cap removed from the vapor coupler. This is necessary to determine the vapor tightness of the Phase I vapor poppet. See Section 6.7 if this test is to be conducted at the Phase I vapor coupler.

6.4.1 For coaxial Phase I systems this test shall be conducted with the dust cap removed from the Phase I coupler. This is necessary to insure the vapor tightness of the Phase I vapor poppet.

6.4.2 Verify that the liquid level in the storage tank is at least four (4) inches above the highest opening at the bottom of the submerged drop tube.

6.5 If the Phase I containment box is equipped with a drain valve, the valve assembly may be cleaned and lubricated prior to the test. This test shall, however, be conducted with the drain valve installed and the manhole cover removed. See subsection 7.4.1 for further details regarding containment box drain valves.

6.6 If the test is to be conducted at a Phase II vapor riser, disconnect the dispenser end of one vapor recovery hose and install the "T" connector assembly (see Figure 4-1). Connect the nitrogen gas supply (do not use air) and the pressure measuring device to the "T" connector.

6.6.1 For those Phase II systems utilizing a dispenser mounted remote vapor check valve, the "T" connector assembly shall be installed on the vapor riser side of the check valve.

6.7 If this test is to be conducted at the Phase I vapor coupler on a two-point Phase I system, the procedures set forth in subsections 6.7.1 and 6.7.2 shall be successfully completed prior to testing. The static pressure integrity test shall not be conducted at the Phase I coupler at facilities equipped with coaxial Phase I systems.

6.7.1 Connect the Vapor Coupler Integrity Assembly to the Phase I vapor coupler. Connect the Vapor Coupler Test Assembly. Connect the nitrogen supply to the assembly and carefully pressurize the internal volume of the assembly to two (2.0) inches $H_2O$. Start the stopwatch. Record the final pressure after one minute.

6.7.2 If the pressure after one minute is less than 0.25 inches $H_2O$, the leak rate through the Phase I vapor poppet precludes conducting the static leak test at this location. If the pressure after one minute is greater than or equal to 0.25 inches $H_2O$, the static leak test may be conducted at this location. This criteria assures a maximum leak rate through the Phase I vapor poppet of less than 0.0004 cubic feet per minute.

6.7.3 Disconnect the Vapor Coupler Integrity Assembly from the Phase I vapor coupler. If the requirements of subsection 6.7.2 were met, install the Vapor Coupler Test Assembly to the Phase I vapor coupler.

**6.8** All pressure measuring device(s) shall be bench calibrated using either a reference gauge or incline manometer. Calibration shall be performed at 20, 50, and 80 percent of full scale. Accuracy shall be within two percent at each of these calibration points. Calibrations shall be conducted on a frequency not to exceed 90 days.

**6.9** Use the flowmeter to determine the nitrogen regulator delivery pressures which correspond to nitrogen flowrates of 1.0 and 5.0 CFM. These pressures define the allowable range of delivery pressures acceptable for this test procedure. Also record which regulator delivery pressure setting, and the corresponding nitrogen flowrate, will be used during the test. As an alternative, the flowmeter may be connected, in-line between the nitrogen supply regulator and Vapor Coupler Test Assembly, during the test.

**6.10** Use Equation 9.3 to calculate the approximate time required to pressurize the system ullage to the initial starting pressure of two (2.0) inches $H_2O$. This will allow the tester to minimize the quantity of nitrogen introduced into those systems which cannot comply with the static leak standards.

**6.11** Attach the Vapor Coupler Test assembly to the Phase I poppet or the "T" connector assembly to the Phase II vapor riser. Read the initial pressure of the storage tank and underground piping. If the initial pressure is greater than 0.5 inches $H_2O$, carefully bleed off the pressure, in accordance with all applicable safety procedures, in the storage tank and underground piping to less than 0.5 inches $H_2O$ column.

## 7. Testing

**7.1** Open the nitrogen gas supply valve and set the regulator delivery pressure within the allowable range determined in Section 6.9, and start the stopwatch. Pressurize the vapor system (or subsystem for individual vapor return line systems) to **at least 2.2 inches $H_2O$** initial pressure. It is critical to maintain the nitrogen flow until the pressure stabilizes, indicating temperature and vapor pressure stabilization in the tanks. Check the test equipment using leak detecting solution or a combustible gas detector to verify that all test equipment is leak tight.

7.1.1 If the time required to achieve the initial pressure of two (2.0) inches $H_2O$ exceeds twice the time derived from Equation 9.3, stop the test and use liquid leak detector, or a combustible gas detector, to find the leak(s) in the system. Failure to achieve the initial starting pressure within twice the time derived from Equation 9.3 demonstrates the inability of the system to meet the performance criteria. Repair or replace the faulty component(s) and restart the test pursuant to Section 7.1.

7.2 Close and disconnect the nitrogen supply. Start the stopwatch when the pressure has decreased to the initial starting pressure of two (2.0) inch $H_2O$.

7.3 At one-minute intervals during the test, record the system pressure. After five minutes, record the final system pressure. See Table 4-I (or Equation 9.1) to determine the acceptability of the final system static pressure results. For intermediate values of ullage in Tables 4-I, linear interpolation may be employed.

7.4 If the system failed to meet the criteria set forth in Table 4-I (or the appropriate equation in Section 9), repressurize the system and check all accessible vapor connections using leak detector solution or a combustible gas detector. If vapor leaks in the system are encountered, repair or replace the defective component and repeat the test. Potential sources of leaks include nozzle check valves, pressure/vacuum relief valves, containment box drain valve assemblies, and plumbing connections at the risers.

7.4.1 If the facility fails to comply with the static leak test standards and the Phase I system utilizes a non-CARB-certified drain valve equipped containment box, which was installed prior to July 1, 1992, for which a CARB-certified replacement drain valve assembly is not marketed, the following two subsections shall apply:

7.4.1.1 The drain valve may be removed and the port plugged. Reset the system. If the facility complies with the static leak test standards under these conditions, the facility shall be considered complying with the requirements, provided that the manufacturer and model number of the containment box and the date of installation are submitted with the test results.

7.4.1.2 The criteria set forth in subsection 7.4.1.1 shall not apply after July 1, 1996.

7.5 After the remaining system pressure has been relieved, remove the "T" connector assembly and reconnect the vapor recovery hose, if applicable.

7.6 If the vapor recovery system utilizes individual vapor return lines, repeat the leak test for each gasoline grade. Avoid leaving any vapor return line open longer than is necessary to install or remove the "T" connector assembly.

7.7 If the applicable CARB Executive requires the test to be conducted with and without the containment box cover in place, repeat the test with the cover in place. In these cases clearly specify, on Form 4-1, which results represent the pressure integrity with and without the cover in place.

## 8. Post-Test Procedures

8.1 Use Table 4-I or, or Equations 9.1, to determine the compliance status of the facility by comparing the final five-minute pressure with the minimum allowable final pressure.

## 9. Calculations

9.1 The minimum allowable five-minute final pressure, with an initial pressure of two (2.0) inches $H_2O$, shall be calculated as follows:

[Equation 9-1]

$$P_f = 2e^{\frac{-500.887}{V}} \quad \text{if } N = 1\text{-}6$$

$$P_f = 2e^{\frac{-531.614}{V}} \quad \text{if } N = 7\text{-}12$$

$$P_f = 2e^{\frac{-562.455}{V}} \quad \text{if } N = 13\text{-}18$$

$$P_f = 2e^{\frac{-593.412}{V}} \quad \text{if } N = 19\text{-}24$$

$$P_f = 2e^{\frac{-624.483}{V}} \quad \text{if } N > 24$$

Where:

N = The number of affected nozzles. For manifolded systems, N equals the total number of nozzles. For dedicated plumbing configurations, N equals the number of nozzles serviced by the tank being tested.

$P_f$ = The minimum allowable five-minute final pressure, inches $H_2O$

e = A dimensionless constant approximately equal to 2.718

2 = The initial starting pressure, inches $H_2O$

**9.2** The minimum time required to pressure the system ullage from zero (0) to two (2.0) inches $H_2O$ gauge pressure shall be calculated as follows:

$$t_2 = \frac{V}{[1522]F} \qquad \text{[Equation 9-2]}$$

Where:

| | | |
|---|---|---|
| $t_2$ | = | The minimum time to pressurize the ullage to two inches $H_2O$, minutes |
| V | = | The total ullage affected by the test, gallons |
| F | = | The nitrogen flowrate into the system, CFM |
| 1522 | = | The conversion factor for pressure and gallons |

**9.3** If the policy of the local district requires an allowable tolerance for testing error, the minimum allowable five-minute final pressure, including testing error, shall be calculated as follows:

$$P_{f\text{-}E} = 2 - \left[1 + \left(\frac{E}{100}\right)\right]\left[408.9 - \left(P_f + 406.9\right)\right] \qquad \text{[Equation 9-3]}$$

Where:

| | | |
|---|---|---|
| $P_{f\text{-}E}$ | = | The minimum allowable five-minute final pressure including allowable testing error, inches $H_2O$ |
| E | = | The allowable testing error, percent |
| $P_f$ | = | The minimum allowable five-minute final pressure calculated in Equations 9-1 or 9-2, inches $H_2O$ |
| 2 | = | The initial starting pressure, inches $H_2O$ |
| 408.9 | = | Atmospheric pressure plus the initial starting pressure, inches $H_2O$ |
| 406.9 | = | Atmospheric pressure, inches $H_2O$ |

## 10. Reporting

**10.1** The calculated ullage and system pressures for each five-minute vapor recovery system test shall be reported as shown in Form 4-1. Be sure to include the Phase I system type (two-point or coaxial), the Phase II system type, whether the system is manifolded, and the one-minute pressures during the test.