State of California
AIR RESOURCES BOARD

Executive Order G-70-125-AA

Modification to the Certification of the
Phase II Balance Vapor Recovery Nozzles

WHEREAS, the Air Resources Board (the "Board") has established, pursuant to Sections 39600, 39601 and 41954 of the Health and Safety Code, certification procedures for systems designed for the control of gasoline vapor emissions during motor vehicle fueling operations ("Phase II vapor recovery systems") in its "Certification Procedures for Gasoline Vapor Recovery Systems at Service Stations" as last amended December 4, 1981 (the "Certification Procedures"), incorporated by reference in Section 94001 of Title 17, California Code of Regulations;

WHEREAS, the Board has established, pursuant to Sections 39600, 39601 and 41954 of the Health and Safety Code, test procedures for determining the compliance of Phase II vapor recovery systems with emission standards in its "Test Procedures for Determining the Efficiency of Gasoline Vapor Recovery Systems at Service Stations" as last amended September 1, 1982 (the "Test Procedures"), incorporated by reference in Section 94000 of Title 17, California Code of Regulations;

WHEREAS, Executive Order G-70-125, issued June 7, 1990, certified the Husky Model V vapor recovery nozzle to be at least 95 percent effective when installed on Board-certified balance Phase II vapor recovery systems;

WHEREAS, Husky Corporation (hereinafter referred to as "Husky") has requested modification of the certification to include, as an option on the Husky Model V nozzle, the LX liquid removal system;

WHEREAS, I find that the Husky Model V and V-LX vapor recovery nozzles, when used with balance Phase II vapor recovery systems at new and existing installations, conform with all the requirements set forth in Sections I through VII of the Certification Procedures, and result in vapor recovery systems that are at least 95 percent effective for attendant and/or self-serve use at gasoline service service stations when used in conjuction with Phase I vapor recovery systems that have been certified by the Board;

WHEREAS, I find that coaxial vapor recovery hoses when used with balance Phase II vapor recovery systems result in an improvemenmt to the performance of the systems; and

WHEREAS, Section VIII-A of the Certification Procedures provides that the Executive Officer shall issue an order of certification if he or she determines that the vapor recovery system conforms to all of the requirements set forth in Sections I through VII of the Certification Procedures.

NOW THEREFORE, IT IS HEREBY ORDERED that the Husky Model V and V-LX coaxial vapor recovery nozzles are hereby certified for use with balance Phase II vapor recovery systems. A list of the certified Phase II systems can be found in Exhibit 1 of the latest revision of Executive Order G-70-52.

IT IS FURTHER ORDERED where Husky balance-type vapor recovery nozzles are to be installed at a new installation only the balance type coaxial vapor recovery nozzles and coaxial hose configurations may be used. For existing balance type dual hose systems, the the coaxial Husky Model V nozzle may be used with a certified adaptor. The Husky Model V-LX nozzle shall be installed only with coaxial vapor recovery hose configurations.

IT IS FURTHER ORDERED that the Husky Model V-LX liquid removal system shall be installed as specified in Exhibit 1, must be in compliance with the requirements in, and may be used only on the configurations specified in, the current revision of Executive Order G-70-52.

IT IS FURTHER ORDERED that the maximum dispensing rate shall be ten gallons per minute unless otherwise specified in the latest revision of Executive Order G-70-52;

IT IS FURTHER ORDERED that Husky Model V vapor recovery nozzles must be capable of fueling, without the use of nozzle spout extenders, any motor vehicle that may be fueled at service stations not equipped with vapor recovery systems.

IT IS FURTHER ORDERED that compliance with the certification requirements and rules and regulations of the Division of Measurement Standards of the Department of Food and Agriculture, the State Fire Marshal's Office, and the Division of Occupational Safety and Health of the Department of Industrial Relations is made a condition of this certification.

IT IS FURTHER ORDERED that the nozzles certified hereby shall perform in actual use with the same effectiveness as the certification test nozzles. Compliance with this performance criterion shall be a condition of this certification, and failure to meet this criterion shall constitute grounds for revocation, suspension or modification of this certification.

IT IS FURTHER ORDERED that any alteration of the equipment, parts, design, or operation of the nozzles certified hereby, is prohibited, and deemed inconsistent with this certification, unless such alteration has been approved by the Executive Officer or his/her designee.

IT IS FURTHER ORDERED that the certified Phase II vapor recovery nozzles shall, at a minimum, be operated in accordance with the manufacturer's recommended maintenance intervals and shall use the manufacturer's recommended operation, installation, and maintenance procedures.

IT IS FURTHER ORDERED that the Husky Model V and V-LX vapor recovery nozzles specified in this Executive Order shall be 100 percent performance checked at the factory including checks of proper functioning of all automatic shut-off mechanisms.

Executed at Sacramento, California this 16 day of MARCH, 1993.

Jan Cachette for

James D. Boyd
Executive Officer

Executive Order G-70-125-AA
Husky Balance Phase II Nozzles

Exhibit 1
Model V-LX Liquid Removal System
Location of Slurpie Pickup Tube

The liquid removal system is driven by the fuel dispensed and is effective when the tip of the "slurpie pickup tube" is located in the lowest part of the hose, where any accumulated liquid will collect, during dispensing. Therefore, the slurpie pickup tube shall be installed so that the tip is in the lowest part of the hose loop when the nozzle is latched into the fillpipe of a vehicle parked approximately four feet from the dispenser face which has a fillpipe opening approximately thirty inches above the ground. The ideal location is two inches closer to the dispenser than the center of the lowest part of the hose loop.
Note: in many but not all cases, the lowest point of the hose loop will also be the lowest point of the hose loop when the nozzle is hung up on the dispenser.
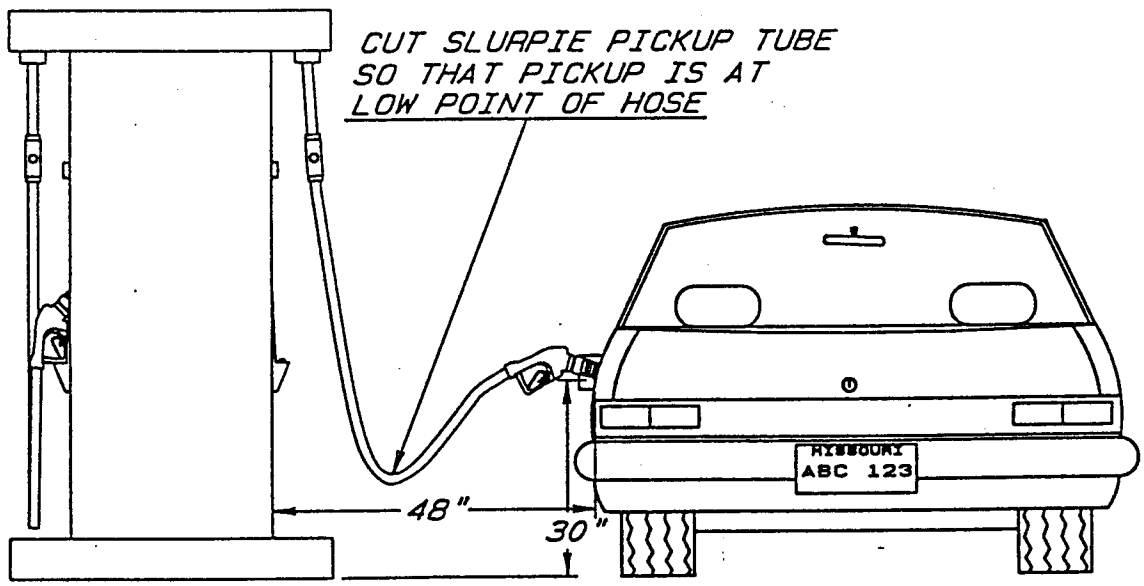
The tip of the slurpie pickup tube is magnetized to facilitate detection of location by deflection of a compass needle.