State of California
AIR RESOURCES BOARD

Executive Order G-70-139

Addition to the
Certification of the Hirt Model VCS-200
Phase II Vapor Recovery System

WHEREAS, the Air Resources Board (the "Board") has established, pursuant to Sections 39600, 39601, and 41954 of the Health and Safety Code, certification procedures for systems designed for the control of gasoline vapor emissions displaced during the filling of storage tanks at service stations ("Phase I vapor recovery systems") and for the control of gasoline vapor emissions from motor vehicle fueling operations ("Phase II vapor recovery systems") in its "Certification Procedures for Gasoline Vapor Recovery Systems at Service Stations" as last amended December 4, 1981 (the "Certification Procedures"), incorporated by reference in Section 94001 of Title 17, California Code of Regulations;

WHEREAS, the Board has established, pursuant to Sections 39600, 39601, and 41954 of the Health and Safety Code, test procedures for determining compliance of Phase I and Phase II vapor recovery systems with emission standards in its "Test Procedures for Determining the Efficiency of Gasoline Vapor Recovery Systems at Service Stations" as last amended September 1, 1982 (the "Test Procedures"), incorporated by reference in Section 94000 of Title 17, California Code of Regulations;

WHEREAS, Hirt Combustion Engineers, Incorporated, has applied for certification of their Model VCS-200 Phase II vapor recovery system for use on gasoline dispensing facilities utilizing an aboveground gasoline storage tank system;

WHEREAS, Section VIII-A of the Certification Procedures provides that the Executive Officer shall issue an order of certification if he or she determines that a vapor recovery system conforms to all of the requirements set forth in Sections I through VII; and

WHEREAS, The Executive Order G-70-33 series contains the certification orders for Hirt vacuum assist Phase II vapor recovery systems, and the Executive Order G-70-52 series includes the certification orders for components used in Hirt vacuum assist Phase II vapor recovery systems;

WHEREAS, I find that the Hirt Model VCS-200 Phase II vapor recovery system, when either integrated with an ARB certified Phase I vapor recovery system or operated as a separate and individual vapor recovery system conforms with all the requirements set forth in Sections I through VII of the Certification Procedures;

NOW, THEREFORE, IT IS HEREBY ORDERED that the aboveground tank configurations shown in Exhibits 1.1, 1.2 and 1.3 with requisite specifications, hereto, are hereby certified when used with Hirt vacuum assist Phase II vapor recovery systems, and components for such systems, covered by a current certification in the Executive Order G-70-33 series and the G-70-52 series. The aboveground tank Phase II vapor recovery systems identified in this Executive Order are certified to be at least 95 percent effective when either integrated with ARB certified Phase I vapor recovery systems or operated as separate and individual vapor recovery systems.

IT IS FURTHER ORDERED that compliance with the rules and regulations of the local air pollution control district with jurisdiction where the installed system is located, shall be made a condition of this certification.

IT IS FURTHER ORDERED that the tank(s) and associated piping and other equipment not specifically listed as approved Phase II equipment in Executive Order G-70-33 and G-70-52 series shall comply with the rules and regulations of the local fire officials with jurisdiction where the installed system is located.

IT IS FURTHER ORDERED that compliance with all applicable certification requirements and rules and regulations of the Division of Measurement Standards, the Office of the State Fire Marshal, and the Division of Occupational Safety and Health of the Department of Industrial Relations shall be made a condition of this certification.

IT IS FURTHER ORDERED that the certified Phase II vapor recovery systems shall, at a minimum, be maintained in accordance with the maintenance schedule shown in Exhibit 2 attached. These minimum maintenance requirements shall be included in the Permit to Operate issued by the district in which the system is installed.

IT IS FURTHER ORDERED that any alteration of the equipment, parts, design, or operation of the configurations certified hereby, is prohibited, and deemed inconsistent with this certification, unless such alteration has been approved by the undersigned or the Executive Officer's designee.

Executed this 17 day of March 1992, at Sacramento, California.

James D. Boyd
Executive Officer

Exhibit 1.1

Hirt VCS-200 System in "Integrated" Configuration

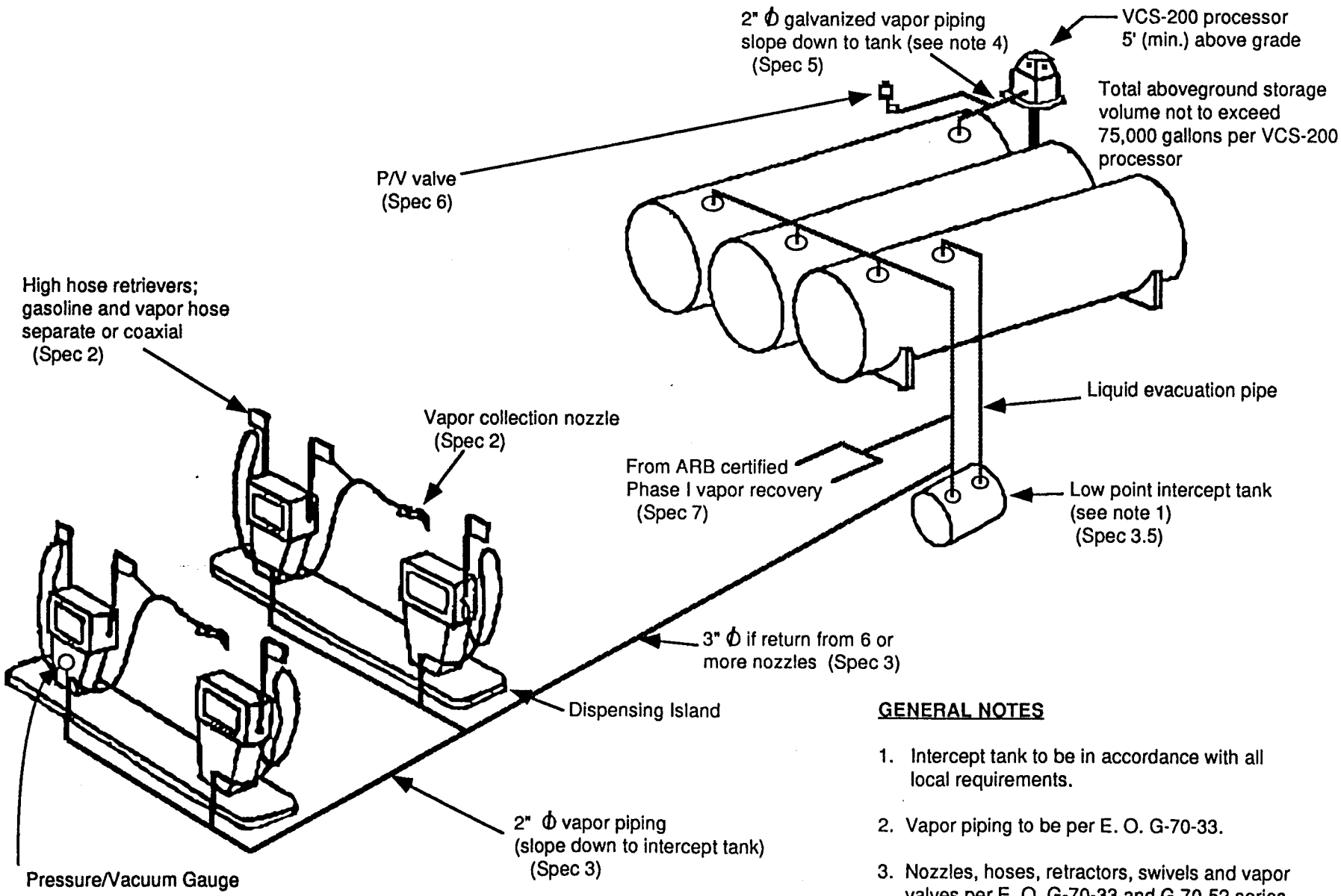

GENERAL NOTES

1. Intercept tank to be in accordance with all local requirements.
2. Vapor piping to be per E. O. G-70-33.
3. Nozzles, hoses, retractors, swivels and vapor valves per E. O. G-70-33 and G-70-52 series.
4. See Exhibit 1.2 for alternative vapor piping configurations.

Exhibit 1.2

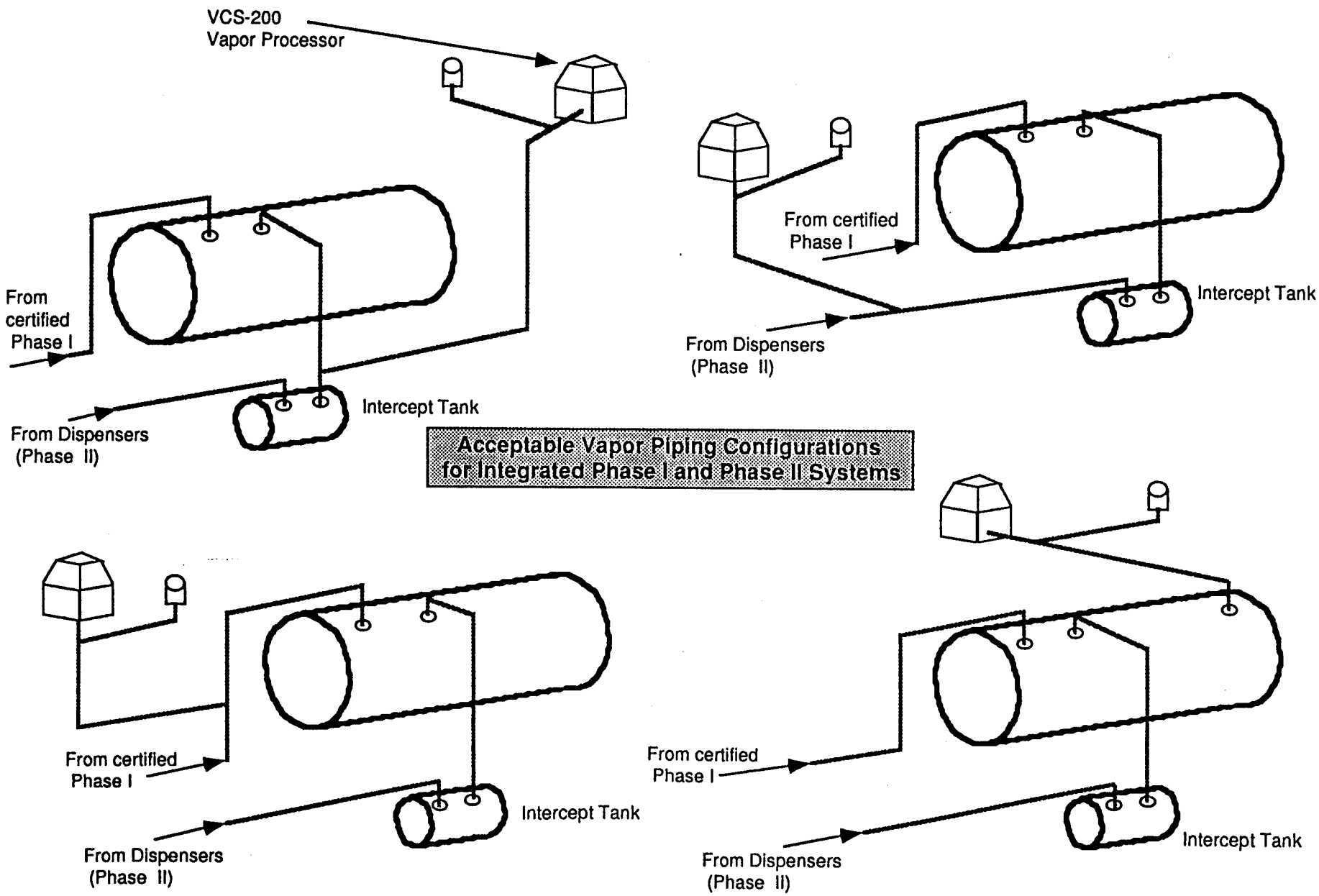
VCS-200
Vapor Processor
From
certified
Phase I
From Dispensers
(Phase II)
Intercept Tank
From certified
Phase I
From Dispensers
(Phase II)
Intercept Tank
Acceptable Vapor Piping Configurations
for Integrated Phase I and Phase II Systems
From certified
Phase I
From Dispensers
(Phase II)
Intercept Tank
From certified
Phase I
From Dispensers
(Phase II)
Intercept Tank

Specifications for Hirt Model VCS-200 Vapor Recovery Systems
For Application on Facilities Utilizing Aboveground Storage Tanks
with Integrated Phase I and Phase II Vapor Recovery Systems.

1. General

   1.1 The system shall be piped so that the VCS-200 processor has direct access to the aboveground storage tank free space.

   1.2 The system shall be piped so that except for the vapor valve, there is no obstruction, trap, pump, turbine, aspirator, or ejector between the vapor collecting nozzles and the aboveground storage tank free space.

2. Vapor collecting nozzles, hoses, and vapor check valves shall be per ARB Executive Orders G-70-33 and G-70-52 series.

3. Vapor Return Piping

   3.1 Purpose: To interconnect the vapor conduit of the vapor collecting nozzles to the free space of in the storage tanks.

   3.2 Components: Nozzles, swivels, hoses, hose retractors, vapor check valves, vapor piping internal to dispenser, and vapor piping connections to main vapor return line per ARB Executive Orders G-70-33 and G-70-52 series.

   3.3 Main vapor return line shall be 2" I.D. (minimum) if returning vapors from 6 or fewer nozzles which can be dispensing simultaneously. Main vapor return line shall be 3" I.D. (minimum) if returning vapors from more than 6 nozzles. If underground, vapor return line may be fiberglass; if above ground, galvanized steel.

   3.4 Except for the vapor check valve, there shall be no obstruction, no trap, or no active components in this vapor return piping.

   3.5 The main vapor return line shall slope steadily downward (minimum of 1/4 " per ft.) to a low point at a storage tank. If this low point can not be a gasoline storage tank, it shall be a low point condensate interceptor tank. The interceptor tank shall comply with local requirements.

4. Aboveground Storage Tank Manifold

   4.1 Purpose: To interconnect the free space in all aboveground gasoline storage tanks, and thus equalize system pressure.

   4.2 Size and type: The piping which manifolds the free space of aboveground storage tanks shall be 2" I.D. (minimum). The piping shall be of galvanized steel.

   4.3 Note: Although it is not part of the vapor control system, it is wise to install a float ball check valve at the connection of this manifold to the storage tanks so that an overfill does not cross contaminate stored gasoline products.

5. Vapor Processing Piping

5.1 Purpose: To interconnect the storage tank free space and vapor processor.

5.2 Size and type: This piping shall be 2" I.D. (minimum). It shall be of galvanized steel with no internal restrictions and no obstructions to the free flow of vapors. It may reduce to 1" I.D. for not more than 1 ft. at the connection to the processor.

5.3 Alternative connection points: In order to connect to the free space of the aboveground gasoline storage tank(s), the vapor processing piping may enter (exit) from either of the following points.

5.3.1 A fitting directly on the top of a gasoline storage tank.

5.3.2 A fitting in the low point condensate interceptor tank.

5.3.3 A tee into the phase II vapor return piping.

5.3.4 A tee into the phase I vapor return piping.

5.4 Slope and drain: The piping shall slope steadily downward from the processor to a gasoline storage tank.

5.4.1 If it can not slope downward to a storage tank, the low point shall be a condensate interceptor tank. It may be the same tank, or drain to the same tank specified in 3.5.

5.5 Because the processor is an active vacuum generating devise, any restrictions in the piping can cause the processor to cycle rapidly.

6. Pressure/Vacuum relief valve.

6.1 Pressure/Vacuum relief valves (PV valve) shall be per ARB Executive Orders G-70-33 and G-70-52 series.

6.2 It shall be connected to the vapor recovery piping at a point no farther than 12" from the vapor processor.

7. Phase I vapor recovery system shall be per ARB phase I requirements.

8. Processor

8.1 The volume of aboveground gasoline tank storage space shall not exceed 75,000 gallons per VCS-200 processor.

8.2 Install a minimum of 5 ft. above grade.

Exhibit 1.3

Hirt VCS-200 System in "Vapor Direct to Process" Configuration

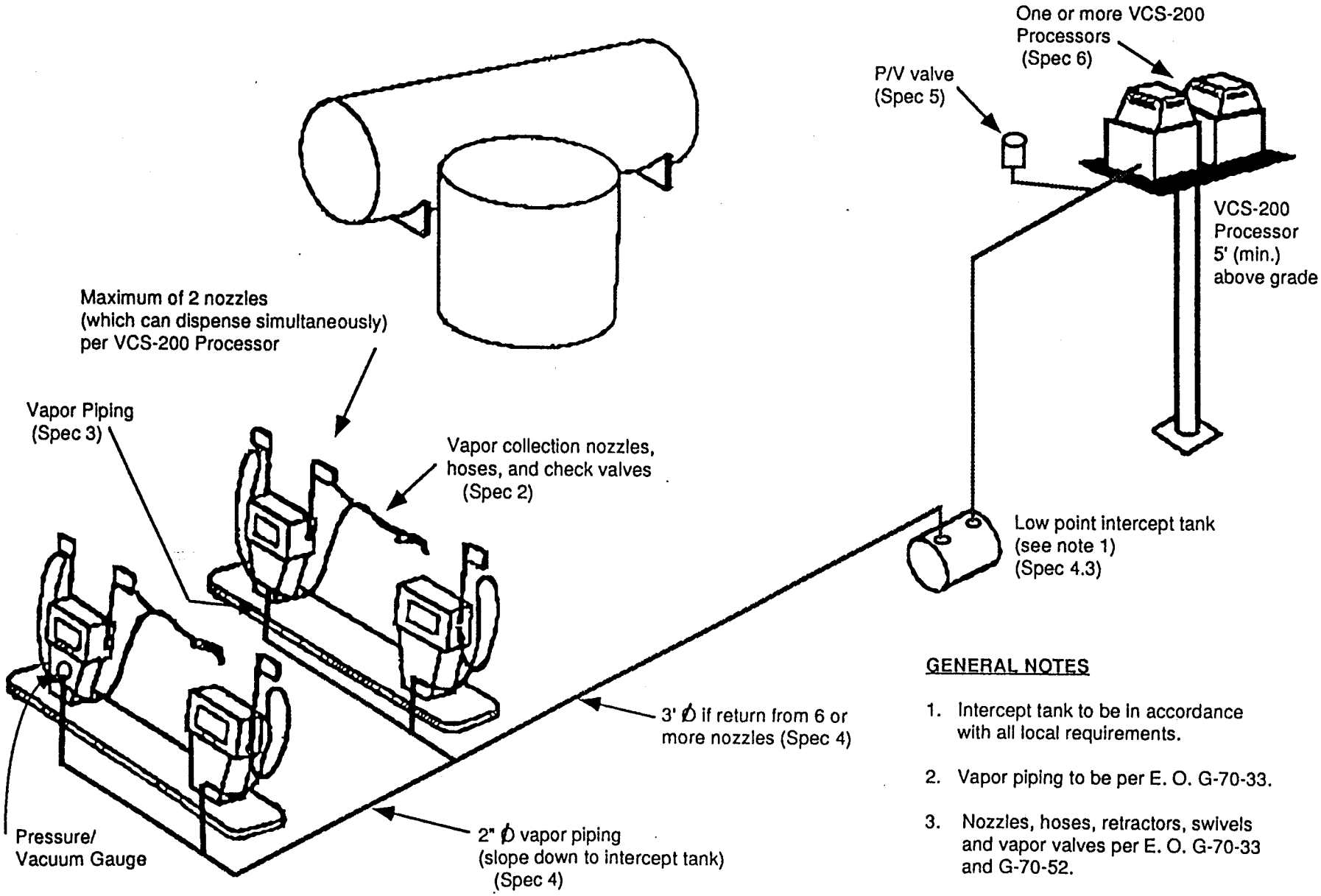

GENERAL NOTES

1. Intercept tank to be in accordance with all local requirements.
2. Vapor piping to be per E. O. G-70-33.
3. Nozzles, hoses, retractors, swivels and vapor valves per E. O. G-70-33 and G-70-52.

Specifications for Hirt Model VCS-200 Vapor Recovery Systems
For Application on Facilities Utilizing Aboveground Storage Tanks
with Non-Integrated Phase I and Phase II Vapor Recovery Systems.

1. General

   1.1 The system shall be piped so that the VCS-200 processor has direct access to the vapor collecting nozzles.

   1.2 The system shall be piped so that except for the vapor check valve, there is no obstruction, trap, pump, turbine, aspirator, or ejector between the vapor collecting nozzles and the vapor processor.

2. Vapor collecting nozzles, hoses, and vapor check valves shall be per ARB Executive Orders G-70-33 and G-70-52 series.

3. Vapor Recovery Piping

   3.1 Purpose: To interconnect the vapor conduit of the vapor collecting nozzles to the main vapor recovery line

   3.2 Components: Nozzles, swivels, hoses, hose retractors, vapor check valves, vapor piping internal to dispenser, and vapor piping connections to main vapor recovery line per ARB Executive Orders G-70-33 and G-70-52 series.

   3.3 Except for the vapor check valves, there shall be no obstruction, no trap, or no active components in this vapor recovery piping.

4. Main Vapor Recovery Line

   4.1 Size and type: Main vapor recovery line shall be 2" I.D. (minimum) if recovering vapors from 6 or fewer nozzles which can be dispensing simultaneously. Main vapor recovery line shall be 3" I.D. (minimum) if recovering vapors from more than 6 nozzles. If underground, vapor recovery line may be of fiberglass; if above ground, it shall be of galvanized steel.

   4.2 The main vapor recovery line shall have no internal restrictions and no obstructions to the free flow of vapors. It may reduce to 1" I.D. for not more than 1 ft. at the connection to the processor.

   4.3 The main vapor recovery line, coming from the dispensing pumps and the processor, shall slope steadily downward (minimum of 1/4 " per ft.) to a low point condensate interceptor tank. The interceptor tank shall comply with local requirements.

   4.4 Because the processor is an active vacuum generating devise, any restrictions in the vapor recovery line can cause the processor to cycle rapidly.

5. Pressure/Vaccum relief valve.

   5.1 Pressure/Vacuum relief valves (PV valve) shall be per ARB Executive Orders G-70-33 and G-70-52 series.

Exhibit 2

Executive Order G-70-139

Minimum Maintenance Requirements for the
Hirt VCS-200 Phase II Vapor Recovery System

1. The owner/operator shall check and replace any defective nozzle bellows and/or vapor recovery hoses on a weekly basis.

2. The owner/operator shall demonstrate once in any twelve month period the vapor recovery system's capacity to clear a liquid blockage. 100 milliliters of gasoline shall be introduced to the dispensing nozzle's vapor return line (through the bellows) and 10 gallons of gasoline shall then be dispensed from the nozzle. No more than 2 milliliters of liquid gasoline shall drain from the nozzle boot after dispensing.

3. The owner/operator shall demonstrate at least once in any twelve month period, and upon any modifications, repairs, or adjustments made therein, that the storage tank(s), the remote and/or nozzle vapor recovery check valves, associated vapor return piping and fittings are free from vapor leaks. At a minimum, the system should be able to maintain a positive pressure of 2.5 inches of water column for approximately 20 minutes when pressurized with nitrogen and while the Hirt system is turned off and phase I and II loading is suspended.

4. At least once in any twelve month period, the owner/operator shall conduct the following maintenance:

a. Check the vacuum turbine's ability to evacuate the vapor recovery system and maintain proper vacuum. While preparing to dispense fuel to motor vehicles (pump energized, but no dispensing), the system shall achieve a vacuum of at least 0.4 inches of water column. Otherwise, the system shall maintain a vacuum of at least 0.1 inches of water column. The system vacuum shall be verified at the dispensing pump which has the longest vapor path to the thermal oxidizer. This dispensing pump shall be fitted with a permanent pressure gauge in order to verify system vacuum. If needed, the owner/operator shall calibrate the Hirt pressure switches in accordance with Hirt instructions to meet the above specifications.

b. Check pilot light and main burner for proper operation. Upon activation of the vacuum turbine, the pilot solenoid should open and allow raw vapors to exit through the pilot light. Simultaneously, the ignitor module should cause an electric spark to be arched near the pilot light head and ignite the pilot flame. Thereafter, the electric spark should stop and the burner solenoid should open and allow vapors to exit through the burner where they are combusted. After the burner flame is ignited, a thermal switch should close the pilot solenoid and thereby extinguish the pilot flame. The pilot flame should ignite within one to five seconds. (Ignition is readily noted by the termination of the audible "clicking" sound of the

electronic ignitor and observation of the pilot flame itself). Delayed ignition or burner cycling on and off indicates needed adjustment or system maintenance.

5. If the facility dispenses an average of 20,000 gallons or more of gasoline per month, the owner/operator shall replace or rebuild the turbine five years or less after installation, or when repairs are needed to maintain performance equal to that achieved by the system during the certification test. If the facility dispenses an average of less than 20,000 gallons of gasoline per month, the owner or operator shall replace or rebuild the turbine ten years or less after installation, or when repairs are needed. Turbines shall be replaced or rebuilt in accordance with Hirt instructions.

6. The owner/operator shall record and maintain records of all system maintenance for a minimum of two years and shall make such records available to the District, ARB, or EPA inspectors upon demand.