State of California

AIR RESOURCES BOARD

EXECUTIVE ORDER G-70-20

Related to the Certification of the Texaco Phase I
Vapor Recovery System for Underground Storage Tanks at
Gasoline Service Stations

Pursuant to the authority vested in the Air Resources Board by Health and Safety Code Section 41954; and

Pursuant to the authority vested in the undersigned by Health and Safety Code Sections 39515 and 39516.

IT IS ORDERED AND RESOLVED: That, except as provided below, the certification of the Texaco Phase I vapor recovery system as shown in Exhibit 1, is hereby certified for use on underground gasoline storage tanks at service stations.

IT IS FURTHER ORDERED AND RESOLVED: That the use of pressure-vacuum valve shall require the prior approval of the local fire chief, and that the tanks and piping shall comply with the appropriate General Industry Safety Orders and in particular the provisions in Articles 144, 145, and 146 thereof.

IT IS FURTHER ORDERED AND RESOLVED: That compliance with the applicable certification requirements and rules and regulations of the Division of Measurement Standards, the State Fire Marshal's Office, and the Division of Industrial Safety is made a condition of this certification.

IT IS FURTHER ORDERED AND RESOLVED: That, any underground storage tank equipped with this system and filled by a gasoline delivery tank equipped with pressure-differential activated vapor-return vent valves must have a pressure-vacuum relief valve on the vent of the underground storage tank;

IT IS FURTHER ORDERED AND RESOLVED: That the system certified hereby shall perform in actual use with the same effectiveness as the certification test system. Compliance with this performance criterion shall be a condition of this certification, and if not met, shall constitute grounds for revocation, suspension or modification of this certification.

IT IS FURTHER ORDERED AND RESOLVED: That any alteration in the equipment parts, design, or operation of the system certified hereby is prohibited and deemed inconsistent with this certification unless the alteration has been approved by the undersigned.

Executed at Sacramento, California this 21st day of August 1978.

for Thomas C Austin
William H. Lewis, Jr
Executive Officer

Exhibit 1

Executive Order G-70-20
Texaco Phase I Vapor Recovery System

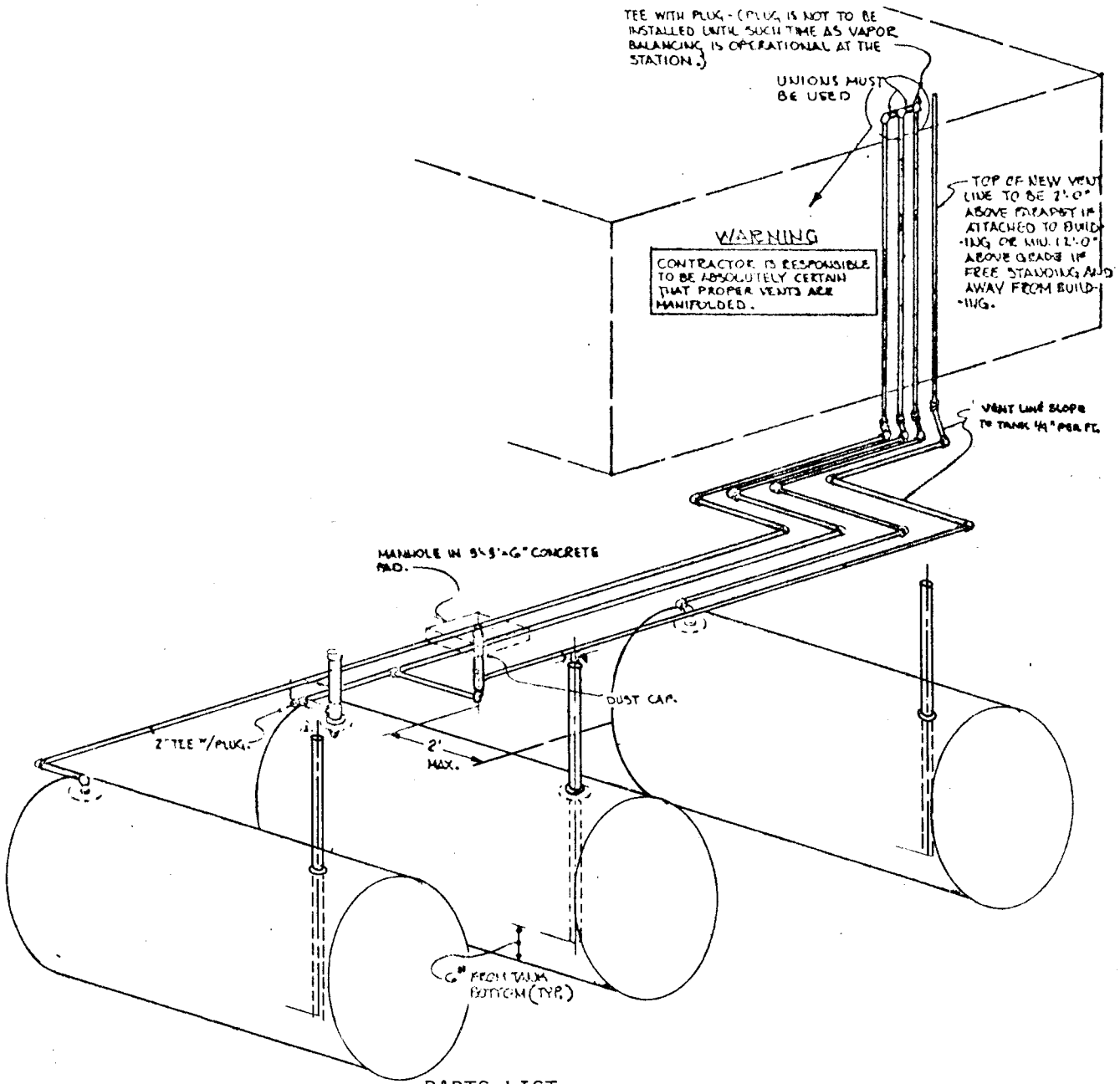


PARTS LIST

| A. Manufacturer | Fill Tube | Dust Cap | | Adaptors | | Elbows | | Extractor Assy. with Ball Check |
|---|---|---|---|---|---|---|---|---|
| | | Fill | Vapor | Fill | Vapor | Fill | Vapor | |
| OPW - DOVER | 61 T* | 62 TT* | 1711 TK3* | 61 AS* | 1611 VRL | 60*<br>60 T | 1711 V3* | 233 VTS-2 |

B. Vent Piping - 2 inch galvanized steel and/or Fiberglass and P/V* valve (optional)

Note: Aluminum drop tube to extend to within 6 inches of bottom of underground tank
*Components indicated may be interchanged with those given in Executive Order G-70-2-D