State of California
AIR RESOURCES BOARD

Executive Order G-70-2-G

Relating to the Modification of the Certification of the OPW Model A-7 2 Point Vapor Recovery System for Underground Storage Tanks at Gasoline Service Stations.

WHEREAS, the Air Resources Board (the "Board") has established, pursuant to Sections 39600, 39601, and 41954 of the Health and Safety Code, certification procedures for systems designed for the control of gasoline vapor emissions displaced during the filling of underground tanks at service stations ("Phase I vapor recovery systems") in its "Certification Procedures for Gasoline Vapor Recovery Systems at Service Stations" as last amended December 4, 1981 (the "Certification Procedures"), incorporated by reference in Section 94001 of Title 17, California Administrative Code;

WHEREAS, the Board has established, pursuant to Sections 39600, 39601, and 41954 of the Health and Safety Code, test procedures for determining compliance of Phase I vapor recovery systems with emission standards in its "Test Procedures for Determining the Efficiency of Gasoline Vapor Recovery Systems at Services Stations" as last amended September 1, 1982 (the "Test Procedures"), incorporated by reference in Section 94000 of Title 17, California Administrative Code;

WHEREAS, Dover Corporation/OPW Division ("OPW") has applied for certification to add optional components, for the purpose of overfill protection, to the certification of the existing OPW Model A-5 Phase I vapor recovery system. The modified system, referred to as an OPW Model A-7 Phase I vapor recovery system, incorporates an OPW Model 233 VM Extractor S/A, and an OPW Model 53 VM Float Vent Valve.

WHEREAS, the OPW Model A-7 Phase I vapor recovery system has been evaluated pursuant to the Board's Certification Procedures and Test Procedures;

WHEREAS, Section VIII-A of the Certification Procedures provides that the Executive Officer shall issue an order of certification if he or she determines that a vapor recovery system conforms to all of the requirements set forth in Sections I through VII;

WHEREAS, I find that the OPW Model A-7 Phase I vapor recovery system conforms with all the requirements set forth in Sections I through VII of the Certification Procedures and is at least 95 percent efficient when connected to a vapor tight cargo tank equipped with compatible fittings for all installations except those service stations equipped with Red Jacket and Healy Phase II vapor recovery systems.

NOW THEREFORE, IT IS HEREBY ORDERED that the certification, Executive Order G-70-2-F, issued on July 14, 1981 for the OPW Model A-5 Phase I vapor recovery system (Exhibit 1), is hereby modified to allow the optional use of the OPW Model A-7 Phase I vapor recovery system on underground gasoline storage tanks at service stations except those service stations equipped with Red Jacket and Healy Phase II vapor recovery systems. The system is shown in Exhibit 3; interchangeable equipment between the OPW Models A-5 and A-7 vapor recovery systems is shown in Exhibit 2.

IT IS FURTHER ORDERED that the use of pressure-vacuum valve shall require the prior approval of the local fire chief and that the tanks and piping shall comply with the appropriate General Industry Safety Orders and in particular the provisions of Articles 144, 145, and 146 thereof.

IT IS FURTHER ORDERED that compliance with the applicable certification requirements and rules and regulations of the Division of Measurement Standards, the Office of the State Fire Marshal, and the Division of Occupational Safety and Health of the Department of Industrial Relations is made a condition of this certification.

IT IS FURTHER ORDERED that the system certified hereby shall in actual use return to the delivery tanks a minimum of 95 percent by weight of the gasoline vapors displaced from the underground storage tank. Compliance with this criterion shall be a condition of this certification and if not met shall constitute grounds for the revocation, suspension, or modification of this certification

IT IS FURTHER ORDERED that any alteration of the equipment, parts, design, or operation of the configurations certified hereby, is prohibited, and deemed inconsistent with this certification, unless such alteration has been approved by the undersigned or the Executive Officer's designee.

Executed at Sacramento, California this 14 day of Oct, 1984.

James D. Boyd
Executive Officer

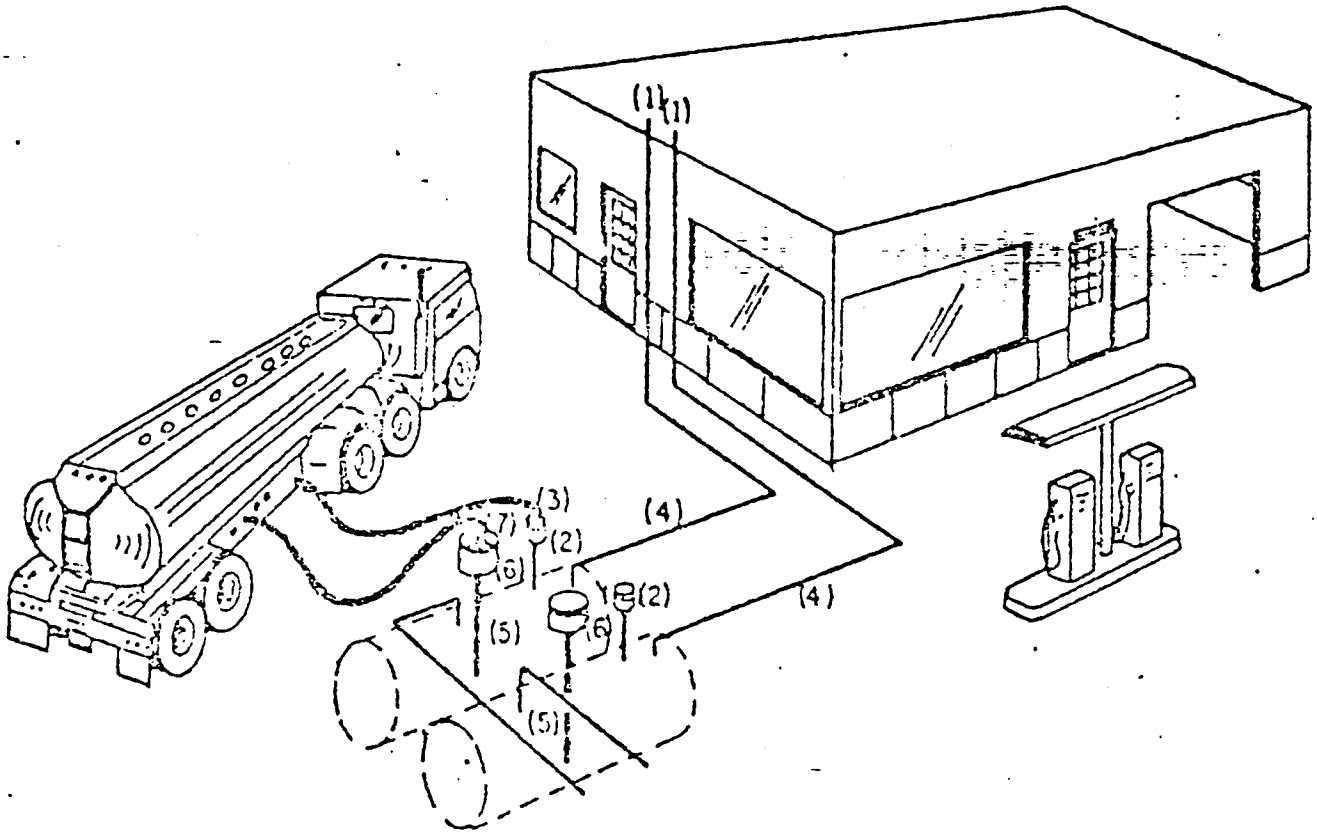

PARTS LIST

(1) VAREC 2010-811 P/V Valve (Optional)

(2) OPW 1611-AV3" Dry break with an OPW 1711T or OPW 1711TK Locking cap.

(3) OPW 1711-V3" Elbow.

(4) 2" Vent pipe.

(5) Aluminum drop tube (extend to within 6" bottom of tank).

(6) OPW 61AS Adapter or OPW 633T Adapter

(7) OPW 60 Elbow or OPW 60T Elbow

Note: Vent pipes may be manifolded.

EXECUTIVE ORDER G-70-2-G

EXHIBIT 1

OPW SYSTEM A TYPE 5
VAPOR RECOVERY SYSTEM

EXECUTIVE ORDER G-70-2-G

EXHIBIT 2

Equipment Approved for Use as Interchangeable with the OPW System A Type 5 and A-7 Vapor Recovery Systems For Underground Storage Tanks at Gasoline Service Stations

Manufacturer	Fill Tube	Dust Caps		Adaptors		Elbows		Pressure Vacuum Relief Valve
		Fill	Vapor	Fill	Vapor	Fill	Vapor	
OPW	61 T	62 634 TT 62 TT	1711 TK 1711 T	61 AS 633 T	1611 AV3	60 60 T	1711 V3 1711 VP 1711 VT	95 UTE
Universal	723	731 FT 732 FT	0612 VC	724 S 727	0611 V3			46
EBW	782	777 775	304	778 776	300			802
McDonald	245	268C 267C		236 W 268 A 267 A				
C. N. I.		64-4 32-4	611-Vr3		A611 DB			
Emco-Wheaton	A20 Sh-63	A 39 A 29 A 49	A 82 491521 A97 A99	A 30 A 50	A 76		F 77	A 84
Andrews	TF	54 FPC 54 LC 162 LC	400 DC-L	54 AG 161 AS		56 TFR		
Varec								2010-81
Evertite				97 A		99 C		
Parker-Hannifin							F 223(A) F 225	
York-Serv, Inc.				*101* *102*				
Pomeco				121				

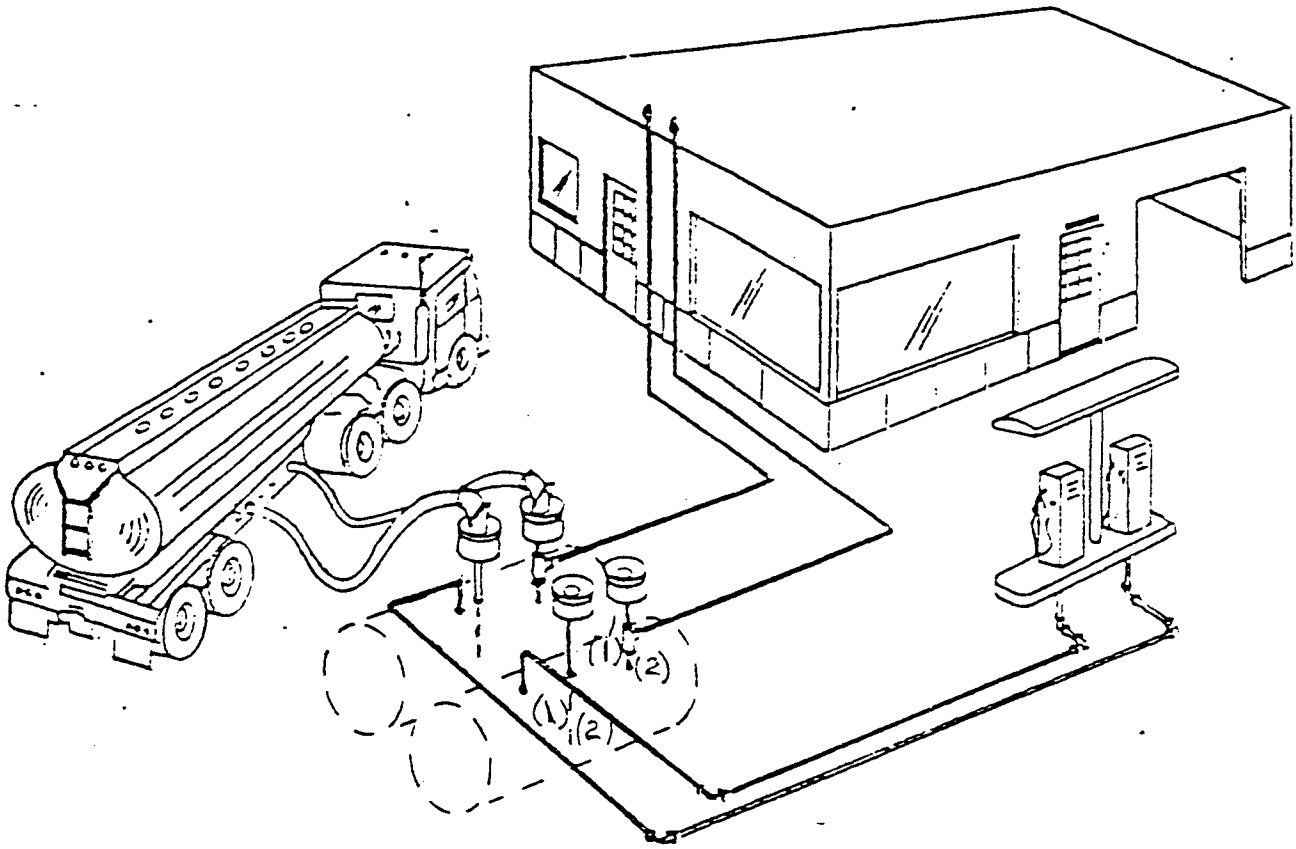

PARTS LIST

(1) OPW 233VM Extractor S/A.
(2) OPW 53VM Float Vent Valve.

Note: All other acceptable components are listed on Exhibit 1 and Exhibit 2. The OPW Model A-7 Phase I vapor recovery system is not approved for use at service stations equipped with Red Jacket or Healy Phase II vapor recovery systems.

Executive Order G-70-2-G
EXHIBIT 3
OPW MODEL A-7
PHASE 1 VAPOR RECOVERY SYSTEM