State of California
AIR RESOURCES BOARD

Executive Order G-70-97-A

Stage I Vapor Recovery Systems for Underground
Gasoline Storage Tanks at Service Stations

WHEREAS, the Air Resources Board (the "Board") has established, pursuant to Sections 39600, 39601, and 41954 of the Health and Safety Code, certification procedures for systems designed for the control of gasoline vapor emissions during filling of underground gasoline storage tanks ("Stage I vapor recovery systems") in its "Certification Procedures for Gasoline Vapor Recovery Systems at Service Stations" as last amended December 4, 1981 (the "Certification Procedures"), incorporated by reference in Section 94001 of Title 17, California Administrative Code;

WHEREAS, the Board has established, pursuant to Sections 39600, 39601, and 41954 of the Health and Safety Code, test procedures for determining compliance of Stage I vapor recovery systems with emission standards in its "Test Procedures for Determining the Efficiency of Gasoline Vapor Recovery Systems at Services Stations" as last amended September 1, 1982 (the "Test Procedures"), incorporated by reference in Section 94000 of Title 17, California Administrative Code;

WHEREAS, the Board finds it beneficial to consolidate Executive Orders G-70-47-B, G-70-4-A, and G-70-2-G, certifying Stage I vapor recovery systems in order to have a complete listing by manufacturer of all Stage I vapor control equipment which has been certified and is available for use in the coaxial and/or two point Stage I vapor recovery systems;

WHEREAS, the Board finds it necessary to revise Executive Order G-70-97 to clarify the requirement for pressure/vacuum relief valves on the vents of underground storage tanks and to clarify the interchangeability of certain Stage I vapor recovery system componets.

NOW THEREFORE, IT IS HEREBY ORDERED that Executive Order G-70-97 issued on May 13, 1985 for Stage I vapor recovery systems for underground gasoline storage tanks be modified by this Executive Order G-70-97-A.

IT IS FURTHER ORDERED that Stage I Systems will conform to one of the four options shown in Figures 1 thru 4 of this Executive Order and only certified vapor recovery components (or fittings) may be used in the systems. Exhibits 1 thru 3 (Attached) list by manufacturer all of the certified fittings approved for use with Stage I vapor recovery systems. The systems shall otherwise comply with all the certification requirements in the latest "Certification Procedures for Gasoline Vapor Recovery Systems at Service Stations" applicable to Stage I systems.

IT IS FURTHER ORDERED that any underground storage tank equipped with a Stage I vapor recovery system and filled from a gasoline delivery tank equipped with pressure-differential activated vapor-return vent valves must have a pressure-vacuum relief valve on the vent of the underground storage tank.

IT IS HEREBY ORDERED that compliance with the applicable certification requirements and rules and regulations of the Division of Measurement Standards, the Office of the State Fire Marshal, and the Division of Occupational Safety and Health of the Department of Industrial Relations is made a condition of this certification.

IT IS FURTHER ORDERED that the components and alternative configurations certified hereby shall perform in actual use with the same effectiveness as the certification test system.

IT IS FURTHER ORDERED that any alteration of the equipment, parts, design, or operation of the configurations certified hereby, is prohibited, and deemed inconsistent with this certification, unless such alteration has been approved by the undersigned or the Executive Officer's designee.

Executed at Sacramento, California this 9th day of December 1985.

for James D. Boyd
Executive Officer

FIGURE 1

Two Point Stage 1 Vapor Recovery System
Without Overfill Protection

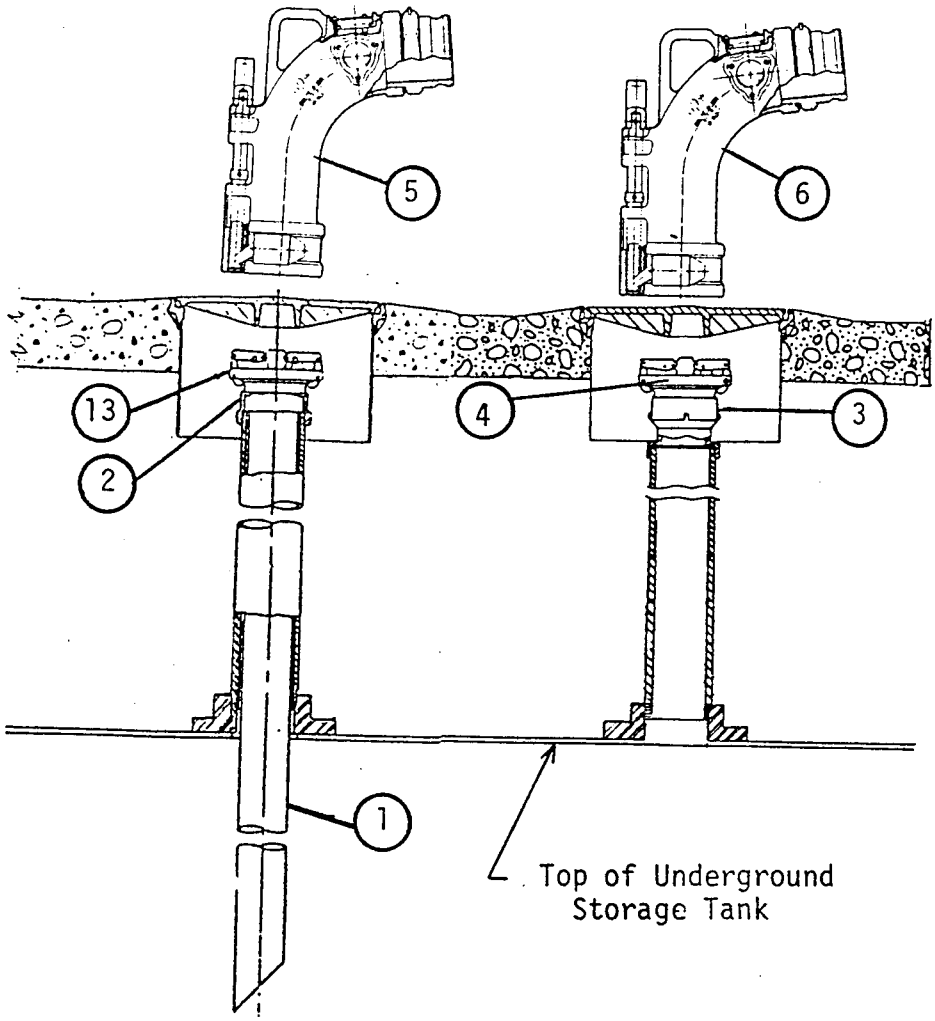

LEGEND

1 Fill Tube
2 Fill Adapter
3 Vapor Adapter
4 Vapor Cap
5 Product Elbow
6 Vapor Elbow
13 Fill Cap

FIGURE 2

Coaxial Stage 1 Vapor Recovery System
Without Overfill Protection

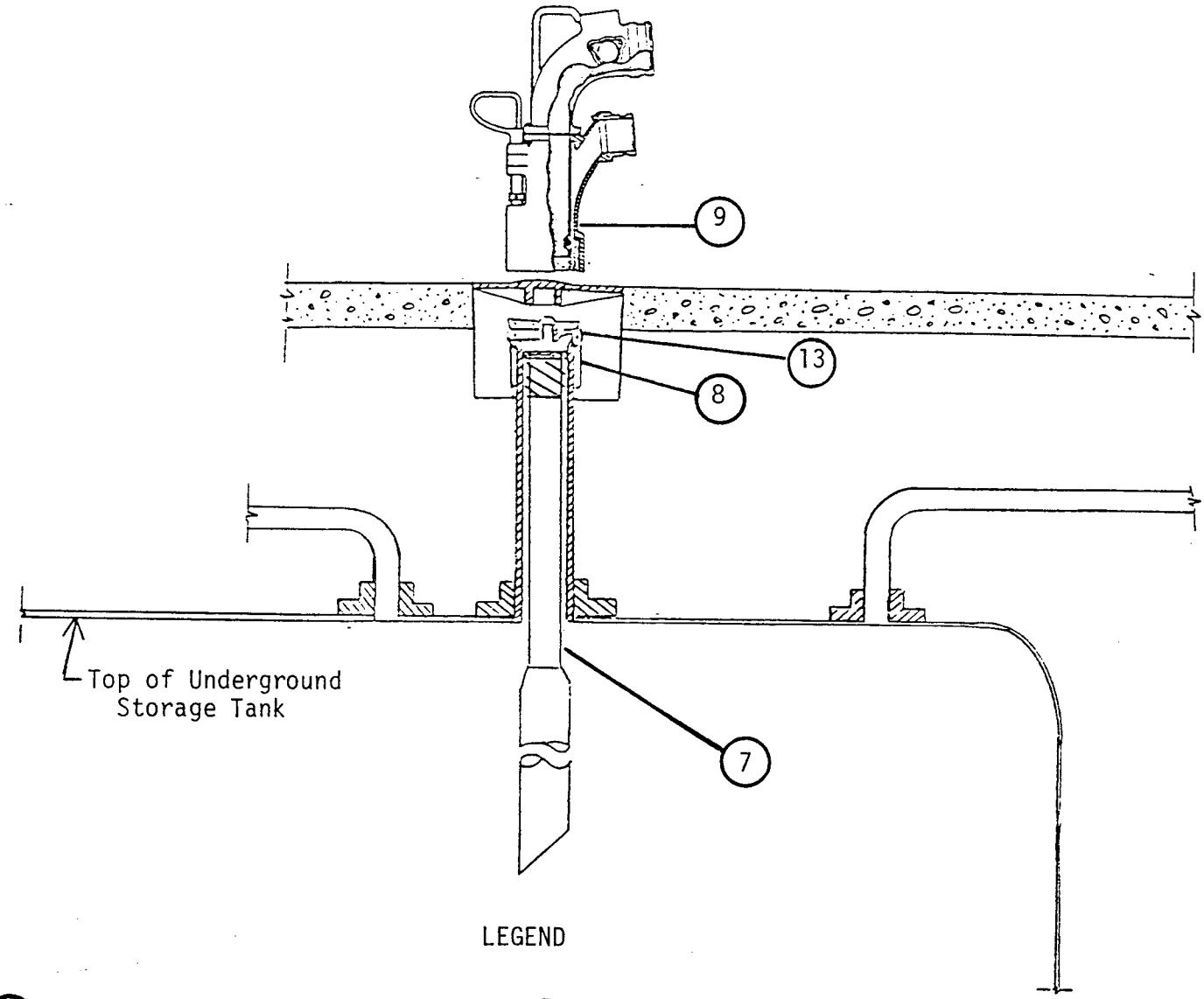

LEGEND

7 Coaxial Poppeted Fill Tube

8 Coaxial Fill Adapter

9 Coaxial Elbow

13 Fill Cap

FIGURE 3

Two Point Stage I Vapor Recovery System With Overfill Protection

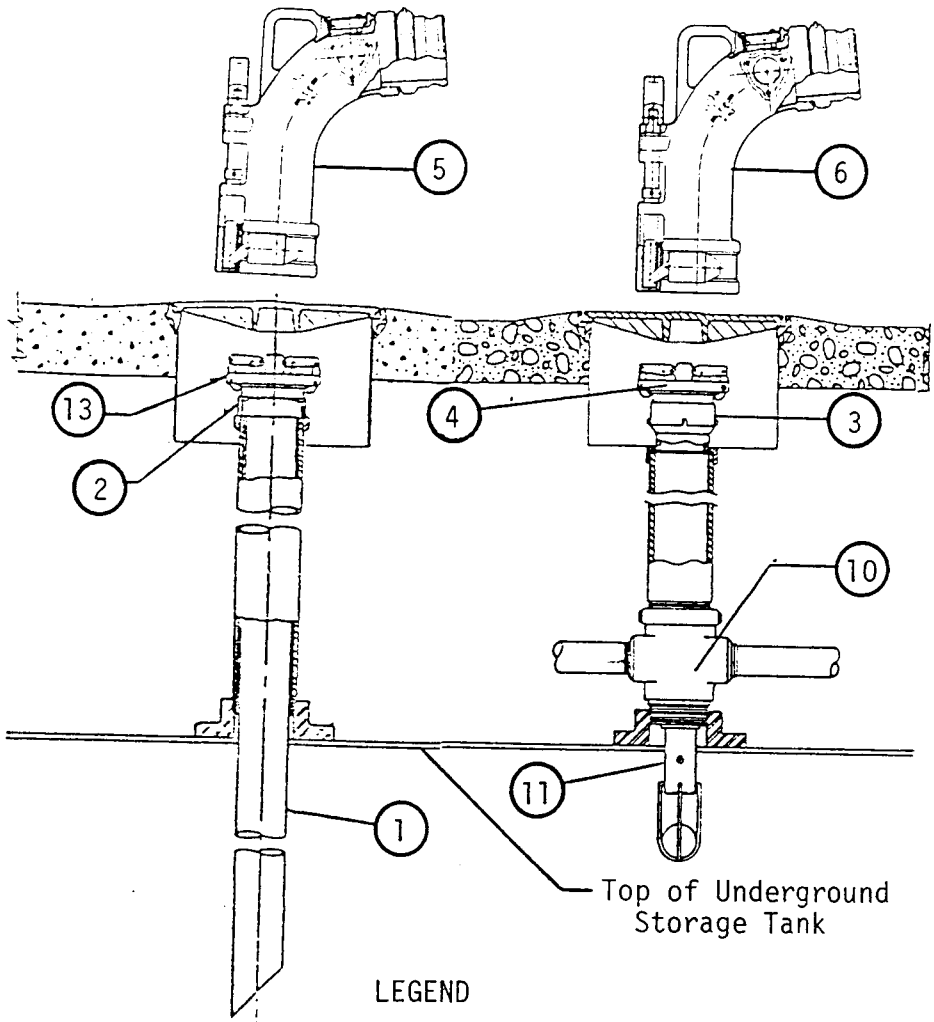

LEGEND

1. Fill Tube
2. Fill Adapter
3. Vapor Adapter
4. Vapor Cap
5. Fill Elbow
6. Vapor Elbow
10. Extractor Assembly
11. Float Vent Valve
13. Fill Cap

WARNING:

1. This system is not approved for use at service stations equipped with Red Jacket or Healy Phase II vapor recovery systems.

2. Float valve overfill protection systems should only be used on submerged pumping systems not with suction pump systems.

3. Overfill protection systems should only be used on gravity drop systems. Do not use where pump off unloading is used.

FIGURE 4

Coaxial Stage 1 Vapor Recovery System
With Overfill Protection

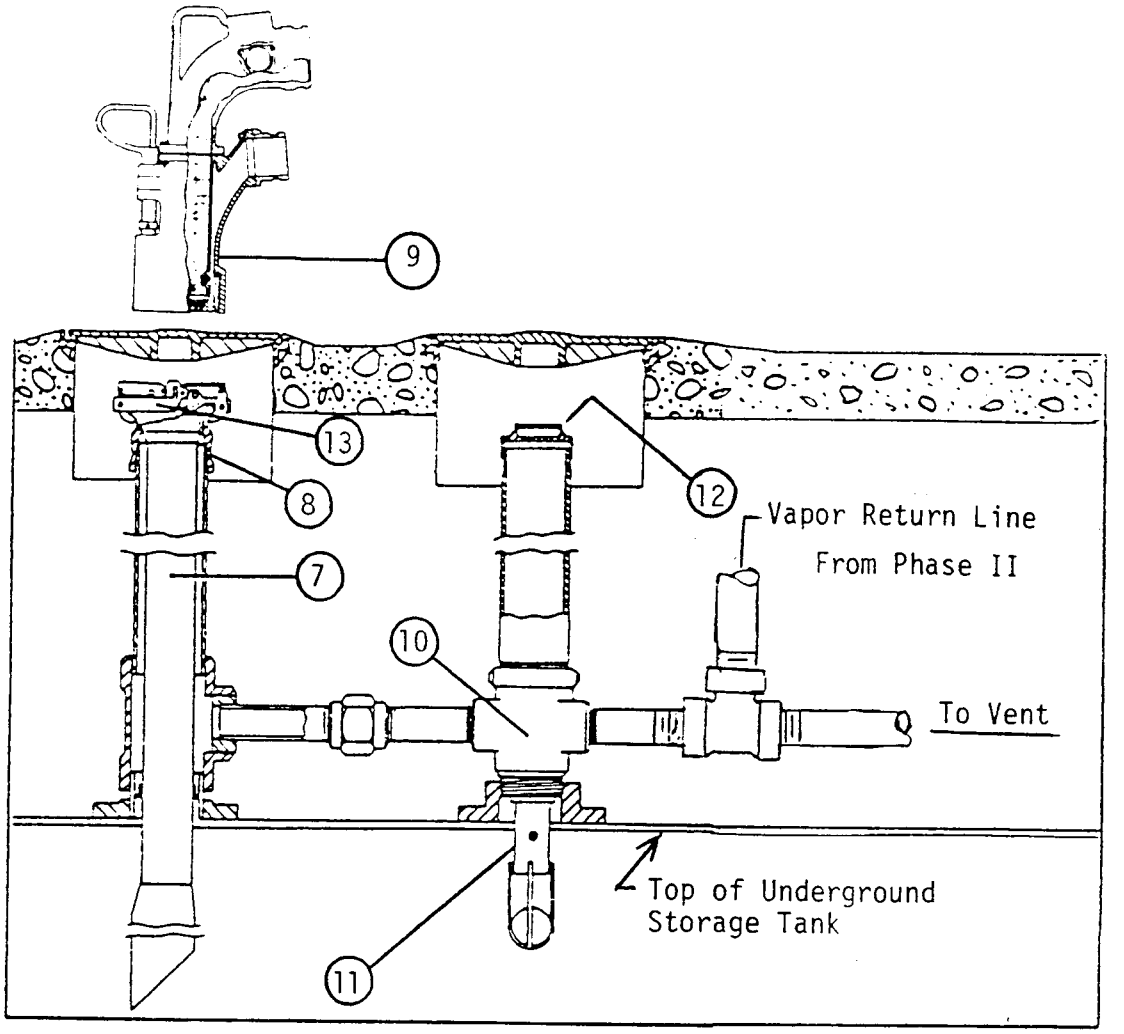

LEGEND

7	Coaxial Poppeted Fill Tube	10	Extractor Assembly
8	Coaxial Fill Adapter	11	Float Vent Valve
9	Coaxial Elbow	12	Pipe Cap[1/]
		13	Fill Cap

WARNING:

1. This system is not approved for use at service stations equipped with Red Jacket or Healy Phase II vapor recovery systems.
2. Float valve overfill protection systems should only be used as submerged pumping systems, not with suction pump systems.
3. Overfill protection systems should only be used on gravity drop systems. Do not use where pump off unloading is used.

1/ Required when a two point system is modified to a coaxial system.

EXHIBIT 1

Fittings Approved For Use On The Two Point Stage I Vapor Recovery Systems

	Fittings Required For All Two Point Stage I Vapor Recovery Systems For Locations see Figure 1						Additional Fittings Required For Two Point Vapor Recovery Systems With Stage I Overfill Protection. For Locations See Figure 3		
Legend No.	1	2	3	4	5	6	10 + 11	10	11
Manufacturer	Fill Tube	Fill Adapter	Vapor Adapter	Vapor Cap	Elbows Fill	Elbows Vapor	Extractor Assembly With Float Vent Valve	Extractor	Float Vent Valve
OPW	61 T	61 AS 633 T	1611 AV	1711 T 1711 TK	60 AS 60 T 60 TT	1711VT 1711VP	233 - MSD 233 - VTS 233 - SD	233 - VM 233 - V 233 - V	53 - VM 53 - VTS 53 - VM
Universal	723	724 727	0611 V	0612 VC 0613 VC 0614 VC		0711 V	V 420		37
EBW	782	776 778	300	304					
McDonald	245	268 A 267 A							
CNI		613 615	611 DB	611 VR			119		
Emco-Wheaton	A 20	A 30	A 76	A 99	F523	F 77	A79 Series	562291 or 562016	A-75
Andrews 1/	TF	54 AG		400 DC-L	56 TFR				
Evertite		97 A			99 C				
York-Serv, Inc.		101 102							

1/ Now owned by Dixon Valve & Coupling Company.

EXHIBIT 2

Fittings Approved For Use On The Coaxial Stage I Vapor Recovery System

Fillings Required For All Coaxial Stage I Vapor Recovery Systems			Additional Fittings Required For Coaxial Stage I Vapor Recovery Systems with Overfill Protection		
Legend No.	7 + 8	9	10 + 11	10	11
Manufacturer	Coaxial Poppeted Fill Tube Assembly with Adapter	Coaxial Elbow	Extractor Assembly With Float Vent Valve	Extractor Assembly	Float Vent Valve
OPW	68-TCP	60 TC 60 TTC	233-MSD 233-VTS	233-VM	53-VM 53-VTS
Emco Wheaton	4" Tube A88-001 3" Tube A88-003	F 298	A79-002 A79-003 A79-004	562290 or 562016	A 75
EBW	783-215				
Universal Valve Co.			V-420		37
CNI			119		

EXHIBIT 3

Fittings Approved For All Stage I Vapor Recovery Systems

Legend No.	(12)	(13)		
Manufacturer	Pipe Cap 1/	Fill Caps		Pressure Vacuum Relief Valve
		Top Seal	Side Seal	
OPW	116	634 TT	62 62 TT	95 UTE
Universal		731 733	727 732 734	
EBW		777	775	
McDonald		268 C	267 C	
CNI		64	32 33	
Emco Wheaton	A584	A 39 A 97		
Andrews 2/		400 FPC 54 LC		
Varec				2010-811
Hazlett				H-PVB-1

1/ Required when a Two Point System is converted to a Coaxial System with overfill protection.

2/ Now owned by Dixon Valve & Coupling Company.