United States
Environmental Protection
Agency

Environmental Monitoring Systems
Laboratory
Research Triangle Park NC 27711

Research and Development

EPA-600/4-77-027b Feb. 1984

EPA

Section 3.12 Method 9—Visible Determination of the Opacity of Emissions from Stationary Sources

Outline

Section	Documentation	Number of Pages
Summary	3.12.0	2
Method Highlights	3.12.0	2
Method Description		
1. Certification and Training of Observers	3.12.1	5
2. Procurement of Apparatus and Supplies	3.12.2	2
3. Preobservation Operations	3.12.3	2
4. On-Site Field Observations	3.12.4	18
5. Postobservation Operations	3.12.5	2
6. Calculations	3.12.6	7
7. Auditing Procedures	3.12.7	2
8. Reference Method	3.12.8	5
9. References and Bibliography	3.12.9	1
10. Data Forms	3.12.10	9

Summary

Many stationary sources discharge plume-shaped visible emissions into the atmosphere. Method 9 (EPA Reference Method) is used to determine the opacity of this plume by qualified observers. The method includes procedures for the training and certification of observers and procedures to be used by these observers in the field to determine plume opacity. This section of the Quality Assurance (QA) Handbook primarily concerns procedures used by the observers. Only Section 3.12.1 reviews the training and certification procedures, which are described in Reference 1.

The appearance of a plume as viewed by an observer depends upon a number of variables, some of which may be controllable and some of which may not be controllable in the field. Variables which can be controlled to an extent to which they no longer exert a significant influence upon plume appearance include: angle of the observer with respect to the plume; angle of the observer with respect to the sun; point of observation of attached and detached steam plumes and angle of the observer with respect to a plume emitted from a rectangular stack with a large length to width ratio. The

method includes specific criteria applicable to these variables.

Other variables which may not be controllable in the field are luminescence and color contrast between the plume and the background against which the plume is viewed. These variables exert an influence upon the appearance of a plume as viewed by an observer, and can affect the ability of the observer to accurately assign opacity values to the observed plume. Research studies of plume opacity have demonstrated that a plume is most visible and presents the greatest apparent opacity when viewed against a contrasting background. It follows from this, and is confirmed by field trials, that the opacity of a plume, viewed under conditions where a contrasting background is present can be assigned with the greatest degree of accuracy. However, the potential for a positive error is also the greatest when a plume is viewed under such contrasting conditions. Under conditions presenting a less contrasting background, the apparent opacity of a plume is less and approaches zero as the color and luminescence contrast decrease toward zero. As a result, significant negative bias and negative errors can be made when a plume is viewed under less contrasting conditions. A negative bias decreases rather than increases the possibility that a plant operator will be cited for a violation of opacity standards due to observer error.

Method 9 is applicable for the determination of the opacity of emissions from stationary sources pursuant to 60.11(b). Studies have been undertaken to determine the magnitude of positive errors that qualified observers can make while reading plumes under contrasting conditions and using the procedures specified in Method 9. The results of these studies, which involve a total of 769 sets of 25 readings each, are as follows:

1. In the case of black plumes, 100 percent of the sets were read with positive error of less than 7.5 percent opacity; 99 percent were read with a positive error of less than 5 percent opacity.
2. In the case of white plumes, 99 percent of the sets were read with a positive error (higher values) of less than 7.5 percent opacity; 95 percent were read with a positive error of less than 5 percent opacity.

The positive observational error associated with an average of twenty-five readings is therefore established. The accuracy of the method must be taken into account when determining possible violations of applicable opacity standards.

Note: Proper application of Method 9 by control agency personnel in determining the compliance status of sources subject to opacity standards often involves a number of administrative and technical procedural steps not specifically addressed in the *Federal Register* method. Experience has shown these steps are necessary to lay a proper foundation for any subsequent enforcement action. To clearly delineate items that are EPA procedural policy and requirements of the Method 9 from additional quality assurance procedures, a wording scheme was developed. All of Sections 3.12.1, 3.12.2, 3.12.3, 3.12.6, and 3.12.7 are suggested quality assurance procedures except where noted as EPA policy or *Federal Register* citings. Section 3.12.4 notes EPA requirements with directive statements using words such as shall, should, and must. QA procedures are noted either with suggestive statements using words such as recommended, suggested, and beneficial or by stating that the entire subsection is recommended. The use of these QA procedures should provide a more consistent program, improved observer effectiveness and efficiency, and improved data documentation.

Method Highlights

Section 3.12 primarily describes Method 9 procedures for the determination of plume opacity. Section 3.12.1 briefly reviews the quality assurance procedures to be used in the observer training and certification procedures described in detail in Reference 1. The remaining sections describe the field procedures.

Section 3.12.10 provides blank data forms recommended for use by the observer and other personnel, as required. Partially completed forms are included in Sections 3.12.1 through 3.12.7 of the Method Description. Each form in Section 3.12.10 has a subtitle (e.g., Method 9, Figure 2.1) to allow easy reference to the corresponding completed form.

The following paragraphs present a brief discussion of the contents of this section of the QA Handbook.

1. *Certification and Training of Observers* The primary purpose of this section is to provide a brief summary of the certification and training procedures described in Reference 1. It includes a definition and a brief history of opacity, and it discusses observer training procedures and certification and recertification of observers.

2. *Procurement of Apparatus and Supplies* Section 3.12.2 presents specifications criteria and design features to aid the procurement of useful equipment that would provide good quality visible emissions data. The following are some recommended equipment items not specifically required by Method 9: watch, compass, range finder, Abney level or clinometer, sling psychrometer, binoculars, camera, safety equipment, clipboard, and accessories. Table 2.1 summarizes the quality assurance aspects of equipment procurement.

3. *Preobservation Operations* Section 3.12.3 summarizes the preobservation activities: gathering facility information, providing prior notification, establishing protocol, and performing equipment checks. Table 3.1 summarizes these procedures.

4. *On-Site Field Observations* Section 3.12.4 contains detailed procedures for determining the visible emissions (VE). This section not only includes the recommended procedures for performing the perimeter survey, plant entry, and VE determination; it also contains a subsection on special observation problems. This subsection explains how to take VE readings under less than ideal conditions (e.g., when the observer position is restricted). The main feature of this section is the presentation of detailed instructions on how to complete the recommended VE data form, and examples of completed forms.

5. *Postobservation Operations* Section 3.12.5 presents a brief discussion concerning the data reporting procedures, data summary, data validation, and equipment check. Section 3.12.6 contains a discussion of the calculations required for completing the data forms and reports. It also includes procedures for calculating the path length through the plume and for predicting steam plume formation by use of a psychrometric chart and pertinent measurements.

6. *Auditing Procedures* Section 3.12.7 recommends performance and system audits for use with field VE determinations. The two performance

audits are an audit by senior observer/supervisor and a data calculation audit. A system audit is suggested, along with a Method 9 checklist, as shown in Figure 7.1. Table 7.1 summarizes the quality assurance activities for audits.

7. *References and Bibliography* Sections 3.12.8 and 3.12.9 contain the Method 9 and suggested references and bibliography.

8. *Data Forms* Section 3.12.10 provides blank data forms which can be taken from the QA Handbook for field use or serve as the basis of a revised form to be used by the Agency. Partially completed forms are included in the corresponding section of the QA Handbook.

1.0 Certification and Training of Observers

The purpose of this section is to summarize the content of the QA manual for VE training programs.[1] Since the observer must be properly certified or a qualified VE reader in order to have his/her opacity reading accepted, it is important that he/she fully understand this phase of his/her training.

1.1 Definition and Brief History of Opacity

The VE evaluation system evolved from the concept developed by Maximillian Ringelmann in the late 1800's, in which a chart with calibrated black grids on a white background was used to measure black smoke emissions from coal-fired boilers. The Ringelmann Chart was adopted by the U.S. Bureau of Mines in the early 1900's and was used extensively in efforts to assess and control emissions. In the early 1950's, the Ringelmann concept was expanded to other colors of smoke by the introduction of the concept of "equivalent opacity."

The Federal government has discontinued the use of Ringelmann numbers in EPA Method 9 procedures for New Source Performance Standards (NSPS). Current procedures are based solely on opacity. Although some State regulations still specify the use of the Ringelmann Chart to evaluate black and gray plumes, the general trend is toward reading all emissions in percent opacity.

In practice, the evaluation of opacity by the human eye is a complex phenomenon and is not completely understood. However, it is well documented that visible emissions can be assessed accurately and with good reproducibility by properly trained/certified observers.

The relationships between light transmittance, plume opacity, Ringlemann number, and optical density are presented in Table 1.1. A literal definition of plume opacity is the degree to which the transmission of light is reduced or the degree to which visibility of a background as viewed through the diameter of a plume is reduced. In terms of physical optics, opacity is dependent upon transmittance (I/I_o) through the plume; where I_o is the incident light flux and I is the light flux leaving the plume along the same light path. Percent opacity is defined as follows:

$$\text{Percent opacity} = (1-I/I_o) \times 100.$$

Many factors influence plume opacity readings: particle density, particle refractive index, particle size distribution, particle color, plume background, path length, distance and relative elevation to stack exit, sun angle, and lighting conditions. Particle size is particularly significant; particles decrease light transmission by both scattering and direct absorption. Thus, particles with diameters approximately equal to the wavelength of visible light (0.4 to 0.7 μm) have the greatest scattering effect and cause the highest opacity.

1.2 Training of Observer

Field inspectors and observers are required to maintain their opacity evaluation skills by periodically participating in a rigorous VE certification program. Accordingly, EPA's Stationary Source Compliance Division (SSCD) and Environmental Monitoring Systems Laboratory (EMSL) have provided the QA training document[1] to individuals who conduct VE training and certification programs. This section summarizes the training program.

1.2.1 Frequency of Training Sessions — Certification schools should be scheduled at least twice per year since Method 9 requires a semiannual recertification. It is highly recommended that training be an integral part of the certification program. A spring/fall schedule is preferable because of weather considerations. Certifying previous graduates while the smoke school is in session is more efficient and less costly than scheduling a separate session.

1.2.2 Classroom Training — The training is accomplished most effectively by holding an intensive 1- or 2-day classroom lecture/discussion session. Although this training is not required, it is highly recommended for the following reasons:

1. Increases the VE observer's knowledge and confidence for the day-to-day field practice and application.
2. Reduces training time required to achieve certification.
3. Trains the smoke reader in the proper recording and presentation of data that will withstand the rigors of litigation and strengthens an agency's compliance and enforcement program.
4. Provides a forum for the periodic exchange of technical ideas and information.

Some states require classroom training for initial certification only. It is recommended, however, that observers attend the classroom training at 3-year intervals to review proper field observation techniques and method changes and to participate in the exchange of ideas and new information.

1.2.3 Lecture Material — Example lecture material for a thorough training program is presented in Section 3.1 and Appendix A of Reference 1. A typical six-lecture classroom training program consists of the following:

Lecture 1—Background, principles, and theory of opacity.
Lecture 2—Sources of VE's, presented by someone thoroughly familiar with source conditions, related particle characteristics, and opacity reading procedures and problems.
Lecture 3—Proper procedures for conducting field observations under a variety of conditions.

Table 1.1. Comparison of Light, Extinction Terms

Light transmission, %	Optical density units	Plume opacity, %	Ringelmann number
0	N/A[a]	100	5
20	0.70	80	4
40	0.40	60	3
60	0.22	40	2
80	0.10	20	1
100	0.00	0	0

[a] N/A = not applicable.

Lecture 4—Influence and impact of meteorology on plume behavior.
Lecture 5—Legal aspects of VE and opacity measurements.
Lecture 6—Actual observation/testing procedures.

1.2.4 Training Equipment — An integral part of the training program is the design and operation of the smoke generator and its associated transmissometer, as specified in Method 9 (reproduced in Section 3.12.8). Such a program is essential because proper observer certification cannot take place without the proper equipment. Section 4 of Reference 1 presents performance specifications and operating procedures for smoke generators which, if followed under a good QA program, will ensure nationwide uniformity and consistency with Method 9 criteria.

The design and operation of the smoke generator has evolved significantly since the mid-1960's. The basic components of the smoke generator now include:

1. Black and white smoke generating units,
2. Fan and stack,
3. Transmissometer system, and
4. Control panel and strip chart recorder.

Table 1.2 lists the design and performance specifications for the smoke generator. It must generate smoke with an opacity range of 0 to 100 percent and be sufficiently accurate to allow the operator to control and stabilize the opacity of the smoke. It is recommended that the generator also achieve and hold opacities in 5 percent increments at ±2 percent for a minimum of 5 s.

White smoke is produced by dispensing, at regulated rates, No. 2 fuel oil into the propane-heated vaporization chamber. The opacity varies in proportion to the volume of fuel oil vaporized and is regulated by adjusting the flow of fuel oil.

Black smoke is produced by the incomplete combustion of toluene in the double-wall combustion chamber. The toluene flowrate is also controlled by valves and flowmeters.

1.2.5 Equipment Calibration Procedures — Detailed calibration procedures are included in a QA procedures manual for VE training programs.[1] The generator transmissometers must be calibrated every six months or after each repair. The National Bureau of Standards (NBS) traceable standards (optical filters) for linearity response are available from Quality Assurance Division, Environmental Monitoring Systems Laboratory, U.S. EPA, Research Triangle Park, North Carolina 27711. It is strongly recommended that the calibration be performed before and after each certification course to ascertain whether any significant drift or deviation has occurred during the training period. The "zero and span" check must be repeated before and after each test run. If the drift exceeds 1 percent opacity after a typical 30-min test run, the instrument must be corrected to 0 and 100 percent of scale before resuming the testing.

All of the smoke generator performance verification procedures (e.g., repair and maintenance work, spectral response checks, calibration check, and response time checks) should be documented in writing and dated; a bound logbook is highly recommended. These records become part of the permanent files on the VE training program.

1.2.6 Setup, Operating, and Shutdown Procedures — Detailed procedures and a parts list are given in Section 4.4 of Reference 1.

1.2.7 Storage and Maintenance of the Smoke Generator — Proper storage and maintenance procedures are essential for smoke generators to increase their useful operating life and to provide reliability.

1.2.8 Common Problems, Hazards, and Corrective Actions — The generator has hot surfaces that can cause serious burns. It is recommended that attendees be advised to stay away from the generator during training and test runs. It is also recommended that gas and fuel lines be correctly checked for leaks prior to each use of the generator to prevent fire and explosive hazards to the operator and nearby attendees.

Occasional breakdowns or malfunctions of the generator usually occur at the most inopportune times. The problem must be diagnosed and repairs made expeditiously to provide the proper training and maintain the interest of the course attendees. Some common malfunctions are listed in Section 4 of the QA training manual.[1]

Table 1.2. Smoke Generator Design and Performance Specifications

Parameter	Performance
Light source	*Incandescent lamp operated at ±5% of nominal rated voltage*
Photocell spectral response	*Photopic (daylight spectral response of the human eye)*
Angle of view	*15° maximum total angle*
Angle of projection	*15° maximum total angle*
Calibration error	*±3% opacity, maximum*
Zero and span drift	*±1% opacity, 30 min*
Response time	*5 s, maximum*

1.3 Certification of Observer

This section summarizes the certification part of the training program. The first part of the certification program is to acclimate the smoke readers. The following procedure is recommended. Both black and white plumes are produced at certain levels, and during this production, the opacity values are announced. After some standards exposure, four plumes are presented to the trainee for evaluation. The correct values of the four plumes are announced to provide the trainee with immediate feedback. The majority of the trainees should be ready to take the test after a few sets. Certification runs are made in blocks of 50 readings (25 black smoke and 25 white smoke). The trainees who successfully meet the criteria receive a letter of certification and a copy of their qualification form. The school retains the original of the qualification form for a minimum of three years, to be available for any legal proceedings that might occur. According to Method 9, certification is valid for a period of *only six months*. Neither certification or recertification procedures require the observer to attend the lecture program; however, it is recommended that the observer attend the series during initial certification and thereafter every three years. It is also recommended that all persons unable to pass after 10 qualification runs, be provided additional training before allowing qualification runs to be made.

Test forms vary greatly because of the specific needs and experiences of each agency. Figure 1.1 illustrates one suggested form. The form should be printed on two-copy paper, the original for the official file and the carbon copy for the trainee to grade after each certification run. The test

Affiliation STATE OF VIRGINIA Name TOM ROSE Run Number 1-B

Course location RICHMOND Sunglasses NO

Date 4-15-82 Sky CLEAR Wind 3-5 MPH

Distance and direction to stack 150 FT. NNE

Reading number																						Error
1	0	5	10	15	20	(25)	30	35	40	45	50	55	60	65	70	75	80	85	90	95	100	
2	0	5	10	15	20	25	(30)	35	40	45	50	55	60	65	70	75	80	85	90	95	100	
3	0	5	10	15	20	25	30	35	40	45	(50)	55	60	65	70	75	80	85	90	95	100	
4	0	5	10	15	(20)	25	30	35	40	45	50	55	60	65	70	75	80	85	90	95	100	
5	0	5	10	15	20	25	(30)	35	40	45	50	55	60	65	70	75	80	85	90	95	100	
6	0	5	10	15	20	25	30	35	40	45	50	55	60	65	70	75	80	85	90	95	100	
7	0	5	10	15	20	25	30	35	40	45	50	55	60	65	70	75	80	85	90	95	100	
8	0	5	10	15	20	25	30	35	40	45	50	55	60	65	70	75	80	85	90	95	100	
9	0	5	10	15	20	25	30	35	40	45	50	55	60	65	70	75	80	85	90	95	100	
10	0	5	10	15	20	25	30	35	40	45	50	55	60	65	70	75	80	85	90	95	100	
11	0	5	10	15	20	25	30	35	40	45	50	55	60	65	70	75	80	85	90	95	100	
12	0	5	10	15	20	25	30	35	40	45	50	55	60	65	70	75	80	85	90	95	100	
13	0	5	10	15	20	25	30	35	40	45	50	55	60	65	70	75	80	85	90	95	100	
14	0	5	10	15	20	25	30	35	40	45	50	55	60	65	70	75	80	85	90	95	100	
15	0	5	10	15	20	25	30	35	40	45	50	55	60	65	70	75	80	85	90	95	100	
16	0	5	10	15	20	25	30	35	40	45	50	55	60	65	70	75	80	85	90	95	100	
17	0	5	10	15	20	25	30	35	40	45	50	55	60	65	70	75	80	85	90	95	100	
18	0	5	10	15	20	25	30	35	40	45	50	55	60	65	70	75	80	85	90	95	100	
19	0	5	10	15	20	25	30	35	40	45	50	55	60	65	70	75	80	85	90	95	100	
20	0	5	10	15	20	25	30	35	40	45	50	55	60	65	70	75	80	85	90	95	100	
21	0	5	10	15	20	25	30	35	40	45	50	55	60	65	70	75	80	85	90	95	100	
22	0	5	10	15	20	25	30	35	40	45	50	55	60	65	70	75	80	85	90	95	100	
23	0	5	10	15	20	25	30	35	40	45	50	55	60	65	70	75	80	85	90	95	100	
24	0	5	10	15	20	25	30	35	40	45	50	55	60	65	70	75	80	85	90	95	100	
25	0	5	10	15	20	25	30	35	40	45	50	55	60	65	70	75	80	85	90	95	100	

Deviation _____

Reading number																						Error
1	0	5	10	15	20	25	30	35	40	45	50	55	60	65	70	75	80	85	90	95	100	
2	0	5	10	15	20	25	30	35	40	45	50	55	60	65	70	75	80	85	90	95	100	
3	0	5	10	15	20	25	30	35	40	45	50	55	60	65	70	75	80	85	90	95	100	
4	0	5	10	15	20	25	30	35	40	45	50	55	60	65	70	75	80	85	90	95	100	
5	0	5	10	15	20	25	30	35	40	45	50	55	60	65	70	75	80	85	90	95	100	
6	0	5	10	15	20	25	30	35	40	45	50	55	60	65	70	75	80	85	90	95	100	
7	0	5	10	15	20	25	30	35	40	45	50	55	60	65	70	75	80	85	90	95	100	
8	0	5	10	15	20	25	30	35	40	45	50	55	60	65	70	75	80	85	90	95	100	
9	0	5	10	15	20	25	30	35	40	45	50	55	60	65	70	75	80	85	90	95	100	
10	0	5	10	15	20	25	30	35	40	45	50	55	60	65	70	75	80	85	90	95	100	
11	0	5	10	15	20	25	30	35	40	45	50	55	60	65	70	75	80	85	90	95	100	
12	0	5	10	15	20	25	30	35	40	45	50	55	60	65	70	75	80	85	90	95	100	
13	0	5	10	15	20	25	30	35	40	45	50	55	60	65	70	75	80	85	90	95	100	
14	0	5	10	15	20	25	30	35	40	45	50	55	60	65	70	75	80	85	90	95	100	
15	0	5	10	15	20	25	30	35	40	45	50	55	60	65	70	75	80	85	90	95	100	
16	0	5	10	15	20	25	30	35	40	45	50	55	60	65	70	75	80	85	90	95	100	
17	0	5	10	15	20	25	30	35	40	45	50	55	60	65	70	75	80	85	90	95	100	
18	0	5	10	15	20	25	30	35	40	45	50	55	60	65	70	75	80	85	90	95	100	
19	0	5	10	15	20	25	30	35	40	45	50	55	60	65	70	75	80	85	90	95	100	
20	0	5	10	15	20	25	30	35	40	45	50	55	60	65	70	75	80	85	90	95	100	
21	0	5	10	15	20	25	30	35	40	45	50	55	60	65	70	75	80	85	90	95	100	
22	0	5	10	15	20	25	30	35	40	45	50	55	60	65	70	75	80	85	90	95	100	
23	0	5	10	15	20	25	30	35	40	45	50	55	60	65	70	75	80	85	90	95	100	
24	0	5	10	15	20	25	30	35	40	45	50	55	60	65	70	75	80	85	90	95	100	
25	0	5	10	15	20	25	30	35	40	45	50	55	60	65	70	75	80	85	90	95	100	

Deviation _____

Figure 1.1. Sample certification test form.

form must be filled in completely. Certification requires that *both* of the following criteria be satisfied:

1. No reading may be in error by more than 15 percent opacity.
2. The average [absolute] error must not exceed 7.5 percent for either set of 25 white or 25 black smoke readings. The certification runs may be repeated as often as necessary. However, it is recommended that all persons who have not passed after ten certification runs be given additional training prior to conducting additional certification runs.

The detailed testing and grading procedures required to ensure a valid test are outlined in Section 5 of the QA training manual.[1] The Agency should maintain a bound logbook, arranged by training session, for at least three years, as evidence that the observer has been certified as a qualified VE evaluator by a recognized smoke training and certification group. Each trainee who successfully meets the Method 9 criteria receives a letter of certification and a copy of his/her qualification form. This letter includes the date of expiration.

1.4 Recertification

Method 9 requires an individual to be recertified every six months.

1.5 In-the-Field Training

After the observer's initial certification, it is recommended that a senior observer accompany the new observer on a field observation trip and that both individuals simultaneously record (using the same time piece) their opacity readings as a QA check (see Section 3.12.7). A comparison of these readings will indicate any problems the new observer might have in conducting observations under field conditions. A significant discrepancy between the readings of the two observers, in individual or average values, indicates the need for further in-field training and continuance of the senior observer (not necessarily the same one) QA check. After satisfactory checks have been made on two consecutive field observations, the new observer can confidently conduct inspections without a senior observer. The suggested standard for a satisfactory check for 6-min (minimum) of consecutive readings is:

1. No difference in individual readings should exceed 20 percent.
2. The difference of the average value between observers should not exceed 10 percent.

1.6 Smoke School Certification Quality Assurance Program

It is recommended that any government agency planning to develop a smoke school certification program obtain a copy of the "Recommended Quality Assurance Techniques and Procedures for Visible Emission Training Programs."[1] Table 1.3 contains an activity matrix for certification and training of observers.

Table 1.3. Activity Matrix for Certification and Training of Observers

Activity	Acceptance limits	Frequency and method of measurement	Action if requirements are not met
Classroom training of observer	Classroom training per Ref. 1 (suggested)	Initially and every 3 years	Review training procedures per Ref. 1
Smoke generator	Should be able to generate smoke with an opacity range of 0 to 100%; hold opacities ±2% for at least 5 s	Before each certification test run; use method in Ref. 1	Adjust and make repeat check of operation
Setup, operating, and shutdown procedures	Adherence to procedures in Ref. 1	Each test run	Review procedures
Storage and maintenance	As above	As above	As above
Transmissometer			
Design and performance specifications	Specifications in Table 1.2	Upon receipt, repair, and at 6-mo intervals use method in Ref. 1	Adjust and repeat specification check until specifications are met
Calibration	±3% opacity maximum	Every 6 mo or after repair, before and after each certification course is recommended; use method in Ref. 1	Adjust and recalibrate until acceptance limits are met
Zero and span	Opacity drift <1% after a typical 30-min test run	As above	Instruments must be corrected to 0 and 100% before testing is resumed
Certification of observer	No reading must be in error by more than 15% and average absolute error must not exceed 7.5% for either white or black smoke readings	Take smoke reading test until a successful test has been completed	Retake test until successful completion
Recertification	As above	Every 6 mo take a smoke reading test until a successful test has been completed	As above
In-the-field training	No reading in error by more than 20% difference and average absolute error should not exceed 10% difference during the field observation	Checks are made on the first two field observations subsequent to the initial certification; comparison is made between new certified observer and an experienced observer	Continue comparisons until acceptance limits are met during two field observations

2.0 Procurement of Apparatus and Supplies

Method 9 does not specifically require any equipment or supplies. Therefore, this entire section includes quality assurance procedures that are recommended to assist the observer in documenting data. Nevertheless, this section provides specifications criteria or design features, as applicable, to aid in the selection of equipment that may be useful in collecting VE data. Procedures and limits for acceptance checks are also provided. During the procurement of equipment and supplies, it is suggested that a procurement log (Figure 2.1) be used to record the descriptive title of the equipment, the identification number (if applicable), and results of any acceptance checks. Table 2.1 at the end of this section contains a summary of the quality assurance activities for procurement and acceptance of apparatus and supplies.

2.1 Stopwatch

A watch is used to time the 15-second intervals between opacity readings. The watch should provide a continuous display of time to the nearest second.

2.2 Compass

A compass is useful for determining the direction of the emission point from the spot where the VE observer stands and for determining the wind direction at the source. For accurate readings, the compass should be magnetic with resolution better than 10°. It is suggested that the compass be jewel-mounted and liquid-filled to dampen the needle swing; map reading compasses are excellent for this purpose.

2.3 Range Finder

A range finder is used to measure the observer's distance from the emission point and should be capable of determining distances to 1000 meters with an accuracy of ±10 percent. The accuracy of the range finder should be checked upon receipt and periodically thereafter with targets at known distances of approximately 500 meters and 1000 meters.

Item description	*Quantity*	*Purchase order number*	*Vendor*	*Date*		*Cost*	*Disposition*	*Comments*
				Ordered	*Received*			
Stopwatch	2	Z 5096	Fisher Scientific	5/1/82	5/14/82	$52.94	checked-ready to use.	

Figure 2.1. Example of a procurement log.

2.4 Abney Level or Clineometer

An Abney level is a device for determining the vertical viewing angle. For visible emission observation purposes, it should measure within 5 degrees. The accuracy should be tested by placing the level flat on a table that has been previously leveled with a referring level and checking it at a 45° angle by placing it on a 45° inclined plane constructed with the plane as the hypotenuse of a right triangle with equal base and height.

2.5 Sling Psychrometer

The sling psychrometer is used in cases where it is suspected that the atmospheric conditions will promote the formation of a steam plume (see Subsection 6.3). The psychrometer should consist of two thermometers, accurate to 1/2°C, mounted on a sturdy assembly whereby the thermometers may be swung rapidly in the air. One thermometer should be fitted with a wettable cotton wick tube on the bulb. Thermometer accuracy should be checked by placing the bulbs in a fresh ice water bath at 0°C.

2.6 Binoculars

It is recommended that the observer obtain binoculars preferably with a magnification of at least 8 x 50 or 10 x 50. The binoculars should have color-corrected coated lenses and a rectilinear field of view. Color correction can be checked by viewing a black and white pattern such as a Ringelmann card at a distance greater than 50 ft; no color rings or bands should be evident, only black and white. The rectilinear field of view can be tested by viewing a brick wall at a distance greater than 50 ft. There should be no distortion of the brick pattern as the field of view is changed. The binoculars are helpful for identifying stacks, searching the area for emissions and aid in characterizing behavior and composition of plume.

2.7 Camera and Accessories

A camera is often used in VE observations to document the emissions before and after the actual opacity determination. A 35-mm camera with through-the-lens light metering is recommended for this purpose. Useful accessories include a "macro" lens or a 250-mm to 350-mm telephoto lens, and a 6-diopter closeup lens (for photographing logbook and evidence of particulate deposition). A photo logbook is necessary for proper documentation, and the observer should always be sure to purchase enough fresh color negative film (ASA 100 recommended) for his/her purposes.

2.8 Clipboard and Accessories

For documenting the visible emission observation, the observer should have a 10 in. x 12 in. masonite or metal clipboard, several black ball-point pens (medium point), a large rubber band, and a sufficient number of visible emission observation forms.

2.9 Safety Equipment

The following safety equipment, which should be approved by the Occupational Safety and Health Association (OSHA), is recommended for the VE observer:

- Hard hat in high-visibility yellow or orange
- Safety glasses, goggles, or eye shields
- Ear protectors
- Safety shoes (steel-toed for general industrial use).

Specially insulated safety shoes are necessary in certain areas, such as the top of coke ovens.

Table 2.1. Activity Matrix for Procurement of Recommended Equipment and Supplies

Equipment	*Acceptance limits*	*Frequency and method of measurement*	*Action if requirements are not met*
Watch	*Continuous display*	*Check upon receipt*	*Return to supplier*
Compass	*Magnetic with 10° resolution*	*Check upon receipt*	*Return to supplier*
Range finder	*Accuracy of ±10% over distances to 1000 m*	*Check upon receipt and quarterly with targets at known distances of about 500 m and 1000 m*	*Adjust or return to supplier*
Abney level	*Accurate within ±5°*	*Check at 0° and 45°*	*Same as above*
Sling psychrometer	*Each thermometer accurate to 1/2°C (1°F)*	*Check thermometer accuracy with ice water bath at 0°C*	*Repair or return to supplier*
Binoculars	*Magnification of 8 x 50 or 10 x 50, color-corrected coated lenses and a rectilinear field of view*	*Check upon receipt by viewing selected objects*	*Return to supplier*
Camera	*35-mm camera with through-the-lens light metering*	*Check quality of photos on receipt and after processing film*	*Return to supplier for repair*
Clipboard/ accessories/forms	*10 in. by 12 in. clipboard; black ball-point pens; VE observation forms*	*Check supplies periodically*	*Replenish supplies*
Safety equipment	*Hardhat—yellow or orange, safety glasses and shoes, ear protectors*	*Check supply of safety equipment periodically*	*Maintain equipment availability*

3.0 Preobservation Operations

The following procedures are not required by Method 9 but are recommended in order to provide more consistent data collection and better data documentation and verification of representative plume viewing conditions. Not all procedures are needed for every observation.

Before making on-site VE determinations, the observer should gather the necessary facility data, provide prior notifications when applicable, establish an observation protocol, and check for availability of supplies and properly maintained equipment. Table 3.1 at the end of this section summarizes the quality assurance activities for preobservation operations.

3.1 Gather Facility Information

The observer should be thoroughly familiar with the source facility, operation, emissions, and applicable regulations. In preparation for the on-site visit, the observer should review the Agency's information (in the official source file) on the source in question. The observer should:

1. Determine the pertinent people to be contacted.
2. Become familiar with the processes and operations at the facility and identify those facilities to be observed.
3. Review the permit conditions, requirements, and recent applications.
4. Determine applicable emission regulations.
5. Identify all operating air pollution control equipment, emission points, and types and quantities of emissions.
6. Review history of previous inspections, source test results, and complaints.
7. Check the file to become familiar with (or review) plant layout and possible observation sites.
8. Determine normal production and operation rates.
9. Identify unique problems and conditions that may be encountered (e.g., steam plume).
10. Discuss with attorney if case development is expected.
11. Obtain a copy of the facility map with labeled emission points, profile drawings, and photographs, if available. A facility map is very helpful during inspection and should be a required item for every Agency source file. The map makes it easier for the observer to identify point sources and activities, and it may be used to mark any emission points that have been added or modified.
12. If an operating permit exists, obtain a copy because it may contain the VE limits for each point source and any special operating requirements.
13. Determine the status of the source with respect to any variance or exemption from the Agency's rules and regulations. Observation may not be required if the source has a variance or is exempt from the regulations.
14. Review plant terminology.
15. Use references such as facility maps and previous inspection reports to determine if the viewing position is restricted because of buildings or natural barriers. If the viewing position requires observations to be taken at a particular time of day (morning or evening) because of sun angle, consider this when planning the inspection.
16. Determine the possibility of water vapor in the plume condensing (see Section 3.12.6). This determination may prevent a wasted trip to the facility on days when a persistent water droplet plume is anticipated because of adverse ambient conditions.

Note: If the observer is not familiar with the type of facility or operation, he/she should consult available reference material and inspection manuals on the source category.

3.2 Prior Notification

The usual procedure is to make the VE determination without prior notification unless the plant must be entered first to obtain a good view of the emission point of interest. However, this procedure is not always possible, especially in remote locations, when operations are intermittent, or when specific personnel must be present or contacted. Determining VE for compliance with State Implementation Plan (SIP) or NSPS opacity regulations requires on-site observations during conditions of typical or normal maximum operations. If the facility is notified of the time of this evaluation, some operating conditions may be altered. If this situation appears likely, it is EPA's policy not to give prior notification. EPA is obligated to notify State/local agencies of inspections and generally prefers to invite the applicable agency to participate. The observer should notify the affected facility and control agencies as soon as practical following any official opacity readings.

3.3 Establish Observation Protocol

Based on information collected under Section 3.1 and any prior experience with the source, an observation protocol should be established. First, the observer should determine whether one, two, or more observers will be required. For example, two observers may be required to simultaneously make the VE determination and gather other on-site data (e.g., take photographs, draw a new modified facility map if one is not available from the plant or gather other needed plant information). In certain situations where the VE observations must be correlated to process operation, the second person will closely monitor the process activity and record the exact time of the operating modes of interest. Only one observer will make the VE determination unless an observer audit is being conducted. In this case, the designated observer is the one being audited.

The applicability of Method 9 (and hence the method of observation) should be determined. If Method 9 is not applicable, see Section 3.12.4, Special Problems.

A written checklist regarding an expected walk-through of the plant including questions to ask plant officials may be helpful.

3.4 Perform Equipment Checks for On-Site Use

Be sure that the necessary equipment and supplies are available for making the VE determination and documenting the results. All equipment should be visually checked for damage and satisfactory operation before each VE determination field trip.

Table 3.1. Activity Matrix for Preobservation Operations

Activity	*Acceptance limits*	*Frequency and method of measurement*	*Action if requirements are not met*
Gather facility information	*Obtain necessary facility data, Subsec 3.1*	*Check for completeness of data*	*Obtain missing data before on-site visit, if possible*
Make prior notification	*Make VE determination without prior notification except as stated in Subsec 3.2; EPA should notify State/local agencies and invite participation*	*Check the protocol for notification before each on-site visit and revise the protocol as necessary*	*Make required notifications*
Establish protocol	*Prepare observation protocol, Subsec 3.3*	*Check before on-site visit*	*Complete or prepare protocol as required*
Perform equipment check	*All equipment/supplies available and in satisfactory working order*	*Same as above*	*Replace or adjust equipment*

4.0 On-Site Field Observations

This section describes field observation procedures, including perimeter survey, plant entry, VE determination, and special observation problems. The latter subsection supplements the subsection on VE determination by providing some information on how to take VE readings when unfavorable field conditions prevent the use of the procedure described in Subsection 4.3 (e.g., when the emissions are intermittent or the observer position is restricted). The QA activities are summarized in Table 4.2 at the end of this section.

4.1 Perimeter Survey

Before and after the VE determination, it is strongly recommended that the observer make a perimeter survey of the area surrounding (1) the point of observation and (2) the emission point on which the determination is being made. Such a survey also may be made during the VE determination, if warranted.

A perimeter survey can be useful in determining the presence of other factors that could affect the opacity readings. For example, the representativeness of the VE readings for a given emission point could be questioned unless data is available to show that the observer excluded emissions related to material stockpiling, open burning, and ambient condensed water vapor in adjoining areas of the plant. It is vital that the observer be as aware as much as possible of extenuating conditions. The perimeter survey is made to document these conditions. Common sense should be used in determining the need and extent of the survey; in some cases (e.g., a single 350-foot stack) a perimeter survey is not vital.

Perimeter surveys can be made from either outside or inside the plant property, or both. This decision would depend on whether the VE observations are made from inside or outside of the plant, whether the observer actually gains entry to the plant premises, and whether the plant is sufficiently visible from outside the premises to make a reasonable survey. It is suggested that during the survey the observer should note such factors as:

1. Other stacks and emission points whose visible emissions might interfere with opacity readings.
2. Fugitive emissions that result from product or waste storage piles and material handling and may interfere with observations.
3. Fugitive emissions that result from unpaved road travel and may interfere with observations.
4. Water vapor emissions from sludge or cooling ponds.
5. Open burning.
6. Any unusual activities on or around plant premises that could result in nonrepresentative emissions or interfere with opacity readings.

If deemed useful by the observer, photographs may be taken to document extenuating conditions (see discussion of confidentiality and the use of cameras in Subsection 4.2.7).

4.2 Plant Entry

The following discussion presents the recommended plant entry procedures. The VE readings themselves should not be affected by a change in these procedures. However, the usefulness of the readings in showing a possible violation of the applicable standards may be compromised by not following agency procedures for entering plants. Depending on the location of emission points at the plant and the availability of observation points in the area surrounding a facility, the VE observer may not have to gain entry to the plant premises *prior* to making VE observations. It may be preferable to gain access after taking readings to check on plant process control equipment operating conditions or to complete a perimeter survey. Figure 4.1 is an example entry checklist that can be used to assist the observer in organizing the information that could be used at the time of plant entry.

To maintain a good working relationship with plant officials and, most importantly, to comply with the Clean Air Act and avoid any legal conflict with trespass laws or the company's right to privacy and due process of law under the U.S. Constitution, the observer must follow certain procedures in gaining entry to the plant's private premises. In most cases, consent to enter (or the absence of express denial to enter) is granted by the owner or company official. Figure 4.1 lists the pertinent section of the Clean Air Act on facility entry as well as information on confidentiality of process information. It is recommended that the inspector have a copy of this information available in case questions are raised by source representatives.

4.2.1 Entry Point — It is recommended that the plant premises be entered through the main gate or through the entrance designated by the company officials in response to prior notification. The observer's arrival will usually occur during normal working hours unless conditions contributing to excess opacity levels are noted at certain times other than normal working hours. If only a guard is present at the entrance, it is desirable for the observer to present the appropriate credentials and to suggest that the guard's supervisor be contacted for the name of a responsible company official. The observer would then ask to speak with this official, who may be the owner, operator, or agent in charge (including the environmental engineer).

4.2.2 Credentials — After courteously introducing himself/herself to the company official, the observer should briefly describe the purpose of the visit and present the appropriate credentials confirming that he/she is a lawful representative of the agency. Such credentials will naturally differ depending upon the agency represented, but it is recommended that they include at least the observer's photograph, signature, physical description (age, height, weight, color of hair and eyes), and the authority for plant entry. Agencies issue credentials in several forms, including letters, badges, ID cards, or folding wallets.

4.2.3 Purpose of Visit — When first meeting with a company official, the observer needs to be prepared to state succinctly the purpose of the visit, including the reason for the VE determination. Space is provided in the recommended form (Figure 4.1) to specify the exact purpose of the visit, and the observer can refer to this when talking with the company official.

Source name and address
DRI-HARD PORTLAND CEMENT
2 MILES E. OF RT. 1 ON
STATE RD. 1836
ROCKY HILLS, NJ 08916

Observer JUDY A. SMITH

Agency U.S. EPA
REGION II

Date of VE observation
5/5/82

Previous company contact (if applicable) GEORGE C. MEARS

Title OWNER

Purpose of visit EPA AUDIT INSPECTION AND VE OBSERVATION; REGIONAL OFFICE INSPECTS 10% OF MAJOR SOURCES IN NJ EVERY YEAR.

Emission points at which VE observations to be conducted
01 GRINDER 3-05-007-02 03 COAL-FIRED KILN 3-05-007-05
02 DRYERS #1 AND #2 3-05-007-02

Authority for entry (see reverse side)

Plant safety requirements

- ☒ Hardhat
- ☒ Safety glasses
- ☒ Side shields (on glasses)
- ☐ Goggles
- ☐ Hearing protection EARMUFFS (IN MARKED AREAS; PROVIDED BY PLANT)
  Specify _____
- ☒ Safety shoes (steel-toed)
- ☐ Insulated shoes
- ☐ Gloves
- ☐ Coveralls
- ☒ Dust mask suggested
- ☐ Respirator(s)
  Specify _____
- ☐ Other
  Specify _____

Company official contacted (on this visit) STANLEY O. GRAY

Title
ENVIRONMENTAL ENGINEER

Figure 4.1. Visible emission observer's plant entry checklist.

Authority for Plant Entry: Clean Air Act, Section 114

(a)(2) the Administrator or his authorized representative upon presentation of his credentials -

(A) shall have a right of entry to, upon or through any premises of such person or in which any records required to be maintained under paragraph (1) of this section are located, and

(B) may at reasonable times have access to, and copy of any records, inspect any monitoring equipment or methods required under paragraph (1), and sample any emissions which such person is required to sample under paragraph (1).

(b) (1) Each State may develop and submit to the Administrator a procedure for carrying out this section in such State. If the Administrator finds the State procedure is adequate, he may delegate to such State any authority he has to carry out this section.

(2) Nothing in this subsection shall prohibit the Administrator from carrying out this section in a State.

(c) Any records, reports or information obtained under subsection (a) shall be available to the public except that upon a showing satisfactory to the Administrator by any person that records, reports, or information, or particular part thereof, (other than emission data) to which the Administrator has access under this section if made public would divulge methods or processes entitled to protection as trade secrets of such person, the Administrator shall consider such record, report, or information or particular portion thereof confidential in accordance with the purposes of Section 1905 of Title 18 of the United States concerned with carrying out this Act or when relevant in any proceeding under this Act."

Confidential Information: Clean Air Act, Section 114 (see above) 41 ***Federal Register*** *36902, September 1, 1976*

If you believe that any of the information required to be submitted pursuant to this request is entitled to be treated as confidential, you may assert a claim of business confidentiality, covering all or any part of the information, by placing on (or attaching to) the information a cover sheet, stamped or typed legend, or other suitable notice, employing language such as "trade secret," "proprietary," or "company confidential." Allegedly confidential portions of otherwise nonconfidential information should be clearly identified. If you desire confidential treatment only until the occurrence of a certain event; the notice should so state. Information so covered by a claim will be disclosed by EPA only to the extent, and through the procedures, set forth at 40 CFR, Part 2, Subpart B (41 ***Federal Register*** *36902, September 1, 1976.)*

If no confidentiality claim accompanies this information when it is received by EPA, it may be made available to the public by EPA without further notice to you.

Figure 4.1. *Reverse side of form. (Continued)*

The principal purpose for an observer's visit to a plant will probably fall into one of three categories: (1) a VE determination is being made pursuant to a neutral administrative scheme* to verify compliance with an applicable SIP or NSPS, (2) a VE determination is being made because some evidence of an opacity violation already exists, or (3) an unscheduled VE determination has just been made from an area off the plant property. The statement of purpose should state clearly what has prompted the visit.

At this time, the observer also should provide the company official with a copy of the opacity readings and ask that person to sign an acknowledgment of receipt of any VE readings made previous to entry. In lieu of the above, the agency should provide a copy within a reasonable time.

4.2.4 Visitor's Agreements, Release of Liability (Waivers) — The observer should not sign a visitor's agreement, release of liability (waiver), hold-harmless agreement, or any other agreement that purports to release the company from tort liability. Signing this type of release form may waive the rights of the observer and his/her employer compensation in event of personal injury or damages; the precise effect of signing an advance release of liability for negligence depends upon the laws of the state in which it is signed. If the plant official denies entry for refusal to sign a release form, the observer should proceed as described in the section on entry refusal.

4.2.5 Section 114 — Section 114 of the Clean Air Act addresses both the authority for plant entry and the protection of trade secrets and confidential information. For the observer's reference, the applicable paragraphs are included on the reverse side of the entry checklist in Figure 4.1.

4.2.6 Entry Refusal — In the event that an observer is refused entry by a plant official or that consent is withdrawn before the agreed-upon activities have been completed, the following procedural steps should be followed:

1. *Tactfully* discuss the reason(s) for denial with the plant official; this is to insure that the denial has not been based on some sort of misunderstanding. Discussion might lead to resolution of the problem and the observer may be given consent to enter the premises. If resolution is beyond his/her authority, the observer should withdraw from the premises and contact his/her supervisor to decide on a subsequent course of action.
2. Note the facility name and exact address, the name and title of the plant officials approached, the authority of the person issuing the denial, the date and time of denial, the reason for denial, the appearance of the facility, and any reasonable suspicions as to why entry was refused.
3. The observer should be very careful to avoid any situations that might be construed as threatening or inflammatory. Under no circumstances should the potential penalties of entry denial be cited.

All evidence obtained prior to the withdrawal of consent is considered admissible in court.

*Any routine of selecting sites for observation that is not directed toward any company.

When denied access only to certain parts of the plant, the observer should make note of the area(s) and the official's reason for denial. After completing normal activities to the extent possible and leaving the facility, the observer should contact his/her supervisor for further instructions.

4.2.7 Confidentiality of Data — In conducting the VE investigation, the observer may occasionally obtain proprietary or confidential business data. It is essential that this information be handled properly.

The subject of confidential business information known as "a trade secret" is addressed in Section 114 of the Clean Air Act (see Subsection 4.2.5) and in the Code of Federal Regulations (40 CFR 2; 41 *Federal Register* 36902, September 1, 1976, as amended). The Code of Federal Regulations (40 CFR 2, Subpart B, 2.203) embodies a notice to be included in EPA information requests. This notice is paraphrased on the reverse side of the entry checklist (Figure 4.1) for the observer's and plant official's reference. The Code of Federal Regulations (40 CFR 2, Subpart B, 2.211) also includes the penalties for wrongful disclosure of confidential information by Federal employees, in addition to the penalties set forth in the United States Code, Title 18, Section 1905. Employees of other agencies should check with agency attorneys to determine their exact personal liability.

From the observer's standpoint, confidential information may be defined as information received under a request of confidentiality which may concern or relate to trade secrets. A trade secret is interpreted as an unpatented secret, commercially valuable plan, appliance, formula, or process used in production. This information can be in written form, in photographs, or in the observer's memory. *Emissions data* are not considered confidential information. Also the Agency reserves the right to determine if information submitted to it under an official request should be treated as confidential.

A good rule of thumb for the observer to follow is to collect only that process and operational information and to take only those photographs that are pertinent to the purpose of the plant visit. The plant official should be advised that he must *request* confidential treatment of specific information provided (see paragraph on claims of confidentiality on reverse side of entry checklist) before it will be treated as confidential pending legal determination. The plant official should inform the observer of any sensitive areas of the facility or processes where proprietary or trade secret information is indicated.

Photographs are often used to document visible emissions observations (see Subsection 4.3.4). Before taking photographs from inside the plant premises, the observer must have the consent of the plant official. Most of an observer's photographs will be of emission points only; presumably, these should not include confidential areas of the plant. If any opposition is encountered regarding the use of a camera on the plant premises, the observer should explain that the plant official should request confidential treatment of any photographs taken. The observer must properly document each photograph and handle those for which confidential treatment has been requested in the same manner as other confidential data. Photographic documentation of VE observations from an area of public access outside of the plant premises does not require approval from a plant official, provided the documentation is accomplished without the use of highly sophisticated equipment or techniques. For example, use of a high-power telephoto lens (over 100 mm on a 35 mm camera) that yields extensive details (e.g., construction layout) might be construed as surreptitiously taking confidential business information. Thus, a good rule of thumb is to be sure that any pictures taken show only the details that could be seen with the naked eye from an area accessible to the public.

When preparing to leave the plant, the observer should allow the plant official to examine the data collected and make claims of confidentiality. All potentially confidential information should be so marked, and while on the road, the observer should keep it in a locked briefcase or file container. It should be noted that emission data are not considered confidential.

When the observer returns to the agency office, the potentially confidential information should be placed in a secure, lockable file cabinet designated especially for that purpose. The observer's agency should have an established secure filing system and procedures for safeguarding confidential documents. In all cases, the observer should make no disclosure of potentially confidential information until a company has had full opportunity to declare its intentions regarding the information and the Agency has ruled that the information is not legally confidential.

4.2.8 Determination of Safety Requirements — The violation of a safety rule does not invalidate VE readings; however, the observer should always anticipate safety requirements by arriving at the plant with a hardhat, steel-toed safety shoes, safety glasses with side shields, and ear protectors. Safety equipment also should include any other equipment that is specified in the agency files and noted on the entry checklist form.

Some companies require unusual safety equipment, such as specific respirators for a particular kind of toxic gas. In many cases, these companies will provide the observer with the necessary equipment. In any event, the observer must be aware of and adhere to *all* safety requirements before entering the plant. Information on plant alarms and availability of first aid and medical help may be needed.

4.2.9 Observer Behavior — Observers must perform their duties in a professional, businesslike, and responsible manner. They should always consider the public relations liaison part of their role by seeking to develop or improve a good working relationship with plant officials through use of diplomacy, tact, and if necessary, gentle persuasion in all dealings with plant personnel.

Specifically, observers should *be objective and impartial* in conducting observations and interviews with plant officials. All information acquired during a plant visit is intended for official use only and should never be used for private gain. Observers must be careful never to speak of any person, agency, or facility in any manner that could be construed as derogatory. Lastly, observers should use discretion when asked to give a professional opinion on specific products or projects and should *never* make judgments or draw conclusions concerning a company's compliance with applicable regulations. Upon giving the data to the plant the observer can tell the source these are the data that were obtained and no judgment as to compliance can be made until all the data and the regulations are closely reviewed.

4.3 Visible Emission Determination

This subsection describes the preferred approach to VE determination. Because practical considerations do not always permit the observer to follow this procedure, however, special observation problems are discussed in Subsection 4.4.

4.3.1 Opacity Readings — The observer must be certified in accordance with Section 3.12.1, Subsection 1.3, and should use the following procedure for visually determining the opacity of emissions.

Observer Position

1. The observer must stand at a distance that provides a clear view of the emissions with the sun oriented in the 140° sector to his/her back. If the observer faces the emission/viewing point and places the point of a pencil on the sun location line such that the shadow crosses the observers position, the sun location (pencil) must be within the 140° sector of the line. During overcast weather conditions, the position of the sun is less important.
2. Consistent with number 1 above, when possible, the observer should, make observations from a position in which the line of vision is approximately perpendicular to the plume direction; when observing opacity of emissions from rectangular outlets (e.g., roof monitors, open baghouses, and noncircular stacks), the observer's position should be approximately perpendicular to the longer axis of the outlet.
3. When multiple stacks are involved, the observer's line of sight should not include more than one plume at a time, and in any case, during observations, the observer's line of sight should be perpendicular to the longer axis of a set of multiple stacks (e.g., stub stacks on baghouses).
4. The observer must stand at a distance that provides total perspective and a good view.
5. In order to comply with the sun angle requirements (see item 1) it is recommended that the observer should try to avoid the noon hours (11:00 a.m. to 1:00 p.m.) in the summertime (when the sun is almost overhead). This is more critical in the southern continental United States. The preferred reading distance is between 3 stack heights and 1/4 mile from the base of the stack.
6. The reading location should be safe for the observer.

Opacity Observations

1. Opacity observations must be made at the point of greatest opacity in that portion of the plume where condensed water vapor is not present.
2. The observer must not look continuously at the plume (this causes eye fatigue), but should observe the plume momentarily at 15-s intervals. A 15-s beeper is recommended to aid in performing the VE readings.
3. When steam plumes are attached, i.e., when condensed water vapor is present within the plume as it emerges from the emission outlet, the opacity must be evaluated beyond the point in the plume at which condensed water vapor is no longer visible. The observer must record the approximate distance from the emission outlet to the point in the plume at which the observations are made.
4. When steam plumes are detached, i.e., when water vapor in the plume condenses and becomes visible at a distinct distance from the emission outlet, the opacity of emissions should be evaluated near the outlet, prior to the condensation of water vapor and the formation of the steam plume; unless the opacity is higher after dissipation.
5. Readings must be made to the nearest 5 percent opacity. A minimum of 24 observations must be recorded. It is advisable to read the plume for a reasonable period in excess of the time stipulated in the regulations (i.e., at least 10 readings more than the minimum required).
6. A clearly visible background of contrasting color is best for greatest reading accuracy. However, the probability of positive error (higher values) is greater under these conditions. Generally, the apparent plume opacity diminishes and tends to assume a negative bias as the background becomes less contrasting.
7. It is recommended the observer wear the same corrective lenses that were worn for certification. If sunglasses were not worn during certification, the observer should remove them and allow time for the eyes to adjust to the daylight before making VE determinations. It is recommended that the observer not wear photo compensating sunglasses.
8. The best viewing spot is usually within one stack diameter above the stack exit, where the plume is densest and the plume width is approximately equal to the stack's diameter.

4.3.2 Field Data: The "Visible Emission Observation Form" — The 1977 revision of EPA Method 9 specifies the recording of certain information in the field documentation of a visible emission observation. The required information includes the name of the plant, the emission location, the type of facility, the observer's name and affiliation, the date, the time, the estimated distance to the emission location, the approximate wind direction, the estimated windspeed, a description of the sky conditions (presence and color of clouds), and the plume background.

Experience gained from past enforcement litigation involving opacity readings as primary evidence of emission standards violations has demonstrated a need for additional documentation when making visual determinations of plume opacity. The Visible Emission Observation Form presented in Figure 4.2 is recommended. This form was developed after reviewing the opacity forms used in EPA Regional Offices and State and local air quality control agencies. The form includes not only the data required by Method 9, but also the information necessary for maximum legal acceptability. Valid data can be collected on any form; however, the recommended form may enhance observer efficiency and data documentation. A detailed description of the use of the recommended form is given in the following paragraphs.

The Visible Emission Observation Form can be functionally divided into 11 major sections, as shown in Figure 4.3. Each section documents one or two aspects of the opacity determination. The form endeavors to cover all the required and recommended areas of documentation in a typical opacity observation. A "comments" section is included for notation of any relevant information that is not listed on the form.

VISIBLE EMISSION OBSERVATION FORM

SOURCE NAME: ADMIRAL POWER PLANT
ADDRESS: 112 OCEAN ROAD
CITY: ADMIRAL CITY | STATE: VA | ZIP: 23451
PHONE: 804-425-5101 | SOURCE ID NUMBER: NEDS 45721
PROCESS EQUIPMENT: OIL FIRED BOILER | OPERATING MODE: BASE LOAD
CONTROL EQUIPMENT: ELECTROSTATIC PRECIPITATOR | OPERATING MODE: RAPPING
DESCRIBE EMISSION POINT: START BRICK STACK 25' DIA. STOP ✓
HEIGHT ABOVE GROUND LEVEL: START 100' STOP ✓ | HEIGHT RELATIVE TO OBSERVER: START 100' STOP ✓
DISTANCE FROM OBSERVER: START 400' STOP ✓ | DIRECTION FROM OBSERVER: START NNE STOP ✓
DESCRIBE EMISSIONS: START LOFTING PLUME STOP ✓
EMISSION COLOR: START GREY/WHITE STOP ✓ | PLUME TYPE: CONTINUOUS ☑ FUGITIVE ☐ INTERMITTENT ☐
WATER DROPLETS PRESENT: NO ☑ YES ☐ | IF WATER DROPLET PLUME: ATTACHED ☐ DETACHED ☐
POINT IN THE PLUME AT WHICH OPACITY WAS DETERMINED: START 10' ABOVE STACK EXIT STOP ✓
DESCRIBE BACKGROUND: START SKY STOP w/BROKEN CLOUDS
BACKGROUND COLOR: START BLUE STOP BLUE/WHITE | SKY CONDITIONS: START CLEAR STOP PARTLY CLOUDY
WIND SPEED: START 15 MPH STOP 20 MPH | WIND DIRECTION: START SW STOP ✓
AMBIENT TEMP.: START 85°F STOP ✓ | WET BULB TEMP.: 54°F | RH, percent: 8.5%

Source Layout Sketch — Draw North Arrow

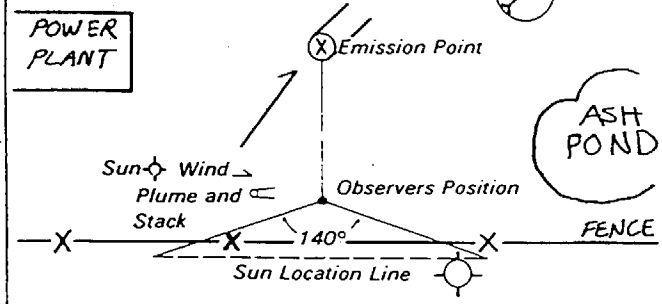

OBSERVATION DATE	START TIME	STOP TIME
15 JULY 1982	1330	1342

MIN \ SEC	0	15	30	45	MIN \ SEC	0	15	30	45
1	30	35	55	55	31				
2	55	50	40	30	32				
3	35	35	35	35	33				
4	30	35	35	35	34				
5	30	30	30	30	35				
6	35	35	35	35	36				
7	30	30	35	35	37				
8	35	40	60	55	38				
9	60	40	55	60	39				
10	50	45	35	30	40				
11	30	30	30	30	41				
12	30	30	30	30	42				
13					43				
14					44				
15					45				
16					46				
17					47				
18					48				
19					49				
20					50				
21					51				
22					52				
23					53				
24					54				
25					55				
26					56				
27					57				
28					58				
29					59				
30					60				

AVERAGE OPACITY FOR HIGHEST PERIOD: 40% | NUMBER OF READINGS ABOVE 40 % WERE: 11
RANGE OF OPACITY READINGS: MINIMUM 30% MAXIMUM 60%
OBSERVER'S NAME (PRINT): V.E. PROFFIT
COMMENTS: USES #6 OIL
OBSERVER'S SIGNATURE: V.E. Proffit | DATE: 15 JULY 1982
ORGANIZATION: STATE AIR POLLUTION CONTROL BOARD
I HAVE RECEIVED A COPY OF THESE OPACITY OBSERVATIONS
SIGNATURE: William P. Jance
TITLE: SHIFT MANAGER | DATE: 7-15-82
CERTIFIED BY: EASTERN TECHNICAL ASSOC. | DATE: 18 MAY 1982
VERIFIED BY: RDA | DATE: 15 AUG 1982

Figure 4.2. Visible emission observation form.

VISIBLE EMISSION OBSERVATION FORM

This form is designed to be used in conjunction with EPA Method 9, "Visual Determination of the Opacity of Emissions from Stationary Sources." Any deviations, unusual conditions, circumstances, difficulties, etc., not dealt with elsewhere on the form should be fully noted in the section provided for comments. Following are brief descriptions of the type of information that needs to be entered on the form; for a more detailed discussion of each part of the form, refer to the "User's Guide to the Visible Emission Observation Form."

**Source Name - full company name, parent company or division information, if necessary.*

**Address - street (not mailing) address or physical location of facility where VE observation is being made.*

Phone - self-explanatory.

Source ID Number - number from NEDS, CDS, agency file, etc.

**Process Equipment, Operating Mode - brief description of process equipment (include ID no.) and operating rate, % capacity utilization, and/or mode (e.g., charging, tapping).*

**Control Equipment, Operating Mode - specify control device type(s) and % utilization, control efficiency.*

**Describe Emission Point - stack or emission point location, geometry, diameter, color; for identification purposes.*

**Height Above Ground Level - stack or emission point height, from files or engineering drawings.*

**Height Relative to Observer - indicate vertical position of observation point relative to stack top.*

**Distance From Observer - distance to stack ±10%; to determine, use rangefinder or map.*

**Direction From Observer - direction to stack; use compass or map; be accurate to eight points of compass.*

**Describe Emissions - include plume behavior and other physical characteristics (e.g., looping, lacy, condensing, fumigating, secondary particle formation, distance plume visible, etc.).*

**Emission Color - gray, brown, white, red, black, etc.*

Plume Type:
Continuous - opacity cycle >6 minutes
Fugitive - no specifically designed outlet
Intermittent - opacity cycle <6 minutes

***Water Droplets Present - determine by observation or use wet sling psychrometer; water droplet plumes are very white, opaque, and billowy in appearance, and usually dissipate rapidly.*

***If Water Droplet Plume:*
Attached - forms prior to exiting stack
Detached - forms after exiting stack

***Point in the Plume at Which Opacity was Determined - describe physical location in plume where readings were made (e.g., 4 in. above stack exit or 10 ft after dissipation of water plume).*

**Describe Background - object plume is read against, include atmospheric conditions (e.g., hazy).*

**Background Color - blue, white, new leaf green, etc.*

**Sky Conditions - indicate cloud cover by percentage or by description (clear, scattered, broken, overcast, and color of clouds).*

**Windspeed - use Beaufort wind scale or hand-held anomometer; be accurate to ±5 mph.*

**Wind Direction - direction wind is from; use compass; be accurate to eight points.*

**Ambient Temperature - in °F or °C.*

***Wet Bulb Temperature - the wet bulb temperature from the sling psychrometer.*

***Relative Humidity - use sling psychrometer; use local U.S. Weather Bureau only if nearby.*

**Source Layout Sketch - include wind direction, associated stacks, roads, and other landmarks to fully identify location of emission point and observer position.*

Draw North Arrow - point line of sight in direction of emission point, place compass beside circle, and draw in arrow parallel to compass needle.

Sun Location Line - point line of sight in direction of emission point, place pen upright on sun location line, and mark location of sun when pen's shadow crosses the observers position.

***Comments - factual implications, deviations, altercations, and/or problems not addressed elsewhere.*

Acknowledgment - signature, title, and date of company official acknowledging receipt of a copy of VE observation form.

**Observation Date - date observations conducted.*

**Start Time, Stop Time - beginning and end times of observation period (e.g., 1635 or 4:35 p.m.).*

**Data Set - percent opacity to nearest 5%; enter from left to right starting in left column.*

**Average Opacity for Highest Period - average of highest 24 consecutive opacity readings.*

Number of Readings Above (Frequency Count) - count of total number of readings above a designated opacity.

**Range of Opacity Readings:*
Minimum - lowest reading
Maximum - highest reading

**Observer's Name - print in full.*

Observer's Signature, Date - sign and date after performing final calculations.

**Organization - observer's employer.*

**Certifier, Date - name of "smoke school" certifying observer and date of most recent certification.*

Verifier, Date - signature of person responsible for verifying observer's calculations and date of verification.

*Required by Reference Method 9; other items suggested.
**Required by Method 9 only when particular factor could affect the reading.

Figure 4.2. Reverse side of form. (Continued)

VISIBLE EMISSION OBSERVATION FORM

SOURCE NAME

ADDRESS

CITY — STATE — ZIP — (A)

PHONE — SOURCE ID NUMBER

PROCESS EQUIPMENT — OPERATING MODE — (B)

CONTROL EQUIPMENT — OPERATING MODE

DESCRIBE EMISSION POINT
START — STOP

HEIGHT ABOVE GROUND LEVEL — HEIGHT RELATIVE TO OBSERVER — (C)
START — STOP — START — STOP

DISTANCE FROM OBSERVER — DIRECTION FROM OBSERVER
START — STOP — START — STOP

DESCRIBE EMISSIONS
START — STOP

EMISSION COLOR — PLUME TYPE: CONTINUOUS ☐ — (D)
START — STOP — FUGITIVE ☐ INTERMITTENT ☐

WATER DROPLETS PRESENT — IF WATER DROPLET PLUME:
NO ☐ YES ☐ — ATTACHED ☐ DETACHED ☐

POINT IN THE PLUME AT WHICH OPACITY WAS DETERMINED
START — STOP

DESCRIBE BACKGROUND
START — STOP

BACKGROUND COLOR — SKY CONDITIONS — (E)
START — STOP — START — STOP

WIND SPEED — WIND DIRECTION
START — STOP — START — STOP

AMBIENT TEMP. — WET BULB TEMP. — RH,percent
START — STOP

Source Layout Sketch — Draw North Arrow

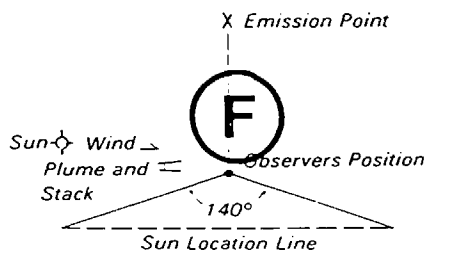

OBSERVATION DATE — START TIME — STOP TIME

MIN \ SEC	0	15	30	45	(I)	MIN \ SEC	0	15	30	45
1						31				
2						32				
3						33				
4						34				
5						35				
6						36				
7						37				
8						38				
9						39				
10						40				
11						41				
12						42				
13						43				
14						44				
15						45				
16						46				
17						47				
18						48				
19						49				
20						50				
21						51				
22						52				
23						53				
24						54				
25						55				
26						56				
27						57				
28						58				
29						59				
30						60				

AVERAGE OPACITY FOR HIGHEST PERIOD — (J) — NUMBER OF READINGS ABOVE % WERE

RANGE OF OPACITY READINGS — MINIMUM — MAXIMUM

OBSERVER'S NAME (PRINT)

COMMENTS — (G)

OBSERVER'S SIGNATURE — DATE

ORGANIZATION — (K)

I HAVE RECEIVED A COPY OF THESE OPACITY OBSERVATIONS
SIGNATURE

TITLE — DATE — (H)

CERTIFIED BY — DATE

VERIFIED BY — DATE

Figure 4.3. Functional sections of visible emission observation form.

Each major section of the form is discussed in the following text. A short explanation of each section's purpose, a background explanation of each data element, a description of the type of information being sought, and in some cases, appropriate entries are included. These discussions are keyed to Figure 4.3 by corresponding capital letters, and it is clearly indicated whether information is required or recommended.

A. SOURCE IDENTIFICATION. Provides information that uniquely identifies the source and permits the observer to locate or make contact with the source.

Source name		
Address		
City	*State*	*Zip*
Phone	*Source ID number*	

Source Name (Required) - include the source's complete name. If necessary for complete identification of the facility, the parent company name, division, or subsidiary name should be included.

Address (Required) - Indicate the street address of the source (not the mailing address or the home office address) so that the exact physical location of the source is known. If necessary, the mailing address or home office address may be listed elsewhere.

City, State, Zip, Phone (Recommended) - Self-explanatory.

Source ID Number (Recommended) - This space is provided for the use of agency personnel and should be used to enter the number the agency uses to identify that particular source, such as the State file number, Compliance Data System number, or National Emission Data System number.

B. PROCESS AND CONTROL DEVICE TYPE. Includes a several word descriptor of the process and control device, indication of current process operating capacity or mode, and operational status of control equipment.

Process equipment	*Operating mode*
Control equipment	*Operating mode*

Process Equipment (Required) - Enter a description of the process equipment that emits the plume or emissions to be read. The description should be brief but should include as much information as possible, as indicated in the following examples:

Coal-Fired Boiler
#2 Oil-Fired Boiler
Wood Waste Conical Incinerator
Paint Spray Booth
Primary Crusher
Fiberglass Curing Oven
Reverberatory Smelting Furnace
Basic Oxygen Furnace

Operating Mode (Recommended) - Depending on the type of process equipment, this information may vary from a quantification of the current operating rate to a description of the portion of a batch-type process for which the emission opacity is being read. For example, entries could include "90 percent capacity" for a boiler or "85 percent production rate" for the shakeout area of a grey iron foundry. For a steel making furnace, entries would include the exact part of the process for which readings are being made, such as "charging" or "tapping." In some cases, the observer may have to obtain this information from a plant official.

Control Equipment (Required) - Specify the type(s) of control equipment being used in the system after the process equipment in question (e.g., "hot-side electrostatic precipitator").

Operating Mode (Recommended) - Indicate the degree to which the control equipment is being utilized at the time of the opacity observations (e.g., 75% capacity, full capacity, shut down, off line) and the operating mode (e.g., automatic). The observer will probably have to obtain this information from a plant official.

C. EMISSION POINT IDENTIFICATION. Contains information uniquely identifying the emission point and its spatial relationship with the observer's position.

Describe emission point *Start* *Stop*			
Height above ground level		*Height relative to observer*	
Start	*Stop*	*Start*	*Stop*
Distance from observer		*Direction from observer*	
Start	*Stop*	*Start*	*Stop*

Describe Emission Point (Required) - Include the identifying physical characteristics of the point of release of emissions from the source. The description must be specific enough so that the emission outlet can be distinguished from all others at the source. In subsequent enforcement proceedings, the observer must be certain of the origin of the emissions that were being read.

Typical descriptions of the emission outlet include the color, geometry of the stack or other outlet, and the location in relation to other recognizable facility landmarks. Any special identification codes the agency or source uses to identify a particular stack or outlet should be noted along with the source code used by the observer. The source of this information should be recorded (e.g., plant layout map or engineering drawing).

Height Above Ground Level (Required) - Indicate the height of the stack or other emission outlet from its foundation base. This information is usually available from agency files, engineering drawings, or computer printouts (such as NEDS printouts). The information also may be obtained by using a combination of a rangefinder and an Abney level or clineometer. The height may also be estimated.

Height Relative to Observer (Required) - Indicate an estimate of the height of the stack outlet (or of any other type of emission outlet) above the position of the observer. This measurement indicates the observer's position in relation to the stack base (i.e., higher or lower than the base) and may later be used in slant angle calculations (see Section 3.12.6 and Subsection 4.4.6) if such calculations become necessary.

Distance From Observer (Required) - Record the distance from the point of observation to the emission outlet. This measurement may be made by using a rangefinder. If necessary, a map also may be used to estimate the distance.

It is important that this measurement be reasonably accurate if the observer is close to the stack (within 3 stack heights) because it is coupled with the outlet height relative to the observer to determine the slant angle at which the observations were made (see Figure 4.4). A precise determination of the slant angle may become important in calculating any positive bias inherent in the opacity readings.

Direction From Observer (Required) - Specify the direction of the emission point from the observer to the closest

of the eight points of the compass (e.g., S, SE, NW, NE) or 45°. Use of a compass to make this determination in the following manner is suggested: hold the compass while facing the emission *point*; rotate the compass until the North compass *point* lies directly beneath the needle (which will be pointing towards magnetic North); then the point of the compass closest to the emission outlet will indicate the direction (Figure 4.5). A map (plant layout) also may be used to make this determination.

Describe Emissions (Required) - Include both the physical characteristics of the emissions not recorded elsewhere on the form and the behavior of the resultant plume. The description of the physical characteristics might include terms such as lacy, fluffy, and detached nonwater vapor condensibles.

The terminology illustrated in Figure 4.6 can be used to describe plume behavior. The behavior can be used to determine the atmospheric stability on the day of the opacity observations.

Emission Color (Required) - Note the color of the emissions. The plume color can sometimes be useful in determining the composition of the emissions and will also serve to document the total contrast between the plume and its background as seen by the opacity observer during the observation period.

Plume Type (Recommended) - Check "continuous" if the duration of the emissions being observed is greater than 6 minutes. Check "intermittent" if the opacity cycle is less than 6 minutes. Check "fugitive" if the emissions have no specifically designated outlet.

Water Droplets Present (May be required) - Check "yes" or "no" as appropriate. In some cases, the presence of condensed water vapor in the plume can be easily observed. Plumes containing condensed water vapor (or "steam plumes") are usually very white, billowy, and wispy at the point of dissipation, where the opacity decreases rapidly from a high value (usually 100%) to 0 percent if there is no residual opacity plume contributed by contaminate in the effluent.

To document the presence or absence of condensed water vapor in the plume, the observer must address two points. First, is sufficient moisture present (condensed or uncondensed) in the plume initially? Second, if enough moisture is present, are the in-stack and ambient conditions such that it will condense either before exiting the stack or after exiting (when it meets with the ambient air)? The first question can be answered by examining the process type and/or the treatment of the effluent gas after the process. Some common sources of moisture in the plume are:

- Water produced by combustion of fuels,
- Water from dryers,
- Water introduced by wet scrubbers,
- Water introduced for gas cooling prior to an electrostatic precipitator, or other control device, and
- Water used to control the temperature of chemical reactions.

If water is present in the plume, data from a sling psychrometer, which measures relative humidity, in combination with the moisture content and temperature of the effluent gas can be used to predict whether the formation of a steam plume is a possibility (see Section 3.12.6).

If Water Droplet Plume: (May be required) - Check "attached" if condensation of the moisture contained in the plume occurs within the stack and the steam plume is visible at the stack exit. Check "detached" if condensation occurs some distance downwind from the stack exit and the steam plume and the stack appear to be unconnected.

Point in the Plume at Which Opacity was Determined (May be required) - Describe as succinctly as possible the physical location in the plume where the observations were made. This description is especially important in the case where condensed water vapor and/or secondary plume is present. For example, were the readings made prior to formation of the steam plume? If the readings were made subsequent to dissipation (e.g., in the case of an attached steam

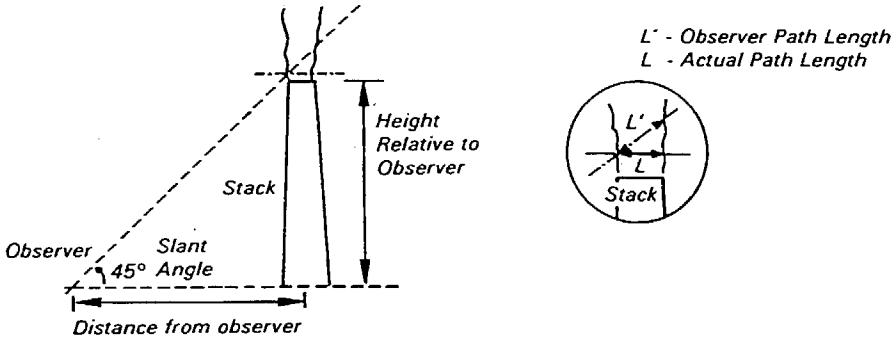

Figure 4.4. Slant angle relationships.

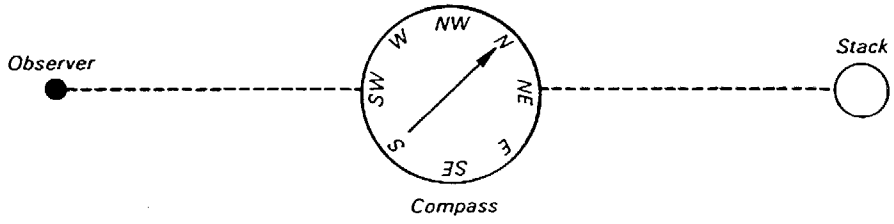

Figure 4.5. Direction from observer is NE.

D. EMISSIONS DESCRIPTION. Includes information that definitely establishes what was observed while making the visible emissions determination.

Describe emissions *Start* *Stop*	
Emission color *Start* *Stop*	*Plume type: Continuous* ☐ *Fugitive* ☐ *Intermittent* ☐
Water droplets present *No* ☐ *Yes* ☐	*If water droplet plume* *Attached* ☐ *Detached* ☐
Point in the plume at which opacity was determined *Start* *Stop*	

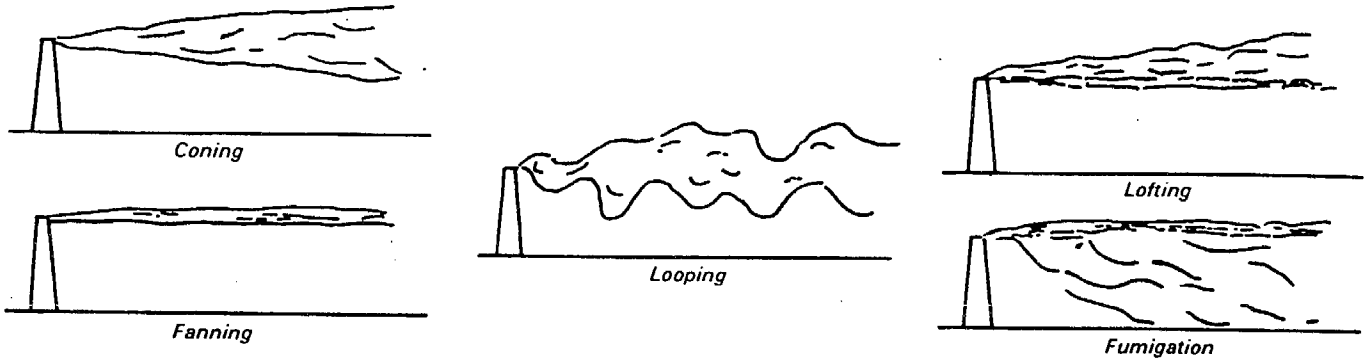

Figure 4.6. Plume behavior descriptors.

plume), then specify how far downwind of the dissipation point and how far downwind of the stack exit the reading was made. This information can be used to estimate the amount of dilution that occurred prior to the point of opacity readings. Descriptions such as 4 feet above outlet and 80 feet downstream from outlet, 10 feet after steam dissipation are appropriate.

Figure 4.7 shows some examples of the correct location for making opacity readings in various steam plume and secondary plume situations.

Describe Background (Required) - Describe the background that the plume is obscuring and against which the opacity is being read. While describing the background, note any imperfections or conditions, such as texture, that might affect the ease of making readings. Examples of background descriptions are roof of roof monitor, stand of pine trees, edge of jagged stony hillside, clear blue sky, stack scaffolding, and building obscured by haze.

Background Color (Required) - Accurately note the background color (e.g., new leaf green, conifer green, brick red, sky blue, and gray stone).

E. OBSERVATION CONDITIONS.
Covers the background and ambient weather conditions that occur during the observation period and could affect observed opacity.

Describe background *Start* *Stop*		
Background color *Start* *Stop*	*Sky conditions* *Start* *Stop*	
Windspeed *Start* *Stop*	*Wind direction* *Start* *Stop*	
Ambient temp. *Start* *Stop*	*Wet bulb temp.*	*Relative humidity*

Attached steam plume.

Detached steam plume. In rare cases, it may be necessary to make readings at the point of steam dissipation if the plume is more opaque at that point.

Plume from a sulfuric acid plant with detached steam plume. Plume is clear at stack exit. Secondary acid mist is formed in area of steam condensation.

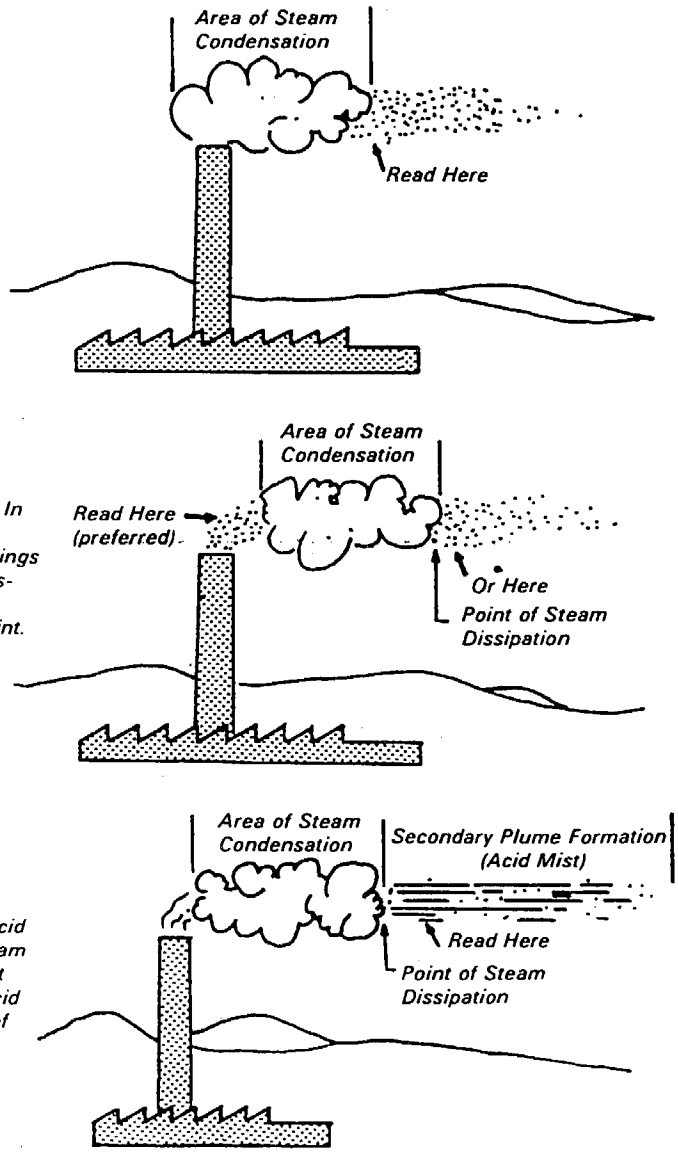

Figure 4.7. Location for reading opacity under various conditions.

Sky Conditions (Required) - Indicate the percent cloud cover of the sky. This information can be indicated by using straight percentages (e.g., 10% overcast, 100% overcast) or by description, as shown below.

Term	*Amount of cloud cover*
Clear	*<10%*
Scattered	*10% to 50%*
Broken	*50% to 90%*
Overcast	*>90%*

Windspeed (Required) - Give the windspeed accurately to ±5 miles per hour. The windspeed can be determined using a hand-held anemometer (if available), or it can be estimated by using the Beaufort Scale of Windspeed Equivalents in Table 4.1.

Wind Direction (Required) - Indicate the direction *from which* the wind is blowing. The direction should be estimated to eight points of the compass by observing which way the plume is blowing. If this type of estimation is not possible, the direction may be determined by observing a blowing flag or by noting the direction a few blades of grass or handfull of dust are blown when tossed into the air. Keep in mind that the wind direction at the observation point may be different from that at the emission point; the wind direction at the emission point is the one of interest.

Ambient Temperature (Required) - The outdoor temperature at the plant site is measured by a thermometer (in degrees Fahrenheit or centigrade) obtained from a local weather bureau or estimated. Be certain to note which temperature scale is used. This is done in conjunction with the wet bulb temperature and is only needed when there are indications of a condensing water droplet plume.

Wet Bulb Temperature (May be required) - Record the wet bulb temperature from the sling psychrometer. This is to be done only when there are indications of a condensing water droplet plume.

Relative Humidity (May be required) - Enter the relative humidity measured by using a sling psychrometer in conjunction with a psychrometric chart. This information can be used to determine if water vapor in the plume will condense to form a steam plume (see Section 3.12.6). If a sling psychrometer is not available, data from a *nearby* U.S. Weather Bureau can be substituted.

Table 4.1. *The Beaufort Scale of Windspeed Equivalents*

General description	*Specifications*	*Limits of velocity 33 ft (10 m) above level ground, mph*
Calm	*Smoke rises vertically*	*Under 1*
	Direction of wind shown by smoke drift but not by wind vanes	*1 to 3*
Light	*Wind felt on face; leaves rustle; ordinary vane moved by wind*	*4 to 7*
Gentle	*Leaves and small twigs in constant motion; wind extends light flag*	*8 to 12*
Moderate	*Raises dust and loose paper; small branches are moved*	*13 to 18*
Fresh	*Small trees in leaf begin to sway; crested wavelets form on inland waters*	*19 to 24*
	Large branches in motion; whistling heard in telegraph wires; umbrellas used with difficulty	*25 to 31*
Strong	*Whole trees in motion; inconvenience felt in walking against the wind*	*32 to 38*
	Twigs broken off trees; progress generally impeded	*39 to 46*
Gale	*Slight structural damage occurs (chimney pots and slate removed)*	*47 to 54*
	Trees uprooted; considerable structural damage occurs	*55 to 63*
Whole gale	*Rarely experienced; accompanied by widespread damage*	*64 to 75*
Hurricane		*Above 75*

F. OBSERVER POSITION AND SOURCE LAYOUT. Clearly identifies the observer's position in relation to the emission point, plant landmarks, topographic features, sun position, and wind direction.

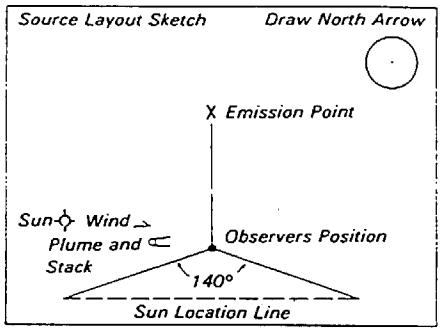

Source Layout Sketch (Required) - This sketch should include as many landmarks as possible. At the very least, the sketch should locate the relative position of the observed outlet in such a way that it will not be confused with others at a later date, and clearly locate the position of the observer while making the VE readings. The exact landmarks will depend on the specific source, but they might include:

- Other stacks
- Hills
- Roads
- Fences
- Buildings
- Stockpiles
- Rail heads
- Tree lines
- Background for readings

To assist in subsequent analysis of the reading conditions, sketch in the plume (indicate the direction of wind travel). The wind direction also must be indicated in the previous section.

Draw North Arrow (Recommended) - To determine the direction of north, point the line of sight in the source layout sketch in the direction of the actual emission point, place the compass next to the circle and draw an arrow in the circle parallel to the compass needle. A map (plant layout) may also be used to determine direction north.

Sun's Location (Recommended) - It is important to verify this parameter before making any opacity readings. The sun's location should be within the 140° sector indicated in the layout sketch; this confirms that the sun is within the 140° sector to the observer's back.

To draw the sun's location, point the line of sight in the source layout sketch in the direction of the actual emission point, place a pen upright along the "sun location line" until the

shadow of the pen falls across the observer's position. Then draw the sun at the point where the pen touches the "sun location line."

G. COMMENTS. Includes all implications, deviations, disagreement with plant personnel and/or problems of a factual nature that have bearing on the opacity observations and that cannot be or have not been addressed elsewhere on the form.

Comments

Comments (May be required) - Note all implications, deviations, disagreements with plant personnel, or problems of a factual nature that cannot be or have not been addressed elsewhere on the form. Examples of points to be included in this section are:

- Changes in ambient conditions from the time of the start of readings.
- Changes in plume color, behavior, or other characteristics.
- Changes in observer position and reasons for the change; a new form should also be initiated in this case so that a new source layout sketch may be drawn.
- Difficulties encountered in plant entry.
- Conditions that might interfere with readings or cause them to be biased.
- Drawing of unusual stack configuration (to show multiple stacks or stack in relation to roof line).
- Suspected changes to the emissions or process during observation.
- Unusual process conditions.
- Additional source identification information.
- Type of plant (if not specified elsewhere).
- Reasons for missed readings.
- Other observers present.

H. COMPANY ACKNOWLEDGEMENT. Company acknowledgement of, but not necessarily agreement with, the opacity observations stated on the form.

I have received a copy of these opacity observations	
Signature	
Title	*Date*

Signature (Recommended) - This space is provided for the signature of a plant official who acknowledges that he/she has received a copy of the observer's opacity readings. His/her signature does not in any way indicate that he/she or the company concurs with those readings.

Title (Recommended) - Include the acknowledging official's company title.

Date (Recommended) - The company official should enter the date of acknowledgment.

I. DATA SET. Opacity readings for the observation period, organized by minute and second. This section also includes the actual date and start and stop times for the observation period.

Observation date					*Start time*			*Stop time*		
M \ *s*	*0*	*15*	*30*	*45*	*M* \ *s*	*0*	*15*	*30*	*45*
1					*31*				
2					*32*				
29					*59*				
30					*60*				

Observation Date (Required) - Enter the date on which the opacity observations were made.

Start Time, Stop Time (Required) - Indicate the times at the beginning and the end of the actual observation period. The times may be expressed in 12-hour or 24-hour time (i.e., 8:35 a.m. or 0835); however, 24-hour time tends to be less confusing.

Data Set (Required) - Spaces are provided for entering an opacity reading every 15 s for up to a 1-hour observation period. The readings should be in percent opacity and made to the nearest 5 percent. The readings are entered from left to right for each numbered minute, beginning at the upper left corner of the left-hand column, labeled row "M 1" (minute 1) and column "s 0" (0 seconds). The next readings are entered consecutively in the spaces labeled M 1, s 15; M 1, s 30; M 1, s 45; M 2, s 0, M 2, s 15, etc.

If, for any reason, a reading is not made for a particular 15-second period, that space should be skipped and an explanation should be provided in the comments section. Also a dash (-) should be placed in the space which denotes that the space is not just an oversight.

J. DATA REDUCTION. Basic analysis of the opacity readings to allow preliminary compliance appraisal in accordance with EPA Reference Method 9.

Average opacity for highest period	*Number of readings above* % *were*
Range of opacity readings *Minimum*	*Maximum*

Average Opacity for the Highest Period (Required) - Enter the average of the sum of the highest 24 consecutive readings (6-minute set). In other words, identify the 24 consecutive readings that would sum to the greatest value and then divide this value by 24 to get the average opacity for that set of readings. *Note:* The average should not include a time lapse for which a valid reading could have been taken but was not (see Section 3.12.6).

Number of Readings Above ...% Were ... (Recommended) - Indicate an optional frequency count of the opacity readings above a particular value. The value is chosen according to the opacity standard for the emission point and is generally the actual value of the standard.

Method 9 does *not* specify the use of frequency counting to reduce data, but many States use it to determine compliance with their time exemption opacity standards. For example, a State regulation might specify that opacity of a specific type of emission source is not to exceed 20 percent for more than 3 minutes in an hour. If more than 12 readings out of 240 exceed 20 percent in an hour-long observation period, that State may consider that source out of compliance. For example,

14 readings out of 240 readings (1 hour) are above 20 percent opacity
14 x 15 s per reading = 210 s
= 3.5 minutes of readings above the standard.

Range of Opacity Readings (Required) - Enter the highest and lowest opacity readings taken during the specified observation period.

K. OBSERVER DATA. Information required to validate the opacity data.

Observer's name (print)	
Observer's signature	*Date*
Organization	
Certified by	*Date*
Verified by	*Date*

Observer's Name (Required) - Print observer's entire name.
Observer's Signature/Date (Recommended) - Self-explanatory.
Organization (Required) - Provide the name of the agency or company that employs the observer.

Certified By (Recommended) - Identify the agency, company, or other organization that conducted the "smoke school" or VE training and certification course where the observer obtained his/her most current certification.
Date (Required) - Provide the date of the most current certification.
Verified By (Recommended) - The actual signature of someone who has verified the opacity readings and calculations, usually the observer's supervisor, or the individual who is responsible for his/her work.
Date (Recommended) - Provide the date of verification.

4.3.3 Facility Operating Data - It is strongly recommended that a VE inspection/observation conclude with a source inspection if opacity values are in excess of the standard. The observer would first follow the plant entry procedure in Subsection 4.1 and then follow the indicated procedure to obtain facility operating data.

After the VE determination, it is recommended that the following source information be determined:

1. Were the plant and the source of interest operating normally at the time of the VE evaluation?
2. Are there any control devices associated with the source?
3. Were the control devices operating properly?
4. Have there been any recent changes in the operation of the process or control devices?
5. Have any malfunctions or frequent upsets in the process or control devices been noted and reported (if required by the agency)?
6. Is the plant operator aware of excessive visible emissions and have any corrective steps been taken to alleviate the problems?
7. Are there any other sources of visible emissions in close proximity to the source in question that may interfere with reading the plume opacity or contribute to the appearance of the plume?

4.3.4 Photographs - It is suggested that photographs be taken before and after the observation is made, not during the observation period. Conditions should be recorded as they existed at the time of the observation. The use of a 35-mm camera is recommended to ensure good photographs.

Each photograph should be identified with the date and time, the source, and the position from which the photograph was taken.

4.4 *Special Observation Problems*

The VE observer constantly should be aware that his/her observations may be used as the basis of a violation action and subject to questioning as to the reliability of the observations. Therefore, he/she must also be aware that under some conditions or situations it may be difficult or impossible to conduct a technically defensible visible emissions observation.

This section discusses some of the most prevalent difficult conditions or special problems associated with the visible emission observation. Each discussion is directed toward defining the problem, indicating how it might invalidate readings taken, and addressing possible solutions and/or ways to minimize the invalidating effects.

Not all of these discussions offer a complete solution for a particular problem; thus, it is important for the individual observer to keep in mind the purpose of the visible emission observation when considering exactly what action to take when faced with a special problem.

4.4.1 Positional Requirements - Valid VE evaluations can be conducted only when the sun is properly positioned at the observer's back. Failure to adhere to this positioning can result in significant positive bias caused by forward light scatter in opacity readings. Because of this overriding constraint, some times and locations make it difficult for the observer to meet other opacity reading criteria, e.g., reading the narrow axis of a rectangular stack, reading a series of stacks across a short axis to prevent multiple plume effects, and obtaining a contrasting background. Plant topography also may generate constraints that restrict viewing positions to one or more locations. The observer will be aided in determining the best observation location by following the criteria listed below.

1. Make sure that the emission point is north of the observation point.
2. Obtain a clear view of the emission point with no interfering plumes.
3. Be sure that rectangular stacks are read across the narrow axis and multiple stacks are read perpendicular to the line of stacks.
4. Minimize the slant angle by moving a sufficient distance from the stack or to an elevated position (see Subsection 4.4.4).
5. Find a contrasting background or a clear sky background.
6. Finally, determine the best time of day for observations based on the daily sun tracks at that location.

Collaborative studies of the performances of trained observers have indicated that, with the exception of the positive bias caused by having the improper sun angle, visible emission observation biases tend to be negative. Thus, if viewing conditions are not ideal and a negative bias (lower value) results, opacity readings may not provide the true measure of plume opacity required to correlate to mass emissions or control equipment efficiency. However, readings that indicate a violation can be regarded as the minimum opacity; therefore, documentation of the violation is valid.

In situations where the observer must make plume opacity readings when all the criteria for correct viewing cannot be met, all extenuating circumstances must be documented on the VE evaluation form.

4.4.2 Multiple Sources/Multiple Stacks - An observer is sometimes compelled to evaluate a stack that discharges emissions from more than one source or to evaluate a single source that has more than one emission point.

In the case where one stack serves more than one emission source, the observer may be able to isolate the emissions from one source as a result of intervals of operation, or by requesting the facility's cooperation in temporarily shutting down the other source(s). Otherwise, the observer should proceed with the VE observation and document the situation completely on the VE evaluation form.

In the case of multiple emission points for a single source (e.g., in positive-pressure baghouses and multiple vents in roof monitors), Section 2.1 of Method 9 directs the

observer to read multiple stacks independently if it is possible to do so while meeting sun position requirements. If it is necessary to get an overall reading for the group of stacks, the following set of formulas can be used to calculate this reading from the individual opacity values.

$$1 - \frac{O_1}{100} = T_1$$

$$1 - \frac{O_2}{100} = T_2$$

$$1 - \frac{O_N}{100} = T_N$$

$$T_1 \times T_2 \times .... T_N = T_T$$

$$100 \times (1 - T_T) = O_T$$

where
O_1 = % opacity of 1st plume
O_2 = % opacity of 2nd plume
O_N = % opacity of nth plume
T_1 = Transmittance of 1st plume
T_2 = Transmittance of 2nd plume
T_N = Transmittance of nth plume
T_T = Total transmittance
O_T = % total opacity

4.4.3 High Winds - Occasionally the crosswind conditions are unfavorable during field observations of plume opacity. When the winds are strong enough to shear the emissions at the stack outlet, it is difficult for the observer to make an accurate and fair VE observation. Strong crosswinds can have several effects on the plume:

1. The plume becomes essentially flattened and is no longer conical in shape thus the path length and apparent opacity increases.
2. The plume is torn into fragments and becomes difficult to obtain a representative reading.
3. The plume becomes diluted, and the apparent opacity is lowered.

The observer can compensate somewhat for the effect of flattening by reading the plume downwind of the stack, after it has reformed into a cone. The dilution effect of high winds, which lowers the apparent opacity, presents more of a problem. Because of the negative bias introduced, the effectiveness of Method 9 as a control tool under these conditions is diminished. If a violation is still observed under these conditions, it should be considered valid. It is recommended that whenever feasible, VE observations be suspended until the wind-caused interferences have abated.

4.4.4 Poor Lighting - Poor lighting conditions for VE observations usually involve one or more of the following: (1) a totally overcast sky, (2) early morning or late afternoon hours, or (3) nighttime. Each of these three lighting conditions has the same net effect on the plume; they differ slightly only in the cause of the poor illumination. When the amount of available sunlight is below a certain level, the contrast between a white plume and the background decreases. Therefore, readings are not recommended in either the early morning hours (at or approaching dawn) or late afternoon hours (at or approaching dusk).

Nighttime viewing obviously represents the most severe of poor lighting conditions. Some agencies have attempted, with mixed results, to use night vision devices (light intensification scopes) for plume viewing and testing in the dark. Others have achieved better results by placing a light behind the emissions, which provides a very high contrast background. For this method, it is important to select a source of light of moderate strength that does not cause the iris of the eye to close.

4.4.5 Poor Background - The color contrast between the plume and the background against which it is viewed can affect the appearance of the plume as viewed by an observer. Field studies have corroborated predictions of the plume opacity theory by demonstrating that a plume is most visible and has the greatest apparent opacity when viewed against a contrasting background.

Consistent with these findings is the fact that with a high contrast background, the potential for positive observer bias is the greatest. However, field trials consisting of 769 sets of 25 opacity readings each have shown that for more than 99 percent of the sets, the positive observer error was no greater than 7.5 percent opacity.[2]

Also consistent with these findings is the fact that as the contrast between the plume and its background *decreases,* the apparent opacity decreases; this greatly increases the chance for a negative observer bias. Under these conditions, the likelihood lessens of a facility being cited for a violation of an opacity standard because of observer error.

When faced with a situation where there is a choice of backgrounds, the observer should always choose the one providing the highest contrast with the plume because it will permit the most accurate opacity reading. However, if a situation arises where other constraints make it impossible to locate an observation point that provides a high contrast background, the observer may read against a less contrasting one with confidence that a documented violation should be legally defensible.

4.4.6 Reduced Visibility - Environmental factors at the time of observation also are of concern to the visible emissions observer. Environmental considerations include rain, snow, or other forms of precipitation, and photochemical smog buildup, fog, sea spray, high humidity levels, or any other cause of haze. These environmental factors create a visual obscuration that can increase the apparent opacity of the plume, but more commonly reduce the background contrast and thus decrease the apparent opacity.

In recognition of the problems that could result from reduced visibility caused by environmental factors, the amended Method 9 (November 12, 1974) states, in paragraph 2.1 of the Procedures Section: "The qualified observer shall stand at a distance sufficient to provide a clear view of the emissions ..." A "clear view" must be interpreted as a view free from obstacles or interferences. Most problems caused by reduced visibility can be alleviated simply by making the observations on another day.

4.4.7 Tall Stacks/Slant Angle - When an observer's distance from the stack approaches 1/4 mile (approximately 1300 feet, or a little over four football fields), the ambient light scattering may begin to have an adverse effect on the contrast between the plume and the background. Also, if the sky is overcast or hazy on the day of observation, the farther the observer is from the emission point, the more the haze interferes with the view of the plume and hence, the less reliable the readings.

On the other hand, the recommendation that the observer stand at least three stack heights from the stack being observed is intended to ensure that the width of the plume as it is viewed is approximately the same as it is at the stack outlet. As the observer gets closer to the stack and the viewing (slant) angle

increases, the observed path length also increases; this causes the observed opacity to increase because the observer is reading through more emissions. These relationships are shown in Figure 4.8. At an observer distance of three stack heights, which corresponds to a slant angle of 18°, the deviation of observed opacity from actual opacity decreases to 1 percent opacity, which is considered acceptable (see Section 3.12.6).

The three-stack-heights relationship only occurs if the observer and the base of the stack are in the same horizontal plane. If the observer is on a higher plane than the base of the stack, then the minimum distance for proper viewing can be reduced to *less* than three stack heights; conversely, if the observer's plane is lower than that of the stack base, then the minimum suggested distance will be *greater* than three stack heights (see Figure 4.8). The real determining factor is the slant angle. To assure no more than a 1 percent opacity deviation of observed opacity from actual opacity, the observer must have a visual slant angle of 18° or less.

4.4.8 Steam Plumes - Under certain conditions, water vapor present in an effluent gas stream will condense to form a visible water droplet or "steam" plume. Because the NSPS (specifically Method 9) and almost all SIP's exclude condensed, uncombined water vapor from opacity regulations, the VE observer must be careful that he/she does not knowingly read a plume at a point where condensed water vapor is present and record the value as representative of stack emissions.

Knowledge of the kind of process that generates the emissions being read and simple observation of the resultant plume almost always allows the observer to determine if a steam plume is present. Steam plumes are commonly associated with processes or control equipment that introduce water vapor into the gas stream. These sources include:

- Fuel combustion,
- Drying operations,
- Wet scrubbers,
- Water-induced gas cooling prior to an emissions control device, and
- Water-induced chemical reaction cooling.

Also, observation of steam plumes will reveal that they are usually very white, billowy, and have an abrupt point of dissipation. At the point of dissipation, the opacity generally decreases *rapidly* from a high value (usually 100%) to a low value. Depending on the moisture and temperature conditions in the stack and in the ambient air, steam plumes may be either "attached" or "detached." An attached steam plume forms within the stack and is visible at the exit; a detached steam plume forms downwind of the stack exit and does not appear to be connected to the stack. In cases when it is not clear whether a steam plume is present or when an observer would like to predict the formation of a steam plume, the stack gas conditions may be used in conjunction with the ambient relative humidity to make the prediction (see Section 3.12.6).

When a steam plume *is* present, the particulate plume is read at a point where 1) no condensed water vapor exists, and 2) the opacity is the greatest. In the case of a detached steam plume, this point is usually at the stack exit, prior to the water vapor condensation; in the case of an attached steam plume, it is usually slightly downwind of the point of steam plume dissipation (for examples, see Figure 4.7). The observer should always carefully document the point chosen.

4.4.9 Secondary Plume Formation - Some effluent gas streams contain species that form visible mists or plumes by a physical and/or chemical reaction that occurs either at some point in the stack or after the emissions come in contact with the atmosphere. This situation is known as secondary plume formation. Examples of such secondary plume formation include:

- A change in the physical state of a compound condensing from a gas into a liquid, such as vaporized hydrocarbon condensing into an aerosol or a solid.
- A physiocochemical reaction between two or more gaseous (or in some cases, liquid) species in a plume, such as the condensation of ammonia, sulfur dioxide, and water vapor to form

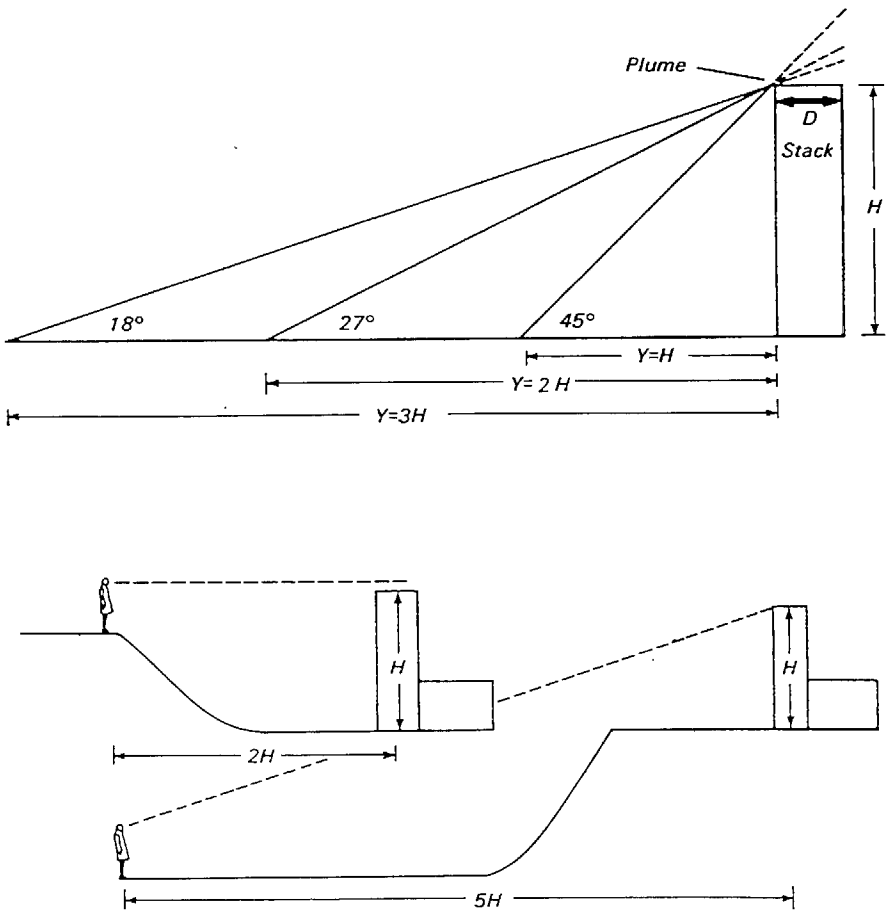

Figure 4.8. Observer distance, observed path length relationships.

particulate ammonium sulfite or the condensation of sulfur trioxide and water vapor to form sulfuric acid mist.
- A physiocochemical reaction between species in a plume and species in the atmosphere, such as the formation of N_2O_3.

Secondary plumes are sometimes found in the following processes (with these suspected secondary reactions):
- Coal- and oil-fired cement kilns ($SO_3 + H_2O \rightarrow H_2SO_4$ mist) or [$NH_3 + SO_2 + H_2O \rightarrow (NH_4)_2 SO_3$]
- Fossil-fuel-fired steam generators ($SO_2 + H_2O \rightarrow H_2SO_4$ mist)
- Sulfuric acid manufacturing ($SO_3 + H_2O \rightarrow H_2SO_4$ mist)
- Plywood and particleboard wood heating (organic vapor → organic mist)
- Glass manufacturing (inorganic vapor → organic aerosol).

As in the case of steam plumes, secondary plumes can be attached or detached, depending on the specific condensation reaction and the ambient conditions. For example, a secondary plume will be attached if a reaction between plume species occurs in the stack and the stack temperature is sufficiently low to cause condensation of the reaction products to a visible liquid or solid phase. A detached secondary plume will be evident when the reaction does not occur until the gas stream comes in contact with the atmosphere. The degree of detachment depends on the ambient conditions, the degree of mixing between the effluent and the atmosphere, and the specific reaction(s) involved.

Secondary plumes may occur with or without an accompanying steam plume, and it is important that the observer be able to distinguish between the two. Unlike steam plumes, secondary plumes are often persistent (they do not dissipate rapidly), are usually bluish white (due to the fine particles present), and are grainy rather than billowy.

To read a secondary plume, the observer must locate the densest point of the plume where water vapor is not evident and make the readings at that point. This point may occur in several different areas, depending on the type of secondary plume. An attached secondary plume will usually be read at the stack exit if an attached *steam* plume is not present; if an attached steam plume *is* present, the secondary plume must be read at the point of steam dissipation. A detached secondary plume will usually be read slightly downwind of the area of formation, assuming there is no interfering condensed water vapor. Under some conditions, a secondary plume may not fully condense until some distance downstream of the point of formation; in this case, the observer simply looks for the densest area of the plume and makes the reading at that point. It is especially important in reading a secondary formation plume to describe fully the point at which the reading was taken and the exact appearance of the plume. (Refer to Figure 4.7 for one example of where to read a secondary plume.)

4.4.10 Fugitive Emissions - Fugitive emissions are those emissions that do not emanate from a conventional smoke stack or vent. Examples of these nonconventional emissions include:
- Dusty or unpaved roads
- Stock or raw material piles under windy conditions or when moved by machinery
- Conveyor belts, pneumatic lifts, clamshells, and draglines
- Cutting, crushing, grinding, and sizing of minerals or other materials
- Plowing, tilling, and bulldozing
- Open incineration
- Demolition activities
- Roof monitors or building vents, especially in foundries, iron and steel facilities, and related industries.

Because of the irregular shape of their emission point or area, conducting a conventional Method 9 test on fugitive emissions may appear difficult; however, it usually involves only relatively minor adjustments. Commonly used procedures for observation of fugitive emissions are listed below:
1. If possible, isolate the particular emission from other emissions by choosing an appropriate position for observation.
2. Adhere to the lighting requirements of Method 9 by keeping the sun in the 140° sector to the observer's back.
3. Also adhere to Method 9 in selecting a position with regard to wind direction and a contrasting background.
4. Whenever possible, select the shortest path length through the plume.
5. Before taking readings, view the emission for several minutes to determine its characteristics. Changes that may occur in the airborne particulate pattern over time are important to note and to consider in selecting a viewing point.
6. Select the line of sight and the viewing point in the emissions so that, on the average, the densest part of the emissions will be observed. It is recommended that all subsequent readings in a data set be taken at the same relative position to the emission source.
7. The configuration of the emission point or area may necessitate taking readings at a point downwind where the emissions have assumed a more conventional plume shape.
8. If the plume cannot be viewed through a nearly perpendicular angle, corrections may be necessary.

4.4.11 Intermittent Sources - Some sources release visible emissions intermittently rather than continuously; e.g., coke ovens, batch operations, single chamber incinerators, malfunctioning control equipment (in rapping, bag shaking, etc.), boilers during soot blowing, and process equipment during startup.

Intermittent emissions may have a high opacity for a short time and a low or negligible opacity at other times. This high-low cycle may be repeated at fairly regular intervals. If a source is in violation (or in continuous compliance) of the applicable standard over the 6-minute averaging time required by Method 9, it does not pose a problem to the visible emissions observer. If the pollutant-emitting operational cycle of a source is less than 6 minutes in duration, however, that source may be out of compliance only for a portion of each 6-minute averaging period, which will make it difficult or impossible to document a violation if the data is to be reduced to a 6-minute average.

If the source is not covered by a NSPS or a State Implementation Plan that specifies the explicit use of Method 9 or another specified modification to Method 9, another technique for reading intermittent emissions of less than a 6-minute duration is to use Method 9 procedures but reduce the averaging time to about 3 minutes. This reduction will allow the observer to tally the number of 3-minute violations that occur. Analysis of many data sets has confirmed that using this method sacrifices little or no accuracy.

In all cases where sources are not subject to NSPS or other federally promulgated standard, the existing State regulations and specified opacity observation methods (if any) must be used. Two other techniques that have been used to document intermittent emissions are the "stopwatch" technique (measuring the total accumulated time that the opacity exceeds the applicable standard) and the time-aggregate data reporting technique (taking readings every 15 seconds, tallying the number of readings exceeding the standard, and multiplying this number by 15 seconds to determine the amount of time the source is out of compliance during the observation period). Many State agencies use these latter techniques, and have adopted their methods in their SIP rules and regulations. EPA currently has studies underway to evaluate the accuracy and reliability of these nonaveraging techniques.

Table 4.2. Activity Matrix for Visible Emission Determination

Activity	*Acceptance limits*	*Frequency and method of measurement*	*Action if requirements are not met*
Perimeter survey	*Completed perimeter survey*	*Prior to, following, and during (if warranted) the VE determination*	*N/A*
Plant entry	*Observer should follow protocol as suggested in Subsec 4.2 and adhere to confidentiality of data*	*Entry prior to taking VE readings only if necessary; entry after VE readings to provide plant representative with data and/or to obtain necessary plant process data*	*N/A*
VE Determination			
1. Position	*In accordance with Subsec 4.3.1*	*Take a position for observation as described in Subsec 4.3.1 and document on data form*	*Follow instructions under special problems (Subsec 4.4) when a proper position cannot be assumed*
2. Observations	*Taken in accordance with Subsec 4.3.1*	*Make VE determination as described in Subsec 4.3.1*	*As above*
3. Field data: VE observation form	*Completed data form*	*Complete data form as per instructions and examples in Subsec 4.3.2*	*Complete missing data (if possible) or give rationale for incomplete data*
4. Facility operating data	*Pertinent process data obtained*	*After VE observations, obtain facility data per Subsec 4.3.3*	*Data must be obtained as soon as possible after VE observation*
Special observation problems	*N/A*	*Refer to Subsec 4.4 when conditions do not permit VE observation under proper position, etc.*	*N/A*

N/A = not applicable.

5.0 Postobservation Operations

Table 5.1 at the end of this section summarizes the quality assurance activities for postobservation operations. These activities include preparation of reports and data summaries and validation.

5.1 Data Summary

The opacity observations are recorded on data forms such as those shown in Figures 4.1 and 4.2. Figure 5.1 is a summary data form for manual calculations. This form and the calculation procedures are discussed in detail in Section 3.12.6. It is recommended, however, that a computer be used when reducing large quantities of data and to avoid calculation errors.

5.2 Reporting Procedures

Recording opacity observation data on a three-part form is most convenient. One part can be given to the appropriate facility personnel immediately following the on-site field observation if this is the agency policy or procedure, one part should be given to the Agency, and one part should be maintained in the observer's file. The data form should be completed on-site, and it should be signed by the observer, the facility representative (if applicable), and the data validator. All corrections must be initialed. The file copy should be signed by the data validator.

Inspection forms alone may not be adequate for documenting an enforceable violation and can be supplemented by a narrative report. It is recommended that a summary report be made containing the following information:

1. Name and location of facility, date and time of inspection, name of inspector, and name of company official(s) contacted.
2. Brief description of the specific process information gathered,

Company Admiral Power Plant Date 15 July 1982 Location 12 Ocean Rd., Admiral City, Va.
Start time 1330 Emission point Oil Fired Boiler

Start no.	Total opacity	Average opacity	Start no.	Total opacity	Average opacity	Start no.	Total opacity	Average opacity	Start no.	Total opacity	Average opacity	Start no.	Total opacity	Average opacity	Start no.	Total opacity	Average opacity
1	885	36.8	37			73			109			145			181		
2	885	36.8	38			74			110			146			182		
3	880	36.6	39			75			111			147			183		
4	860	35.8	40			76			112			148			184		
5	840	35.0	41			77			113			149			185		
6	845	35.2	42			78			114			150			186		
7			43			79			115			151			187		
8			44			80			116			152			188		
9			45			81			117			153			189		
10			46			82			118			154			190		
11			47			83			119			155			191		
12			48			84			120			156			192		
13			49			85			121			157			193		
14			50			86			122			158			194		
15			51			87			123			159			195		
16			52			88			124			160			196		
17			53			89			125			161			197		
18			54			90			126			162			198		
19			55			91			127			163			199		
20			56			92			128			164			200		
21			57			93			129			165			201		
22			58			94			130			166			202		
23			59			95			131			167			203		
24			60			96			132			168			204		
25			61			97			133			169			205		
26			62			98			134			170			206		
27			63			99			135			171			207		
28			64			100			136			172			208		
29			65			101			137			173			209		
30			66			102			138			174			210		
31			67			103			139			175			211		
32			68			104			140			176			212		
33			69			105			141			177			213		
34			70			106			142			178			214		
35			71			107			143			179			215		
36			72			108			144			180			216		

Maximum average 36.8 % Start number of six minute average 1
Number of nonoverlapping averages in excess of standard 3 Listing start number of these averages 1, 12, 80, 175
Calculated by V.E. Proffit Date 16 JULY 1982 Reviewed by I.M. REVIEWER Date 17 JULY 1982

Figure 5.1 Visible emission summary data sheet.

particularly any unusual occurrences.
3. Description of the equipment that was inspected and its operating mode at the time of inspection.
4. Notation of any excessive emissions seen and corresponding data from opacity continuous emissions monitor if available.
5. Explanation of excessive emissions, if available, and corrective actions being taken.
6. Summary of emission points *not* in compliance.
7. Recommendations for followup action.

One copy of the report, an updated plot plan, photographs, and other pertinent data should be placed in the Agency file. Whenever a violation is noted, it is EPA policy to notify the facility of the alleged violation and to permit them to review the evidence against them in a meaningful way. The importance of a good file cannot be overstated. This file represents the official Agency documentation of compliance history, the latest information on the source's operation and compliance status. The file also provides the means of communicating source conditions to other staff members. A thorough and accurate historical record on source inspections and opacity readings is essential to good operation and any necessary compliance/enforcement actions.

5.3 Data Validation

All opacity observation data obtained for compliance determination should be validated by senior staff assigned this responsibility. Data validation procedures are described in References 16 and 17. These data should be checked to the extent possible for their completeness, the correctness of source, the emission point and description, the background, and the process and control equipment in use. The calculation of the average opacities and highest average opacity also should be checked. All calculation checks should agree within acceptable roundoff errors. If possible, any questionable data should be reviewed with the observer. Ideally the data validation should occur as soon as possible after the observations are recorded so that questions may be resolved. Any other calculations made for the purpose of supporting the data (e.g., the effect of angle of observation on the observed opacity) should also be verified. *Note:* Any corrections in the data must be forwarded to all interested parties so that they may correct their records (a data form should have been given to them after the opacity observations were completed).

5.4 Equipment Check

A check of the equipment following the opacity observations helps to ensure the quality of the data. Any indication of equipment damage/malfunction should be recorded on an equipment log and noted for purposes of data validation. The malfunctioning equipment should be repaired, adjusted, or replaced so that the equipment will be available for subsequent on-site field observations.

Table 5.1. Activity Matrix for Postobservation Operations

Activity	*Acceptance limits*	*Frequency and method of measurement*	*Action if requirements are not met*
Data summary	*Completed data form*	*See Subsec 3.12.6 for instructions for calculations*	*Complete the data summary*
Reporting procedures	*Completed report and data forms*	*Use 3-part form as suggested in Subsec 5.2*	*Complete the necessary data forms and reporting procedure*
Data validation	*All checks should agree within acceptable roundoff error*	*Make data validation check as soon as possible after VE observation*	*Forward all corrections of the data/calculations to the interested parties*
Equipment check	*All equipment/apparatus should be checked for satisfactory operation after each VE observation day*	*Check equipment for damage/malfunctions*	*Note on equipment log and repair, adjust or replace the equipment*

6.0 Calculations

Three types of calculations are described in this section: (1) the calculation of the average opacity for the specified time period (usually 6 min, or 24 observations recorded at 15-s intervals), (2) the calculation of the path length through the plume (seldom needed), and (3) the prediction of steam plume formation (seldom needed). In the first calculation, the 6-min running (or rolling) averages may be required. To minimize errors in the calculations, another individual should check all calculations for each VE determination for compliance. If a difference greater than a typical roundoff error is detected, the corrections should be made and initialed by the one making the correction. Table 6.3 at the end of this section summarizes the quality assurance activities for these calculations.

6.1 Calculation of Average Opacity

Figure 6.1 shows actual opacity data taken at one company (unspecified) for two 6-min periods. *Note:* Any corrections made by an observer must be initialed and the corrected value used in the computation of an average. The calculations can be checked by obtaining the row and column subtotals; the totals of these subtotals must be identical.

Running 6-min averages are calculated from data on Figure 6.2 and reported as described below. Running averages can include a time-lapse break in opacity readings when caused by an element that makes taking a valid reading difficult (e.g., fugitive emissions, improper background, or process shutdown). Running averages should not contain time-lapse breaks in the readings as a result of the observer's desire not to take visible emission data for personnel reasons when conditions exist that would allow the observer to take valid opacity data (e.g., eye strain or no desire to continue readings). Figure 6.3 is included to provide an easy reference between the VE reading time on Figure 6.1 and the start number on Figure 6.2. The start numbers are used to find the corresponding observation time for the beginning of the calculated six minute average.

Determination of the running average is generally performed by computer or by a hand calculator. The main purpose of the calculations is to determine the number of 6-min periods in excess of the standard and the greatest value for any 6-min period. It is also suggested, but not required, that the opacity readings be plotted on a graph showing percent opacity versus time, with a straight line connecting each subsequent reading.

6.1.1 Use of Computer for Calculations - It is highly recommended that a computer be used to calculate and plot data. Programming will vary with the language used by the particular computer, but the basic principle is as follows:

Input:

1. Enter all VE readings with their corresponding start number or identifying start time.

Computation:

1. The first average opacity reading is obtained by averaging the first 24 opacity readings.
2. Each succeeding running average is obtained from the previous one by adding the next observation reading and subtracting the first observation in the series and then dividing by 24 (assuming 6-min running average).

Printout

1. The computer should print all VE readings with their corresponding number or time. This printing will ensure that all readings have been entered properly.
2. The computer should search all averages and print the highest average opacity and its corresponding number or time interval.
3. Starting at the first interval, the computer should search for all nonoverlapping 6-minute periods in excess of the standard. Each interval's average opacity value and corresponding number or time should be printed out.
4. Finally the computer should plot VE readings versus time intervals. If the computer has a plotter, it should be used. If not, the values can be plotted without connecting lines. If desired, the computer can bracket intervals in excess of the standard.

6.1.2 Use of Hand Calculator for Calculations - When a hand calculator is used, the calculation procedures are the same as those for the computer, except that they must be performed manually. All data should be recorded on the VE Summary Data Sheet (see Figure 6.2) if desired. To avoid calculating average opacity values that are less than the standard, the following procedure can be used. The total value for the 24 readings should be calculated first, and the total opacity should be entered at Start no. 1.

Each succeeding total value can be obtained and recorded by adding the difference between the value dropped and the one added. These calculations can be performed easily without a calculator. If desired, the average opacity reading could then be calculated only for those totals that exceed the total allowable opacity limit (e.g., 20% x 24 = 480). Therefore, a total opacity of 480 or greater would be an exceedance of a 20 percent opacity standard. Method 9 does, however, require that the accuracy of the method be taken into account when determining possible violations of applicable opacity standard.

It is suggested that when the opacity standard has been exceeded for any 24 consecutive readings, the data be hand-plotted with each VE reading versus its time interval. These plots fit best on graph paper scaled 10 lines to the inch. Each 15-second reading can be plotted at 1/2 spacing, thereby allowing 20 readings per inch. If desired, intervals of opacity in excess of the standards can be marked on this plot. It is much easier to visualize a trend in opacity with time with such a graphical presentation than with tabulated numerical readings as shown in Figure 6.4.

6.2 Calculation of Path Length Through the Plume

The observer should be located so that only one plume diameter is being sighted through. In rare cases, the observer has no choice but to be relatively close to the stack so that the view is up through the plume rather than across it. In these cases, this extra width of plume should be

SOURCE NAME: ADMIRAL POWER PLANT
ADDRESS: 112 OCEAN ROAD
CITY: ADMIRAL CITY. STATE: VA ZIP: 23451
PHONE: 804-425-5101 SOURCE ID NUMBER: NEDS 45721
PROCESS EQUIPMENT: OIL FIRED BOILER OPERATING MODE: BASE LOAD
CONTROL EQUIPMENT: ELECTROSTATIC PRECIPITATOR OPERATING MODE: RAPPING
DESCRIBE EMISSION POINT: START BRICK STACK 25' DIA. STOP ✓
HEIGHT ABOVE GROUND LEVEL: START 100' STOP ✓ HEIGHT RELATIVE TO OBSERVER: START 100' STOP ✓
DISTANCE FROM OBSERVER: START 400' STOP ✓ DIRECTION FROM OBSERVER: START NNE STOP ✓
DESCRIBE EMISSIONS: START LOFTING PLUME STOP ✓
EMISSION COLOR: START GREY/WHITE STOP ✓ PLUME TYPE: CONTINUOUS ☑ FUGITIVE ☐ INTERMITTENT ☐
WATER DROPLETS PRESENT: NO ☑ YES ☐ IF WATER DROPLET PLUME: ATTACHED ☐ DETACHED ☐
POINT IN THE PLUME AT WHICH OPACITY WAS DETERMINED: START 10' ABOVE STACK EXIT STOP ✓
DESCRIBE BACKGROUND: START SKY STOP W/BROKEN CLOUDS
BACKGROUND COLOR: START BLUE STOP BLUE/WHITE SKY CONDITIONS: START CLEAR STOP PARTLY CLOUDY
WIND SPEED: START 15mph STOP 20mph WIND DIRECTION: START SW STOP ✓
AMBIENT TEMP.: START 85°F STOP ✓ WET BULB TEMP.: 54°F RH, percent: 8.5%

Source Layout Sketch — Draw North Arrow

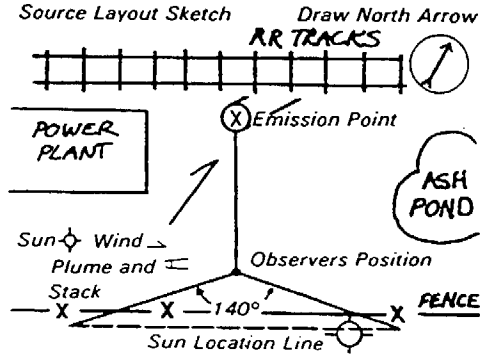

COMMENTS: USES #6 OIL

I HAVE RECEIVED A COPY OF THESE OPACITY OBSERVATIONS
SIGNATURE: William P. Jance
TITLE: SHIFT MANAGER DATE: 7-15-82

OBSERVATION DATE: 15 JULY 1982 START TIME: 1330 STOP TIME: 1342

SEC / MIN	0	15	30	45	SEC / MIN	0	15	30	45
1	30	35	55	55	31				
2	55	50	40	30	32				
3	35	35	35	35	33				
4	30	35	35	35	34				
5	30	30	30	30	35				
6	35	35	35	35	36				
7	30	30	35	35	37				
8	35	40	60	55	38				
9	60	40	55	60	39				
10	50	45	35	30	40				
11	30	30	30	30	41				
12	30	30	30	30	42				
13					43				
14					44				
15					45				
16					46				
17					47				
18					48				
19					49				
20					50				
21					51				
22					52				
23					53				
24					54				
25					55				
26					56				
27					57				
28					58				
29					59				
30					60				

AVERAGE OPACITY FOR HIGHEST PERIOD: 40% NUMBER OF READINGS ABOVE 40 % WERE: 11
RANGE OF OPACITY READINGS MINIMUM: 30% MAXIMUM: 60%
OBSERVER'S NAME (PRINT): V.E. PROFFIT
OBSERVER'S SIGNATURE: V. E. Proffit DATE: 15 JULY 82
ORGANIZATION: STATE AIR POLLUTION CONTROL BOARD
CERTIFIED BY: EASTERN TECHNICAL ASSOC. DATE: 18 MAY 1982
VERIFIED BY: RDA DATE: 15 AUG 1982

Figure 6.1. Visible emission observation form.

Visible Emission Summary Data Sheet

Company ADMIRAL POWER PLANT Date 15 JULY 1982 Location 112 OCEAN RD., ADMIRAL CITY

Start time 1330 Emission point OIL FIRED BOILER

Start no.	Total opacity	Average opacity	Start no.	Total opacity	Average opacity	Start no.	Total opacity	Average opacity	Start no.	Total opacity	Average opacity	Start no.	Total opacity	Average opacity	Start no.	Total opacity	Average opacity
1	885	36.8	37			73			109			145			181		
2	885	36.8	38			74			110			146			182		
3	880	36.6	39			75			111			147			183		
4	860	35.8	40			76			112			148			184		
5	840	35.0	41			77			113			149			185		
6	845	35.2	42			78			114			150			186		
7			43			79			115			151			187		
8			44			80			116			152			188		
9			45			81			117			153			189		
10			46			82			118			154			190		
11			47			83			119			155			191		
12			48			84			120			156			192		
13			49			85			121			157			193		
14			50			86			122			158			194		
15			51			87			123			159			195		
16			52			88			124			160			196		
17			53			89			125			161			197		
18			54			90			126			162			198		
19			55			91			127			163			199		
20			56			92			128			164			200		
21			57			93			129			165			201		
22			58			94			130			166			202		
23			59			95			131			167			203		
24			60			96			132			168			204		
25			61			97			133			169			205		
26			62			98			134			170			206		
27			63			99			135			171			207		
28			64			100			136			172			208		
29			65			101			137			173			209		
30			66			102			138			174			210		
31			67			103			139			175			211		
32			68			104			140			176			212		
33			69			105			141			177			213		
34			70			106			142			178			214		
35			71			107			143			179			215		
36			72			108			144			180			216		

Maximum average 36.8 % Start number of six minute average 1 /

Number of nonoverlapping averages in excess of standard 3 Listing start number of these averages 1, 12, 80, 175

Calculated by V.E. PROFFET Date 16 JULY 83 Reviewed by _____ Date 17 JULY 1982

Figure 6.2. Visible emission summary data sheet.

VISIBLE EMISSION OBSERVATION FORM

SOURCE NAME		
ADDRESS		
CITY	STATE	ZIP
PHONE	SOURCE ID NUMBER	
PROCESS EQUIPMENT	OPERATING MODE	
CONTROL EQUIPMENT	OPERATING MODE	
DESCRIBE EMISSION POINT START STOP		
HEIGHT ABOVE GROUND LEVEL START STOP	HEIGHT RELATIVE TO OBSERVER START STOP	
DISTANCE FROM OBSERVER START STOP	DIRECTION FROM OBSERVER START STOP	
DESCRIBE EMISSIONS START STOP		
EMISSION COLOR START STOP	PLUME TYPE: CONTINUOUS ☐ FUGITIVE ☐ INTERMITTENT ☐	
WATER DROPLETS PRESENT: NO ☐ YES ☐	IF WATER DROPLET PLUME: ATTACHED ☐ DETACHED ☐	
POINT IN THE PLUME AT WHICH OPACITY WAS DETERMINED START STOP		
DESCRIBE BACKGROUND START STOP		
BACKGROUND COLOR START STOP	SKY CONDITIONS START STOP	
WIND SPEED START STOP	WIND DIRECTION START STOP	
AMBIENT TEMP. START STOP	WET BULB TEMP.	RH,percent

Source Layout Sketch — Draw North Arrow

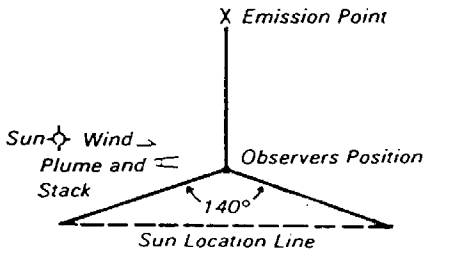

OBSERVATION DATE	START TIME				STOP TIME				
SEC / MIN	0	15	30	45	SEC / MIN	0	15	30	45
1	1	2	3	4	31	121	122	123	124
2	5	6	7	8	32	125	126	127	128
3	9	10	11	12	33	129	130	131	132
4	13	14	15	16	34	133	134	135	136
5	17	18	19	20	35	137	138	139	140
6	21	22	23	24	36	141	142	143	144
7	25	26	27	28	37	145	146	147	148
8	29	30	31	32	38	149	150	151	152
9	33	34	35	36	39	153	154	155	156
10	37	38	39	40	40	157	158	159	160
11	41	42	43	44	41	161	162	163	164
12	45	46	47	48	42	165	166	167	168
13	49	50	51	52	43	169	170	171	172
14	53	54	55	56	44	173	174	175	176
15	57	58	59	60	45	177	178	179	180
16	61	62	63	64	46	181	182	183	184
17	65	66	67	68	47	185	186	187	188
18	69	70	71	72	48	189	190	191	192
19	73	74	75	76	49	193	194	195	196
20	77	78	79	80	50	197	198	199	200
21	81	82	83	84	51	201	202	203	204
22	85	86	87	88	52	205	206	207	208
23	89	90	91	92	53	209	210	211	212
24	93	94	95	96	54	213	214	215	216
25	97	98	99	100	55	217	218	219	220
26	101	102	103	104	56	221	222	223	224
27	105	106	107	108	57	225	226	227	228
28	109	110	111	112	58	229	230	231	232
29	113	114	115	116	59	233	234	235	236
30	117	118	119	120	60	237	238	239	240

AVERAGE OPACITY FOR HIGHEST PERIOD	NUMBER OF READINGS ABOVE % WERE
RANGE OF OPACITY READINGS MINIMUM	MAXIMUM
OBSERVER'S NAME (PRINT)	
OBSERVER'S SIGNATURE	DATE
ORGANIZATION	
CERTIFIED BY	DATE
VERIFIED BY	DATE

COMMENTS	
I HAVE RECEIVED A COPY OF THESE OPACITY OBSERVATIONS SIGNATURE	
TITLE	DATE

Figure 6.3. Opacity data form with start numbers shown.

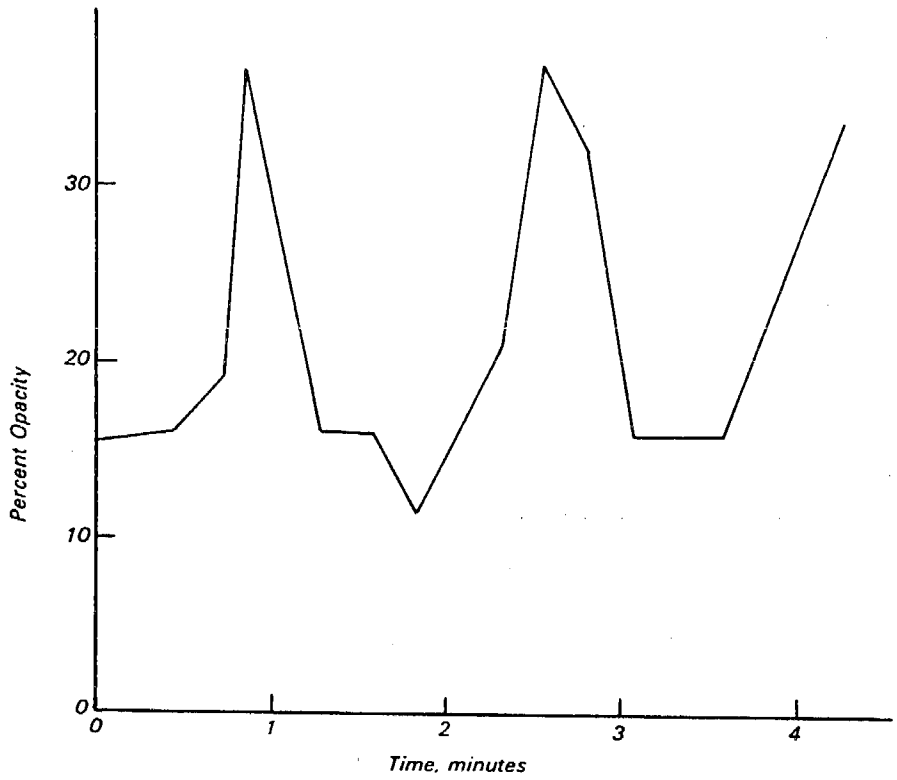

Figure 6.4. Plot opacity versus time.

acknowledged and the individual data values may be adjusted mathematically in the final data report to show the increase in opacity reading due to the added path length. These adjusted opacity readings should be used in determining averages in excess of the standard.

The calculation of observed path length is shown in Appendix A of Reference 1 and is included here for the observer's convenience. Figure 6.5 shows how the slant angle varies with distance from an elevated source. As an observer moves closer to the base of the stack, the angle of sight and the path length through the plume both increase; this causes the observed opacity to increase even though the cross-plume opacity remains constant. This situation only applies when the opacity is read through a vertically rising plume and the observer is on the same plane as the base of the stack.

The actual opacity may be calculated from the observed opacity, if the slant angle θ is known, or from the known height of the stack and the distance from the observer to the base of the stack.

Method 1 (when slant angle θ is known)

$$1 - \left(\frac{O_o}{100}\right) = T_o \qquad \text{Equation 6-1}$$

$$(1 - T_o^F) \times 100 = O_c$$

where

O_o = observed opacity in %
T_o = observed transmittance
F = cosine of θ
O_c = corrected opacity in %.

Method 2 (where distances are known)

$$F = \frac{Y}{\sqrt{H^2 + Y^2}} \qquad \text{Equation 6-2}$$

$$1 - \left(\frac{O_o}{100}\right) = T_o$$

$$(1 - T_o^F) \times 100 = O_c$$

where

O_o = observed opacity in %
T_o = observed transmittance
F = cosine of θ
O_c = corrected opacity in %
H = height of stack
Y = distance of observer from stack.

Note: Since the correction is a power function, the correction must be made on each opacity reading and the corrected values used for calculations, in lieu of the correction being conducted on the reduced (averaged) data.

Table 6.1 presents the opacity corrected for slant angle or viewing angle θ versus the full range of opacity readings. For angles less than approximately 18° the adjustment is relatively insignificant.

6.3 Predicting Steam Plume Formation

The psychrometric chart can be used in conjunction with a simple

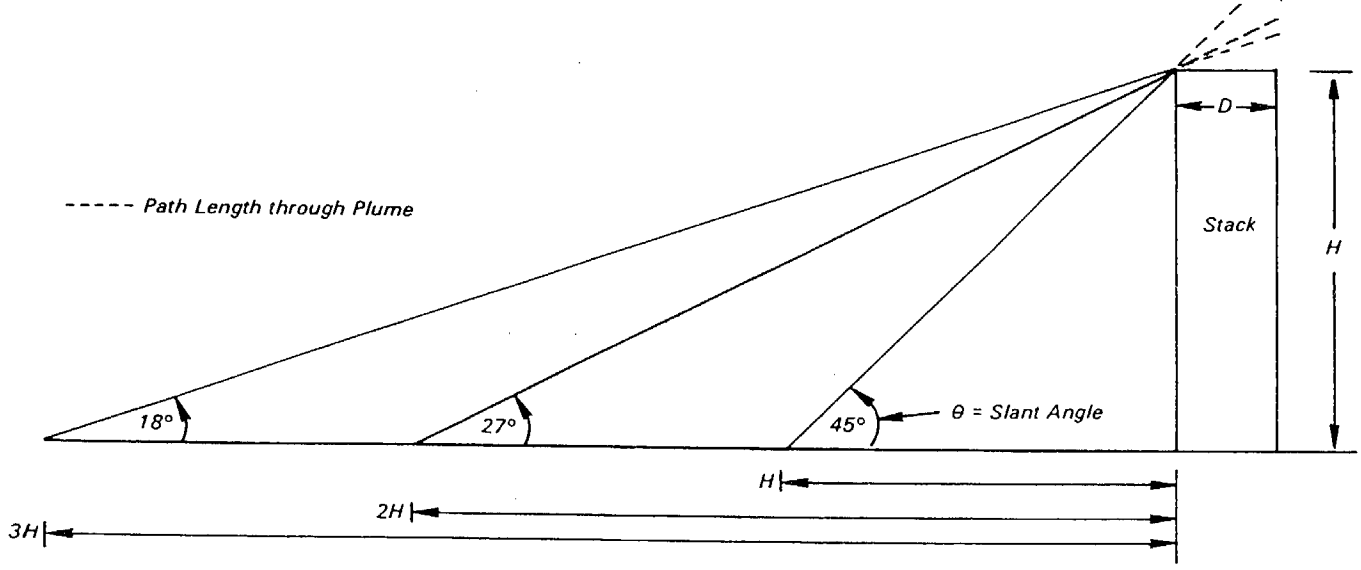

Figure 6.5. Variation of observation angle and pathlength with distance from an elevated source.

Table 6.1. Opacity Correction for Slant Angle

Measured opacity, %	Slant angle θ, degrees 0	10	20	30	40	50	60
95	95	95	94	93	90	85	78
90	90	90	89	86	83	77	68
85	85	85	83	81	77	71	62
80	80	80	78	75	71	65	55
75	75	75	73	70	65	59	50
70	70	70	68	65	60	54	45
65	65	64	63	60	55	49	41
60	60	59	58	55	50	45	37
55	55	55	53	50	46	40	33
50	50	50	48	45	41	36	29
45	45	45	43	40	37	32	26
40	40	40	38	36	32	28	23
35	35	35	33	31	28	24	19
30	30	30	29	27	24	21	16
25	25	25	24	22	20	17	13
20	20	20	19	18	16	13	11
15	15	15	14	13	12	10	8
10	10	10	9	9	8	7	5
5	5	5	4	4	3	3	3
0	0	0	0	0	0	0	0

equation to predict the formation of a visible water vapor (steam) plume. The psychrometric chart is a graphical representation of the solutions of various equations of the state of air and water vapor mixtures (see Figure 6.6). Both the ambient and stack emission data points on the chart are referred to as their "state point" and represent one unique combination of the following five atmospheric properties.

Dry bulb temperature - The actual ambient temperature; represented by the horizontal axis.

Wet bulb temperature - The temperature indicated by a "wet bulb" thermometer (a regular thermometer that has its bulb covered with a wet wick and exposed to a moving air stream); represented by the curved axis on the left side of the chart (saturation temperature).

Relative humidity - The ratio of the partial pressure of the water vapor to the vapor pressure of water at the same temperature; values are represented by the set of curved lines originating in the lower left portion of the chart.

Absolute humidity (humidity ratio) - The mass of water vapor per unit mass of air; expressed as grains per pound or pound per pound; represented by the vertical axes.

Specific volume - The volume occupied by a unit mass of air, expressed as cubic feet per pound; represented by the diagonal lines running from lower right to upper left. The relationships shown in the chart differ with changes in barometric pressure. The chart included in this section is for a barometric pressure of 29.92 inches of mercury. Therefore, with use of wet bulb dry bulb technique, if the actual pressure is less than about 29.5 inches of mercury, the humidity ratio should be calculated from the equation and not the chart.

Plotting the values for any two of the five atmospheric properties determines the values for the remaining three properties. For example, by using a sling psychrometer to measure the wet and dry bulb temperatures, one can determine the relative humidity, the absolute humidity, and the specific volume of the air.

To predict the occurrence of a visible steam plume, both the ambient air conditions and the stack gas conditions must be known or calculated and located on the psychrometric chart. If any portion of the line connecting the two points lies to the left of the 100 percent relative humidity line, it is an indication that the change of the exhaust gas from the stack state conditions to the ambient air state will be accompanied by the condensation of the water vapor present in the exhaust stream and a resultant visible steam plume.

Obtaining the state point for the ambient air conditions is relatively simple; as previously indicated, the wet and dry bulb temperatures, which will determine a unique state point, can be measured by using a sling psychrometer. Often the only data available for determining the state point of the stack gas are the dry bulb temperature of the exhaust gas stream and its moisture content.* However, a relationship exists between the moisture content and the humidity ratio (or absolute humidity), as shown in the following equation:

$$HR = \frac{0.62\,(MC)}{1 - MC} \qquad \text{Equation 6-3}$$

where

HR = humidity ratio, in pound of water vapor per pound of dry air

MC = $\frac{\%}{100}$ moisture content, expressed as a decimal.

The following sample problem demonstrates the use of this equation.

Given:

Ambient conditions
- Dry bulb temperature = 70°F
- Wet bulb temperature = 60°F
- Barometric pressure = 29.92 in. Hg

Effluent gas conditions
- Dry bulb temperature = 160°F
- Moisture content = $\frac{16.8\%}{100}$ = 0.168

Find:

Ambient relative humidity
Exhaust gas humidity ratio
Determine whether or not condensed water (steam plume) will form

Table 6.2. Vapor Pressures of Water at Saturation

Temp., °F	Water vapor pressure, in. Hg 0	1	2	3	4	5	6	7	8	9
30	0.1647	0.1716	0.1803	0.1878	0.1955	0.2035	0.2118	0.2203	0.2292	0.2383
40	0.2478	0.2576	0.2677	0.2783	0.2891	0.3004	0.3120	0.3240	0.3364	0.3493
50	0.3626	0.3764	0.3906	0.4052	0.4203	0.4359	0.4520	0.4586	0.4858	0.5035
60	0.5218	0.5407	0.5601	0.5802	0.6009	0.6222	0.6442	0.6669	0.6903	0.7144
70	0.7392	0.7648	0.7912	0.8183	0.8462	0.8750	0.9046	0.9352	0.9666	0.9989
80	1.032	1.066	1.102	1.138	1.175	1.213	1.253	1.293	1.335	1.378
90	1.422	1.467	1.513	1.561	1.610	1.660	1.712	1.765	1.819	1.875
100	1.932	1.992	2.052	2.114	2.178	2.243	2.310	2.379	2.449	2.521
110	2.596	2.672	2.749	2.829	2.911	2.995	3.081	3.169	3.259	3.351
120	3.446	3.543	3.642	3.744	3.848	3.954	4.063	4.174	4.289	4.406
130	4.525	4.647	4.772	4.900	5.031	5.165	5.302	5.442	5.585	5.732

*These are usually obtained from plant records or are estimated from recent source test data

Solution:

Plot ambient wet bulb and dry bulb temperatures (see Figure 6.5).

Ambient relative humidity = 55%.

Exhaust gas humidity ratio = HR

$$HR = \frac{0.62\ (MC)}{1 - MC}$$

$$= \frac{0.62\ (0.168)}{1 - 0.168}$$

$$= 0.125 \text{ lb/lb dry air}$$

Plot humidity ratio and stack dry bulb temperature (see Figure 6.6). Connect the ambient state point and stack gas state point with a straight line (see Figure 6.5). The line crosses the 100 percent relative humidity line; thus, formation of a visible water vapor plume is probable.

When the wet bulb/dry bulb technique is used and the barometric pressure is less than 29.5 in. Hg, it is suggested that Equation 6-5 be used to calculate the moisture content (MC).

$$MC = \frac{V.P.}{P_{abs}} \qquad \text{Equation 6-5}$$

where

VP = Vapor pressure of H_2O using Equation 6-6

P_{abs} = Barometric pressure

$$VP = SVP - (3.57 \times 10^{-4})\ (P_{abs})\ (T_d - T_w)\ (1 + \frac{T_w - 32}{1571}) \qquad \text{Equation 6-6}$$

where

SVP = Saturated vapor pressure in in. Hg at wet bulb temperature (taken from Table 6.2)

T_d = Temperature of dry bulb thermometer, °F

T_w = Temperature of wet bulb thermometer, °F.

Table 6.3 *Activity Matrix for Calculations*

Calculation	*Acceptance limits*	*Frequency and method of measurement*	*Action if requirements are not met*
Average opacity	*Data in Fig 6.1 completed and checked to within roundoff error*	*For each compliance test, perform independent check of data form and calculations*	*Complete the data and initial any changes in calculations*
Running average opacity	*Data in Fig 6.2 completed and checked*	*As above*	*As above*
Path length through the plume	*No limits have been set*	*For each compliance test with the slant angle >18°, calculate using Eq. 6-1*	*Perform calculations*
Predicting steam plume	*No limits have been set*	*Use psychrometric chart and Equation 6-3*	*Perform calculations*

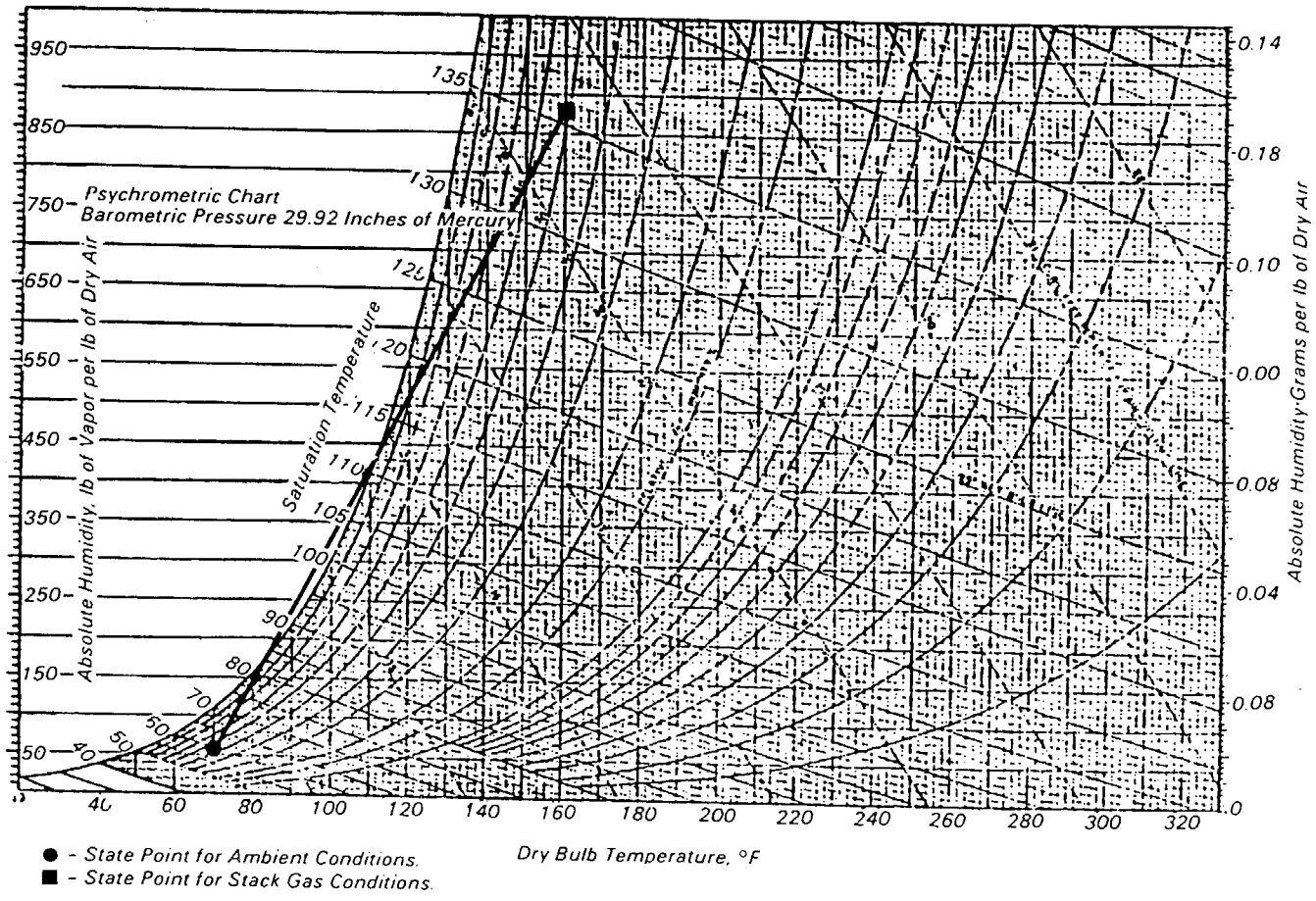

Figure 6.6. *Psychrometric chart for problem solution.*

7.0 Auditing Procedures

An audit is an independent assessment of data quality. Independence is achieved by using observers and data analysts other than the original observer/analyst. Routine QA checks for proper observer positioning and documentation are necessary to obtain good quality data. Table 7.1 at the end of this section summarizes the QA activities for auditing.

Two performance audits are recommended for VE readings:

1. Audit of observer by having an experienced observer make independent readings.
2. Audit of data forms and calculations.

In addition, it is recommended that a systems audit be conducted by an experienced observer at the same time the performance audit of visible emissions is conducted. The two performance audits are described in Subsection 7.1 and the systems audit is described in Subsection 7.2.

7.1 Performance Audits

Performance audits are quantitative evaluations of the quality of visible emission data.

7.1.1 Performance Audit of Visible Emissions - In this audit, an experienced observer goes with the observer being audited and both observers take the readings simulataneously (using the same time piece) and complete the data forms as independently as is practical. The audit is intended for observers in their first year and observers who have not made opacity observation in the field in over a year. The differences between the two readings serve as a measure of accuracy assuming the experienced observer reads the "true opacity." Because this assumption is not necessarily correct, the difference between the two readings is a combined measure of accuracy of both observers. For a minimum of six minutes (24 readings), the average of the absolute differences should be less than 10 percent, and no individual differences should exceed 20 percent. (The values of 10% and 20% suggested for the limits are the approximate results of combining the allowable errors of the two observers; e.g., $\sqrt{(7.5)^2 + (7.5)^2} = 10.6\%$, and $\sqrt{15^2 + 15^2} = 21.2\%$. This audit should be performed twice in a year for the first year of an observer and whenever conditions tend to warrant them thereafter. Calculate %A using Equation 7-1.

$$\%A = |VE\,(observer) - VE\,(auditor)| \qquad \text{Equation 7-1}$$

where

VE (observer) = average and individual VE reading(s) of the observer being audited

VE (auditor) = average and individual VE reading(s) of the auditor.

7.1.2 Performance Audit of Data Calculations - This audit is an independent check of all calculations performed for the summary VE report. Every calculation should be checked within round-off error. This audit should be conducted on at least 7 percent of the annual numbers of VE summary reports.

7.2 System Audit

A system audit provides an on-site qualitative inspection and review of the total inspection. This audit includes a check of the "Record of Visual Determination of Opacity," Figure 9.1 of Section 3.12.8, and the top portion of the "Observation Record," Figure 9.2 of Section 3.12.8. In addition, the auditor should assess the visible emission inspection technique used by the auditee. This portion of the system audit is best handled in conjunction with the performance audit described in the previous Subsection 7.1.1. Therefore, the frequency of the system audit should coincide with the frequency of the performance audits of visible emissions. Some observations to be made by the auditor are listed in Figure 7.1.

Table 7.1. Activity Matrix for Auditing Procedures

Audit	*Acceptance limits*	*Frequency and method of measurement*	*Action if requirements are not met*
Performance audit of visible emissions	*Individual observations within ±20%; average (absolute) deviation within ±10%*	*At least two times during the first year; simultaneous observation and data recording*	*Review observation techniques*
Performance audit of data calculations	*Original and check calculations agree within round-off error*	*Seven percent of tests for compliance, perform independent check on all calculations*	*Check and correct all calculated results (averages)*
System audit	*Conduct observations as described in this section of the Handbook*	*At least two times during the first year; use audit checklist (Fig 7.1)*	*Explain to observer the deviations from recommended procedures; note the deviations on Fig 7.1*

Name of individual(s) audited Buff A. Low

Affiliation New York State Agency

Auditor name N. Jersey Affiliation Region II EPA

Date of audit 12-25-82 Auditor signature New Jersey

Yes	No	Comment	Operation
✓			1. Equipment satisfactory
✓			2. Data forms completed
✓			3. Post-notification (courtesy obligation) performed
✓			4. Correct identification of point of emissions
✓			5. Plume associated with process generation point
✓			6. Credentials okay
✓			7. Observer acted in professional and courteous manner
✓			8. Proper observer position
✓			9. Opacity readings complete
✓			10. Ancillary measurements available
✓		confidentially required	11. Camera used to validate sightings/source identification
✓			12. Facility personnel given a copy of raw data
		N/A	13. Mutiple sources/plumes/outlets
✓			14. Lighting conditions satisfactory
			15. Background conditions (raining, etc.) satisfactory
✓			16. Slant angle recorded
		N/A	17. Fugitive emissions
✓			18. Time of day recorded
✓			19. Recertified within last 6 months

General comments:

Performance Audit of VE Readings Were Acceptable. However, All of the VE Readings were less than 20% in Opacity from the source.

Figure 7.1. Method 9 checklist for auditors.

Method 9—Visual Determination of the Opacity of Emissions from Stationary Sources

Many stationary sources discharge visible emissions into the atmosphere; these emissions are usually in the shape of a plume. This method involves the determination of plume opacity by qualified observers. The method includes procedures for the training and certification of observers, and procedures to be used in the field for determination of plume opacity. The appearance of a plume as viewed by an observer depends upon a number of variables, some of which may be controllable and some of which may not be controllable in the field. Variables which can be controlled to an extent to which they no longer exert a significant influence upon plume appearance include: Angle of the observer with respect to the plume; angle of the observer with respect to the sun; point of observation of attached and detached steam plume; and angle of the observer with respect to a plume emitted from a rectangular stack with a large length to width ratio. The method includes specific criteria applicable to these variables.

Other variables which may not be controllable in the field are luminescence and color contrast between the plume and the background against which the plume is viewed. These variables exert an influence upon the appearance of a plume as viewed by an observer, and can affect the ability of the observer to accurately assign opacity values to the observed plume. Studies of the theory of plume opacity and field studies have demonstrated that a plume is most visible and presents the greatest apparent opacity when viewed against a contrasting background. It follows from this, and is confirmed by field trials, that the opacity of a plume, viewed under conditions where a contrasting background is present can be assigned with the greatest degree of accuracy. However, the potential for a positive error is also the greatest when a plume is viewed under such contrasting conditions. Under conditions presenting a less contrasting background, the apparent opacity of a plume is less and approaches zero as the color and luminescence contrast decrease toward zero. As a result, significant negative bias and negative errors can be made when a plume is viewed under less contrasting conditions. A negative bias decreases rather than increases the possibility that a plant operator will be cited for a violation of opacity standards due to observer error.

Studies have been undertaken to determine the magnitude of positive errors which can be made by qualified observers while reading plumes under contrasting conditions and using the procedures set forth in this method. The results of these studies (field trials) which involve a total of 769 sets of 25 readings each are as follows:

(1) For black plumes (133 sets at a smoke generator). 100 percent of the sets were read with a positive error[1] of less than 7.5 percent opacity; 99 percent were read with a positive error of less than 5 percent opacity.

(2) For white plumes (170 sets at a smoke generator, 168 sets at a coal-fired power plant, 298 sets at a sulfuric acid plant), 99 percent of the sets were read with a positive error of less than 7.5 percent opacity; 95 percent were read with a positive error of less than 5 percent opacity.

The positive observational error associated with an average of twenty-five readings is therefore established. The accuracy of the method must be taken into account when determining possible violations of applicable opacity standards.

8.0 Reference Method[a]

1. Principle and applicability.

1.1 Principle. The opacity of emissions from stationary sources is determined visually by a qualified observer.

1.2 Applicability. This method is applicable for the determination of the opacity of emissions from stationary sources pursuant to § 60.11(b) and for qualifying observers for visually determining opacity of emissions.

[1]For a set, positive error = average opacity determined by observers' 25 observations — average opacity determined from transmissometer's 25 recordings.

2. Procedures.

The observer qualified in accordance with paragraph 3 of this method shall use the following procedures for visually determining the opacity of emissions:

2.1 Position. The qualified observer shall stand at a distance sufficient to provide a clear view of the emissions with the sun oriented in the 140° sector to his back. Consistent with maintaining the above requirement, the observer shall, as much as possible, make his observations from a position such that his line of vision is approximately perpendicular to the plume direction, and when observing opacity of emissions from rectangular outlets (e.g. roof monitors, open baghouses, noncircular stacks), approximately perpendicular to the longer axis of the outlet. The observer's line of sight should not include more than one plume at a time when multiple stacks are involved, and in any case the observer should make his observations with his line of sight perpendicular to the longer axis of such a set of multiple stacks (e.g. stub-stacks on baghouses).

2.2 Field records. The observer shall record the name of the plant, emission location, type facility, observer's name and affiliation, and the date on a field data sheet (Figure 9-1). The time, estimated distance to the emission location, approximate wind direction, estimated wind speed, description of the sky condition (presence and color of clouds), and plume background are recorded on a field data sheet at the time opacity readings are initiated and completed.

2.3 Observations. Opacity observations shall be made at the point of greatest opacity in that portion of the plume where condensed water vapor is not present. The observer shall not look continuously at the plume, but instead shall observe the plume momentarily at 15-second intervals.

2.3.1. Attached steam plumes. When condensed water vapor is present within the plume as it emerges from the emission outlet, opacity observations shall be made beyond the point in the plume at which

Company _____
Location _____
Test Number _____
Date _____
Type Facility _____
Control Device _____

Hours of Observation _____
Observer _____
Observer Certification Date _____
Observer Affiliation _____
Point of Emissions _____
Height of Discharge Point _____

	Initial			Final
Clock Time				
Observer Location *Distance to Discharge*				
Direction from Discharge				
Height of Observation Point				
Background Description				
Weather Conditions *Wind Direction*				
Wind Speed				
Ambient Temperature				
Sky Conditions (clear, overcast, % clouds, etc.)				
Plume Description *Color*				
Distance Visible				
Other Information				

Summary of Average Opacity

Set Number	*Time*	*Opacity*	
	Start—End	*Sum*	*Average*

Readings ranged from ____ *to* ____ *% opacity*

The source was/was not in compliance with ____ *at the time evaluation was made.*

Figure 9.1 *Record of Visual Determination of Opacity*

Page ____ *of* ____

condensed water vapor is no longer visible. The observer shall record the approximate distance from the emission outlet to the point in the plume at which the observations are made.

2.3.2 Detached steam plume. When water vapor in the plume condenses and becomes visible at a distinct distance from the emission outlet, the opacity of emissions should be evaluated at the emission outlet prior to the condensation of water vapor and the formation of the steam plume.

2.4 Recording observations. Opacity observations shall be recorded to the nearest 5 percent at 15-second intervals on an observational record sheet. (See Figure 9-2 for an example.) A minimum of 24 observations shall be recorded. Each momentary observation recorded shall be deemed to represent the average opacity of emissions for a 15-second period.

2.5 Data Reduction. Opacity shall be determined as an average of 24 consecutive observations recorded at 15-second intervals. Divide the observations recorded on the record sheet into sets of 24 consecutive observations. A set is composed of any 24 consecutive observations. Sets need not be consecutive in time and in no case shall two sets overlap. For each set of 24 observations, calculate the average by summing the opacity of the 24 observations and dividing this sum by 24. If an applicable

Company _____ Observer _____
Location _____ Type Facility _____
Test Number _____ Point of Emissions _____
Date _____

Hr.	Min.	Seconds				Steam Plume (check if applicable)		Comments
		0	15	30	45	Attached	Detached	
	0							
	1							
	2							
	3							
	4							
	5							
	6							
	7							
	8							
	9							
	10							
	11							
	12							
	13							
	14							
	15							
	16							
	17							
	18							
	19							
	20							
	21							
	22							
	23							
	24							
	25							
	26							
	27							
	28							
	29							
	30							
	31							
	32							
	33							
	34							
	35							
	36							
	37							
	38							
	39							
	40							
	41							
	42							
	43							
	44							
	45							
	46							
	47							
	48							
	49							
	50							
	51							
	52							
	53							
	54							
	55							
	56							
	57							
	58							
	59							

Figure 9.2 Observation Record

(FR Doc. 74-26150 Filed 11-11-74; 8:45 am)

standard specifies an averaging time requiring more than 24 observations, calculate the average for all observations made during the specified time period. Record the average opacity on a record sheet. (See Figure 9-1 for an example.)

3. Qualifications and testing.

3.1 Certification requirements. To receive certification as a qualified observer, a candidate must be tested and demonstrate the ability to assign opacity readings in 5 percent increments to 25 different black plumes and 25 different white plumes, with an error not to exceed 15 percent opacity on any one reading and an average error not to exceed 7.5 percent opacity in each category. Candidates shall be tested according to the procedures described in paragraph 3.2. Smoke generators used pursuant to paragraph 3.2 shall be equipped with a smoke meter which meets the requirements of paragraph 3.3.

The certification shall be valid for a period of 6 months, at which time the qualification procedure must be repeated by any observer in order to retain certification.

3.2 Certification procedure.

The certification test consists of showing the candidate a complete run of 50 plumes—25 black plumes and 25 white plumes—generated by a smoke generator. Plumes within each set of 25 black and 25 white runs shall be presented in random order. The candidate assigns an opacity value to each plume and records his observation on a suitable form. At the completion of each run of 50 readings, the score of the candidate is determined. If a candidate fails to qualify, the complete run of 50 readings must be repeated in any retest. The smoke test may be administered as part of a smoke school or training program, and may be preceded by training or familiarization runs of the smoke generator during which candidates are shown black and white plumes of known opacity.

3.3 Smoke generator specifications.

Any smoke generator used for the purposes of paragraph 3.2 shall be equipped with a smoke meter installed to measure opacity across the diameter of the smoke generator stack. The smoke meter output shall display instack opacity based upon a path length equal to the stack exit diameter, on a full 0 to 100 percent chart recorder scale. The smoke meter optical design and performance shall meet the specifications shown in Table 9-1. The smoke meter shall be calibrated as prescribed in paragraph 3.3.1 prior to the conduct of each smoke reading test. At the completion of each test, the zero and span drift shall be checked and if the drift exceeds ±1 percent opacity, the conditions shall be corrected prior to conducting any subsequent test runs. The smoke meter shall be demonstrated, at the time of installation, to meet the specifications listed in Table 9-1. This demonstration shall be repeated following any subsequent repair or replacement of the photocell or associated electronic circuitry including the chart recorder or output meter, or every 6 months, whichever occurs first.

Table 9-1. Smoke Meter Design and Performance Specifications

Parameter:	Specification
a. Light source	Incandescent lamp operated at nominal rated voltage.
b. Spectral response of photocell.	Photopic (daylight spectral response of the human eye—reference 4.3).
c. Angle of view	15° maximum total angle.
d. Angle of projection	15° maximum total angle.
e. Calibration error	±3% opacity, maximum
f. Zero and span drift.	±1% opacity, 30 minutes.
g. Response time	≤5 seconds.

3.3.1 Calibration. The smoke meter is calibrated after allowing a minimum of 30 minutes warmup by alternately producing simulated opacity of 0 percent and 100 percent. When stable response at 0 percent or 100 percent is noted, the smoke meter is adjusted to produce an output of 0 percent or 100 percent, as appropriate. This calibration shall be repeated until stable 0 percent and 100 percent readings are produced without adjustment. Simulated 0 percent and 100 percent opacity values may be produced by alternately switching the power to the light source on and off while the smoke generator is not producing smoke.

3.3.2 Smoke meter evaluation. The smoke meter design and performance are to be evaluated as follows:

3.3.2.1 Light source. Verify from manufacturer's data and from voltage measurements made at the lamp, as installed, that the lamp is operated within ±5 percent of the nominal rated voltage.

3.3.2.2 Spectral response of photocell. Verify from manufacturer's data that the photocell has a photopic response; i.e., the spectral sensitivity of the cell shall closely approximate the standard spectral-luminosity curve for photopic vision which is referenced in (b) of Table 9-1.

3.3.2.3 Angle of view. Check construction geometry to ensure that the total angle of view of the smoke plume, as seen by the photocell, does not exceed 15°. The total angle of view may be calculated from: $\theta = 2 \tan^{-1} d/2L$, where θ = total angle of view; d = the sum of the photocell diameter + the diameter of the limiting aperture; and L = the distance from the photocell to the limiting aperture. The limiting aperture is the point in the path between the photocell and the smoke plume where the angle of view is most restricted. In smoke generator smoke meters this is normally an orifice plate.

3.3.2.4 Angle of projection. Check construction geometry to ensure that the total angle of projection of the lamp on the smoke plume does not exceed 15°. The total angle of projection may be calculated from: $\theta = 2 \tan^{-1} d/2L$, where θ = total angle of projection; d = the sum of the length of the lamp filament + the diameter of the limiting aperture; and L = the distance from the lamp to the limiting aperture.

3.3.2.5 Calibration error. Using neutral-density filters of known opacity, check the error between the actual response and the theoretical linear response of the smoke meter. This check is accomplished by first calibrating the smoke meter according to 3.3.1 and then inserting a series of three neutral-density filters of nominal opacity of 20, 50, and 75 percent in the smoke meter pathlength. Filters calibrated within ±2 percent shall be used. Care should be taken when inserting the filters to prevent stray light from affecting the meter. Make a total of five nonconsecutive readings for each filter. The maximum error on any one reading shall be 3 percent opacity.

3.3.2.6 Zero and span drift. Determine the zero and span drift by calibrating and operating the smoke

generator in a normal manner over a 1-hour period. The drift is measured by checking the zero and span at the end of this period.

3.3.2.7 Response time. Determine the response time by producing the series of five simulated 0 percent and 100 percent opacity values and observing the time required to reach stable response. Opacity values of 0 percent and 100 percent may be simulated by alternately switching the power to the light source off and on while the smoke generator is not operating.

4. References.

4.1 Air Pollution Control District Rules and Regulations, Los Angeles County Air Pollution Control District, Regulation IV, Prohibitions, Rule 50.

4.2 Weisburd, Melvin L. Field Operations and Enforcement Manual for Air, U.S. Environmental Protection Agency, Research Triangle Park, N.C., APTD-1100, August 1972, pp. 4.1-4.36.

4.3 Condon, E.U., and Odishaw, H., Handbook of Physics, McGraw-Hill Co., N.Y., N.Y., 1958, Table 3.1, p. 6-52.

9.0 References and Bibliography

1. Technical Assistance Document: Quality Assurance Guideline for Visible Emission Training Programs, EPA-600/S4-83-011.
2. *Federal Register,* Volume 39, No. 219, November 12, 1974. Method 9 - Visual Determination of the Opacity of Emissions from Stationary Sources (Appendix A).
3. Conner, W.D. Measurement of Opacity by Transmissometer and Smoke Readers. EPA Memorandum Report. 1974.
4. Conner, W.D., and J.R. Hodkinson. Optical Properties and Visual Effects of Smoke Plumes. U.S. Environmental Protection Agency. Office of Air Programs, Edison Electric Institute, and Public Health Service. 1967. AP-30.
5. Coons, J.D., et al. Development, Calibration, and use of a Plume Evaluation Training Unit. *JAPCA* 15: 199-203, May 1965.
6. Crider, W.L., and J.A. Tash. Status Report: Study of Vision Obscuration by Nonblack Plumes. *JAPCA* 14:161-165, May 1964.
7. U.S. Environmental Protection Agency. Evaluation of EPA Smoke School Results. Emission Standards and Engineering Division, Office of Air Quality Planning and Standards. October 9, 1974.
8. Evaluation and Collaborative Study of Method for Visual Determination of Opacity of Emissions from Stationary Sources. EPA-650/4-75-009.
9. Malmberg, K.B. EPA Visible Emission Inspection Procedures. U.S. Environmental Protection Agency, Washington, D.C. August 1975.
10. Osborne, M.C., and M.R. Midgett. Survey of Transmissometer Used in Conducting Visible Emissions Training Courses. Environmental Monitoring and Support Laboratory, U.S. Environmental Protection Agency. March 1978.
11. Ringelmann, M. Method of Estimating Smoke Produced by Industrial Installations. Rev. Technique, 268, June 1898.
12. Weir, A., Jr., D.G. Jones, and L.T. Paypay. Measurement of Particle Size and Other Factors Influencing Plume Opacity. Paper presented at the International Conference on Environmental Sensing and Assessment, Las Vegas, Nevada, September 14-19, 1975.
13. U.S. Environmental Protection Agency. APTI Course 439 Visible Emissions Evaluation. Student Manual. EPA-450/3-78-106, 1978.
14. U.S. Environmental Protection Agency. APTI Course 439 Visible Emissions Evaluation. Instructor Manual. EPA-450/3-78-105, 1978.
15. U.S. Environmental Protection Agency. Guidelines for Evaluation of Visible Emissions. EPA-340/1-75-007, 1975.
16. U.S. Environmental Protection Agency. Screening Procedures for Ambient Air Quality Data. EPA-450/2-78-037, July 1978.
17. Validation of Air Monitoring Data. EPA-600/4-80-030, June 1980.

10.0 Data Forms

Blank data forms are provided on the following pages for the convenience of the QA Handbook user. No documentation is given on these forms because it would detract from their usefulness. Also, the titles are placed at the top of the figures, as is customary for a data form. These forms are not required format, but are intended as guides for the development of an organizations' own program. To relate the form to the text, a form number is also indicated in the lower right-hand corner (e.g., Form M9-1.1, which implies that the form is Figure 1.1. in Section 3.12.1 of the Method 9 Handbook). Any future revisions of this form can be documented by adding A, B, C (e.g., 1.1A, 1.1B). The data forms included in this section are listed below.

Form	*Title*
1.2	Sample Certification Test Form
2.1	Procurement Log
4.1	Visible Emission Observer's Plant Entry Checklist
4.1	Visible Emission Observer's Plant Entry Checklist (Reverse Side)
4.2	Visible Emission Observation Form
4.2	Visible Emission Observation Form (Reverse Side)
5.1	Visible Emission Summary Data Sheet
6.2	Visible Emission Summary Data Sheet (same as Figure 5.1)
7.1	Method 9 Checklist for Auditors

Sample Certification Test Form

Affiliation _____ *Name* _____ *Run Number* _____

Course location _____ *Sunglasses* _____

Date _____ *Sky* _____ *Wind* _____

Distance and direction to stack _____

Reading number																						*Error*
1	0	5	10	15	20	25	30	35	40	45	50	55	60	65	70	75	80	85	90	95	100	____
2	0	5	10	15	20	25	30	35	40	45	50	55	60	65	70	75	80	85	90	95	100	____
3	0	5	10	15	20	25	30	35	40	45	50	55	60	65	70	75	80	85	90	95	100	____
4	0	5	10	15	20	25	30	35	40	45	50	55	60	65	70	75	80	85	90	95	100	____
5	0	5	10	15	20	25	30	35	40	45	50	55	60	65	70	75	80	85	90	95	100	____
6	0	5	10	15	20	25	30	35	40	45	50	55	60	65	70	75	80	85	90	95	100	____
7	0	5	10	15	20	25	30	35	40	45	50	55	60	65	70	75	80	85	90	95	100	____
8	0	5	10	15	20	25	30	35	40	45	50	55	60	65	70	75	80	85	90	95	100	____
9	0	5	10	15	20	25	30	35	40	45	50	55	60	65	70	75	80	85	90	95	100	____
10	0	5	10	15	20	25	30	35	40	45	50	55	60	65	70	75	80	85	90	95	100	____
11	0	5	10	15	20	25	30	35	40	45	50	55	60	65	70	75	80	85	90	95	100	____
12	0	5	10	15	20	25	30	35	40	45	50	55	60	65	70	75	80	85	90	95	100	____
13	0	5	10	15	20	25	30	35	40	45	50	55	60	65	70	75	80	85	90	95	100	____
14	0	5	10	15	20	25	30	35	40	45	50	55	60	65	70	75	80	85	90	95	100	____
15	0	5	10	15	20	25	30	35	40	45	50	55	60	65	70	75	80	85	90	95	100	____
16	0	5	10	15	20	25	30	35	40	45	50	55	60	65	70	75	80	85	90	95	100	____
17	0	5	10	15	20	25	30	35	40	45	50	55	60	65	70	75	80	85	90	95	100	____
18	0	5	10	15	20	25	30	35	40	45	50	55	60	65	70	75	80	85	90	95	100	____
19	0	5	10	15	20	25	30	35	40	45	50	55	60	65	70	75	80	85	90	95	100	____
20	0	5	10	15	20	25	30	35	40	45	50	55	60	65	70	75	80	85	90	95	100	____
21	0	5	10	15	20	25	30	35	40	45	50	55	60	65	70	75	80	85	90	95	100	____
22	0	5	10	15	20	25	30	35	40	45	50	55	60	65	70	75	80	85	90	95	100	____
23	0	5	10	15	20	25	30	35	40	45	50	55	60	65	70	75	80	85	90	95	100	____
24	0	5	10	15	20	25	30	35	40	45	50	55	60	65	70	75	80	85	90	95	100	____
25	0	5	10	15	20	25	30	35	40	45	50	55	60	65	70	75	80	85	90	95	100	____

Deviation _____

Reading number																						*Error*
1	0	5	10	15	20	25	30	35	40	45	50	55	60	65	70	75	80	85	90	95	100	____
2	0	5	10	15	20	25	30	35	40	45	50	55	60	65	70	75	80	85	90	95	100	____
3	0	5	10	15	20	25	30	35	40	45	50	55	60	65	70	75	80	85	90	95	100	____
4	0	5	10	15	20	25	30	35	40	45	50	55	60	65	70	75	80	85	90	95	100	____
5	0	5	10	15	20	25	30	35	40	45	50	55	60	65	70	75	80	85	90	95	100	____
6	0	5	10	15	20	25	30	35	40	45	50	55	60	65	70	75	80	85	90	95	100	____
7	0	5	10	15	20	25	30	35	40	45	50	55	60	65	70	75	80	85	90	95	100	____
8	0	5	10	15	20	25	30	35	40	45	50	55	60	65	70	75	80	85	90	95	100	____
9	0	5	10	15	20	25	30	35	40	45	50	55	60	65	70	75	80	85	90	95	100	____
10	0	5	10	15	20	25	30	35	40	45	50	55	60	65	70	75	80	85	90	95	100	____
11	0	5	10	15	20	25	30	35	40	45	50	55	60	65	70	75	80	85	90	95	100	____
12	0	5	10	15	20	25	30	35	40	45	50	55	60	65	70	75	80	85	90	95	100	____
13	0	5	10	15	20	25	30	35	40	45	50	55	60	65	70	75	80	85	90	95	100	____
14	0	5	10	15	20	25	30	35	40	45	50	55	60	65	70	75	80	85	90	95	100	____
15	0	5	10	15	20	25	30	35	40	45	50	55	60	65	70	75	80	85	90	95	100	____
16	0	5	10	15	20	25	30	35	40	45	50	55	60	65	70	75	80	85	90	95	100	____
17	0	5	10	15	20	25	30	35	40	45	50	55	60	65	70	75	80	85	90	95	100	____
18	0	5	10	15	20	25	30	35	40	45	50	55	60	65	70	75	80	85	90	95	100	____
19	0	5	10	15	20	25	30	35	40	45	50	55	60	65	70	75	80	85	90	95	100	____
20	0	5	10	15	20	25	30	35	40	45	50	55	60	65	70	75	80	85	90	95	100	____
21	0	5	10	15	20	25	30	35	40	45	50	55	60	65	70	75	80	85	90	95	100	____
22	0	5	10	15	20	25	30	35	40	45	50	55	60	65	70	75	80	85	90	95	100	____
23	0	5	10	15	20	25	30	35	40	45	50	55	60	65	70	75	80	85	90	95	100	____
24	0	5	10	15	20	25	30	35	40	45	50	55	60	65	70	75	80	85	90	95	100	____
25	0	5	10	15	20	25	30	35	40	45	50	55	60	65	70	75	80	85	90	95	100	____

Deviation _____

Procurement Log

Item description	*Quantity*	*Purchase order number*	*Vendor*	*Date*		*Cost*	*Disposition*	*Comments*
				Ordered	*Received*			

Visible Emission Observer's Plant Entry Checklist

Source name and address	*Observer* *Agency* *Date of VE observation*
Previous company contact (if applicable) *Title*	
Purpose of visit	
Emission points at which VE observations to be conducted	
Authority for entry (see reverse side)	

Plant safety requirements

- ☐ *Hardhat*
- ☐ *Safety glasses*
- ☐ *Side shields (on glasses)*
- ☐ *Goggles*
- ☐ *Hearing protection*
  Specify _____
- ☐ *Safety shoes (steel-toed)*
- ☐ *Insulated shoes*
- ☐ *Gloves*
- ☐ *Coveralls*
- ☐ *Dust mask suggested*
- ☐ *Respirator(s)*
  Specify _____
- ☐ *Other*
- ☐ *Specify* _____

Company official contacted (on this visit)

Title

Visible Emission Observer's Plant Checklist (Continued)

Authority for Plant Entry: Clean Air Act, Section 114

(a)(2) the Administrator or his authorized representative upon presentation of his credentials -

(A) shall have a right of entry to, upon or through any premises of such person or in which any records required to be maintained under paragraph (1) of this section are located, and

(B) may at reasonable times have access to, and copy of any records, inspect any monitoring equipment or methods required under paragraph (1), and sample any emissions which such person is required to sample under paragraph (1).

(b) (1) Each State may develop and submit to the Administrator a procedure for carrying out this section in such State. If the Administrator finds the State procedure is adequate, he may delegate to such State any authority he has to carry out this section.

(2) Nothing in this subsection shall prohibit the Administrator from carrying out this section in a State.
(c) Any records, reports or information obtained under subsection (a) shall be available to the public except that upon a showing satisfactory to the Administrator by any person that records, reports, or information, or particular part thereof, (other than emission data) to which the Administrator has access under this section if made public would divulge methods or processes entitled to protection as trade secrets of such person, the Administrator shall consider such record, report, or information or particular portion thereof confidential in accordance with the purposes of Section 1905 of Title 18 of the United States concerned with carrying out this Act or when relevant in any proceeding under this Act."

*Confidential Information: Clean Air Act, Section 114 (see above) 41 **Federal Register** 36902, September 1, 1976*

*If you believe that any of the information required to be submitted pursuant to this request is entitled to be treated as confidential, you may assert a claim of business confidentiality, covering all or any part of the information, by placing on (or attaching to) the information a cover sheet, stamped or typed legend, or other suitable notice, employing language such as "trade secret," "proprietary," or "company confidential." Allegedly confidential portions of otherwise nonconfidential information should be clearly identified. If you desire confidential treatment only until the occurrence of a certain event; the notice should so state. Information so covered by a claim will be disclosed by EPA only to the extent, and through the procedures, set forth at 40 CFR, Part 2, Subpart B (41 **Federal Register** 36902, September 1, 1976.)*

If no confidentiality claim accompanies this information when it is received by EPA, it may be made available to the public by EPA without further notice to you.

Visible Emission Observation Form

SOURCE NAME		
ADDRESS		
CITY	STATE	ZIP
PHONE	SOURCE ID NUMBER	
PROCESS EQUIPMENT	OPERATING MODE	
CONTROL EQUIPMENT	OPERATING MODE	
DESCRIBE EMISSION POINT START STOP		
HEIGHT ABOVE GROUND LEVEL START STOP	HEIGHT RELATIVE TO OBSERVER START STOP	
DISTANCE FROM OBSERVER START STOP	DIRECTION FROM OBSERVER START STOP	
DESCRIBE EMISSIONS START STOP		
EMISSION COLOR START STOP	PLUME TYPE: CONTINUOUS ☐ FUGITIVE ☐ INTERMITTENT ☐	
WATER DROPLETS PRESENT: NO ☐ YES☐	IF WATER DROPLET PLUME: ATTACHED ☐ DETACHED ☐	
POINT IN THE PLUME AT WHICH OPACITY WAS DETERMINED START STOP		
DESCRIBE BACKGROUND START STOP		
BACKGROUND COLOR START STOP	SKY CONDITIONS START STOP	
WIND SPEED START STOP	WIND DIRECTION START STOP	
AMBIENT TEMP. START STOP	WET BULB TEMP.	RH,percent

Source Layout Sketch

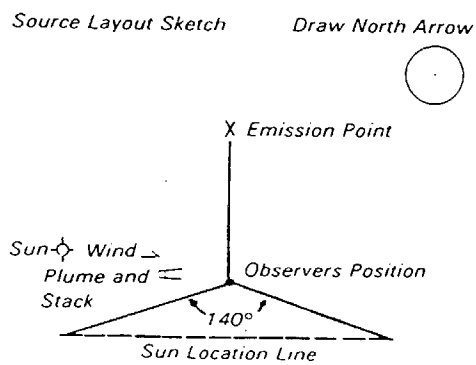

OBSERVATION DATE					START TIME				STOP TIME
MIN \ SEC	0	15	30	45	MIN \ SEC	0	15	30	45
1					31				
2					32				
3					33				
4					34				
5					35				
6					36				
7					37				
8					38				
9					39				
10					40				
11					41				
12					42				
13					43				
14					44				
15					45				
16					46				
17					47				
18					48				
19					49				
20					50				
21					51				
22					52				
23					53				
24					54				
25					55				
26					56				
27					57				
28					58				
29					59				
30					60				

AVERAGE OPACITY FOR HIGHEST PERIOD	NUMBER OF READINGS ABOVE % WERE
RANGE OF OPACITY READINGS MINIMUM	MAXIMUM
OBSERVER'S NAME (PRINT)	
OBSERVER'S SIGNATURE	DATE
ORGANIZATION	
CERTIFIED BY	DATE
VERIFIED BY	DATE

COMMENTS	
I HAVE RECEIVED A COPY OF THESE OPACITY OBSERVATIONS SIGNATURE	
TITLE	DATE

Visible Emission Observation Form

This form is designed to be used in conjunction with EPA Method 9, "Visual Determination of the Opacity of Emissions from Stationary Sources." Any deviations, unusual conditions, circumstances, difficulties, etc., not dealt with elsewhere on the form should be fully noted in the section provided for comments. Following are brief descriptions of the type of information that needs to be entered on the form; for a more detailed discussion of each part of the form, refer to the "User's Guide to the Visible Emission Observation Form."

**Source Name* - *full company name, parent company or division information, if necessary.*

**Address* - *street (not mailing) address or physical location of facility where VE observation is being made.*

Phone - *self-explanatory.*

Source ID Number - *number from NEDS, CDS, agency file, etc.*

**Process Equipment, Operating Mode* - *brief description of process equipment (include ID no.) and operating rate, % capacity utilization, and/or mode (e.g., charging, tapping).*

**Control Equipment, Operating Mode* - *specify control device type(s) and % utilization, control efficiency.*

**Describe Emission Point* - *stack or emission point location, geometry, diameter, color; for identification purposes.*

**Height Above Ground Level* - *stack or emission point height, from files or engineering drawings.*

**Height Relative to Observer* - *indicate vertical position of observation point relative to stack top.*

**Distance From Observer* - *distance to stack ±10%; to determine, use rangefinder or map.*

**Direction From Observer* - *direction to stack; use compass or map; be accurate to eight points of compass.*

**Describe Emissions* - *include plume behavior and other physical characteristics (e.g., looping, lacy, condensing, fumigating, secondary particle formation, distance plume visible, etc.).*

**Emission Color* - *gray, brown, white, red, black, etc.*

Plume Type:
Continuous - opacity cycle >6 minutes
Fugitive - no specifically designed outlet
Intermittent - opacity cycle <6 minutes

***Water Droplets Present* - *determine by observation or use wet sling psychrometer; water droplet plumes are very white, opaque, and billowy in appearance, and usually dissipate rapidly.*

***If Water Droplet Plume:*
Attached - forms prior to exiting stack
Detached - forms after exiting stack

***Point in the Plume at Which Opacity was Determined* - *describe physical location in plume where readings were made (e.g., 4 in. above stack exit or 10 ft after dissipation of water plume).*

**Describe Background* - *object plume is read against, include atmospheric conditions (e.g., hazy).*

**Background Color* - *blue, white, new leaf green, etc.*

**Sky Conditions* - *indicate cloud cover by percentage or by description (clear, scattered, broken, overcast, and color of clouds).*

**Windspeed* - *use Beaufort wind scale or hand-held anomometer; be accurate to ±5 mph.*

Wind Direction* - *direction wind is* ***from**; use compass; be accurate to eight points.*

**Ambient Temperature* - *in °F or °C.*

***Wet Bulb Temperature* - *the wet bulb temperature from the sling psychrometer.*

***Relative Humidity* - *use sling psychrometer; use local U.S. Weather Bureau only if nearby.*

**Source Layout Sketch* - *include wind direction, associated stacks, roads, and other landmarks to fully identify location of emission point and observer position.*

Draw North Arrow - *point line of sight in direction of emission point, place compass beside circle, and draw in arrow parallel to compass needle.*

Sun Location Line - *point line of sight in direction of emission point, place pen upright on sun location line, and mark location of sun when pen's shadow crosses the observers position.*

***Comments* - *factual implications, deviations, altercations, and/or problems not addressed elsewhere.*

Acknowledgment - *signature, title, and date of company official acknowledging receipt of a copy of VE observation form.*

**Observation Date* - *date observations conducted.*

**Start Time, Stop Time* - *beginning and end times of observation period (e.g., 1635 or 4:35 p.m.).*

**Data Set* - *percent opacity to nearest 5%; enter from left to right starting in left column.*

**Average Opacity for Highest Period* - *average of highest 24 consecutive opacity readings.*

Number of Readings Above (Frequency Count) - *count of total number of readings above a designated opacity.*

**Range of Opacity Readings:*
Minimum - lowest reading
Maximum - highest reading

**Observer's Name* - *print in full.*

Observer's Signature, Date - *sign and date after performing final calculations.*

**Organization* - *observer's employer.*

**Certifier, Date* - *name of "smoke school" certifying observer and date of most recent certification.*

Verifier, Date - *signature of person responsible for verifying observer's calculations and date of verification.*

*Required by Reference Method 9; other items suggested.
**Required by Method 9 only when particular factor could affect the reading.

Visible Emission Summary Data Sheet

Company _____ *Date* _____ *Location* _____

Start time _____ *Emission point* _____

Start no.	Total opacity	Average opacity	Start no.	Total opacity	Average opacity	Start no.	Total opacity	Average opacity	Start no.	Total opacity	Average opacity	Start no.	Total opacity	Average opacity	Start no.	Total opacity	Average opacity
1			37			73			109			145			181		
2			38			74			110			146			182		
3			39			75			111			147			183		
4			40			76			112			148			184		
5			41			77			113			149			185		
6			42			78			114			150			186		
7			43			79			115			151			187		
8			44			80			116			152			188		
9			45			81			117			153			189		
10			46			82			118			154			190		
11			47			83			119			155			191		
12			48			84			120			156			192		
13			49			85			121			157			193		
14			50			86			122			158			194		
15			51			87			123			159			195		
16			52			88			124			160			196		
17			53			89			125			161			197		
18			54			90			126			162			198		
19			55			91			127			163			199		
20			56			92			128			164			200		
21			57			93			129			165			201		
22			58			94			130			166			202		
23			59			95			131			167			203		
24			60			96			132			168			204		
25			61			97			133			169			205		
26			62			98			134			170			206		
27			63			99			135			171			207		
28			64			100			136			172			208		
29			65			101			137			173			209		
30			66			102			138			174			210		
31			67			103			139			175			211		
32			68			104			140			176			212		
33			69			105			141			177			213		
34			70			106			142			178			214		
35			71			107			143			179			215		
36			72			108			144			180			216		

Maximum average _____ *% Start number of six minute average* ____/ __

Number of nonoverlapping averages in excess of standard _____ *Listing start number of these averages* _____

Calculated by _____ *Date* _____ *Reviewed by* _____ *Date* _____

Quality Assurance Handbook M9-5.1 and M9-6.2

Method 9 Checklist for Auditors

Name of individual(s) audited _____

Affiliation _____

Auditor name _____ *Affiliation* _____

Date of audit _____ *Auditor signature* _____

Yes	No	Comment	Operation
___	___	_____	1. Equipment satisfactory
___	___	_____	2. Data forms completed
___	___	_____	3. Post-notification (courtesy obligation) performed
___	___	_____	4. Correct identification of point of emissions
___	___	_____	5. Plume associated with process generation point
___	___	_____	6. Credentials okay
___	___	_____	7. Observer acted in professional and courteous manner
___	___	_____	8. Proper observer position
___	___	_____	9. Opacity readings complete
___	___	_____	10. Ancillary measurements available
___	___	_____	11. Camera used to validate sightings/source identification
___	___	_____	12. Facility personnel given a copy of raw data
___	___	_____	13. Mutiple sources/plumes/outlets
___	___	_____	14. Lighting conditions satisfactory
___	___	_____	15. Background conditions (raining, etc.) satisfactory
___	___	_____	16. Slant angle recorded
___	___	_____	17. Fugitive emissions
___	___	_____	18. Time of day recorded
___	___	_____	19. Recertified within last 6 months

General comments:

☆U.S. GOVERNMENT PRINTING OFFICE: 1984/759-102/0899