Assessment of Reactive Organic Gases and Amines from a Northern California Dairy Using the USEPA Surface Emission Isolation Flux Chamber

CE Schmidt, schmidtce@aol.com

Tom Card, EMC, trcard@earthlink.net

Patrick Gaffney, CARB, pgaffney@arb.ca.gov

Purpose of the Discussion

- Present the USEPA flux chamber technology and the application for assessing air emissions from dairies
- Describe the ARB/SJV multi-phase research project and the results of the Phase 2 summer testing event (process flux, dairy emissions, pounds/cow/year)

Project Authority

- Co-Funded by ARB and SJVUAPCD
- Sponsored by the Central CA Ozone Study
- Work coordinated with other projects by the San Joaquin Valley Ag Tech Group
- Project Management by Patrick Gaffney, ARB
- Emission factors supporting SIPs/SB700

Project Scope of Work

- Developed a Site specific QAPP (Phase 1)
- Conducted a two-day field test (Phase 2) at the Merced dairy
- Over 40 flux chamber measurements were made at 11 types of emitting surfaces at a flushed lane dairy
- Analysis included speciated reactive organic gases, ammonia/amines, total organic compounds, and methane
- Empirical model developed to estimate emissions

Analytical Menu

- USEPA Method TO-15 (GC/MS) for VOCs, ROG (expressed as methane and hexane)
- NIOSH 2010 (IC) for ammonia and amines
- ASTM 1945 (GC/TCD) for methane
- USEPA Method TO-5 (HPLC/UV) for aldehydes/ketones
- USEPA Method TO-5 (HPLC/UV) for volatile organic acids

Dairy Unit Processes (sources)

- Flushed lanes: pre and post-flushed
- Solids storage piles*
- Lagoon* (inlet and outlet of lagoon)
- Solids in Solids separator*
- Bedding in pile for freestall*
- Freestall area

Dairy Unit Processes (continued)

- Barn turnout and corral area*
- Manure piles in turnout*
- Heifer pens (dry cow area)*
- Open feed storage (in barn feed lanes)
- Milk parlor (wastewater effluent stream)*

Note- Process in sun* tested for diurnal emissions

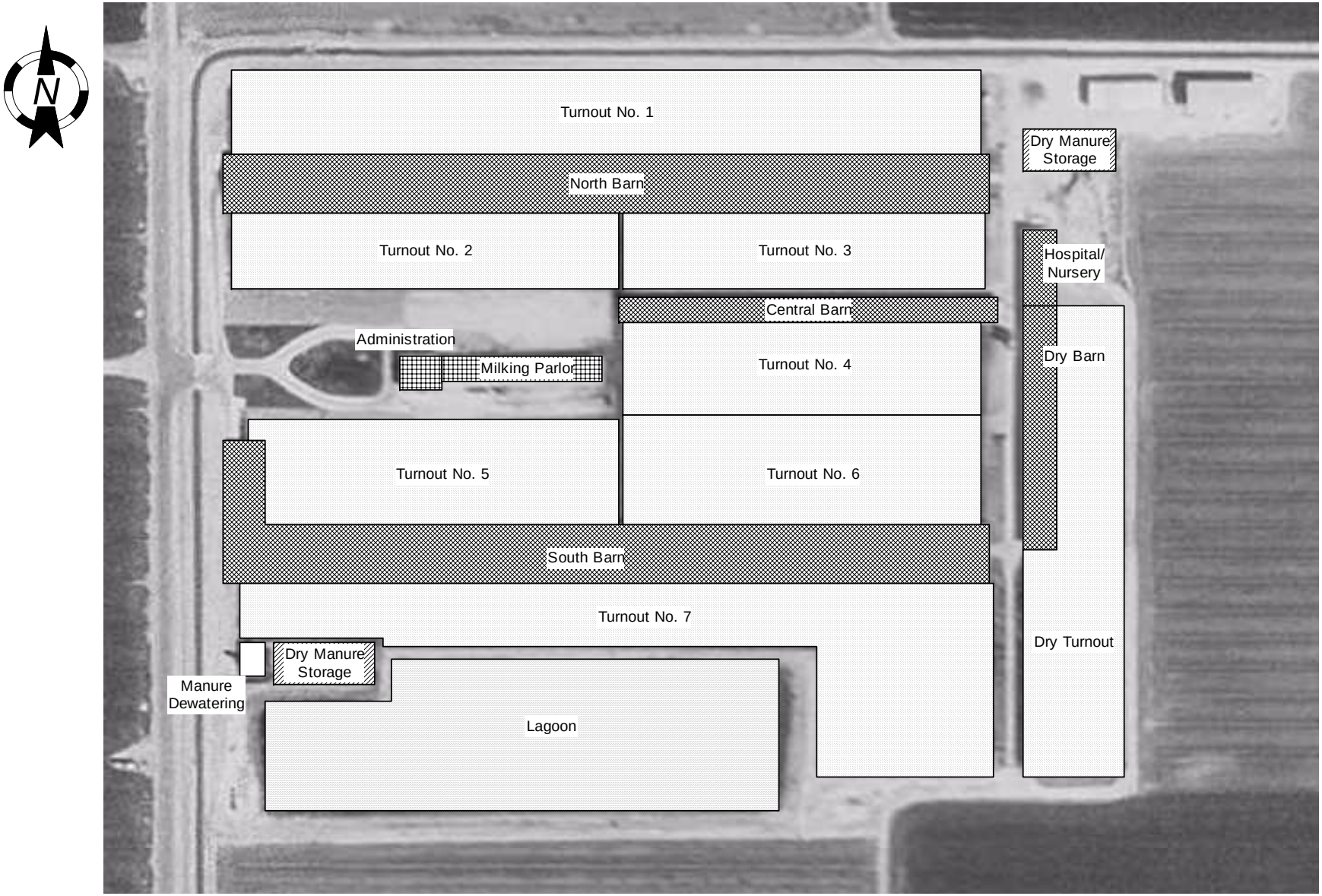

Figure 1
Test Dairy
Site Plan

What’s A Flux Chamber?

- A flux chamber is a device used for measuring the flux of gas species from an area source
- There are a variety of ‘flux chambers’, static and dynamic
- USEPA Recommended Technology, mixed tank reactor operated at atmospheric pressure

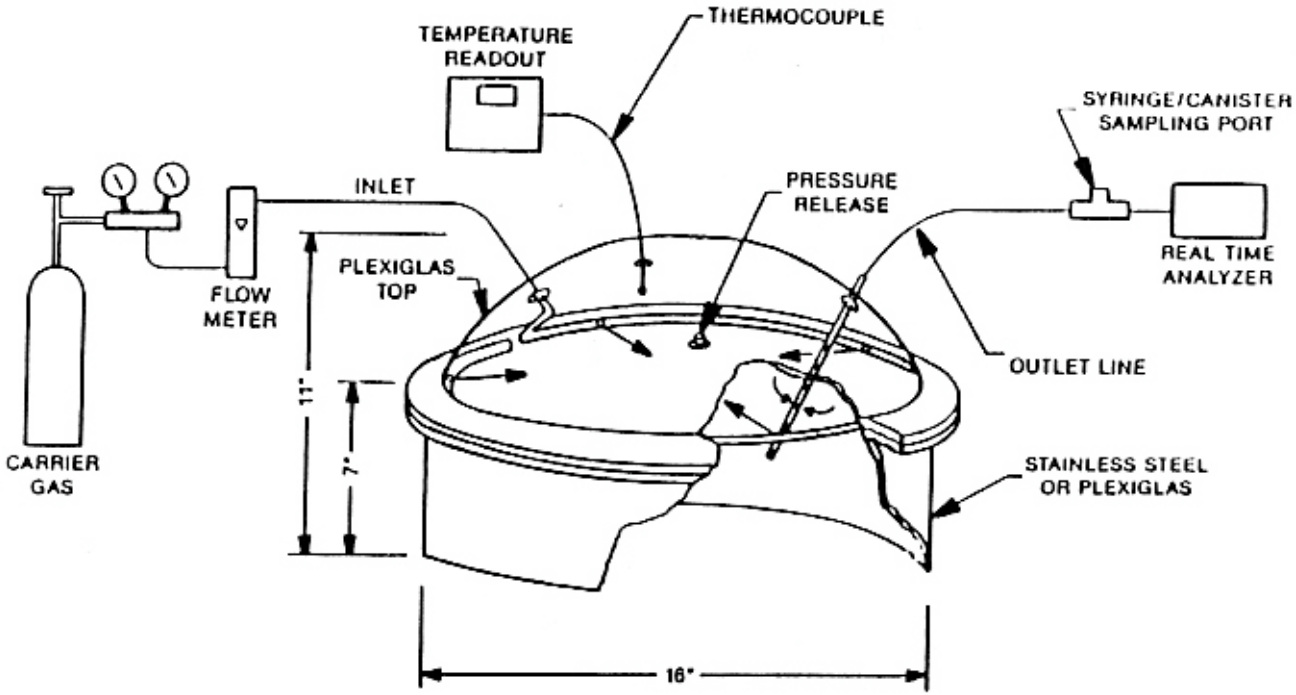

CUT AWAY TO SHOW SWEEP AIR INLET LINE AND THE OUTLET LINE

Four Groups of Area Source Assessment Technologies

- Direct Measurement
- Indirect Measurement
- Predictive Modeling
- Fence line Measurement and Dispersion Modeling

Direct Measurement Technologies

- Flux or emissions are measured, not determined by modeling
- Screening-level: soil gas, static headspace sample, static headspace chamber
- In-Depth Level: flux chamber, wind tunnel

So Why Use The Flux Chamber Technology Over the Others?

- Assessment does not involve predictive modeling
- All parameters of the measurement technology are controlled and an estimate of accuracy/precision is made per application
- Most cost-effective assessment technology
- Can differentiate between sources of emissions at a complex-source facility

Theory of Operation

- Mixed tank reactor- CSTR
- Clean sweep air is added to the chamber
- Chamber is operated for 5 residence times
- Chamber contents come to equilibrium
- Gas sample is collected for study compounds (grab or integrated sample collection)
- Flux is calculated knowing sweep air flow rate, surface area, and concentration

Goal of the Assessment Using the Flux Chamber

- Measure the compound (or odor) flux from the area source without disturbing the flux and without predictive modeling
- Provide a data set that represents the area source emissions (flux times surface area is emissions in mass/time)
- Report the range, average, and maximum compound flux as a function of the area source (i.e., spatial, process, chemical/physical source changes as a function of time)

Advantages of Using the Direct Measurement/Flux Chamber

- Only EPA recommended in-depth assessment technology applicable for most area sources
- Known accuracy and precision
- Very low sensitivity using appropriate sample collection and analysis
- Spatially specific technology; defines unique emission sources
- Can differentiate the sources of ubiquitous compounds
- Provides the preferred input for dispersion assessment and compliance reporting

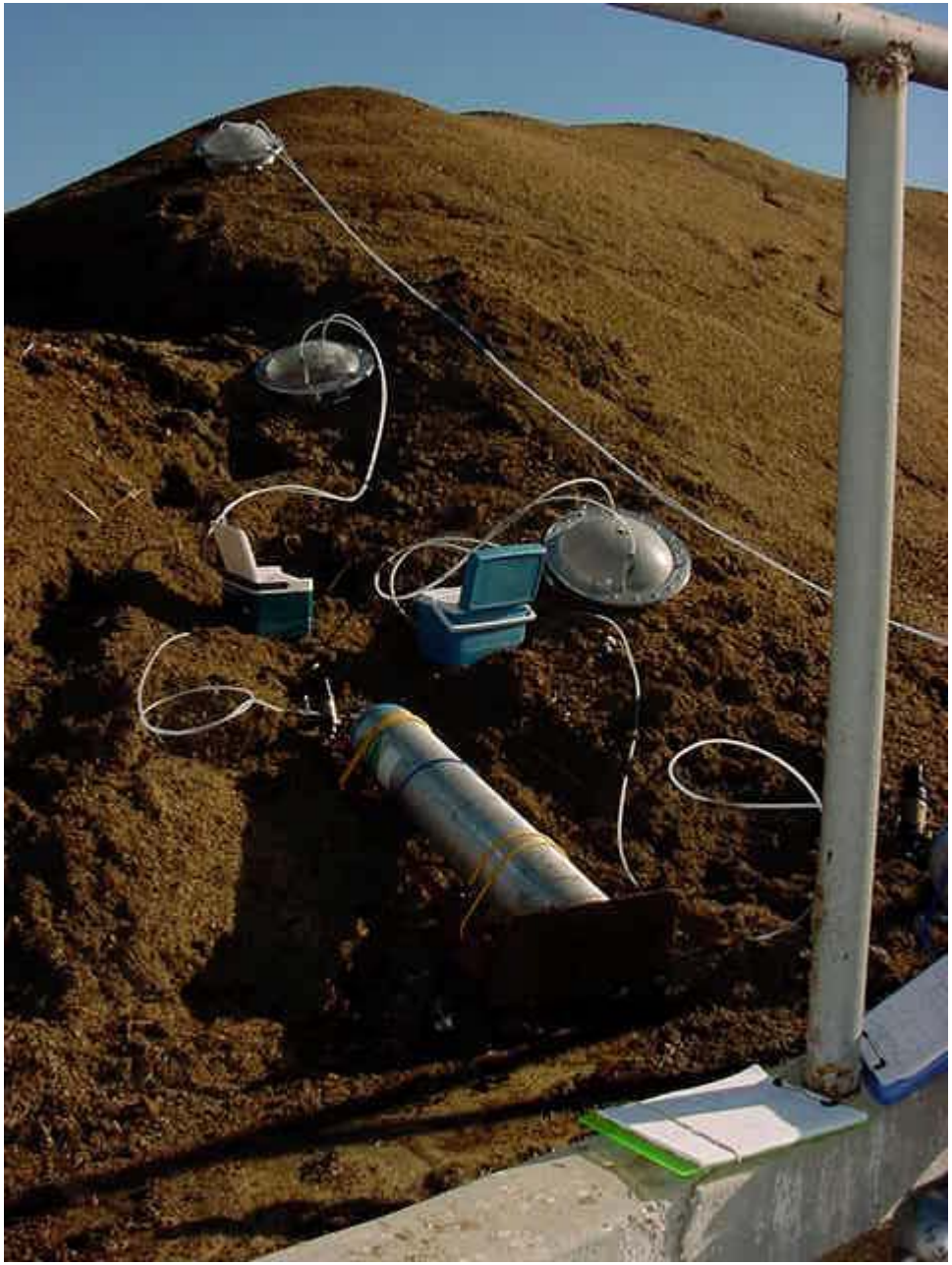

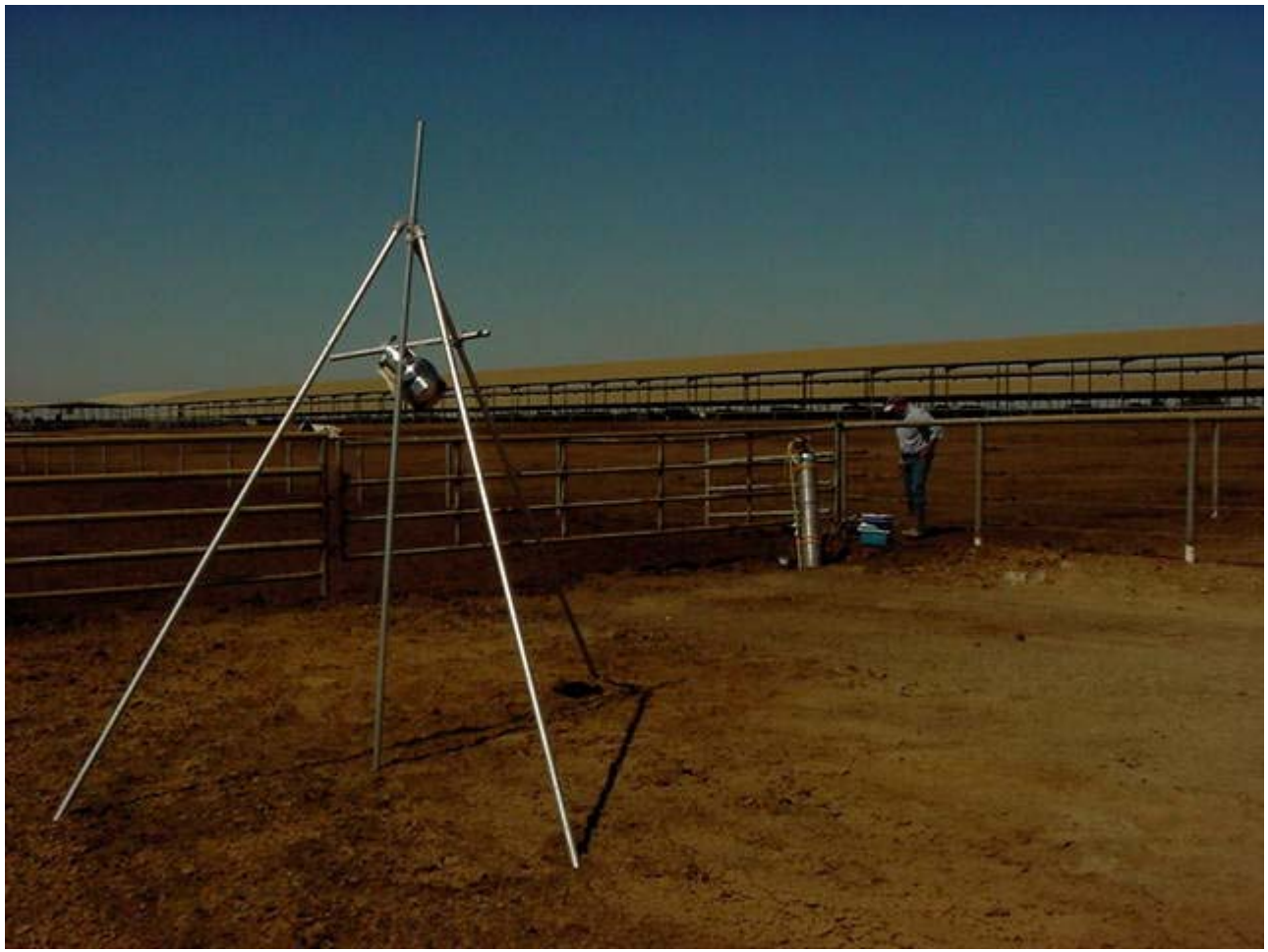

Merced Dairy Ammonia Emissions (As Tested)

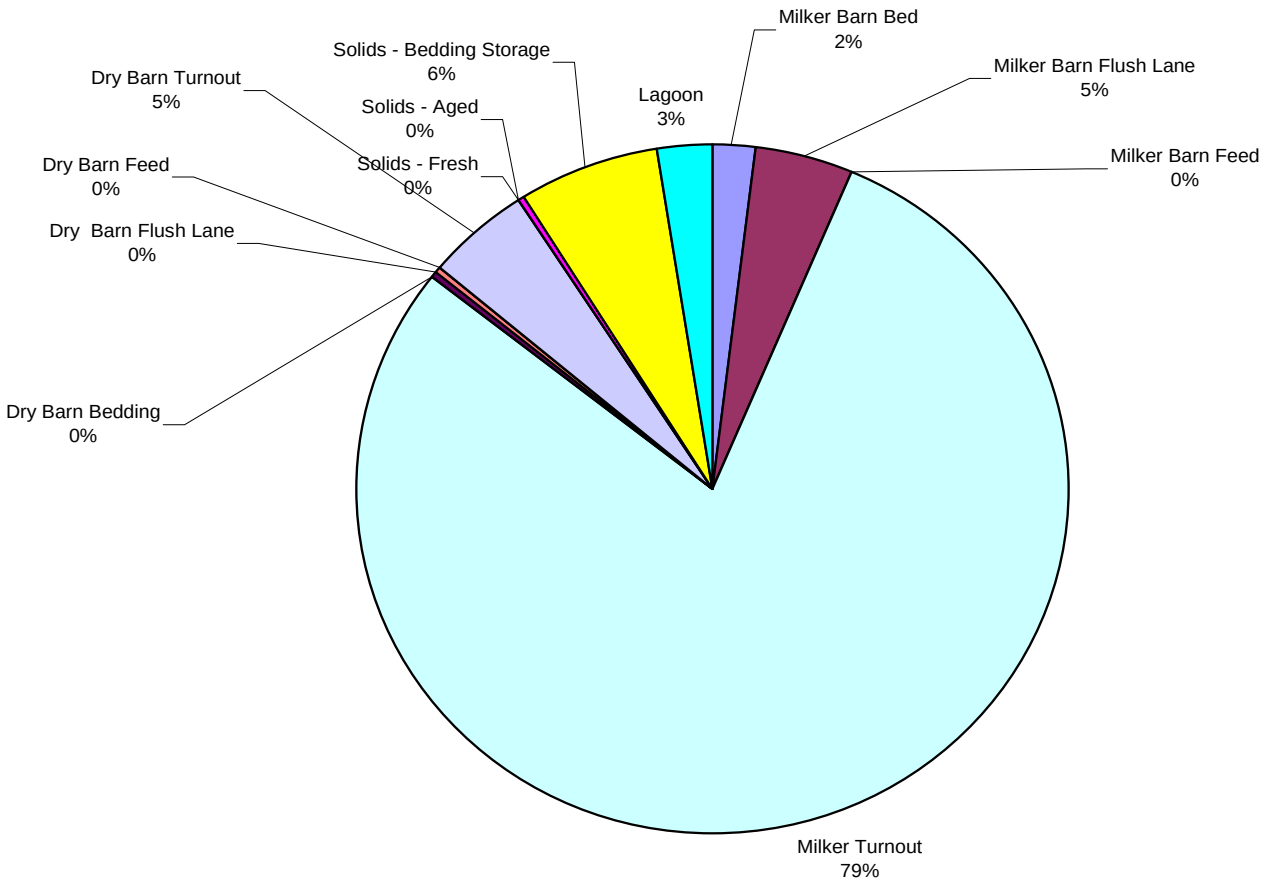

Merced Dairy TNMHC (as CH4) Emissions (as tested condition)

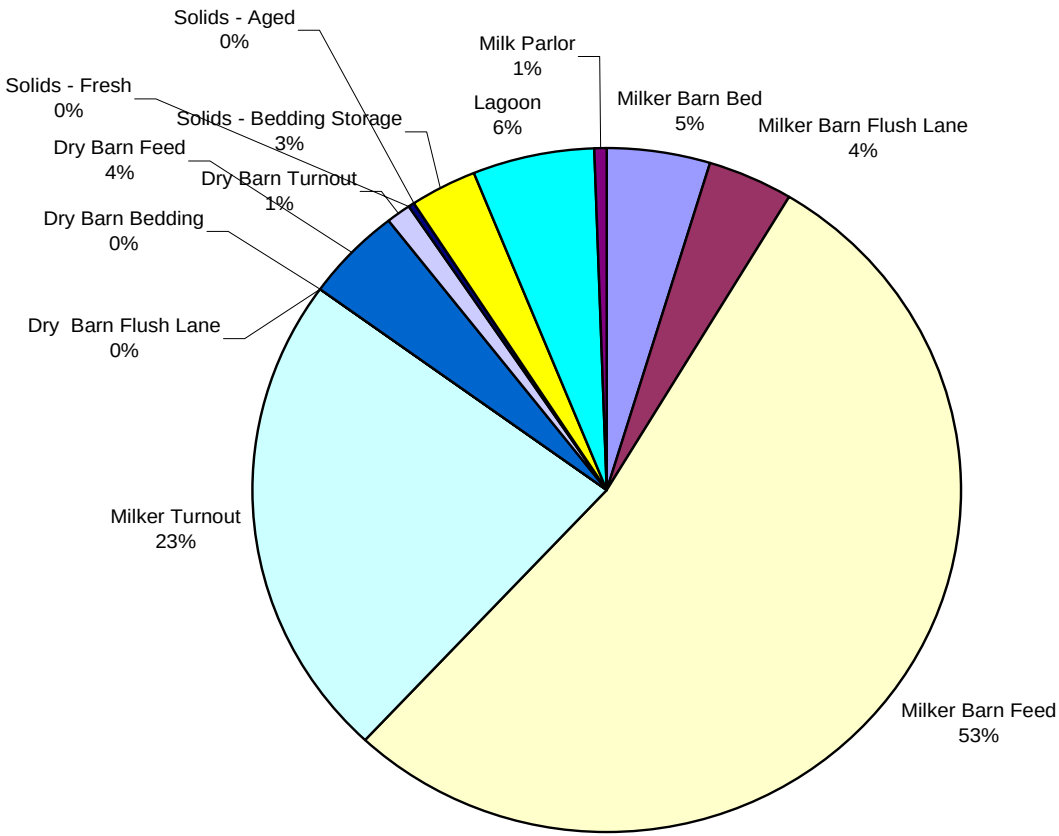

Dairy Emissions- Phase 2 Summer Emissions			
Compounds Sorted by Compound Mass		**(Continued)**	
Component	**Lbs/cow/year**	**Component**	**Lbs/cow/year**
Ammonia	245		
Ethylamine	0.90	1,2-Dibromo-3-chloropropane	0.076
		Naphthalene	0.061
Methane	283	Carbon disulfide	0.056
TNMHC as Hexane	3.6	Acetaldehyde	0.049
TNMHC as Methane	19.4	Vinyl acetate	0.038
		2-propanol	0.033
Ethanol	1.338	1,4 Dioxane	0.032
2-Butanone	0.288	t-1,4-Dichloro-2-butene	0.031
Acetone	0.277	m & p-Xylene	0.030
Acetone	0.225	Isobutyl alcohol	0.024
1,2,4-Trichlorobenzene	0.169	1,2-Dichlorobenzene	0.024
Cyclohexane	0.132	Toluene	0.023

Preliminary Phase 2 ROG Results

- Schmidt: 3.6 lbs to 19 lbs ROG/cow/year based on flux chamber measurement
- Current Emission Factors: 12.8 lbs ROG/cow/head base on 1938 chamber study
- Region 9 EPA: 5.2 lbs ROG/cow/year based on flux chamber measurement

Preliminary Phase 2 NH3 Results

- Schmidt: 245 lbs NH3/cow/year based on summer flux chamber measurement at one dairy
- SCAQMD: 18 lbs NH3/cow/year based on winter/summer flux chamber measurement at two dairies (dry lot dairies)

Literature Dairy NH3 EFs	**Low**	**High**
Source	**Lb/cow/yr**	**Lb/cow/yr**
NOAA 1999	50.38	
Pinder et al	28.82	122.1
Sutton et al 1995	48	72
Corsi 2000	43	101
USEPA 2001	51	
USEPA 2002	55	
EEA 2001	54.2	
Groot Koerkup 1998	9.1	26.8
Dutch Ag	9.5	24.2
Pedersen et al 2004	15.3	
Max is 122 lb/cow/yr; Min is 9.1 lb/cow/yr		
Average is 46, st.dev. 34		

Gross Conclusions

- Barn feed source dominates ROG process emissions
- The dominate ROG species is ethanol
- Ammonia is the dominate amine
- Freshly scraped turnouts dominate ammonia emissions
- ROG and ammonia emissions relatively low from the wastewater lagoon

Summary

- Process specific flux and emission estimates for a representative Northern California dairy were generated for total and speciated ROG speciated emissions
- Facility-wide emissions were calculated
- Estimate of ROG (total), ROG species, and amine species per cow emission factors were generated

Future Research

- Phase 3 research may include:
  - **Option A**: More testing at the same dairy to evaluate seasonal emissions at significant sources (winter season)
  - **Option B**: Testing at a different dairy to evaluate dairy-to-dairy variability
  - **Approach Modifications**: lab method for VOAs, diurnal testing, focus on major sources, operations and facility utilization consideration