California Environmental Protection Agency

AIR RESOURCES BOARD

AIR QUALITY SURVEILLANCE BRANCH

STANDARD OPERATING PROCEDURES

FOR

TELEDYNE/ADVANCED POLLUTION INSTRUMENTS (API)
MODELS 400E and T400 OZONE ANALYZER

AQSB SOP 002

First Edition

MONITORING AND LABORATORY DIVISION

April 2012

DRAFT

California Environmental Protection Agency
AIR RESOURCES BOARD

Approval of Standard Operating Procedures (SOP)

Title: TELEDYNE/ADVANCED POLLUTION INSTRUMENTS (API) MODEL 400E AND T400 OZONE ANALYZERS

SOP: AQSB SOP 002, First Edition

Section: Operation Support Section

Branch: Air Quality Surveillance Branch (AQSB)

Division: Monitoring and Laboratory Division (MLD)

Prepared by: Matthew Vona, Air Pollution Specialist

Approval: This SOP has been reviewed and approved by:

_____ _____
Reginald L. Smith, Manager Date
Operation Support Section
Air Quality Surveillance Branch

_____ _____
Kenneth R. Stroud, Chief Date
Air Quality Surveillance Branch

DRAFT

TABLE OF CONTENTS

Teledyne/Advanced Pollution Instruments
Model 400E and T400 Ozone Analyzers

		Page(s)	Date
1.0	**GENERAL INFORMATION**	05-07	04/12
1.1	Introduction	05	
1.2	Principle of Operation	05-06	
1.3	API T400 and 400E Comparison	05-07	
1.4	Safety Precautions	07	
2.0	**INSTALLATION PROCEDURE**	08-14	04/12
2.1	General Information	08	
2.2	Physical Inspection	08	
2.3	Instrument Siting	08	
2.4	Strip Chart Recorder Connection	09	
2.5	ESC 8800 Data Logger Connections	09	
2.6	ESC Data Logger Connections for IZS models	10	
2.7	CARBLogger Connection	11	
2.8	Operation Verification	12-13	
3.0	**CONFIGURATION**	14-15	04/12
3.1	Instrument Configuration	14	
3.2	ESC Data Logger Configuration	14	
3.3	Strip Chart Recorder Configuration	14	
3.4	CARBLogger Configuration	15	
4.0	**CALIBRATION INFORMATION**	16	04/12
4.1	Calibration Introduction	16	
4.2	Calibration Overview	16	
4.3	Calibration Apparatus	16	
5.0	**CALIBRATION PROCEDURES**	17-22	04/12
5.1	Calibration at Altitude	17	
5.2	AS-IS Calibration	17-20	
5.3	Final Calibration	20-21	
5.4	Internal Zero Span (IZS) calibration	21-22	
5.5	Automatic Zero / Span Check	22	

DRAFT

TABLE OF CONTENTS (Cont.)

Teledyne/Advanced Pollution Instruments
Model 400E and T400 Ozone Analyzers

		Page(s)	Date
6.0	**ROUTINE SERVICE CHECKS**	23-24	04/12
6.1	General Information	23	
6.2	Daily (or Each Visit) Checks	23	
6.3	Weekly Checks	23	
6.4	Monthly Checks	24	
6.5	As Required Checks	24	
6.6	Semi-Annual Checks	24	
7.0	**MAINTENANCE AND PROCEDURES**	25	04/12
7.1	General Information	25	
8.0	**TROUBLESHOOTING**	26	04/12
8.1	General Information	26	

REFERENCES.....04/12

AQSB Monthly Quality Control Maintenance Check Sheet 002..... 29
AQSB API 400E Calibration Report 002..... 29

TABLES AND FIGURES 04/12

Figure 1 Front panel of API T400 6
Figure 2 Front panel of the API 400E.....7
Figure 3 Instrument connections to the strip chart recorder and data logger
…… 9
Figure 4 APIT400 / 400E IZS to ESC 8816 and 8832.....10
Figure 5 APIT400 IZS and 400EIZS connections to the ESC 8800. 10
Figure 6 Back panel RS232 connections 11
Figure 7 Front panel of the API 400 E.....12
Figure 8 API T400 digital display.....13
Table 1 Standard AQSB API 400E/T400 Configuration table 14
Table 2 Instrument IZS configuration parameters.....22
Table 3 Maintenance schedule 23

DRAFT

1.0 GENERAL INFORMATION

1.1 Introduction:

This Standard Operating Procedure (SOP) describes procedures used by the California Air Resources Board (CARB) Air Quality Surveillance Branch (AQSB) to operate the Teledyne/Advanced Pollution Instruments Model 400E Ozone Analyzer (TAPI 400E) as well as the Teledyne/Advanced Pollution Instruments Model T400 Ozone Analyzer (TAPI T400) to measure ozone levels in ambient air. Because of similarities, these two instruments will be collectively referred to as “the instrument” unless otherwise required. This procedure is designed to supplement the instruction manual by describing hardware or operating procedures as implemented by the AQSB. It is not the intent of this SOP to duplicate or replace the instruction manual. A separate document is available for each instruments acceptance test procedures.

1.2 Principle of Operation:

The instrument is designed to accurately measure ambient ozone concentrations, despite the presence of interfering compounds. It detects ozone by measuring the absorbance of 254 nm UV light emitted by a mercury vapor lamp and collected by a detector at the other end of the sample gas path. Using Beer-Lambert law, this UV absorbance can be correlated to the concentration of ozone and any other compound which may absorb UV light at this frequency.

$$A = \log_{10}\left(I_o / I\right)$$

Equation 1 - Beer-Lambert law where Io is the original intensity, I is the post sample gas intensity, and A is the absorbance.

In order to correct for interfering compounds, the instrument calculates each value by taking the difference of two measurements and subtracting the difference.

$$A_{total} = A_i + A_{O3}$$

$$A_{O3} = A_{total} - A_i$$

Equation 2 - In the above equation, Atotal , Ai, and AO3 stand for total, interfering compound, and ozone absorbance respectively. Total absorbance can be measured in the O3 measurement sample. Absorbance of the interfering compounds are measured in the O3 reference sample. The partial absorbance of the ozone is then calculated as the difference of the two.

For the interference measurement, the UV light passes through a band-pass filter and through a glass tube which is filled with ambient air. The UV light absorbance is subsequently measured by the detector located on the opposite

DRAFT

side of the chamber. This initial measurement is commonly referred to as Ozone Measured (or “O3 Meas” on the front panel).

For the second measurement, sample air is scrubbed of all ozone and a resulting reference measurement is taken (or “O3 Ref” on the front panel). The amount of UV radiation absorbed by ozone in the sample is then calculated as the difference of the actual absorbance during the O3 Meas and the scrubbed O3 Ref measurement cycles. For a more detailed discussion of the analyzer's measurement principle, please reference the manufacturer's instruction manual.

1.3 The API model 400E and T400 analyzer comparison:

The T400 and 400E are essentially equivalent in all analytical aspects. Both use the same underlying technologies. The specifications for both instruments are almost identical to one another. The only significant, documented difference between the two is that the T400 has a color touch screen and 2 USB ports on the front, whereas the API 400E has an LCD display.

Figure 1 400 T IZS front panel

DRAFT

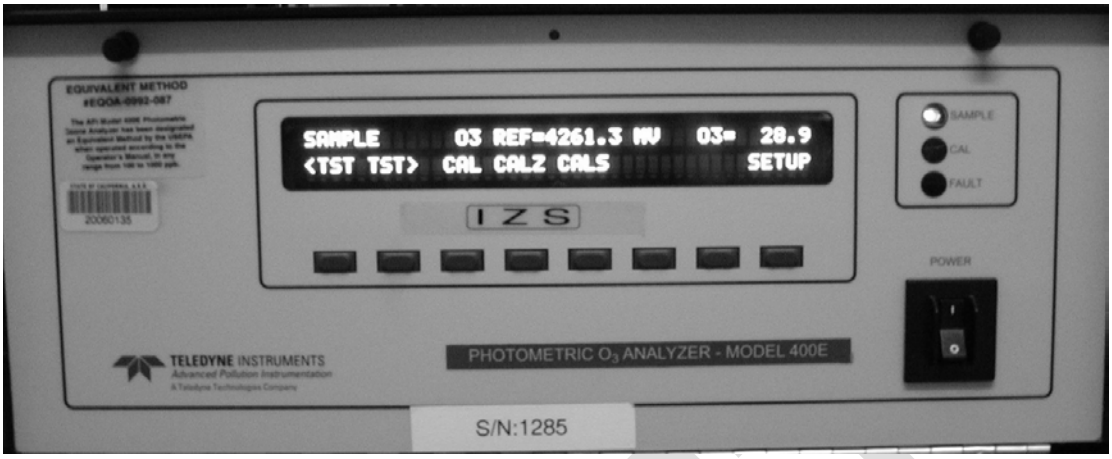

Figure 2 Front panel of the API 400 E.

1.4 Safety Precautions:

Prior to cleaning the analyzer or performing any maintenance on the instrument, place the MAIN power switch to the OFF position, and unplug the power cord. Avoid the use of chemical agents which might damage components.

Always use a three-prong, grounded plug on this analyzer. Adhere to general safety precautions when using compressed gas cylinders (e.g., secure cylinders, vent exhaust flows).

DRAFT

2.0 INSTALLATION PROCEDURE

2.1 General Information:

The instrument is designed to be installed in an environmentally controlled environment. Normally the instrument should be mounted in a standard 19" instrument rack.

2.2 Physical Inspection:

The instrument is normally shipped with the following standard equipment when ordered by the Operations Support Section:

1. Power cord
2. Instruction manual
3. Side rails

Upon receiving the instrument, confirm that the instrument is in good working order and check for damage. If any damage is observed, contact your immediate supervisor. Prior to installation of the instrument, check the following:

1. Verify no apparent shipping damage.
2. Check that all connectors are fully inserted.
3. Check that all mechanical connections are tight.
4. Open and remove the internal shipping screws on the pump and the internal foam blocks.

2.3 Instrument Siting:

The instrument should be sited in accordance with the United States Environmental Protection Agency (U.S. EPA) Title 40, Code of Federal Regulations Part 53 and USEPA Designated Automated Equivalent Method EQOA-0992-087. See also the *Model 400E Ozone Analyzer Instruction Manual*, Section 2.2 "EPA Equivalency Designation" and the *Model T400 Photometric Ozone Analyzer*, Section 2.2 "EPA Equivalency Designation" for a detailed list of EPA designation related siting requirements.

DRAFT

2.4 Strip Chart Connections:

The instrument has an eight-pin output connector strip on the rear panel. The first two pins (A1) are the ozone concentration output for connection to the chart recorder. The pins are marked plus and minus and must be connected accordingly.

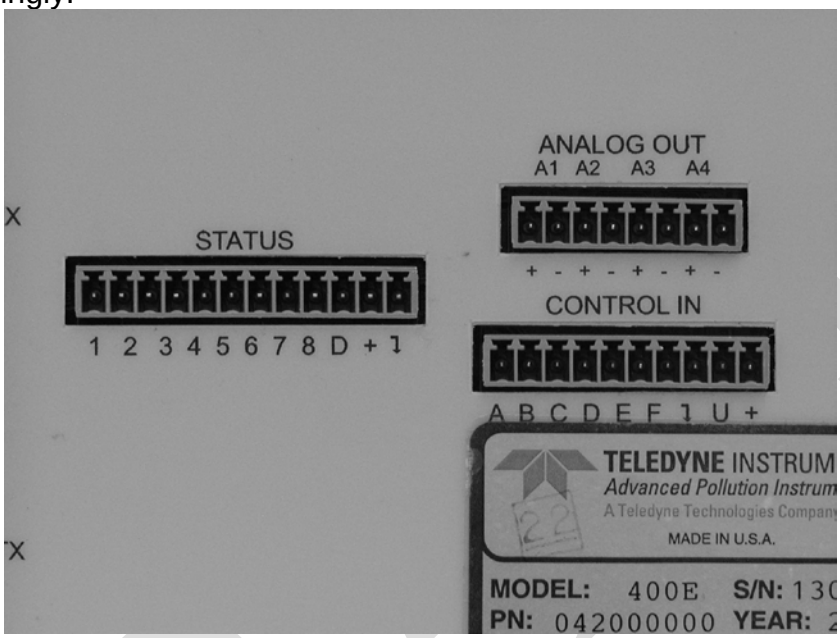

Figure 3 Instrument connections to the strip chart recorder and data logger.

2.5 ESC Data Logger Connections:

Both instruments have eight-pin analog output connector strips on the rear panel. These lines are used to produce the voltage for the data logger. Pins 3 and 4 (A2) are the ozone concentration output for the ESC data logger. The pins are marked plus and minus and must be connected accordingly.

For the T400IZS, follow the below steps in order to confirm that pin 7 works appropriately:

- From the front menu, enter the [Setup] menu.
- Hit the [More] key to advance to and select the [DIAG] menu.
- Use the 929 passcode to enter the [DIAG] sub-menu and select the [Factory Options] submenu.
- If not already configured, edit the [Alternate Status Output] condition to display “On”.

DRAFT

2.6 ESC Data Logger Connections for IZS models:

In addition to producing the voltage for data logging purposes, the API 400E and T400 IZS model status outputs must be connected into the ESC data loggers in such a manner that calibration cycles can be flagged (See Figure 4 and Figure 5 below).

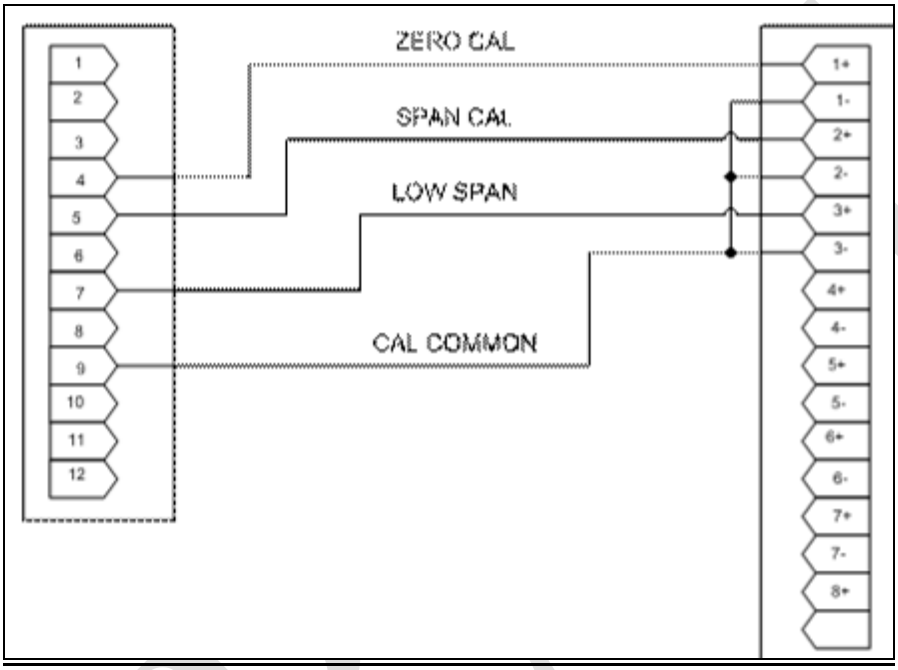

Figure 4 API T400 / 400E IZS to ESC 8816 and 8832 connections.

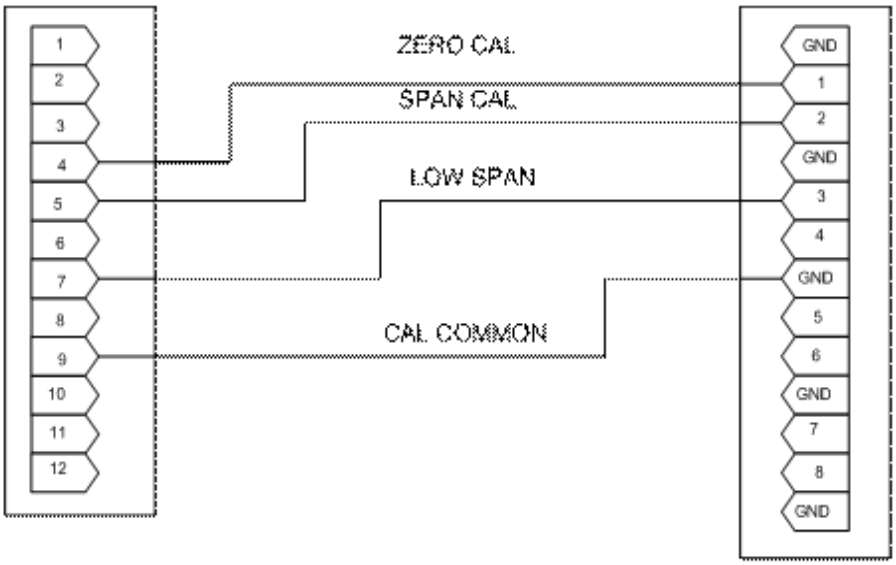

Figure 5 API T400 IZS and 400E IZS connections to the ESC 8800 connection.

2.7 CARBLogger Connection:

In some stations, AQSB may deploy CARBLogger digital data loggers in order to obtain one minute, digital data. In these situations, the RS-232 port should be made active using the front control panel of the instrument. By default the following communications settings should be used:

- COM2 ON
- BAUD RATE=9600
- Instrument ID=400

After connecting an RS232 cable to the back of the instrument from the CARBLogger box to the COM 2 port. Ensure that both the amber and green RX/TX lights located above the COM 2 interface are lit. If not, toggle the DCE/DTE switch located underneath the COM 1 port. No additional connections are required.

Note: In this mode, the USB ports located on the front of the T400 will be disabled.

For assistance in configuring CARBLogger itself, contact the Operations Support Section (OSS).

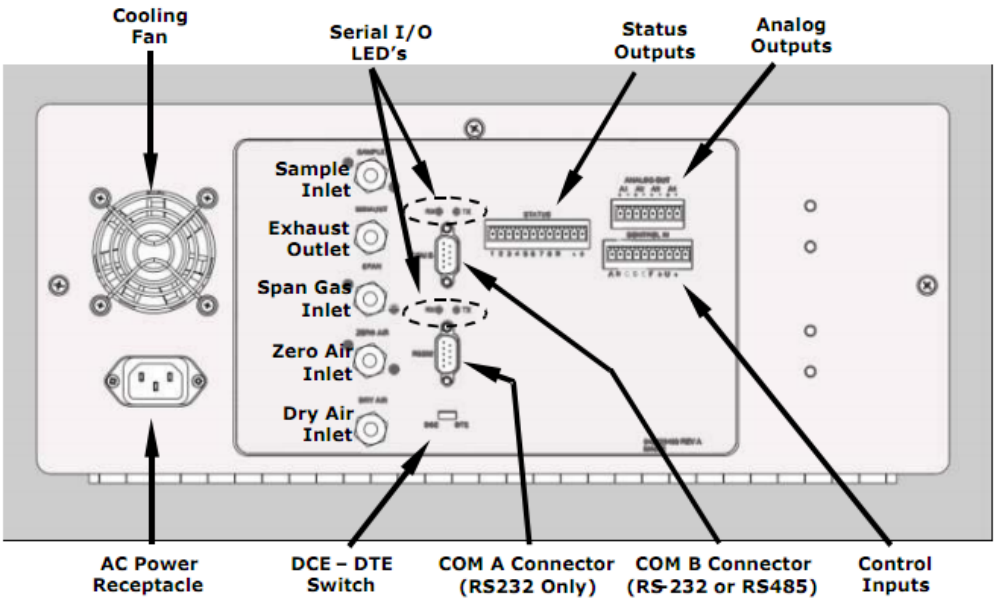

Figure 6 Back panel rs232 connections

2.8 Operation Verification:

NOTE: Prior to operation of the instrument, operators must read the respective instruction manual to familiarize themselves with the operation of the instrument.

Prior to operating the API 400E or API T400, ensure that the proper connections have been made. In summary, at most ARB monitoring locations this involves the following connections:

- Connect the sample inlet line from the manifold to the sample port on the rear panel.
- Connect the pump exhaust to a suitable vent outside the analyzer area.
- Connect the power cord to an appropriate power outlet.
- Connect recording devices to the terminal strip on the rear panel.

After proper connections have been made, turn on the power switch.

Figure 7 Front panel of the API 400 E.

On the API 400E the display will show a single dash on the left side of the screen for approximately 30 seconds. Subsequently, a boot progress meter will be displayed showing the percent completion of loading the operating system. The API 400E should automatically enter into sample mode after reboot. The display will now show “SYSTEM RESET” on the top display line, the green sample light on the right front of the panel should be on, and the red fault light should be flashing with the word “SAMPLE” flashing in the upper right hand of the display until the warm-up cycle has completed. Allow approximately one hour for the instrument to stabilize.

Review all diagnostic values by repeatedly depressing the first [<TST] or second [TST>] command keys on the front of the instrument. Compare these values to those listed on the factory final checkout sheet in the instruction manual or those listed on the Operation Support Sections Instrument Laboratory Data Sheet.

Figure 8 API T400 digital display

On the API T400, the display will show the API factory label, and a message to indicate that it is loading. The T400 will automatically enter into the sample mode after reboot and display “SYSTEM RESET” across the bottom of the screen. A blinking red “fault” light on the left side of the display will indicate that the system has been rebooted.

Compare these values to those listed on the factory final checkout sheet in the instruction manual or those listed on the Operation Support Sections Instrument Laboratory Data Sheet. Verify that the test parameters are within the limits prescribed by Table 1, API 400E / T400 Standard Configuration Table.

If warning messages persist after the 30 minutes warm up period is over, investigate their cause using the troubleshooting guidelines provided in the instruction manual.

3.0 CONFIGURATION

3.1 Instrument Configuration

The instrument is usually configured by the ARB's Operation Support Sections Instrument Laboratory and requires no field configuration. However, field staff are strongly encouraged to verify that their instrument is properly configured.

TEST PARAMETER	NOMINAL	RANGE
Time	Current PST time	+/- 2 minutes
Range (ppb)	500	0 to 1000
Stabil (Standard Deviation of O3 Readings)	0.1 – 0.3	< 1 w. zero air
O3 Meas (Current V/F conv MV, measured channel)	4000	3500 to 4600 *
O3 Ref (Current V/F conv MV, reference channel)	4000	3500 to 4600 *
O3 Gen (IZS ref channel feedback)	+/- 10% demand	80-5000 MV
O3 Drive (Drive voltage for O3 Gen Lamp)	+/- 10% demand	0-5000 MV
Pressure (Absolute Pressure, inHg)	Ambient Press.	29 to 31
Sample Fl (Sample Flow through Analyzer, c/min)	800	800 +/- 80
Sample Temp (°C)	Ambient Temp	Ambient +/- 10°
Photo LMP (Photometer Lamp Housing Temp, °C)	58 C	58 +/- 2
O3 Gen Temp (O3 Generator Housing Temp, °C)	48 C	+/- 1°
Box Temp (Internal Box Temp, °C)	Ambient Temp	Ambient +/- 10°
Slope (Internal Formula, Slope)	1.00	0.9 to 1.1
Offset (Internal Formula, Offset)	0.0	-5.0 to 5.0

Table 1 Standard AQSB API 400E/T400 Configuration Table
** See UV Source Lamp Adjustment section of the appropriate instruction manual.*

3.2 ESC Data Logger Configuration

ESC data logger channel configuration for the instrument is in the AQSB SOP for the datalogger model you are using. In most cases, set-up for the T400 is identical to the setup for the API model 400E. The data logger channel (A2) for the ozone analyzer must be configured for a 0 to 1 volt signal equaling 0 to 500 ppb assuming the range of the instrument is set to 500 ppb.

3.3 Strip Chart Recorder Configuration

Strip chart channel configuration for the instrument is covered in the AQSB SOP 604. In most cases configuration of the strip chart channel for the API T400 is identical to the API 400E. In general, the strip chart channel (A1) for the ozone analyzer must be configured for a 0 to +1 voltage output range, with units from 0 – 500 ppb. The strip chart recorder color should be set to light green.

DRAFT

3.4 CARBLogger Configuration:

The California Air Resources Board, Air Quality Surveillance Branch has expanded its air monitoring capability by including digital based data acquisition and logging methods. CARBLogger is an open source, digital diagnostic and data logging system developed by in-house by AQSB staff. CARBLogger was designed to provide minute-based, digital data recording and alerts for a variety of instruments. AQSB staff can configure CARBLogger by following the instructions on the text based user interface provided by the program. For additional questions or concerns, please contact the Operations Support Section.

DRAFT

4.0 CALIBRATION INFORMATION

4.1 Calibration Introduction:

A calibration is a procedure for aligning or checking the output of an instrument to a known "true" standard. To ensure the quality of the data provided by the API 400E or T400, the analyzer must be calibrated prior to use, after any major maintenance, and after every six months of use.

AQSB utilizes two forms of "calibration", nominally referred to as "AS-IS" and "Final" calibrations. An "AS-IS" calibration is performed initially to asses the instruments accuracy. The "AS-IS" calibration verifies the accuracy of the recently generated data; usually back to the previous calibration. A "Final" calibration is performed after an instrument has been aligned to a "true" standard. Typically an "AS-IS" calibration is performed to determine if the instrument warrants further maintenance. If it does then an alignment, followed by a "Final" calibration is performed. This section of the SOP provides a list of the necessary equipment and the correct procedures to accurately calibrate the analyzer.

4.2 Calibration Overview:

Test concentrations for ozone must be obtained in accordance with UV photometric calibration procedures listed in 40 CFR 50 Appendix D (Measurement Principle and Calibration Procedure for the Measurement of Ozone in the Atmosphere) or by means of a certified ozone transfer standard. The transfer standard must be traceable to a primary ultraviolet photometer and recertified as needed.

It is recommended that the test concentration for ozone using an ozone transfer standard should be delivered directly into the manifold.

4.3 Calibration Apparatus:

1. Certified Ozone/Gas Transfer Standard.
2. One-quarter inch O.D. Teflon tubing for air flow connections.
3. Zero air supply.
4. Calibrated laminar flow device for measuring air flow (mass flow meter).
5. Calibration report forms.
6. Conditioned calibration line if using calibrator for ozone source.

DRAFT

5.0 CALIBRATION PROCEDURES

To ensure the quality of the data collected within the ARB's air monitoring network, **ALL** instruments used in the network must be calibrated

- during initial field installation and every six months thereafter,
- following physical relocation,
- after any major maintenance or repair,
- after an instrument has drifted outside of acceptable QC limits,

Multi-point instrument calibrations at all stations within the AQSB network shall be performed in a consistent manner, so that all network monitoring stations in all areas of the State are calibrated in a similar fashion. **Instruments must be calibrated in accordance with the appropriate AQSB SOP and/or appropriate instrument manual.**

Multi-point instrument calibrations should be conducted such that all instruments are challenged at a minimum of four (4) different gas concentrations in addition to a pre and post zero check. The high calibration point should be at a level approximately 80% full scale of instrument range and the low calibration point should meet the requirements of 40 CFR Part 58 App A Sec 3.2.

In general, routine instrument calibrations should be conducted during the spring and fall months. This assures that instrument calibrations bracket the beginning and end of high ozone season.

5.1 Calibration at Altitude

Calibrating the instrument at altitude requires no special adjustments because it compensates for changes in temperature and pressure. Prior to calibration, verify the operation of the internal pressure transducers in the instrument by recording the values of temperature and pressure from the instrument and from a certified transfer standard for one point.

NOTE: The data acquisition system (DAS) is used for primary data recording, therefore the DAS data reading should be used for calibration calculations in lieu of the analyzer display readings.

5.2 AS-IS Calibration:

AS-IS instrument calibrations should be made prior to making any analyzer repairs or adjustments. The ozone scrubber and solenoid valve should not be replaced without first performing an AS-IS calibration. It is acceptable to perform

DRAFT

routine service checks prior to an AS-IS calibration. Prior to beginning AS-IS calibration, disable the appropriate DAS channels on the station data logger and record the instruments diagnostic parameters.

1. When setting up the certified ozone/gas transfer standard to generate the test concentrations for ozone, configure the transfer standard so that the ozone generated is measured by the transfer standards UV photometer. Using one-quarter inch (1/4" O.D.) Teflon tube, connect a zero air source and exhaust lines to the transfer standard. Connect a 1/4" O.D. Teflon line from the transfer standard's output port to the stations sample manifold.

   Energize the zero air system and configure the transfer standard so that zero air is flowing through the calibration assembly.

2. Allow both the transfer standard and the analyzer being calibrated to warm-up for at least one hour. All instrument covers should be on during the calibration, as the calibration is dependent upon the internal temperature of the analyzer. The transfer standard diagnostic values should be stable; showing no upward or downward trend when operating temperature has been reached.

3. Record the station information, analyzer identification numbers, analyzer settings, calibration equipment information and any other pertinent information on the calibration data sheet (Appendix B).

4. Obtain the instruments internal slope and offset from the instrument's display following the steps detailed in the instruction manual. Record the AS-IS slope and offset on the calibration data sheet. Confirm that the values are the same as at the end of the previous calibration. If not, investigate when and why these values have changed prior to beginning calibration.

5. Adjust the sample air flow rate of the transfer standard to approximately 5.0 SLPM as calculated from the transfer flow standard reading and the transfer flow standard certificate values. Measure and record the AS-IS sample air flow rate of the instrument. Connect an 18 inch long Teflon line (1/4" O.D.) to the vent port of the transfer standard and measure the vent flow. The vent flow should be greater than 0.5 LPM.

6. Allow the analyzer and transfer standard to sample zero air. When a stable zero reading is reached (0 ± 3 ppb) and the instrument stability test function (a measure of the standard deviation taken from the last three data points) is less than 1 ppb, record 3 consecutive DAS display values, recorded approximately one minute apart, with the respective columns labeled "pre-zero" on the calibration data sheet. Record the average strip chart and ozone

DRAFT

zero reading in the space provided.

7. Set the transfer standard to produce a Span ozone concentration of approximately 80% of full scale (320 ppb) of the analyzer being calibrated as read by the transfer standard.

8. When the stability test function is less than 1 ppb, record three consecutive DAS values approximately one minute apart in the columns labeled "1st pt" for each analyzer. Calculate the sum and average of the three numbers and record the value on the calibration data sheet in the appropriate blocks. Record the average strip chart recorder and instrument span readings in the appropriate space.

9. Record data for the data points after adjusting the ozone transfer standard output to approximately 320, 160, 70, and 50 ppb respectively and stability readings are less than 1 ppb. Calculate and record the sum and average readings.

10. Repeat step 6 and record the value on the column marked "post- zero". Average the "pre-zero" and "post-zero" readings and use this value as the zero correction.

11. Calculate corrected averages for the transfer standard analyzer using the formula:

    Corrected Average (Transfer Standard) = (Average Reading - Zero Correction) x True Ozone Correction Factor

12. Calculate the summation of corrected averages for the transfer standard (S1) by adding the corrected averages for points 1, 2, and 3.

13. Calculate the corrected averages of the instrument being calibrated using the formula:

    Corrected Average = Average Reading - Zero Correction

14. These values should correspond to the analyzer's DAS display. If not, check the calibration of the recording device before making adjustments to the analyzer.

15. Calculate the summation of corrected averages for the instrument being calibrated (S2) by adding the corrected averages for points 1, 2, and 3.

DRAFT

16. Calculate the average percent difference from true ozone:

$$Overall\%\,Accuracy = \left(\frac{S2 - S1}{S1}\right) * 100$$

If the Overall % Accuracy is more than ± 3% overall or 3 ppb for the low point (whichever is greater), **or** if the ozone scrubber is replaced, the analyzer must undergo a final calibration.

17. Using a best fit linear regression, calculate the slope (m) and intercept (b) equation of the calibration line:

Where x = true concentration
y = analyzer response

18. Calculate the percent change from the previous calibration:

Percent change from the previous calibration =
ABS[((New Slope - Old Slope)/(Old Slope))] x 100

19. Record the calibration data on the Calibration Report (See References).

5.3 Final Calibration:

Perform the final calibration as follows:

1. Challenge the instrument with zero air until the reading stabilizes (not more than +/-2 ppb over a 5 minute time period).

   NOTE: IF THE ANALYZER FAILS TO STABILIZE WHILE SAMPLING ZERO AIR, IT WILL BE IMPOSSIBLE TO ENTER ZERO AND IT WILL BE NECESSARY TO REFER TO THE TROUBLESHOOTING SECTION OF THE INSTRUCTION MANUAL.

2. Perform a zero alignment on the instrument by following the steps in the relevant instruction manual. For the API 400E, refer to Section 3.3.2 “Perform the Zero/Span Calibration Procedure”. For the API T400, refer to Section 3.7.2.3 “Initial Zero/Span Calibration Procedure”. The instrument should now be zeroed, but the blinking cal light indicates that data is not being sent out. This status will last for approximately 5 minutes.

3. Challenge the instrument with a span level of ozone. This level should be approximately 80% of full scale (400 ppb) as measured by the UV photometer. Allow the instrument to sample until a stable reading is achieved.

DRAFT

4. When the span level is stable, SPAN the instrument by performing the steps in the “Dynamic zero/span adjustment” section of the appropriate instruction manual.

5. Obtain the instrument internal slope and offset from the API front display following the steps in the instruction manual. Record the final slope and offset on the Calibration Data Sheet (See References).

6. Return to Section 5.2 of this document, step 6 to complete the remaining steps of the final calibration. If the analyzer cannot be properly calibrated, refer to the API Instruction Manual for assistance in troubleshooting and repairing the analyzer.

5.4 Internal Zero Span (IZS) Calibration:

The IZS calibration is used to adjust the internal ozone generator voltage to match its detector value. The voltages and corresponding ozone levels produced are stored in an on-board lookup table which is used for future ozone generation tasks. The 400E and T400 IZS instruments measure the IZS reference signal and ozone concentration at five different lamp voltages. During the calibration process the screen will display the percent completed, taking approximately 50 minutes to complete.

AQSB standard configuration indicates that the low span should be set for 70 ppb and the high span should be set for 400 ppb. Refer to the API 400E manual, section 7.4 “Manual Zero / Span (IZS) Calibration With Zero/Span Valve Option Installed” to set the IZS calibration parameters. Analogous documentation exists in the APIT400 instruction manual, section 3.8.4 “Initial Calibration And Conditioning of T400 Analyzers with the IZS Option Installed”. Also, ensure that analyzers utilizing the IZS feedback option have their feedback mode set to *Ref*. If the IZS ozone concentration displays some fixed value higher or lower than 70 and 400, you may adjust these settings until the resulting display matches the targeted value.

At a minimum the O3 Gen Cal should be performed following a change or rebuild of the sample pump, adjustment of the flow rate, replacement of the ozone lamp, or after conducting a final calibration.

1. From the front panel of the instrument, choose *setup*, *more*, followed by *diag*.
2. Ensure that the password reads *818,* and choose *enter*.
3. Choose the *next* entry until obtaining the *ozone generator calibrator* menu item.

DRAFT

4. Choose enter and wait for approximately fifty minutes. After completion, choose *exit* several times until arriving back at the main menu.

Immediately following the O3 Gen Cal calibration, record the average of the next three auto IZS calibration sequences to determine the new baseline for zero, precision, and span values. These will become the new source values for use in the data system.

5.5 Automatic Zero/Span Check:

Both instruments with the IZS option are capable of conducting automatic calibrations on regular intervals. After conducting IZS calibration, daily calibration checks should be scheduled. Detailed procedures can be found in the API 400E Instruction Manual, section 7.6 “Automatic Zero/Span Check with Zero/Span Valve Options Installed”. Analogous procedures can be found in the API T400 Instruction Manual, section 9.4 “Automatic Zero/Span Cal/Check (Autocal)”.

Note: No adjustment to the instrument should be made based upon the results of the IZS calibration checks.

AQSB standard configuration uses the parameters detailed in the following table:

Parameter	Value
Mode	Zero-Lo-Hi
Starting Date	The day following the IZS calibration.
Starting Time	0400 Hours
Delta Days	1
Delta Time	0
Duration	20
Calibrate	No

Table 2 Instrument IZS configuration parameters

DRAFT

6.0 ROUTINE SERVICE CHECKS

6.1 General Information:

The following routine service checks are to be performed in accordance with the maintenance schedule (Table 3). Perform the routine service checks at least at the prescribed intervals or more often in necessary. The AQSB Monthly Quality Control Check Sheet (See References) should be filled in weekly and submitted monthly to the station operator's supervisor. The station operator must keep a copy of the Monthly Quality Control Check Sheet in the air monitoring station. Detailed routine maintenance procedures can be found in Chapter 11 of the instruction manual.

	Value	Daily*	Weekly	Monthly	Semi-Annual	As Req
Power On	On	X				
Error Flags	None	X				
Check Chart Recorder	None	X				
Record Test Parameters	Record		X			
Change Inlet filter	Clean		X			
Fill out the AQSB QC Form	None		X			
Complete and Submit the AQSB QC Form	None			X		
Perform field calibration	6 months				X	
Adjust photo lamp	< 2500 mV					X
IZS Calibration	None					X

Table 3 Maintenance Schedule
*** Daily indicates that for each working day where the site technician visits the station, this check should be performed.**

6.2 Daily (or Each Visit) Checks:

Review instrument data and check chart recorders for any indication of analyzer malfunction on each working day that the site is visited. Check instrument front panel for any error messages.

6.3 Weekly Checks:

Record test parameters on the AQSB QC Form 002 (API 400E/T400) check sheet. Change the particulate filter located inside the instrument.

DRAFT

6.4 Monthly Checks:

Complete and submit the AQSB QC Form 002 (API 400E/T400) check sheet to your immediate supervisor along with station data.

6.5 As Required Checks:

Clean optical chamber and adjust photo lamp when O3 reference value is less than 2500 mV. In the event that this needs to be done, the instrument will require recalibration. Complete an IZS calibration upon completion of instrument calibrations, flow adjustments, or lamp replacements.

6.6 Semiannual Checks:

Perform instrument calibration.

DRAFT

7.0 MAINTENANCE AND PROCEDURES

7.1 General Information:

The instrument is designed to operate unattended for long periods of time and, other than the routine checks required in section 6.0 of this SOP, require little maintenance. However, maintenance requirements may vary from instrument to instrument, thus operators should refer to the instrument operating manual to become familiar with maintenance requirements.

If station operators cannot repair an instrument using procedures stated in the instruction manual, contact the Operations Support Sections Instrument Laboratory.

DRAFT

8.0 TROUBLESHOOTING

8.1 General Information:

The API 400E and API T400 have been designed to rapidly detect possible problems and allow for their quick evaluation and repair. During operation, the analyzer continuously performs self-test diagnostics and provides the ability to monitor the key operating parameters of the instrument without disturbing monitoring operations. If being run with CARBLogger, any diagnostic parameters which drift outside of the acceptable range will cause and alert to be emailed to the site operator.

Should instrument malfunctions occur and troubleshooting is required to determine the problem, operators should refer to Chapter 11, "Troubleshooting and Repair Procedures" in the API instruction manual.

REFERENCES

- AQSB QC Form 002 (API 400E/T400) Check Sheet http://arb.ca.gov/airwebmanual/amwmn.php?c=0
- Advanced Pollution Instrumentation, Inc (API) Model 400E/T400 Calibration Form http://arb.ca.gov/airwebmanual/aqsbdocs1/AQSB%20Cal%20Form%20002%20O3%20FINAL.xls

DRAFT