State of California
AIR RESOURCES BOARD

RESOLUTIONS

No.	Item	Staff	Hearing Scheduled	Date Adopted	+ EIS to Resources
80-1	Research $99,973 (Visibility Model) Technology Service Corporation	Jack Suder	1/31/80	1/31/80	N/A
80-2	Research $40,000 (co-fund) Laurence Berkeley Laboratory	Malcolm Dole	1/31/80	1/30/80	N/A
80-3	Health/Agri. Burning Research $19,183 (Augmentation) Univ. of Calif. Davis	Dane Wesder-dahl	1/31/80	1/31/80	N/A
80-4	Kern County-NOx control for Steam Generators, & NPx tradeoffs ~~Rule 210.1 & Rule 425~~ (confirm emergency adoption)	DiGenova	3/5/80	3/5/80	4/30/80
80-5	Ass. Test ~~Procedures & Exhaust Emissions~~ standards 1980-81, passenger cars	George Koe	3/5/80	3/5/80	3/24/80
80-6	Ass. Test Procedures & Exhaust Emissions Standards 1981-82, light-duty & medium ~~duty vehicles (AMC trucks)~~	George Koe	3/26/80	3/26/80	5/8/80
80-7	Exhaust & Evaporative Emissions Std. & Text Procudures for 1981 Passenger Cars ~~LTD trucks & Med. Duty Vehicles (Gasohol)~~			deferred (workshops)	
80-8	~~Evaporative Emissions Regs (1981)~~	Mike Bogdanoff	4/23/80	4/23/80	5/8/80
80-9	MVIP SIP Revision; Long Range Plan for presently-unregulated sources	MSCD Paul Rieger Sommer-field			4/28/80
80-10	Anti-tampering regs for heavy duty engines- 1982 mode	Henry Mano MSCD	4/23/80	4/23/80	5/8/80
80-11	SCAQMD NSR-relation to difinition of Coastal Waters and off-shore emissions (support statement)	Matthews Nawi	3/5/80	3/6/80	N/A
80-12	Research $95,987 (Unv. of SF AP on airway function	Holmes	3/26/80	3/26/80	N/A
80-13	Research $82,398 Dept. of Health Services (size slective samplers)	Holmes	3/26/80	3/26/80	N/A
80-14	Research $99,642 AeroSpace(NOx control)	Holmes	3/26/80	3/26/80	N/A
80-15	Research $157,521 UCLA(birth outcome)	Holmes	3/26/80 deferred to 4/23/80	4/23/80	N/A
80-16	Research $98,488 UC Riverside (auto exhaust measurements)	Holmes	#/26/80	3/26/80	

RESOLUTIONS

No.	Item	Staff	Hearing Scheduled	Date Adopted	+ EIS Resources
80-17	Research $150,000 (Fine Particle Emissions_)	Holmes	3/26/80	3/26/80	N/A
80-18	Research $74,945 Science Application (fiberglass emission)	Holmes	3/26/80	3/26/80	N/A
80-19	Research $99,848 Acurex (Emissions from ships)				
80-20	Research $299,945 MRI/CIT (Sacramento Valley Study)	Holmes	3/26/80	3/26/80	N/A
80-21	Subvention Program	(Mills) RRD	3/27/80	3/26/80	4/3/80
80-22	SCAQMD Rule 475.1 (becomes 1135.1) relating to NOx Emissions from power plants)	SSCD	3/27/80	3/27/80	4/14/80
80-23	Ventura Rule 59.1 (relation to NOx Emissions form power plalnat)	SSCD	3/27/80	3/27/80	4/14/80
80-24	Title 13, heavy duty engine emission standards through 1983 model year	MSCD Sommer= field	5/22/80	5/22/80	6/6/80
80-25	To support and assist local APCD"s in Planning Process	RPD Sue Scott	4/24/80	4/24/80	5/8/80
80-26	Motorcycle Evaporative Emissions Stad.	CROSS MSCD	6/26/80	6/26/80	7/1/80
80-27	Nozzel sampling procedures for Reid Vapor Pressure (RVP)	Enforce Morgester	6/25/80	6/26/80	30/80
80-28	Research $199,974, Science Application for 1 year (carcinogen study, Phase 11)	Research	4/23/80	4/23/80	N/A
80-29	Research $98,444 D.L. Labs (Evaluation of industrial coations)	Research	4/23/80	4/23/80	N/A
80-30	Research $123,873 Engineers Testing Labs. (Asphalt study)	Research	4/23/80	4/23/80	N/A
80-31	Research $199,969 SRI, (Oxidant in the North Central Coast)	Research	4/23/80	4/23/80	N/A

RESOLUTIONS

No.	Item	Staff	Hearing Scheduled	Date Adopted	+ EIS to Resources
80-32	Research, $74,754 SAI, (oxidant in the North Central Coast)	Research	4/23/80	$/23/80	N/A
80-33	Research ($82,589) UCD (oxidant v.s. the immune system)	Research	4/2380	4/23/80	N/A
80-34	Research ($105,472) UC Riverside (Second year study of important S. Joaquin Valley Crops	Research	4/23/80	4/23/80	N/A
80-35	Research $149,093 UCSB (responses to oxidants	Research	4/23/80	4/23/80	N/A
80-36	Research $126,746 UCD, (effects of SO2 & 03 on crops)	Research	4/23/80	4/23/80	N/A
80-37	Appointment of Glen R. Cass to Research Screening committee	Research	4/24/80	4/24/80	N/A
80-38	So. EastDesert Air Gasin Rules, Imperial LA & San Ber. Co., on vapor recovery degreasing, architectural coatings & NSR	SSCD Shirowa	6/25/80	7/23/80	8/12/80
80-39	Internal Combustion Engines	SSCD Reese	5/21/80	5/22/80	6/6/80

Continued in Val.11

State of California
AIR RESOURCES BOARD

-1987-

RESOLUTIONS

No.	Item	Staff	Hearing Scheduled	Date Adopted	+ E... Res ...rces
80-40	Motorcycle Exhaust Emiss.Sta. for 1982 & subsequent model year. (record held open, to be heard again 7/23/80)	MSCD Sommer-field	6/26/80	7/23/80	10/20/80
80-41	Research UCD $115,986 In vivo fate	Research	6/25/80	6/25/80	N/A
80-42	Research $120,921 UCSD- Respirable Particulates	Research	6/25/80	6/25/80	N/A
80-43	Research $99,951 Cal Tech. Math. Model	Research	6/25/80	6/25/80	N/A
80-44	(Continued to 9/24/80) Changes in Warranty Regs	MSCD Urkow	8/27/80	9/25/80	11/3/80
80-45	Title 17 Amendments - ARB regs	Legal	6/25/80	6/25/80	7/1/80
80-46	Petn. of RTD FROM EXEMPT. FROM Calif. MV Emiss. statutes and Reg (Will be renoticed)	Stu. Dan MSCD	8/27/80		
80-47	Suggested Control Measure to Control organic emissions form pharmaceutical and cosmetics mfg operations	SSCD Barham	8/28/80	8/28/80	10/16/80
80-48	Graphic arts	SSCD Lamm	7/24/80	7/24/80	9/19/80
80-49	SCAQMD NSR	shiroma	7/23/80	7/23/80	8/12/80
80-50	Research $137,946 Univ. Cal. Riverside; natural hydrocarbons & photochemical smog	Research	8/27/80	8/28/80	N/A
80-51	Research $ 125.000 Univ. Cal. Riverside; forage grasses	Research	8/27/80	8/28/80	N/A
80-52	Research $12,645 (augmentation) SAI(joint funding w/energy Comm.) Cooling Towers	Research	8/27/80	8/28/80	N/A
80-53	Emergency Hearing Diesel Nox Emission Standard	heinan	8/27/80	8/28/80	EIS N/A Emerg 10/6/80
80-54	Emergency Hearing AMC-Exhaust Emissions '82-86 Model year	Sosnowitz	8/27/80	8/27/80	10/6/80
80-55	Repeal fo 1955-65 MV Exhaust Retrofit Emission contol Requirements	Sommer-field	10/22/80	10/22/80	11/3/80

RESOLUTIONS

No.	Item	Staff	Hearing Scheduled	Date Adopted	+ EIS Resources
80-56	Emergency Hearing Diesel Particulate Emission Standard	Heinen MSCD	8/27/80	8/28/80	EIS N/A emerg. 10/6/80
80-57	PCB/s (Policy for disposal fo)	Leonard	9/25/80	will be renoticed con. indef.	
80-58	Confirmantion of Emergency Hearinbg AMC -Exhaust Emiss. 1982-86 (reference resolution 80-54)	Susnowitz MSCD	12/2/80	12/2/80	12/30/80
80-59	" " " " (Res. 80-53)	Heinen MSCD	12/2/80	12/2/80	12/30/80
80-60	" " " " (Res.80-56)	" "	" "	" "	" "
80-61	1982 assemblyling Test Procedures	Weis	12/2/80	delegated to EO for 12/17/80	
80-62	Petition to review SCAQMD RULE 1005.1 Control of Vinyl Chloride Emissions	Nawi	10/22/80	10/22/80	N/A
80-63	suggested Control Measure for Perchloroethylene Dry Cleaning	Loscutoff SSCD	Cont. to10/22 9/25/80	10/22/80	11/17/80
80-64	Research, $94,000. Battelle Pacific Northwest Alter. to Open Burning	Research	11/5/80	11/21/80	N/A
80-65	Research $75,000. KVB, Primary Oil Production Operations	research	11/5/80	11/21/80	N/A
80-66	Research, $125,602 Pro. Staff Assn. Corelative & Sensitive Discriminates	Research	11/5/80	11/21/80	N/A
80-67	Suggested Control Measure, Glass Melting Furnances	Ames SSCD	10/23/80	11/5/80	11/17/80
80-68	SCAQMD Rule 1135.1 (Nox emission from power plants)	SSCD	12/18/80	12/18/80	12/23/80
80-69	Ventura Rule 59.1 (Nox emission from power plants)	" "	" "	" "	" "

State of California
AIR RESOURCES BOARD
Resolution 80-1

January 31, 1980

WHEREAS, the ARB has been directed to carry out an effective research program in conjunction with its efforts to combat air pollution, pursuant to Health and Safety Code Sections 39700 through 39705; and

WHEREAS, a solicited research Proposal Number 877-74 has been submitted by the Technology Service Corporation to the Air Resources Board; and

WHEREAS, the Research staff has reviewed and recommended this proposal for approval; and

WHEREAS, the Research Screening Committee has reviewed and recommends for funding:

> Proposal Number 877-74 entitled Air Quality Models to Relate Particulate and Gaseous Pollutants to Visibility submitted by the Technology Service Corporation for an amount not to exceed $99,973;

NOW, THEREFORE, BE IT RESOLVED, that the Air Resources Board pursuant to the authority granted by Health and Safety Code Section 39703, hereby accepts the recommendation of the Research Screening Committee and approves the following:

> Proposal Number 877-74 entitled Air Quality Models to Relate Particulate and Gaseous Pollutants to Visibility submitted by the Technology Service Corporation, for an amount not to exceed $99,973,

BE IT FURTHER RESOLVED, that the Executive Officer shall initiate administrative procedures and execute all necessary documents and contracts for the research effort proposed in an amount not to exceed $99,973.

I certify that the above is a true and correct copy of Resolution 80-1 as passed by the Air Resources Board.

Sally Rump

Sally Rump
Board Secretary

State of California
AIR RESOURCES BOARD
Resolution 80-2

January 31, 1980

WHEREAS, the Air Resources Board has been directed to carry out an effective research program in conjunction with its efforts to combat air pollution, pursuant to Health and Safety Code Sections 39700 through 39705; and

WHEREAS, an unsolicited research Proposal Number 874-74 entitled "California Energy Systems Assessment Model: Economic Impacts and Air Effluents of Conventional and Solar Strategies" has been submitted by the Lawrence Berkeley Laboratory to the Air Resources Board and California Energy Commission;

WHEREAS, the total cost of this proposal is $115,200, with $75,000 proposed to be contributed by the California Energy Commission and $40,200 proposed to be contributed by the Air Resources Board; and

WHEREAS, the California Energy Commission will consider this proposal for co-funding on February 27, 1980;

WHEREAS, the Research staff has reviewed and recommended this proposal for approval; and

WHEREAS, the Research Screening Committee has reviewed and recommends for funding:

> Proposal Number 874-74 entitled "California Energy Systems Assessment Model: Economic Impacts and Air Effluents of Conventional and Solar Strategies" submitted by the Lawrence Berkeley Laboratory for an amount not to exceed $115,200, of which no more than $40,200 shall be funded by the ARB;

NOW, THEREFORE, BE IT RESOLVED, that the Air Resources Board pursuant to the authority granted by Health and Safety Code Section 39703, hereby accepts the recommendation of the Research Screening Committee and approves the following:

> Proposal Number 874-74 entitled "California Energy Systems Assessment Model: Economic Impacts and Air Effluents of Conventional and Solar Strategies" submitted by the Lawrence Berkeley Laboratory, for an amount not to exceed $115,200, of which no more than $40,200 shall be funded by the ARB,

BE IT FURTHER RESOLVED, that the Executive Officer shall initiate administrative procedures and execute all necessary documents and contracts for the research effort proposed in an amount not to exceed $115,200, of which no more than $40,200 shall be funded by the ARB.

State of California
AIR RESOURCES BOARD
Resolution 80-3

January 31, 1980

WHEREAS, the Air Resources Board has been directed to carry out an effective research program in conjunction with its efforts to combat air pollution, pursuant to Health and Safety Code Sections 39700 through 39705; and

WHEREAS, a research Proposal Number 805-67(a) to augment the existing Contract Number A8-093-31 entitled "Potential Health Hazards Associated with Particulate Matter Released from Rice Straw Burning" has been submitted by the University of California at Davis to the Air Resources Board; and

WHEREAS, the Research staff has reviewed and recommended this proposal for approval; and

WHEREAS, the Research Screening Committee has reviewed and recommends for funding:

> Proposal Number 805-67(a) to augment existing Contract Number A8-093-31 entitled "Potential Health Hazards Associated with Particulate Matter Released from Rice Straw Burning" submitted by the University of California at Davis for an amount not to exceed $19,183;

NOW, THEREFORE, BE IT RESOLVED, that the Air Resources Board pursuant to the authority granted by Health and Safety Code Section 39703, hereby accepts the recommendation of the Research Screening Committee and approves the following:

> Proposal Number 805-67(a) to augment existing Contract Number A8-093-31 entitled "Potential Health Hazards Associated with Particulate Matter Released from Rice Straw Burning" submitted by the University of California at Davis, for an amount not to exceed $19,183,

BE IT FURTHER RESOLVED, that the Executive Officer shall initiate administrative procedures and execute all necessary documents and contracts for the research effort proposed in an amount not to exceed $19,183.

I certify that the above is a true and correct copy of Resolution 80-3 as passed by the Air Resources Board.

Sally Rump
Board Secretary

State of California
AIR RESOURCES BOARD

Errata to Resolution 80-4

1. The second paragraph of page 4 of the Resolution is amended to read as follows:

> "That for new or modified sources reviewed pursuant to Rule 210.1 as amended by this Resolution, revising the accumulation date in Rule 210.1 for net changes in NOx emissions will tend to increase ambient levels of NO_2, ozone (oxidant) and total suspended particulates as a result of NOx emissions from steam generators which ~~receive~~ received Authority to Construct ~~after~~ before September 12, 1979 but after December 28, 1976;"

2. Subsection (A)(6) on page A-3 of Attachment A is amended to read as follows:

> "The date of an air quality change ... the most recent ~~discontinuance~~ discontinuous hourly exceedance."

3. Section 6 of Attachment B, found on page B-4, should read as follows:

> "6. Sections 5 B 9, 5 B 10, and 5 B 11 are renumbered to 5 B 10, 5 B 11, and 5 B 12, respectively."

State of California
AIR RESOURCES BOARD

Resolution 80-4

March 6, 1980

WHEREAS, Health and Safety Code Section 39602 designates the state board as the air pollution control agency for all purposes set forth in federal law and as the state agency responsible for preparation of the state implementation plan required by the Clean Air Act (42 U.S.C., Section 7401 et seq.) and provides that the state board shall coordinate the activities of all districts to comply with that Act; and

WHEREAS, Health and Safety Code Section 39602 further provides that the state implementation plan shall only include those provisions necessary to meet the requirements of the Clean Air Act; and

WHEREAS, Health and Safety Code Section 39605 authorizes the state board to provide any assistance to a district, and the Kern County Air Pollution Control Board has requested that the state board adopt for the District rules to control emissions of oxides of nitrogen (NOx); and

WHEREAS, Health and Safety Code Section 40001 provides that subject to the powers and duties of the state board, local districts shall adopt and enforce rules and regulations which assure that reasonable provision is made to achieve and maintain state ambient air quality standards and that districts shall also endeavor to achieve and maintain federal ambient air quality standards; and

WHEREAS, Section 110(a)(1) of the Clean Air Act requires each state to adopt and submit to the Administrator of the Environmental Protection Agency, within a specified time, a plan which provides for the implementation, maintenance, and enforcement of national primary ambient air quality standards in each air quality control region of the state; and

WHEREAS, Section 110(a)(2)(B) of the Clean Air Act requires that a state implementation plan contain provisions and measures necessary to insure the attainment and maintenance of national air quality standards; and

WHEREAS, Section 110(a)(2)(D) of the Clean Air Act requires that a state implementation plan include a permit program which assures that national ambient air quality standards are achieved and maintained; and

WHEREAS, Sections 21080.5 and 21081 of the Public Resources Code (California Environmental Quality Act, "CEQA") and Board regulations require that an activity not be adopted as proposed if there are feasible alternatives or feasible mitigation measures available which would substantially lessen any significant adverse impact which the action may have on the environment; and

WHEREAS, Kern County has been designated under Section 107(d)(1) of the Clean Air Act as "attainment" or "unclassified" for nitrogen dioxide (NO_2) and as "nonattainment" for ozone and total suspended particulates, and exceeds the state visibility standard and the state standards for oxidant, sulfate, and total suspended particulates; and

WHEREAS, the state board on September 12, 1979, adopted Resolution 79-68, which among other things amended Rule 210.1 of the Kern County Air Pollution Control District, Standard for Authority to Construct; and

WHEREAS, the Board hereby incorporates Resolution 79-68 in this Resolution; and

WHEREAS, Resolution 79-68 contains, among others, the following findings:

> The air quality monitoring data for Bakersfield indicate consistent yearly increases in ambient concentrations of NO_2 approaching the national ambient air quality standards (NAAQS) for that pollutant, and further indicate that if current trends continue the standard will likely be exceeded in the near future; and
>
> The exceedance of the NO_2 NAAQS would necessitate redesignation of Kern County as nonattainment for that pollutant and would further necessitate preparation of a revision to the state implementation plan in accordance with the Clean Air Act; and
>
> The analysis of current air quality data indicates that increased emissions of oxides of nitrogen (NOx) in Kern County will lead to aggravation of existing exceedances of the federal ozone standard and the state oxidant standards; and

WHEREAS, in response to requests from interested parties that the Board reconsider Rule 210.1, particularly as it affects control of emissions of NOx from steam generators used in oil production, the Board held a hearing on November 28, 1979, to consider, among other things, review and amendment of certain provisions of Rule 210.1; and

WHEREAS, at its November 28, 1979 hearing, a committee of the Board was designated to prepare a report and recommendation to the Board concerning Rule 210.1 and an overall control strategy for the control of NOx emissions in Kern County; and

WHEREAS, the Board Committee have prepared their report and recommendation, and Board staff have also prepared a report and recommended proposal for control of NOx emissions in Kern County; and

WHEREAS, Board Member Laurence Caretto, pursuant to Board direction, has worked closely with the Kern County Air Pollution Control District and industry representatives and this has been regarded by the District and industry as a useful relationship; and

WHEREAS, the operation of steam generators provides great opportunity for cogeneration which could result in a useful saving of the nation's energy resources; and

WHEREAS, the District has committed to modifying their New Source Review rule to encourage cogeneration projects; and

WHEREAS, the Board has held a public hearing and considered the reports and recommendations prepared by both the Board Committee and Board staff as well as oral and written testimony from interested persons; and

WHEREAS, the Board finds:

That ambient levels of NO_2 in Kern County have generally increased since at least 1973, and are closely approaching the state and national standards;

That NOx emissions from steam generators used in thermally enhanced oil recovery operations in Kern County contribute significantly to ambient NO_2 levels;

That steam generators which will commence operation in the future and which are necessary for the extraction of the large reserves of heavy crude oil located in Kern County to meet national energy needs will necessarily increase NOx emissions;

That unless such increases in NOx emissions are mitigated, state and national ambient NO_2 standards will likely be exceeded in Kern County in the near future;

That under Rule 210.1 as adopted September 12, 1979, accumulated emissions from December 28, 1976 from steam generators which had not received preliminary approval for Authority to Construct by that date are required to be fully offset;

That oil producers have raised substantial concerns regarding their ability to obtain NOx offsets for new oil field steam generators in the manner required under the existing rule;

That in order to meet these concerns it is necessary to change the accumulation date in Rule 210.1 for net changes in emissions from December 28, 1976 to September 12, 1979, and provide an alternative method for mitigation of emissions increases associated with such a change;

That certain oil producers who own existing sources have indicated a willingness to make emission offsets available to other producers who have no offsets of their own;

That emission mitigation requirements contained in existing regulations of the Kern County Air Pollution Control District together with amendments to District rules adopted in this Resolution are adequate to insure that no increases in ambient levels of ozone (oxidant), total

suspended particulates, and sulfur dioxide will result from the change in the emissions accumulation date in Rule 210.1 adopted by this Resolution and the concommitant increase in emissions of hydrocarbon and sulfur dioxide (SO_2) and directly emitted particulates;

That revising the accumulation date in Rule 210.1 for net changes in NOx emissions will tend to increase ambient levels of NO_2, ozone (oxidant) and total suspended particulates as a result of NOx emissions from steam generators which receive Authority to Construct after September 12, 1979;

That in order to mitigate the effect of these NOx emissions increases on ambient concentrations of NO_2, ozone (oxidant) and total suspended particulates, it is necessary under Sections 110 and 172 of the Clean Air Act and under CEQA to require reductions of NOx emissions from steam generators permitted before September 12, 1979;

That requiring an increased level of NOx control on Kern County oil field steam generators which received an Authority to Construct on or before September 12, 1979, together with the requirements of Rule 210.1, will result in a reduction of NOx emissions sufficient to permit the construction and operation of new steam generators without adversely affecting air quality;

That the reductions in NOx emissions required under Rule 425 are sufficiently greater than the increases in NOx emissions allowed by altering Rule 210.1 so that the attainment and maintenance of state and national ambient air quality standards for ozone (oxidant), total suspended particulates, and NO_2 will be assured;

That the NOx emissions reductions from oil field steam generators required by the proposed Rule 425 are technically feasible and economically reasonable and can be accomplished by the dates required by the rule;

That under some circumstances, the revisions to the Kern County Air Pollution Control District's Rules and Regulations adopted in this Resolution may result in temporary increases in NOx emissions, thereby increasing ambient concentrations of NO_2, ozone (oxidant), and particulates;

That the air quality monitoring and associated retrofit provisions of Rule 425 will insure that any such increases in ambient NO_2, ozone (oxidant), or total suspended particulate concentrations will, in fact, be short term and will be fully mitigated within eighteen months of such increase;

NOW THEREFORE BE IT RESOLVED, that the Air Resources Board hereby adopts Rule 425 (Oxides of Nitrogen Emissions from Steam Generators Used in Thermally Enhanced Oil Recovery) for the Kern County Air Pollution Control District to read in its entirety as set forth in Attachment A to this Resolution;

BE IT FURTHER RESOLVED, that the Rules and Regulations of the Kern County Air Pollution Control District, Rule 210.1, Standard for Authority to Construct, is amended to read as set forth in Attachment B to this Resolution;

BE IT FURTHER RESOLVED, that the revisions to Rule 210.1 and the provisions of Rule 425 are integral and non-severable, and in the event that any portion of either Rule 210.1 or Rule 425 is found to be invalid either administratively or in a court of law, it is the Board's intention that the provisions of both Rule 210.1 and Rule 425 as adopted by this Resolution be rescinded and the provisions of Rule 210.1 as adopted September 12, 1979 be reinstated;

BE IT FURTHER RESOLVED, that the aforesaid amendments shall be effective immediately and shall be enforced by the Kern County Air Pollution Control District in accordance with Section 41504 of the Health and Safety Code;

BE IT FURTHER RESOLVED, that the Board directs the Executive Officer forthwith to submit Rules 210.1 and 425 as adopted in this Resolution to the Environmental Protection Agency for incorporation in the California State Implementation Plan;

BE IT FURTHER RESOLVED, that the Board encourages the District to expedite the adoption of appropriate provisions in its New Source Review rule which will further the use of cogeneration;

BE IT FURTHER RESOLVED, that the Board acknowledges the problem faced by those oil producers lacking existing sources from which to obtain emission reductions to use as tradeoffs or for banking and suggests that in developing a system of banking regulations, the APCD seek to develop a solution to these problems;

BE IT FURTHER RESOLVED, that the District is encouraged to include in a system of banking regulations a provision to insure that the use of banked reductions will not interfere with the attainment and maintenance of state and national ambient air quality standards;

BE IT FURTHER RESOLVED, that the Board commits to the continuation of an active working relationship between Member Caretto and the District and affected industries.

I certify that the above is a true and correct copy of Resolution 80-4 as passed by the Air Resources Board.

Sally Rump
Board Secretary

ATTACHMENT A

Rule 425
Oxides of Nitrogen Emissions from Steam Generators used in Thermally Enhanced Oil Recovery

A. Definitions

For the purposes of this rule:

1. "Steam generator" means an oil-fuel-fired combustion device which has a heat input capacity greater than fifteen million British thermal units (Btu's) per hour and which converts water to dry steam, or to a mixture of water vapor and steam, with an absolute pressure of more than thirty pounds per square inch, and which is used in thermally enhanced oil recovery.
2. "Existing steam generator" means a steam generator for which an Authority to Construct was issued prior to September 12, 1979.
3. "Stationary source" means a stationary source as defined in Rule 210.1.
4. "NO_2 concentration" means the concentration of gaseous nitrogen dioxide recorded by an ARB or EPA approved analyzer which is calibrated against one of the two alternative EPA calibration methods. NO_2 concentrations recorded from instruments calibrated by the Saltzman procedure shall be multiplied by 0.87 prior to the use of such NO_2 concentrations in the determination of an air quality change.
5. "Moving average concentration" means the average of all representative

monthly average concentrations for any 12 consecutive month period at a monitoring site. Data used to construct a moving average concentration shall meet the following requirements:

a) At least two representative monthly averages are required for each calendar quarter;

b) At least nine representative monthly averages are required for each 12 month moving average;

c) At least 548 hourly averages during a calendar month are required to calculate a representative monthly average

If a monthly average is not representative or is otherwise unavailable the 12 month moving average shall be calculated by substituting the corresponding representative monthly average for the most recent year, or if this information is unavailable, the 12 month moving average shall be calculated by substituting the representative monthly average for the month nearest in time to the month in question.

6. "Air quality change" means a second or third stage air quality change as defined in the following table:

monthly average concentrations for any 12 consecutive month period at a monitoring site. Data used to construct a moving average concentration shall meet the following requirements:

a) At least two representative monthly averages are required for each calendar quarter;

b) At least nine representative monthly averages are required for each 12 month moving average;

c) At least 548 hourly averages during a calendar month are required to calculate a representative monthly average

If a monthly average is not representative or is otherwise unavailable the 12 month moving average shall be calculated by substituting the corresponding representative monthly average for the most recent year, or if this information is unavailable, the 12 month moving average shall be calculated by substituting the representative monthly average for the month nearest in time to the month in question.

6. "Air quality change" means a second or third stage air quality change as defined in the following table:

Second Stage Air Quality Change	Third Stage Air Quality Change
The occurrence of a 12 month moving average NO_2 concentration which exceeds 0.045 parts per million or the occurrence of an hourly average NO_2 concentration which exceeds 0.20 parts per million for three or more discontinuous station-hours, separated by at least 18 hours, within any consecutive 36 month period.	The occurrence of a 12 month moving average NO_2 concentration which exceeds 0.053 parts per million or the occurrence of an hourly average NO_2 concentration which equals or exceeds 0.25 parts per million for two or more discontinuous station-hours within any consecutive 12 month period.

The date of an air quality change shall be the last date of the applicable 12 month moving average or the date of the most recent discontinuance hourly exceedance.

7. "Small producer" means a person, including any business entity, which, on March 6, 1980, had petroleum business interests solely in drilling and producing crude oil and gas.

8. "Approved air quality monitoring station" means an air monitoring station which meets applicable state and federal criteria for quality assurance and which is approved in writing by the Kern County Air Pollution Control District for use in determining whether an air quality change has occurred. At a minimum, all air monitoring stations operated by the District, the Air Resources Board, or by any person pursuant to any federal, state or district law, rule, order, permit or regulation, shall be approved by the district.

B. NOx Emission Standards

1. After July 1, 1982, the owner or operator of an existing steam generator shall limit the emissions of oxides of nitrogen (NOx) from such units to:

   a) For small producers, no more than 0.35 pounds of oxides of nitrogen per million Btu of heat input.

   b) For producers other than small producers, no more than 0.30 pounds of oxides of nitrogen per million Btu of heat input.

2. 18 months after a second stage air quality change, the NOx emissions standard which is prescribed in subsection (B)(1) shall be superseded by the following emission standard: the owner or operator of an existing steam generator shall limit the emissions of oxides of nitrogen from such unit to no more than 0.25 pounds per million Btu of heat input.

3. 18 months after a third stage air quality change, the NOx emission standard which is prescribed in subsection (B)(1) or (B)(2), whichever applies, shall be superseded by the following emission standard: the owner or operator of an existing steam generator shall limit the emissions of oxides of nitrogen from such unit to no more than 0.14 pounds per million Btu of heat input.

C. Banking of Emission Reductions

1. Oxides of nitrogen emission reductions which are required pursuant to subsection (B)(1), but which are not required by any other federal, state, or district law, rule, order permit or regulation, may be used as offsets or banked for use in future projects, provided that prior to a second or third stage air quality change, the applicant has completed the installation of all necessary control equipment and has notified the air pollution control officer in writing of the start-up of such equipment and requested the District to perform the source test(s) required for issuance of a permit to operate, and that subsequently a permit to operate for such source is issued.

2. Oxides of nitrogen emission reductions which are required pursuant to Subsection (B)(2), but which are not required by any other federal, state, or district law, rule, order, permit, or regulation may be used as offsets or banked for use in future projects, provided that prior to a second or third stage air quality change, the applicant has completed the installation of all necessary control equipment and has notified the air pollution control district in writing of the start-up of such equipment and requested the district to perform the source test(s) required for issuance of a permit to operate, and that subsequently a permit to operate for such source is issued.
3. Oxides of nitrogen emission reductions which are required pursuant to Subsection (B)(3), but which are not required by any other federal, state, or district law, rule, order, permit, or regulation may be used as offsets or banked for use in future projects, provided that prior to a third stage air quality change, the applicant has completed the installation of all necessary control equipment and has notified the air pollution control district in writing of the start-up of such equipment and requested the district to perform the source test(s) required for issuance of a permit to operate, and that subsequently a permit to operate for such source is issued.
4. The use of emissions reductions as offsets or in a banking system pursuant to this Section C shall be contingent upon verification of those reductions in a permit to operate issued for the modified equipment.

D. Records for NO_2 Concentrations

No later than 90 days after the last day of each calendar month, the Air Pollution Control Officer shall publish a complete update of the moving average NO_2 concentrations and maximum hourly average NO_2 concentrations for each approved air quality monitoring station.

E. Averaging

The owner or operator of two or more steam generators may satisfy the requirements of Section (B) by demonstrating to the satisfaction of the Air Pollution Control Officer that the average emissions of oxides of nitrogen from all of his or her existing steam generators which are located within the same stationary source shall not exceed the emission standards prescribed in Section (B). Twelve months prior to any compliance date specified in this rule, the owner or operator shall provide plans to the District showing how compliance will be achieved.

F. Small Producer Exemption

Section (B)(2) and (B)(3) of this rule shall not apply to small producer's existing steam generators up to a total heat input of 200 mm Btu/hour.

ATTACHMENT B

Amendments to the Kern County Air Pollution Control District Rule 210.1
(Changes are underlined)

1. Add the following definition to Section 1 of the Kern County Air Pollution Control District Rule 210.1:

N. Heavy oil means crude oil having an American Petroleum Institute gravity of 20 degrees or less.

2. Section 4E is amended to read as:

When computing the net increase in emissions for modifications, other than modifications to heavy oil production operations, the Control Officer shall take into account the cumulative net emissions changes which were achieved after December 28, 1976, and which are represented by Authorities to Construct or Permits to Operate ~~associated with the existing stationary source and~~ issued to the stationary source ~~after December 28, 1976,~~ excluding any emissions reductions required to comply with any federal, state, or district law, rule, order, or regulation. When computing the net increase in emissions for modifications to heavy oil production operations, the Control Officer shall take into account the cumulative net emissions changes represented by Authorities to Construct issued to the stationary source after September 12, 1979, excluding any emissions reductions required to comply with any federal, state, or district law, rule, order, or regulation, except Rule 425. Emission reductions resulting from implementation of Rule 425 shall be taken into account in accordance

with the requirements of Rule 425.

3. Section 5 B 4 is amended to read as:

a. A ratio of emissions offsets to emissions (offset ratio) for new sources or modifications, other than heavy oil production operations, of 1.2:1 shall be required for emissions offsets located either:

i. upwind in the same or adjoining counties; or

ii. within a 15 mile radius of the proposed new source or modification.

For emissions offsets located outside of the areas described above, the applicant shall conduct modeling to determine an offset ratio sufficient to show a net air quality benefit in the area affected by emissions from the new source or modification.

b. Emissions from heavy oil production operations shall be offset at a ratio of:

i. 1.0:1 if the emissions used as offsets are owned by the same company and located within the same stationary source which is to be modified:

ii. 1.2:1 if the emissions used as offsets from different companies and located within the same oil field (Western Kern County Fields or Central Kern County Fields as defined in this rule) as the proposed new stationary source or modification;

iii. 1.5:1 if the emissions used as offsets are located outside of the oil field (Western Kern County Fields or Central Kern County Fields as defined in this rule) in which the proposed new stationary source or modification is located, regardless of whether they are owned by the same or different companies.

Notwithstanding any other provision of this section the yearly emissions profiles and the yearly emissions offset profiles for a source object to this section may be constructed based on the daily emissions from the source averaged on a monthly basis. In such event, an offset ratio of 2.0:1 shall be required.

4. Section 5 B 7 is amended to read as:

Emissions reductions resulting from measures required by adopted federal, state, or district laws, rules or regulations shall not be allowed as emissions offsets unless a complete application incorporating such offsets was filed with the District prior to the date of adoption of the laws, rules or regulations, with the exception of Rule 425. Emission reductions resulting from implementation of Rule 425 shall be used in accordance with the provisions in that rule.

5. Section 5 B 8 is amended to read as:

The Control Officer shall allow emissions reductions which exceed those required by this rule for a new source or modification to be banked for use in the future by the applicant. All such reductions, when used as offsets for the increased emissions from a proposed new source or modifications, shall be used in accordance with the other provisions of this Section.

6. Section 5 B 9 and 5 B 10 are renumbered to 5 B 10 and 5 B 11 respectively.

7. Section 5 B 9 is added and reads:

Emission reductions achieved by the stationary source prior to the establishment of the District's banking system shall be used only for determining the net cumulative changes of emissions from that source. Such emission reductions, as well as emission reductions achieved on or after the establishment of the banking system pursuant to Health and Safety Code Sections 40709-40713, shall be allowed to be banked and transferred according to the requirements of the system.

State of California

AIR RESOURCES BOARD

Response to Significant Environmental Issues

Item: Public Hearing to Consider Amendments to the Rules and Regulations of the Kern County Air Pollution Control District-Amendments to Rule 210.1, Standard for Authority to Construct, and Addition of Rule 425, Relating to Retrofit Control for Emissions of Oxides of Nitrogen from Oil Field Steam Generators

Public Hearing Date: March 5 and 6, 1980

Response Date: March 6, 1980

Issuing Authority: Air Resources Board

Comment: none

Response: N/A

CERTIFIED: Sally Rump
Sally Rump, Board Secretary

Date: 3/20/80

State of California

Memorandum

To : Huey D. Johnson
Secretary
RESOURCES AGENCY

Date : March 24, 1980

Subject : Filing of Notice of Decision of the Air Resources Board

From : Air Resources Board

Pursuant to Title 17, Section 60007(b), and in compliance with Air Resources Board certification under section 21080.5 of the Public Resources Code, the Air Resources Board hereby forwards for posting the attached notice of decision and response to environmental comments raised during the comment period.

Sally Rump

Sally Rump
BOARD SECRETARY

attachments
Resolution 80-4

State of California
AIR RESOURCES BOARD

Resolution 80-5

March 5, 1980

WHEREAS, Section 39601 of the Health and Safety Code authorizes the Air Resources Board to adopt standards, rules and regulations necessary for the proper execution of the powers and duties granted to and imposed upon the Board by law; and

WHEREAS, Section 43210 of the Health and Safety Code requires that the Board adopt regulations which provide for the testing of new motor vehicles on factory assembly lines or in such manner as the Board determines best suited to carry out the purpose of Part 5 (commencing with Section 43000), Division 26, of the Health and Safety Code; and

WHEREAS, Section 43000(e) of the Health and Safety Code states that emission standards applied to new motor vehicles are standards with which all new motor vehicles shall comply; and

WHEREAS, a public hearing and other administrative proceedings have been held in accordance with the provisions of the Administrative Procedure Act (Government Code, Title 2, Division 3, Part 1, Chapter 4.5);

NOW, THEREFORE BE IT RESOLVED, that the Board hereby amends its regulations in Article 2, Subchapter 1, Chapter 3, Title 13, California Administrative Code, and confirms Board adoption of the following Section 1960.2 which reads:

1960.2 Special Standards for 1980 and 1981 Model Passenger Cars

(a) Notwithstanding any other provision of this Chapter, for any vehicle manufacturer who is subject to "in lieu" standards pursuant to Section 202(b)(1)(B) of the Clean Air Act as amended in 1977, the oxides of nitrogen emissions from 1980 and 1981 model passenger cars shall not exceed an assembly line test level of 1.0 grams per vehicle mile as determined on a production average basis as measured by calendar quarter and evaluated on a cumulative basis.

(b) The oxides of nitrogen emissions from each 1980 and 1981 model passenger car engine family and subgroup produced by a manufacturer pursuant to this section shall not exceed a standard of 1.5 grams per vehicle mile.

(c) For the purposes of testing performed pursuant to Subchapter 2, Article 1, (Assembly Line Testing), the deterioration factors to be applied to 1981 model passenger cars shall be determined by the Executive Officer after taking into account certification and engineering data for similar vehicles.

(d) Joint ARB-manufacturer evaluations of production average data will be made each six months, starting with production test data accumulated through December 21, 1979, and appropriate relief will be made available to such manufacturer should unanticipated technical problems yield an inability to meet the production average level required by this section.

(e) All definitions, standards, test procedures and other requirements of this Chapter not inconsistent with this section shall apply to all vehicles produced by such manufacturer for sale in California.

NOTE: Authority cited: Section 39600 and 39601, Health and Safety Code.
Reference: Sections 43100 and 43101, Health and Safety Code.

BE IT FURTHER RESOLVED, that the Board hereby amends: (1) the "California Assembly-Line Test Procedures for 1980 Model Year Passenger Cars, Light-Duty Trucks and Medium-Duty Vehicles," (2) "California Assembly-Line Test Procedures for 1981 Model Year Passenger Cars, Light-Duty Trucks and Medium-Duty Vehicles," (3) "California Exhaust Emissions Standards and Test Procedures for 1980 Model Passenger Cars, Light-Duty Trucks, and Medium-Duty Vehicles," and (4) "California Exhaust Emission Standards and Test Procedures for 1981 and Subsequent Model Passenger Cars, Light Duty Trucks and Medium-Duty Vehicles" as set forth in Attachments 1, 2, 3, and 4, respectively.

BE IT FURTHER RESOLVED, that the Board hereby finds that its regulations in Sections 1960.2, 2058 and 2059, Title 13, California Administrative Code, the 1980 and 1981 assembly-line test procedures and related exhaust emission standards and test procedures are individually for each vehicle category, and, in the aggregate, at least as protective of public health and welfare as applicable federal regulations.

I certify that the above is a true and correct copy of Resolution 80-5, as passed by the Air Resources Board.

Sally Rump
BOARD SECRETARY

State of California
AIR RESOURCES BOARD

California Assembly-Line Test Procedures for ~~1979~~ 1980 Model Year Passenger Cars, Light-Duty Trucks and Medium-Duty Vehicles

Adopted: November 16, 1978
Amended: January 30, 1979
Amended: May 9, 1979
Amended: March 5, 1980

Note: These procedures are printed in a style to emphasize the differences from the 1979 Assembly-Line Test Procedures. Additions are indicated by underlining and deletions are lined out. Modifications to Section 3.(g) made by the Executive Officer in compliance with the Boards directive are shown by two underlines. March 5, 1980 changes are listed in Part 5.

State of California

AIR RESOURCES BOARD

California Assembly-Line Test Procedures for ~~1979~~ 1980
Model Year Passenger Cars, Light-Duty
Trucks and Medium-Duty Vehicles

A. General Provisions

1. Applicability

These test procedures, adopted pursuant to Section 43210 of the California Health and Safety Code, are applicable to 1980 model year gasoline and diesel powered passenger cars, ~~gasoline-and diesel-powered~~ light-duty trucks, and ~~gasoline-and-diesel-powered~~ medium-duty vehicles having an engine displacement of 50 cubic inches or greater, except motorcycles, subject to registration and manufactured for sale in California.

2. Compliance

The procedures specify two types of tests: (1) a short inspection test to be applied to every vehicle before sale, and (2) a quality audit test according to the "California Exhaust Emission Standards and Test Procedures for 1980 Model Passenger Cars, Light-Duty Trucks and Medium-Duty Vehicles." A vehicle is in compliance with these assembly-line standards and test procedures when that vehicle is in compliance with the inspection test requirements and that vehicle's engine family is in compliance with the quality audit test requirements. Since quality audit evaluations occur less

frequently than the inspection tests, a vehicle which passes the inspection test may be presumed to be in compliance with the full assembly-line procedures pending the quality audit evaluation of that vehicle's engine family.

3. Decal

Section 43200 of the Health and Safety Code requires manufacturers to affix a window decal in accordance with specific requirements. No vehicle subject to these test procedures may be sold and registered in this state which is not in compliance with the requirements of Section 43200 and this paragraph.

For vehicles manufactured during the first calendar quarter of model production and not to exceed 45 calendar days thereafter, the exhaust emissions shown on the window decal shall be the highest values from the engine family emission data fleet passing certification. Not more than 45 calendar days after the first quarter and each succeeding calendar quarter of production, the exhaust emissions shown on the window decal shall be the average quality audit

frequently than the inspection tests, a vehicle which passes the inspection test may be presumed to be in compliance with the full assembly-line procedures pending the quality audit evaluation of that vehicle's engine family.

3. Decal

Section 43200 of the Health and Safety Code requires manufacturers to affix a window decal in accordance with specific requirements. No vehicle subject to these test procedures may be sold and registered in this state which is not in compliance with the requirements of Section 43200 and this paragraph.

For vehicles manufactured during the first calendar quarter of model production and not to exceed 45 calendar days thereafter, the exhaust emissions shown on the window decal shall be the highest values from the engine family emission data fleet passing certification. Not more than 45 calendar days after the first quarter and each succeeding calendar quarter of production, the exhaust emissions shown on the window decal shall be the average quality audit

values for the engine family during the previous calendar quarter of production. During the second calendar quarter, however, the manufacturer may continue using the decal showing the highest values from the engine family emission data fleet, if the first calendar quarter is a short production period (less than a full calendar quarter). For engine families certified by carry-over, the emission data values from the last full quarter of the previous year's production may be used. For a model-year build-out production period, the decal emission values used for the previous production quarter may be used. Each vehicle emission decal shall have the following statement displayed thereon:

"This vehicle has been tested under and conforms to California Assembly-Line Test Requirements."

4. Access

Air Resources Board personnel and mobile laboratories shall have access to vehicle assembly plants, distribution facilities and test facilities for the purpose of vehicle selection, testing and observation. ~~To the extent practical and except where the Executive Officer has probable cause for investigation possible violation of these test procedures or of the applicable emission standards, the frequency of access shall be proportional among manufacturers in relation to California vehicle sales.~~ Scheduling of access shall be arranged with the designated manufacturer's representative and shall not unreasonably disturb normal operations.

5. Variations and Exemptions

Variations from these procedures which produce substantially equivalent results may be authorized by the Executive Officer. In extraordinary circumstances where compliance with these procedures is not possible or practicable, a manufacturer may appeal to the Air Resources Board for a temporary exemption.

B. Inspection Test Procedures

This inspection test shall be performed on all vehicles subject to these test procedures.

1. Inspection Test Procedures

(a) Functional Test

Functional tests of the engine components and control systems which affect emissions shall be made prior to the steady-state emissions tests. If a vehicle fails one or more functional tests, it must be repaired and pass a functional retest before it can be emission tested.

A list of the items to be functionally checked and a procedure for performing these checks shall be submitted to the Executive Officer prior to the start of production. Within 60 days of its receipt the Executive Officer may require revisions to the proposal.

5. Variations and Exemptions

Variations from these procedures which produce substantially equivalent results may be authorized by the Executive Officer. In extraordinary circumstances where compliance with these procedures is not possible or practicable, a manufacturer may appeal to the Air Resources Board for a temporary exemption.

B. Inspection Test Procedures

This inspection test shall be performed on all vehicles subject to these test procedures.

1. Inspection Test Procedures

(a) Functional Test

Functional tests of the engine components and control systems which affect emissions shall be made prior to the steady-state emissions tests. If a vehicle fails one or more functional tests, it must be repaired and pass a functional retest before it can be emission tested.

A list of the items to be functionally checked and a procedure for performing these checks shall be submitted to the Executive Officer prior to the start of production. Within 60 days of its receipt the Executive Officer may require revisions to the proposal.

(b) Steady State Emissions Test

The vehicle engine shall be adjusted to the manufacturer's specifications for delivery to the customer prior to the steady-state emissions test. This test shall consist of a determination of HC and CO exhaust concentrations with the engine operating in a normal idle condition. All tests, including those of control limit test vehicles, shall be conducted as follows:

(1) Vehicles shall be tested in the normal "warmed-up" operating temperature range, i.e., after the choke is fully open and the engine is at curb idle speed, but before thermal override devices are actuated to prevent overheating. The test may be performed in any transmission gear; however the same gear shall be used for control limit test vehicles and production vehicles. For each engine family, the idle test may be performed without AIR provided that the control limit vehicles are tested both with and without AIR. The requirements of section B.(3)(g) must be met with AIR.

The control limit test vehicles and all production vehicles should be warmed-up and tested in the same manner.

(2) The sampling probes of the analytical system shall be inserted into the exhaust outlets far enough to avoid dilution with the outside air. Where this is not possible, a tailpipe extension shall be used.

(3) A vehicle which fails a steady-state emissions test shall be retested or repaired and shall pass on retest prior to sale.

2. Evaluation

Any vehicle tested by the steady-state emissions test showing emissions less than the control limits established for its engine family or subgroup and which had previously passed the functional tests will be considered to be in compliance with the inspection test requirements.

3. Control Limits

The control limits for each engine family or subgroup at the start of a model year will be determined as follows:

(a) Measure the emissions from the first 100 vehicles of each engine family or subgroup tested by the steady-state assembly-line inspection test.

(b) Determine the mean emission level and standard deviation for each pollutant (HC and CO).

(c) The control limit for each pollutant is the sum of the mean plus two times the standard deviation for that pollutant.

(d) Until the first control limits are established the manufacturer shall use temporary control limits based on the first ter tests. These ten vehicles are deemed to meet the control limits so established.

(3) A vehicle which fails a steady-state emissions test shall be retested or repaired and shall pass on retest prior to sale.

2. Evaluation

Any vehicle tested by the steady-state emissions test showing emissions less than the control limits established for its engine family or subgroup and which had previously passed the functional tests will be considered to be in compliance with the inspection test requirements.

3. Control Limits

The control limits for each engine family or subgroup at the start of a model year will be determined as follows:

(a) Measure the emissions from the first 100 vehicles of each engine family or subgroup tested by the steady-state assembly-line inspection test.

(b) Determine the mean emission level and standard deviation for each pollutant (HC and CO).

(c) The control limit for each pollutant is the sum of the mean plus two times the standard deviation for that pollutant.

(d) Until the first control limits are established the manufacturer shall use temporary control limits based on the first ter tests. These ten vehicles are deemed to meet the control limits so established.

(e) (i) For control systems that do not use catalytic converters - If the HC control limit value is determined in subparagraph (c) is less than 100 ppm, the HC control limit value may be increased by up to 50 ppm, not to exceed 100 ppm. If the CO control limit determined in subparagraph (c) is less than 1.0 percent, the CO control limit may be increased by up to 0.5 percent, not to exceed 1.0 percent.

(ii) For control systems that use catalytic converters - If the HC control limit value determined in subparagraph (c) is less than 50 ppm, the control limit value may be increased by up to 30 ppm, not to exceed 50 ppm.

If the CO control limit determined in subparagraph (c) is less than 0.5 percent, the CO control limit may be increased by up to 0.3 percent, not to exceed 0.5 percent.

(f) Idle control limit values may be rounded to the nearest 10 ppm HC and 0.1 percent CO in conformance to ASTM E29-67, except where this would result in a zero value.

(g) The maximum allowable steady-state control limits for HC and CO are those values used as the idle mode standard shown in Section 2176, Title 13 of the California Administrative Code for the ~~1979~~ 1980 model-year. An exemption to this requirement will be granted providing the manufacturer submits emission data with each quarterly report listed in one of the options below:

(1) Submit with each quarterly assembly-line report HC and CO emission values measured at engine idle speed for each quality audit vehicle tested and the computed mean and standard deviation of HC and CO emission results for the total number of vehicles tested, by engine family. Measurements of HC and CO shall be conducted immediately following completion of the dynamometer run and vehicles shall be in a state described under B.1 (b) (1) above. If less than 30 vehicles were quality audit tested during the reporting quarter the computation of the means and standards deviation are not required.

(2) Submit quarterly HC and CO emission values measured at engine idle speed for a minimum of 30 vehicles in the engine family or sub-group immediately after these vehicles have complied with the assembly-line inspection procedures and have either been run-in a distance of 50 miles (on the road or dynamometer) or after other appropriate engine break-in has been performed and the engine is operating at a fully warmed-up condition as described in B.1 (b) (1) above. In addition to emission results of individual vehicles, the mean and standard deviation shall be computed and submitted.

(3) The manufacturer may propose other methods to achieve results equivalent to the two options above. These emission data shall be obtained from stabilized vehicles which have emissions control systems with no defects and are properly adjusted to manufacturers specifications.

(h) Control limits with AIR operating shall be calculated and reported for information purposes for those engine families that are tested without AIR in operation.

(1) Submit with each quarterly assembly-line report HC and CO emission values measured at engine idle speed for each quality audit vehicle tested and the computed mean and standard deviation of HC and CO emission results for the total number of vehicles tested, by engine family. Measurements of HC and CO shall be conducted immediately following completion of the dynamometer run and vehicles shall be in a state described under B.1 (b) (1) above. If less than 30 vehicles were quality audit tested during the reporting quarter the computation of the means and standards deviation are not required.

(2) Submit quarterly HC and CO emission values measured at engine idle speed for a minimum of 30 vehicles in the engine family or sub-group immediately after these vehicles have complied with the assembly-line inspection procedures and have either been run-in a distance of 50 miles (on the road or dynamometer) or after other appropriate engine break-in has been performed and the engine is operating at a fully warmed-up condition as described in B.1 (b) (1) above. In addition to emission results of individual vehicles, the mean and standard deviation shall be computed and submitted.

(3) The manufacturer may propose other methods to achieve results equivalent to the two options above. These emission data shall be obtained from stabilized vehicles which have emissions control systems with no defects and are properly adjusted to manufacturers specifications.

(h) Control limits with AIR operating shall be calculated and reported for information purposes for those engine families that are tested without AIR in operation.

Control limit values shall be recalculated for each production quarter based on the measured emissions from at least 100 vehicles produced during the last half of the preceding quarter of production for each engine family or subgroup tested by the steady-state emissions test. When production levels do not permit compliance with the above, data from vehicles produced during the first half of the preceding quarter may be used. If the quarterly production of any engine family is less than 100 vehicles, the manufacturer shall use the test results from all vehicles produced during that quarter in determining the control limit values for the next quarter.

The Executive Officer shall be notified within one week if control limit values are recalculated following running changes which affect idle emissions levels. The new control limit values and the date they first went into effect shall be part of the notification.

All testing, reports, evaluations, etc. shall be by engine family except when the Executive Officer has approved a breakdown by subgroups (e.g., different carburetors, engine displacements, control systems, transmissions, and inertia weights), by assembly plant, or both.

Note: Data from any vehicle indicating gross engine malfunction, and/or failure or disconnection of any emission control component, shall be excluded from that used for generating control limits. Retest data on vehicles exceeding the control limits shall not be used in determining control limits for subsequent quarters.

4. Reports

Reports shall be submitted to the Air Resources Board within 45 calendar days of the end of each calendar quarter and within 45 calendar days of the end of the manufacturer's model production year. Results for two different model years shall not be combined statistically.

The report shall include:

(a) The temporary quarterly control limit values obtained for the first quarter of production.

(b) The mean and the standard deviation of the steady-state emissions tests used to determine the quarterly control limits.

(c) The steady-state control limit values for the next quarter's production.

All HC values should be stated as hexane equivalents for NDIR measurement and ppm carbon if a flame ionization detector is used.

C. Quality Audit Test Procedures

1. Standards and Test Procedures

The emission standards and the exhaust sampling and analytical procedures shall be those described in the "California Exhaust

4. Reports

Reports shall be submitted to the Air Resources Board within 45 calendar days of the end of each calendar quarter and within 45 calendar days of the end of the manufacturer's model production year. Results for two different model years shall not be combined statistically.

The report shall include:

(a) The temporary quarterly control limit values obtained for the first quarter of production.

(b) The mean and the standard deviation of the steady-state emissions tests used to determine the quarterly control limits.

(c) The steady-state control limit values for the next quarter's production.

All HC values should be stated as hexane equivalents for NDIR measurement and ppm carbon if a flame ionization detector is used.

C. Quality Audit Test Procedures

1. Standards and Test Procedures

The emission standards and the exhaust sampling and analytical procedures shall be those described in the "California Exhaust

Emission Standards and Test Procedures for ~~1979~~ 1980 Model Passenger Cars, Light-Duty Trucks and Medium-Duty Vehicles" applicable to vehicles tested for exhaust emissions only, with the following exceptions or additions:

(a) After the inspection tests, no emissions tests may be performed on a quality-audit vehicle prior to the first quality audit test, except where such tests are run on all vehicles manufactured for sale in California.

(b) The vehicle shall begin the test sequence as received from the inspection test, except for mileage accumulation or engine run-in. The schedule for mileage accumulation or engine run-in and any changes to the schedule must be submitted to the Executive Officer with each quarterly report. This schedule must be adhered to for all quality audit testing within an engine family and subgroup or engine family and assembly plant as appropriate.

(c) A new carbon canister may be installed on the vehicle at the start of the test sequence. The test sequence shall consist of one Urban Dynamometer Driving Schedule (UDDS) test procedure, followed by a cold-soak and CVS test. The manufacturer may request permission to use an alternate preconditioning procedure provided the manufacturer demonstrates that it will not affect the loading of the carbon canister when compared with the UDDS.

(d) If the vehicle is shipped to a remote facility for quality audit testing, ~~the normal pre-delivery inspection may be performed according to the manufacturer's written instructions to its dealers. However, if a repair or adjustment is made, then this information shall be included in the quarterly report.~~ in addition to the above provisions (a), (b) and (c), correction of damage or maladjustment which may reasonably be found to have resulted from shipment of the vehicle is permitted only after the initial test of the vehicle, except for compelling reasons. Compelling reasons are that the vehicle is not testable, or is not reasonably operative, or is not safe to drive, or that damage to the vehicle would be likely if the vehicle were tested.

All adjustments or repairs performed on vehicles prior to each test shall be reported to the Executive Officer. In the event a retest is performed application may be made to the Executive Officer for permission to substitute the after-repair test results for the original test reuslts. The Executive Officer will either affirm or deny the application within ten working days.

However, if 100% of the manufacturer's production is given a particular correction of damage or malajustment by the manufacturer's own personnel subsequent to consignment for shipping from that manufacturer's assembly-line, that same correction of damage

(d) If the vehicle is shipped to a remote facility for quality audit testing, ~~the normal pre-delivery inspection may be performed according to the manufacturer's written instructions to its dealers. However, if a repair or adjustment is made, then this information shall be included in the quarterly report.~~ in addition to the above provisions (a), (b) and (c), correction of damage or maladjustment which may reasonably be found to have resulted from shipment of the vehicle is permitted only after the initial test of the vehicle, except for compelling reasons. Compelling reasons are that the vehicle is not testable, or is not reasonably operative, or is not safe to drive, or that damage to the vehicle would be likely if the vehicle were tested.

All adjustments or repairs performed on vehicles prior to each test shall be reported to the Executive Officer. In the event a retest is performed application may be made to the Executive Officer for permission to substitute the after-repair test results for the original test reuslts. The Executive Officer will either affirm or deny the application within ten working days.

However, if 100% of the manufacturer's production is given a particular correction of damage or malajustment by the manufacturer's own personnel subsequent to consignment for shipping from that manufacturer's assembly-line, that same correction of damage

or maladjustment will be allowed prior to initial testing of the specific vehicles randomly selected for testing, provided the manufacturer's written instructions are submitted to the Executive Officer.

2. Vehicle Sample Selection

The vehicle manufacturer shall randomly select vehicles within each engine family for quality audit testing. Each selected vehicle for quality audit teting must pass the inspection test, be equipped with emission control systems certified by the ARB, and be representative of the manufacturer's California sales. The procedure for randomly selecting vehicles must be submitted to the Executive Officer prior to production.

A continuous sample rate shall be chosen by the manufacturer to provide a sample which is representative of the total production. The manufacturer shall select a sample rate which he or she determines will be satisfactory for use by the Air Resources Board in determining the number of vehicles in the entire population of a particular engine family which do not meet Board established emission standards by extrapolation from the percentage of the sample not meeting the standards. The results from the sample may be extrapolated to the entire population subject to the provisions relating to vehicle exclusion contained in Paragraph 3 below. The manufacturer shall notify the Executive Officer of any changes to the sample rate. The date of such changes shall be reported in accordance with Paragraph 4 below.

~~Medium-duty-vehicles-selected-for-quality-audit-testing-shall-be divided-into-two-groups.--The-first-group-(Group-A),-comprising approximately-two-thirds-of-the-sample,-shall-be-identical-to-those configurations-(i.e.,-transmission,-inertia-weight,-and-axle-ratio) selected-for-certification-testing.--The-second-group-(Group-B), comprising-approximately-the-remaining-one-third,-shall-be-those configurations-not-selected-for-certification-testing.--Random selection-from-the-entire-engine-family-will-be-accepted,-if-Group A-vehicles-comprise-at-least-65%-of-the-sample.~~

Four wheel drive vehicles which can be manually shifted to a two wheel drive mode will be tested in the normal on-highway two wheel drive mode of operation. If full time four wheel drive vehicles are selected, substitutions may be made with comparable two wheel drive vehicles of the same engine family. If comparable two wheel drive vehicles are not available, selected full time four wheel drive vehicles will be tested after having the front drive wheels temporarily disengaged or the front end of the vehicle elevated.

The Executive Officer may, upon notice to the manufacturer, require the sample rate to be increased to a maximum of ten percent of production (not to exceed 30 additional vehicles) of the calendar quarterly production of any engine family by invoking Section 2110, Chapter 3, Title 13 of the California Administrative Code.

3. Evaluation

The evaluation shall be performed on sample sizes containing 30 or more vehicles. If a sample size for a particular production quarter is less than 30 vehicles, the data from that quarter shall be combined with the data from each successive quarter until at least 30 vehicles have been quality-audit tested. If the sample size for the last quarter's production does not contain at least 30 vehicles, the data from the last quarter shall be combined with each preceding quarter until the sample size contains at least 30 vehicles. For an engine family which contains both light-duty trucks and medium-duty vehicles, all references in this test procedure to engine family shall mean light-duty truck subgroup or medium-duty vehicle subgroup. ~~Only Group A medium duty vehicles will be evaluated. The emission data from Group B medium duty vehicles will be for information only.~~

Based upon additional information submitted by a manufacturer, the Executive Officer may allow rejection of any data from vehicles if they are considered to be not representative of production.

For each production quarter if 30 or more vehicles are tested, the ARB shall consider that probable cause exists for finding a violation by any engine family if the average emissions of any pollutant, after multiplying the emission data of each vehicle

3. Evaluation

The evaluation shall be performed on sample sizes containing 30 or more vehicles. If a sample size for a particular production quarter is less than 30 vehicles, the data from that quarter shall be combined with the data from each successive quarter until at least 30 vehicles have been quality-audit tested. If the sample size for the last quarter's production does not contain at least 30 vehicles, the data from the last quarter shall be combined with each preceding quarter until the sample size contains at least 30 vehicles. For an engine family which contains both light-duty trucks and medium-duty vehicles, all references in this test procedure to engine family shall mean light-duty truck subgroup or medium-duty vehicle subgroup. ~~Only Group A medium duty vehicles will be evaluated. The emission data from Group B medium duty vehicles will be for information only.~~

Based upon additional information submitted by a manufacturer, the Executive Officer may allow rejection of any data from vehicles if they are considered to be not representative of production.

For each production quarter if 30 or more vehicles are tested, the ARB shall consider that probable cause exists for finding a violation by any engine family if the average emissions of any pollutant, after multiplying the emissior. data of each vehicle

by the appropriate certification deterioration factor, and the assigned methane content correction factor (for hydrocarbons only), exceed the applicable ~~1979~~ 1980 exhaust emission standards, when rounded to the same number of significant digits as the standard.

The Executive Officer may invoke Section 2109, Chapter 3, Title 13 of the California Administrative Code, if probable cause is found for a full or combined production quarter. The Executive Officer may invoke Section 2110, Chapter 3, Title 13 of the California Administrative Code if probable cause is found for a short start-up production period (less than a full calendar quarter), for the first thirty vehicles quality audit tested during any production quarter or from the start of production, or for vehicles evaluated in accordance with the monthly evaluation required by paragraph 4 below. In addition, the ARB may seek statutory penalties pursuant to Sections 43211 and 43212 of the California Health and Safety Code at the end of each full or combined calendar quarter of production.

If the Executive Officer invokes Section 2109 or 2110, an evaluation will be made on vehicles produced subsequent to the invocation of a plan adopted pursuant to Section 2109 or 2110 ~~with each report~~ as long as the sample size contains at least 30 vehicles.

If more than 1.0 percent (at least two vehicles) of the sample within an engine family has projected emissions which exceed the applicable standards by more than 2.33 standard deviations at the time of any evaluation of that family's average emissions, the manufacturer shall report such fact to the Executive Officer within ten working days. Within thirty working days the manufacturer shall submit: (a) an analysis of the projected average emissions for each engine code/transmission type/inertia weight and combination within that family; (b) an engineering evaluation of the cause of failure for each vehicle which exceeded the standard by more than 2.33 standard deviations; (c) the manufacturer's opinion as to the nature of the problem; and (d) any correction action proposed by the manufacturer.

The Executive Officer shall review the report, and may require that the proposed corrective action be taken. If, after review of the report, the Executive Officer finds the proposed corrective action inadequate, the Executive Officer may invoke Section 2109 or 2110, as appropriate.

Methane Content Correction Factor (MCCF)

1. For an engine family certified to the non-methane hydrocarbon standard (0.39) either: the measured total hydrocarbon value shall be multiplied by the non-methane deterioration factor (DF) and by a MCCF of 0.89 for passenger cars and 1.0 for trucks (or alternate value approved by the ARB). Or: The manufacturer may measure the non-methane hydrocarbon content which shall be multiplied by the non-methane deterioration factor (DF).

If more than 1.0 percent (at least two vehicles) of the sample within an engine family has projected emissions which exceed the applicable standards by more than 2.33 standard deviations at the time of any evaluation of that family's average emissions, the manufacturer shall report such fact to the Executive Officer within ten working days. Within thirty working days the manufacturer shall submit: (a) an analysis of the projected average emissions for each engine code/transmission type/inertia weight and combination within that family; (b) an engineering evaluation of the cause of failure for each vehicle which exceeded the standard by more than 2.33 standard deviations; (c) the manufacturer's opinion as to the nature of the problem; and (d) any correction action proposed by the manufacturer.

The Executive Officer shall review the report, and may require that the proposed corrective action be taken. If, after review of the report, the Executive Officer finds the proposed corrective action inadequate, the Executive Officer may invoke Section 2109 or 2110, as appropriate.

Methane Content Correction Factor (MCCF)

1. For an engine family certified to the non-methane hydrocarbon standard (0.39) either: the measured total hydrocarbon value shall be multiplied by the non-methane deterioration factor (DF) and by a MCCF of 0.89 for passenger cars and 1.0 for trucks (or alternate value approved by the ARB). Or: The manufacturer may measure the non-methane hydrocarbon content which shall be multiplied by the non-methane deterioration factor (DF).

2. For an engine family certified to the total hydrocarbon standard (0.41), the measured total hydrocarbon value shall be multiplied by the total hydrocarbon deterioration factor (DF) and by the MCCF of 0.89 for passenger cars and 1.0 for trucks (or other alternate values approved by the Executive Officer.)

4. Reports

Each vehicle manufacturer shall submit a report to the Air Resources Board within 45 calendar days after the end of each calendar quarter and 45 calendar days after the end of the production year. More frequent reports may be required if the Executive Officer invokes Section 2109 or 2110, Chapter 3, Title 13 of the California Administrative Code. Each vehicle manufacturer shall review the test results of the first 30 test vehicles of each engine family for each calendar quarter or production or from the start of production, and the quarter's cumulative test results of each engine family at the end of each month. If the sample size is 30 or more vehicles and either of the two conditions specified in the Evaluation Section are met, the Executive Officer shall be notified within 10 working days.

The quarterly report shall include the following:

(a) The total production and sample size for each engine family.

(b) A description of each test vehicle (i.e., date of test, engine family, engine size, vehicle identification number, fuel system (e.g., number of venturi, fuel injection, etc.), transmission type, inertia weight, true road load horsepower, and engine code or calibration number and test location).

(c) The CVS exhaust emission data ~~(including carbon dioxide data) for each test vehicle,~~ (corrected for methane, if applicable) and carbon dioxide data for each test vehicle ~~both before and after applying deterioration factors~~. The data reported shall be rounded to one significant figure beyond the number of significant figures in the applicable standard. Deterioration factors shall be stated, then applied to the data. The data reported after the deterioration factors are applied shall be rounded using the "rounding off method" specified in ASTM: E29-67 to the number of places to the right of the decimal point as follows:

	HC	CO	NOx	CO_2
Passenger cars	.XXX	.XX	.XX	.X
Trucks	.XX	.X		

(d) The retest emissions data as described in paragraph (c) above for any vehicles failing the initial test, and description of the corrective measures taken including specific components replaced or adjusted.

(e) A statistical analysis of the quality-audit test results for each engine family stating:

(1) Number of vehicles tested.

(2) Average emissions and standard deviation of the sample for hydrocarbons ~~each pollutant~~ (corrected for methane, if applicable), carbon monoxide and oxides of nitrogen, ~~including carbon dioxide,~~ both

(c) The CVS exhaust emission data ~~(including carbon dioxide data) for each test vehicle,~~ (corrected for methane, if applicable) and carbon dioxide data for each test vehicle ~~both before and after applying deterioration factors~~. The data reported shall be rounded to one significant figure beyond the number of significant figures in the applicable standard. Deterioration factors shall be stated, then applied to the data. The data reported after the deterioration factors are applied shall be rounded using the "rounding off method" specified in ASTM: E29-67 to the number of places to the right of the decimal point as follows:

	HC	CO	NOx	CO_2
Passenger cars	.XXX	.XX	.XX	.X
Trucks	.XX	.X		

(d) The retest emissions data as described in paragraph (c) above for any vehicles failing the initial test, and description of the corrective measures taken including specific components replaced or adjusted.

(e) A statistical analysis of the quality-audit test results for each engine family stating:

(1) Number of vehicles tested.

(2) Average emissions and standard deviation of the sample for hydrocarbons ~~each pollutant~~ (corrected for methane, if applicable), carbon monoxide and oxides of nitrogen, ~~including carbon dioxide,~~ both

before and after applying deterioration factors. In the latter case, the individual test points shall be multiplied by deterioration factors prior to computing the average and standard deviation. The average emissions and standard deviation of the sample for carbon dioxide shall also be listed.

~~(e) Group-A-and-Group-B-medium-duty-vehicles-shall-be-identified and-reported-separately.~~

(f) Since the manufacturer has the option of certifying vehicles with either non-methane or total hydrocarbon instrumentation, the specific method used for quality audit testing shall be indicated for each engine family.

(g) If both four-wheel and two-wheel drive vehicles are included in a light duty truck engine family under 4,000 pounds inertia weight, then quality audit test data from four-wheel drive vehicles shall be distinguished from the summarized separately from two-wheel drive vehicles.

(h) Control limits with AIR operating shall be calculated and reported for information purposes for those engine families that are tested without AIR in operation.

(i) The final report shall include the date of the end of the manufacturer's model production year for each engine family.

5. Special Requirements for Low Production Vehicle Manufacturers.

The following requirements apply only to those vehicle manufacturers

who were granted relief, by the Executive Officer, under Title 13, California Administrative Code (C.A.C.) Section 1960.2 Special Standards for 1980 and 1981 Model Passenger Cars.

The requirements listed below are to be followed as supplemental to and when contrary to other requirements specified in part "C. Quality Audit Test Procedures," Section "3. Evaluation" and "4. Reports." These requirements are listed to implement, define and clarify the Board requirements of C.A.C. Section 1960.2:

a. Additional Reporting Requirements

(1) NOx Emissions

The cumulative average of oxides of nitrogen (NOx) emissions from the entire quality audit passenger car line shall be reported both before and after applying deterioration factors for:

(a) All 1980 model cars tested during each calendar quarter.

(b) All 1980 model cars tested to date by the end of each calendar quarter.

(c) All 1980 model cars tested to date by December 31, 1979, June 30, 1980 and by December 31, 1980.

(2) Subgroups

The NOx emission results shall be averaged and reported by engine family subgroup in each regular quarterly assembly-line report.

who were granted relief, by the Executive Officer, under Title 13, California Administrative Code (C.A.C.) Section 1960.2 Special Standards for 1980 and 1981 Model Passenger Cars.

The requirements listed below are to be followed as supplemental to and when contrary to other requirements specified in part "C. Quality Audit Test Procedures," Section "3. Evaluation" and "4. Reports." These requirements are listed to implement, define and clarify the Board requirements of C.A.C. Section 1960.2:

a. Additional Reporting Requirements

(1) NOx Emissions

The cumulative average of oxides of nitrogen (NOx) emissions from the entire quality audit passenger car line shall be reported both before and after applying deterioration factors for:

(a) All 1980 model cars tested during each calendar quarter.

(b) All 1980 model cars tested to date by the end of each calendar quarter.

(c) All 1980 model cars tested to date by December 31, 1979, June 30, 1980 and by December 31, 1980.

(2) Subgroups

The NOx emission results shall be averaged and reported by engine family subgroup in each regular quarterly assembly-line report.

(b) New Requirements

(1) Semi-Annual Evaluations

Joint ARB - manufacturer evaluations will be made each six months to determine compliance with the 1.0 gm/mi NOx production level based on accumulated test results from all 1980 cars tested. The first evaluation will be made based on averaged NOx test data accumulated through December 31, 1979. Subsequent evaluations will be made for data accumulated through June 30, 1980, and also for data accumulated through the end of the 1980 model year production. The cumulative NOx average shall be carried over to the manufacturer's entire 1981 model year passenger car line.

If the NOx value exceeds the 1.0 gm/mi level, but the manufacturer can show that unanticipated technical problems caused the 1.0 gm/mi NOx production average to be exceeded, the appropriate relief will be made available. The relief will be made provided the manufacturer shows reasonable effort was made and will continue to be made towards meeting the 1.0 gm/mi level for future production periods. This includes incorporating into production improved technology as soon as it becomes available.

After the evaluation, the Executive Officer can invoke Section 2109, Title 13 of the California Administrative Code if accumulated results exceed 1.0 gm/mi NOx and the manufacturer has not taken appropriate corrective action.

The reports required by this paragraph and paragraph B.4. should be sent to:

Chief, Mobile Source Control Division
California Air Resources Board
9528 E. Telstar Avenue
El Monte, CA 91731

DEFINITIONS

The definitions in Section 1900 (b), Chapter 3, Title 13 of the California Administrative Code shall apply with the following additions:

1. Calendar Quarter is defined as those three month periods of time which start on the 1st days of January, April, July and October.
2. First or Last Calendar Quarter Production is defined as the calendar quarter in which the production of an engine family begins or ends.
3. End of Assembly-Line is defined as that place where the final inspection test or quality audit test is performed.
4. Assembly-Line Tests are those tests or inspections which are performed at the end of the assembly-line.
5. Assembly-Line Quality Audit Test is defined as the test performed on a minimum sample of 2.0% of the production vehicles for sale in California.
6. Assembly-Line Inspection Tests are those steady-state and functional tests performed on production vehicles for sale in California.
7. Functional Test is defined as a type of test or inspection which is performed on engines or vehicles to detect if the emission control system is operating properly.

The reports required by this paragraph and paragraph B.4. should be sent to:

Chief, Mobile Source Control Division
California Air Resources Board
9528 E. Telstar Avenue
El Monte, CA 91731

DEFINITIONS

The definitions in Section 1900 (b), Chapter 3, Title 13 of the California Administrative Code shall apply with the following additions:

1. Calendar Quarter is defined as those three month periods of time which start on the 1st days of January, April, July and October.
2. First or Last Calendar Quarter Production is defined as the calendar quarter in which the production of an engine family begins or ends.
3. End of Assembly-Line is defined as that place where the final inspection test or quality audit test is performed.
4. Assembly-Line Tests are those tests or inspections which are performed at the end of the assembly-line.
5. Assembly-Line Quality Audit Test is defined as the test performed on a minimum sample of 2.0% of the production vehicles for sale in California.
6. Assembly-Line Inspection Tests are those steady-state and functional tests performed on production vehicles for sale in California.
7. Functional Test is defined as a type of test or inspection which is performed on engines or vehicles to detect if the emission control system is operating properly.

State of California
AIR RESOURCES BOARD

California Assembly-Line Test Procedures for ~~1980~~ 1981 Model Year Passenger Cars. Light-Duty Trucks and Medium-Duty Vehicles

Adopted: December 19, 1979
Amended: March 5, 1980

Note: These procedures are printed in a style to emphasize the differences from the 1980 Assembly-Line Test Procedures as amended May 9, 1979. Additions are indicated by underlining and deletions are lined out with dashes. March 5, 1980 changes are listed in Part 5.

State of California

AIR RESOURCES BOARD

California Assembly-Line Test Procedures for ~~1980~~ 1981 Model Year Passenger Cars, Light-Duty Trucks and Medium-Duty Vehicles

A. General Provisions

1. Applicability

These test procedures, adopted pursuant to Section 43210 of the California Health and Safety Code, are applicable to vehicle manufacturers of ~~1980~~ 1981 model year gasoline and diesel powered passenger cars, light-duty trucks, and medium-duty vehicles having an engine displacement of 50 cubic inches (820 cubic centimeters) or greater, except motorcycles, subject to registration and manufactured for sale in California.

2. Compliance

The procedures specify two types of tests: (1) a short inspection test to be applied to every vehicle before sale, and (2) a quality audit test according to the "California Exhaust Emission Standards and Test Procedures for ~~1980~~ 1981 Model Passenger Cars, Light-Duty Trucks and Medium-Duty Vehicles." A vehicle is in compliance with these assembly-line standards and test procedures when that vehicle is in compliance with the inspection test requirements and that vehicle's engine family is in compliance with the quality audit test requirements. Since quality audit evaluations occur less

frequently than the inspection tests, a vehicle which passes the inspection test may be presumed to be in compliance with the full assembly-line procedures pending meeting the quality audit evaluation of that vehicle's engine family.

3. Decal

Section 43200 of the Health and Safety Code requires manufacturers to affix a window decal in accordance with specific requirements. No vehicle subject to these test procedures may be sold and registered in this state which is not in compliance with the requirements of Section 43200 and this paragraph.

For vehicles manufactured during the first calendar quarter of model production and not to exceed 45 calendar days thereafter, the exhaust emissions shown on the window decal shall be the highest values from the engine family emission data fleet passing certification. Not more than 45 calendar days after the first quarter and each succeeding calendar quarter of production, the exhaust emissions shown on the window decal shall be the average quality audit

frequently than the inspection tests, a vehicle which passes the inspection test may be presumed to be in compliance with the full assembly-line procedures pending meeting the quality audit evaluation of that vehicle's engine family.

3. Decal

Section 43200 of the Health and Safety Code requires manufacturers to affix a window decal in accordance with specific requirements. No vehicle subject to these test procedures may be sold and registered in this state which is not in compliance with the requirements of Section 43200 and this paragraph.

For vehicles manufactured during the first calendar quarter of model production and not to exceed 45 calendar days thereafter, the exhaust emissions shown on the window decal shall be the highest values from the engine family emission data fleet passing certification. Not more than 45 calendar days after the first quarter and each succeeding calendar quarter of production, the exhaust emissions shown on the window decal shall be the average quality audit

values for the engine family during the previous calendar quarter of production. These values shall include the deterioration factor. During the second calendar quarter, however, the manufacturer may continue using the decal showing the highest values from the engine family emission data fleet, if the first calendar quarter is a short production period (less than a full calendar quarter). For engine families certified by carry-over, the emission data values from the last full quarter of the previous year's production may be used. For a model-year build-out production period, the decal emission values used for the previous production quarter may be used. Each vehicle emission decal shall have the following statement displayed thereon:

"This vehicle has been tested under and conforms to California Assembly-Line Test Requirements."

4. Access

Air Resources Board personnel and mobile laboratories shall have access to vehicle assembly plants, distribution facilities and test facilities for the purpose of vehicle selection, testing and observation. Scheduling of access shall be arranged with the designated manufacturer's representative and shall not unreasonably disturb normal operations.

5. Variations and Exemptions

Variations from these procedures which produce substantially equivalent results may be authorized by the Executive Officer. In extraordinary circumstances where compliance with these procedures is not possible or practicable, a manufacturer may appeal to the Air Resources Board for a temporary exemption.

B. Inspection Test Procedures

This inspection test shall be performed on all vehicles subject to these test procedures.

1. Inspection Test Procedures

(a) Functional Test

Functional tests of the engine components and control systems which affect emissions shall be made prior to the steady-state emissions tests. If a vehicle fails one or more functional tests, it must be repaired and pass a functional retest before it can be emission tested.

A list of the items to be functionally checked and a procedure for performing these checks shall be submitted to the Executive Officer prior to the start of production. Within 60 days of its receipt the Executive Officer may require revisions to the proposal.

5. Variations and Exemptions

Variations from these procedures which produce substantially equivalent results may be authorized by the Executive Officer. In extraordinary circumstances where compliance with these procedures is not possible or practicable, a manufacturer may appeal to the Air Resources Board for a temporary exemption.

B. Inspection Test Procedures

This inspection test shall be performed on all vehicles subject to these test procedures.

1. Inspection Test Procedures

(a) Functional Test

Functional tests of the engine components and control systems which affect emissions shall be made prior to the steady-state emissions tests. If a vehicle fails one or more functional tests, it must be repaired and pass a functional retest before it can be emission tested.

A list of the items to be functionally checked and a procedure for performing these checks shall be submitted to the Executive Officer prior to the start of production. Within 60 days of its receipt the Executive Officer may require revisions to the proposal.

(b) Steady State Emissions Test

The vehicle engine shall be adjusted to the manufacturer's specifications for delivery to the customer prior to the steady-state emissions test. This test shall consist of a determination of HC and CO exhaust concentrations with the engine operating in a normal idle condition. All tests, including those of control limit test vehicles, shall be conducted as follows:

(1) Vehicles shall be tested in the normal "warmed-up" operating temperature range, i.e., after the choke is fully open and the engine is at curb idle speed, but before thermal override devices are actuated to prevent overheating. The test may be performed in any transmission gear; however the same gear shall be used for control limit test vehicles and production vehicles. For each engine family, the idle test may be performed without AIR provided that the control limit vehicles are tested both with and without AIR. The requirements of section B.(3)(g) must be met with AIR.

The control limit test vehicles and all production vehicles should be warmed-up and tested in the same manner.

(2) The sampling probes of the analytical system shall be inserted into the exhaust outlets far enough to avoid dilution with the outside air. Where this is not possible, a tailpipe extension shall be used.

(3) A vehicle which fails a steady-state emissions test shall be retested or repaired and shall pass on retest prior to sale.

2. Evaluation

Any vehicle tested by the steady-state emissions test showing emissions less than the control limits established for its engine family or subgroup and which had previously passed the functional tests will be considered to be in compliance with the inspection test requirements.

3. Control Limits

The control limits for each engine family or subgroup at the start of a model year will be determined as follows:

(a) Measure the emissions from the first 100 vehicles of each engine family or subgroup tested by the steady-state assembly-line inspection test.

(b) Determine the mean emission level and standard deviation for each pollutant (HC and CO).

(c) The control limit for each pollutant is the sum of the mean plus two times the standard deviation for that pollutant.

(d) Until the first control limits are established the manufacturer shall use temporary control limits based on the first ten tests. These ten vehicles are deemed to meet the control limits so established.

(3) A vehicle which fails a steady-state emissions test shall be retested or repaired and shall pass on retest prior to sale.

2. Evaluation

Any vehicle tested by the steady-state emissions test showing emissions less than the control limits established for its engine family or subgroup and which had previously passed the functional tests will be considered to be in compliance with the inspection test requirements.

3. Control Limits

The control limits for each engine family or subgroup at the start of a model year will be determined as follows:

(a) Measure the emissions from the first 100 vehicles of each engine family or subgroup tested by the steady-state assembly-line inspection test.

(b) Determine the mean emission level and standard deviation for each pollutant (HC and CO).

(c) The control limit for each pollutant is the sum of the mean plus two times the standard deviation for that pollutant.

(d) Until the first control limits are established the manufacturer shall use temporary control limits based on the first ten tests. These ten vehicles are deemed to meet the control limits so established.

(e) (i) For control systems that do not use catalytic converters - If the HC control limit value is determined in subparagraph (c) is less than 100 ppm, the HC control limit value may be increased by up to 50 ppm, not to exceed 100 ppm. If the CO control limit determined in subparagraph (c) is less than 1.0 percent, the CO control limit may be increased by up to 0.5 percent, not to exceed 1.0 percent.

(ii) For control systems that use catalytic converters - If the HC control limit value determined in subparagraph (c) is less than 50 ppm, the control limit value may be increased by up to 30 ppm, not to exceed 50 ppm.

If the CO control limit determined in subparagraph (c) is less than 0.5 percent, the CO control limit may be increased by up to 0.3 percent, not to exceed 0.5 percent.

(f) Idle control limit values may be rounded to the nearest 10 ppm HC and 0.1 percent CO in conformance to ASTM E29-67 except where this would result in a zero value.

(g) The maximum allowable steady-state control limits for HC and CO are those values used as the idle mode standard shown in Section 2176, Title 13 of the California Administrative Code for the ~~1980~~ 1981 model-year. An exemption to this requirement will be granted providing the manufacturer submits emission data with each quarterly report listed in one of the options below:

(1) Submit with each quarterly assembly-line report HC and CO emission values measured at engine idle speed for each quality audit vehicle tested and the computed mean and standard deviation of HC and CO emission results for the total number of vehicles tested, by engine family. Measurements of HC and CO shall be conducted immediately following completion of the dynamometer run and vehicles shall be in a state described under B.1 (b) (1) above. If less than 30 vehicles were quality audit tested during the reporting quarter the computation of the means and standards deviation are not required.

(2) Submit quarterly HC and CO emission values measured at engine idle speed for a minimum of 30 vehicles in the engine family or sub-group immediately after these vehicles have complied with the assembly-line inspection procedures and have either been run-in a distance of 50 miles (on the road or dynamometer) or after other appropriate engine break-in has been performed and the engine is operating at a fully warmed-up condition as described in B.1 (b) (1) above. In addition to emission results of individual vehicles, the mean and standard deviation shall be computed and submitted.

(3) The manufacturer may propose other methods to achieve results equivalent to the two options above. These emission data shall be obtained from stabilized vehicles which have emission control systems with no defects and are properly adjusted to manufacturers specifications.

(h) Control limits with AIR operating shall be calculated and reported for information purposes for those engine families that are tested without AIR in operation.

(1) Submit with each quarterly assembly-line report HC and CO emission values measured at engine idle speed for each quality audit vehicle tested and the computed mean and standard deviation of HC and CO emission results for the total number of vehicles tested, by engine family. Measurements of HC and CO shall be conducted immediately following completion of the dynamometer run and vehicles shall be in a state described under B.1 (b) (1) above. If less than 30 vehicles were quality audit tested during the reporting quarter the computation of the means and standards deviation are not required.

(2) Submit quarterly HC and CO emission values measured at engine idle speed for a minimum of 30 vehicles in the engine family or sub-group immediately after these vehicles have complied with the assembly-line inspection procedures and have either been run-in a distance of 50 miles (on the road or dynamometer) or after other appropriate engine break-in has been performed and the engine is operating at a fully warmed-up condition as described in B.1 (b) (1) above. In addition to emission results of individual vehicles, the mean and standard deviation shall be computed and submitted.

(3) The manufacturer may propose other methods to achieve results equivalent to the two options above. These emission data shall be obtained from stabilized vehicles which have emission control systems with no defects and are properly adjusted to manufacturers specifications.

(h) Control limits with AIR operating shall be calculated and reported for information purposes for those engine families that are tested without AIR in operation.

Control limit values shall be recalculated for each production quarter based on the measured emissions from at least 100 vehicles produced during the last half of the preceding quarter of production for each engine family or subgroup tested by the steady-state emissions test. When production levels do not permit compliance with the above, data from vehicles produced during the first half of the preceding quarter may be used. If the quarterly production of any engine family is less than 100 vehicles, the manufacturer shall use the test results from all vehicles produced during that quarter in determining the control limit values for the next quarter.

The Executive Officer shall be notified within one week if control limit values are recalculated following running changes which affect idle emissions levels. The new control limit values and the date they first went into effect shall be part of the notification.

All testing, reports, evaluations, etc. shall be by engine family except when the Executive Officer has approved a breakdown by subgroups (e.g., different carburetors, engine displacements, control systems, transmissions, and inertia weights), by assembly plant, or both.

Note: Data from any vehicle indicating gross engine malfunction, and/or failure or disconnection of any emission control component, shall be excluded from that used for generating control limits. Retest data on vehicles exceeding the control limits shall not be used in determining control limits for subsequent quarters.

4. Reports

Reports shall be submitted to the Air Resources Board within 45 calendar days of the end of each calendar quarter and within 45 calendar days of the end of the manufacturer's model production year. Results for two different model years shall not be combined statistically.

The report shall include:

(a) The temporary quarterly control limit values obtained for the first quarter of production.

(b) The mean and the standard deviation of the steady-state emissions tests used to determine the quarterly control limits.

(c) The steady-state control limit values for the next quarter's production.

(d) For each engine family or sub-group, the number and percentage of vehicles for each assembly plant:

(1) failing the first test

(2) repaired or adjusted.

All HC values should be stated as hexane equivalents for NDIR measurement and ppm carbon if a flame ionization detector is used. The hexane equivalent conversion value shall be supplied for each different model of flame ionization detector used and for each engine family.

C. Quality Audit Test Procedures

1. Standards and Test Procedures

The emission standards and the exhaust sampling and analytical procedures shall be those described in the "California Exhaust

4. Reports

Reports shall be submitted to the Air Resources Board within 45 calendar days of the end of each calendar quarter and within 45 calendar days of the end of the manufacturer's model production year. Results for two different model years shall not be combined statistically.

The report shall include:

(a) The temporary quarterly control limit values obtained for the first quarter of production.

(b) The mean and the standard deviation of the steady-state emissions tests used to determine the quarterly control limits.

(c) The steady-state control limit values for the next quarter's production.

(d) For each engine family or sub-group, the number and percentage of vehicles for each assembly plant:

(1) failing the first test

(2) repaired or adjusted.

All HC values should be stated as hexane equivalents for NDIR measurement and ppm carbon if a flame ionization detector is used. The hexane equivalent conversion value shall be supplied for each different model of flame ionization detector used and for each engine family.

C. Quality Audit Test Procedures

1. Standards and Test Procedures

The emission standards and the exhaust sampling and analytical procedures shall be those described in the "California Exhaust

Emission Standards and Test Procedures for ~~1980~~ 1981 Model Passenger Cars, Light-Duty Trucks and Medium-Duty Vehicles" applicable to vehicles tested for exhaust emissions only, with the following exceptions or additions:

(a) After the inspection tests, no emissions tests may be performed on a quality-audit vehicle prior to the first quality audit test, except where such tests are run on all vehicles manufactured for sale in California.

(b) The vehicle shall begin the test sequence as received from the inspection test, except for mileage accumulation or engine run-in. The schedule for mileage accumulation or engine run-in and any changes to the schedule must be submitted to the Executive Officer with each quarterly report. This schedule must be adhered to for all quality audit testing within an engine family and subgroup or engine family and assembly plant as appropriate.

(c) A new carbon canister may be installed on the vehicle at the start of the test sequence. The test sequence shall consist of one Urban Dynamometer Driving Schedule (UDDS) test procedure, followed by a cold-soak and CVS test. The Federal test procedure requirement, consisting of heating the fuel before the CVS test, is to be omitted. The manufacturer may request permission to use an alternate preconditioning procedure provided the manufacturer demonstrates that it will not affect the loading of the carbon canister when compared with the UDDS.

(d) Except as provided in paragraph C.1.(f) below, no vehicle selected for quality audit testing shall be repaired or adjusted after passing the inspection test except for a vehicle that: (1) is not testable, e.g. cannot be started, transmission or brakes lock-up, (2) is not reasonably operative, e.g. some transmission gears not functioning, (3) is unsafe to test, or (4) would be damaged by testing.

Each adjustment or repair performed on a vehicle prior to each test shall be included in the regular quarterly reports. The vehicle condition and symptoms and reason(s) for each repair or adjustment shall also be listed.

~~(d)~~ (e) If a vehicle is shipped to a remote facility for quality audit testing, correction of damage or maladjustment, which ~~may reasonably~~ be is found to have resulted from shipment of the vehicle, is permitted only after the initial test of the vehicle, except as provided in paragraph (d) above. ~~for compelling reasons. Compelling reasons are that the vehicle is not testable, or is not reasonable operative, or is not safe to drive, or that damage to the vehicle would be likely if the vehicle were tested.~~

All adjustments or repairs performed on vehicles prior to each test

(d) Except as provided in paragraph C.1.(f) below, no vehicle selected for quality audit testing shall be repaired or adjusted after passing the inspection test except for a vehicle that: (1) is not testable, e.g. cannot be started, transmission or brakes lock-up, (2) is not reasonably operative, e.g. some transmission gears not functioning, (3) is unsafe to test, or (4) would be damaged by testing.

Each adjustment or repair performed on a vehicle prior to each test shall be included in the regular quarterly reports. The vehicle condition and symptoms and reason(s) for each repair or adjustment shall also be listed.

~~(d)~~ (e) If a vehicle is shipped to a remote facility for quality audit testing, correction of damage or maladjustment, which ~~may reasonably~~ be is found to have resulted from shipment of the vehicle, is permitted only after the initial test of the vehicle, except as provided in paragraph (d) above. ~~for compelling reasons. Compelling reasons are that the vehicle is not testable, or is not reasonable operative, or is not safe to drive, or that damage to the vehicle would be likely if the vehicle were tested.~~

All adjustments or repairs performed on vehicles prior to each test

shall be reported to the Executive Officer by inclusion in the quarterly report. The vehicle condition and symptoms and reason(s) for each repair or adjustment shall also be listed. In the event a retest is performed application may be made to the Executive Officer for permission to substitute the after-repair test results for the original test results. The Executive Officer will either affirm or deny the application. ~~within ten working days.~~ When requested by the manufacturer, no more than 10 days after the production quarter, response from the Executive Officer will be within 10 working days.

(f) If a vehicle is shipped to a remote facility for quality audit testing, no pre-delivery type inspection, adjustment or repair of vehicles selected for quality audit is allowed except as follows: if subsequent to shipping from the assembly-line, the manufacturer performs the particular inspection and correction of damage or maladjustment at designated preparation facility locations for all vehicles produced and the manufacturer's written inspection instructions are approved by the Executive Officer, then these specific inspections and corrections will be allowed prior to testing quality audit vehicles.

~~However, if 100% of the manufacturer's production is given a particular correction of damage or maladjustment by the manufacturer's~~

~~own-personnel-subsequent-to-consignment-for-shipping-from-that manufacturer's-assembly-line,-that-same-correction-of-damage or-maladjustment-will-be-allowed-prior-to-initial-testing-to-the specific-vehicles-randomly-selected-for-testing,-provided-the manufacturer's-written-instructions-are-submitted-to-the-Executive Officer.~~

(g) If the emission test results of a vehicle are determined to be invalid by the manufacturer, the vehicle must be retested. Emission results from all tests shall be reported. A detailed report on the reasons for each invalidated test shall be included in the quarterly report.

2. Vehicle Sample Selection

The vehicle manufacturer shall randomly select vehicles within each engine family for quality audit testing. Each selected vehicle for quality audit testing must pass the inspection test, be equipped with emission control systems certified by the ARB, and be representative of the manufacturer's California sales. The procedure for randomly selecting vehicles must be submitted to the Executive Officer prior to production.

A continuous sample rate shall be chosen by the manufacturer to provide a sample which is representative of the total production. The manufacturer shall select a sample rate which he or she determines will be satisfactory for use by the Air Resources Board in determining the number of vehicles in the entire population of a particular engine

~~own personnel subsequent to consignment for shipping from that manufacturer's assembly line, that same correction of damage or maladjustment will be allowed prior to initial testing to the specific vehicles randomly selected for testing, provided the manufacturer's written instructions are submitted to the Executive Officer.~~

(g) If the emission test results of a vehicle are determined to be invalid by the manufacturer, the vehicle must be retested. Emission results from all tests shall be reported. A detailed report on the reasons for each invalidated test shall be included in the quarterly report.

2. Vehicle Sample Selection

The vehicle manufacturer shall randomly select vehicles within each engine family for quality audit testing. Each selected vehicle for quality audit testing must pass the inspection test, be equipped with emission control systems certified by the ARB, and be representative of the manufacturer's California sales. The procedure for randomly selecting vehicles must be submitted to the Executive Officer prior to production.

A continuous sample rate shall be chosen by the manufacturer to provide a sample which is representative of the total production. The manufacturer shall select a sample rate which he or she determines will be satisfactory for use by the Air Resources Board in determining the number of vehicles in the entire population of a particular engine

family which do not meet Board established emission standards by extrapolation from the percentage of the sample not meeting the standards. The results from the sample may be extrapolated to the entire population subject to the provisions relating to vehicle exclusion contained in Paragraph 3 below. The sample rate so chosen shall not be less than 2.0%. The manufacturer shall notify the Executive Officer of any changes to the sample rate. The date of such change shall be reported in accordance with Paragraph 4 below.

Four wheel drive vehicles which can be manually shifted to a two wheel drive mode will be tested in the normal on-highway two wheel drive mode of operation. If full time four wheel drive vehicles are selected, substitutions may be made with comparable two wheel drive vehicles of the same engine family. If comparable two wheel drive vehicles are not available, selected full time four wheel drive vehicles will be tested after having the front drive wheels temporarily disengaged or the front end of the vehicle elevated.

The Executive Officer may, upon notice to the manufacturer, require the sample rate to be increased to a maximum of ten percent of production (not to exceed 30 additional vehicles) of the calendar quarterly production of any engine family by invoking Section 2110, Chapter 3, Title 13 of the California Administrative Code.

3. Evaluation

The evaluation shall be performed on sample sizes containing 30 or more vehicles. If a sample size for a particular production quarter is less than 30 vehicles, the data from that quarter shall

be combined with the data from each successive quarter until at least 30 vehicles have been quality-audit tested. If the sample size for the last quarter's production does not contain at least 30 vehicles, the data from the last quarter shall be combined with each preceding quarter until the sample size contains at least 30 vehicles. For an engine family which contains both light-duty trucks and medium-duty vehicles, all references in this test procedure to engine family shall mean light-duty truck subgroup or medium-duty vehicle subgroup.

Based upon additional information submitted by a manufacturer, the Executive Officer may allow rejection of any data from vehicles if they are considered to be not representative of production.

For each production quarter if 30 or more vehicles are tested, the ARB shall consider that probable cause exists for finding a violation by any engine family if the average emissions of any pollutant, after multiplying the emission data of each vehicle by the appropriate certification deterioration factor, ~~and the assigned methane content correction factor (for hydrocarbons only),~~ exceed the applicable ~~1980~~ 1981 exhaust emission standards, when rounded to the same number of significant digits as the standard.

The Executive Officer may invoke Section 2109, Chapter 3, Title 13 of the California Administrative Code if probable cause is found for a full or combined production quarter. The Executive Officer may invoke Section 2110, Chapter 3, Title 13 of the California

be combined with the data from each successive quarter until at least 30 vehicles have been quality-audit tested. If the sample size for the last quarter's production does not contain at least 30 vehicles, the data from the last quarter shall be combined with each preceding quarter until the sample size contains at least 30 vehicles. For an engine family which contains both light-duty trucks and medium-duty vehicles, all references in this test procedure to engine family shall mean light-duty truck subgroup or medium-duty vehicle subgroup.

Based upon additional information submitted by a manufacturer, the Executive Officer may allow rejection of any data from vehicles if they are considered to be not representative of production.

For each production quarter if 30 or more vehicles are tested, the ARB shall consider that probable cause exists for finding a violation by any engine family if the average emissions of any pollutant, after multiplying the emission data of each vehicle by the appropriate certification deterioration factor, ~~and the assigned methane content correction factor (for hydrocarbons only),~~ exceed the applicable ~~1980~~ 1981 exhaust emission standards, when rounded to the same number of significant digits as the standard.

The Executive Officer may invoke Section 2109, Chapter 3, Title 13 of the California Administrative Code if probable cause is found for a full or combined production quarter. The Executive Officer may invoke Section 2110, Chapter 3, Title 13 of the California

Administrative Code if probable cause is found for a short start-up production period (less than a full calendar quarter), for the first thirty vehicles quality audit tested during any production quarter or from the start of production, or for vehicles evaluated in accordance with the monthly evalution required by paragraph 4 below. In addition, the ARB may seek statutory penalties pursuant to Sections 43211 and 43212 of the California Health and Safety Code at the end of each full or combined calendar quarter of production.

If the Executive Officer invokes Section 2109 or 2110, an evaluation will be made on vehicles produced subsequent to the invocation of a plan adopted pursuant to Section 2109 or 2110 as long as the sample size contains at least 30 vehicles.

If more than 1.0 percent (at least two vehicles) of the sample within an engine family has projected emissions which exceed the applicable standards by more than 2.33 standard deviations at the time of any evaluation of that family's average emissions, the manufacturer shall report such fact to the Executive Officer within 10 working days. Within 30 working days the manufacturer shall submit: (a) an analysis of the projected average emissions for each engine code/transmission type/inertia weight combination within that family; (b) an engineering evaluation of the cause of failure for each vehicle which exceeded the standard by more than 2.33 standard deviations; (c) the manufacturer's opinion as to the nature of the problem; and (d) any corrective action proposed by the manufacturer.

The Executive Officer shall review the report, and may require that the proposed corrective action be taken. If, after review of the report, the Executive Officer finds the proposed corrective action inadequate, the Executive Officer may invoke Section 2109 or 2110, as appropriate.

Non-Methane or Total Hydrocarbon Measurements
~~Methane-Content-Correction-Factor-(MCCF)~~

1. For an engine family certified to the non-methane hydrocarbon standard ~~(0.39)-either:-the-measured-total-hydrocarbon-value shall-be-multiplied-by-the-non--methane-deterioration-factor (DF)-and-by-a-MCCF-of-0.89-for-passenger-cars-and-1.0-for-trucks (or-alternate-value-approved-by-the-ARB).-Or:~~ the manufacturer shall may measure the non-methane hydrocarbon content which shall be multiplied by the non-methane deterioration factor (DF).

2. For an engine family certified to the total hydrocarbon standard, ~~(0.41)~~, the measured total hydrocarbon value shall be multiplied by the total hydrocarbon deterioration factor (DF). ~~and-by-the-MCCF-of-0.89-for-passenger-cars-and 1.0-for-trucks-(or-other-alternate-values-approved-by-the Executive-Officer.)~~

4. Reports

Each vehicle manufacturer shall submit a report to the Air Resources Board within 45 calendar days after the end of each calender quarter and 45 calendar days after the end of the production year. More

The Executive Officer shall review the report, and may require that the proposed corrective action be taken. If, after review of the report, the Executive Officer finds the proposed corrective action inadequate, the Executive Officer may invoke Section 2109 or 2110, as appropriate.

Non-Methane or Total Hydrocarbon Measurements
~~Methane-Content-Correction-Factor-(MCCF)~~

1. For an engine family certified to the non-methane hydrocarbon standard ~~(0.39)-either:-the-measured-total-hydrocarbon-value shall-be-multiplied-by-the-non--methane-deterioration-factor (DF)-and-by-a-MCCF-of-0.89-for-passenger-cars-and-1.0-for-trucks (or-alternate-value-approved-by-the-ARB).--Or:~~ the manufacturer shall ~~may~~ measure the non-methane hydrocarbon content which shall be multiplied by the non-methane deterioration factor (DF).

2. For an engine family certified to the total hydrocarbon standard, ~~(0.41)~~, the measured total hydrocarbon value shall be multiplied by the total hydrocarbon deterioration factor (DF). ~~and-by-the-MCCF-of-0.89-for-passenger-cars-and 1.0-for-trucks-(or-other-alternate-values-approved-by-the Executive-Officer.)~~

4. Reports

Each vehicle manufacturer shall submit a report to the Air Resources Board within 45 calendar days after the end of each calender quarter and 45 calendar days after the end of the production year. More

frequent reports may be required if the Executive Officer invokes Section 2109 or 2110, Chapter 3, Title 13 of the California Administrative Code. Each vehicle manufacturer shall review the test results of the first 30 test vehicles of each engine family for each calendar quarter of production or from the start of production, and the quarter's cumulative test results of each engine family at the end of each month. If the sample size is 30 or more vehicles and either of the two conditions specified in the Evaluation Section are met, the Executive Officer shall be notified within 10 working days.

The quarterly report shall include the following:

(a) The total production and sample size for each engine family.

(b) A description of each test vehicle ((i.e., data of test, engine family, engine size, vehicle identification number, fuel system (e.g., number of venturi, fuel injection, etc.), transmission type, test ~~inertia~~ weight used, dynamometer power absorber setting in horsepower, engine code or calibration number and test location)).

(c) The CVS exhaust emission data ~~(corrected for methane, if applicable)~~ and carbon dioxide data for each test vehicle. The data reported shall be rounded to one significant figure beyond the number of significant figures in the applicable standard. Deterioration

factors shall be stated, then applied to the data. The data reported after the deterioration factors are applied shall be rounded using the "rounding off method" specified in ASTM: E29-67 to the number of places to the right of the decimal point as follows for all vehicles:

	HC	CO	NOx	CO_2
~~Passenger cars~~	.XXX	.XX	.XX	.X
~~Trucks~~	~~.XX~~	~~.X~~		

(d) The retest emissions data as described in paragraph (c) above for any vehicles failing the initial test, and description of the corrective measures taken including specific components replaced or adjusted.

(e) A statistical analysis of the quality-audit test results for each engine family stating:

(1) Number of vehicles tested.

(2) Average emissions and standard deviation of the sample for hydrocarbons ~~(corrected for methane, if applicable)~~, carbon monoxide and oxides of nitrogen both before and after applying deterioration factors. In the latter case, the individual test points shall be multiplied by deterioration factors prior to computing the average and standard deviation. The average emissions and standard deviation of the sample for carbon dioxide shall also be listed.

factors shall be stated, then applied to the data. The data reported after the deterioration factors are applied shall be rounded using the "rounding off method" specified in ASTM: E29-67 to the number of places to the right of the decimal point as follows for all vehicles:

	HC	CO	NOx	CO_2
~~Passenger-cars~~	.XXX	.XX	.XX	.X
~~Trucks~~	~~.XX~~	~~.X~~		

(d) The retest emissions data as described in paragraph (c) above for any vehicles failing the initial test, and description of the corrective measures taken including specific components replaced or adjusted.

(e) A statistical analysis of the quality-audit test results for each engine family stating:

(1) Number of vehicles tested.

(2) Average emissions and standard deviation of the sample for hydrocarbons ~~(corrected for methane, if applicable)~~, carbon monoxide and oxides of nitrogen both before and after applying deterioration factors. In the latter case, the individual test points shall be multiplied by deterioration factors prior to computing the average and standard deviation. The average emissions and standard deviation of the sample for carbon dioxide shall also be listed.

(3) The applicable exhaust emission standards to be met, listing specific options selected and designating when 100,000 mile standards apply and where non-methane or total hydrocarbon standards apply.

~~(f) Since the manufacturer has the option of certifying vehicles with either non-methane or total hydrocarbon instrumentation, the specific method used for quality audit testing shall be indicated for each engine family.~~

(f) Every aborted test and reason for abort shall be reported.

(g) If both four-wheel and two-wheel drive vehicles are included in a light duty truck engine family under 4,000 pounds inertia weight, then quality audit test data from four-wheel drive vehicles shall be distinguished from and summarized separately from two-wheel drive vehicles.

(h) Control limits with AIR operating shall be calculated and reported for information purposes for those engine families that are tested without AIR in operation.

(i) The final report shall include the date of the end of the manufacturer's model production year for each engine family.

5. Special Requirements for Low Production Vehicle Manufacturers.

The following requirements apply only to those vehicle manufacturers who were granted relief, by the Executive Officer, under Title 13, California Administrative Code (C.A.C.) Section 1960.2 Special Standards for 1980 and 1981 Model Passenger Cars.

The requirements listed below are to be followed as supplemental to and when contrary to other requirements specified in part "C. Quality Audit Test Procedures," Section "3. Evaluation" and "4. Reports." These requirements are listed to implement, define and clarify the Board requirements of C.A.C. Section 1960.2:

a. Additional Reporting Requirements

(1) NOx Emissions

The cumulative average of oxides of nitrogen (NOx) emissions from the entire quality audit passenger car line shall be reported both before and after applying deterioration factors for:

(a) All 1981 model cars tested during each calendar quarter.

(b) All 1981 model cars tested to date by the end of each calendar quarter.

5. Special Requirements for Low Production Vehicle Manufacturers.

The following requirements apply only to those vehicle manufacturers who were granted relief, by the Executive Officer, under Title 13, California Administrative Code (C.A.C.) Section 1960.2 Special Standards for 1980 and 1981 Model Passenger Cars.

The requirements listed below are to be followed as supplemental to and when contrary to other requirements specified in part "C. Quality Audit Test Procedures," Section "3. Evaluation" and "4. Reports." These requirements are listed to implement, define and clarify the Board requirements of C.A.C. Section 1960.2:

a. Additional Reporting Requirements

(1) NOx Emissions

The cumulative average of oxides of nitrogen (NOx) emissions from the entire quality audit passenger car line shall be reported both before and after applying deterioration factors for:

(a) All 1981 model cars tested during each calendar quarter.

(b) All 1981 model cars tested to date by the end of each calendar quarter.

(c) All 1980 and 1981 model cars tested to date by the end of each calendar quarter.

(d) All 1980 and 1981 model cars tested to date by December 31, 1980, by June 30, 1981 and by December 31, 1981.

(2) Subgroups

The NOx emission results shall be averaged and reported by engine family subgroup in each regular quarterly assembly-line report.

b. Semi-Annual Evaluations

Joint ARB - manufacturer evaluations will be made each six months to determine compliance with the 1.0 gm/mi NOx production level based on accumulated test results from all 1980 and 1981 cars tested. The first evaluation will be made based on averaged NOx test data accumulated through December 31, 1980. Subsequent evaluations will be made for data accumulated through June 30, 1981 and also for data accumulated through the end of the 1981 model year production respectively.

If the NOx value exceeds the 1.0 gm/mi level, but the manufacturer shows that unanticipated technical problems caused the 1.0 gm/mi NOx production average to be

exceeded, then appropriate relief will be made available. The relief will be made provided the manufacturer shows reasonable effort was made and will continue to be made towards meeting the 1.0 gm/mi level for future production periods. This includes incorporating into production improved technology as soon as it becomes available.

After the evaluation, the Executive Officer can invoke Section 2109, Title 13 of the California Administrative Code if accumulated results exceed 1.0 gm/mi NOx and the manufacture has not taken appropriate corrective action.

c. Deterioration Factors

For 1981 model passenger cars, deterioration factors, which are more representative of cars to be produced, than those obtained with prototype cars during certification tests, shall be determined by the Executive Officer. In establishing the deterioration factors, certification and engineering data for similar vehicles will be considered provided the manufacturer shows these data to be more representative of car configurations and emission control systems to be produced.

exceeded, then appropriate relief will be made available. The relief will be made provided the manufacturer shows reasonable effort was made and will continue to be made towards meeting the 1.0 gm/mi level for future production periods. This includes incorporating into production improved technology as soon as it becomes available.

After the evaluation, the Executive Officer can invoke Section 2109, Title 13 of the California Administrative Code if accumulated results exceed 1.0 gm/mi NOx and the manufacture has not taken appropriate corrective action.

c. Deterioration Factors

For 1981 model passenger cars, deterioration factors, which are more representative of cars to be produced, than those obtained with prototype cars during certification tests, shall be determined by the Executive Officer. In establishing the deterioration factors, certification and engineering data for similar vehicles will be considered provided the manufacturer shows these data to be more representative of car configurations and emission control systems to be produced.

The reports required by this paragraph and paragraph B.4. should be sent to:

Chief, Mobile Source Control Division
~~Vehicle Emissions Control Division~~
California Air Resources Board
9528 Telstar Avenue
El Monte, CA 91731

DEFINITIONS

The definitions in Section 1900 (b), Chapter 3, Title 13 of the California Administrative Code shall apply with the following additions:

1. Calendar Quarter is defined as those three month periods of time which start on the 1st days of January, April, July and October.
2. First or Last Calendar Quarter Production is defined as the calendar quarter in which the production of an engine family begins or ends.
3. End of Assembly-Line is defined as that place where the final inspection test or quality audit test is performed.
4. Assembly-Line Tests are those tests or inspections which are performed at the end of the assembly-line.
5. Assembly-Line Quality Audit Test is defined as the test performed on a minimum sample of 2.0% of the production vehicles for sale in California.
6. Assembly-Line Inspection Tests are those steady-state and functional tests performed on production vehicles for sale in California.
7. Functional Test is defined as a type of test or inspection which is performed on engines or vehicles to detect if the emission control system is operating properly.
8. Gross Engine Malfunction is defined as one yielding an emission value greater than the sum of the mean plus three (3) times the standard deviation. This definition shall apply only for determination of control limits.

State of California
AIR RESOURCES BOARD

Note: These procedures have been extracted from the "California Exhaust Emission Standards and Test Procedures for 1980 and Subsequent Model Passenger Cars, Light-Duty Trucks and Medium-Duty Vehicles," adopted November 23, 1976, as last amended April 10, 1979.

These procedures are printed in a style to indicate the adopted changes. New text is underlined and deleted portions are noted.

CALIFORNIA EXHAUST EMISSION STANDARDS AND TEST PROCEDURES FOR 1980 MODEL PASSENGER CARS, LIGHT-DUTY TRUCKS, AND MEDIUM-DUTY VEHICLES

Adopted: May 24, 1978
Amended: September 6, 1978
Amended: February 9, 1979
Amended: May 22, 1979
Amended: March 5, 1980

CALIFORNIA EXHAUST EMISSION STANDARDS AND TEST PROCEDURES FOR 1980 MODEL PASSENGER CARS, LIGHT-DUTY TRUCKS AND MEDIUM-DUTY VEHICLES

The provisions of Subparts A and B, Part 86, Title 40, Code of Federal Regulations, as they existed on April 15, 1978, are hereby adopted as the California Exhaust Emission Standards and Test Procedures for 1980 Model Passenger Cars, Light-Duty Trucks and Medium-Duty Vehicles, with the following exceptions and additions:

1. Applicability

   a. These test procedures are applicable to 1980 model passenger cars, light-duty trucks and medium-duty vehicles, except motorcycles. References to "light-duty trucks" in 40 CFR 86 shall apply both to "light-duty trucks" and "medium-duty vehicles" in these procedures.

   b. Any reference to vehicle sales throughout the United States shall mean vehicle sales in California.

   c. Regulations concerning EPA hearings, EPA inspections, specific language on the Certificate of Conformity, evaporative emissions, high-altitude vehicles and testing, and heavy-duty engines and vehicles shall not be applicable to these procedures, except where specifically noted.

2. Definitions

   a. "Administrator" means the Executive Officer of the Air Resources Board.

   b. "Certificate of Conformity" means Executive Order certifying vehicles for sale in California.

   c. "Certification" means certification as defined in Section 39018 of the Health and Safety Code.

   d. "Passenger car" means any motor vehicle designed primarily for transportation of persons and having a capacity of twelve persons or less.

e. "Heavy-duty engine" means an engine which is used to propel a heavy-duty vehicle.

f. "Heavy-duty vehicle" means any motor vehicle having a manufacturer's gross vehicle weight rating greater than 6,000 pounds, except passenger cars.

g. "Light-duty truck" means any motor vehicle, rated at 6,000 pounds gross vehicle weight or less, which is designed primarily for purposes of transportation of property or is a derivative of such a vehicle, or is available with special features enabling off-street or off-highway operation and use.

h. "Medium-duty vehicle" means any heavy-duty vehicle having a manufacturer's gross vehicle weight rating of 8500 pounds or less.

3. Test Procedures

Subparagraphs 3 (e), (f), (g), and (h) below do not apply to 1980 model light-duty trucks and medium-duty vehicles.

a. In order to demonstrate compliance with a non-methane hydrocarbon emission standard, hydrocarbon emissions shall be measured in accordance with the "California Non-Methane Hydrocarbon Test Procedures."

In the alternative, a manufacturer may correct the total measured hydrocarbons with a methane content correction factor. This factor shall be 0.89 for gasoline-fueled passenger cars equipped with an oxidation catalyst, and 1.00 for all other vehicles. If any manufacturer has reason to believe that the above methane content correction factors are not appropriate for its exhaust emission control system, the manufacturer may present evidence to the Executive Officer to support this claim. After examining the manufacturer's data, the Executive Officer may designate a methane content correction factor different from those stated above.

e. "Heavy-duty engine" means an engine which is used to propel a heavy-duty vehicle.

f. "Heavy-duty vehicle" means any motor vehicle having a manufacturer's gross vehicle weight rating greater than 6,000 pounds, except passenger cars.

g. "Light-duty truck" means any motor vehicle, rated at 6,000 pounds gross vehicle weight or less, which is designed primarily for purposes of transportation of property or is a derivative of such a vehicle, or is available with special features enabling off-street or off-highway operation and use.

h. "Medium-duty vehicle" means any heavy-duty vehicle having a manufacturer's gross vehicle weight rating of 8500 pounds or less.

3. Test Procedures

Subparagraphs 3 (e), (f), (g), and (h) below do not apply to 1980 model light-duty trucks and medium-duty vehicles.

a. In order to demonstrate compliance with a non-methane hydrocarbon emission standard, hydrocarbon emissions shall be measured in accordance with the "California Non-Methane Hydrocarbon Test Procedures."

In the alternative, a manufacturer may correct the total measured hydrocarbons with a methane content correction factor. This factor shall be 0.89 for gasoline-fueled passenger cars equipped with an oxidation catalyst, and 1.00 for all other vehicles. If any manufacturer has reason to believe that the above methane content correction factors are not appropriate for its exhaust emission control system, the manufacturer may present evidence to the Executive Officer to support this claim. After examining the manufacturer's data, the Executive Officer may designate a methane content correction factor different from those stated above.

b. Durability data submitted to subparagraph 86.078-24(f) may be from vehicles previously certified by EPA or ARB.

c. The requirements in subparagraph 86.078-28(a)(4)(i)(B) (durability vehicles must meet emission standards) refer, for each pollutant, to the highest of either the federal or California emission standards.

d. Notwithstanding changes in vehicle selection procedures, manufacturers may carry over data from 1979 model medium-duty vehicles to the 1980 model year.

e. In paragraph 86.079-21 (Application for certification), amend subparagraph (b)(5) to read:

(5) A statement of maintenance and procedures consistent with the restrictions imposed under subparagraph 86.078-25 (a)(1), necessary to assure that the vehicles (or engines) covered by a certificate of conformity in operation in normal use conform to the regulations, and a description of the program for training of personnel for such maintenance, and the equipment required.

f. In paragraph 86.078-25 (Maintenance):

1. Amend subparagraph (a)(1) to read as follows:

(1) Scheduled maintenance on the engine, emission control system and fuel system of durability vehicles shall, unless otherwise provided pursuant to subparagraph (a)(5)(iii), be restricted as set forth in the following provisions.

(i)(A) for gasoline-fueled vehicles, maintenance shall be restricted to the inspection, replacement, cleaning, adjustment and/or service of the following items at intervals no more frequent than indicated:

(1) Drive belts on engine accessories (tension adjustment only); (30,000 miles).

(2) Valve lash (15,000 miles).

(3) Spark plugs (30,000 miles).

(4) Air filter (30,000 miles).

(5) Exhaust gas sensor (30,000 miles): Provided that an audible and/or visible signal approved by the Executive Officer alerts the vehicle operator to the need for sensor maintenance.

(6) Choke (cleaning or lubrication only); (30,000 miles).

(7) In addition, adjustment of the engine idle speed (curb idle and fast idle), valve lash, and engine bolt torque may be performed once during the first 5,000 miles of scheduled driving, provided the manufacturer makes a satisfactory showing that the maintenance will be performed on vehicles in use.

(B) for diesel-powered vehicles, maintenance shall be restricted to the following items at intervals no more frequent than every 12,500 miles of scheduled driving, provided that no maintenance may be performed after 45,000 miles of scheduled driving:

(1) Adjust low idle speed.

(2) Adjust valve lash if required.

(3) Adjust injector timing.

(4) Adjust governor.

(5) Clean and service injector tips.

(6) Adjust drive belt tension on engine accessories.

(7) Check engine bolt torque and tighten as required.

(ii) Change of engine and transmission oil, change or service of oil filter and, for diesel-powered vehicles only, change or service of fuel filter and air filter, will be allowed at the mileage intervals specified in the manufacturer's maintenance instructions.

(iii) Maintenance shall be conducted in a manner consistent with service instructions and specifications provided by the manufacturer for use by customer service personnel.

2. Delete subparagraph (a)(3) (Service of exhaust gas recirculation system).

3. Delete subparagraph (a)(4) (Service of catalytic converter).

(6) Choke (cleaning or lubrication only); (30,000 miles).

(7) In addition, adjustment of the engine idle speed (curb idle and fast idle), valve lash, and engine bolt torque may be performed once during the first 5,000 miles of scheduled driving, provided the manufacturer makes a satisfactory showing that the maintenance will be performed on vehicles in use.

(B) for diesel-powered vehicles, maintenance shall be restricted to the following items at intervals no more frequent than every 12,500 miles of scheduled driving, provided that no maintenance may be performed after 45,000 miles of scheduled driving:

(1) Adjust low idle speed.

(2) Adjust valve lash if required.

(3) Adjust injector timing.

(4) Adjust governor.

(5) Clean and service injector tips.

(6) Adjust drive belt tension on engine accessories.

(7) Check engine bolt torque and tighten as required.

(ii) Change of engine and transmission oil, change or service of oil filter and, for diesel-powered vehicles only, change or service of fuel filter and air filter, will be allowed at the mileage intervals specified in the manufacturer's maintenance instructions.

(iii) Maintenance shall be conducted in a manner consistent with service instructions and specifications provided by the manufacturer for use by customer service personnel.

2. Delete subparagraph (a)(3) (Service of exhaust gas recirculation system).

3. Delete subparagraph (a)(4) (Service of catalytic converter).

g. In paragraph 86.078-38 (Maintenance instructions):

1. Amend subparagraph (a) to read:

(a) The manufacturer shall furnish or cause to be furnished to the purchaser of each new motor vehicle (or motor vehicle engine) subject to the standards prescribed in paragraphs 86.078-8 through 86.078-11 as applicable, written instructions for the maintenance and use of the vehicle (or engine) by the purchaser as may be reasonable and necessary to assure the proper functioning of emission control systems in normal use. Such instructions shall be consistent with and not require maintenance in excess of the restrictions imposed under subparagraph 86.078-25(a)(1), except that the instructions may, subject to approval by the Administrator, require additional maintenance for vehicles operated under extreme conditions. In addition, subject to approval by the Administrator, the instructions may require inspections necessary to insure safe operation of the vehicle in use.

In addition to any maintenance which may be required pursuant to the preceeding paragraph, the instructions may also recommend such inspections, maintenance, and repair as may be reasonable and necessary for the proper functioning of the vehicle and its emission control systems. If the instructions recommend maintenance in addition to that which may be required pursuant to the preceeding paragraph, they shall distinguish clearly between required and recommended maintenance.

2. Amend subparagraph (c)(1) to read:

(1) Such instructions shall specify the performance of all scheduled maintenance performed by the manufacturer under subparagraph 86.078-25(a)(1).

If the instructions specify recommended maintenance as well as required maintenance, they shall distinguish clearly between the two.

3. Amend subparagraph (d) by adding a new subparagraph (3) to read:

(3) Such instructions shall specify the performance of all scheduled maintenance performed by the manufacturer under subparagraph 86.078-25(a)(1).

If the instructions specify recommended maintenance as well as required maintenance, they shall distinguish clearly between the two.

h. Amend subparagraph 86.078-39(a) (Submission of maintenance instructions) to read:

(a) The manufacturer shall provide to the Administrator, no later than the time of the submission required by paragraph 86.078-23, a copy of the maintenance instructions which the manufacturer proposes to supply to the ultimate purchaser in accordance with subparagraph 86.078-38(a). The Administrator will review such instructions to determine whether they are consistent with federal requirements, and to determine whether the instructions for required maintenance are consistent with the restrictions imposed under subparagraph 86.078-25(a)(1). The Administrator will notify the manufacturer of his determinations.

4. Standards

The following standards represent the maximum projected exhaust emissions for the useful life of the vehicle.

			Exhaust Emission Standards (gram per vehicle mile)		
Model Year	Vehicle Type (a)	Equivalent Inertia Weight (lbs.) (b)	Non-Methane Hydrocarbons(c)	Carbon Monoxide	Oxides of Nitrogen (NO_2)(d)
1980	PC	All	0.39 (0.41)	9.0	1.0
	PC(f)	All	0.39 (0.41)	9.0	1.5
	LDT	0-3999	0.39 (0.41)	9.0	1.5
	LDT (4WD)	0-3999	0.39 (0.41)	9.0	2.0
	LDT	4000-5999	0.50 (0.50)	9.0	2.0
	MDV	All	0.9 (0.9)	17	2.3

			100,000 Mile Exhaust Emission Standards (grams per vehicle mile)		
Model Year	Vehicle Type (a)	Equivalent Inertia Weight (lbs.) (b)	Non-Methane Hydrocarbons(c)(e)	Carbon Monoxide	Oxides of Nitrogen (NO_2)(d)
1980	PC(Option 1)	All	0.39 (0.41)	9.0	1.5
	PC(Option 2)	All	0.46	10.6	1.5

h. Amend subparagraph 86.078-39(a) (Submission of maintenance instructions) to read:

(a) The manufacturer shall provide to the Administrator, no later than the time of the submission required by paragraph 86.078-23, a copy of the maintenance instructions which the manufacturer proposes to supply to the ultimate purchaser in accordance with subparagraph 86.078-38(a). The Administrator will review such instructions to determine whether they are consistent with federal requirements, and to determine whether the instructions for required maintenance are consistent with the restrictions imposed under subparagraph 86.078-25(a)(1). The Administrator will notify the manufacturer of his determinations.

4. Standards

The following standards represent the maximum projected exhaust emissions for the useful life of the vehicle.

			Exhaust Emission Standards (gram per vehicle mile)		
Model Year	Vehicle Type (a)	Equivalent Inertia Weight (lbs.) (b)	Non-Methane Hydrocarbons(c)	Carbon Monoxide	Oxides of Nitrogen (NO_2)(d)
1980	PC	All	0.39 (0.41)	9.0	1.0
	PC(f)	All	0.39 (0.41)	9.0	1.5
	LDT	0-3999	0.39 (0.41)	9.0	1.5
	LDT (4WD)	0-3999	0.39 (0.41)	9.0	2.0
	LDT	4000-5999	0.50 (0.50)	9.0	2.0
	MDV	All	0.9 (0.9)	17	2.3

			100,000 Mile Exhaust Emission Standards (grams per vehicle mile)		
Model Year	Vehicle Type (a)	Equivalent Inertia Weight (lbs.) (b)	Non-Methane Hydrocarbons(c)(e)	Carbon Monoxide	Oxides of Nitrogen (NO_2)(d)
1980	PC(Option 1)	All	0.39 (0.41)	9.0	1.5
	PC(Option 2)	All	0.46	10.6	1.5

(a) "PC" means passenger cars.
"LDT" means light-duty trucks.
"LDT (4WD)" means light duty trucks equipped with four wheel drive.
"MDV" means medium-duty vehicles.

(b) Equivalent inertia weights are determined under subparagraph 86.129-79(a).

(c) Hydrocarbon standards in parentheses apply to total hydrocarbons, or, for 1980 models only, to emissions corrected by a methane content correction factor.

(d) In addition, for passenger cars, the maximum projected emissions of oxides of nitrogen measured on the federal Highway Fuel Economy Test (HWFET; 40 CFR Part 600, Subpart B) shall be no greater than 1.33 times the applicable standard shown in the table. Both the projected emissions and the HWFET standard shall be rounded to the nearest 0.1 gm/mi before being compared.

(e) For vehicles from evaporative emissions families with projected 50,000 mile evaporative emissions values below 1.0 gm/test, an adjustment to the hydrocarbon exhaust emission standard may be granted by the Executive Officer. The adjusted standard will be calculated using the following formula:

$$HC_{ex} = .75\ (.185 - \frac{Di+3.3\ Hs}{29.4}) + HC_o$$

Where:

HC_{ex} = adjusted exhaust hydrocarbon standard
HC_o = unadjusted exhaust hydrocarbon standard
Di = diurnal evaporative emissions
Hs = hot soak evaporative emissions

(f) For vehicles certified to special standards authorized by Section 1960.2, Article 2, Subchapter 1, Chapter 3, Title 13, California Administrative Code.

5. Additional Requirements

Subparagraphs (5)(d) and (5)(e) below do not apply to 1980 model light-duty trucks and medium-duty vehicles.

a. A statement must be supplied that the production vehicles shall be in all material respects the same as those for which certification is granted.

b. If a gasoline-fueled vehicle manufacturer requires the use of unleaded fuel, a statement will be required that the engine and transmission combinations for which certification is requested are designed to operate satisfactorily on a gasoline having a research octane number not greater than 91.

c. Labeling required pursuant to paragraph 86.079-35 and Section 1965, Chapter 3, Title 13 of the California Administrative Code shall conform with the requirements specified in the "California Motor Vehicle Tune-Up Label Specifications."

d. For gasoline-powered vehicles evidence shall be supplied that the air/fuel metering system or secondary air injection system is capable of providing sufficient oxygen to theoretically allow enough oxidation to attain the CO emission standard at barometric pressures equivalent to those expected at altitudes ranging from sea level to 6,000 feet elevation.

e. The mechanism for adjusting the idle air/fuel mixture, if any, shall be designed so that either:

   (i) the mixture adjustment mechanism is not visible, even with the air cleaner removed, and special tools and/or procedures are required to make adjustments; or

   (ii) in the alternative, the Executive Officer may, upon reasonable notice to the manufacturer, require that a certification test of a vehicle be conducted with the idle air/fuel mixture at any setting which the Executive Officer finds corresponds to settings likely to be encountered in actual use. The Executive Officer, in making this finding, shall consider the difficulty of making adjustments, damage to the carburetor in the event of any effort to make an improper adjustement, and the need to replace parts following the adjustment.

a. A statement must be supplied that the production vehicles shall be in all material respects the same as those for which certification is granted.

b. If a gasoline-fueled vehicle manufacturer requires the use of unleaded fuel, a statement will be required that the engine and transmission combinations for which certification is requested are designed to operate satisfactorily on a gasoline having a research octane number not greater than 91.

c. Labeling required pursuant to paragraph 86.079-35 and Section 1965, Chapter 3, Title 13 of the California Administrative Code shall conform with the requirements specified in the "California Motor Vehicle Tune-Up Label Specifications."

d. For gasoline-powered vehicles evidence shall be supplied that the air/fuel metering system or secondary air injection system is capable of providing sufficient oxygen to theoretically allow enough oxidation to attain the CO emission standard at barometric pressures equivalent to those expected at altitudes ranging from sea level to 6,000 feet elevation.

e. The mechanism for adjusting the idle air/fuel mixture, if any, shall be designed so that either:

(i) the mixture adjustment mechanism is not visible, even with the air cleaner removed, and special tools and/or procedures are required to make adjustments; or

(ii) in the alternative, the Executive Officer may, upon reasonable notice to the manufacturer, require that a certification test of a vehicle be conducted with the idle air/fuel mixture at any setting which the Executive Officer finds corresponds to settings likely to be encountered in actual use. The Executive Officer, in making this finding, shall consider the difficulty of making adjustments, damage to the carburetor in the event of any effort to make an improper adjustement, and the need to replace parts following the adjustment.

The manufacturer shall submit for approval by the Executive Officer his or her proposed method for compliance with this requirement in his or her preliminary application for certification.

f. For passenger cars:

(i) The exhaust emissions shall be measured from all exhaust emission data vehicles tested in accordance with the federal Highway Fuel Economy Test (HWFET; 40 CFR Part 600, Subpart B). The oxides of nitrogen emissions measured during such tests shall be multiplied by the oxides of nitrogen deterioration factor computed in accordance with paragraph 86.078-28, and then rounded and compared with the standard as set forth in paragraph 4 above. All data obtained pursuant to this paragraph shall be reported in accordance with procedures applicable to other exhaust emission data required pursuant to these procedures.

(ii) In the event that one or more of the manufacturer's emission data vehicles fail the HWFET standard listed in paragraph 4, the manufacturer may submit to the Executive Officer engineering data or other evidence showing that the system is capable of complying with the standard. If the Executive Officer finds, on the basis of an engineering evaluation, that the system can comply with the HWFET standard, he or she may accept the information supplied by the manufacturer in lieu of vehicle test data.

g. The manufacturer shall submit to the Executive Officer a statement that those vehicles for which certification is requested have driveability and performance characteristics which satisfy that manufacturer's customary driveability and performance requirements for vehicles sold in the United States. This statement shall be based on driveability data and other evidence showing compliance with the manufacturer's performance criteria. This statement shall be supplied with the manufacturer's final application for certification, and with all running changes for which emission testing is required.

If the Executive Officer has evidence to show that in-use vehicles demonstrate poor performance that could result in wide-spread tampering with the emission control systems, he or she may request all driveability data and other evidence used by the manufacturer to justify the performance statement.

6. Optional 100,000 Mile Certification Procedure

For 1980 model passenger cars, the alternate emission standards shown in paragraph (4) above shall apply to any engine family which meets all of the following additional requirements:

a. Each exhaust emission durability data vehicle shall be driven, with all emission control systems installed and operating, for 100,000 miles or such lesser distance as the Executive Officer may agree to as meeting the objectives of this procedure.

(i) The linear regression line for all pollutants shall be established by use of all required data from tests of the durability vehicle at every 5,000 mile interval from 5,000 to 100,000 miles. The requirements in subparagraph 86.078-28(a)(4)(i)(B)(durability vehicles must meet emissions standards) refer, for each pollutant, to the highest of either the federal 50,000 mile or California 100,000 mile emission standards.

(ii) Compliance with the hydrocarbon and carbon monoxide standards shall be determined as follows:

(a) For Option 1:

(A) the interpolated 4,000 and 50,000 mile points on the linear regression line in (i) shall not exceed the appropriate hydrocarbon and carbon monoxide standards, except as in (B) below.

(B) the linear regression line in (i) may exceed the standard provided that no data point exceeds the standard.

(C) the hydrocarbon and carbon monoxide data from the 4,000 mile test point of the emission data vehicle shall be multiplied by the deterioration factor computed by dividing the interpolated 50,000 mile point by the interpolated 4,000 mile point. These values shall not exceed the appropriate hydrocarbon and carbon monoxide standards.

If the Executive Officer has evidence to show that in-use vehicles demonstrate poor performance that could result in wide-spread tampering with the emission control systems, he or she may request all driveability data and other evidence used by the manufacturer to justify the performance statement.

6. Optional 100,000 Mile Certification Procedure

For 1980 model passenger cars, the alternate emission standards shown in paragraph (4) above shall apply to any engine family which meets all of the following additional requirements:

a. Each exhaust emission durability data vehicle shall be driven, with all emission control systems installed and operating, for 100,000 miles or such lesser distance as the Executive Officer may agree to as meeting the objectives of this procedure.

(i) The linear regression line for all pollutants shall be established by use of all required data from tests of the durability vehicle at every 5,000 mile interval from 5,000 to 100,000 miles. The requirements in subparagraph 86.078-28(a)(4)(i)(B)(durability vehicles must meet emissions standards) refer, for each pollutant, to the highest of either the federal 50,000 mile or California 100,000 mile emission standards.

(ii) Compliance with the hydrocarbon and carbon monoxide standards shall be determined as follows:

(a) For Option 1:

(A) the interpolated 4,000 and 50,000 mile points on the linear regression line in (i) shall not exceed the appropriate hydrocarbon and carbon monoxide standards, except as in (B) below.

(B) the linear regression line in (i) may exceed the standard provided that no data point exceeds the standard.

(C) the hydrocarbon and carbon monoxide data from the 4,000 mile test point of the emission data vehicle shall be multiplied by the deterioration factor computed by dividing the interpolated 50,000 mile point by the interpolated 4,000 mile point. These values shall not exceed the appropriate hydrocarbon and carbon monoxide standards.

(b) For Option 2:

(A) the interpolated 4,000 and 100,000 mile points on the linear regression line in (i) shall not exceed the appropriate hydrocarbon and carbon monoxide standards, except as in (B) below.

(B) the linear regression line in (i) may exceed the standard provided that no data point exceeds the standard.

(C) the hydrocarbon and carbon monoxide data from the 4,000 mile test point of the emission data vehicle shall be multiplied by the deterioration factor computed by dividing the interpolated 100,000 mile point by the interpolated 4,000 mile point. These values shall not exceed the appropriate hydrocarbon and carbon monoxide standards.

(iii) Compliance with the oxides of nitrogen standard for Options 1 and 2 shall be determined as follows:

(a) the interpolated 4,000 and 100,000 mile points on the linear regression line in (i) shall not exceed the appropriate 100,000 mile oxides of nitrogen standard except as in (b) below.

(b) the linear regression line in (i) may exceed the standard provided that no data point exceeds the standard.

(c) the oxides of nitrogen data from the 4,000 mile test point of the emission data vehicle shall be multiplied by the deterioration factor computed by dividing the interpolated 100,000 mile point by the interpolated 4,000 mile point. These values shall not exceed the appropriate 100,000 mile oxides of nitrogen standard.

All references in these test procedures except in subparagraph (ii)(a) to "useful life", 5 years, and 50,000 miles shall mean "total life", 10 years and 100,000 miles, respectively.

b. Only the following scheduled maintenance shall be allowed under subparagraph 86.078-25(a)(1)(i).

25(a)(1)(i)(A). Option 1. For gasoline or diesel-fueled vehicles, maintenance shall be restricted to the inspection, replacement, cleaning, adjustment and/or service of the following items at intervals no more frequent than indicated:

(1) Drive belt tension on engine accessories (30,000 miles).

(2) Valve lash (15,000 miles).

(3) Spark plugs (30,000 miles).

(4) Air filter (30,000 miles).

(5) Exhaust gas sensor (30,000 miles); Provided that an audible and/or visible signal approved by the Executive Officer alerts the vehicle operator to the need for sensor maintenance.

(6) Choke cleaning or lubrication only (30,000 miles).

(7) Idle speed (30,000 miles).

(8) Fuel filter (30,000 miles).

(9) Injection timing adjustment (30,000 miles).

25(a)(1)(i)(B). Option 2. For gasoline or diesel-fueled vehicles, maintenance shall be restricted to the inspection, replacement, cleaning, adjustment, and/or service of the following items at intervals no more frequent than indicated:

(1) Drive belt tension on engine accessories (30,000 miles).

(2) Valve lash (15,000 miles).

(3) Spark plugs (30,000 miles).

(4) Air filter (30,000 miles).

(5) Idle speed (30,000 miles).

(6) Fuel filter (30,000 miles).

(7) Injection timing adjustment (30,000 miles).

b. Only the following scheduled maintenance shall be allowed under subparagraph 86.078-25(a)(1)(i).

25(a)(1)(i)(A). Option 1. For gasoline or diesel-fueled vehicles, maintenance shall be restricted to the inspection, replacement, cleaning, adjustment and/or service of the following items at intervals no more frequent than indicated:

(1) Drive belt tension on engine accessories (30,000 miles).

(2) Valve lash (15,000 miles).

(3) Spark plugs (30,000 miles).

(4) Air filter (30,000 miles).

(5) Exhaust gas sensor (30,000 miles); Provided that an audible and/or visible signal approved by the Executive Officer alerts the vehicle operator to the need for sensor maintenance.

(6) Choke cleaning or lubrication only (30,000 miles).

(7) Idle speed (30,000 miles).

(8) Fuel filter (30,000 miles).

(9) Injection timing adjustment (30,000 miles).

25(a)(1)(i)(B). Option 2. For gasoline or diesel-fueled vehicles, maintenance shall be restricted to the inspection, replacement, cleaning, adjustment, and/or service of the following items at intervals no more frequent than indicated:

(1) Drive belt tension on engine accessories (30,000 miles).

(2) Valve lash (15,000 miles).

(3) Spark plugs (30,000 miles).

(4) Air filter (30,000 miles).

(5) Idle speed (30,000 miles).

(6) Fuel filter (30,000 miles).

(7) Injection timing adjustment (30,000 miles).

(iii) In addition, adjustment of the engine idle speed (curb idle and fast idle), valve lash, and engine bolt torque may be performed once during the first 5,000 miles of scheduled driving, provided the manufacturer makes a satisfactory showing that the maintenance will be performed on vehicles in use.

c. The manufacturer agrees to apply to vehicles certified under this paragraph the provisions of Section 43204 of the California Health and Safety Code for a period of ten years or 100,000 miles, whichever first occurs.

State of California
AIR RESOURCES BOARD

Note: These procedures are printed in a style to indicate the adopted changes. New text is underlined and deleted portions are noted.

CALIFORNIA EXHAUST EMISSION STANDARDS AND TEST PROCEDURES FOR 1981 AND SUBSEQUENT MODEL PASSENGER CARS, LIGHT-DUTY TRUCKS, AND MEDIUM-DUTY VEHICLES

Adopted: November 23, 1976
Adopted: December 14, 1976
Amended: May 26, 1977
Amended: June 8, 1977
Amended: June 22, 1977
Amended: September 20, 1977
Amended: January 15, 1978
Amended: March 1, 1978
Amended: April 10, 1978
Amended: May 24, 1978
Amended: February 9, 1979
Amended: May 22, 1979
Amended: March 5, 1980

CALIFORNIA EXHAUST EMISSION STANDARDS AND TEST PROCEDURES FOR 1981 AND SUBSEQUENT MODEL PASSENGER CARS, LIGHT-DUTY TRUCKS AND MEDIUM-DUTY VEHICLES

The provisions of Subparts A and B, Part 86, Title 40, Code of Federal Regulations, as they existed on April 15, 1978, are hereby adopted as the California Exhaust Emission Standards and Test Procedures for 1981 and Subsequent Model Passenger Cars, Light-Duty Trucks and Medium-Duty Vehicles, with the following exceptions and additions:

1. Applicability

   a. These test procedures are applicable to 1981 and subsequent model passenger cars, light-duty trucks and medium-duty vehicles, except motorcycles. References to "light-duty trucks" in 40 CFR 86 shall apply both to "light-duty trucks" and "medium-duty vehicles" in these procedures.

   b. Any reference to vehicle sales throughout the United States shall mean vehicle sales in California.

   c. Regulations concerning EPA hearings, EPA inspections, specific language on the Certificate of Conformity, evaporative emissions, high-altitude vehicles and testing, and heavy-duty engines and vehicles shall not be applicable to these procedures, except where specifically noted.

2. Definitions

   a. "Administrator" means the Executive Officer of the Air Resources Board.

   b. "Certificate of Conformity" means Executive Order certifying vehicles for sale in California.

   c. "Certification" means certification as defined in Section 39018 of the Health and Safety Code.

   d. "Passenger car" means any motor vehicle designed primarily for transportation of persons and having a capacity of twelve persons or less.

e. "Heavy-duty engine" means an engine which is used to propel a heavy-duty vehicle.

f. "Heavy-duty vehicle" means any motor vehicle having a manufacturer's gross vehicle weight rating greater than 6,000 pounds, except passenger cars.

g. "Light-duty truck" means any motor vehicle, rated at 6,000 pounds gross vehicle weight or less, which is designed primarily for purposes of transportation of property or is a derivative of such a vehicle, or is available with special features enabling off-street or off-highway operation and use.

h. "Medium-duty vehicle" means any heavy-duty vehicle having a manufacturer's gross vehicle weight rating of 8500 pounds or less.

3. Test Procedures

a. In order to demonstrate compliance with a non-methane hydrocarbon emission standard, hydrocarbon emissions shall be measured in accordance with the "California Non-Methane Hydrocarbon Test Procedures."

b. Durability data submitted pursuant to subparagraph 86.078-23(f) may be from vehicles previously certified by EPA or ARB.

c. The requirements in subparagraph 86.078-28(a)(4)(i)(B) (durability vehicles must meet emission standards) refer, for each pollutant, to the highest of either the federal or California emission standards.

d. In paragraph 86.079-21 (Application for certification), amend subparagraph (b)(5) to read:

(5) A statement of maintenance and procedures consistent with the restrictions imposed under subparagraph 86.078-25(a)(1), necessary to assure that the vehicles (or engines) covered by a certificate of conformity in operation in normal use conform to the regulations, and a description of the program for training of personnel for such maintenance, and the equipment required.

e. "Heavy-duty engine" means an engine which is used to propel a heavy-duty vehicle.

f. "Heavy-duty vehicle" means any motor vehicle having a manufacturer's gross vehicle weight rating greater than 6,000 pounds, except passenger cars.

g. "Light-duty truck" means any motor vehicle, rated at 6,000 pounds gross vehicle weight or less, which is designed primarily for purposes of transportation of property or is a derivative of such a vehicle, or is available with special features enabling off-street or off-highway operation and use.

h. "Medium-duty vehicle" means any heavy-duty vehicle having a manufacturer's gross vehicle weight rating of 8500 pounds or less.

3. Test Procedures

a. In order to demonstrate compliance with a non-methane hydrocarbon emission standard, hydrocarbon emissions shall be measured in accordance with the "California Non-Methane Hydrocarbon Test Procedures."

b. Durability data submitted pursuant to subparagraph 86.078-23(f) may be from vehicles previously certified by EPA or ARB.

c. The requirements in subparagraph 86.078-28(a)(4)(i)(B) (durability vehicles must meet emission standards) refer, for each pollutant, to the highest of either the federal or California emission standards.

d. In paragraph 86.079-21 (Application for certification), amend subparagraph (b)(5) to read:

(5) A statement of maintenance and procedures consistent with the restrictions imposed under subparagraph 86.078-25(a)(1), necessary to assure that the vehicles (or engines) covered by a certificate of conformity in operation in normal use conform to the regulations, and a description of the program for training of personnel for such maintenance, and the equipment required.

e. In paragraph 86.078-25 (Maintenance):

1. Amend subparagraph (a)(1) to read as follows:

(1) Scheduled maintenance on the engine, emission control system and fuel system of durability vehicles shall, unless otherwise provided pursuant to paragraph (a)(5)(iii), be restricted as set forth in the following provisions.

(i)(A) for gasoline-fueled vehicles, maintenance shall be restricted to the inspection, replacement, cleaning, adjustment and/or service of the following items at intervals no more frequent than indicated:

(1) Drive belts on engine accessories (tension adjustment only); (30,000 miles).

(2) Valve lash (15,000 miles).

(3) Spark plugs (30,000 miles).

(4) Air filter (30,000 miles).

(5) Exhaust gas sensor (30,000 miles): Provided that an audible and/or visible signal approved by the Executive Officer alerts the vehicle operator to the need for sensor maintenance at the mileage point.

(6) Choke (cleaning or lubrication only); (30,000 miles).

(7) In addition, adjustment of the engine idle speed (curb idle and fast idle), valve lash, and engine bolt torque may be performed once during the first 5,000 miles of scheduled driving, provided the manufacturer makes a satisfactory showing that the maintenance will be performed on vehicles in use.

(B) for diesel-powered vehicles, maintenance shall be restricted to the following items at intervals no more frequent than every 12,500 miles of scheduled driving, provided that no maintenance may be performed after 45,000 miles of scheduled driving:

(1) Adjust low idle speed.

(2) Adjust valve lash if required.

(3) Adjust injector timing.

(4) Adjust governor.

(5) Clean and service injector tips.

(6) Adjust drive belt tension on engine accessories.

(7) Check engine bolt torque and tighten as required.

(ii) Change of engine and transmission oil, change or service of oil filter and, for diesel-powered vehicles only, change or service of fuel filter and air filter, will be allowed at the mileage intervals specified in the manufacturer's maintenance instructions.

(iii) Maintenance shall be conducted in a manner consistent with service instructions and specifications provided by the manufacturer for use by customer service personnel.

(2) Delete subparagraph (a)(3) (Service of exhaust gas recirculation system).

(3) Delete subparagraph (a)(4) (Service of catalytic converter).

f. In paragraph 86.078-38 (Maintenance instructions):

1. Amend subparagraph (a) to read:

(B) for diesel-powered vehicles, maintenance shall be restricted to the following items at intervals no more frequent than every 12,500 miles of scheduled driving, provided that no maintenance may be performed after 45,000 miles of scheduled driving:

(1) Adjust low idle speed.

(2) Adjust valve lash if required.

(3) Adjust injector timing.

(4) Adjust governor.

(5) Clean and service injector tips.

(6) Adjust drive belt tension on engine accessories.

(7) Check engine bolt torque and tighten as required.

(ii) Change of engine and transmission oil, change or service of oil filter and, for diesel-powered vehicles only, change or service of fuel filter and air filter, will be allowed at the mileage intervals specified in the manufacturer's maintenance instructions.

(iii) Maintenance shall be conducted in a manner consistent with service instructions and specifications provided by the manufacturer for use by customer service personnel.

(2) Delete subparagraph (a)(3) (Service of exhaust gas recirculation system).

(3) Delete subparagraph (a)(4) (Service of catalytic converter).

f. In paragraph 86.078-38 (Maintenance instructions):

1. Amend subparagraph (a) to read:

(a) The manufacturer shall furnish or cause to be furnished to the purchaser of each new motor vehicle (or motor vehicle engine) subject to the standards prescribed in paragraphs 86.078-8 through 86.078-11 as applicable, written instructions for the maintenance and use of the vehicle (or engine) by the purchaser as may be reasonable and necessary to assure the proper functioning of emission control systems in normal use. Such instructions shall be consistent with and not require maintenance in excess of the restrictions imposed under subparagraph 86.078-25(a)(1), except that the instructions may, subject to approval by the Administrator, require additional maintenance for vehicles operated under extreme conditions. In addition, subject to approval by the Administrator, the instructions may require inspections necessary to insure safe operation of the vehicle in use.

In addition to any maintenance which may be required pursuant to the preceding paragraph, the instructions may also recommend such inspections, maintenance, and repair as may be reasonable and necessary for the proper functioning of the vehicle and its emission control systems. If the instructions recommend maintenance in addition to that which may be required pursuant to the preceding paragraph, they shall distinguish clearly between required and recommended maintenance.

2. Amend subparagraph (c)(1) to read:

(1) Such instructions shall specify the performance of all scheduled maintenance performed by the manufacturer under subparagraph 86.078-25(a)(1).

If the instructions specify recommended maintenance as well as required maintenance, they shall distinguish clearly between the two.

3. Amend subparagraph (d) by adding a new subparagraph (3) to read:

(3) Such instructions shall specify the performance of all scheduled maintenance performed by the manufacturer under subparagraph 86.078-25(a)(1).

If the instructions specify recommended maintenance as well as required maintenance, they shall distinguish clearly between the two.

g. Amend subparagraph 86.078-39(a) (Submission of maintenance instructions) to read:

(a) The manufacturer shall provide to the Administrator, no later than the time of the submission required by paragraph 86.078-23 a copy of the maintenance instructions which the manufacturer proposes to supply to the ultimate purchaser in accordance with subparagraph 86.078-38(a). The Administrator will review such instructions to determine whether they are consistent with federal requirements, and to determine whether the instructions for required maintenance are consistent with the restrictions imposed under subparagraph 86.078-25(a)(1). The Administrator will notify the manufacturer of his determinations.

4. Standards

The following standards represent the maximum projected exhaust emissions for the useful life of the vehicle.

Model Year	Vehicle Type (a)	Equivalent Inertia Weight (lbs.)(b)	Exhaust Emission Standards (grams per vehicle miles) Non-Methane Hydrocarbons(c)	Carbon Monoxide	Oxides of Nitrogen (NO_2)(e)
1981	PC	All	(0.41)	3.4	1.0
	PC(d)	All	0.39 (0.41)	7.0	0.7
	PC(g)	All	0.39 (0.41)	7.0	1.5
	LDT, MDV	0-3999	0.39 (0.41)	9.0	1.0
	LDT, MDV	4000-5999	0.50 (0.50)	9.0	1.5
	MDV	6000&larger	0.60 (0.60)	9.0	2.0
1982	PC	All	0.39 (0.41)	7.0	0.4
	PC(d)	All	0.39 (0.41)	7.0	0.7
	LDT, MDV	0-3999	0.39 (0.41)	9.0	1.0
	LDT, MDV	4000-5999	0.50 (0.50)	9.0	1.5
	MDV	6000&larger	0.60 (0.60)	9.0	2.0
1983 & Sub-sequent	PC	All	0.39 (0.41)	7.0	0.4
	LDT, MDV	0-3999	0.39 (0.41)	9.0	0.4
	LDT, MDV	4000-5999	0.50 (0.50)	9.0	1.0
	MDV	6000&larger	0.60 (0.60)	9.0	1.5

g. Amend subparagraph 86.078-39(a) (Submission of maintenance instructions) to read:

(a) The manufacturer shall provide to the Administrator, no later than the time of the submission required by paragraph 86.078-23 a copy of the maintenance instructions which the manufacturer proposes to supply to the ultimate purchaser in accordance with subparagraph 86.078-38(a). The Administrator will review such instructions to determine whether they are consistent with federal requirements, and to determine whether the instructions for required maintenance are consistent with the restrictions imposed under subparagraph 86.078-25(a)(1). The Administrator will notify the manufacturer of his determinations.

4. Standards

The following standards represent the maximum projected exhaust emissions for the useful life of the vehicle.

Model Year	Vehicle Type (a)	Equivalent Inertia Weight (lbs.)(b)	Exhaust Emission Standards (grams per vehicle miles) Non-Methane Hydrocarbons(c)	Carbon Monoxide	Oxides of Nitrogen (NO_2)(e)
1981	PC	All	(0.41)	3.4	1.0
	PC(d)	All	0.39 (0.41)	7.0	0.7
	PC(g)	All	0.39 (0.41)	7.0	1.5
	LDT, MDV	0-3999	0.39 (0.41)	9.0	1.0
	LDT, MDV	4000-5999	0.50 (0.50)	9.0	1.5
	MDV	6000&larger	0.60 (0.60)	9.0	2.0
1982	PC	All	0.39 (0.41)	7.0	0.4
	PC(d)	All	0.39 (0.41)	7.0	0.7
	LDT, MDV	0-3999	0.39 (0.41)	9.0	1.0
	LDT, MDV	4000-5999	0.50 (0.50)	9.0	1.5
	MDV	6000&larger	0.60 (0.60)	9.0	2.0
1983 & Sub-sequent	PC	All	0.39 (0.41)	7.0	0.4
	LDT, MDV	0-3999	0.39 (0.41)	9.0	0.4
	LDT, MDV	4000-5999	0.50 (0.50)	9.0	1.0
	MDV	6000&larger	0.60 (0.60)	9.0	1.5

Model Year	Vehicle Type (a)	Equivalent Inertia Weight (lbs.)(b)	100,000 Mile Exhaust Emission Standards (grams per vehicle mile) Non-Methane Hydrocarbons(c)(f)	Carbon Monoxide	Oxides of Nitrogen NO_2(e)
1981	PC(Option 1)	All	0.39	3.4	1.5
	PC(Option 2)	All	0.46	4.0	1.5
	LDT, MDV (Option 1)	0-3999	0.39 (0.41)	9.0	1.5
	LDT, MDV (Option 2)	0-3999	0.46	10.6	1.5
	LDT, MDV	4000-5999	0.50 (0.50)	9.0	2.0
	MDV	6000+larger	0.60 (0.60)	9.0	2.3
1982	PC(Option 1)	All	(0.41)	7.0	1.0
	PC(Option 2)	All	0.46	8.3	1.0
	LDT, MDV (Option 1)	0-3999	0.39 (0.41)	9.0	1.5
	LDT, MDV (Option 2)	0-3999	0.46	10.6	1.5
	LDT, MDV	4000-5999	0.50 (0.50)	9.0	2.0
	MDV	6000&larger	0.60 (0.60)	9.0	2.3
1983 & Sub-sequent	PC	All	0.39 (0.41)	7.0	1.0
	PC	All	0.46	8.3	1.0
	LDT, MDV (Option 1)	0-3999	0.39 (0.41)	9.0	1.0
	LDT, MDV (Option 2)	0-3999	0.46	10.6	1.0
	LDT, MDV	4000-5999	0.50 (0.50)	9.0	1.5
	MDV	6000&larger	0.60 (0.60)	9.0	2.0

(a) "PC" means passenger cars.
"LDT" means light-duty trucks.
"MDV" means medium-duty vehicles.

(b) Equivalent inertia weights are determined under subparagraph 86.129-79(a).

(c) Hydrocarbon standards in parentheses apply to total hydrocarbons.

(d) The second set of passenger car standards is optional. A manufacturer must select either the primary or optional sets of standards for its full product line for the entire two-year period.

(e) The maximum projected emissions of oxides of nitrogen measured on the federal Highway Fuel Economy Test (HWFET; 40 CFR Part 600, Subparagraph B) shall be no greater than 1.33 times the applicable passenger car standards and 2.0 times the applicable light-duty truck and medium-duty vehicle standards shown in the table. Both the projected emissions and the HWFET standard shall be rounded to the nearest 0.1 gm/mi before being compared.

(f) For vehicles from evaporative emissions families with projected 50,000 mile evaporative emissions values below 1.0 gm/test, an adjustment to the hydrocarbon exhaust emission standard may be granted by the Executive Officer. The adjusted standard will be calculated using the following formula:

$$HC_{ex} = .75\ (.185 - \frac{Di+3.3\ Hs}{29.4}) + HC_o$$

Where:

HC_{ex} = adjusted exhaust hydrocarbon standard

HC_o = unadjusted exhaust hydrocarbon standard

Di = diurnal evaporative emissions
Hs = hot soak evaporative emissions.

(g) For vehicles certified to special standards authorized by Section 1960.2, Article 2, subchapter 1, Chapter 3, Title 13, California Administrative Code.

5. Additional Requirements

a. A statement must be supplied that the production vehicles shall be in all material respcts the same as those for which certification is granted.

b. If a gasoline-fueled vehicle manufacturer requires the use of unleaded fuel, a statement will be required that the engine and transmission combinations for which certification is requested are designed to operate satisfactorily on a gasoline having a research octane number not greater than 91.

c. Labeling required pursuant to paragraph 86.079-35 and Section 1965, Chapter 3, Title 13 of the California Administrative Code shall conform with the requirements specified in the "California Motor Vehicle Tune-Up Label Specifications."

(d) The second set of passenger car standards is optional. A manufacturer must select either the primary or optional sets of standards for its full product line for the entire two-year period.

(e) The maximum projected emissions of oxides of nitrogen measured on the federal Highway Fuel Economy Test (HWFET; 40 CFR Part 600, Subparagraph B) shall be no greater than 1.33 times the applicable passenger car standards and 2.0 times the applicable light-duty truck and medium-duty vehicle standards shown in the table. Both the projected emissions and the HWFET standard shall be rounded to the nearest 0.1 gm/mi before being compared.

(f) For vehicles from evaporative emissions families with projected 50,000 mile evaporative emissions values below 1.0 gm/test, an adjustment to the hydrocarbon exhaust emission standard may be granted by the Executive Officer. The adjusted standard will be calculated using the following formula:

$$HC_{ex} = .75\ (.185 - \frac{Di+3.3\ Hs}{29.4}) + HC_o$$

Where:

HC_{ex} = adjusted exhaust hydrocarbon standard

HC_o = unadjusted exhaust hydrocarbon standard

Di = diurnal evaporative emissions
Hs = hot soak evaporative emissions.

(g) For vehicles certified to special standards authorized by Section 1960.2, Article 2, subchapter 1, Chapter 3, Title 13, California Administrative Code.

5. Additional Requirements

a. A statement must be supplied that the production vehicles shall be in all material respcts the same as those for which certification is granted.

b. If a gasoline-fueled vehicle manufacturer requires the use of unleaded fuel, a statement will be required that the engine and transmission combinations for which certification is requested are designed to operate satisfactorily on a gasoline having a research octane number not greater than 91.

c. Labeling required pursuant to paragraph 86.079-35 and Section 1965, Chapter 3, Title 13 of the California Administrative Code shall conform with the requirements specified in the "California Motor Vehicle Tune-Up Label Specifications."

d. For gasoline-powered vehicles evidence shall be supplied that the air/fuel metering system or secondary air injection system is capable of providing sufficient oxygen to theoretically allow enough oxidation to attain the CO emission standard at barometric pressures equivalent to those expected at altidues ranging from sea level to 6,000 feet elevation.

e. The mechanism for adjusting the idle air/fuel mixture, if any, shall be designed so that either:

(i) The mixture adjustment mechanism is not visible, even with the air cleaner removed, and special tools and/or procedures are required to make adjustments; or

(ii) in the alternative, the Executive Officer may, upon reasonable notice to the manufacturer, require that a certification test of a vehicle be conducted with the idle air/fuel mixture at any setting which the Executive Officer finds corresponds to settings likely to be encountered in actual use. The Executive Officer, in making this finding, shall consider the difficulty of making adjustments, damage to the carburetor in the event of any effort to make an improper adjustment, and the need to replace parts following the adjustment.

The manufacturer shall submit for approval by the Executive Officer his or her proposed method for compliance with this requirement in his or her preliminary application for certification.

f. The exhaust emissions shall be measured from all exhaust emission data vehicles tested in accordance with the federal Highway Fuel Economy Test (HWFET; 40 CFR Part 600 Subpart B). The oxides of nitrogen emissions measured during such tests shall be multiplied by the oxides of nitrogen deterioration factor computed in accordance with paragraph 86.078-28, and then rounded and compared with the standard as set forth in paragraph 4 above. All data obtained pursuant to this paragraph shall be reported in accordance with procedures applicable to other exhaust emissions data required pursuant to these procedures.

In the event that one or more of the manufacturer's emission data vehicles fail the HWFET standard listed in paragraph 4, the manufacturer may submit to the Executive Officer engineering data or other evidence showing that the system is capable of complying with the standard. If the Executive Officer finds, on the basis of an engineering evaluation, that the system can comply with the HWFET standard, he or she may accept the information supplied by the manufacturer in lieu of vehicle test data.

g. The manufacturer shall submit to the Executive Officer a statement that those vehicles for which certification is requested have driveability and performance characteristics which satisfy that manufacturer's customary driveability and performance requirements for vehicles sold in the United States. This statement shall be based on driveability data and other evidence showing compliance with the manufacturer's performance criteria. This statement shall be supplied with the manufacturer's final application for certification, and with all running changes for which emission testing is required.

If the Executive Officer has evidence to show that in-use vehicles demonstrate poor performance that could result in wide-spread tampering with the emission control systems, he or she may request all driveability data and other evidence used by the manufacturer to justify the performance statement.

6. Optional 100,000 Mile Certification Procedure

The alternate emission standards shown in paragraph (4) above shall apply to any engine family which meets all of the following additional requirements:

a. Each exhaust emission durability data vehicle shall be driven, with all emission control systems installed and operating, for 100,000 miles or such lesser distance as the Executive Officer may agree to as meeting the objectives of this procedure. Compliance with the emission standards shall be established as follows:

(i) The linear regression line for all pollutants shall be established by use of all required data from tests of the durability vehicle at every 5,000 mile intervals from 5,000 to 100,000 miles. The requirements in subparagraph 86.078-28(a)(4)(i)(B)(durability vehicles must meet emissions standards) refer, for each pollutant, to the highest of either the federal 50,000 mile or California 100,000 mile emission standards.

In the event that one or more of the manufacturer's emission data vehicles fail the HWFET standard listed in paragraph 4, the manufacturer may submit to the Executive Officer engineering data or other evidence showing that the system is capable of complying with the standard. If the Executive Officer finds, on the basis of an engineering evaluation, that the system can comply with the HWFET standard, he or she may accept the information supplied by the manufacturer in lieu of vehicle test data.

g. The manufacturer shall submit to the Executive Officer a statement that those vehicles for which certification is requested have driveability and performance characteristics which satisfy that manufacturer's customary driveability and performance requirements for vehicles sold in the United States. This statement shall be based on driveability data and other evidence showing compliance with the manufacturer's performance criteria. This statement shall be supplied with the manufacturer's final application for certification, and with all running changes for which emission testing is required.

If the Executive Officer has evidence to show that in-use vehicles demonstrate poor performance that could result in wide-spread tampering with the emission control systems, he or she may request all driveability data and other evidence used by the manufacturer to justify the performance statement.

6. Optional 100,000 Mile Certification Procedure

The alternate emission standards shown in paragraph (4) above shall apply to any engine family which meets all of the following additional requirements:

a. Each exhaust emission durability data vehicle shall be driven, with all emission control systems installed and operating, for 100,000 miles or such lesser distance as the Executive Officer may agree to as meeting the objectives of this procedure. Compliance with the emission standards shall be established as follows:

(i) The linear regression line for all pollutants shall be established by use of all required data from tests of the durability vehicle at every 5,000 mile intervals from 5,000 to 100,000 miles. The requirements in subparagraph 86.078-28(a)(4)(i)(B)(durability vehicles must meet emissions standards) refer, for each pollutant, to the highest of either the federal 50,000 mile or California 100,000 mile emission standards.

25(a)(1)(i)(B) Option 2. For 1981 and later model gasoline or diesel-fueled vehicles, maintenance shall be restricted to the inspection, replacement, cleaning, adjustment, and/or service of the following items at intervals no more frequent than indicated:

(1) Drive belt tension on engine accessories (30,000 miles).
(2) Valve lash (15,000 miles).
(3) Spark plugs (30,000 miles).
(4) Air filter (30,000 miles).
(5) Fuel filter (30,000 miles).
(6) Idle speed (30,000 miles).
(7) Injection timing (30,000 miles).

(iii) In addition, adjustment of the engine idle speed (curb idle and fast idle), valve lash, and engine bolt torque may be performed once during the first 5,000 miles of scheduled driving, provided the manufacturer makes a satisfactory showing that the maintenance will be performed on vehicles in use.

c. The manufacturer agrees to apply to vehicles certified under this paragraph the provisions of Section 43204 of the California Health and Safety Code for a period of ten year or 100,000 miles, whichever first occurs.

(ii) Compliance with the hydrocarbon and carbon monoxide standards shall be determined as follows:

(a) For Option 1:

(A) the interpolated 4,000 and 50,000 mile points on the linear regression line in (i) shall not exceed the appropriate hydrocarbon and carbon monoxide standards, except as in (B) below.

(B) the linear regression line in (i) may exceed the standard provided that no data point exceeds the standard.

(C) the hydrocarbon and carbon monoxide data from the 4,000 mile test point of the emission data vehicle shall be multiplied by the deterioration factor computed by dividing the interpolated 50,000 mile point by the interpolated 4,000 mile point. These values shall not exceed the appropriate hydrocarbon and carbon monoxide standards.

(b) For Option 2:

(A) the interpolated 4,000 and 100,000 mile points on the linear regression line in (i) shall not exceed the appropriate hydrocarbon and carbon monoxide standards, except as in (B) below.

(B) the linear regression line in (i) may exceed the standard provided that no data point exceeds the standard.

(C) the hydrocarbon and carbon monoxide data from the 4,000 mile test point of the emission data vehicle shall be multiplied by the deterioration factor computed by dividing the interpolated 100,000 mile point by the interpolated 4,000 mile point. These values shall not exceed the appropriate 100,000 mile hydrocarbon and carbon monoxide standards.

(iii) Compliance with the oxides of nitrogen standard for Options 1 and 2 shall be determined as follows:

(a) the interpolated 4,000 and 100,000 mile points on the linear regression line in (i) shall not exceed the appropriate 100,000 mile oxides of nitrogen standard except as in (b) below.

(b) the linear regression line in (i) may exceed the standard provided that no data point exceeds the standard.

(c) the oxides of nitrogen data from the 4,000 mile test point of the emission data vehicle shall be multiplied by the deterioration factor computed by dividing the interpolated 100,000 mile point by the interpolated 4,000 mile point. These values shall not exceed the appropriate 100,000 mile oxides of nitrogen standard.

All references in these test procedures to "useful life," 5 years, and 50,000 miles shall mean "total life," 10 years, and 100,000 miles, respectively, except in subparagraph (ii).

b. Only the following scheduled maintenance shall be allowed under subpargraph 86.078.25(a)(1)(i).

25(a)(1)(i)(A) Option 1. For 1981 and later model gasoline or diesel-fueled vehicles, maintenance shall be restricted to the inspection, replacement, cleaning, adjustment, and/or service of the following items at intervals no more frequent than indicated.

(1) Drive belt tension on engine accessories (30,000 miles).
(2) Valve lash (15,000 miles).
(3) Spark plugs (30,000 miles).
(4) Air filter (30,000 miles).
(5) Exhaust gas sensor (30,000 miles); Provided that an audible and/or visible signal approved by the Executive Officer alerts the vehicle operator to the need for sensor maintenance.
(6) Choke, cleaning or lubrication only (30,000 miles).
(7) Idle speed (30,000 miles).
(8) Fuel Filter (30,000 miles).
(9) Injection timing (30,000 miles).

(iii) Compliance with the oxides of nitrogen standard for Options 1 and 2 shall be determined as follows:

(a) the interpolated 4,000 and 100,000 mile points on the linear regression line in (i) shall not exceed the appropriate 100,000 mile oxides of nitrogen standard except as in (b) below.

(b) the linear regression line in (i) may exceed the standard provided that no data point exceeds the standard.

(c) the oxides of nitrogen data from the 4,000 mile test point of the emission data vehicle shall be multiplied by the deterioration factor computed by dividing the interpolated 100,000 mile point by the interpolated 4,000 mile point. These values shall not exceed the appropriate 100,000 mile oxides of nitrogen standard.

All references in these test procedures to "useful life," 5 years, and 50,000 miles shall mean "total life," 10 years, and 100,000 miles, respectively, except in subparagraph (ii).

b. Only the following scheduled maintenance shall be allowed under subpargraph 86.078.25(a)(1)(i).

25(a)(1)(i)(A) Option 1. For 1981 and later model gasoline or diesel-fueled vehicles, maintenance shall be restricted to the inspection, replacement, cleaning, adjustment, and/or service of the following items at intervals no more frequent than indicated.

(1) Drive belt tension on engine accessories (30,000 miles).
(2) Valve lash (15,000 miles).
(3) Spark plugs (30,000 miles).
(4) Air filter (30,000 miles).
(5) Exhaust gas sensor (30,000 miles); Provided that an audible and/or visible signal approved by the Executive Officer alerts the vehicle operator to the need for sensor maintenance.
(6) Choke, cleaning or lubrication only (30,000 miles).
(7) Idle speed (30,000 miles).
(8) Fuel Filter (30,000 miles).
(9) Injection timing (30,000 miles).

State of California
AIR RESOURCES BOARD

Response to Significant Environmental Issues

ITEM: Confirmation of Emergency Adoption of Amendments to Title 13, California Administrative Code, regarding Exhaust Emissions Standards for 1980 and 1981 Passenger Cars and to Consider Conforming Amendments to Assembly Line Test Procedures.

Public Hearing Date: March 5, 1980

Response Date: March 5, 1980

Issuing Authority: Air Resources Board

Comments: NONE

Response: N/A

Certified: Sally Rump
Board Secretary

Date: April 28, 1980

State of California

Memorandum

To : Huey D. Johnson
Secretary
Resources Agency

Date : April 30, 1980

Subject: Filing of Notice of Decision of the Air Resources Board

From : Air Resources Board

Pursuant to Title 17, Section 60007(b), and in compliance with Air Resources Board certification under section 21080.5 of the Public Resources Code, the Air Resources Board hereby forwards for posting the attached notice of decision and response to environmental comments raised during the comment period.

Sally Rump
Board Secretary

attachments

State of California
AIR RESOURCES BOARD

Resolution 80-6

March 26, 1980

WHEREAS, Section 39601 of the Health and Safety Code authorizes the Air Resources Board to adopt standards, rules and regulations necessary for the proper execution of the powers and duties granted to and imposed upon the Board by law;

WHEREAS, Section 43210 of the Health and Safety Code requires that the Board adopt regulations which provide for the testing of new motor vehicles on factory assembly lines or in such manner as the Board determines best suited to carry out the purpose of Part 5 (commencing with Section 43000), Division 26, of the Health and Safety Code;

WHEREAS, Section 43000(e) of the Health and Safety Code states that emission standards applied to new motor vehicles are standards with which all new motor vehicles shall comply; and

WHEREAS, the California Environmental Quality Act and Air Resources Board regulations require that an activity not be adopted as originally proposed where significant environmental impacts have been identified and where there are feasible alternatives or mitigation measures which would significantly reduce such impacts;

WHEREAS, a public hearing and other administrative proceedings have been held in accordance with the provisions of the Administrative Procedure Act (Government Code, Title 2, Division 3, Part 1, Chapter 4.5);

WHEREAS, the Board finds:

That on July 20, 1979, the United States Court of Appeals for the District of Columbia Circuit vacated the decision of the Administrator of the Environmental Protection Agency that permitted California to enforce a NOx standard of 1.0 grams per mile for 1980 passenger cars. The Court stated in its opinion that EPA could not permit California to "deny to a small manufacturer the lead time that Congress has found to be necessary" to meet a NOx emissions standard of 1.0 gram per mile under Section 202(b)(1)(B) of the Clean Air Act. This decision obviated California's authority to enforce a 1.0 gram per mile NOx standard for passenger cars made by qualifying small manufacturers.

That some manufacturers contend that the Court's decision applies to light-duty trucks and medium-duty vehicles as well as passenger cars but the ARB does not concede this;

That the staff has encouraged the good faith efforts of those who obtain and apply the most promising emissions control technology;

That during negotiations with the ARB, American Motors Corporation agreed to comply with the regulation proposed by the staff;

That further attempts to narrow the scope of the Court decision could only be pursued through litigation because no other potential mitigation measures are available to the staff;

That environmental impacts will be minor, and that no mitigation measures or alternatives are feasible within the scope of the decision of the Circuit Court of Appeals;

That the proposed regulation 1960.3 provides for:

(1) A reduction in vehicle NOx emissions by establishing for certification of 1981 and 1982 engine families less than 4,000 pounds equivalent inertia weight:

(a) A NOx standard, 25% lower than 1980 model families of four-wheel drive light-duty trucks, and

(b) A NOx standard, 35% lower than 1980 model families of medium-duty vehicles, and

(2) A further reduction of NOx emissions by establishing for 1981 and 1982 production vehicles:

(a) A NOx assembly-line test level, 50% lower than 1980 model four-wheel drive light-duty trucks, and

(b) A NOx assembly-line test level, 57% lower than 1980 model medium-duty vehicles, and

(3) Making relief available to the vehicle manufacturer if unanticipated technical problems prevent production vehicles from meeting the 1.0 gm/mi NOx average emission level.

NOW, THEREFORE BE IT RESOLVED, that the Board hereby amends its regulations in Article 2, Subchapter 1, Chapter 3, Title 13, California Administrative Code, by adding the following section 1960.3 to read as follows:

1960.3 Special Standards for 1981 and 1982 Model Light-Duty Trucks and Medium-Duty Vehicles, 0-3999 Pound Equivalent Inertia Weight

(a) Notwithstanding any other provision of this Chapter, for any vehicle manufacturer who is subject to "in lieu" standards pursuant to Section 202(b)(1)(B) of the Clean Air Act as amended in 1977, the oxides of nitrogen emissions from 1981 and 1982 model Light-Duty Trucks and Medium-Duty Vehicles, 0-3999 Pound Equivalent Inertia Weight, shall not exceed an assembly-line test level of 1.0 gram per vehicle mile as determined on a production average basis as measured by calendar quarter and evaluated on a cumulative basis.

(b) The oxides of nitrogen emissions from each 1981 and 1982 model Light-Duty Truck and Medium-Duty Vehicle engine family and subgroup produced by a manufacturer pursuant to this section shall not exceed a standard of 1.5 grams per vehicle mile.

(c) Joint ARB-manufacturer evaluations of production average data will be made each six months, starting with production test data accumulated through December 31, 1980; and appropriate relief will be made available to such manufacturer should unanticipated technical problems yield an inability to meet the production average level required by this section.

(d) All definitions, standards, test procedures and other requirements of this Chapter not inconsistent with this section shall apply to all vehicles produced by such manufacturer for sale in California.

BE IT FURTHER RESOLVED, that the Board hereby amends: (1) the "California Assembly-Line Test Procedures for 1981 Model Year Passenger Cars, Light-Duty Trucks and Medium-Duty Vehicles," and (2) "California Exhaust Emission Standards and Test Procedures for 1981 and Subsequent Model Passenger Cars, Light-Duty Trucks and Medium-Duty Vehicles," and (3) Section 2059, Title 13 California Administrative Code as set forth in Attachments 1, 2, and 3 respectively.

BE IT FURTHER RESOLVED, that the Board hereby finds that its regulations in Sections 1960.3 and 2059, Title 13, California Administrative Code, the 1981 assembly-line test procedures and related 1981 and 1982 model year exhaust emission standards and test procedures are individually for each vehicle category, and, in the aggregate, at least as protective of public health and welfare as applicable federal regulations.

I certify ~~that~~ the above is a true and correct copy of Resolution 80-6, as adopted by the Air Resources Board.

Sally Rump

Sally Rump
Board Secretary

5/8/80

Date

ATTACHMENT 1

Proposed

State of California

AIR RESOURCES BOARD

California Assembly-Line Test Procedures for ~~1980~~ 1981 Model Year Passenger Cars, Light-Duty Trucks and Medium-Duty Vehicles

Adopted: December 19, 1979
Amended: March 5, 1980
Amended: March 26, 1980

Note: These procedures are printed in a style to emphasize the differences from the 1980 Assembly-Line Test Procedures as amended May 9, 1979. Additions are indicated by underlining and deletions are lined out with dashes. March 5, 1980 and March 26, 1980 changes are listed in Part 5.

(c) All 1980 and 1981 model cars tested to date by the end of each calendar quarter.

(d) All 1980 and 1981 model cars and, separately, 1981 model LDTs plus MDVs tested to date by December 31, 1980, by June 30, 1981 and by December 31, 1981.

(2) Subgroups

The NOx emission results shall be averaged and reported by engine family subgroup in each regular quarterly assembly-line report.

b. Semi-Annual Evaluations

Joint ARB - manufacturer evaluations will be made each six months to determine compliance with the 1.0 gm/mi NOx production level based on accumulated test results from all 1980 and 1981 cars as well as 1981 LDTs plus MDVs tested. The first evaluation will be made based on averaged NOx test data accumulated through December 31, 1980. Subsequent evaluations will be made for data accumulated through June 30, 1981 and also for data accumulated through the end of the 1981 model year production respectively.

If the NOx value exceeds the 1.0 gm/mi level, but the manufacturer shows that unanticipated technical problems caused the 1.0 gm/mi NOx production average to be

(c) All 1980 and 1981 model cars tested to date by the end of each calendar quarter.

(d) All 1980 and 1981 model cars and, separately, 1981 model LDTs plus MDVs tested to date by December 31, 1980, by June 30, 1981 and by December 31, 1981.

(2) Subgroups

The NOx emission results shall be averaged and reported by engine family subgroup in each regular quarterly assembly-line report.

b. Semi-Annual Evaluations

Joint ARB - manufacturer evaluations will be made each six months to determine compliance with the 1.0 gm/mi NOx production level based on accumulated test results from all 1980 and 1981 cars as well as 1981 LDTs plus MDVs tested. The first evaluation will be made based on averaged NOx test data accumulated through December 31, 1980. Subsequent evaluations will be made for data accumulated through June 30, 1981 and also for data accumulated through the end of the 1981 model year production respectively.

If the NOx value exceeds the 1.0 gm/mi level, but the manufacturer shows that unanticipated technical problems caused the 1.0 gm/mi NOx production average to be

5. Special Requirements for Low Production Vehicle Manufacturers.

The following requirements apply only to those vehicle manufacturers who were granted relief, by the Executive Officer, under Title 13, California Administrative Code (C.A.C.) Section 1960.2 Special Standards for 1980 and 1981 Model Passenger Cars, or Section 1960.3 Special Standards for 1981 and 1982 Model Light-Duty Trucks and Medium-Duty Vehicles, 0-3999 Pound Equivalent Inertia Weight.

The requirements listed below are to be followed as supplemental to and when contrary to other requirements specified in part "C. Quality Audit Test Procedures," Section "3. Evaluation" and "4. Reports." These requirements are listed to implement, define and clarify the Board requirements of C.A.C. Section 1960.2 as well as Section 1960.3.

a. Additional Reporting Requirements

(1) NOx Emissions

The cumulative average of oxides of nitrogen (NOx) emissions from the entire quality audit passenger car line and, separately, from the entire quality audit light-duty truck (LDT) plus medium-duty vehicle (MDV) lines shall be reported both before and after applying deterioration factors for:

(a) All 1981 model cars and, separately, LDTs plus MDVs testing during each calendar quarter.

(b) All 1981 model cars and, separately, LDTs plus MDVs tested to date by the end of each calendar quarter.

State of California
AIR RESOURCES BOARD

Note: These procedures are printed in a style to indicate the adopted changes. New text is underlined and deleted portions are noted.

CALIFORNIA EXHAUST EMISSION STANDARDS AND TEST PROCEDURES FOR 1981 AND SUBSEQUENT MODEL PASSENGER CARS, LIGHT-DUTY TRUCKS, AND MEDIUM-DUTY VEHICLES

Adopted: November 23, 1976
Adopted: December 14, 1976
Amended: May 26, 1977
Amended: June 8, 1977
Amended: June 22, 1977
Amended: September 20, 1977
Amended: January 15, 1978
Amended: March 1, 1978
Amended: April 10, 1978
Amended: May 24, 1978
Amended: February 9, 1979
Amended: May 22, 1979
Amended: March 5, 1980
Amended: March 26, 1980

State of California
AIR RESOURCES BOARD

Note: These procedures are printed in a style to indicate the adopted changes. New text is underlined and deleted portions are noted.

CALIFORNIA EXHAUST EMISSION STANDARDS AND TEST PROCEDURES FOR 1981 AND SUBSEQUENT MODEL PASSENGER CARS, LIGHT-DUTY TRUCKS, AND MEDIUM-DUTY VEHICLES

Adopted: November 23, 1976
Adopted: December 14, 1976
Amended: May 26, 1977
Amended: June 8, 1977
Amended: June 22, 1977
Amended: September 20, 1977
Amended: January 15, 1978
Amended: March 1, 1978
Amended: April 10, 1978
Amended: May 24, 1978
Amended: February 9, 1979
Amended: May 22, 1979
Amended: March 5, 1980
Amended: March 26, 1980

g. Amend subparagraph 86.078-39(a) (Submission of maintenance instructions) to read:

(a) The manufacturer shall provide to the Administrator, no later than the time of the submission required by paragraph 86.078-23 a copy of the maintenance instructions which the manufacturer proposes to supply to the ultimate purchaser in accordance with subparagraph 86.078-38(a). The Administrator will review such instructions to determine whether they are consistent with federal requirements, and to determine whether the instructions for required maintenance are consistent with the restrictions imposed under subparagraph 86.078-25(a)(1). The Administrator will notify the manufacturer of his determinations.

4. Standards

The following standards represent the maximum projected exhaust emissions for the useful life of the vehicle.

Model Year	Vehicle Type (a)	Equivalent Inertia Weight (lbs.)(b)	Exhaust Emission Standards (grams per vehicle miles) Non-Methane Hydrocarbons(c)	Carbon Monoxide	Oxides of Nitrogen (NO_2)(e)
1981	PC	All	(0.41)	3.4	1.0
	PC(d)	All	0.39 (0.41)	7.0	0.7
	PC(g)	All	0.39 (0.41)	7.0	1.5
	LDT, MDV	0-3999	0.39 (0.41)	9.0	1.0
	LDT,MDV(h)	0-3999	0.39 (0.41)	9.0	1.5
	LDT, MDV	4000-5999	0.50 (0.50)	9.0	1.5
	MDV	6000&larger	0.60 (0.60)	9.0	2.0
1982	PC	All	0.39 (0.41)	7.0	0.4
	PC(d)	All	0.39 (0.41)	7.0	0.7
	LDT, MDV	0-3999	0.39 (0.41)	9.0	1.0
	LDT, MDV	4000-5999	0.50 (0.50)	9.0	1.5
	LDT,MDV(h)	0-3999	0.39 (0.41)	9.0	1.5
	MDV	6000&larger	0.60 (0.60)	9.0	2.0
1983 & Sub-sequent	PC	All	0.39 (0.41)	7.0	0.4
	LDT, MDV	0-3999	0.39 (0.41)	9.0	0.4
	LDT, MDV	4000-5999	0.50 (0.50)	9.0	1.0
	MDV	6000&larger	0.60 (0.60)	9.0	1.5

(d) The second set of passenger car standards is optional. A manufacturer must select either the primary or optional sets of standards for its full product line for the entire two-year period.

(e) The maximum projected emissions of oxides of nitrogen measured on the federal Highway Fuel Economy Test (HWFET; 40 CFR Part 600, Subparagraph B) shall be no greater than 1.33 times the applicable passenger car standards and 2.0 times the applicable light-duty truck and medium-duty vehicle standards shown in the table. Both the projected emissions and the HWFET standard shall be rounded to the nearest 0.1 gm/mi before being compared.

(f) For vehicles from evaporative emissions families with projected 50,000 mile evaporative emissions values below 1.0 gm/test, an adjustment to the hydrocarbon exhaust emission standard may be granted by the Executive Officer. The adjusted standard will be calculated using the following formula:

$$HC_{ex} = .75\ (.185 - \frac{Di+3.3\ Hs}{29.4}) + HC_o$$

Where:

HC_{ex} = adjusted exhaust hydrocarbon standard

HC_o = unadjusted exhaust hydrocarbon standard

Di = diurnal evaporative emissions
Hs = hot soak evaporative emissions.

(g) For vehicles certified to special standards authorized by Section 1960.2, Article 2, subchapter 1, Chapter 3, Title 13, California Administrative Code.

(h) For vehicles certified to special standards authorized by Section 1960.3, Article 2, subchapter 1, Chapter 3, Title 13, California Administrative Code.

5. Additional Requirement

a. A statement must be supplied that the production vehicles shall be in all material respcts the same as those for which certification is granted.

b. If a gasoline-fueled vehicle manufacturer requires the use of unleaded fuel, a statement will be required that the engine and transmission combinations for which certification is requested are designed to operate satisfactorily on a gasoline having a research octane number not greater than 91.

(d) The second set of passenger car standards is optional. A manufacturer must select either the primary or optional sets of standards for its full product line for the entire two-year period.

(e) The maximum projected emissions of oxides of nitrogen measured on the federal Highway Fuel Economy Test (HWFET; 40 CFR Part 600, Subparagraph B) shall be no greater than 1.33 times the applicable passenger car standards and 2.0 times the applicable light-duty truck and medium-duty vehicle standards shown in the table. Both the projected emissions and the HWFET standard shall be rounded to the nearest 0.1 gm/mi before being compared.

(f) For vehicles from evaporative emissions families with projected 50,000 mile evaporative emissions values below 1.0 gm/test, an adjustment to the hydrocarbon exhaust emission standard may be granted by the Executive Officer. The adjusted standard will be calculated using the following formula:

$$HC_{ex} = .75 \left(.185 - \frac{Di+3.3\ Hs}{29.4}\right) + HC_o$$

Where:

HC_{ex} = adjusted exhaust hydrocarbon standard

HC_o = unadjusted exhaust hydrocarbon standard

Di = diurnal evaporative emissions
Hs = hot soak evaporative emissions.

(g) For vehicles certified to special standards authorized by Section 1960.2, Article 2, subchapter 1, Chapter 3, Title 13, California Administrative Code.

(h) For vehicles certified to special standards authorized by Section 1960.3, Article 2, subchapter 1, Chapter 3, Title 13, California Administrative Code.

5. Additional Requirement

a. A statement must be supplied that the production vehicles shall be in all material respcts the same as those for which certification is granted.

b. If a gasoline-fueled vehicle manufacturer requires the use of unleaded fuel, a statement will be required that the engine and transmission combinations for which certification is requested are designed to operate satisfactorily on a gasoline having a research octane number not greater than 91.

Amend Section 2059, Title 13, California Admininistrative Code, as follows:

2059 Assembly-Line Test Procedures - 1981 Model Year.

New 1981 model year passenger cars, light-duty trucks, and medium-duty vehicles subject to certification and manufactured for sale in California shall be tested in accordance with the "California Assembly-Line Test Procedures for 1981 Model Year Passenger Cars, Light-Duty Trucks and Medium-Duty Vehicles," adopted December 19, 1979, as amended March 26, 1980.

Add Section 1960.3, Title 13, California Administrative Code to read as follows:

1960.3 Special Standards for 1981 and 1982 Model Light-Duty Trucks and Medium-Duty Vehicles, 0-3999 Pound Equivalent Inertia Weight

(a) Notwithstanding any other provision of this Chapter, for any vehicle manufacturer who is subject to "in lieu" standards pursuant to Section 202(b)(1)(B) of the Clean Air Act as amended in 1977, the oxides of nitrogen emissions from 1981 and 1982 model Light-Duty Trucks and Medium-Duty Vehicles, 0-3999 Pound Equivalent Inertia Weight, shall not exceed an assembly line test level of 1.0 grams per vehicle mile as determined on a production average basis as measured by calendar quarter and evaluated on a cumulative basis.

(b) The oxides of nitrogen emissions from each 1981 and 1982 model Light-Duty Truck and Medium-Duty Vehicle engine family and subgroup produced by a manufacturer pursuant to this section shall not exceed a standard of 1.5 grams per vehicle mile.

(c) Joint ARB-manufacturer evaluations of production average data will be made each six months, starting with production test data accumulated through December 31, 1980, and appropriate relief will be made available to such manufacturer should unanticipated technical problems yield an inability to meet the production average level required by this section.

(d) All definitions, standards, test procedures and other requirements of this Chapter not inconsistent with this section shall apply to all vehicles produced by such manufacturer for sale in California.

Add Section 1960.3, Title 13, California Administrative Code to read as follows:

1960.3 Special Standards for 1981 and 1982 Model Light-Duty Trucks and Medium-Duty Vehicles, 0-3999 Pound Equivalent Inertia Weight

(a) Notwithstanding any other provision of this Chapter, for any vehicle manufacturer who is subject to "in lieu" standards pursuant to Section 202(b)(1)(B) of the Clean Air Act as amended in 1977, the oxides of nitrogen emissions from 1981 and 1982 model Light-Duty Trucks and Medium-Duty Vehicles, 0-3999 Pound Equivalent Inertia Weight, shall not exceed an assembly line test level of 1.0 grams per vehicle mile as determined on a production average basis as measured by calendar quarter and evaluated on a cumulative basis.

(b) The oxides of nitrogen emissions from each 1981 and 1982 model Light-Duty Truck and Medium-Duty Vehicle engine family and subgroup produced by a manufacturer pursuant to this section shall not exceed a standard of 1.5 grams per vehicle mile.

(c) Joint ARB-manufacturer evaluations of production average data will be made each six months, starting with production test data accumulated through December 31, 1980, and appropriate relief will be made available to such manufacturer should unanticipated technical problems yield an inability to meet the production average level required by this section.

(d) All definitions, standards, test procedures and other requirements of this Chapter not inconsistent with this section shall apply to all vehicles produced by such manufacturer for sale in California.

Amend Section 2059, Title 13, California Administrative Code, as follows:

2059 Assembly-Line Test Procedures - 1981 Model Year.

New 1981 model year passenger cars, light-duty trucks, and medium-duty vehicles subject to certification and manufactured for sale in California shall be tested in accordance with the "California Assembly-Line Test Procedures for 1981 Model Year Passenger Cars, Light-Duty Trucks and Medium-Duty Vehicles," adopted December 19, 1979, as amended March 26, 1980.

State of California

Memorandum

To : Huey D. Johnson
Secretary
Resources Agency

Date : May 8, 1980

Subject: Filing of Notice of Decision of the Air Resources Board

From : Air Resources Board

Pursuant to Title 17, Section 60007(b), and in compliance with Air Resources Board certification under section 21080.5 of the Public Resources Code, the Air Resources Board hereby forwards for posting the attached notice of decision and response to environmental comments raised during the comment period.

Sally Rump

Sally Rump
BOARD SECRETARY

attachments

Resolution 80-8
Resolution 80-10
Resolution 80-25

State of California
AIR RESOURCES BOARD

Response to Significant Environmental Issues

Item: Public Hearing to Consider Adoption of Amendments to Title 13, California Administrative Code, Regarding Exhaust Emission Standards for 1981 and 1982 Model Light-Duty Trucks and Medium-Duty Vehicles, 0-3999 Pound Equivalent Inertia Weight and to Consider Conforming Amendments to Assembly-Line Test Procedures.

Public Hearing Date: March 26, 1980

Response Date: March 26, 1980

Issuing Authority: Air Resources Board

Comment: None

Response: N/A

Certified: Sally Rump
Board Secretary

Date: May 8, 1980

State of California
AIR RESOURCES BOARD

RESOLUTION 80-8

April 23, 1980

WHEREAS, Section 39601 of the Health and Safety Code authorizes the Air Resources Board to adopt standards, rules, and regulations necessary for the proper execution of the powers and duties granted to and imposed upon the Board by law;

WHEREAS, Sections 43101 and 43104 of the Health and Safety Code authorize the Board to adopt vehicle emission standards and test procedures in order to control or eliminate air pollution caused by motor vehicles;

WHEREAS, the California Environmental Quality Act and Board regulations require that an activity not be adopted as proposed where the activity will have significant adverse environmental impacts and alternatives or feasible mitigation measures to the proposed activity exist;

WHEREAS, a public hearing and other administrative proceedings have been held in accordance with the provisions of the Administrative Procedure Act (Government Code, Title 2, Division 3, Part 1, Chapter 4.5);

WHEREAS, the Board finds:

That more than 96% of California's 1980 certification fleet complies with the two gram evaporative emission standard without any allowance for non-fuel emissions from paints, plastics, lubricants and rubber components (background emissions);

That vehicle manufacturers are able to reduce and stabilize background emissions through various aging and cleaning techniques;

That the United States Environmental Protection Agency has adopted for 1981 and newer light-duty vehicles and light-duty trucks (includes passenger cars and medium-duty vehicles, respectively), an evaporative emission standard of two grams per test without any allowance for background emissions;

That the background emissions allowance of one gram per test as permitted under current test procedures is not necessary;

That this action will have no significant adverse environmental effects.

NOW, THEREFORE, BE IT RESOLVED, that the Board hereby amends its regulations in Article 2, Subchapter 1, Chapter 3 of Title 13, California Administrative Code as follows:

Amend Section 1976(c) as follows:

1976 [Standards and Test Procedures for Fuel Evaporative Emissions from Gasoline-Powered Vehicles.]

(c) The procedure for determing compliance with these standards is set forth in "California Evaporative Emission Standards and Test Procedures for 1978 and Subsequent Model Gasoline-Powered Motor Vehicles" adopted by the Air Resources Board on April 16, 1975, as amended May 14, 1975, March 31, 1976 October 5, 1976, November 23, 1976, June 8, 1977, December 19, 1977, and October 12, 1979, and April 23, 1980.

BE IT FURTHER RESOLVED, that the Board hereby adopts the "California Evaporative Emission Standards and Test Procedures for 1978 and Subsequent Model Gasoline-Powered Motor Vehicles" dated April 16, 1975, as last amended April 23, 1980.

BE IT FURTHER RESOLVED, that the Board finds that these regulations are, individually and in the aggregate, at least as protective overall of public health as comparable federal regulations

I certify that the above is a true and correct copy of Resolution 80-8, as adopted by the Air Resources Board.

Sally Rump

Sally Rump
Board Secretary

May 8, 1980

State of California
AIR RESOURCES BOARD

Note: These procedures are printed in a style to indicate the adopted changes. New text is underlined and deleted portions are noted.

CALIFORNIA EVAPORATIVE EMISSION STANDARDS AND TEST PROCEDURES FOR 1978 AND SUBSEQUENT MODEL GASOLINE-POWERED MOTOR VEHICLES

ADOPTED: April 16, 1975
AMENDED: May 14, 1975
AMENDED: March 31, 1976
AMENDED: October 5, 1976
AMENDED: November 23, 1976
AMENDED: June 8, 1977
AMENDED: December 19, 1977
AMENDED: October 12, 1979
AMENDED: April 23, 1980

CALIFORNIA EVAPORATIVE EMISSION STANDARDS AND TEST PROCEDURES FOR 1978 AND SUBSEQUENT MODEL GASOLINE-POWERED MOTOR VEHICLES

The provisions of Title 40, Code of Federal Regulations (CFR), Part 86, Subparts A and B, as they pertain to evaporative emission standards and test procedures and as they existed on January 28, 1979 are hereby adopted as the California Evaporative Emission Standards and Test Procedures for 1978 and Subsequent Model Gasoline-Powered Motor Vehicles with the following exceptions and additions:

1. These standards and test procedures are applicable to all new 1978 and subsequent model gasoline-powered passenger cars, light-duty trucks, medium-duty vehicles, heavy-duty vehicles, and motorcycles which are subject to registration and first sold and registered in this state. These standards and test procedures do not apply to motor vehicles which are exempt from exhaust emission certification. The evaporative emission standards for the following classes of vehicles are:

Class of Vehicle	Model Year	Hydrocarbons (grams per test)
Passenger car Light-duty trucks Medium-duty vehicles Heavy-duty vehicles	1978 and 1979	6.0
Passenger cars Light-duty trucks Medium-duty vehicles Heavy-duty vehicles	1980 and subsequent	2.0
Motorcycles	1983 and 1984	6.0
Motorcycles	1985 and subsequent	2.0

2. The definitions in Section 1900, Title 13, California Administrative Code, and in the applicable model year California exhaust emission standards and test procedures, are hereby incorporated into this test procedure by reference.

CALIFORNIA EVAPORATIVE EMISSION STANDARDS AND TEST PROCEDURES FOR 1978 AND SUBSEQUENT MODEL GASOLINE-POWERED MOTOR VEHICLES

The provisions of Title 40, Code of Federal Regulations (CFR), Part 86, Subparts A and B, as they pertain to evaporative emission standards and test procedures and as they existed on January 28, 1979 are hereby adopted as the California Evaporative Emission Standards and Test Procedures for 1978 and Subsequent Model Gasoline-Powered Motor Vehicles with the following exceptions and additions:

1. These standards and test procedures are applicable to all new 1978 and subsequent model gasoline-powered passenger cars, light-duty trucks, medium-duty vehicles, heavy-duty vehicles, and motorcycles which are subject to registration and first sold and registered in this state. These standards and test procedures do not apply to motor vehicles which are exempt from exhaust emission certification. The evaporative emission standards for the following classes of vehicles are:

Class of Vehicle	Model Year	Hydrocarbons (grams per test)
Passenger car Light-duty trucks Medium-duty vehicles Heavy-duty vehicles	1978 and 1979	6.0
Passenger cars Light-duty trucks Medium-duty vehicles Heavy-duty vehicles	1980 and subsequent	2.0
Motorcycles	1983 and 1984	6.0
Motorcycles	1985 and subsequent	2.0

2. The definitions in Section 1900, Title 13, California Administrative Code, and in the applicable model year California exhaust emission standards and test procedures, are hereby incorporated into this test procedure by reference.

3. Approval of medium-duty vehicles shall be based on the same standards and test procedures as light-duty trucks. In selecting medium-duty test vehicles the Executive Officer shall consider the availability of test data from comparably equipped light-duty vehicles and the size of medium-duty vehicles as it relates to the practicability of evaporative emission testing.

4. For all motor vehicles except motorcycles:

Demonstration of system durability and determination of an evaporative emission deterioration factor for each evaporative emission engine family shall be based on tests of representative vehicles and/or systems. For purposes of evaporative emission durability testing a representative vehicle is one which, with the possible exception of the engine and drive train, was built at least three months prior to the commencement of evaporative emission testing, or is one which the manufacturer demonstrates has stabilized non-fuel-related evaporative emissions.

a. For 1978 model evaporative emission engine families which require durability testing for exhaust emissions certification, either

i. Evaporative emission testing shall be conducted on all durability vehicles at the 5,000, 10,000, 20,000, 30,000, 40,000 and 50,000 mile test points. Testing may be performed at more frequent intervals with advance written approval from the Executive Officer. The results of all valid evaporative emission tests within each evaporative emission engine family shall be plotted as a function of mileage, and a least-squares fit straight line shall be drawn through the data. The evaporative emission deterioration factor is defined as the interpolated 50,000 mile value on that line minus the interpolated 4,000 mile value on that line, but in no case shall the factor be less than zero. The interpolated 4,000 and 50,000 mile points on this line must be within the standards of Paragraph 1 or the data will not be acceptable for use in the calculation of a deterioration factor, unless no applicable data point exceeded the standard.

OR

ii. The manufacturer shall propose in his preliminary application for approval a method for durability testing and for determination of a deterioration factor for each evaporative emission engine family. The 4,000 and 50,000 mile test points (or their

equivalents) used in determining the deterioration factor must be within the standards of Paragraph 1 or data will not be acceptable for use in the calculation of a deterioration factor. The Executive Officer shall review the method, and shall approve it if it meets the following requirements:

A. The method must cycle and test the complete evaporative emission control system for the equivalent of at least 50,000 miles of typical customer use.

B. The method must reflect the flow of liquid and gaseous fuel through the evaporative emission control system, and the exposure (both peak and cyclical) to heat, vibration, and ozone expected through 50,000 miles of typical customer use.

C. The method must have the specifications for acceptable system performance, including maximum allowable leakage after 50,000 miles of typical customer use.

No evaporative emission control system durability testing shall be required for 1978 model year vehicles which do not require exhaust emission control system durability testing, unless the Executive Officer determines that durability performance is likely to be significantly inferior to 1977 model year systems.

b. For 1979 and later model evaporative emission engine families, both (4) (a) (i) and (4) (a) (ii) shall apply to all families selected for exhaust emission durability testing, and (4) (a) (ii) shall apply to those evaporative emission engine families which are not subject to testing for exhaust emission durability. The deterioration factors determined under (4) (a) (i), if any, shall be averaged with the deterioration factors determined under (4) (a) (ii) to determine a single evaporative emission deterioration factor for each evaporative emission engine family.

5. Approval of heavy-duty vehicles, excluding medium-duty vehicles, shall be based on an engineering evaluation of the system and data submitted by the applicant. Such evaluation may include successful public usage on light-duty or medium-duty vehicles, adequate capacity of storage containers, routing of lines to prevent siphoning, and other emissions-related factors deemed appropriate by the Executive Officer.

equivalents) used in determining the deterioration factor must be within the standards of Paragraph 1 or data will not be acceptable for use in the calculation of a deterioration factor. The Executive Officer shall review the method, and shall approve it if it meets the following requirements:

A. The method must cycle and test the complete evaporative emission control system for the equivalent of at least 50,000 miles of typical customer use.

B. The method must reflect the flow of liquid and gaseous fuel through the evaporative emission control system, and the exposure (both peak and cyclical) to heat, vibration, and ozone expected through 50,000 miles of typical customer use.

C. The method must have the specifications for acceptable system performance, including maximum allowable leakage after 50,000 miles of typical customer use.

No evaporative emission control system durability testing shall be required for 1978 model year vehicles which do not require exhaust emission control system durability testing, unless the Executive Officer determines that durability performance is likely to be significantly inferior to 1977 model year systems.

b. For 1979 and later model evaporative emission engine families, both (4) (a) (i) and (4) (a) (ii) shall apply to all families selected for exhaust emission durability testing, and (4) (a) (ii) shall apply to those evaporative emission engine families which are not subject to testing for exhaust emission durability. The deterioration factors determined under (4) (a) (i), if any, shall be averaged with the deterioration factors determined under (4) (a) (ii) to determine a single evaporative emission deterioration factor for each evaporative emission engine family.

5. Approval of heavy-duty vehicles, excluding medium-duty vehicles, shall be based on an engineering evaluation of the system and data submitted by the applicant. Such evaluation may include successful public usage on light-duty or medium-duty vehicles, adequate capacity of storage containers, routing of lines to prevent siphoning, and other emissions-related factors deemed appropriate by the Executive Officer.

6. ~~Commencing with~~ For the 1980 model year, the measured evaporative emissions from all test vehicles, except vehicles tested pursuant to paragraph (4) above and motorcycles, shall be corrected for background emissions by subtracting 1.0 grams per test. This correction for background emissions may be extended to include the 1981 model year, on a case-by-case basis, if the Executive Officer finds that a manufacturer has had insufficient lead-time to comply with the April 23, 1980 amendment to this procedure.

7. For the purposes of these test procedures, the following references in 40 CFR, Part 86, Subpart B to light-duty vehicle evaporative testing shall also apply to motorcycles: 86.117-78, and 86.121.78. In addition, 40 CFR, part 86, subparts E, F, and other cited sections of subpart B are incorporated into this test procedure by reference.

8. Certification of a motorcycle evaporative emission control system requires that the manufacturer demonstrate the durability of each evaporative emission control system family.

The motorcycle manufacturer can satisfy the vehicle durability testing requirement by performing an evaporative emission test at each scheduled exhaust emission test (86.427-78) during the motorcycle exhaust emissions certification test (86.424-78) for each evaporative emission family. The minimum mileage accumulated shall be the total test distance (one-half the useful life distance), although the manufacturer may choose to extend the durability test to the useful life distance (86.436-78). The displacement classes and test distances are shown below:

a. i.

Displacement Class	Engine Displacement Range (CC)	Total Test Distance (km)	Useful life Distance (km)
I	50-169	6,000	12,000
II	170-279	9,000	18,000
III	280 and greater	15,000	30,000

ii. All durability vehicles shall be built at least one month before the evaporative emissions test, or the manufacturer must demonstrate that the non-fuel related evaporative emissions have stabilized.

iii. Testing at more frequent intervals than the scheduled exhaust emissions tests may be performed only when authorized in writing by the Executive Officer.

iv. The deterioration factor shall be determined by calculating a least-squares linear regression of the evaporative emissions data with respect to mileage. The deterioration factor is defined as the extrapolated (from the regression) value at the useful life distance minus the interpolated value at the total test distance, where these distances are taken from the table in Paragraph (8)(a)(i).

v. The extrapolated useful life and total test distance emissions shall be less than the applicable evaporative emission standards of Section 1 or the data will not be acceptable for use in the calculation of a deterioration factor.

vi. Motorcycle manufacturers shall also propose in their application a method for durability testing and determination of a deterioration factor for each evaporative emission engine family that is similar to the requirements specified in Paragraph (4) (a) (ii). Any reference to 4,000 miles and 50,000 miles in Paragraph (4) (a) (ii) shall mean total test distance and useful life distance respectively as defined in Paragraph (8)(a)(i) for the appropriate engine displacement class.

vii. The deterioration factor determined under Paragraph (8)(a)(iv) shall be averaged with the deterioration factor determined under Paragraph (8)(a)(vi) to determine a single evaporative emission deterioration factor for each evaporative emission engine family.

viii. The emission label (86.413-78) shall identify the evaporative emission family.

ix. Preconditioning shall be performed in accordance with 86.532-78. The provisions of 86.132-78 which prohibit abnormal system loading during fueling and setting the dynamometer horsepower using a test vehicle shall be observed. Additional preconditioning (86.132-78, 3) may be allowed by the Executive Officer under unusual circumstances.

b. Instrumentation

The instrumentation necessary to perform the motorcycle evaporative emission test is described in 40 CFR, Section 86.107-78 with the following changes:

i. Revise Section (a) (4) to read: Tank fuel heating system. The tank fuel heating system shall consist of two separate heat sources with two temperature controllers. A typical heat source is a pair of heating strips. Other sources may be used as required by circumstances and the Executive Officer may allow manufacturers to provide the

v. The extrapolated useful life and total test distance emissions shall be less than the applicable evaporative emission standards of Section 1 or the data will not be acceptable for use in the calculation of a deterioration factor.

vi. Motorcycle manufacturers shall also propose in their application a method for durability testing and determination of a deterioration factor for each evaporative emission engine family that is similar to the requirements specified in Paragraph (4) (a) (ii). Any reference to 4,000 miles and 50,000 miles in Paragraph (4) (a) (ii) shall mean total test distance and useful life distance respectively as defined in Paragraph (8)(a)(i) for the appropriate engine displacement class.

vii. The deterioration factor determined under Paragraph (8)(a)(iv) shall be averaged with the deterioration factor determined under Paragraph (8)(a)(vi) to determine a single evaporative emission deterioration factor for each evaporative emission engine family.

viii. The emission label (86.413-78) shall identify the evaporative emission family.

ix. Preconditioning shall be performed in accordance with 86.532-78. The provisions of 86.132-78 which prohibit abnormal system loading during fueling and setting the dynamometer horsepower using a test vehicle shall be observed. Additional preconditioning (86.132-78, 3) may be allowed by the Executive Officer under unusual circumstances.

b. Instrumentation

The instrumentation necessary to perform the motorcycle evaporative emission test is described in 40 CFR, Section 86.107-78 with the following changes:

i. Revise Section (a) (4) to read: Tank fuel heating system. The tank fuel heating system shall consist of two separate heat sources with two temperature controllers. A typical heat source is a pair of heating strips. Other sources may be used as required by circumstances and the Executive Officer may allow manufacturers to provide the

heating apparatus for compliance testing. The temperature controllers may be manual, such as variable transformers, or they may be automated. Since vapor and fuel temperature are to be controlled independently, an automatic controller is recommended for the fuel. The heating system must not cause hot spots on the tank wetted surface which could cause local overheating of the fuel or vapor. Heating strips for the fuel, if used, should be located as low as practicable on the tank and should cover at least 10 percent of the wetted surface. The centerline of the fuel heating strips, if used, shall be below 30% of the fuel depth as measured from the bottom of the fuel tank and approximately parallel to the fuel level in the tank. The centerline of the vapor heating strips if used, should be located at the approximate height of the center of the vapor volume. The temperature controller must be capable of controlling the fuel and vapor temperatures to the diurnal heating profile within the specified tolerance.

ii. Revise section (a) (5) (Temperature recording system) to read: In addition to the specifications in this section, the vapor temperature in the fuel tank shall be measured. When the fuel or vapor temperature sensors can not be located in the fuel tank to measure the temperature of the prescribed test fuel or vapor at the approximate mid-volume sensors shall be located at the approximate mid-volume of each fuel or vapor containing cavity. The average of the readings from these sensors shall constitute the fuel or vapor temperature. The fuel and vapor temperature sensors shall be located at least one inch away from any heated tank surface. The Executive Officer may approve alternate sensor locations where the specifications above cannot be met or where tank symmetry provides redundant measurements.

iii. Calibrations shall be performed in accordance with 86.516-78 sections b, c(1), and c(3).

c. Test Procedure

i) The motorcycle exhaust emission test sequence is described in 40 CFR 86.530-78 through 86.540-78. The evaporative emission test shall be accomplished by performing a diurnal evaporative emission test (86.133-78 except sections a(1); K; and p; and neglecting references to windows and luggage compartments) after preconditioning and soak but to cooled to below 30°C after the diurnal test. The "cold" and "hot" start exhaust emission tests shall then be run. The motorcycle will then be returned to the SHED for the hot soak evaporative emission test. This general sequence is shown in figure B78-10 under 86.130-78. The specified time limits shall be followed with the exception of soak times which are specified in 86.53278 for motorcycles.

Running loss tests, when necessary, will be performed in accordance with 86.134-78, except references to 86.135-78 through 86.137-78 shall mean 86.535-78 through 86.537-78.

ii) The fuel and vapor temperatures for the diurnal portion of the evaporative emission test shall conform to the following functions within ± 1.7°C with the tank filled to 50% ± 5 2.5 of its actual capacity, and with the motorcycle resting on its center kickstand (or a similar support) in the vertical position.

$$T_f = (1/3)\ t + 15.5°C$$

$$Tv = (1/3)\ t + 21.0°C$$

where T_f = fuel temperature, °C

Tv = vapor temperature, °C

t = time since the start of the diurnal temperature rise, minutes

c. Test Procedure

i) The motorcycle exhaust emission test sequence is described in 40 CFR 86.530-78 through 86.540-78. The evaporative emission test shall be accomplished by performing a diurnal evaporative emission test (86.133-78 except sections a(1); K; and p; and neglecting references to windows and luggage compartments) after preconditioning and soak but to cooled to below 30°C after the diurnal test. The "cold" and "hot" start exhaust emission tests shall then be run. The motorcycle will then be returned to the SHED for the hot soak evaporative emission test. This general sequence is shown in figure B78-10 under 86.130-78. The specified time limits shall be followed with the exception of soak times which are specified in 86.53278 for motorcycles.

Running loss tests, when necessary, will be performed in accordance with 86.134-78, except references to 86.135-78 through 86.137-78 shall mean 86.535-78 through 86.537-78.

ii) The fuel and vapor temperatures for the diurnal portion of the evaporative emission test shall conform to the following functions within ± 1.7°C with the tank filled to 50% ± 5 2.5 of its actual capacity, and with the motorcycle resting on its center kickstand (or a similar support) in the vertical position.

$$T_f = (1/3)\ t + 15.5°C$$

$$Tv = (1/3)\ t + 21.0°C$$

where T_f = fuel temperature, °C

Tv = vapor temperature, °C

t = time since the start of the diurnal temperature rise, minutes

The test duration shall be 60 ± 2 minutes, giving a fuel and vapor temperature rise of 20°C. The final fuel temperature shall be 35.5 °C ± .5°C.

An initial vapor temperature up to 5°C above 21°C may be used. For this condition the vapor shall not be heated at the beginning of the diurnal test. When the fuel temperature has been raised to 5.5°C below the vapor temperature by following the T_f function the remainder of the vapor heating profile shall be followed.

iii. An alternate temperature rise for the diurnal test may be approved by the Executive Officer. If a manufacturer has information which shows that a particular fuel tank design will change the temperature rise significantly from the function above, the manufacturer may present the information to the Executive Officer for evaluation and consideration.

iv. The hot soak evaporative emission test shall be performed immediately following the "hot" start exhaust emission test. This test is described in 86.138-78, except for item (d) which is revised to require that the motorcycle be pushed with the engine off rather than driven at minimum throttle from the dynamometer to the SHED.

v. Calculations shall be performed in accordance with 86.143-78, except the standard volume for a motorcycle shall be 5 $ft.^3$ instead of 50 ft^3.

d. Motorcycle manufacturers with annual sales of less than 2,000 units for the three displacement classes in California are not required to submit the information specified by these test procedures to the Executive Officer. However, all information required by these test procedures must be retained on file and be made available upon request to the Executive Officer for inspection. These manufacturers shall submit the following information for evaporative emission certification:

i. A brief description of the vehicles to be covered by the Executive Order. (The manufacturer's sales data book or advertising including specifications will satisfy this requirement for most manufacturers.)

ii. A statement signed by an authorized representative of the manufacturer stating "The vehicles described herein have been tested in accordance with the provisions of the 'California Evaporative Emission Standards and Test Procedures For 1978 and Subsequent Model Gasoline-Powerd Motor Vehicles,' and on the basis of those tests are in conformance with the aforementioned standards and test procedures."

Definitions:

Motorcycle Evaporative Emission Family: The group of motorcycle models which meet the criteria of EPA's MSAPC Advisory Circular #59, Section D.

ii. A statement signed by an authorized representative of the manufacturer stating "The vehicles described herein have been tested in accordance with the provisions of the 'California Evaporative Emission Standards and Test Procedures For 1978 and Subsequent Model Gasoline-Powerd Motor Vehicles,' and on the basis of those tests are in conformance with the aforementioned standards and test procedures."

Definitions:

Motorcycle Evaporative Emission Family: The group of motorcycle models which meet the criteria of EPA's MSAPC Advisory Circular #59, Section D.

State of California
AIR RESOURCES BOARD

Response to Significant Environmental Issues

Item: Public Hearing to Consider Changes to Evaporative Emission Regulations for 1981 and Subsequent Model-Year Motor Vehicles.

Public Hearing Date: April 23, 1980

Response Date: April 23, 1980

Issuing Authority: Air Resources Board

Comment: None

Response: N/A

Certified: Sally Rump

Date: May 8, 1980

State of California

Memorandum

To : Huey D. Johnson
Secretary
Resources Agency

Date : May 8, 1980

Subject: Filing of Notice of Decision of the Air Resources Board

From : Air Resources Board

Pursuant to Title 17, Section 60007(b), and in compliance with Air Resources Board certification under section 21080.5 of the Public Resources Code, the Air Resources Board hereby forwards for posting the attached notice of decision and response to environmental comments raised during the comment period.

Sally Rump

Sally Rump
BOARD SECRETARY

attachments
Resolution 80-6
[redacted]
Resolution 80-10
Resolution 80-25

State of California
AIR RESOURCES BOARD

Resolution No. 80-9

WHEREAS, Section 39601 of the Health and Safety Code authorizes the Air Resources Board to adopt standards, rules, and regulations necessary for the proper execution of the powers and duties granted to and imposed upon the Board by law;

WHEREAS, Sections 43101 and 43104 of the Health and Safety Code authorize the Board to adopt vehicle emission standards and test procedures in order to control or eliminate air pollution caused by motor vehicles;

WHEREAS, in the spring of 1979 the Board adopted, as revisions to the State Implementation Plan, a series of locally developed air quality maintenance plans which identified certain mobile source control measures to be considered for future implementation by the Air Resources Board;

WHEREAS, the Board directed the Air Resources Board staff to analyze these measures and to propose amendments to the State Implementation Plan to include for further study those measures found feasible for such study;

WHEREAS, the Board finds that in many areas of the State, emissions reductions beyond those expected to result from existing enforceable regulations will be necessary to attain and maintain national ambient air quality standards for ozone, carbon monoxide and nitrogen dioxide;

WHEREAS, the measures listed below will, if implemented, result in emissions reductions which will help attain and maintain national ambient air quality standards for those pollutants;

WHEREAS, the inclusion of these measures in the State Implementation Plan is necessary to meet the requirements of Section 110(a)(1) and (2) and Section 172(b)(11)(C) of the Clean Air Act;

WHEREAS, a public hearing and other administrative proceedings have been held in accordance with the provisions of the Administrative Procedure Act (Government Code, Title 2, Division 3, Part 1, Chapter 4.5);

NOW, THEREFORE, BE IT RESOLVED, that the Board hereby amends Chapter 4, "Control Strategies" of the California State Implementation Plan to include the ARB's commitment to study the following measures for possible future implementation:

MS-1 Emission Standards - New Off-Road Heavy-Duty Non-Farm Equipment
MS-2 Emission Standards - New Farm Equipment
MS-3 Emission Standards - Lawn and Garden Equipment (Utility)
MS-4 Emission Standards - Off-Road Motorcycles
MS-5 Emission Standards - Pleasure Craft (Boats)
MS-6 Anti-Tampering Regulations - Heavy-Duty Engines (On-Highway)
MS-7 Electric-Powered Vehicles and Stricter Emission Standards for Light-Duty Vehicles
MS-8 100,000 Mile Warranty for Passenger Cars
MS-9 Inspection and Maintenance of Heavy-Duty Vehicles and Motorcycles

BE IT FURTHER RESOLVED, that each study will include, in addition to a determination of its technological feasibility, consideration of the impact of the measure on the economy of the state, potential effects on energy use, and potential emission reductions.

BE IT FURTHER RESOLVED, that the Board directs the Executive Officer to prepare the necessary revision to Chapter 4 and to submit it to the Environmental Protection Agency as a SIP revision.

I certify that the above is a true and correct copy of Resolution 80-9, as passed by the Air Resources Board.

Sally Rump
BOARD SECRETARY

State of California
AIR RESOURCES BOARD

Response to Significant Environmental Issues

Item: Adoption of the Mobile Source Control Division's Proposed Long Range Plan to Study the Feasibility of Controlling Unregulated Mobile Sources.

Public Hearing Date: March 27, 1980

Response Date: March 31, 1980

Issuing Authority: Air Resources Board

Comment: Emissions benefits from regulation of currently unregulated sources will not be as large as those predicted in the staff report.

Response: This is only a proposal for a study. More accurate emissions benefit estimates will be calculated during the study itself.

Certified: Sally Rump
Board Secretary

Date: April 28, 1980

State, of California

Memorandum

To : Huey D. Johnson
Secretary
RESOURCES AGENCY

Date : April 28, 1980

Subject: Filing of Notice of Decision of the Air Resources Board

From : **Air Resources Board**

Pursuant to Title 17, Section 60007(b), and in compliance with Air Resources Board certification under section 21080.5 of the Public Resources Code, the Air Resources Board hereby forwards for posting the attached notice of decision and response to environmental comments raised during the comment period.

Sally Rump
BOARD SECRETARY

attachments
Resolution 80-9

State of California
AIR RESOURCES BOARD

Resolution 80-10

April 23, 1980

WHEREAS, Section 39601 of the Health and Safety Code authorizes the Air Resources Board to adopt standards, rules, and regulations necessary for the proper execution of the powers and duties granted to and imposed upon the Board by law:

WHEREAS, Sections 43101, 43104, and 43210 of the Health and Safety Code authorize the Board to adopt vehicle emission standards and test procedures in order to control or eliminate air pollution caused by motor vehicles;

WHEREAS, the Board's certification procedures for new heavy-duty engines and vehicles currently require a manufacturer to demonstrate that gasoline-powered certification engine or vehicle emissions will remain below the emissions standards adopted by the Board for at least 50,000 miles:

WHEREAS, recent data analyzed by the Board and by the U. S. Environmental Protection Agency indicate that late model gasoline-powered heavy-duty vehicles exceed on average the applicable emission standards long before 50,000 miles have been accumulated:

WHEREAS, these same data indicate that many vehicle owners are either not following the manufacturer's recommended maintenance practices or are disabling or defeating the exhaust emission control systems on their vehicles:

WHEREAS, the Board believes that heavy-duty engine and heavy-duty vehicle manufacturers must take reasonable steps to ensure that their vehicles are not easily susceptible to maladjustment or tampering;

WHEREAS, the Board finds that regulations which minimize the susceptibility of emissions-related components to tampering and maladjustment are, commencing with the 1982 model-year for gasoline-powered heavy-duty engines and vehicles, technologically feasible and necessary to carry out the Legislature's mandate that the Board control and reduce air pollution caused by motor vehicles; and

WHEREAS, the California Environmental Quality Act and Board regulations require that an activity not be adopted as proposed where the activity will have significant adverse environmental impacts and alternatives or feasible mitigation measures to the proposed activity exist;

WHEREAS, the Board finds that this action will have no significant adverse environmental effects;

WHEREAS, a public hearing and other administrative proceedings have been held in accordance with the provisions of the Administrative Procedure Act (Government Code, Title 2, Division 3, Part 1, Chapter 4.5);

NOW, THEREFORE, BE IT RESOLVED, that the Board hereby amends, Section 1956.7, Article 2, Subchapter 1, Chapter 3 of Title 13, California Administrative Code as follows:

Subsection (a) - no change

Amend subsection (b) and (c) and add subsection (d)

(b) The test procedures for determining compliance with 1981 standards are set forth in the "California Exhaust Emission Standards and Test Procedures for 1981 Model Heavy-Duty Engines and Vehicles," adopted April 23, 1980.

(c) The test procedures for determining compliance with standards applicable to 1982 and subsequent are set forth in the "California Exhaust Emission Standards and Test Procedures for 1982 and Subsequent Model Heavy-Duty Engines and Vehicles", adopted October 5, 1976, as last amended April 23, 1980.

(d) A manufacturer may elect to certify heavy-duty vehicles of less than 10,000 pounds maximum gross vehicle weight rating as medium-duty vehicles under Section 1960.1 of this Chapter, in which event heavy-duty emission standards and test procedures shall not apply.

BE IT FURTHER RESOLVED, that the Board hereby adopts the "California Exhaust Emission Standards and Test Procedures for 1981 Model Year Heavy-Duty Engines and Vehicles," adopted April 23, 1980.

BE IT FURTHER RESOLVED, that the Board hereby adopts the "California Exhaust Emission Standards and Test Procedures for 1982 and Subsequent Model Heavy-Duty Engines and Vehicles", adopted October 5, 1976, as amended April 23, 1980.

BE IT FURTHER RESOLVED, that the Board hereby determines that the exhaust emission standards and test procedures adopted herein are, in the aggregate, at least as protective of public health and welfare as applicable federal standards.

I certify that the above is a true and correct copy of Resolution 80-10, as adopted by the Air Resources Board

Sally Rump

Sally Rump
Board Secretary

May 8, 1980

Date

CALIFORNIA EXHAUST EMSSION STANDARDS AND TEST PROCEDURES 1981 MODEL YEAR HEAVY-DUTY ENGINES AND VEHICLES

The provisions of Subparts A and D, Part 86, Title 40, Code of Federal Regulations, as they pertain to heavy-duty engines and vehicles, and as they existed on April 15, 1977 are hereby adopted as the California Exhaust Emission Standards and Test Procedures for 1981 Model Year Heavy-Duty Engines and Vehicles, with the following exceptions and additions:

1. This procedure is applicable to new 1981 model year heavy-duty engines and vehicles. A manufacturer may elect to certify heavy-duty vehicles of 10,000 pounds maximum gross vehicle rating or less as medium-duty vehicles, in which event heavy-duty standards and test procedures will not apply.

2. Definitions.

   a. "Administrator" means the Executive Officer of the Air Resources Board.

   b. "Certificate of Conformity" means "Executive Order" certifying vehicles for sale in California.

   c. "Certification" means certification as defined in Section 39018 of the Health and Safety Code.

   d. "Heavy-duty engine" means an engine which is used to propel a heavy-duty vehicle.

   e. "Heavy-duty vehicle" means any motor vehicle having a manufacturer's gross vehicle weight rating greater than 6,000 pounds, except passenger cars.

   f. "Medium-duty vehicle" means any heavy-duty vehicle having a manufacturer's gross vehicle weight rating of 8500 pounds or less.

3. Any reference to vehicle or engine sales throughout the United States shall mean vehicle or engine sales in California.

CALIFORNIA EXHAUST EMSSION STANDARDS AND TEST PROCEDURES 1981 MODEL YEAR HEAVY-DUTY ENGINES AND VEHICLES

The provisions of Subparts A and D, Part 86, Title 40, Code of Federal Regulations, as they pertain to heavy-duty engines and vehicles, and as they existed on April 15, 1977 are hereby adopted as the California Exhaust Emission Standards and Test Procedures for 1981 Model Year Heavy-Duty Engines and Vehicles, with the following exceptions and additions:

1. This procedure is applicable to new 1981 model year heavy-duty engines and vehicles. A manufacturer may elect to certify heavy-duty vehicles of 10,000 pounds maximum gross vehicle rating or less as medium-duty vehicles, in which event heavy-duty standards and test procedures will not apply.

2. Definitions.

   a. "Administrator" means the Executive Officer of the Air Resources Board.

   b. "Certificate of Conformity" means "Executive Order" certifying vehicles for sale in California.

   c. "Certification" means certification as defined in Section 39018 of the Health and Safety Code.

   d. "Heavy-duty engine" means an engine which is used to propel a heavy-duty vehicle.

   e. "Heavy-duty vehicle" means any motor vehicle having a manufacturer's gross vehicle weight rating greater than 6,000 pounds, except passenger cars.

   f. "Medium-duty vehicle" means any heavy-duty vehicle having a manufacturer's gross vehicle weight rating of 8500 pounds or less.

3. Any reference to vehicle or engine sales throughout the United States shall mean vehicle or engine sales in California.

4. Regulations concerning EPA hearings, EPA inspections, and specific language on the Certificate of Conformity, shall not be applicable to these procedures.

5. For diesel engines and vehicles:

   No durability fleet or smoke emission test will be required and any reference to durability testing shall be optional. No deterioration factor shall be used for calculating the emission test results. The 125 hour test shall be used to determine compliance with the emission standards.

   Evidence must be submitted to the Executive Officer to demonstrate the durability of the emission control system. Such evidence may include durability test data and/or an engineering evaluation of the system. This evaluation shall be based on previous experience and/or similarity to previously certified systems.

6. Durability data submitted pursuant to subparagraph 86.079-24(f) may be from engines previously certified by EPA or ARB.

7. The requirement in subparagraph 86.079-28(b)(4)(i)(B) (durability engines must meet emission standards) shall refer to federal emission standards.

8. Labeling required pursuant to paragraph 86.079-35 and Section 1965, Chapter 3, Title 13 of the California Administrative Code shall conform with the requirements specified in the "California Motor Vehicle Tune-Up Label Specifications."

9. A statement must be supplied that the production engines shall be in all material respects the same as those for which certification was granted.

10. If a gasoline engine manufacturer requires the use of unleaded fuel, a statement will be required that the engine and transmission combinations for which certification is requested are designed to operate satisfactorily on a gasoline having a research octane number not greater than 91.

11. The average brake horsepower at each mode shall be reported for all emission tests.

12. A vehicle manufacturer shall provide the following in its application:

    a. Identification and description of the vehicle models for which certification is requested.

    b. Identification and description of the engines to be used in these vehicle models.

    c. Reference to the engine manufacturer's Executive Order certifying these engines.

13. The following standards represent the maximum projected exhaust emissions from new heavy-duty gasoline engines and the maximum 125-hour test exhaust emissions from new heavy-duty diesel engines:

Exhaust Emission Standards
(grams per brake horsepower hour)

Model Year	Hydrocarbons	Carbon Monoxide	Hydrocarbons Plus Oxides of Nitrogen (NO_2)
1981	1.0	25	6.0
OR*	-	25	5

*The two sets of standards for each model year are alternatives. A manufacturer has the option for each engine family of showing compliance with either set.

Separate deterioration factors shall be established, where applicable, for HC, CO, NOx and/or the combined emissions of HC and NOx.

12. A vehicle manufacturer shall provide the following in its application:

    a. Identification and description of the vehicle models for which certification is requested.

    b. Identification and description of the engines to be used in these vehicle models.

    c. Reference to the engine manufacturer's Executive Order certifying these engines.

13. The following standards represent the maximum projected exhaust emissions from new heavy-duty gasoline engines and the maximum 125-hour test exhaust emissions from new heavy-duty diesel engines:

Exhaust Emission Standards
(grams per brake horsepower hour)

Model Year	Hydrocarbons	Carbon Monoxide	Hydrocarbons Plus Oxides of Nitrogen (NO_2)
1981	1.0	25	6.0
OR*	-	25	5

*The two sets of standards for each model year are alternatives. A manufacturer has the option for each engine family of showing compliance with either set.

Separate deterioration factors shall be established, where applicable, for HC, CO, NOx and/or the combined emissions of HC and NOx.

14. Engine manufacturers may apply durability and/or emission test data from 1979 and earlier model years towards certification for 1981 and subsequent models for similar engines, notwithstanding differences in the instrumentation. In the event that hydrocarbon emission data based on measurements from a nondispersive infrared analyzer are used pursuant to this section, such data shall be multiplied by a factor of 1.5 prior to comparison with the standards.

15. Vehicle manufacturers shall affix a decal on each production vehicle in accordance with Section 43200 of the California Health and Safety Code.

State of California
AIR RESOURCES BOARD

Note: These procedures are printed in a style to indicate the adopted changes. New text is underlined and deleted portions are noted.

CALIFORNIA EXHAUST EMISSION STANDARDS AND TEST PROCEDURES FOR ~~1981~~ 1982 AND SUBSEQUENT MODEL HEAVY-DUTY ENGINES AND VEHICLES

Adopted: October 5, 1976
Amended: November 21, 1977
Amended: March 1, 1978
Amended: May 24, 1978
Amended: April 23, 1980

CALIFORNIA EXHAUST EMISSION STANDARDS
AND TEST PROCEDURES FOR ~~1981~~
1982 AND SUBSEQUENT MODEL
HEAVY-DUTY ENGINES AND VEHICLES

The provisions of Subparts A and D, Part 86, Title 40, Code of Federal Regulations, as they pertain to heavy-duty engines and vehicles, and as they existed on April 15, 1977 are hereby adopted as the California Exhaust Emission Standards and Test Procedures for ~~1981~~ 1982 and Subsequent Model Heavy-Duty Engines and Vehicles, with the following exceptions and additions:

1. This procedure is applicable to new ~~1981~~ 1982 and subsequent model heavy-duty engines and vehicles. A manufacturer may elect to certify heavy-duty vehicles of 10,000 pounds maximum gross vehicle weight rating or less as medium-duty vehicles, in which event heavy-duty standards and test procedures will not apply.

2. Definitions.

   a. "Administrator" means the Executive Officer of the Air Resources Board.

   b. "Certificate of Conformity" means "Executive Order" certifying vehicles for sale in California.

   c. "Certification" means certification as defined in Section 39018 of the Health and Safety Code.

   d. "Heavy-duty engine" means an engine which is used to propel a heavy-duty vehicle.

   e. "Heavy-duty vehicle" means any motor vehicle having a manufacturer's gross vehicle weight rating greater than 6,000 pounds, except passenger cars.

   f. "Medium-duty vehicle" means any heavy-duty vehicle having a manufacturer's gross vehicle weight rating of 8500 pounds or less.

3. Any reference to vehicle or engine sales throughout the United States shall mean vehicle or engine sales in California.

CALIFORNIA EXHAUST EMISSION STANDARDS AND TEST PROCEDURES FOR ~~1981~~ 1982 AND SUBSEQUENT MODEL HEAVY-DUTY ENGINES AND VEHICLES

The provisions of Subparts A and D, Part 86, Title 40, Code of Federal Regulations, as they pertain to heavy-duty engines and vehicles, and as they existed on April 15, 1977 are hereby adopted as the California Exhaust Emission Standards and Test Procedures for ~~1981~~ 1982 and Subsequent Model Heavy-Duty Engines and Vehicles, with the following exceptions and additions:

1. This procedure is applicable to new ~~1981~~ 1982 and subsequent model heavy-duty engines and vehicles. A manufacturer may elect to certify heavy-duty vehicles of 10,000 pounds maximum gross vehicle weight rating or less as medium-duty vehicles, in which event heavy-duty standards and test procedures will not apply.

2. Definitions.

   a. "Administrator" means the Executive Officer of the Air Resources Board.

   b. "Certificate of Conformity" means "Executive Order" certifying vehicles for sale in California.

   c. "Certification" means certification as defined in Section 39018 of the Health and Safety Code.

   d. "Heavy-duty engine" means an engine which is used to propel a heavy-duty vehicle.

   e. "Heavy-duty vehicle" means any motor vehicle having a manufacturer's gross vehicle weight rating greater than 6,000 pounds, except passenger cars.

   f. "Medium-duty vehicle" means any heavy-duty vehicle having a manufacturer's gross vehicle weight rating of 8500 pounds or less.

3. Any reference to vehicle or engine sales throughout the United States shall mean vehicle or engine sales in California.

4. Regulations concerning EPA hearings, EPA inspections, and specific language on the Certificate of Conformity, shall not be applicable to these procedures.

5. For diesel engines and vehicles:

   No durability fleet or smoke emission test will be required and any reference to durability testing shall be optional. No deterioration factor shall be used for calculating the emission test results. The 125 hour test shall be used to determine compliance with the emission standards.

   Evidence must be submitted to the Executive Officer to demonstrate the durability of the emission control system. Such evidence may include durability test data and/or an engineering evaluation of the system. This evaluation shall be based on previous experience and/or similarity to previously certified systems.

6. Durability data submitted pursuant to subparagraph 86.079-24(f) may be from engines previously certified by EPA or ARB.

7. The requirement in subparagraph 86.079-28(b)(4)(i)(B) (durability engines must meet emission standards) shall refer to federal emission standards.

8. Labeling required pursuant to paragraph 86.079-35 and Section 1965, Chapter 3, Title 13 of the California Administrative Code shall conform with the requirements specified in the "California Motor Vehicle Tune-Up Label Specifications."

9. A statement must be supplied that the production engines shall be in all material respects the same as those for which certification was granted.

10. If a gasoline engine manufacturer requires the use of unleaded fuel, a statement will be required that the engine and transmission combinations for which certification is requested are designed to operate satisfactorily on a gasoline having a research octane number not greater than 91.

11. The average brake horsepower at each mode shall be reported for all emission tests.

12. A vehicle manufacturer shall provide the following in its application:

    a. Identification and description of the vehicle models for which certification is requested.

    b. Identification and description of the engines to be used in these vehicle models.

    c. Reference to the engine manufacturer's Executive Order certifying these engines.

13. The following standards represent the maximum projected exhaust emissions from new heavy-duty gasoline engines and the maximum 125-hour test exhaust emissions from new heavy-duty diesel engines:

Exhaust Emission Standards
(grams per brake horsepower hour)

Model Year	Hydrocarbons	Carbon Monoxide	Hydrocarbons Plus Oxides of Nitrogen (NO_2)
~~1981~~	~~1.0~~	~~25~~	~~6.0~~
~~OR*~~	-	~~25~~	~~5~~
1982	1.0	25	6.0
OR*	-	25	5
1983 and subsequent	0.5	25	4.5

*The two sets of standards for each model year are alternatives. A manufacturer has the option for each engine family of showing compliance with either set.

Separate deterioration factors shall be established, where applicable, for HC, CO, NOx and/or the combined emissions of HC and NOx.

12. A vehicle manufacturer shall provide the following in its application:

    a. Identification and description of the vehicle models for which certification is requested.

    b. Identification and description of the engines to be used in these vehicle models.

    c. Reference to the engine manufacturer's Executive Order certifying these engines.

13. The following standards represent the maximum projected exhaust emissions from new heavy-duty gasoline engines and the maximum 125-hour test exhaust emissions from new heavy-duty diesel engines:

Exhaust Emission Standards
(grams per brake horsepower hour)

Model Year	Hydrocarbons	Carbon Monoxide	Hydrocarbons Plus Oxides of Nitrogen (NO_2)
~~1981~~ OR*	~~1.0~~ -	~~25~~ 25	~~6.0~~ 5
1982 OR*	1.0 -	25 25	6.0 5
1983 and subsequent	0.5	25	4.5

*The two sets of standards for each model year are alternatives. A manufacturer has the option for each engine family of showing compliance with either set.

Separate deterioration factors shall be established, where applicable, for HC, CO, NOx and/or the combined emissions of HC and NOx.

14. Engine manufacturers may apply durability and/or emission test data from 1979 and earlier model years towards certification for ~~1981~~ 1982 and subsequent models for similar engines, notwithstanding differences in the instrumentation. In the event that hydrocarbon emission data based on measurements from a nondispersive infrared analyzer are used pursuant to this section, such data shall be multiplied by a factor of 1.5 prior to comparison with the standards.

15. Vehicle manufacturers shall affix a decal on each production vehicle in accordance with Section 43200 of the California Health and Safety Code.

16. For gasoline engines and vehicles:

a. The mechanism for adjusting the idle air/fuel mixture, if any, shall be designed so that either:

i. The mixture adjustment mechanism is not visible, even with the air cleaner removed, and special tools and/or procedures are required to make adjustments; or

ii. In the alternative, the Executive Officer may, upon reasonable notice to the manufacturer, require that a certification test of an engine or vehicle be conducted with the idle air/fuel mixture at any setting which the Executive Officer finds corresponds to settings likely to be encountered in actual use. The Executive Officer, in making this finding, shall consider the difficulty of making adjustments, damage to the carburetor in the event of any effort to make an improper adjustment, and the need to replace parts following the adjustment.

b. The manufacturer shall submit for approval by the Executive Officer the proposed method of compliance with this requirement in its preliminary application for certification.

c. The Executive Officer may, on a case-by-case basis, exempt from the requirements of this section engines which use carburetors substantially different in design from carburetors used on light or medium-duty vehicles and which the manufacturer demonstrates cannot be made to comply with this section within the available lead time. Such exemptions shall only apply to the 1982 model year.

State of California
AIR RESOURCES BOARD

Response to Significant Environmental Issues

Item: Public Hearing to Consider Amendments to Title 13, California Administrative Code, Regarding Parameter Adjustment of Idle Air/Fuel Mixtures on Heavy Duty Engines.

Public Hearing Date: April 23, 1980

Response Date: April 23, 1980

Issuing Authority: Air Resources Board

Comment: None

Response: N/A

Certified: Sally Rump

Date: May 8, 1980

State of California

Memorandum

To : Huey D. Johnson
Secretary
Resources Agency

Date : May 8, 1980

Subject: Filing of Notice of Decision of the Air Resources Board

From : Air Resources Board

Pursuant to Title 17, Section 60007(b), and in compliance with Air Resources Board certification under section 21080.5 of the Public Resources Code, the Air Resources Board hereby forwards for posting the attached notice of decision and response to environmental comments raised during the comment period.

Sally Rump

Sally Rump
BOARD SECRETARY

attachments
Resolution 80-6
Resolution 80-8
[redacted]
Resolution 80-25

State of California
AIR RESOURCES BOARD

Resolution 80-11

March 6, 1980

WHEREAS, the South Coast Air Quality Management District has proposed to include in its new source review rule provisions, including a definition of Coastal Waters, intended to insure that off-shore emissions do not have an adverse impact on air quality within the South Coast Air Basin; and

WHEREAS, the Air Resources Board fully supports and endorses these provisions and finds that their inclusion is both appropriate and proper under State and federal law and is necessary to provide for the attainment and maintenance of State and federal ambient air quality standards; and

WHEREAS, these provisions are subject to court challenge; and

WHEREAS, sustaining the validity of these provisions is a matter of statewide concern.

NOW THEREFORE BE IT RESOLVED that in the event these provisions are challenged in court, the Air Resources Board directs its Executive Officer to provide the resources necessary to assist in defending such a challenge to the extent that the South Coast Air Quality Management District requests the Air Resources Board's participation.

I certify that the above is a true and correct copy of Resolution 80-11, as adopted by the Air Resources Board.

Sally Rump

Sally Rump
Board Secretary

PROPOSED

State of California
AIR RESOURCES BOARD

Resolution 80-11

March 6, 1980

WHEREAS, the South Coast Air Quality Management District has proposed to include in its new source review rule provisions, including a definition of Coastal Waters, intended to insure that off-shore emissions do not have an adverse impact on air quality within the South Coast Air Basin; and

WHEREAS, the Air Resources Board fully supports and endorses these provisions and finds that their inclusion is both appropriate and proper under State and federal law and is necessary to provide for the attainment and maintenance of State and federal ambient air quality standards; and

WHEREAS, these provisions are subject to court challenge; and

WHEREAS, sustaining the validity of these provisions is a matter of statewide concern.

NOW THEREFORE BE IT RESOLVED that in the event these provisions are challenged in court, the Air Resources Board will provide legal resources to assist and cooperate with the South Coast Air Quality Management District in defending them upon request by the SCAQMD.

N. Matthews

April 4, 1980

Steve Broiles
Chief Counsel
South Coast Air Quality
Management District
9150 E. Flair Drive
El Monte, CA 91731

Dear Mr. Broiles:

Thank you for pointing out the typographical error in Resolution 80-11 adopted by our Board on March 6, 1980. We have made the correction and I am enclosing a corrected copy of that resolution.

If you have any questions please call me at (916) 322-8267.

Sincerely,

Nangy Matthews
Air Resources Engineer

Enclosure

bcc: Sally Rump

N. Matthews/ln

State of California

AIR RESOURCES BOARD

Resolution 80-12

March 26, 1980

WHEREAS, an unsolicited research Proposal Number 888-75 entitled "Effects of Air Pollution on Airway Function" has been submitted by the University of California at San Francisco to the Air Resources Board; and

WHEREAS, the Research staff has reviewed and recommended this proposal for approval; and

WHEREAS, the Research Screening Committee has reviewed and recommends for funding:

> Proposal Number 888-75 entitled "Effects of Air Pollution on Airway Function" submitted by the University of California at San Francisco for an amount not to exceed $95,987;

NOW, THEREFORE, BE IT RESOLVED, that the Air Resources Board pursuant to the authority granted by Health and Safety Code Section 39703, hereby accepts the recommendation of the Research Screening Committee and approves the following:

> Proposal Number 888-75 entitled "Effects of Air Pollution on Airway Function" submitted by the University of California at San Francisco for an amount not to exceed $95,987,

BE IT FURTHER RESOLVED, that the Executive Officer shall initiate administrative procedures and execute all necessary documents and contracts for the research effort proposed in an amount not to exceed $95,987.

I certify that the above is a true and correct copy of Resolution 80-12, as passed by the Air Resources Board.

Sally Rump

Sally Rump
BOARD SECRETARY

State of California
AIR RESOURCES BOARD

ITEM NO: 80-5-5
DATE: March 26, 1980

ITEM: Research Proposal No. 888-75 entitled "Effects of Air Pollution on Airway Function".

RECOMMENDATION: Adopt Resolution 80-12 approving Research Proposal No. 888-75 for funding in an amount not to exceed $95,987.

SUMMARY: The proponent has recently completed studies on human subjects that showed increased airway resistance following short exposures to levels of sulfur dioxide not previously believed important to health.

This proposal consists of two groups of studies. The first would follow-up the proponent's most recent research showing that some asthmatics were sensitive to a single 1-ppm exposure to SO_2 for 10 minutes. This response level is below what has been reported by other researchers using even longer exposure periods. A major objective of this study is to determine the threshold level of SO_2 exposure associated with increased airway resistance and to determine whether repeated SO_2 exposures lessen the magnitude of response.

A second related effort involves repeated SO_2 exposures of well-characterized human subjects who show mild asthma. Subjects will be given doses of 3 ppm SO_2 over a 15-minute period on each of four consecutive days. Airway resistance measurements will be made before and after the exposure. The collected data will be studied in terms of any possible lessening of functional response to the pollutant. Histamine responsiveness will also be studied before and after the repeated SO_2 exposure. Pharmacologic research would also be done to determine which neurological pathways are involved in the SO_2 response.

The group II studies focus on the effects of combined ozone - SO_2 insults on mucus secretion rates in dogs. Mucus secretion rates have been shown to vary with exposure to certain air pollutants. It is also generally accepted that mucus is an important factor in the removal of foreign matter from the lung as well as in defense against infection.

State of California

AIR RESOURCES BOARD

Resolution 80-13

March 26, 1980

WHEREAS, an unsolicited research Proposal Number 889-75 entitled "Size-Selective Samplers for Particulate Monitoring in California" has been submitted by the Air and Industrial Hygiene Laboratory, California Department of Health Services, to the Air Resources Board; and

WHEREAS, the Research staff has reviewed and recommended this proposal for approval; and

WHEREAS, the Research Screening Committee has reviewed and recommends for funding:

> Proposal Number 889-75 entitled "Size-Selective Samplers for Particulate Monitoring in California" submitted by the Air and Industrial Hygiene Laboratory, California Department of Health Services for an amount not to exceed $82,398;

NOW, THEREFORE, BE IT RESOLVED, that the Air Resources Board, pursuant to the authority granted by Health and Safety Code Section 39703, hereby accepts the recommendation of the Research Screening Committee and approves the following:

> Proposal Number 889-75 entitled "Size-Selective Samplers for Particulate Monitoring in California" submitted by the Air and Industrial Hygiene Laboratory, California Department of Health Services for an amount not to exceed $82,398;

BE IT FURTHER RESOLVED, that the Executive Officer shall initiate administrative procedures and execute all necessary documents and contracts for the research effort proposed in an amount not to exceed $82,398.

I certify that the above is a true and correct copy of Resolution 80-13, as passed by the Air Resources Board.

Sally Rump

Sally Rump
BOARD SECRETARY

State of California
AIR RESOURCES BOARD

ITEM NO: 80-5-5
DATE: March 26, 1980

ITEM: Research Proposal No. 889-75 entitled "Size-Selective Samplers for Particulate Monitoring in California".

RECOMMENDATION: Adopt Resolution 80-13 approving research proposal No. 889-75 for funding in an amount not to exceed $82,398.

SUMMARY:

The importance of size-selective monitoring of particulate matter in the ambient air has become increasingly apparent. At a workshop entitled "A California Ambient Air Quality Standard for Inhalable Particles" held in May of 1979, a committee of experts concluded that size-selective monitoring should be instituted throughout the State, and that information on the concentration of airborne particulate matter in the 2.5-15 μm and the 0-2.5 μm size ranges should be collected. This information along with associated health effects is needed for the standard-setting process. In addition, particle size information is an important tool in determining the origins of ambient aerosols.

The objectives of this project are to provide the ARB with technical support for fine particle monitoring by characterizing and validating candidate samplers. Specifically, this project will provide for: 1) laboratory testing of the newly developed size-selective hi-vol sampler and critical assessment of all available data relating to the sampler; 2) modification and characterization of the AIHL cyclone sampler.

These two samplers were selected for evaluation and development based on the outstanding characteristics displayed in preliminary testing. The size-selective hi-vol appears to be well suited to sampling inhalable particles (less than 15 μ) and the AIHL cyclone is ideally suited to collection of respirable particles (less than 2.5 μ in diameter).

This study will provide the information needed for the State to decide which of the available fine particle samplers should be used in California.

State of California

AIR RESOURCES BOARD

Resolution 80-14

March 26, 1980

WHEREAS, an unsolicited research Proposal Number 906-75 entitled "Assessment of Simultaneous Use of NO_x Control Systems on Stationary Sources" has been submitted by the Aerospace Corporation to the Air Resources Board; and

WHEREAS, the Research staff has reviewed and recommended this proposal for approval; and

WHEREAS, the Research Screening Committee has reviewed and recommends for funding:

> Proposal Number 906-75 entitled "Assessment of Simultaneous Use of NO_x Control Systems on Stationary Sources" submitted by the Aerospace Corporation for an amount not to exceed $99,642;

NOW, THEREFORE, BE IT RESOLVED, that the Air Resources Board, pursuant to the authority granted by Health and Safety Code Section 39703, hereby accepts the recommendation of the Research Screening Committee and approves the following:

> Proposal Number 906-75 entitled "Assessment of Simultaneous Use of NO_x Control Systems on Stationary Sources" submitted by the Aerospace Corporation for an amount not to exceed $99,642;

BE IT FURTHER RESOLVED, that the Executive Officer shall initiate administrative procedures and execute all necessary documents and contracts for the research effort proposed in an amount not to exceed $99,642.

I certify that the above is a true and correct copy of Resolution 80-14, as passed by the Air Resources Board.

Sally Rump

Sally Rump
BOARD SECRETARY

State of California
AIR RESOURCES BOARD

ITEM NO: 80-5-5
DATE: March 26, 1980

ITEM: Research Proposal No. 906-75 entitled "Assessment of Simultaneous Use of NO_x Control Systems on Stationary Sources".

RECOMMENDATION: Adopt Resolution 80-14 approving Research Proposal No. 906-75 for funding in an amount not to exceed $99,642.

SUMMARY: The objective of this research project is to study the capability of currently available technology to reduce NO_x emissions from specified sources below the levels achievable by combustion modifications alone. This technology includes thermal deNO_x (TDN), selective catalytic reduction (SCR) and low NO_x burners (LNB). The first two use ammonia for NO_x reduction; LNB uses burners designed for more effective control of the fuel-air mixture. While SCR can achieve 90 percent NO_x removal, these systems are expensive and may be difficult to retrofit on existing installations. However, the simultaneous application of TDN and SCR, at a reduced capacity, size and cost, may achieve 90 percent NO_x reduction at a cost less than that of SCR alone. Further, the concurrent use of LNB, either alone, with, or in combination with TDN and SCR, may be more energy efficient and cost-effective. The sources to be investigated include refinery and industrial boilers, refinery heaters, a refinery CO boiler and a glass furnace.

The contractor will study the interactions of the above-mentioned NO_x reduction systems when they are used simultaneously, and the potential reductions and associated costs when the systems are used in varying capacities within a system.

The information and data generated by this study should enable staff and local districts to develop cost-effective strategies for the reduction of NO_x emissions from the sources listed above.

State of California

AIR RESOURCES BOARD

Resolution 80-15

April 24, 1980

WHEREAS, an unsolicited research Proposal Number 892-75 entitled "Air Quality and Birth Outcome, South Coast Air Basin" has been submitted by the University of California at Los Angeles to the Air Resources Board; and

WHEREAS, the Research staff has reviewed and recommended this proposal for approval; and

WHEREAS, the Research Screening Committee has reviewed and recommends for funding:

> Proposal Number 892-75 entitled "Air Quality and Birth Outcome, South Coast Air Basin" submitted by the University of California at Los Angeles for an amount not to exceed $157,521;

NOW, THEREFORE, BE IT RESOLVED, that the Air Resources Board pursuant to the authority granted by Health and Safety Code Section 39703, hereby accepts the recommendation of the Research Screening Committee and approves the following:

> Proposal Number 892-75 entitled "Air Quality and Birth Outcome, South Coast Air Basin" submitted by the University of California at Los Angeles for an amount not to exceed $157,521,

BE IT FURTHER RESOLVED, that the Executive Officer shall initiate administrative procedures and execute all necessary documents and contracts for the research effort proposed in an amount not to exceed $157,521.

I certify that the above is a true and correct copy of Resolution 80-15 as passed by the Air Resources Board.

Sally Rump

Sally Rump
Board Secretary

State of California
AIR RESOURCES BOARD

ITEM NO: 80-7-3
DATE: April 24, 1980

ITEM: Research Proposal No. 892-75 entitled "Air Quality and Birth Outcome: South Coast Air Basin."

RECOMMENDATION: Adopt Resolution 80-15 approving Research Proposal No. 892-75 for funding in an amount not to exceed $157,521.

SUMMARY: This proposal was considered by the Board at its March 26, 1980 meeting, at which the Board deferred approval of the proposal pending formation of a committee of epidemiologists and statisticians to guide the study. Such a committee has been formed and the members and their affiliations follows the summary of the proposal presented below.

Numerous epidemiological studies have been carried out to determine how medium-to-long term exposure to air pollution affects the general population as well as identifiable sensitive sub-groups within the general population. Asthmatics, children, heart and lung disease patients are among these sub-groups.

Another research area of importance has been the potential effects of ambient air quality on birth outcome. Animal studies tentatively point to the possibility that nitrogen dioxide and certain other air pollutants play a role in birth outcome. The few human studies done in this area seem to suggest an air quality-birth outcome relationship, but have generated more questions than they have answers. What is proposed here is a more thorough study that might help answer the basic question "Does air pollution exposure affect birth weight, fetal development, congenital malformation rate and survival into early infancy?"

The project as proposed would assess whether or not there exists an association between levels and/or types of air pollution and reproductive success. Study areas would include the four counties of the South Coast Air Basin - Orange, Los Angeles, Riverside and San Bernardino. The period for study would include 1972-1978, a time that would include about one million births. Air quality information would

come from the South Coast Air Quality Management District and ARB. The air quality data would be used after application of exposure interpolation methods to give time relation exposure estimates on a small-scale spatial basis. The methods developed by Technology Services Corporation in a recently completed study for ARB would be the most likely approach. Pollutant exposures would be derived on an individual basis for all births. Variations in exposures received by mothers on a monthly basis will also be considered. In this way any relationship between stage of pregnancy and sensitivity to exposure might be shown. Areas with similar air pollution exposures will be grouped in some parts of the study. This would allow study of how factors such as social or economic status, prenatal care and racial make-up influence any birth outcome - air quality trends.

A guidance committee has been selected to assist the principal investigator on this project. Members represent two basic areas of expertise, either epidemiology or biostatistics. The members and their affiliations are listed below:

1. Heinz Berendes - Chief, Epidemiology and Biometry
   National Institute of Child Health and Human Development

2. Warren Winkelstein - Dean, School of Public Health
   University of California, Berkeley

3. Lou Mahoney - Director, San Bernardino County Health Department

4. Alice Whittemore - Department of Family, Community and Preventative Medicine
   Stanford Medical School

5. Jean Bowman - Health Program Advisor
   State Department of Health Services

State of California

AIR RESOURCES BOARD

Resolution 80-16

March 26, 1980

WHEREAS, an unsolicited research Proposal Number 905-75 entitled "Direct Measurement of Nitrous Acid, Nitrogen Dioxide and Formaldehyde in Auto Exhaust by Differential Optical Absorption Spectroscopy" has been submitted by the Statewide Air Pollution Research Center, University of California, Riverside to the Air Resources Board; and

WHEREAS, the Research staff has reviewed and recommended this proposal for approval; and

WHEREAS, the Research Screening Committee has reviewed and recommends for funding:

> Proposal Number 905-75 entitled "Direct Measurement of Nitrous Acid, Nitrogen Dioxide and Formaldehyde in Auto Exhaust by Differential Optical Absorption Spectroscopy" submitted by the Statewide Air Pollution Research Center, University of California, Riverside for an amount not to exceed $98,488;

NOW, THEREFORE, BE IT RESOLVED, that the Air Resources Board pursuant to the authority granted by Health and Safety Code Section 39703, hereby accepts the recommendation of the Research Screening Committee and approves the following:

> Proposal Number 905-75 entitled "Direct Measurement of Nitrous Acid, Nitrogen Dioxide, and Formaldehyde in Auto Exhaust by Differential Optical Absorption Spectroscopy" submitted by the Statewide Air Pollution Research Center, University of California, Riverside for an amount not to exceed $98,488.

BE IT FURTHER RESOLVED, that the Executive Officer shall initiate administrative procedures and execute all necessary documents and contracts for the research effort proposed in an amount not to exceed $98,488.

I certify that the above is a true and correct copy of Resolution 80-16, as passed by the Air Resources Board.

Sally Rump

Sally Rump
BOARD SECRETARY

State of California
AIR RESOURCES BOARD

ITEM NO: 80-5-5
DATE: March 26, 1980

ITEM: Research Proposal No. 905-75 entitled "Direct Measurement of Nitrous Acid, Nitrogen Dioxide and Formaldehyde in Auto Exhaust by Differential Optical Absorbtion Spectroscopy."

RECOMMENDATION: Adopt Resolution 80-16 approving Research Proposal 905-75 for funding in an amount to to exceed $98,488.

SUMMARY: Formaldehyde (HCHO) and nitrous acid (HONO) are key compounds in initiating and promoting the formation of photochemical smog. Because of the importance of the role of these compounds in smog formation it is desirable that reliable data for the emissions of these compounds be obtained. One significant source is believed to be the automobile. However, real-time measurement of formaldehyde in the exhaust of light-duty motor vehicles has been difficult and unreliable, and there are no published data for nitrous acid from auto exhaust whatsoever.

This proposal concerns the application of a new technique, differential optical absorption spectroscopy to measurement of HONO, HCHO, and NO_2 (as contrasted with total NO_x) in auto exhaust.

The specific objectives are:

To construct a prototype differential optical absorption spectrophotometer and, subsequently, to evaluate its effectiveness as a research instrument for the analysis of HONO, HCHO and NO_2 in exhaust gases.

To study the concentrations of HCHO, HONO and NO_2 emission rates as functions of engine operating conditions, emission control equipment (and its state of repair) as well as fuel composition. Testing on auto exhausts will be done at the Board's Haagen-Smit Laboratory in cooperation with the ARB staff.

State of California

AIR RESOURCES BOARD

Resolution 80-17

March 26, 1980

WHEREAS, a solicited research Proposal Number 886-75 entitled "Controls for Fine-Particle Emissions from Industrial Sources in California" has been sumbitted by Air Pollution Technology, Inc. to the Air Resources Board; and

WHEREAS, the Research staff has reviewed and recommended this proposal for approval; and

WHEREAS, the Research Screening Committee has reviewed and recommends for funding:

> Proposal Number 886-75 entitled "Controls for Fine-Particle Emissions from Industrial Sources in California" submitted by Air Pollution Technology, Inc. for an amount not to exceed $150,000;

NOW, THEREFORE, BE IT RESOLVED, that the Air Resources Board, pursuant to the authority granted by Health and Safety Code Section 39703, hereby accepts the recommendation of the Research Screening Committee and approves the following:

> Proposal Number 886-75 entitled "Controls for Fine-Particle Emissions from Industrial Sources in California" submitted by Air Pollution Technology, Inc. for an amount not to exceed $150,000,

BE IT FURTHER RESOLVED, that the Executive Officer shall initiate administrative procedures and execute all necessary documents and contracts for the research effort proposed in an amount not to exceed $150,000.

I certify that the above is a true and correct copy of Resolution 80-17, as passed by the Air Resources Board.

Sally Rump

Sally Rump
BOARD SECRETARY

State of California
AIR RESOURCES BOARD

ITEM NO: 80-5-5
DATE: March 26, 1980

ITEM: Research Proposal No. 886-75 entitled "Control For Fine Particle Emissions from Industrial Sources In California".

RECOMMENDATION: Adopt Resolution 80-17 approving Research Proposal No. 886-75 for funding in an amount not to exceed $150,000.

SUMMARY:

Fine particle emissions from industrial sources are of concern because they affect both health and visibility in the atmosphere. The major industrial sources for these fine particles (equivalent aerodynamic diameters of three micrometers or less) include fuel combustion, mineral and metallurgical operations, and food and agricultural operations. Particles less than one micrometer in diameter have the greatest effect on visibility. In addition, particles in this size range evade the normal barriers in the respiratory system and are inhaled deeply into the lungs.

With the guidance of the Research Screening Committee, the staff prepared and released a Request For Proposals for this project. Three responses were received, of which the proposal by Air Pollution Technology, Inc. was judged to be most meritorious by the staff and the Committee.

The objectives of this study are to determine the effectiveness and cost of control devices for fine particle emissions from the major industrial sources cited above and other sources.

Both new installations and retrofits of existing facilities are to be considered. Emerging technologies, such as the simultaneous control of both sulfur oxides and fine particle emissions by the addition of ground calcareous material, followed by filtration, are to be evaluated.

State of California

AIR RESOURCES BOARD

Resolution 80-18

March 26, 1980

WHEREAS, a solicited research Proposal Number 900-75 entitled "Control Techniques for Organic Gas Emissions from Fiberglass Impregnation and Fabrication Processes" has been submitted by Science Applications, Inc., to the Air Resources Board; and

WHEREAS, the Research staff has reviewed and recommended this proposal for approval; and

WHEREAS, the Research Screening Committee has reviewed and recommends for funding:

> Proposal Number 900-75 entitled "Control Techniques for Organic Gas Emissions from Fiberglass Impregnation and Fabrication Processes" submitted by Science Applications, Inc., for an amount not to exceed $74,945;

NOW, THEREFORE, BE IT RESOLVED, that the Air Resources Board pursuant to the authority granted by Health and Safety Code Section 39703, hereby accepts the recommendation of the Research Screening Committee and approves the following:

> Proposal Number 900-75 entitled "Control Techniques for Organic Gas Emissions from Fiberglass Impregnation and Fabrication Processes" submitted by Science Applications, Inc., for an amount not to exceed $74,945,

BE IT FURTHER RESOLVED, that the Executive Officer shall initiate administrative procedures and execute all necessary documents and contracts for the research effort proposed in an amount not to exceed $74,945.

I certify that the above is a true and correct copy of Resolution 80-18, as passed by the Air Resources Board.

Sally Rump

Sally Rump
BOARD SECRETARY

State of California
AIR RESOURCES BOARD

ITEM NO: 80-5-5
DATE: March 26, 1980

ITEM: Research Proposal No. 900-75 entitled "Control Techniques for Organic Gas Emissions from Fiberglass Impregnation and Fabrication Processes."

RECOMMENDATION: Adopt Resolution 80-18 approving Research Proposal No. 900-75 for funding in an amount not to exceed $74,945.

SUMMARY:

Gaseous emissions from the fabrication of polyester-impregnated glass matrices contribute directly to the formation of atmospheric ozone, as well as create local odor problems. There are also concerns about possible health hazards resulting from such volatile organic emissions. These gaseous emissions consist primarily of styrene monomer which is used as a diluent and cross linker for the polyester resin system.

Because OSHA has established a maximum work-place concentration of 100 ppm for styrene, fabricators have installed hoods around the lay-up work areas, which vent the styrene directly to the atmosphere. Control devices such as adsorbers and incinerators will reduce emissions from such plants, but the cost of installation and upkeep are prohibitively high for small producers. For this reason, local districts have exempted styrene emissions below an arbitrarily established weight limit from control.

At the request of the Stationary Source Control Division, Research staff prepared a Request for Proposals (RFP) to inventory statewide emissions from fiberglass impregnation and fabrication operations and to research methods for mitigation and control. The Research Screening Committee approved the RFP which was then released to approximately 90 prospective bidders. Five responses were received of which the proposal by Science Applications, Inc., was judged to be most pertinent by the staff and the Committee.

The objectives of this study are to inventory statewide organic gas emissions from fiberglass impregnation and fabrication operations. Concurrently the contractor will assess the effectiveness of process modifications for reducing emissions and will also

State of California

AIR RESOURCES BOARD

Resolution 80-19

March 26, 1980

WHEREAS, a solicited research Proposal Number 893-75 entitled "Study of Visible Emissions from Ships with Steam Boilers" has been submitted by the Acurex Corporation to the Air Resources Board; and

WHEREAS, the Research staff has reviewed and recommended this proposal for approval; and

WHEREAS, the Research Screening Committee has reviewed and recommends for funding:

> Proposal Number 893-75 entitled "Study of Visible Emission from Ships with Steam Boilers" submitted by the Acurex Corporation for an amount not to exceed $99,848;

NOW, THEREFORE, BE IT RESOLVED, that the Air Resources Board pursuant to the authority granted by Health and Safety Code Section 39703, hereby accepts the recommendation of the Research Screening Committee and approves the following:

> Proposal Number 893-75 entitled "Study of Visible Emissions from Ships with Steam Boilers" submitted by the Acurex Corporation for an amount not to exceed $99,848,

BE IT FURTHER RESOLVED, that the Executive Officer shall initiate administrative procedures and execute all necessary documents and contracts for the research effort proposed in an amount not to exceed $99,848.

I certify that the above is a true and correct copy of Resolution 80-19, as passed by the Air Resources Board.

Sally Rump

Sally Rump
BOARD SECRETARY

State of California
AIR RESOURCES BOARD

ITEM NO: 80-5-5
DATE: March 26, 1980

ITEM: Research Proposal No. 893-75 entitled "Study of Visible Emissions from Ships with Steam Boilers."

RECOMMENDATION: Adopt Resolution 80-19 approving Research Proposal No. 893-75 for funding in an amount not to exceed $99,848.

SUMMARY: The California Legislature has requested the Air Resources Board to conduct a study of the compliance of ships with the California statutes prohibiting visible emission exceeding specified opacity standards for more than three minutes in any one-hour period unless exempted. Exemptions include vessels using steam boilers subject to emergency shut downs for safety reasons, and for specified tests and maneuvering. The legislature also requested that, following completion of this study, the ARB conduct a public hearing to consider adoption of, and adopt if appropriate, a compliance schedule which would require vessels to comply with statutory standards on and after January 1, 1984. The Board must also transmit the results of study to the Legislature by January 1, 1983.

ARB staff prepared a Request for Proposals (RFP) and upon approval of the Research Screening Committee, sent the RFP to 90 prospective contractors. Five responses were received of which the proposal from the Acurex Corporation was judged to be most meritorious by the staff and the committee.

The objectives of the research project are to survey ship operations relevant to the visible emission exemption conditions and to develop recommendations for a compliance schedule to reduce such emissions. Specifically, the contractor will conduct a study to determine whether vessels using steam boilers can be brought into compliance with Section 41701 of the California Health and Safety Code by January 1, 1984, or any earlier date, taking into account the age and physical condition of the affected vessels, vessel safety and operational requirements, and technological feasibility. The study will also include the extent, frequency, nature, environmental impact, and causes of visible emissions from vessels under conditions described in Section 41704 of the Health and Safety Code.

State of California

AIR RESOURCES BOARD

Resolution 80-20

March 26, 1980

WHEREAS, a solicited research Proposal Number 902-75 entitled "A Study of the Origin and Fate of Air Pollutants in California's Sacramento Valley" has been submitted by the Meteorology Research Inc., ($159,966) to the Air Resources Board; with a contribution from the California Institute of Technology ($139,979) for a total amount not to exceed ($299,945); and

WHEREAS, the Research staff has reviewed and recommended this proposal for approval; and

WHEREAS, the Research Screening Committee has reviewed and recommends for funding:

> Proposal Number 902-75 entitled "A Study of the Origin and Fate of Air Pollutants in California's Sacramento Valley" submitted by the Meteorology Research, Inc. ($159,966) with a contribution from the California Institute of Technology ($139,979) for a total amount not to exceed ($299,945); and

WHEREAS, the Research staff and the Research Screening Committee recommend that separate contracts be awarded to Meteorology Research, Inc., and the participating contractor in order to minimize the cost to the State;

NOW, THEREFORE, BE IT RESOLVED, that the Air Resources Board pursuant to the authority granted by Health and Safety Code Section 39703, hereby accepts the recommendation of the Research Screening Committee and approves the following:

> Proposal Number 902-75 entitled "A Study of the Origin and Fate of Air Pollutants in California's Sacramento Valley", submitted by the Meteorology Research, Inc. ($159,966), with a contribution from the California Institute of Technology ($139,979), for a total amount not to exceed $299,945;

BE IT FURTHER RESOLVED, that the Executive Officer shall initiate administrative procedures and execute all necessary documents and contracts individually with each of the contractors for the research effort proposed in a total amount not to exceed $299,945 for both contracts.

I certify that the above is a true and correct copy of Resolution 80-20, as passed by the Air Resources Board.

Sally Rump

Sally Rump
BOARD SECRETARY

State of California
AIR RESOURCES BOARD

ITEM NO: 80-5-5
DATE: March 26, 1980

ITEM: Research Proposal No. 902-75 entitled "A Study of the Origin and Fate of Air Pollutants in California's Sacramento Valley."

RECOMMENDATION: Adopt Resolution 80-20 approving Research Proposal No. 902-75 for funding in an amount not to exceed $299,945.

SUMMARY: Wind patterns in the Carquinez Straits and the Delta Region suggest that emissions from the Bay Area are transported into the Sacramento Valley. Local emissions are superimposed on the Bay Area emissions as they move downwind into the Sacramento Valley. These emissions contribute to the oxidant levels in the Sacramento Valley and in the western slopes of the Sierra Nevada. As a result, there is concern over the effect of ozone upon agriculture in the Sacramento Valley and upon the forests of the Sierra Nevada. The extent of transport of pollutants into and through the Sacramento Valley is only poorly characterized and is unquantified.

In this study, small amounts of inert chemical tracer gases will be released at selected points in the Bay Area and the Sacramento Valley. Air samples will be collected throughout the downwind receptor areas of the Sacramento Valley and of the western slopes of the Sierra Nevada, and based on the tracer gas concentrations measured in these samples, the pollutant transport routes will be identified and the impact will be quantified.

The results of this project are needed to assist in the development of control strategies that will permit achievement of the ambient air quality standard for ozone in the areas where the sources are located and in the adjacent downwind receptor areas.

State of California
AIR RESOURCES BOARD

Resolution No. 80-21

March 26, 1980

WHEREAS, Health and Safety Code Section 39601 authorizes the Air Resources Board to adopt standards, rules and regulations necessary for the proper execution of the powers and duties granted to and imposed upon the Board by law; and

WHEREAS, Health and Safety Code Section 39801 requires the Board to administer, pursuant to Chapter 5 (commencing with Section 39800), of Part 2, Division 26, of the Health and Safety Code, the Air Pollution Control Subvention Program with such funds as may be appropriated to it for purposes of said Chapter; and

WHEREAS, Health and Safety Code Sections 39800 through 39811 establish the framework and requirements of the Air Pollution Subvention Program; and

WHEREAS, the Board has previously adopted regulations implementing the subvention program in Sections 90100 through 90410 of Title 17, California Administrative Code; and

WHEREAS, it is desirable for the Board to change the subvention program to: (1) recognize the different program needs, problems and resources of the large urban, small urban and rural districts of the state; (2) simplify the administrative procedures; (3) establish regular disbursements of subvention funds; and (4) encourage ARB/APCD staff cooperation in defining district program objectives under the subvention program and formalize annual Board review of such objectives; and

WHEREAS, Section 90115 of the subvention regulations adopted by this resolution requires the Board to categorize each district in accordance with the standards set forth in Section 90100(e); and

WHEREAS, Section 90115(e) of the subvention regulations adopted by the resolution requires the Board to establish Program Objectives for the three categories of districts; and

WHEREAS, the California Environmental Quality Act and ARB regulations require that an activity not be adopted as proposed where significant environmental impacts have been identified and alternative and/or mitigation measures which would substantially reduce these impacts exist; and

WHEREAS, the Board recognizes the possible adverse effects of the passage of Proposition 9 and Federal funding reductions, should either or both occur, on local air pollution control programs; and

WHEREAS, the Board, staff, and local districts have worked cooperatively in the preparation of the subvention regulations, Program Objectives, and assignment of districts to categories, which are the subjects of this resolution; and

WHEREAS, a public hearing has been held in accordance with the provisions of the Administrative Procedure Act (Government Code, Title 2, Division 3, Part 1, Chapter 4.5); and

WHEREAS, the Board finds:

That the amendments to the subvention regulations adopted by this resolution: (1) will recognize the different program needs, problems and resources of the large urban, small urban and rural districts of the state; (2) will simplify administrative procedures; (3) will establish regular disbursements of funds; and (4) will increase ARB/APCD staff cooperation in defining Program Objectives and will formalize annual Board review of such objectives;

That the list of districts by subvention categories attached hereto as Attachment B properly categorizes districts by the standards set forth in Section 90100(e) of the subvention regulations adopted by this resolution;

That adoption of the fiscal year 1980-81 Program Objectives attached hereto as Attachment C is necessary to insure that the Air Pollution Control Districts are actively and effectively engaged in the reduction of air contaminants pursuant to Health and Safety Code Section 39806;

That neither staff nor the public have identified any significant adverse environmental impacts resulting from implementation of this proposal;

NOW, THEREFORE, BE IT RESOLVED, that the Board amends its regulations in Subchapter 3, Chapter 1, Part III, Title 17, California Administrative Code (Sections 90100 through 90410) as set forth in Attachment A hereto; and

BE IT FURTHER RESOLVED, that the Board adopts the categorization of districts pursuant to Section 90115 as set forth in the list of Districts by Subvention Category, Attachment B hereto; and

BE IT FURTHER RESOLVED, that the Board, pursuant to Section 90115 of said regulations, adopts the fiscal year 1980-81 Program Objectives as set forth in Attachment C hereto; and

BE IT FURTHER RESOLVED, that the Board acknowledges the need to reassess the local APCD Program Objectives for fiscal year 1980-81 if Proposition 9 passes and reduces the local district budget support. The Board encourages the local districts to consider additional funding via permit and variance fees; and

BE IT FURTHER RESOLVED, that the Board, directs the Executive Officer to evaluate in cooperation with the District the ability of the Yolo-Solano Air Pollution Control District to carry out the following Program Objective Detailed Elements: A1-A3, and B1-B5 as shown in Attachment C to this resolution.

I certify that the above is a true and correct copy of Resolution 80-21 as passed by the Air Resources Board

Sally Rump

Sally Rump, Board Secretary

Subchapter 3. SUBVENTIONS

Article 1. GENERAL PROVISIONS

90100. Definitions. (a) "Air Basin" means a region within California as defined in Article 1 (commencing with Section 60100), Subchapter 1 of this Chapter.

(b) "Air pollution control program" means the aggregate of all of the activities within a district or in support of a district's effort to control air pollution and to fulfill its obligations under the law.

(c) "Board" means the State Air Resources Board, or any person authorized to act in its behalf.

~~(d) "Conditional approval" means the approval of either an initial or a final subvention application, subject to conditions which the Executive Officer finds to be necessary to ensure the district's compliance with the requirements of an active and effective air pollution control program, as described in Section 90115. The Executive Officer may condition the payment of a portion or all of a district's subvention upon the fulfillment of specific conditions. In no case, however, is the portion of the subvention so conditioned, to exceed the actual cost of fulfilling such conditions. A district's acceptance of a subvention on the basis of a conditional approval shall be deemed to be the district's commitment to abide by such conditions. An application to which the Executive Officer grants conditional approval is a conditionally approved application.~~

(d) ~~(e)~~ "Basinwide air pollution control plan" means the plan prepared and submitted by the control council of each air basin, or, where one district includes an entire air basin, by such district, as approved by the Air Resources Board pursuant to Section 41600, 41500, or 41602 of the Health and Safety Code.

(e) ~~(v)~~ "Category" means a level in which a district will be classified for the purpose of establishing program objectives. Criteria considered in determining the classification of districts will include: population, emissions, violations of ambient air quality standards, size of the district program, and subvention funding levels.

The categories for districts are:

(1) "Large urban district";
(2) "Small urban district";
(3) "Rural district".

(f) "Control Council" means a basinwide air pollution control council established pursuant to Section 40900 of the Health and Safety Code.

~~(g) "Designated representative" means a person appointed by a control council to act on its behalf for the purpose of commenting on individual or supplemental subvention applications.~~

(g) ~~(h)~~ "District" means a county air pollution control district, regional air pollution control district, unified air pollution control district, the Bay Area Air Quality Management District, or the South Coast Air Quality Management District as provided for in Section 40200 and 40410, respectively, of the Health and Safety Code.

(h) ~~(i)~~ "Dollars budgeted" means moneys derived from revenue sources within a district for use in the district's air pollution control program as ~~and either:~~ ~~(1)~~ shown in the district's adopted budget~~,~~ ~~or~~ and subvention application.

~~(2) Itemized in the district's approved or conditionally approved final application and expended in accordance with a cost allocation plan approved by the Executive Officer.~~

(i) ~~(j)~~ "Executive Officer" means the Executive Officer of the Air Resources Board.

~~(k) "Federal funds" means funds, services, or personnel provided by the Federal Government to a district to be used in the operation of the district's air pollution control program.~~

(j) ~~(m)~~ "Fiscal year" means the 12-month period from July 1 of one year through June 30 of the following year.

(k) ~~(n)~~ "Implementation program" means a district's program to implement the basinwide air pollution control plan.

~~(o) "Initial application" means an application received or postmarked before June 1 of the fiscal year preceding the subvention year.~~

~~(p) "Provisional population data" means population data, as of July 1 of the fiscal year preceding the subvention year compiled by the Department of Finance.~~

(l) ~~(q)~~ "Quarter" means any three month period ending March 31, June 30, September 30, or December 31.

(m) ~~(r)~~ "Quorum" means

(1) more than one-half of the total membership; or

(2) one-half of the total membership if all the districts in the basin have agreed by formal resolution to abide by the actions of such a quorum; such resolutions may specify that such actions must be unanimous.

(n) ~~(s)~~ "SB 90 population data" means population data, as of January 1 of the fiscal year preceding the subvention year, compiled by the Department of Finance in compliance with Section 2227 of the Revenue and Taxation Code.

(o) ~~(t)~~ "Subvention" means funds granted to a district by the State, as authorized by Chapter 5, Part 2, Division 26 of the Health and Safety Code, for financial assistance to the district's air pollution control program.

(p) ~~(1)~~ "~~Final~~ Subvention application" means an application received or postmarked between ~~July 15~~ May 1 of the preceeding subvention year and ~~September 15~~ September 30 ~~of the subvention year.~~ A subvention ~~final~~ application shall be based on the district's budget and program as adopted by the district's air pollution control board~~, and the approved initial application, if the initial application has been conditionally approved, the final application should reflect such conditions.~~ The amount of subvention requested in an ~~final~~ application shall be based on "SB90" population data.

(q) ~~(u)~~ "Subvention year" means the fiscal year for which a subvention is to apply.

Note: Authority cited: Health and Safety Code Section 39601. Reference: Health and Safety Code Sections 39800, 39801, 39012, 39053, and 39025.

90110. Types of Subventions. (a) "Coordinated subvention" means a subvention authorized by Section 39802 of the Health and Safety Code; such a subvention may be granted to a district participating in a coordinated basinwide program as described in Section 90120 of these regulations. A coordinated subvention may be granted to a qualifying district on a matching fund basis up to one subvention dollar ($1) for each one dollar ($1) budgeted by the district. The amount of a coordinated subvention shall not be less than eighteen thousand dollars ($18,000) for any district, if the district provides the required matching funds and insofar as adequate funds are available, and shall not exceed the amount authorized by Section 39802 of the Health and Safety Code unless that amount is increased by the Executive Officer in behalf of the Board after receiving written approval of the greater amount from the Director of Finance pursuant to Section 39805 of the Health and Safety Code.

(b) "Individual subvention" means a subvention authorized by Section 39803 of the Health and Safety Code; an individual subvention may be granted to each qualifying district on a matching fund basis of up to two subvention dollars ($2) for each three dollars ($3) budgeted by the district. The amount of an individual subvention shall not be less than

twelve thousand dollars ($12,000) for any district, if that district provides the required matching fund, and shall not exceed the amount authorized by Section 39803 of the Health and Safety Code, unless that amount is increased by the Executive Officer in behalf of the Board after receiving written approval of the greater amount from the Director of Finance pursuant to Section 39805 of the Health and Safety Code.

(c) "Special subvention" means a subvention authorized by Section 39804 of the Health and Safety Code; such a subvention may be granted to a district participating in a coordinated basinwide program as described in Section 90120 of these regulations and lying in an air basin whose population is less than 98,000, if for 1975-76 and subsequent fiscal years, the dollars budgeted by each district in the air basin are equal to or greater than the amount specified in Section 39804 of the Health and Safety Code. If the $45,000 limit specified in Section 39804 of the Health and Safety Code is increased pursuant to Section 39805 of the Health and Safety Code, the local per capita funds budgeted by the district must be increased by the same proportion. The sum of the special subventions to be granted, for said fiscal years, to all of the districts in an air basin will not exceed the difference between the maximum amount authorized by Section 39804 of the Health and Safety Code, unless that amount is increased by the Executive Officer in behalf of the Board after receiving written approval of the greater amount from the Director of Finance pursuant to Section 39805 of the Health and Safety Code, and the rate authorized in Section 39804 of the Health and Safety Code multiplied by the basin population. The sum of the special subventions to be granted to the districts in an air basin shall be prorated according to population among the districts in the air basin.

(d) "Supplemental subvention" means a subvention authorized by Section 39810 of the Health and Safety Code; a district may receive a supplemental subvention on a matching fund basis of up to one subvention dollar ($1) for each one dollar ($1) budgeted by the district. Dollars budgeted by the district which are needed to qualify for a coordinated, individual, or special subvention, may not be used to qualify for a supplemental subvention. A supplemental subvention shall not be approved for any district which has not, for the same fiscal year, been granted a coordinated, individual, or special subvention.

Note: Authority cited: Health and Safety Code Section 39601. Reference: Health and Safety Code Sections 39802-39804 and 39810.

90115. Program Objectives. The Board shall classify districts by category pursuant to Section 90100(e) of this subchapter and shall adopt program objectives appropriate for such categories which shall constitute the definition of active and effective program pursuant to Section 39806 of the Health and Safety Code. Following cooperation between ARB and district staff in proposing recommendations, the Board shall hold a public hearing annually in the first quarter of the calendar year to consider revisions of the district classifications and program objectives.

Active and Effective Program. For the purposes of this subchapter, a district shall be considered to be operating an active and effective program if unless the Executive Officer finds that:

(a) The district fulfills all legal obligations of a district;

(b) The district has submitted an approvable implementation program to the Board. The approval of a coordinated, individual, or special subvention application shall be deemed to fulfill the requirements of Sections 39806 and 41603 of the Health and Safety Code.

(c) The district submits timely amendments to its implementation program as required to reflect changes in the basinwide air pollution control plan. If the district considers portions of the plan not applicable in the district, it must receive approval for such exceptions from the appropriate control council and from the Board before incorporating such exceptions into its program;

(d) The district provides adequate personnel and other resources to carry out its implementation program;

(e) The district fulfills all of the conditions, if any, specified in the approval of its application;

(f) The district makes satisfactory progress in the accomplishment of the program objectives stated in its application;

(g) The district fulfills all of the requirements of this Subchapter;

(h) The district submits all reports required by state or federal law or regulation, or by the Executive Officer.

~~(i) The district's performance regarding the following is satisfactory:~~

~~(1) Permit System;~~
~~(2) Air Monitoring;~~
~~(3) Source Evaluation;~~
~~(4) Source Testing; and~~
~~(5) Enforcement Activities.~~

Note: Authority cited: Health and Safety Code Section 39601. Reference: Health and Safety Code Sections 39801, 39806, and 41603.

90120. Coordinated Basinwide Program. A district satisfying either of the following conditions will be considered to be participating in a coordinated basinwide program, provided that when a district lies in more than one air basin, only the portion(s) of the district which satisfies either of these conditions shall be considered to be participating in such a program.

(a) A district which includes an entire air basin.

(b) Two or more districts which together include an entire air basin, and which meet the following requirements:

(1) The rules and regulations except for administrative procedures are uniform among all districts and are consistent with the approved nonattainment plan for each district's area. For any air basin where the control council has determined that equivalent rules and regulations throughout the entire air basin are not necessary for uniformity, the

control council may divide the air basin into zones within which equivalent rules and regulations will be required. For the purposes of this subsection, equivalent rules and regulations means rules and regulations which effect the same degree of control. In establishing such zones, the control council shall consider topography, meteorology, population distribution, and air quality;

(2) The control council shall meet as often as necessary for the transaction of business, but not less than once per quarter except as provided for below. The control council of any air basin ~~with a population of less than 98,000 shall meet at least once during each half of the subvention year or~~ consisting solely of districts in the rural category may establish an equivalent procedure for basinwide consideration of policy matters and shall meet within 30 days after it has been requested to meet by the Executive Officer or by a member of the council. For the purposes of this Subdivision a quorum must be present in order to constitute a meeting; copies of the minutes of each meeting shall be submitted to the Executive Officer within 30 days after the date of the meeting; and

(3) The districts shall be parties to one joint powers agreement or other enforceable agreement acceptable to the Executive Officer. The agreement shall specifically provide for the following:

(A) The sharing of qualified air pollution personnel and equipment in a manner which results in the effective use of the basinwide resources and ensures that all districts in the air basin will maintain an active and effective program.

(B) Interdistrict coordination of activities including enforcement; air monitoring; engineering; and, if

required by the State Implementation Plan, traffic and land use planning; and

(C) Implementation of the State Air Pollution Emergency Plan, where applicable.

~~(4)--Each-district-shall-have-an-active-and-effective program-as-defined-by-Section-90115.~~

Note: Authority cited: Health and Safety Code Section 39601. Reference: Health and Safety Code Sections 39801, 39802, 39806.

~~90140.--Consideration-of-Federal-Funds.--(a)--An-individual subvention-to-which-a-district-or-portion-of-a-district-would otherwise-be-entitled-shall-be-reduced-by-the-amount-by-which the-district's-federal-funds-exceed-the-dollars-budgeted, subject-to-the-limitations-provided-in-Subdivision-(b)-of-this Section.--A-coordinated,-special,-or-supplemental-subvention shall-not-be-reduced-by-reason-of-a-district-receiving-federal funds.~~

~~(b)--Subvention-reductions-determined-pursuant-to-this Section-shall-not-exceed-one-half-(1/2)-of-the-subvention to-which-a-district-would-otherwise-be-entitled-in-any fiscal-year.~~

~~Note:--Authority-cited:--Health-and-Safety-Code-Section 39601.--Reference:--Health-and-Safety-Code-Sections-39801-and 39807.~~

Article 2. APPLICATION PROCEDURES

~~90200.--Subvention-Application.~~ ~~(a)~~ ~~An initial application for subvention shall be submitted to the Executive Officer by the district's air pollution control board or by its air pollution control officer on forms approved by the Executive Officer.~~

(1) An initial application shall include a description of the district's proposed budget, program, and objectives for the subvention year, and shall demonstrate that the district will conduct an active and effective program as described in Section 90115. Estimates of the subvention to which the district is entitled may be based on provisional population data.

(2) An initial application received or postmarked by March 31 preceding the subvention year shall be approved, conditionally approved, or disapproved, by the following June 1. Approval or conditional appproval shall only be granted insofar as the Executive Officer expects funds to be available.

(3) An initial application received or postmarked on or after April 1 but by May 30 of the fiscal year preceding the subvention year shall be approved, conditionally approved, or disapproved by the following August 1. Approval or conditional approval shall only be granted insofar as the Executive Officer expects funds to be available.

(4) Except as provided for in Subsection 90360(a), funds will not be disbursed on the approval or conditional approval of an initial application.

(5) A district submitting an initial application for an individual or supplemental subvention shall concurrently submit a copy of such application to the control council(s) or its designated representative for comment. Such comments, if any, shall be submitted to the Executive Officer within thirty (30) days after the date the application was submitted to the Executive Officer.

~~(b)~~ 90200. (a) Subvention Application. An ~~final~~ application for subvention shall be submitted to the Executive Officer on forms approved by the Executive Officer, with a resolution or minute order from the district's air pollution control board authorizing such application.

(1) A subvention ~~final~~ application shall include a description of the district's adopted budget, program, and the program objectives adopted pursuant to Section 90115 for the subvention year. ~~and as delineated in Section 90115 shall provide for an active and effective program. If any of the information shown on the approved initial application is unchanged, it may be included on the final application by reference. Estimates of resources and personnel needs for the two fiscal years subsequent to the subvention year shall be included in the final application. Such estimates shall reflect any increases necessary to carry out parts of the basinwide air pollution control plan(s) not already being implemented. Estimated resource and personnel needs shall not be construed to be a final commitment on the part of the district to provide such resources and personnel.~~

(2) Estimates of the subvention to which the district is entitled shall be based on "SB90" population data.

(3) The Executive Officer shall approve, ~~conditionally approve,~~ or disapprove all applications by November 15. Approval ~~or conditional approval~~ shall only be granted insofar as funds are available.

(4) In the event that more the total subventions funds are requested than are requested exceed the total allocation that is available, highest priority for funds will be given to those districts whose initial applications were received or postmarked by March 31. In the event that more subvention funds are requested by March 31 than are available, the funds for districts which submitted initial applications by March 31 shall be prorated among these districts. the Executive Officer shall prorate the funds available among all the districts.

(5) A district submitting a subvention final application for a coordinated or a special subvention shall, when such a district is in an air basin comprising two or more districts, submit a copy of its application to the control council for approval.

The Executive Officer shall not approve or conditionally approve a subvention final application for a coordinated or special subvention unless the following have been received by September 30 of the subvention year:

(A) By July 15 of the subvention year, An executed, acceptable joint powers agreement or other enforceable agreement required by Section 90120(b) which is effective for the subvention year, and

(B) By October 15 of the subvention year, A resolution or minute order from the control council expressing its concurrence with the applications from all of the districts in the air basin.

~~(6) If an acceptable joint powers agreement or other enforceable agreement required by Subsection 90200(b)(5)(A) is received after July 15 of the subvention year, the Executive Officer may approve or conditionally approve final application for a coordinated or special subvention by granting an individual subvention for the fraction of the subvention year before receipt of the agreement and a coordinated or special subvention for the remaining fraction of the subvention year.~~

(b) ~~(c)~~ An application for a supplemental subvention shall contain the following information:

(1) The proposed expenditures related to the supplemental subvention, which shall be shown on the district's proposed budget for the subvention year;

(2) A detailed explanation of the purpose of the requested supplemental subvention, and the benefits which are expected to result; and

(3) The length of time required to complete the work proposed, and the total cost of the project.

Note: Authority cited: Health and Safety Code Section 39601. Reference: Health and Safety Code Sections 39801, 39806, and 39810.

90208. Accomplishing Objectives. If a district receiving a subvention determines that it will be unable to accomplish the applicable objectives adopted pursuant to ~~maintain an active and effective program as delineated in~~ Section 90115 the district shall so notify the Executive Officer in writing within 30 days after it makes such determination.

Note: Authority cited: Health and Safety Code Section 39601. Reference: Health and Safety Code Section 39801 and 39806.

90210. Application Revision. A district may revise or amend its application at any time prior to ~~May 1~~ June 30 of the subvention year.

Note: Authority cited: Health and Safety Code Section 39601. Reference: Health and Safety Code Section 39801.

Article 3. APPLICATION PROCESSING

90300. Notification of Receipt of Application. ~~(a)~~ ~~Except as provided for in Subdivision (b)~~ The Executive Officer shall acknowledge receipt of all subvention applications, including revisions, ~~within ten (10) days.~~ within 30 days. ~~Acknowledgement of receipt of initial applications shall be made to the district's air pollution control officer. acknowledgement of receipt of final applications shall be made to the chairperson of the district's air pollution control board and to the chairperson of the control council, if any, of the air basin to which the application applies.~~

~~(b) The receipt of an application for a coordinated or special subvention will not be acknowledged until applications have been received from all the districts in the air basin.~~

Note: Authority cited: Health and Safety Code Section 39601. Reference: Health and Safety Code Section 39801.

90310. Factors to be Considered in the Review of Applications for Coordinated, Individual, and Special Subventions. ~~(a)~~ The primary factor to be considered in the review of an application for a coordinated, individual, or special subvention is the district's ~~operation~~ attainment of ~~an~~ the applicable objectives adopted pursuant to ~~active and effective air pollution control program as described in Section 90115. The Executive Officer may consider the district's past performance, as well as the program proposed in the application, to evaluate the district's ability to operate an active and effective program.~~

~~(b) If an application for a coordinated, individual, or special subvention does not propose an active and effective program, or if the district is not operating such a program, the Executive Officer may grant conditional approval of the application.~~

Note: Authority cited: Health and Safety Code Section 39601. Reference: Health and Safety Code Sections 39801 and 39806.

90320. Factors to be Considered in the Review of Applications for Supplemental Subventions. ~~(a)~~ An application for a supplemental subvention will be evaluated and ranked according to priority by the Executive Officer. Supplemental subventions will be awarded, insofar as funds are available, for those proposals having the highest priorities.

~~(b) The criteria to be considered in establishing the priority of an application for supplemental subvention will include, but need not be limited to:~~

~~(1) The proposal's expected benefits in terms of reductions in emissions of air contaminants, and in terms of improved air quality;~~

~~(2) The proposal's expected benefits to the district's air pollution control program;~~

~~(3) The severity of the air pollution problem in the air basin and in the district;~~

~~(4) The district's ability to carry out the proposal; and~~

~~(5) The funds allocated by the district to carry out the proposal.~~

Note: Authority cited: Health and Safety Code Section 39601. Reference: Health and Safety Code Sections 39801 and 39810.

90330. Application Disapproval. (a) A district's application for a coordinated, individual, or special subvention may be disapproved by the Executive Officer if after consulting with the district it is found that:

(1) The district does not propose ~~an active and effective~~ a program to meet the applicable objectives adopted pursuant to Section 90115; or ~~in its application; or~~

(2) The district is not operating ~~or has not operated an active and effective~~ a program ~~under the prior year's subvention,~~ to attain the applicable objectives adopted pursuant to Section 90115.

(b) If an application is disapproved, the Executive Officer shall state the reason(s) in writing to the district within 15 days of the disapproval.

(c) Districts may appeal Executive Officer action taken pursuant to this section in accordance with Section 90500.

(d) The Executive Officer shall not approve an application for a special subvention unless the joint powers agreement or other enforceable agreement required pursuant to Section 90120(b)(3) has been received.

Note: Authority cited: Health and Safety Code Section 39601. Reference: Health and Safety Code Sections 39801 and 39806.

90360. Disbursement of Funds. Each subvention is to be disbursed in accordance with the following:

(a) Upon annual appropriation by the Legislature ~~Upon approval or conditional approval of a district's final application~~ the Executive Officer ~~may~~ shall request the State Controller to disburse one half (1/2) of the appropriate ~~approved~~ subvention as estimated by the Executive Officer. ~~If the district's air pollution control board has executed an acceptable agreement to implement the program proposed in its initial application as amended by any conditions placed on the approval of the initial application, the Executive Officer may request that the State Controller disburse up to one half (1/2) of the requested subvention before approval of the final application. In such a case the Executive Officer may request that the State Controller disburse the difference, if any, between the initial disbursement and one-half (1/2) of the approved subvention upon approval of the final application~~

(b) ~~The~~ Districts classified as either category 1 or category 2 districts under Section 90100(v) shall, by ~~February~~ January 15 of the subvention year, submit an ~~claim~~ interim report covering the ~~reporting~~ period from July 1 through ~~December 31~~ November 30 of the subvention year~~.~~ and by August 15 following the subvention year, shall submit a final report for the remainder of the year.

~~(c) Except as provided for in Subdivision (f) of this Section, the district shall submit by May 15 of the subvention year, a claim covering the reporting period from January 1 through March 31 of the subvention year.~~

(c) ~~(d)~~ ~~The~~ Districts classified as category 3 districts shall submit by August 15 following the subvention year a final report covering the ~~reporting~~ period ~~from April 1 through June 30 of the~~ subvention year.

~~(d) (e) The claims and the final report shall be on forms approved by the Executive Officer and shall include, but need not be limited:~~

~~(1) A statement of the district's expenditures as of the end of the reporting period, expressed as a percentage of the district's total budget (including local, state, federal, and other funds) for the subvention year. If this percentage is significantly less than the percentage of the subvention year which has elapsed as of the end of the reporting period, the district shall include an explanation of this difference;~~

~~(2) A report of the district's progress during the reporting period in fulfilling the requirements of Section 90115. If any of the required information has been submitted on a prior claim or report, such information may be included by reference; and~~

~~(3) Copies of any amendments to the district's rules and regulations which were adopted during the reporting period.~~

(d) ~~(f)~~ ~~If,~~ in the review of Six months after Legislative appropriation the claims due by February ~~15~~ and May ~~15,~~ ~~the Executive Officer finds that the district is engaged in the operation of an active and effective program as described in Section 90115,~~ the Executive Officer may shall ~~(1)~~ request the State Controller to disburse the remainder of the approved subvention, and unless, after review of the district's program, the Executive Officer finds that the district is not engaged in a program to meet the applicable objectives adopted pursuant to Section 90115, for reasons that are not expected to be easily resolved, and invokes the provisions of Article 4 of this Subchapter.

~~(2) For the February 15 claim, waive the requirement for the May 15 claim, and require that the final report will cover the reporting period from January 1 through June 30 of the subvention year.~~

~~(g) If, in the review of the claims due February 15 and May 15, the Executive Officer finds that the district is not engaged in the operation of an active and effective program for reasons that are expected to be easily resolved, the Executive Officer may disburse an additional one-quarter (1/4) of the approved subvention.~~

~~(h) If, in the review of the districts program of the claims due February 15 or May 15, or the final reports, the Executive Officer finds that the district is not engaged in the operation of an active and effective a program to meet the objectives adopted pursuant to Section 90115(a), for reasons that are not expected to~~

~~be easily resolved, the Executive Officer may invoke the provisions of Article 4 of this Subchapter.~~

(e) ~~(i)~~ All subvention funds not expended or encumbered by the district during the subvention year shall be returned to the Air Resources Board and such funds shall revert to the State General Fund.

(f) ~~(j)~~ A county district shall maintain a separate account for receipts, expenditures, and funding of the district in accordance with ~~(k) All districts may be required to use~~ accounting procedures acceptable to the ~~Executive Officer, provided that such accounting procedures are not in conflict with the recommendations of the~~ State Controller's Office.

Note: Authority cited: Health and Safety Code Section 39601. Reference: Health and Safety Code Sections 39801, 39806, and 39811.

Article 4. WITHHOLDING AND RECOVERY OF SUBVENTIONS AND BOARD OPERATION OF DISTRICT PROGRAMS

90400. Withholding and Recovery of Funds. (a) The Executive Officer may review the programs and expenditures of each district receiving a subvention under the provisions of this Subchapter. If such a review discloses that the dollars budgeted or the subvention moneys granted are not being expended substantially in accordance with the application on which the subvention was based, or that the district is not engaged in ~~an active and effective~~ a program to attain the applicable objectives adopted ~~as described~~

~~in~~ pursuant to Section 90115, the Executive Officer may after hearing take any or all of the following actions:

(1) Cease all or part of any further payments of the current fiscal year's subvention;

(2) Withhold all or part of any future subventions; and

(3) Bring a legal action against the district to recover moneys disbursed for that fiscal year.

(b) The Executive Officer may reduce a coordinated subvention or a special subvention to an individual subvention if it is found that the provisions of Section 90120 for a coordinated basinwide program are no longer being carried out.

(c) Action by the Executive Officer to withhold, recover, or reduce funds pursuant to this section are subject to the provisions of Article 5 of this subchapter.

Note: Authority cited: Health and Safety Code Section 39601. Reference: Health and Safety Code Sections 39801, 39806, and 39808.

90410. Board Operation of District Air Pollution Control Programs. (a) The Executive Officer may utilize moneys which have been subvened or would otherwise be subvened to a district, and such other moneys as may be available, to carry out a district's air pollution control program or any segment of such a program. Such action may be initiated:

(1) At the request of the district; or

(2) When the Board has determined, pursuant to Sections 39806, 41500 or 41502 of the Health and Safety Code that ~~a portion or all of the district's air pollution control program~~ is not engaged in a program to meet the applicable objective adopted pursuant to Section 90115. ~~actively and effectively being carried out pursuant to the coordinated basinwide air pollution control plan and the related implementation program.~~

(b) If the Board has performed services for a district, funds to defray the cost of such services may be deducted from subsequent disbursement of the district's subvention.

(c) If sufficient subvention funds are not available to cover the cost of such services, the district may be billed for such services. In no event shall the charge for such services exceed the district's approved subvention.

Note: Authority cited: Health and Safety Code Section 39601. Reference: Health and Safety Code Sections 39801, 39806, 41500 and 41502-41505.

Article 5. APPEALS

90500. Appeal Procedures. (a) Review of any decision of the Executive Officer made pursuant to the provisions of this Subchapter may be requested by filing a petition with the Board within thirty (30) days of the date upon which the district was notified of such decision.

~~(b) Within forty-five (45) days after receiving a petition as provided for by Subdivision (a) of this Section, the Board shall hold a public hearing to review the district's appeal.~~

(b) The Board shall hold a public hearing at its first regularly scheduled Board meeting at least 60 days after receiving a petition as provided for by Subdivision (a) of this section.

(c) Notification of the public hearing shall be given to the district and to the appropriate control council at least ~~twenty (20)~~ forty-five (45) days before such a public hearing.

(d) The Executive Officer, district representatives, and any interested persons may comment on the district's appeal at such a public hearing.

Note: Authority cited: Health and Safety Code Section 39601. Reference: Health and Safety Code Sections 39801 and 39808.

ATTACHMENT B

DISTRICTS BY SUBVENTION CATEGORY

CATEGORY I	*Grant Amount	% of State Total	# of Grants
Large Urban	$ 5,000,000	76%	3

SCAQMD
BAAQMD
San Diego

CATEGORY II	*Grant Amount	% of State Total	# of Grants
Small Urban	$ 970,000	14%	8

Ventura
Fresno
Monterey
Kern
San Joaquin
Santa Barbara
Stanislaus
Sacramento

CATEGORY III	*Grant Amount	% of State Total	# of Grants
Rural	$ 690,000	10%	35

Great Basin
Lake
Amador
Calaveras
El Dorado
Mariposa
Nevada
Placer
Plumas
Sierra
Tuolumne
Del Norte
Humboldt
Mendocino
Northern Sonoma
Trinity
Lassen
Modoc
Shasta
Siskiyou
San Luis Obispo
Imperial
Butte
Colusa
Glenn
Sutter
Tehama
Yolo-Solano
Yuba
San Bernardino (SEDAB portion only)
Los Angeles (SEDAB portion only)
Kings
Madera
Merced
Tulare

TOTAL GRANTS - 46

TOTAL AMOUNT - $6,700,000

*Figures rounded and based on FY 79-80 funding levels.

ATTACHMENT C

APCD PROGRAM OBJECTIVES

FOR F.Y. 1980-81

This package contains the ARB staff proposal of APCD Program Objectives for the FY 80-81 Subventions Program. It is part of the proposed changes to the ARB subvention program which are scheduled for Board Hearing on March 26, 1980 in Los Angeles.

This package consists of Program Objectives made up of Basic Elements and Detailed Elements which staff considers minimum essentials for the operation of effective local air pollution control programs in California.

The Elements are organized to apply to three categories of districts: large urban, small urban, and rural (see Figure I for a listing of districts by these categories).

Basic Elements apply to all three categories of Districts. Detailed Elements (unless otherwise noted) apply to Large Urban and Small Urban districts only. Figure II summarizes the application of these elements to the three categories of districts. The description of the Basic and Detailed Elements begins on page 4 of this appendix.

FIGURE I

PROPOSED SUBVENTION CATEGORIES
WITH 1979-80 FUNDING LEVELS

CATEGORY I	*Grant Amount	% of State Total	# of Grants
Large Urban	$ 5,000,000	76%	3

SCAQMD
BAAQMD
San Diego

CATEGORY II	*Grant Amount	% of State Total	# of Grants
Small Urban	$ 970,000	14%	8

Ventura
Fresno
Monterey
Kern
San Joaquin
Santa Barbara
Stanislaus
Sacramento

CATEGORY III	*Grant Amount	% of State Total	# of Grants
Rural	$ 690,000	10%	35

Great Basin
Lake
Amador
Calaveras
El Dorado
Mariposa
Nevada
Placer
Plumas
Sierra
Tuolumne
Del Norte
Humboldt
Mendocino
Northern Sonoma
Trinity
Lassen
Modoc
Shasta
Siskiyou
San Luis Obispo
Imperial
Butte
Colusa
Glenn
Sutter
Tehama
Yolo-Solano
Yuba
San Bernardino (SEDAB portion only)
Los Angeles (SEDAB portion only)
Kings
Madera
Merced
Tulare

TOTAL GRANTS - 46

TOTAL AMOUNT - $6,700,000

*Figures rounded and based on FY 79-80 funding levels.

Figure II

SUMMARY OF PROGRAM OBJECTIVES FOR FY 1980-81
(BY CATEGORIES OF DISTRICTS)

PROPOSED PROGRAM OBJECTIVES WITH BASIC AND DETAILED ELEMENTS	CATEGORIES OF DISTRICTS IN WHICH BASIC AND DETAILED ELEMENTS ARE REQUIRED		
	CATEGORY 1 LARGE URBAN	CATEGORY 2 SMALL URBAN	CATEGORY 3 RURAL
A. Emissions Inventory	Basic Element	Basic Element	Basic Element
1. Gridded Inventory Data	Detailed*	Detailed	Detailed**
2. Assist in NAP inventories	d	d	d**
3. Area Source Data	d	d	d**
B. Stationary Source Controls	Basic	Basic	Basic
1. 1979 NAP rules	d	d	d**
2. 1982 NAP rules	d	d	d**
3. BCC review		d	d**
4.& 5. Vapor Recovery	d	d	d
C. Air Quality Monitoring	Basic	Basic	Basic
1. NAMS/SLAMS	d		
2. ARB performance audit	d		
3. Annual review of SLAMS/NAMS	d		
4. Report on data precision of SLAMS/NAMS		d	d
5. ARB performance audit		d	d
D. Attainment Planning	Basic	Basic	Basic
1. 1982 NAP Technical Products	d	d	
2. 1982 NAP coordination	d	d	
3. 1982 NAP emission allocations	d	d	
4. 4/1/81 RFP/Annual Report	d	d	
E. Prevention of Significant Deterioration	Basic	Basic	Basic
F. CEQA Review	Basic	Basic	Basic
1. Established EIR requirements	d	d	
2. Review for consistency with NAP	d	d	
3. Recommend mitigation	d	d	
G. Public Involvement/Participation	Basic	Basic	Basic
1. Solicit public involvement	d	d	
2. Inform citizens	d	d	

*Basic later labeled "B", detailed labeled "d".
**Applies to a limited number or rural areas--consult appropriate narrative in this report for specific application.

DESCRIPTION OF PROPOSED
BASIC AND DETAILED ELEMENTS
F.Y. 80-81 SUBVENTIONS

A. PROGRAM OBJECTIVE - EMISSION INVENTORY

BASIC ELEMENTS:

1. Assist the state in fulfilling federal requirements for emission data and in maintaining a current, accurate, comprehensive inventory of all pollutants subject to state or federal regulation.

2. Annually review and update inventory data for all facilities within the district's jurisdiction that emit more than 25 tons per year of TSP, TOG, SOx, or NOx; 250 tons per year of CO; or 5 tons per year of lead. Individual emission sources within the facility shall be separately identified if they emit more than 25 tons per year of TSP, TOG, SOx, or NOx; 250 tons per year of CO; or 5 tons per year of lead. Smaller sources at the facility may be aggregated within a source category (e.g., same Source Classification Code). Update information to represent calendar year 1980 shall be provided to the ARB by May 1, 1981.[1] Update information shall be provided if:

   a) emissions from sources at the facility change from the most recently submitted data by more than 5% and by more than 5 tons per year; or

[1] The Emission Inventory Technical Advisory Committee, including representatives of local districts, is expected to look at emission inventory preparation schedules relative to federal reporting requirements for the National Emission Data System and the assessment of Reasonable Further Progress. This may result in changes in the data submittal schedule.

b) separately identified sources have a change in status (e.g., change in compliance; begin or cease operation).

3. Review ARB and district area source emission estimates for calendar year 1979 and identify categories where emissions are inconsistent with local information. Work with the ARB to resolve discrepancies. Provide the ARB with data and documentation for any district emission updates for 1980 by June 1, 1981.[1]

DETAILED ELEMENTS:

1. By September 30, 1980, complete the submittal to the ARB of data on the spatial and temporal characteristics of the emission data base to be used to develop the 1982 nonattainment plans. This objective corresponds to a federal grant objective for F.Y. 1980-81. It is only applicable in areas where the nonattainment plan is to be based on more detailed spatial and temporal data than are routinely submitted to the ARB.

SPECIAL APPLICATION:

This detailed element also applies to the Sacramento Metropolitan Nonattainment Area portion of the Placer and Yolo-Solano districts.

2. Assist the ARB in developing inventories for the 1982 nonattainment area plans:

---

[1]The Emission Inventory Technical Advisory Committee, including representatives of local districts, is expected to look at emission inventory preparation schedules relative to federal reporting requirements for the National Emission Data System and the assessment of Reasonable Further Progress. This may result in changes in the data submittal schedule.

a) Review area source emission estimates developed by the ARB.

b) Provide documentation for district developed estimates.

c) Work to reconcile significantly different emission estimates.

d) Provide data and documentation for locally developed emission projections.

3. Assist the state in the update of 1979 calendar year area source emissions estimates to reflect emissions in 1980 by providing update for categories where:

a) emissions have changed significantly as a result of local controls implemented in 1980;

b) district information indicates 1980 emissions have changed significantly from the 1979 estimates.

Update data and documentation for district estimates[1] should be provided to the ARB by June 1, 1981.

SPECIAL APPLICATION:

Detailed elements 2 and 3 also apply to the following rural districts: El Dorado, Placer, Yolo-Solano, Kings, Madera, Merced, Tulare, Los Angeles, and San Bernardino.

---

[1] The Emission Inventory Technical Advisory Committee, including representatives of local districts, is expected to look at emission inventory preparation schedules relative to federal reporting requirements for the National Emission Data System and the assessment of Reasonable Further Progress. This may result in changes in the data submittal schedule.

All data shall be provided in a format acceptable to the ARB after consultation with the district. Turn-around documents for updating point source data, similar to those developed for the 1979 inventory, will be available for district use.

ARB Guidelines on the 1980 inventory update are expected to be distributed in November 1980.

B. PROGRAM ELEMENT - STATIONARY SOURCE CONTROLS

DETAILED ELEMENTS:

1. For rules required by the 1979 NAP, track the development of suggested control measures so that public hearings can be scheduled for the District to consider adoption of rules to implement such measures without duplicating the work done to develop the measures.

2. Within 90 days after a suggested control measure has been transmitted by the Air Resources Board to the District, hold a public hearing to consider adoption of rules to implement such a measure.

SPECIAL APPLICATION:

Detailed Element 1 also applies to the following rural districts: El Dorado, Imperial, Kings, Los Angeles, Madera, Merced, Placer, San Bernardino, San Luis Obispo, Tulare, and Yolo-Solano.

Detailed Element 2 also applies to the following rural districts: El Dorado, Kings, Los Angeles, Madera, Merced, Placer, Riverside, San Bernardino, Tulare, and Yolo-Solano.

3. (For districts in air basins having control councils and covered by 1 and/or 2), the District will take action as may be necessary to ensure that the Control Council has had an opportunity to consider rules covered by objectives 1 and 2 so that the Council's position can be considered at the District's public hearings.

4. During the 1980-81 fiscal year, inspect bulk plants and terminals located in the District at least twice, and during the 1980-81 fiscal year the District will inspect one third of Stage I installations on underground storage tanks at least once on a random selection basis.

5. During the 1980-81 fiscal year, the District will inspect at least twice, one third of Stage II installations which have exhibited patterns of poor maintenance.

SPECIAL APPLICATION:

Detailed Element 4 applies to the following rural districts: Kings, Madera, Merced, Placer, San Luis Obispo, Tulare, and Yolo-Solano.

Detailed Element 5 applies to the following rural districts: Kings, Madera, Merced, Tulare, and Yolo-Solano. It does <u>not</u> apply to the Small Urban Monterey Bay Unified APCD.

C. PROGRAM ELEMENT - AIR QUALITY MONITORING

BASIC ELEMENTS:

1. Districts that operate any station designated by the ARB as a proposed State and Local Air Monitoring Station (SLAMS) shall have an air monitoring program plan which includes procedures and timetables for implementing federal monitoring, quality assurance, and data reporting regulations (40 CFR Part 58, May 10, 1979).

2. Submit to the ARB monthly for all air monitoring sites at which air monitoring has been conducted for a consecutive period of three months or longer, all gaseous, tape sampled particulate (AISI), and high volume sampled total suspended particulate matter air monitoring data either: (1) on forms prescribed by the ARB within 21 days after the end of the month in which the data were collected, or (2) on computer magnetic tape or key punch cards with computer printout sheets within 45 days after the end of the month in a format approved by the ARB. "Variable" and "Method" codes, and site identification codes shall conform to the ARB's latest codes. Notwithstanding the foregoing, submit to the ARB data for lead, sulfate, and nitrate, and for organic analyses of high volume filters within 45 days after the end of each month in which the data were collected, in the format and using the codes specified above.

3. Documentation of Nondistrict Monitoring

Advise the ARB in writing on a quarterly basis of known air quality surveillance operations conducted within the district's

jurisdiction by parties other than the district or the ARB. This information should include the name and address of the party or parties conducting such monitoring and the nature of the monitoring project.

DETAILED ELEMENTS:

SPECIAL APPLICATION: Detailed elements 1, 2, and 3 apply to the large urban districts only.

1. In accordance with the timetable established in the district's monitoring plan, meet all federal requirements for a "reporting organization" as defined in 40 CFR Part 58, and submit to the ARB and the EPA quarterly and annual reports for precision and accuracy estimates for all ambient air quality data.

2. Participate in the ARB's performance audit program for selected pollutants at selected sites. Such audits shall be scheduled with district concurrence to assure minimal disruption of the district's ongoing monitoring activities.

3. Conduct an annual review of SLAMS, NAMS, and SPM monitoring programs and, with ARB concurrence, make the necessary changes to the SLAMS monitoring program (including site upgrade or relocation) to meet the ongoing monitoring requirements of the SIP.

SPECIAL APPLICATION:

Detailed elements 4 and 5 apply only to those small urban and rural districts that operate air monitoring analyzers and samplers.

4. Conduct all activities, including collocated high-volume sampling, bi-weekly precision tests, as are necessary and required to determine and report individual analyzer and sampler precision estimates, and agency precision estimates for each criteria pollutant measured under the SLAMS/NAMS network. Prepare and submit to the ARB quarterly and annual reports for data precision.

5. Participate in the ARB's performance audit program at all district-operated SLAMS and NAMS.

D. PROGRAM ELEMENT - ATTAINMENT PLANNING

BASIC ELEMENTS:

1. Participate actively in the development, adoption, and implementation of air quality plans required to achieve and maintain state and federal ambient air quality standards.

2. Work with ARB and other APCDs in the air basin to incorporate the approved NAPs into the Basin Implementation Plans.

DETAILED ELEMENTS:

1. Complete those technical work products necessary for an approvable 1982 NAP (i.e., emission inventory and projections, air quality analyses, air quality monitoring, stationary and area source control measures).

2. Work with the appropriate local and state agencies to develop those coordinative mechanisms (e.g., MOUs, resolutions) necessary to insure the development adoption, and implementation of an approvable 1982 NAP.

3. Work with other appropriate jurisdictions to establish a mechanism to: allocate NAP-required emission reductions (by jurisdiction and emissions category); track growth in emissions and other growth; and insure that the emissions associated with growth and proposed projects are consistent with adopted NAPs.

4. Submit (or work with the NAP lead agency to submit) to ARB by April 1, 1981 the second annual report on NAP implementation of maintenance of Reasonable Further Progress.

E. PROGRAM ELEMENT - PREVENTION OF SIGNIFICANT DETERIORATION

BASIC ELEMENT:

. Participate in the development and implementation of an Air Conservation/Prevention of Significant Deterioration (ACP/PSD) program.

F. PROGRAM ELEMENT - CEQA REVIEWS

BASIC ELEMENT:

. Review and comment upon the air quality impacts of proposed major private and public projects in accordance with the California Environmental Quality Act (CEQA) to the extent resources are available to the District.

DETAILED ELEMENTS:

In cooperation with ARB staff:

1. Establish minimum requirements for air quality and emissions data, analysis, and mitigation measures in CEQA statements;

2. Review for and urge consistency between proposed project and adopted NAP; and

3. Recommend and urge emissions and air quality mitigation when needed.

G. PROGRAM ELEMENT - PUBLIC INVOLVEMENT/PARTICIPATION

BASIC ELEMENT:

. Encourage and provide for public involvement/participation in developing and implementing District policies and programs.

DETAILED ELEMENTS:

1. Solicit active public involvement in the development of rules and regulations and in the development, adoption, and implementation of the NAP.

2. Establish and/or maintain a program to inform citizens of the extent and nature of the air pollution problem in the District.

State of California
AIR RESOURCES BOARD

Response to Significant Environmental Issues

ITEMS:	Public Hearing to Consider Amendments to Title 17, California Administrative Code, Regarding the Air Resources Board Subvention Program, Adoption of a General Subvention Policy, and Adoption of Subvention Categories and Program Objectives Pursuant to Such Amendments
PUBLIC HEARING DATE:	March 26, 1980
RESPONSE DATE:	March 26, 1980
ISSUING AUTHORITY:	Air Resources Board
COMMENT:	ARB has not received any comments relevant to any significant environmental issues. The changes to the subvention regulations are of an administrative nature and given the lack of comments the ARB feels there are no significant environmental issues.
RESPONSE:	N/A

CERTIFIED: Sally Rump

DATE: 3/31/80

State of California

Memorandum

To : Huey D. Johnson
Secretary
RESOURCES AGENCY

Date : April 3, 1980

Subject : Filing of Notice of Decision of the Air Resources Board

From : Air Resources Board

Pursuant to Title 17, Section 60007(b), and in compliance with Air Resources Board certification under section 21080.5 of the Public Resources Code, the Air Resources Board hereby forwards for posting the attached notice of decision and response to environmental comments raised during the comment period.

Sally Rump
BOARD SECRETARY

attachments
Resolution 80-21

State of California
AIR RESOURCES BOARD

Resolution 80-22

March 27, 1980

WHEREAS, the Air Resources Board (the "Board") on August 7, 1978, in Resolution 78-48 adopted Rule 475.1 for the South Coast Air Quality Management District (the "District"); and

WHEREAS, the Board, in Resolution 79-2, adopted January 23, 1979, in response to a Petition for Reconsideration filed by the District, affirmed its adoption of Rule 475.1 and also remanded the Rule to the District for limited revisions; and

WHEREAS, the District has not acted to revise the Rule but has recommended that the Board itself consider revisions to the Rule; and

WHEREAS, Health and Safety Code Section 39605 authorizes the Board to provide any assistance to any district; and

WHEREAS, the Board is authorized pursuant to Health and Safety Code Section 40451, after holding a public hearing, to revise the rules and regulations of the District to implement and effectuate the purposes of Division 26 of the Health and Safety Code; and

WHEREAS, Sections 110(a)(2) and 172(a)(1) of the Clean Air Act require that a state implementation plan provide for the attainment of national ambient air quality standards in any nonattainment area as expeditiously as practicable; and

WHEREAS, a commitment was made in the South Coast Air Quality Management District's nonattainment plan to reduce emissions of oxides of nitrogen by means of the measures contained in the Rule adopted by this Resolution; and

WHEREAS, the staffs of the District and the Board have worked together to develop amendments that are satisfactory to the staff of the District; and

WHEREAS, the California Environmental Quality Act and ARB regulations require that an activity not be adopted as proposed if significant environmental impacts have been identified and where feasible alternatives and/or mitigation measures exist which would substantially reduce such impacts; and

WHEREAS, the Board has held a public hearing to consider amendments to Rule 475.1 of the South Coast Air Quality Management District; and

WHEREAS, the Board finds that:

1. It is technologically and economically feasible for the utilities subject to the provisions of Rule 475.1 to reduce emissions of oxides of nitrogen to the levels required in the amended and recodified version of the Rule adopted by this Resolution; and

2. The specified emissions reductions can be achieved by the dates specified in the amended Rule; and

3. The amended Rule provides flexibility to the utilities in complying with the Rule and meets the concerns raised by the utilities in a reasonable way; and

4. The provisions of the amended Rule are necessary to meet the requirements of the Clean Air Act and to achieve and maintain state ambient air quality standards; and

5. There have been no significant environmental impacts identified which would result from adoption of the proposed action.

NOW, THEREFORE, BE IT RESOLVED, that the Board rescinds Rule 475.1 of the South Coast Air Quality Management District controlling emissions of oxides of nitrogen from power plants and adopts for the District Rule 1135.1, as set forth in Attachment A hereto.

BE IT FURTHER RESOLVED, that the Executive Officer is directed to transmit Rule 1135.1 adopted by this Resolution to the Environmental Protection Agency for inclusion in the California State Implementation Plan.

I certify that the above is a true and correct copy of Resolution 80-22 as adopted by the Air Resources Board.

Sally Rump
Board Secretary

Rule 1135.1 of the South Coast Air Quality Management District
Adopted March 27, 1980

and

Rule 59.1 of the Ventura County Air Pollution Control District
Adopted March 27, 1980

for

Controlling Emissions of Oxides of Nitrogen
from Electric Power Generating Equipment

in the

South Coast Air Basin

and the

Ventura County Air Pollution Control District

Note: The differences between Rule 1135.1 and Rule 59.1 are:

1. The term Executive Officer/Air Pollution Control Officer refers to the Executive Officer of the South Coast Air Quality Management District or the Air Pollution Control Officer of the Ventura County Air Pollution Control District, whichever applies.
2. In Part V, "Maximum Allowable Emissions Rate Tables," only the first table for systems of over 5,000 megawatts generating capacity applies in Ventura County Air Pollution Control District.
3. Part VII, "Demonstration Unit," does not apply in the Ventura County Air Pollution Control District.
4. Occasional additional differences are noted in the Rule.
5. Where the term South Coast Air Basin/Ventura County appears, the words, "South Coast Air Basin" apply to Rule 1135.1 and the words Ventura County apply to Rule 59.1.

CONTENTS

Note: This table of contents is solely for the convenience of the reader and is not part of the Rule.

Part		Page
I.	Applicability and Severability	1
	(a) Geographical Limitations	1
	(b) Restricted References	1
	(c) Severability	1
	(d) Compliance With Other Rules and Regulations Not Excluded	1
II.	Definitions	2
III.	Options for Compliance	4
IV.	Control of Individual Units: Unit Tables and Emissions Dispatch	6
	(a) Unit Control: Emissions Allowed by Unit Table	6
	(b) System-Wide Control: Emissions Dispatch Plan	8
V.	Requirements and Compliance Schedules	12
	(a) Stage I Requirements and Compliance Schedule	12
	(b) Stage II Requirements and Compliance Schedule	30
VI.	Maximum Allowable Emissions Rate Tables	50
	(a) Table Criteria	50
	(b) Construction of Additional Tables	51
	(c) Maximum Allowable Emissions Rate Tables	52
VII.	Additional Provisions	55
	(a) Data Requirements	55
	(b) Interpolation	56
	(c) Agreement to Combine Systems	56

Part		Page
VII.	Additional Provisions (Continued)	
	(d) Consultation With Other Districts	57
	(e) Permit Provisions	57
	(f) Continuous Monitoring of Ammonia	58
	(g) Exemptions	59
	(h) Prohibited Modification	60
VIII.	Demonstration Unit Requirements	61
	(a) Demonstration Unit Requirements	61
IX.	Option 4	66
	(a) Emission Reduction Requirements	66
	(b) Reduction Methods	67
	(c) Exceptions	67
	(d) Compliance Plan	68
	(e) Dates by Which Controls Must be Installed	70
	(f) Requirement for New Permits	70
	(g) Right to Petition For Variance	71

Part I. APPLICABILITY AND SEVERABILITY

(a) Geographical Limitations

Unless otherwise stipulated in this Rule, the following geographical limitations apply:

(1) Rule 1135.1 applies in the South Coast Air Basin only.

(2) Rule 59.1 applies in the Ventura County Air Pollution Control District only.

(b) Restricted References

Unless otherwise stipulated in this Rule, all references to Parts and Sections of this Rule mean those Parts and Sections of this Rule only.

(c) Severability

Except as otherwise provided in this rule, if any portion of this Rule is found to be unenforceable, such finding shall have no effect on the enforceability of the remaining portions of the Rule. These remaining portions of the Rule shall continue to be in full force and effect.

(d) Compliance With Other Rules and Regulations

Nothing in this Rule shall relieve a person from complying with Regulation XIII of the South Coast Air Quality Management District or with Rule 26 of the Ventura County Air Pollution Control District, whichever applies.

Part II. DEFINITIONS

Electric Power Generating System means one or more electric power generating units which have a common owner or operator, and which are located in the South Coast Air Basin and/or Ventura County Air Pollution Control District.

Existing System or Unit means any electric power generating system or unit, construction of which commenced prior to August 7, 1978.

Minimum Load means the minimum rate of electric power generation below which a system or unit cannot be continuously and safely operated. Minimum load shall be expressed in net megawatts.

Modified System or Unit means any existing electric power generating system or unit on which a modification is commenced on or after August 7, 1978. However, systems or units on which a modification is commenced for the purpose of complying with this Rule shall not be considered modified systems or units.

New System or Unit means any electric power generating system or unit, the construction of which is commenced on or after August 7, 1978.

Operating Range means all possible rates of electric power generation between the minimum load and the rated maximum load of any electric power generating system or unit. Operating range shall be expressed in net megawatts.

Oxides of Nitrogen Emissions Dispatch means the allocation of electric power demand to the various electric power generating units in any electric power generating system according to a method that will minimize the rate of emissions of oxides of nitrogen from the system.

Rated Maximum Load means the maximum continuous safe electric power generating capacity of a system or unit. Rated maximum load shall be expressed in net megawatts.

Rate of Emissions of Oxides of Nitrogen means the mass of oxides of nitrogen emitted in pounds per hour. In calculating this rate, the mass of oxides of nitrogen shall be expressed as an equivalent mass of nitrogen dioxide and shall be measured in a manner approved by the Executive Officer/Air Pollution Control Officer.

System means one or more electric power generating units that have a common owner or operator.

System-wide Composite Unit Table means a tabular presentation of the rate of emissions of oxides of nitrogen throughout the operating range of an electric power generating system. Criteria for preparing system-wide tables are contained in VI(a) and (b).

Unit means the minimum number of fossil fuel fired combustion devices or equipment necessary to produce electrical energy for sale or exchange.

Unit Table means a tabular presentation of the rate of emissions of oxides of nitrogen at each of 10 equally spaced points throughout the operating range of an electric power generating unit.

III. Options for Compliance

An owner or operator of a system must comply with one of the four options in this rule. A short summary of the four options is shown in Table III-1.

(a) Option Selection Requirements

(1) The owner or operator of an electric power generating system shall select either Option 1 or Option 2 or Option 3 or Option 4. Once an option is approved by the Executive Officer/Air Pollution Control Officer, that selection is final unless a change would not result in a delay in the installation of control equipment and the change is approved by the Executive Officer/Air Pollution Control Officer.

(2) Selection Notification Date

The owner or operator shall notify the Executive Officer/Air Pollution Control Officer of the option selected. Such selection must be made in writing on or before June 1, 1980.

Table III-1

Requirement	Option 1	Option 2	Option 3	Option 4
Number of Stages	2	2	1	1
Final Compliance Dates	Stage I - 12/31/83 Stage II - 1/1/90	Stage I - 12/31/83 Stage II - 1/1/88	1/1/90	1/1/90
Reduction Required	Stage I nearly 50% Stage II - 90%	Stage I - much less than 50% Stage II - 90%	90%	Annual average-90%; Annual peak day - 75%
Basis for Reduction	Reduction at all system loads	Reduction at all system loads	Reduction at all system loads	Reduction in total emissions & peak emissions
Credit for Reduced fossil fuel burning below 74-78 levels	Relax controls so emissions are same as without new energy	Relax controls so emissions are the same as without new energy	Relax controls so emissions are the same as without new energy	Pound for pound
Date of installation of controls for final compliance of 90% reduction	In time for final compliance in 1990	First scheduled outage of unit after 1983	First scheduled outage of unit after January 1, 1982	First scheduled outage of unit after January 1, 1982
Applicable parts of rule	I,II, III, IV, V, VI, VII, & VIII	I, II, III, IV, V, VI, VII, & VIII	I, II, III, IV, V(b), VI, & VII	I, II, III, & IX

Part IV. Control of Individual Units: Unit Tables and Emissions Dispatch

This part does not apply to Option 4.

(a) Unit Control: Emissions Allowed by Unit Table

A unit table is a tabular presentation of the rate of emissions of oxides of nitrogen at each of 10 or more equally spaced load points throughout the operating range of an electric power generating unit. The rate shall be shown in pounds of oxides of nitrogen per net megawatt hour.

(1) Compliance With Unit Table

An owner or operator of an electric power generating system shall not operate an electric power generating unit if at any point in the unit's operating load range the unit emits oxides of nitrogen at a rate greater than the rate allowed by the approved unit table.

(2) Required Tables; Required Approval

Prior to the operation of any new system or new or modified unit, the owner or operator of said system or unit shall submit to the Executive Officer/Air Pollution Control Officer, for consideration for his or her approval, additional or replacement tables for the affected units.

The owner or operator shall prepare unit tables in accordance with this Section, and as applicable:

(A) Stage I compliance requirements: V(a)(7)(I)

(B) Stage II compliance requirements: V(b)(7)(I)

(C) Demonstration unit compliance schedule: VIII(a)(5)(A)(ii)

(3) Noncompliance is a Violation

Operation of a unit in a manner that causes oxides of nitrogen to be emitted at a rate greater than allowed by the approved unit table is a violation of this Rule. Operation in this manner is a violation regardless of the operation of or emissions from any other unit in the system. Such violation exists regardless of the operation of or emissions from the same unit at any other load.

(4) Determining Rates of Emissions

To determine the rate of emissions of oxides of nitrogen from a unit, the Executive Officer/Air Pollution Control Officer may employ data obtained by in-stack monitors, continuous source testing equipment, or any other tests or equipment that the Executive Officer/Air Pollution Control Officer

determines are acceptable. The Executive Officer/ Air Pollution Control Officer shall consider the accuracy of such equipment and the manner of testing when making this determination.

(b) System-wide Control: Emissions Dispatch Plan

An oxides of nitrogen emissions dispatch plan shall be prepared for each system by the owner or operator of that system.

(1) Minimum Contents of Emissions Dispatch Plan

(A) A detailed methodology for oxides of nitrogen emissions dispatch for each unit in the system unless exempted by this Rule. The methodology shall provide adequate detail for a determination at any time by the Executive Officer/Air Pollution Control Officer of whether or not the system is being operated in accordance with the dispatch plan consistent with the units available at that time. The availability of units shall be determined by the owner or operator.

Such methodology shall also include a unit table for each unit. The unit table shall show actual measured emissions for a unit from which the

emissions have been measured or estimated emissions for a unit from which the emissions have not been measured.

Only the most current, approved emissions data shall be used.

(B) An assurance that available units in the system are dispatched and operated in a manner that minimizes the rate of emissions of oxides of nitrogen from the system.

(2) Plan Submittal and Operating Requirements

(A) Executive Officer Approval

Each emissions dispatch plan shall be submitted to the Executive Officer/Air Pollution Control Officer for consideration for approval.

(B) Initial Plan Submittal; Date of Submittal

An initial emissions dispatch plan shall be submitted to the Executive Officer/Air Pollution Control Officer prior to June 1, 1980.

(C) Revised Plan Submittal

A revised emissions dispatch plan shall be submitted to the Executive Officer/Air Pollution Control Officer within 30 days after a new or modified unit is added to the system.

(D) Operational Date of Plan

Effective 30 days after plan submittal, the electric power generating system shall be operated according to the submitted plan. Effective 30 days after approval by the Executive Officer/Air Pollution Control Officer, the system shall be operated according to the approved plan.

(3) Noncompliance with Approved Plan is a Violation.

Operation of an electric power generating system that is determined by the Executive Officer/Air Pollution Control Officer to be not in accordance with the approved emissions dispatch is a violation of this Rule.

(4) Requirements for Daily Records

The owner or operator of a system shall maintain daily records of the manner in which the system is operated. These daily records are to be maintained for the purpose of determining compliance with the approved emissions dispatch plan. The type of information to be recorded and the form in which it is to be recorded shall be specified by the Executive Officer/ Air Pollution Control Officer. Such records shall be

maintained for at least two years from the date of recording. Such records shall be available for inspection and/or reproduction upon the request of the Executive Officer/Air Pollution Control Officer or his or her authorized representative.

(5) Units Exempt From Emissions Dispatch Plan

Simple cycle gas turbines are exempt from the emissions dispatch plan; see VII(g)(2).

Alternative energy projects as defined in VII(g)(1) are exempt from the emissions dispatch plan.

V. Requirements and Compliance Schedules

This part does not apply to Option 4

(a) Stage I Requirements and Compliance Schedule

This section V(a) does not apply to Option 3.

The owner or operator of an existing electric power generating system shall comply with the following requirements for Stage I:

(1) Stage I Emissions Reductions

Emissions of oxides of nitrogen shall be reduced to no more than the emissions allowed by the Stage I rates in Part VI. This reduction shall be accomplished as expeditiously as practicable but not later than December 31, 1983.

For Option 1 and Option 2, the following requirements shall be fulfilled:

(A) Prior to June 1, 1980. Submit a final control plan to the executive Officer/Air Pollution Control Officer for his or her approval. Also submit a copy of this final control plan to the Executive Officer of the Air Resources Board. The final control plan shall include as a minimum;

(i) A description of compliance steps. This description shall include a list of the steps that will be

taken at each electric power generating unit to comply with the Stage I compliance schedule. The description must contain a construction schedule. The construction schedule must show that the construction and equipment installation phases of the final control plan will be completed prior to September 1, 1983. The description of compliance steps must also show that the Stage I maximum emission rates allowed by Part VI will be achieved by December 31, 1983.

(ii) Unit tables. A unit table shall be submitted for each unit in the system. Each unit table shall show the estimated emissions when the controls required for Stage I compliance are applied and the unit is burning oil.

Each unit table shall show the rate of emissions of oxides of nitrogen at each of 10 equally spaced load points from minimum load to rated maximum load. The rate shall be shown in pounds of oxides of nitrogen per net megawatt hour. The rate shown must be the rate to which the unit shall be controlled to achieve compliance with

the Stage I maximum emissions rates in Part VI for Option 1 or Option 2.

(B) Prior to July 1, 1980. Sign initial contracts for the construction and installation of equipment that will lead to the achievement of the Stage I maximum emission rates as required by Part VI of this Rule; issue orders for the purchase of component parts necessary to accomplish such reductions.

(C) Prior to September 1, 1983. Complete construction and installation of emissions control equipment and component parts as indicated on the construction schedule for the final control plan.

(D) Prior to December 31, 1983. Demonstrate compliance by achieving the Stage I maximum emission rates of Part VI of this Rule. Such demonstration shall also include the submission to the Executive Officer/Air Pollution Control Officer for his or her approval a unit table for each unit. Measured emissions at each unit shall not exceed the emissions at any point or increment on the unit table. In addition, a

system-wide composite unit table shall show that emissions from the system shall not exceed the Stage I maximum emission rates of Part VI of this Rule. This system-wide composite unit table shall be constructed in accordance with the criteria set forth in VI(a).

(2) Requirements for an Approvable Final Control Plan

An approvable final control plan shall:

(A) Result in compliance with Stage I emissions reduction requirements as expeditiously as practicable;

(B) Satisfy the minimum requirements for a description of compliance steps pursuant to V(a)(1)(A)(i); satisfy the minimum requirements for unit tables pursuant to V(a)(1)(A)(ii); and

(C) With reasonable certainty prevent localized violations of ambient air quality standards.

(D) Show the schedule of conservation efforts, construction or procurement of each new source or conservation of electrical energy which will result in a system-wide reduction of emissions of oxides of nitrogen emitted

in the South Coast Air Basin/Ventura County below average 1974 through 1978 annual average emissions, pursuant to §'s V(a)(6) & V(a)(7). The schedule of construction or procurement shall show:

(i) the date of approval of officers of the utility to proceed with the construction or procurement;

(ii) the date by which contracts shall be signed for new electrical energy for which construction is not required;

(iii) the latest dates for the following construction steps:

- Approval of contracts for construction
- Commencement of construction
- Completed installation of major equipment items such as turbines or boilers
- Generation of electrical energy needed to accomplish the emission reduction claimed in subsection V(a)(2)(E).

(E) For each of the years covered by the final control plan state the annual system-wide reduction in nitrogen oxide emissions which shall be achieved as a result of each new source of energy or conservation for the South Coast Air Basin/Ventura County.

(F) State the maximum amount of emissions of oxides of nitrogen which shall be emitted from the utility's system on any calendar day for each of the years to the final date of the plan. Emissions greater than the amount approved constitute a violation of this rule.

(G) State the maximum amount of electrical energy which shall be generated by the utility's combustion units in the South Coast Air Basin/Ventura County in each of the years covered by the plan.

(H) Describe the equipment which shall be installed and operated on the utility's existing units to reduce emissions by the amount claimed for new electrical energy or conservation in the event that such new energy or conservation or alternative new energy or conservation will not be obtained by the date specified in the schedule required by §V(a)(2)(D). Also show the latest date by which such equipment shall be installed and operated.

(3) Unapprovable Final Control Plan is a Violation

Submission of a final control plan that does not meet the criteria specified in IV(b)(2) above is a violation of this

Rule. Such violation shall commence on June 1, 1980. Such violation shall remain in effect until an acceptable final control plan has been approved by the Executive Officer/Air Pollution Control Officer.

(4) Reduced Emissions Reduction Requirements for Stage I Compliance

The emission reduction requirements for Stage I compliance may be reduced for a unit(s) provided all of the following are fulfilled:

(A) The final control plan meets the requirements of V(a)(1)(A) and V(a)(2);

(B) All of the emissions reduction equipment installed to comply with Stage I maximum allowable emissions rates of Part VI is operated at its full emissions reductions potential;

(C) Additional emissions reduction methods have been applied to all units if such methods are:

(i) Capable of being installed within the time left for Stage I compliance, that is, by December 31, 1983; and

(ii) More cost-effective than the least cost-effective control that has been installed to comply with Stage I other than the use of equipment to inject ammonia in the presence of a catalyst (selective catalytic reduction). Cost-effectiveness shall be computed in terms of 1979 dollars per pound of oxides of nitrogen removed.

(D) The Executive Officer/Air Pollution Control Officer has published for at least 30 days a notice asking for public comment on the proposal to excuse the owner or operator from compliance with unit tables for the affected units;

(E) The Executive Officer/Air Pollution Control Officer determines after a review of all comments and all evidence that compliance with the subject unit table(s) is not reasonably achieveable. This review shall include an evaluation of emission control techniques used elsewhere in this country and in other countries;

(F) The Executive Officer of the Air Resources Board

concurs with the determination made by the Executive Officer/Air Pollution Control Officer;

(G) When the Stage I emission reduction requirements for a unit have been reduced under the provisions of V(a)(4)(A) through V(a)(4)(F) above, the Stage II compliance requirements for the affected unit are altered as follows:

(i) On the first scheduled shutdown after January 1, 1984, control equipment for meeting Stage II maximum emissions rates of Part VI shall be installed on that unit;

(ii) Within 90 days of being excused under the provisions of V(a)(4)(A) through V(a)(4)(F), the system owner or operator shall submit a plan to the Executive Officer/Air Pollution Control Officer. The plan shall show the steps to be taken to install the control equipment necessary to meet Stage II emission rates for the affected unit; and

(iii) Within 90 days of completion of equipment installation to meet Stage II emissions rates, the system owner or operator shall demonstrate compliance with the maximum emissions rates of Stage II for the affected unit.

(5) Units Exempted from Stage I Compliance

Existing combined cycle generating units are exempt from Stage I requirements.

Alternative energy projects as defined in VII(g)(1) are exempt from Stage I requirements.

(6) Additional Replacement of In-Basin Generated Electrical Energy by New Electrical Energy or Conservation is an Acceptable Method of Reducing Emissions

Reduction of South Coast Air Basin/Ventura County emissions by the replacement of in-basin generated electrical energy by new electrical energy or conservation is an acceptable method of achieving emission reductions in the final control plan provided that the electric utility owner or operator demonstrates to the satisfaction of the Executive Officer/Air Pollution Control Officer that:

(A) The owner or operator has a legally enforceable entitlement to such replacement power which lasts for the period during which the reduction in emissions is claimed;

(B) Legally enforceable commitments are made in the final control plan to install and operate control equipment on in-basin unit(s) or obtain equivalent alternative energy to reduce emissions by the amount claimed for replacement power in the event that such replacement power is not obtained by the date specified in the final control plan for achieving such claimed emissions reductions; and

(C) Emissions are reduced by the amounts claimed in the final control plan and in accordance with the schedule in that plan.

(D) The utility will implement programs which will reduce consumption of electrical energy by the amount claimed.

Prior to approval of a final control plan the Executive Officer/Air Pollution Control Officer may require the surrender for modification of permits to construct and/or operate pursuant to subsection VII(e).

(7) Methodology for Claiming Credit for Conservation Efforts or New Electrical Energy

The owner or operator who claims emission reductions for conservation efforts or new energy shall compute such reductions according to the method given here. The method is described in text form, and an illustration is provided. The sample is calculated for one load increment for one unit. If credit for conservation efforts or new energy is to be claimed, these calculations shall be performed for each load increment for each unit.

The Following Steps Assume No Replacement Power is Available

A. Determine the hourly emissions in pounds with controls applied to each of the 10 load increments for the unit. This value is derived from the unit table used for compliance with the maximum allowable emissions rate tables in Part VI of the Rule assuming no replacement power is available. Enter this number in the appropriate block in Row A. In the sample problem, the figure is 100 pounds/hour at load increment 7.

Example of Calculations for Replacement Electrical Energy

Unit xyz

Assume No Replacement Power Available

		LOAD INCREMENT										Sum of annual emissions for unit 3/
		1	2	3	4	5	6	7	8	9	10	
A 1/	Hourly emissions (pounds) with controls applied assuming no replacement power							100				
B	Average annual hours of operation in 1974 through 1978*							500				
C	Average annual emissions without replacement power (A times B)							50,000				D 3/
E	Average annual emissions from the system = sum of unit annual emissions (D) for all units											

Assume Replacement Power Available

F 2/	Hourly emissions (pounds) with relaxed controls assuming replacement power							150				
G	Annual hours of operation in 1984 with replacement power							200				
H	Annual emissions with replacement power (F times G)							30,000				I 3/
J	Average annual emissions from the system = sum of unit annual emissions (I) for all units											

1/ Row A from unit tables used for compliance with Part V of the rule.
2/ Row F is from unit tables with less stringent controls applied than in Row A.
3/ Annual emissions from a unit equals the sum of annual emissions at each of the 10 load increments.

* See Paragraph V(a)(7)(B)

B. Estimate the average annual hours of operation at each of the 10 load increment in base years 1974 through 1978 by a method acceptable to the Executive Officer/Air Pollution Control Officer. Estimates must agree with actual capacity factors for units. Enter this estimate in the appropriate block in Row B. In this sample, the hours at load increment 7 are 500 hours. The number of hours shall be consistent with capacity factors in the Common Forecasting Methodology III approved by the Energy Commission.

C. Determine the average annual emissions for each of the 10 load increments if no replacement power is supplied. To do this, multiply the appropriate entries in Row A by the appropriate entries in Row B. In this sample,

100 lbs/hr times 500 hrs/yr = 50,000 lbs/yr
at load increment 7

D. Determine the average annual emissions for the unit. This is done by adding the average annual emissions at each of the 10 load increments calculated in Step C.

E. Determine the systems total average annual emissions if no replacement power is available and adequate controls are applied to each unit to comply with the maximum allowable emissions rate table in Part VI of the Rule. To do this, add the average annual emissions from each unit in the system as calculated in Step D.

The Following Steps Assume Replacement Power is Available

F. Determine the hourly emissions in pounds with relaxed controls applied to each of the 10 load increments for the unit. This value is derived from relaxing controls that are assumed for the unit in Step A. Enter this number in the appropriate block on Row F. In the sample problem, the emissions for the less stringently controlled unit at load increment 7 is now 150 pounds/hr.

G. Determine the average annual hours of operation at each of the 10 load increments in 1984 assuming replacement power is available. Enter this estimate in the appropriate block in Row G. In this sample, the hours at load increment 7 with replacement power available is 200 hours.

H. Determine the average annual emissions for each of the 10 load increments if replacement power is supplied and controls are relaxed. To do this, multiply the appropriate entries in Row F by the appropriate entries in Row G. In this sample,

150 lbs/hr times 200 hrs = 30,000 lbs/yr
at load increment 7

I. Determine the average annual emissions for the unit with relaxed controls and new hours of operation by adding the average annual emissions at each of the 10 load increments calculated in Step H.

J. Determine the system's total annual emissions if replacement power is available and controls are relaxed on some units. To do this, add the annual emissions from each unit as calculated in Step I.

(8) Violation of Control Plan is a Violation of Rule

A violation of an approval final control plan is a violation of this rule. Where the Executive Officer/Air Pollution Control Officer determines that a violation of the schedules of equipment installation or procurement of new power shown in the Final Control Plan has occurred, as a result of circumstances beyond the control of the affected utility, a "Notice to Comply" shall first be issued to the violating utility before the issuance of any "Notice of Violation." Failure to correct the violation within sixty days from the date of issuance of "Notice to Comply" shall be followed by a "Notice of Violation" of the rule and enforcement action.

(b) Stage II Requirements and Compliance Schedule

The owner or operator of an existing electric power generating system shall comply with the following requirements for Stage II.

(1) Stage II Emissions Reductions

Emissions of oxides of nitrogen shall be reduced to no more than the emissions allowed by the Stage II rates in Part VI. This reduction shall be accompanied as expeditiously as practicable but not later than January 1, 1990 for Options 1 and 3 and January 1, 1988 for Option 2.

For Options 1, 2, and 3 the following requirements shall be fulfilled:

(A) (i) Prior to July 1, 1984, for Option 1 or July 1, 1981, for Option 2 or January 1, 1981 for Option 3. Submit a final control plan to the Executive Officer/Air Pollution Control Officer for his or her approval. Also submit a copy of this final control plan to the Executive Officer of the Air Resources Board.

(ii) For Option 2, the final control plan shall show the completion of all the work that cannot be done while the unit is operating but that is necessary for the proper operation of control equipment. This work shall be done during the first scheduled shutdown of the unit after January 1, 1984.

(iii) For Option 3, the final control plan shall show the completion of all the work that cannot be done while the unit is operating but that is necessary for the proper operation of control equipment. This work shall be done during the first scheduled shutdown of the unit after January 1, 1982. For the purpose of this section, a scheduled shutdown shall be a scheduled major maintenance shutdown which the utility uses for the purpose of preventative maintenance and which is scheduled at least eighteen months prior to the shutdown. Postponement of a shutdown does not exempt the owner or operator of a system from the requirement to install controls.

In the event that the owner or operator of such utility can demonstrate to the District's Hearing Board that controls on a unit cannot be installed during the first scheduled shutdown because: 1, The control equipment cannot be acquired from supplier(s) in time for the shutdown, or 2, The amount of time required for the installation of equipment would cause the duration of the shutdown to be extended such that the reliability of the system would be jeopardized, then the Hearing Board may extend the date by which controls must be installed on that unit by not more than two years. Such a variance shall not affect the requirement to install control equipment on other units. If the provisions of this paragraph relating to Option 3 are found to be invalid or unenforceable, Option 3 as specified in this Rule shall not be available as a method of compliance with the provisions of this Rule.

Additional Minimum Requirements for a Final Control Plan for Stage II include:

(iv) A Description of Compliance Steps.

This description shall include a list of the steps that will be taken at each electric power generating unit to comply with the Stage II compliance schedule. The description must contain a construction schedule. The construction and equipment installation phases of the final control plan will be completed prior to October 1, 1989, for Option 1, or prior to October 1, 1987, for Option 2 or prior to October 1, 1987 for Option 3. This description shall also show that the Stage II maximum emission rates allowed by Part VI of this Rule shall be achieved by January 1, 1990, for Options 1 and 3 or by January 1, 1988 for Option 2.

(v) Unit Tables

A unit table shall be submitted for each unit in the system. Each unit table shall show the estimated emissions when the controls required for Stage II compliance are applied and the unit is burning oil.

Each unit table shall show the rate of emissions

oxides of nitrogen at each of 10 equally spaced load points from minimum load to rated maximum load. The rate shall be shown in pounds of oxides of nitrogen per net megawatt hour. The rate shown shall be the rate to which the unit shall be controlled to achieve compliance with the Stage II maximum emissions rates in Part VI.

(vi) Schedule of Scheduled Shutdowns

The plan shall include a schedule of scheduled shutdowns of units where such shutdowns have a duration of six weeks or more.

(B) Prior to January 1, 1985, for Option 1 or prior to January 1, 1982, for Option 2 or January 1, 1981 for Option 3. Sign initial contracts for the construction and installation of equipment that will lead to the achievement of the Stage II maximum emission rates as required by Part VI of this Rule; issue orders for the purchase of component parts necessary to accomplish such reductions.

(C) Prior to October 1, 1989, for Option 1 or prior to October 1, 1987, for Option 2 or prior to October 1, 1987 for Option 3. complete construction and installation of emissions control equipment and component parts as indicated on the construction schedule of the final control plan.

(D) Prior to January 1, 1990, for Options 1 and 3 or prior to January 1, 1988, for Option 2. Demonstrate compliance by achieving the Stage II maximum emission rates of Part VI of this Rule. Such demonstration shall also include the submission to the Executive Officer/Air Pollution Control Officer for his or her approval a unit table for each unit. Measured emissions at each unit shall not exceed the emissions at any point or increment on the unit table. In addition, a system-wide composite unit table shall show that emissions from the system shall not exceed the Stage II maximum emission rates of Part VI of this Rule. This system-wide composite unit table shall be constructed in accordance with the criteria set forth in VI(a).

(2) Requirements for an Approval Final Control Plan

An approvable final control plan shall:

(A) Result in compliance with Stage II emissions reduction requirements as expeditiously as practicable;

(B) Satisfy the minimum requirements for a description of compliance steps pursuant to V(b)(1)(A)(i); satisfy the minimum requirements for unit tables pursuant to V(b)(1)(A)(ii); and

(C) With reasonable certainty prevent localized violations of ambient air quality standards.

(D) Show the schedule of conservation efforts, construction or procurement of each new source or conservation of electrical energy which will result in a system-wide reduction of emissions of oxides of nitrogen emitted in the South Coast Air Basin/Ventura County below average 1974 through 1978 annual average emissions, pursuant to Sections V(b)(6) and V(b)(7). The schedule of construction or procurement shall show:

i) the date of approval of officers of the utility to proceed with the construction or procurement;

ii) the date by which contracts shall be signed for new electrical energy for which construction is not required;

iii) the latest dates for the following construction steps:

- Approval of contracts for construction
- Commencement of construction
- Completed installation of major equipment items such as turbines or boilers
- Generation of electrical energy needed to accomplish the emission reduction claimed in subsection V(b)(2)(E)

(E) For each of the years covered by the final control plan state the annual amount of electrical energy which will be produced from each new source of energy or conservation for the South Coast Air Basin/Ventura County.

(F) State the maximum amount of emissions of oxides of nitrogen which shall be emitted from the utility's system on any calendar day for each of the years to the final date of the plan. Emissions greater than the amount approved shall constitute a violation of this rule.

(G) State the maximum amount of electrical energy which shall be generated by the utility's combustion units in the South Coast Air Basin/Ventura County in each of the years covered by the plan.

(H) Describe the equipment which shall be installed and operated on the utility's existing units to reduce emissions by the amount claimed for new electrical energy or conservation in the event that such new

energy or conservation or alternative new energy or conservation will not be obtained by the date specified in the schedule required by Section V(b)(2)(D). Also show the latest date by which such equipment shall be installed and operated.

(3) Unapprovable Final Control Plan is a Violation

An owner or operator who submits a final control plan that does not meet the criteria specified in V(b)(2) above is in violation of this Rule. Such violation shall commence on July 1, 1984 for Option 1 or July 1, 1981 for Option 2 or January 1, 1981 for Option 3. Such violation shall remain in effect until an acceptable final control plan has been approved by the Executive Officer/Air Pollution Control Officer.

(4) Reduced Emissions Reduction Requirements for Stage II Compliance

Section V(b)(4) shall not apply to Option 3

The emissions reductions required for Stage II compliance may be reduced provided all of the following are fulfilled:

(A) Establishment of Demonstration Unit Performance

Demonstration unit performance shall be established as either:

(i) The demonstration unit has achieved at least 90 percent control; or

(ii) The demonstration unit has been excused from compliance pursuant to VIII(a)(7).

(B) Request by Owner or Operator

The owner or operator may request from the Executive Officer/Air Pollution Control Officer a determination as to whether the affected system can achieve the Stage II maximum allowable emissions rates required by Part VI.

(C) Requirement for Public Hearing

Within 60 days of receiving the request specified in V(b)(4)(B) above, the Executive Officer/Air Pollution Control Officer shall conduct a public hearing on the matter. The owner or operator or any other interested party shall have the right to appear and present evidence at such hearing.

(D) Burden of Proof

The burden of proof shall be upon the party seeking to be excused from compliance with Stage II emission rates. This party shall show that compliance with these rates is not technically feasible or is not cost-effective within the timetable set for compliance by this Rule.

(E) Determination by Executive Officer

In making a determination, the Executive Officer/Air Pollution Control Officer shall consider the following factors:

(i) The performance and cost-effectiveness of any available control measures or combinations of control measures including but not limited to the technology employed on the demonstration unit;

(ii) The efforts taken by the owner or operator to effect compliance; and

(iii) The emissions of pollutants other than oxides of nitrogen.

The Executive Officer/Air Pollution Control Officer shall make a determination within 30 days after the public hearing.

If the Executive Officer/Air Pollution Control Officer determines that compliance with Stage II emissions rates is not technically feasible or cost-effective, the Executive Officer/Air Pollution Control Officer shall modify the Stage II maximum allowable emission rates in Part VI of this Rule. The modifications shall be made to the extent dictated by the evidence.

(5) Units Exempted from Stage II Compliance

Existing combined cycle generating units are exempt from Stage II requirements.

Alternative energy projects as defined in VII(g)(1) are exempt from Stage II requirements.

(6) Additional Replacement of In-Basin Generated Electrical Energy by New Electical Energy or Conservation is an Acceptable Method of Reducing Emissions

Reduction of South Coast Air Basin/Ventura County emissions by the replacement of in-basin generated electrical energy by new electrical energy or conservation is an acceptable method of achieving emission reductions in the final control plan provided

that the electric utility owner or operator demonstrates to the satisfaction of the Executive Officer/Air Pollution Control Officer that:

(A) The owner or operator has a legally enforceable entitlement to such replacement power which lasts for the period during which the reduction in emissions is claimed;

(B) Legally enforceable commitments are made in the final control plan to install and operate control equipment on in-basin unit(s) or obtain equivalent alternative energy to reduce emissions by the amount claimed for replacement power in the event that such replacement power is not obtained by the date specified in the final control plan for achieving such claimed emissions reductions; and

(C) Emissions are reduced by the amounts claimed in the final control plan and in accordance with the schedule in that plan.

(D) The utility will implement programs which will reduce consumption of electrical energy by the amount claimed.

Prior to approval of a final control plan the Executive Officer/Air Pollution Control Officer may require the surrender for modification of permits to construct and/or operate pusuant to subsection VII(e).

(7) Methodology for Claiming Credit for Conservation Efforts or New Electrical Energy

The owner or operator who claims emission reductions for conservation efforts or new energy shall compute such reductions according to the method given here. The method is described in text form, and an illustration is provided. The sample is calculated for one load increment for one unit. If credit for conservation efforts or new energy is to be claimed, these calculations shall be performed for each load increment for each unit.

The Following Steps Assume No Replacement Power is Available

A. Determine the hourly emissions in pounds with controls applied to each of the 10 load increments for the unit. This value is derived from the unit table used for compliance with the maximum allowable emissions rate

tables in Part VI of the Rule assuming no replacement power is available. Enter this number in the appropriate block in Row A. In the sample problem, the figure is 100 pounds/hour at load increment 7.

B. Estimate the average annual hours of operation at each of the 10 load increments in base years 1974 through 1978 by a method acceptable to the Executive Officer/Air Pollution Control Officer. Estimates must agree with the actual capacity factors of the units. Enter this estimate in the appropriate block in Row B. In this sample, the hours at load increment 7 are 500 hours. The number of hours shall be consistent with capacity factors in the Common Forecasting Methodology III approved by the Energy Commission.

C. Determine the average annual emissions for each of the 10 load increments if no replacement power is supplied. To do this, multiply the appropriate entries in Row A by the appropriate entries in Row B. In this sample,

100 lbs/hr times 500 hrs/yr = 50,000 lbs/yr
at load increment 7

D. Determine the average annual emissions for the unit. This is done by adding the average annual emissions at each of the 10 load increments calculated in Step C.

Example of Calculations for Replacement Electrical Energy

Unit xyz

Assume No Replacement Power Available

		LOAD INCREMENT										Sum of annual emissions for unit 3/
		1	2	3	4	5	6	7	8	9	10	
A 1/	Hourly emissions (pounds) with controls applied assuming no replacement power							100				
B	Average annual hours of operation in 1974 through 1978*							500				
C	Average annual emissions without replacement power (A times B)							50,000				D 3/
E	Average annual emissions from the system = sum of unit annual emissions (D) for all units											

Assume Replacement Power Available

F 2/	Hourly emissions (pounds) with relaxed controls assuming replacement power							150				
G	Annual hours of operation in 1990 for Option 1 & 3 or 1988 for Option 2 with replacement power							200				
H	Annual emissions with replacement power (F times G)							30,000				I 3/
J	Average annual emissions from the system = sum of unit annual emissions (I) for all units											

1/ Row A from unit tables used for compliance with Part V of the rule.
2/ Row F is from unit tables with less stringent controls applied than in Row A.
3/ Annual emissions from a unit equals the sum of annual emissions at each of the 10 load increments.

* See Paragraph V(b)(7)(B)

E. Determine the systems total average annual emissions if no replacement power is available and adequate controls are applied to each unit to comply with the maximum allowable emissions rate table in Part VI of the Rule. To do this, add the average annual emissions from each unit in the system as calculated in Step D.

The Following Steps Assume Replacement Power is Available

F. Determine the hourly emissions in pounds with relaxed controls applied at each of the 10 load increments for the unit. This value is derived from relaxing controls that are assumed for the unit in Step A. Enter this number in the appropriate block on Row F. In the sample problem, the emissions for the less stringently controlled unit at load increment 7 is now 150 pounds/hr.

G. Determine the average annual hours of operation at each of the 10 load increment in 1990 for Option 1 and 3 or 1988 for Option 2 assuming replacement power is available. Enter this estimate in the appropriate block in Row G. In the sample, the hours at load increment 7 with replacement power available is 200 hours.

H. Determine the average annual emissions for each of the 10 load increments if replacement power is supplied and controls are relaxed. To do this, multiply the appropriate entries in Row F by the appropriate entries in Row G. In this sample,

150 lbs/hr times 200 hrs = 30,000 lbs/yr
at load increment 7

I. Determine the average annual emissions for the unit with relaxed controls and new hours of operation by adding the average annual emissions at each of the 10 load increments calculated in Step H.

J. Determine the system's total annual emissions if replacement power is available and controls are relaxed on some units. To do this, add the annual emissions from each unit as calculated in Step I.

K. The system's total annual emissions with replacement power and relaxed controls shall be less than or equal to the system's total annual emissions with no replacement power and with adequate controls applied to each unit to meet the maximum allowable emissions rate tables in Part (VI) of the Rule. Specifically J shall be less than or equal to E.

(8) Violation of Control Plan is a Violation of Rule

A violation of an approved final control plan is a violation of this rule. Where the Executive Officer/Air Pollution Control Officer determines that a violation of the schedules of equipment installation or procurement of new power shown in the Final Control Plan has occurred, as a result of circumstances beyond the control of the affected utility, a "Notice to Comply" shall first be issued to the violating utility before the issuance of any "Notice of Violation." Failure to correct the violation within sixty days from the date of issuance of "Notice to Comply" shall be followed by a "Notice of Violation" of the rule and enforcement action.

(9) At any time after January 1, 1982, the owner or operator may petition the Air Resources Board to amend the requirements of this rule, based upon circumstances which have changed since the date of adoption of this rule, including, but not by way of limitation, the following:

(A) The cost-effectiveness or technical feasibility of emission control equipment comtemplated in any control plan submitted pursuant to this rule.

(B) The effect of power plant NOx emission on federal and state ambient air quality standards and the cost-effectiveness of power plant NOx reduction to achieve or maintain such ambient air quality standards.

(C) Federal or state law, rules, regulations, or policy affecting the utilization of gas or oil as power plant fuel.

Part VI. MAXIMUM ALLOWABLE EMISSIONS RATE TABLES

This part does not apply to Option 4.

(a) Table Criteria

The criteria set forth here were assumed in the construction of the maximum allowable emissions rate tables:

(1) All existing electric power generating units were considered to be available and burning oil;

(2) Each unit of the system was assumed to have nine equal increments of load between the unit's minimum load and its rated maximum load and one increment of load between zero load and minimum load;

(3) The incremental rate of emissions was determined for each increment of load assumed in Criterion 2 above. This rate is based on the assumption that emission controls required for compliance with the appropriate stage are installed and properly operating on the unit. The rate is calculated in incremental pounds of emissions of oxides of nitrogen per incremental net megawatt hour;

(4) A unit table was prepared for each electrical power generating unit. Each unit table is based on Criteria 1, 2, and 3 above. Each unit table was constructed to show the rate of emissions at each of 10 equally spaced load points from minimum load to maximum rated load;

(5) The increments of load identified in Criteria 2 and 3 above were ranked in order of increasing incremental pounds per net megawatt hour;

(6) Individual unit tables were combined for each size electrical power generating system shown in the maximum allowalbe emissions rate tables; and

(7) Demand for electrical energy was assumed to be filled by changing load in the increments identified in Criterion 2 above and in the order determined in Criterion 5 above. For the purpose of filling the next highest system-wide increment of deamnd, no unit was assumed to be reduced in load. In addition, no increment of load was used unless all lower increments for that same unit had been used.

(b) Construction of Additional Tables

The construction of any additional maximum allowable emissions rate tables or system-wide composite unit tables shall be accomplished in accordance with the criteria in V(a) above.

In addition, any other method of adding increments of capacity of units to satisfy system-wide load can be used provided it is shown to yield equivalent results.

Part VI MAXIMUM ALLOWABLE EMISSIONS RATE TABLES

TABLE I

MAXIMUM ALLOWABLE RATE OF EMISSIONS OF OXIDES OF NITROGEN ASSUMING THAT ALL ELECTRIC POWER GENERATING UNITS IN THE SYSTEM ARE AVAILABLE, AS A FUNCTION OF NET SYSTEM LOAD FOR ELECTRIC POWER GENERATING SYSTEMS HAVING A TOTAL GENERATING CAPACITY OF GREATER THAN 5000 MEGAWATTS AS OF JANUARY 1, 1978

NET SYSTEM LOAD IN MEGAWATTS	MAXIMUM ALLOWABLE RATE OF OXIDES OF NITROGEN EMISSIONS POUNDS/HOUR, ON OR AFTER DECEMBER 31, 1983		MAXIMUM ALLOWABLE RATE OF OXIDES OF NITROGEN EMISSIONS POUNDS/HOUR, ON OR AFTER JANUARY 1, 1990 FOR Options for 1 & 3 AFTER JANUARY 1, 1988 FOR OPTION 2
	Option 1	Option 2	
500	733	808	88
1000	1,234	1,430	173
1500	1,736	2,052	255
2000	2,238	2,673	332
2500	2,758	3,295	424
3000	3,331	3,917	519
3500	3,904	4,642	633
4000	4,478	5,402	731
4500	5,054	6,197	839
5000	5,632	7,042	948
5500	6,211	7,887	1071
6000	6,800	8,732	1186
6500	7,400	9,577	1318
7000	8,210	10,422	1459
7500	9,002	11,267	1627
8000	10,370	12,650	1871
8500	12,762	15,115	2312
9000 or Greater	30,217	36,463	5709

NOTE: To determine the maximum allowable emissions for net system loads other than those shown, use linear interpolation between the two net system loads that bracket the net system load desired.

TABLE II

MAXIMUM ALLOWABLE RATE OF EMISSIONS OF OXIDES OF NITROGEN ASSUMING THAT ALL ELECTRIC POWER GENERATING UNITS IN THE SYSTEM ARE AVAILABLE, AS A FUNCTION OF NET SYSTEM LOAD FOR ELECTRIC POWER GENERATING SYSTEMS HAVING A TOTAL GENERATING CAPACITY OF LESS THAN 5000 MEGAWATTS AND EQUAL TO OR MORE THAN 500 MEGAWATTS AS OF JANUARY 1, 1978

NET SYSTEM LOAD IN MEGAWATTS	MAXIMUM ALLOWABLE RATE OF OXIDES OF NITROGEN EMISSIONS POUNDS/HOUR, ON OR AFTER DECEMBER 31, 1983		MAXIMUM ALLOWABLE RATE OF OXIDES OF NITROGEN EMISSIONS POUNDS/HOUR, ON OR AFTER JANUARY 1, 1990 FOR Options 1 & 3 AFTER JANUARY 1, 1988 FOR OPTION 2
	Option 1	Option 2	
200	271	305	27
400	482	588	54
600	693	871	88
800	912	1,154	130
1000	1,133	1,437	159
1200	1,355	1,720	205
1400	1,576	2,003	243
1600	1,790	2,286	290
1800	1,969	2,570	335
2000	2,195	2,853	390
2200	2,407	3,136	439
2400	2,749	3,419	507
2600	3,281	3,854	581
2800	3,945	4,533	674
3000	4,783	5,372	784
3200	5,890	6,479	919
3400 or Greater	8,401	8,989	1199

NOTE: To determine the maximum allowable emissions for net system loads other than those shown, use linear interpolation between the two net system loads that bracket the net system load desired.

TABLE III

MAXIMUM ALLOWABLE RATE OF EMISSIONS OF OXIDES OF NITROGEN ASSUMING THAT ALL ELECTRIC POWER GENERATING UNITS IN THE SYSTEM ARE AVAILABLE, AS A FUNCTION OF NET SYSTEM LOAD FOR ELECTRIC POWER GENERATING SYSTEMS HAVING A TOTAL GENERATING CAPACITY OF LESS THAN 500 MEGAWATTS AS OF JANUARY 1, 1978

NET SYSTEM LOAD IN MEGAWATTS	MAXIMUM ALLOWABLE RATE OF OXIDES OF NITROGEN EMISSIONS POUNDS/HOUR, ON OR AFTER DECEMBER 31, 1983		MAXIMUM ALLOWABLE RATE OF OXIDES OF NITROGEN EMISSIONS POUNDS/HOUR, ON OR AFTER JANUARY 1, 1990 FOR Options 1 & 3 AFTER JANUARY 1, 1988 FOR OPTION 2
	Option 1	Option 2	
20	64	82	7
40	103	137	12
60	154	192	18
80	206	247	26
100	257	302	35
120	311	368	46
140	370	439	58
160	428	510	72
180	503	581	86
200	587	681	105
220	756	850	130
240 or greater	996	1,090	166

NOTE: To determine the maximum allowable emissions for net system loads other than those shown, use linear interpolation between the two net system loads that bracket the net system load desired.

Part VII. ADDITIONAL PROVISIONS

This part does not apply to Option 4.

(a) Data Requirements

(1) Data to be Obtained by Measurements

Any oxides of nitrogen emissions data required by this Rule shall be based on measurements of emissions on applicable units. Such measurements shall be conducted at times and in a manner acceptable to the Executive Officer/Air Pollution Control Officer

The term "Any oxides of nitrogen emissions data" used above includes that data on which unit tables are based.

(2) Need for Additional Information

Additional information that is deemed necessary by the Executive Officer/Air Pollution Control Officer to ascertain the validity of submitted data shall be furnished to the Executive Officer/Air Pollution Control Officer the owner or operator of the effected unit within 60 days of the Executive Officer's/ Air Pollution Control Officer's written request.

(3) Resolving Discrepancies in Data

If the Executive Officer/ Air Pollution Control Officer determines that the rate of emissions of oxides of nitrogen from any unit is different from the rate shown

in the data submitted for approval, the Executive Officer/Air Pollution Control Officer shall notify in writing the owner or operator that a difference exists. The Executive Officer/Air Pollution Control Officer may then substitute the data from his or her determination for the data submitted.

(b) Interpolation

The rate of emissions of oxides of nitrogen at points in the operating range of a unit or system that is not coincident with data submitted shall be determined by linear interpolation between the two points that bracket the point desired.

(c) Agreement to Combine Systems

Owners or operators of electrical power generating systems may enter into mutual written agreements to combine systems. For the purposes of this Rule, these combined systems shall be considered as one. If systems are combined, the maximum allowable emissions rate table in Part VI of this Rule and which is applicable to said owners or operators shall be superseded and replaced by a new table of like form. The new table shall reflect such agreement and provide for an identical level of system-wide control. Such revised table shall be derived by the Executive Officer/Air Pollution Control Officer.

An agreement to combine systems does not alter the status of demonstration units. Units previously selected as demonstration units shall continue to serve that purpose, and the provisions of VIII shall remain in effect for those units.

(d) Consultation with Other Districts

Prior to making a determination regarding the acceptability of any plans, data, or any other information required by this Rule, the Executive Officer/Air Pollution Control Officer shall consult with the Executive Officer/Air Pollution Control Officer of any other Air Pollution Control District that would be affected by this Rule.

(e) Permit Provisions

Any person operating basic equipment under permit pursuant to this Rule and who plans to make modifications to that equipment or related control equipment for the purpose of reducing oxides of nitrogen emissions as required by this Rule, shall apply for new permits to construct or operate both basic and control equipment involved in such reductions regardless of whether modifications or additions are to be made to either basic or control equipment or both.

Existing permits to operate pertaining to the basic and control equipment as specified above shall be surrendered and cancelled when such new permits to operate are issued. New permits shall not be effective unless surrender of such existing permits is made.

(f) Continuous Monitoring of Ammonia

An owner or operator of an electric power generating unit that uses ammonia to comply with this Rule shall not operate that unit unless the unit is equipped with instruments to continuously monitor and record the concentration of ammonia in the flue gas. Ammonia concentrations shall be monitored when ammonia is being introduced into the flue gas of the unit. The recorded data shall be retained by the owner or operator of the affected electric power generating system for at least two years from the date of recording. These data shall be available for inspection and/or reproduction upon the request of the Executive Officer/ Air Pollution Control Officer.

The Executive Officer/Air Pollution Control Officer shall determine the acceptability of any instrument used to comply with this Section. Such determination shall be made prior to the instrument's installation.

(g) Exemptions

(1) Alternative Energy Projects

(A) Cogeneration and Alternative Fuel Units

The provisions of this Rule do not apply to cogeneration units or units in which refuse-derived fuel or biomass fuel is burned to satisfy at least 50 percent of the total heat demand of that unit. For the purposes of this Rule, a cogeneration unit is one that concurrently recovers for sale by the system's owner or operator a substantial fraction of the input energy as other forms of energy for industrial or commercial heating or cooling purposes. The Executive Officer shall determine what a substantial fraction is, but in no event shall it be less than 25 percent.

For the purposes of this Rule, cogeneration units do not include combined cycle generating units.

(B) Existing Units Modified to Cogeneration Units

Existing units modified to cogeneration units that do not meet the requirements for cogeneration units in VII(g)(1)(A) above on or before August 7, 1978, but are thereafter modified to meet those requirements shall for the purposes of this Rule be considered as new units. These units shall be subject to the new source review provisions of Regulation XIII of the South Coast Air Quality Management District or with Rule 26 of the Ventura County Air Pollution Control District, whichever applies.

(2) Simple Cycle Gas Turbine Units

The provisions of this Rule do not apply to simple cycle gas turbine electric power generating units.

(3) Existing Combined Cycle Units: PARTIAL EXEMPTION

Electric power generating units that are permitted to operate as combined cycle gas turbine units on or before August 7, 1978, are exempt from the provisions of this Rule except for IV(b), "Emissions Dispatch Plan," which applies fully.

(h) Prohibited Modification

An existing unit shall not be modified so as to result in a net increase in its emissions of oxides of nitrogen.

Part VIII. DEMONSTRATION UNIT

This part does not apply to Options 3 and 4.

(a) Demonstration Unit Requirements

A demonstration unit is a unit selected to demonstrate control technology that can be used to achieve Stage II system-wide reductions of 90 percent.

(1) Applicable Unit

A demonstration unit is an electric power generating unit with an electrical generating capacity equal to or greater than:

(A) 100 megawatts or equivalent flue gas volume: Selection 1; or

(B) 350 megawatts or equivalent flue gas volume: Selection 2.

(2) Applicable System

The requirement for a demonstration unit applies only to owners or operators of electric power generating systems with power generating capacities equal to or greater than 500 megawatts.

(3) Number of Required Units

Each system of at least 500 megawatts shall have at least one demonstration unit.

(4) Required Emissions Reductions

The owner or operator of the demonstration unit shall reduce the rate of emissions of oxides of nitrogen by at least 90 percent throughout the demonstration unit's operating range. The rate of reduction shall be determined from the approved unit table for the affected unit. A unit table for a demonstration unit shall meet the minimum requirements stated in the compliance schedule

in VIII(a)(5) below.

(5) Demonstration Unit Compliance Schedule

The emission reductions required by VIII(a)(4) above shall be achieved as expeditiously as practicable but prior to January 1, 1982, for Selection 1 or October 1, 1983, for Selection 2. The owner or operator of a demonstration unit shall fulfill the following minimum requirements:

(A) Prior to May 1, 1980, for both Selection 1 and Selection 2 submit the following to the Executive Officer/Air Pollution Control Officer. Also submit a copy to the Executive Officer of the Air Resources Board:

(i) A final control plan that identifies the unit selected to be the demonstration unit. The final control plan shall describe the minimum steps that will be taken to achieve the required 90 percent reduction by January 1, 1982, for Selection 1 or prior to October 1, 1983, for Selection 2.

The final control plan shall also contain a construction schedule. The construction schedule shall show completion of the construction and equipment installation phases prior to October 1, 1981, for Selection 1 or prior to July 1, 1983, for Selection 2.

(ii) Unit tables as described here. One unit table shall show emissions upstream of control equipment when the unit is burning oil. A second unit table shall show estimated emissions downstream of control equipment when the unit is burning oil. A comparison of the two unit tables shall be made by the Executive Officer/Air Pollution Control Officer to determine if the 90 percent reduction shall be achieved. This second unit table shall also be used when constructing the system-wide composite unit tables required for Stage I compliance pursuant to V(a)(1)(D) and for Stage II compliance pursuant to V(b)(1)(D).

(B) Prior to May 1, 1980. Sign initial contracts for the construction and installation of equipment that will begin to effect the emissions reductions required by this Rule; issue orders for the purchase of component parts to accomplish such reductions. Such contracts and orders shall be submitted to the Executive Officer/ Air Pollution Control Officer. Also, submit copies of such contracts to the Executive Officer of the Air Resources Board.

(C) Prior to October 1, 1981, for Selection 1 or prior to July 1, 1983, for Selection 2. Complete construction and installation of emissions control equipment and component parts as indicated on the construction schedule of the final control plan.

(D) Prior to January 1, 1982, for Selection 1 or prior to October 1, 1983, for Selection 2. Demonstrate compliance by achieving the required 90 percent reduction. Such demonstration shall include the submission of unit tables to the Executive Officer/ Air Pollution Control Officer for his or her approval.

(6) Compliance

(A) Inadequate Final Control Plan is a Violation

An inadequate final control plan is one that will not achieve the 90 percent emissions reduction requirement as expeditiously as practicable. This criterion applies even if the plan ensures compliance by the date specified in the compliance schedule.

If the Executive Officer/Air Pollution Control Officer determines at any time that a final control plan is inadequate according to the criteria above. the owner or operator of the affected electric power generating system shall be in violation of this Rule. Such violation shall commence on the date the determination was made be the Executive Officer/Air Pollution Control Officer. Such violation shall remain in effect until an adequate final control plan has been approved by the Executive Officer/Air Pollution Control Officer.

(B) Noncompliance with Plan is a Violation

Unless otherwise excused by VIII (a)(7) below, any failure to achieve and demonstrate the required 90 percent reduction shall constitute a violation of this Rule.

(7) Excusal from Required Emissions Reduction

Any system owner or operator which is required to achieve such 90 percent reduction shall be excused from this requirement if the Executive Officer/Air Pollution Control Officer makes a final determination that:

(A) The maximum achievable reduction has been demonstrated;

(B) The maximum achievable reduction is less than 90 percent; and

(C) The owner or operator has taken all reasonably available steps to effect such reduction.

Part IX Option 4

This part does not apply to Options 1, 2 and 3.

(a) Emission Reduction Requirements

The owner or operator of a system shall reduce system-wide annual average and daily maximum oxides of nitrogen emissions by 90% and 75%, respectively, from the system-wide average of 1974 through 1978 annual average and maximum daily amounts respectively by January 1990, the final compliance date for this rule. The owner or operator shall also reduce oxides of nitrogen emissions before 1990 by at least the percentages and by the dates shown in Table IX-1 of this section. In addition to meeting the percentage reductions identified in Table IX-1, the owner or operator shall obtain the further emission reductions which will result from compliance with the requirements of paragraph (e) of this Part IX. Except as required by Section (e), variations may be allowed if approved in writing by the Executive Officer/Air Pollution Control Officer and if the Executive Officer/Air Pollution Control Officer determines that subsequent reductions will be achieved in accordance with the schedule in Table IX-1.

Table IX-1
NOx Emission Reduction from
Average of Years 1974 through 1978

Year	Average %Reduction	Daily Maximum % Reduction
1982	18	15
1983	27	22.5
1984	36	30
1985	45	37.5
1986	54	45
1987	63	52.5
1988	72	60
1989	81	67.5
1990	90	75

Compliance with these emission reduction requirements shall be based on annual average and daily maximum total South Coast Air Basin/Ventura County emissions in tons per day, developed using unit NOx concentration measurements and calculated exhaust gas flow levels. These values shall not exceed emission limits established according to the reductions contained in Table IX-1. The utility shall submit on a monthly basis and not later than 30 days following the end of each month daily NOx emissions data for each unit in the South Coast Air Basin/Ventura County for the purpose of determining compliance.

(b) Reduction Methods

Emission reductions shall be accomplished by any method the utility chooses including, but not limited to the following:

(1) Application of new emission controls

(2) Modification or optimization of existing emission controls

(3) Use of cleaner fuels (including natural gas if under firm contract).

(4) Reduction of generation in the South Coast Air Basin/Ventura County by increased generation outside that area. Such electrical energy shall be credited to the extent it reduces emissions within the South Coast Air Basin/Ventura County.

(5) Least NOx dispatch

(c) Exceptions

The owner or operator may, during a system emergency, operates a unit or system in excess of the emissions limits in Section(a) provided that total oxides of nitrogen emissions are otherwise minimized.

The Executive Officer/Air Pollution Control Officer shall be advised of any violation, the reason for it, and expected duration within 24 hours of the occurrence or within four hours after the start of the next normal business day. The utility shall file a written report to the Executive Officer/Air Pollution Control Officer within one week of the occurrence and shall include estimated emissions in excess of this rule. The utility shall make available for inspection by the Executive Officer/ Air Pollution Control Officer such records that establish that there was a system emergency.

For the purpose of this rule, a "system emergency" means a situation when, due to unavailability of scheduled generating capacity or due to unanticipated peak demand, the projected on-line energy producing capacity (including firm purchased power) directly available to the system operator is less than five percent of the anticipated system peak load and appears to be further decreasing to 2-1/2 percent or less.

(d) Compliance Plan

The utility shall submit a compliance plan to the Executive Officer/Air Pollution Control Officer no later than June 1, 1980, for approval and shall submit updated plans annually thereafter. Each plan shall show which methods shall be utilized to reduce South Coast Air Basin/Ventura County emissions to meet the requirements of Section IX(a). The control plan and each annual update shall contain as a minimum:

(1) A resource plan identifying out-of-South-Coast-Air-Basin/Ventura-County generation to be integrated into the utility system and a projection

of the resulting South Coast Air Basin/Ventura County emissions reductions for each of the remaining years to 1990.

(2) A description of the control equipment which will be installed on units and which will be necessary to comply with final emissions reductions requirements of this rule (90 percent annual average and 75 percent peak daily emissions reductions) and the respective units on which such equipment will be installed.

(3) A description of all other steps by which emissions will be reduced to comply with the final emissions reduction requirements of this rule.

(4) A construction schedule and date of operation for all equipment installation necessary to meet the provisions of this part, consistent with Section (e) of this part.

(5) Contingency plans and implementation dates for achieving the required South Coast Air Basin/Ventura County emission reductions in the event the generation identified in the resource plan in #1 above is not obtained in accordance with the plan. Such contingency plans and/or implementation dates may be amended upon filing of an amended contingency plan or schedule and approved by the Executive Officer/Air Pollution Control Officer.

(6) Oil reduction compliance plans filed with Federal and/or State agencies.

(7) The compliance schedule shall contain aggregate emission limits for all units within the District and shall represent an enforceable daily and annual emission limit upon approval of the Compliance Plan.

(8) A methodology for determining compliance with provisions of this rule. Such methodology may be detailed in the form of a Letter of Agreement between the Executive Officer/Air Pollution Control Officer.

(9) A schedule of scheduled shutdowns of units where such shutdowns will have a duration of six weeks or more.

(e) Dates When Controls Must be Installed

(1) The controls identified in the compliance plan required to comply with the final emissions reductions requirement of this part shall be installed as expeditiously as practicable but in no event later than during the first regularly scheduled shutdown of each affected unit which commences after January 1, 1982. For the purpose of this section, a scheduled shutdown shall be of six weeks or more duration and scheduled at least eighteen months in advance of the shutdown. Postponement of a shutdown does not exempt the owner or operator of the system from the requirement to install controls.

(2) In the event that the owner or operator of such utility can demonstrate to the District's Hearing Board that controls on a unit cannot be installed during the first scheduled shutdown because: 1. The control equipment cannot be delivered by the supplier(s) in time for the shutdown; or 2. The amount of time required for the installation of equipment would cause the duration of the shutdown to be extended such that the reliability of the system would be jeopardized, then the Hearing Board may extend the date controls must be installed on that unit by not more than two years. Such a variance shall not affect the requirement to install controls on other units.

(3) If this Section IX(e) is found to be invalid or unenforceable, Option 4 as specified in this Rule shall not be available as a method of compliance with the provisions of this Rule.

(f) Requirement for New Permits

Any person operating basic equipment under permit pursuant to this

Rule and who plans to make modifications to that equipment or related control equipment for the purpose of reducing oxides of nitrogen emission as required by this Rule, shall apply for new permits to construct or operate both basic and control equipment involved in such reductions regardless of whether modifications or additions are to be made to either basic or control equipment or both.

Existing permits to operate pertaining to the basic and control equipment as specified above shall be surrendered and cancelled when such new permits to operate are issued. New permits shall not be effective unless surrender of such existing permits is made.

(g) Right to Petition for Variance

At any time after January 1, 1982, the owner or operator may petition the Air Resources Board to amend the requirements of this rule based upon circumstances which have changed since the date of adoption of this rule, including, but not by any way of limitation, the following:

(1) The cost-effectiveness or technical feasibility of emission control equipment contemplated in any control plan submitted pursuant to this rule.

(2) The effect of power plant NOx emission on federal and state ambient air quality standards and the cost-effectiveness of power plant NOx reductions to achieve or maintain such ambient air quality standards.

(3) Federal or state laws, rules, regulations, or policy affecting the utilization of gas or oil as power plant fuel.

State of California

Memorandum

To : Huey D. Johnson
Secretary
RESOURCES AGENCY

Date : April 14, 1980

Subject: Filing of Notice of Decision of the Air Resources Board

From : Air Resources Board

Pursuant to Title 17, Section 60007(b) and in compliance with Air Resources Board certification under section 21080.5 of the Public Resources Code, the Air Resources Board hereby forwards for posting the attached notice of decision and response to environmental comments raised during the comment period.

Sally Rump
BOARD SECRETARY

Attachments:

[redacted]

Resolution 80-23

State of California
AIR RESOURCES BOARD

Response to Environmental Issues Raised

ITEM: Adoption of Amendments to Rule 475.1 of the South Coast Air Quality Management District and Rule 59.1 of the Ventura County Air Pollution Control District which Control the Emissions of Oxides of Nitrogen from Power Plants

Public Hearing Date: March 27, 1980
Response Date; March 27, 1980
Issuing Authority: Air Resources Board

COMMENT: Efforts to control ozone in the South Coast Air Shed may be adversely impacted by further controls upon emissions of nitrogen oxides and the relative contribution of nitrogen oxides from power plants is extremely small. (The Southern California Edison Company).

RESPONSE: The air quality impacts of controlling emissions of oxides of nitrogen are not a significant environmental issue related to the proposed action. The Board thoroughly examined and considered the air quality need before adopting the existing Rules 495.1 and 59.1 of the South Coast Air Quality Management District and Ventura County, respectively, on August 7, 1978 and May 24, 1979. At those times the Board found that such rules were needed to meet air quality standards and hence would have a positive environmental effect. At this hearing the matter before the Board is the revision to the existing rules to make them more compatible with recent findings on control techniques and to allow for the reduction of fossil fuel burning within the South Coast Air Shed as a way of reducing emissions to comply with the rules. The proposed revisions do not significantly change the air quality impacts of the existing rules. Therefore, the air quality information submitted by Edison

State of California
AIR RESOURCES BOARD

Resolution 80-22

March 27, 1980

WHEREAS, the Air Resources Board (the "Board") on August 7, 1978, in Resolution 78-48 adopted Rule 475.1 for the South Coast Air Quality Management District (the "District"); and

WHEREAS, the Board, in Resolution 79-2, adopted January 23, 1979, in response to a Petition for Reconsideration filed by the District, affirmed its adoption of Rule 475.1 and also remanded the Rule to the District for limited revisions; and

WHEREAS, the District has not acted to revise the Rule but has recommended that the Board itself consider revisions to the Rule; and

WHEREAS, Health and Safety Code Section 39605 authorizes the Board to provide any assistance to any district; and

WHEREAS, the Board is authorized pursuant to Health and Safety Code Section 40451, after holding a public hearing, to revise the rules and regulations of the District to implement and effectuate the purposes of Division 26 of the Health and Safety Code; and

WHEREAS, Sections 110(a)(2) and 172(a)(1) of the Clean Air Act require that a state implementation plan provide for the attainment of national ambient air quality standards in any nonattainment area as expeditiously as practicable; and

WHEREAS, a commitment was made in the South Coast Air Quality Management District's nonattainment plan to reduce emissions of oxides of nitrogen by means of the measures contained in the Rule adopted by this Resolution; and

WHEREAS, the staffs of the District and the Board have worked together to develop amendments that are satisfactory to the staff of the District; and

WHEREAS, the California Environmental Quality Act and ARB regulations require that an activity not be adopted as proposed if significant environmental impacts have been identified and where feasible alternatives and/or mitigation measures exist which would substantially reduce such impacts; and

WHEREAS, the Board has held a public hearing to consider amendments to Rule 475.1 of the South Coast Air Quality Management District; and

RECEIVED
Office of the Secretary
APR 15 1980
Resources Agency of California

I certify that this is a correct copy of the document on file in this office.

Norman E. Hill
Assistant Secretary

State of California

Memorandum

To : Huey D. Johnson
Secretary
RESOURCES AGENCY

Date : April 14, 1980

Subject: Filing of Notice of Decision of the Air Resources Board

From : Air Resources Board

Pursuant to Title 17, Section 60007(b) and in compliance with Air Resources Board certification under section 21080.5 of the Public Resources Code, the Air Resources Board hereby forwards for posting the attached notice of decision and response to environmental comments raised during the comment period.

Sally Rump

Sally Rump
BOARD SECRETARY

Attachments:
Resolution 80-22
Resolution 80-23

RECEIVED
Office of the Secretary
APR 15 1980
Resources Agency of California

I certify that this is a correct copy of the document on file in this office.

Norman E. Hill
Assistant Secretary

AIR RESOURCES BOARD

Response to Environmental Issues Raised

ITEM: Adoption of Amendments to Rule 475.1 of the South Coast Air Quality Management District and Rule 59.1 of the Ventura County Air Pollution Control District which Control the Emissions of Oxides of Nitrogen from Power Plants

Public Hearing Date: March 27, 1980
Response Date: March 27, 1980
Issuing Authority: Air Resources Board

COMMENT: Efforts to control ozone in the South Coast Air Shed may be adversely impacted by further controls upon emissions of nitrogen oxides and the relative contribution of nitrogen oxides from power plants is extremely small. (The Southern California Edison Company).

RESPONSE: The air quality impacts of controlling emissions of oxides of nitrogen are not a significant environmental issue related to the proposed action. The Board thoroughly examined and considered the air quality need before adopting the existing Rules 495.1 and 59.1 of the South Coast Air Quality Management District and Ventura County, respectively, on August 7, 1978 and May 24, 1979. At those times the Board found that such rules were needed to meet air quality standards and hence would have a positive environmental effect. At this hearing the matter before the Board is the revision to the existing rules to make them more compatible with recent findings on control techniques and to allow for the reduction of fossil fuel burning within the South Coast Air Shed as a way of reducing emissions to comply with the rules. The proposed revisions do not significantly change the air quality impacts of the existing rules. Therefore, the air quality information submitted by Edison

RECEIVED
Office of the Secretary
APR 15 1980
Resources Agency of California

I certify that this is a correct copy
of the document on file in this office.
Norman E. Hill Assistant Secretary

State of California
AIR RESOURCES BOARD

Resolution 80-23

March 27, 1980

WHEREAS, the Air Resources Board (the "Board") in Resolution 79-49, May 29, 1979, adopted Rule 59.1 for the Ventura County Air Pollution Control District; and

WHEREAS, Rule 59.1 is complementary to Rule 475.1 of the South Coast Air Quality Management District in that one of the utility companies subject to both rules has power plants in both districts and the emissions from the power plants are controlled systemwide. Therefore both rules must contain substantially identical provisions; and

WHEREAS, the Board in Resolution 80-22, dated March 27, 1980, rescinded Rule 475.1 of the South Coast Air Quality Management District and replaced it with Rule 1135.1, which is in certain respects substantially different from Rule 475.1; and

WHEREAS, Rule 59.1 of the Ventura County Air Pollution Control District must now be changed to contain complementary provisions to those of Rule 1135.1 of the South Coast Air Quality Management District; and

WHEREAS, the Board originally adopted Rule 59.1 in response to a request from the Ventura County Board of Supervisors, and representatives of the County have expressed the desire that the Board at this time consider further revisions to the Rule; and

WHEREAS, Health and Safety Code Section 39605 authorizes the Board to provide any assistance to any district; and

WHEREAS, Sections 110(a)(2) and 172(a)(1) of the Clean Air Act require that a state implementation plan provide for the attainment of national ambient air quality standards in any nonattainment area as expeditiously as practicable; and

WHEREAS, a commitment was made in the Ventura County Air Pollution Control District's nonattainment plan to reduce emissions of oxides of nitrogen by means of the measures contained in the Rule adopted by this Resolution; and

WHEREAS, the staffs of the Ventura County Air Pollution Control District and the Board have worked together to develop amendments that are satisfactory to the staff of the Ventura County Air Pollution Control District; and

WHEREAS, the California Environmental Quality Act and ARB regulations require that an activity not be adopted as proposed if significant environmental impacts have been identified and where feasible alternatives and/or mitigation measures exist which would substantially reduce such impacts; and

WHEREAS, the Board has held a public hearing to consider amendments to Rule 59.1 of the Ventura County Air Pollution Control District; and

WHEREAS, the Board finds that:

1. It is technologically and economically feasible for the utilities subject to the provisions of Rule 59.1 to reduce emissions of oxides of nitrogen to the levels required in the amendments to the Rule adopted by this Resolution; and

2. The specified emissions reductions can be achieved by the dates specified in the amended Rule; and

3. The amended Rule provides flexibility to the utilities in complying with the Rule and meets the concerns raised by the utilities in a reasonable way; and

4. The provisions of the amended Rule are necessary to meet the requirements of the Clean Air Act and to achieve and maintain state ambient air quality standards; and

5. There have been no significant environmental impacts identified which would result from adoption of the proposed action.

NOW, THEREFORE, BE IT RESOLVED, that the Board amends Rule 59.1 of the Ventura County Air Pollution Control District controlling emissions of oxides of nitrogen from power plants as set forth in Attachment A hereto.

BE IT FURTHER RESOLVED, that the Executive Officer is directed to transmit Rule 59.1 adopted by this Resolution to the Environmental Protection Agency for inclusion in the California State Implementation Plan.

I certify that the above is a true and correct copy of Resolution 80-23 as adopted by the Air Resources Board.

Sally Rump
Board Secretary

ATTACHMENT A

Rule 1135.1 of the South Coast Air Quality Management District
Adopted March 27, 1980

and

Rule 59.1 of the Ventura County Air Pollution Control District
Adopted March 27, 1980

for

Controlling Emissions of Oxides of Nitrogen
from Electric Power Generating Equipment

in the

South Coast Air Basin

and the

Ventura County Air Pollution Control District

Note: The differences between Rule 1135.1 and Rule 59.1 are:

1. The term Executive Officer/Air Pollution Control Officer refers to the Executive Officer of the South Coast Air Quality Management District or the Air Pollution Control Officer of the Ventura County Air Pollution Control District, whichever applies.
2. In Part V, "Maximum Allowable Emissions Rate Tables," only the first table for systems of over 5,000 megawatts generating capacity applies in Ventura County Air Pollution Control District.
3. Part VII, "Demonstration Unit," does not apply in the Ventura County Air Pollution Control District.
4. Occasional additional differences are noted in the Rule.
5. Where the term South Coast Air Basin/Ventura County appears, the words, "South Coast Air Basin" apply to Rule 1135.1 and the words Ventura County apply to Rule 59.1.

CONTENTS

Note: This table of contents is solely for the convenience of the reader and is not part of the Rule.

Part		Page
I.	Applicability and Severability	1
	(a) Geographical Limitations	1
	(b) Restricted References	1
	(c) Severability	1
	(d) Compliance With Other Rules and Regulations Not Excluded	1
II.	Definitions	2
III.	Options for Compliance	4
IV.	Control of Individual Units: Unit Tables and Emissions Dispatch	6
	(a) Unit Control: Emissions Allowed by Unit Table	6
	(b) System-Wide Control: Emissions Dispatch Plan	8
V.	Requirements and Compliance Schedules	12
	(a) Stage I Requirements and Compliance Schedule	12
	(b) Stage II Requirements and Compliance Schedule	30
VI.	Maximum Allowable Emissions Rate Tables	50
	(a) Table Criteria	50
	(b) Construction of Additional Tables	51
	(c) Maximum Allowable Emissions Rate Tables	52
VII.	Additional Provisions	55
	(a) Data Requirements	55
	(b) Interpolation	56
	(c) Agreement to Combine Systems	56

Part		Page
VII.	Additional Provisions (Continued)	
	(d) Consultation With Other Districts	57
	(e) Permit Provisions.	57
	(f) Continuous Monitoring of Ammonia	58
	(g) Exemptions	59
	(h) Prohibited Modification	60
VIII.	Demonstration Unit Requirements	61
	(a) Demonstration Unit Requirements	61
IX.	Option 4	66
	(a) Emission Reduction Requirements	66
	(b) Reduction Methods	67
	(c) Exceptions	67
	(d) Compliance Plan	68
	(e) Dates by Which Controls Must be Installed	70
	(f) Requirement for New Permits	70
	(g) Right to Petition For Variance	71

Part		Page
VII.	Additional Provisions (Continued)	
	(d) Consultation With Other Districts	57
	(e) Permit Provisions.	57
	(f) Continuous Monitoring of Ammonia	58
	(g) Exemptions	59
	(h) Prohibited Modification	60
VIII.	Demonstration Unit Requirements	61
	(a) Demonstration Unit Requirements	61
IX.	Option 4	66
	(a) Emission Reduction Requirements	66
	(b) Reduction Methods	67
	(c) Exceptions	67
	(d) Compliance Plan	68
	(e) Dates by Which Controls Must be Installed	70
	(f) Requirement for New Permits	70
	(g) Right to Petition For Variance	71

Part I. APPLICABILITY AND SEVERABILITY

(a) Geographical Limitations

Unless otherwise stipulated in this Rule, the following geographical limitations apply:

(1) Rule 1135.1 applies in the South Coast Air Basin only.

(2) Rule 59.1 applies in the Ventura County Air Pollution Control District only.

(b) Restricted References

Unless otherwise stipulated in this Rule, all references to Parts and Sections of this Rule mean those Parts and Sections of this Rule only.

(c) Severability

Except as otherwise provided in this rule, if any portion of this Rule is found to be unenforceable, such finding shall have no effect on the enforceability of the remaining portions of the Rule. These remaining portions of the Rule shall continue to be in full force and effect.

(d) Compliance With Other Rules and Regulations

Nothing in this Rule shall relieve a person from complying with Regulation XIII of the South Coast Air Quality Management District or with Rule 26 of the Ventura County Air Pollution Control District, whichever applies.

Part II. DEFINITIONS

Electric Power Generating System means one or more electric power generating units which have a common owner or operator, and which are located in the South Coast Air Basin and/or Ventura County Air Pollution Control District.

Existing System or Unit means any electric power generating system or unit, construction of which commenced prior to August 7, 1978.

Minimum Load means the minimum rate of electric power generation below which a system or unit cannot be continuously and safely operated. Minimum load shall be expressed in net megawatts.

Modified System or Unit means any existing electric power generating system or unit on which a modification is commenced on or after August 7, 1978. However, systems or units on which a modification is commenced for the purpose of complying with this Rule shall not be considered modified systems or units.

New System or Unit means any electric power generating system or unit, the construction of which is commenced on or after August 7, 1978.

Operating Range means all possible rates of electric power generation between the minimum load and the rated maximum load of any electric power generating system or unit. Operating range shall be expressed in net megawatts.

Part II. DEFINITIONS

Electric Power Generating System means one or more electric power generating units which have a common owner or operator, and which are located in the South Coast Air Basin and/or Ventura County Air Pollution Control District.

Existing System or Unit means any electric power generating system or unit, construction of which commenced prior to August 7, 1978.

Minimum Load means the minimum rate of electric power generation below which a system or unit cannot be continuously and safely operated. Minimum load shall be expressed in net megawatts.

Modified System or Unit means any existing electric power generating system or unit on which a modification is commenced on or after August 7, 1978. However, systems or units on which a modification is commenced for the purpose of complying with this Rule shall not be considered modified systems or units.

New System or Unit means any electric power generating system or unit, the construction of which is commenced on or after August 7, 1978.

Operating Range means all possible rates of electric power generation between the minimum load and the rated maximum load of any electric power generating system or unit. Operating range shall be expressed in net megawatts.

Oxides of Nitrogen Emissions Dispatch means the allocation of electric power demand to the various electric power generating units in any electric power generating system according to a method that will minimize the rate of emissions of oxides of nitrogen from the system.

Rated Maximum Load means the maximum continuous safe electric power generating capacity of a system or unit. Rated maximum load shall be expressed in net megawatts.

Rate of Emissions of Oxides of Nitrogen means the mass of oxides of nitrogen emitted in pounds per hour. In calculating this rate, the mass of oxides of nitrogen shall be expressed as an equivalent mass of nitrogen dioxide and shall be measured in a manner approved by the Executive Officer/Air Pollution Control Officer.

System means one or more electric power generating units that have a common owner or operator.

System-wide Composite Unit Table means a tabular presentation of the rate of emissions of oxides of nitrogen throughout the operating range of an electric power generating system. Criteria for preparing system-wide tables are contained in VI(a) and (b).

Unit means the minimum number of fossil fuel fired combustion devices or equipment necessary to produce electrical energy for sale or exchange.

Unit Table means a tabular presentation of the rate of emissions of oxides of nitrogen at each of 10 equally spaced points throughout the operating range of an electric power generating unit.

III. Options for Compliance

An owner or operator of a system must comply with one of the four options in this rule. A short summary of the four options is shown in Table III-1.

(a) Option Selection Requirements

(1) The owner or operator of an electric power generating system shall select either Option 1 or Option 2 or Option 3 or Option 4. Once an option is approved by the Executive Officer/Air Pollution Control Officer, that selection is final unless a change would not result in a delay in the installation of control equipment and the change is approved by the Executive Officer/Air Pollution Control Officer.

(2) Selection Notification Date

The owner or operator shall notify the Executive Officer/Air Pollution Control Officer of the option selected. Such selection must be made in writing on or before June 1, 1980.

Unit Table means a tabular presentation of the rate of emissions of oxides of nitrogen at each of 10 equally spaced points throughout the operating range of an electric power generating unit.

III. Options for Compliance

An owner or operator of a system must comply with one of the four options in this rule. A short summary of the four options is shown in Table III-1.

(a) Option Selection Requirements

(1) The owner or operator of an electric power generating system shall select either Option 1 or Option 2 or Option 3 or Option 4. Once an option is approved by the Executive Officer/Air Pollution Control Officer, that selection is final unless a change would not result in a delay in the installation of control equipment and the change is approved by the Executive Officer/Air Pollution Control Officer.

(2) Selection Notification Date

The owner or operator shall notify the Executive Officer/Air Pollution Control Officer of the option selected. Such selection must be made in writing on or before June 1, 1980.

Table III-1

Requirement	Option 1	Option 2	Option 3	Option 4
Number of Stages	2	2	1	1
Final Compliance Dates	Stage I - 12/31/83 Stage II - 1/1/90	Stage I - 12/31/83 Stage II - 1/1/88	1/1/90	1/1/90
Reduction Required	Stage I nearly 50% Stage II - 90%	Stage I - much less than 50% Stage II - 90%	90%	Annual average-90%; Annual peak day - 75%
Basis for Reduction	Reduction at all system loads	Reduction at all system loads	Reduction at all system loads	Reduction in total emissions & peak emissions
Credit for Reduced fossil fuel burning below 74-78 levels	Relax controls so emissions are same as without new energy	Relax controls so emissions are the same as without new energy	Relax controls so emissions are the same as without new energy	Pound for pound
Date of installation of controls for final compliance of 90% reduction	In time for final compliance in 1990	First scheduled outage of unit after 1983	First scheduled outage of unit after January 1, 1982	First scheduled outage of unit after January 1, 1982
Applicable parts of rule	I,II, III, IV, V, VI, VII, & VIII	I, II, III, IV, V, VI, VII, & VIII	I, II, III, IV, V(b), VI, & VII	I, II, III, & IX

Part IV. Control of Individual Units: Unit Tables and Emissions Dispatch

This part does not apply to Option 4.

(a) Unit Control: Emissions Allowed by Unit Table

A unit table is a tabular presentation of the rate of emissions of oxides of nitrogen at each of 10 or more equally spaced load points throughout the operating range of an electric power generating unit. The rate shall be shown in pounds of oxides of nitrogen per net megawatt hour.

(1) Compliance With Unit Table

An owner or operator of an electric power generating system shall not operate an electric power generating unit if at any point in the unit's operating load range the unit emits oxides of nitrogen at a rate greater than the rate allowed by the approved unit table.

(2) Required Tables; Required Approval

Prior to the operation of any new system or new or modified unit, the owner or operator of said system or unit shall submit to the Executive Officer/Air Pollution Control Officer, for consideration for his or her approval, additional or replacement tables for the affected units.

Part IV. Control of Individual Units: Unit Tables and Emissions Dispatch

This part does not apply to Option 4.

(a) Unit Control: Emissions Allowed by Unit Table

A unit table is a tabular presentation of the rate of emissions of oxides of nitrogen at each of 10 or more equally spaced load points throughout the operating range of an electric power generating unit. The rate shall be shown in pounds of oxides of nitrogen per net megawatt hour.

(1) Compliance With Unit Table

An owner or operator of an electric power generating system shall not operate an electric power generating unit if at any point in the unit's operating load range the unit emits oxides of nitrogen at a rate greater than the rate allowed by the approved unit table.

(2) Required Tables; Required Approval

Prior to the operation of any new system or new or modified unit, the owner or operator of said system or unit shall submit to the Executive Officer/Air Pollution Control Officer, for consideration for his or her approval, additional or replacement tables for the affected units.

The owner or operator shall prepare unit tables in accordance with this Section, and as applicable:

(A) Stage I compliance requirements: V(a)(7)(I)

(B) Stage II compliance requirements: V(b)(7)(I)

(C) Demonstration unit compliance schedule: VIII(a)(5)(A)(ii)

(3) Noncompliance is a Violation

Operation of a unit in a manner that causes oxides of nitrogen to be emitted at a rate greater than allowed by the approved unit table is a violation of this Rule. Operation in this manner is a violation regardless of the operation of or emissions from any other unit in the system. Such violation exists regardless of the operation of or emissions from the same unit at any other load.

(4) Determining Rates of Emissions

To determine the rate of emissions of oxides of nitrogen from a unit, the Executive Officer/Air Pollution Control Officer may employ data obtained by in-stack monitors, continuous source testing equipment, or any other tests or equipment that the Executive Officer/Air Pollution Control Officer

determines are acceptable. The Executive Officer/ Air Pollution Control Officer shall consider the accuracy of such equipment and the manner of testing when making this determination.

(b) System-wide Control: Emissions Dispatch Plan

An oxides of nitrogen emissions dispatch plan shall be prepared for each system by the owner or operator of that system.

(1) Minimum Contents of Emissions Dispatch Plan

(A) A detailed methodology for oxides of nitrogen emissions dispatch for each unit in the system unless exempted by this Rule. The methodology shall provide adequate detail for a determination at any time by the Executive Officer/Air Pollution Control Officer of whether or not the system is being operated in accordance with the dispatch plan consistent with the units available at that time. The availability of units shall be determined by the owner or operator.

Such methodology shall also include a unit table for each unit. The unit table shall show actual measured emissions for a unit from which the

determines are acceptable. The Executive Officer/ Air Pollution Control Officer shall consider the accuracy of such equipment and the manner of testing when making this determination.

(b) System-wide Control: Emissions Dispatch Plan

An oxides of nitrogen emissions dispatch plan shall be prepared for each system by the owner or operator of that system.

(1) Minimum Contents of Emissions Dispatch Plan

(A) A detailed methodology for oxides of nitrogen emissions dispatch for each unit in the system unless exempted by this Rule. The methodology shall provide adequate detail for a determination at any time by the Executive Officer/Air Pollution Control Officer of whether or not the system is being operated in accordance with the dispatch plan consistent with the units available at that time. The availability of units shall be determined by the owner or operator.

Such methodology shall also include a unit table for each unit. The unit table shall show actual measured emissions for a unit from which the

emissions have been measured or estimated emissions for a unit from which the emissions have not been measured.

Only the most current, approved emissions data shall be used.

(B) An assurance that available units in the system are dispatched and operated in a manner that minimizes the rate of emissions of oxides of nitrogen from the system.

(2) Plan Submittal and Operating Requirements

(A) Executive Officer Approval

Each emissions dispatch plan shall be submitted to the Executive Officer/Air Pollution Control Officer for consideration for approval.

(B) Initial Plan Submittal; Date of Submittal

An initial emissions dispatch plan shall be submitted to the Executive Officer/Air Pollution Control Officer prior to June 1, 1980.

(C) Revised Plan Submittal

A revised emissions dispatch plan shall be submitted to the Executive Officer/Air Pollution Control Officer within 30 days after a new or modified unit is added to the system.

(D) Operational Date of Plan

Effective 30 days after plan submittal, the electric power generating system shall be operated according to the submitted plan. Effective 30 days after approval by the Executive Officer/Air Pollution Control Officer, the system shall be operated according to the approved plan.

(3) Noncompliance with Approved Plan is a Violation.

Operation of an electric power generating system that is determined by the Executive Officer/Air Pollution Control Officer to be not in accordance with the approved emissions dispatch is a violation of this Rule.

(4) Requirements for Daily Records

The owner or operator of a system shall maintain daily records of the manner in which the system is operated. These daily records are to be maintained for the purpose of determining compliance with the approved emissions dispatch plan. The type of information to be recorded and the form in which it is to be recorded shall be specified by the Executive Officer/ Air Pollution Control Officer. Such records shall be

(D) Operational Date of Plan

Effective 30 days after plan submittal, the electric power generating system shall be operated according to the submitted plan. Effective 30 days after approval by the Executive Officer/Air Pollution Control Officer, the system shall be operated according to the approved plan.

(3) Noncompliance with Approved Plan is a Violation.

Operation of an electric power generating system that is determined by the Executive Officer/Air Pollution Control Officer to be not in accordance with the approved emissions dispatch is a violation of this Rule.

(4) Requirements for Daily Records

The owner or operator of a system shall maintain daily records of the manner in which the system is operated. These daily records are to be maintained for the purpose of determining compliance with the approved emissions dispatch plan. The type of information to be recorded and the form in which it is to be recorded shall be specified by the Executive Officer/Air Pollution Control Officer. Such records shall be

maintained for at least two years from the date of recording. Such records shall be available for inspection and/or reproduction upon the request of the Executive Officer/Air Pollution Control Officer or his or her authorized representative.

(5) Units Exempt From Emissions Dispatch Plan

Simple cycle gas turbines are exempt from the emissions dispatch plan; see VII(g)(2).

Alternative energy projects as defined in VII(g)(1) are exempt from the emissions dispatch plan.

V. Requirements and Compliance Schedules

This part does not apply to Option 4

(a) Stage I Requirements and Compliance Schedule

This section V(a) does not apply to Option 3.

The owner or operator of an existing electric power generating system shall comply with the following requirements for Stage I:

(1) Stage I Emissions Reductions

Emissions of oxides of nitrogen shall be reduced to no more than the emissions allowed by the Stage I rates in Part VI. This reduction shall be accomplished as expeditiously as practicable but not later than December 31, 1983.

For Option 1 and Option 2, the following requirements shall be fulfilled:

(A) Prior to June 1, 1980, Submit a final control plan to the executive Officer/Air Pollution Control Officer for his or her approval. Also submit a copy of this final control plan to the Executive Officer of the Air Resources Board. The final control plan shall include as a minimum:

(i) A description of compliance steps. This description shall include a list of the steps that will be

V. Requirements and Compliance Schedules

This part does not apply to Option 4

(a) Stage I Requirements and Compliance Schedule

This section V(a) does not apply to Option 3.

The owner or operator of an existing electric power generating system shall comply with the following requirements for Stage I:

(1) Stage I Emissions Reductions

Emissions of oxides of nitrogen shall be reduced to no more than the emissions allowed by the Stage I rates in Part VI. This reduction shall be accomplished as expeditiously as practicable but not later than December 31, 1983.

For Option 1 and Option 2, the following requirements shall be fulfilled:

(A) Prior to June 1, 1980. Submit a final control plan to the executive Officer/Air Pollution Control Officer for his or her approval. Also submit a copy of this final control plan to the Executive Officer of the Air Resources Board. The final control plan shall include as a minimum:

(i) A description of compliance steps. This description shall include a list of the steps that will be

taken at each electric power generating unit to comply with the Stage I compliance schedule. The description must contain a construction schedule. The construction schedule must show that the construction and equipment installation phases of the final control plan will be completed prior to September 1, 1983. The description of compliance steps must also show that the Stage I maximum emission rates allowed by Part VI will be achieved by December 31, 1983.

(ii) Unit tables. A unit table shall be submitted for each unit in the system. Each unit table shall show the estimated emissions when the controls required for Stage I compliance are applied and the unit is burning oil.

Each unit table shall show the rate of emissions of oxides of nitrogen at each of 10 equally spaced load points from minimum load to rated maximum load. The rate shall be shown in pounds of oxides of nitrogen per net megawatt hour. The rate shown must be the rate to which the unit shall be controlled to achieve compliance with

the Stage I maximum emissions rates in Part VI for Option 1 or Option 2.

(B) Prior to July 1, 1980. Sign initial contracts for the construction and installation of equipment that will lead to the achievement of the Stage I maximum emission rates as required by Part VI of this Rule; issue orders for the purchase of component parts necessary to accomplish such reductions.

(C) Prior to September 1, 1983. Complete construction and installation of emissions control equipment and component parts as indicated on the construction schedule for the final control plan.

(D) Prior to December 31, 1983. Demonstrate compliance by achieving the Stage I maximum emission rates of Part VI of this Rule. Such demonstration shall also include the submission to the Executive Officer/Air Pollution Control Officer for his or her approval a unit table for each unit. Measured emissions at each unit shall not exceed the emissions at any point or increment on the unit table. In addition, a

the Stage I maximum emissions rates in Part VI for Option 1 or Option 2.

(B) Prior to July 1, 1980. Sign initial contracts for the construction and installation of equipment that will lead to the achievement of the Stage I maximum emission rates as required by Part VI of this Rule; issue orders for the purchase of component parts necessary to accomplish such reductions.

(C) Prior to September 1, 1983. Complete construction and installation of emissions control equipment and component parts as indicated on the construction schedule for the final control plan.

(D) Prior to December 31, 1983. Demonstrate compliance by achieving the Stage I maximum emission rates of Part VI of this Rule. Such demonstration shall also include the submission to the Executive Officer/Air Pollution Control Officer for his or her approval a unit table for each unit. Measured emissions at each unit shall not exceed the emissions at any point or increment on the unit table. In addition, a

system-wide composite unit table shall show that emissions from the system shall not exceed the Stage I maximum emission rates of Part VI of this Rule. This system-wide composite unit table shall be constructed in accordance with the criteria set forth in VI(a).

(2) Requirements for an Approvable Final Control Plan

An approvable final control plan shall:

(A) Result in compliance with Stage I emissions reduction requirements as expeditiously as practicable;

(B) Satisfy the minimum requirements for a description of compliance steps pursuant to V(a)(1)(A)(i); satisfy the minimum requirements for unit tables pursuant to V(a)(1)(A)(ii); and

(C) With reasonable certainty prevent localized violations of ambient air quality standards.

(D) Show the schedule of conservation efforts, construction or procurement of each new source or conservation of electrical energy which will result in a system-wide reduction of emissions of oxides of nitrogen emitted

in the South Coast Air Basin/Ventura County below average 1974 through 1978 annual average emissions, pursuant to §'s V(a)(6) & V(a)(7). The schedule of construction or procurement shall show:

(i) the date of approval of officers of the utility to proceed with the construction or procurement;

(ii) the date by which contracts shall be signed for new electrical energy for which construction is not required;

(iii) the latest dates for the following construction steps:

- Approval of contracts for construction
- Commencement of construction
- Completed installation of major equipment items such as turbines or boilers
- Generation of electrical energy needed to accomplish the emission reduction claimed in subsection V(a)(2)(E).

(E) For each of the years covered by the final control plan state the annual system-wide reduction in nitrogen oxide emissions which shall be achieved as a result of each new source of energy or conservation for the South Coast Air Basin/Ventura County.

in the South Coast Air Basin/Ventura County below average 1974 through 1978 annual average emissions, pursuant to §'s V(a)(6) & V(a)(7). The schedule of construction or procurement shall show:

(i) the date of approval of officers of the utility to proceed with the construction or procurement;

(ii) the date by which contracts shall be signed for new electrical energy for which construction is not required;

(iii) the latest dates for the following construction steps:

- Approval of contracts for construction
- Commencement of construction
- Completed installation of major equipment items such as turbines or boilers
- Generation of electrical energy needed to accomplish the emission reduction claimed in subsection V(a)(2)(E).

(E) For each of the years covered by the final control plan state the annual system-wide reduction in nitrogen oxide emissions which shall be achieved as a result of each new source of energy or conservation for the South Coast Air Basin/Ventura County.

(F) State the maximum amount of emissions of oxides of nitrogen which shall be emitted from the utility's system on any calendar day for each of the years to the final date of the plan. Emissions greater than the amount approved constitute a violation of this rule.

(G) State the maximum amount of electrical energy which shall be generated by the utility's combustion units in the South Coast Air Basin/Ventura County in each of the years covered by the plan.

(H) Describe the equipment which shall be installed and operated on the utility's existing units to reduce emissions by the amount claimed for new electrical energy or conservation in the event that such new energy or conservation or alternative new energy or conservation will not be obtained by the date specified in the schedule required by §V(a)(2)(D). Also show the latest date by which such equipment shall be installed and operated.

(3) Unapprovable Final Control Plan is a Violation

Submission of a final control plan that does not meet the criteria specified in IV(b)(2) above is a violation of this

Rule. Such violation shall commence on June 1, 1980. Such violation shall remain in effect until an acceptable final control plan has been approved by the Executive Officer/Air Pollution Control Officer.

(4) Reduced Emissions Reduction Requirements for Stage I Compliance

The emission reduction requirements for Stage I compliance may be reduced for a unit(s) provided all of the following are fulfilled:

(A) The final control plan meets the requirements of V(a)(1)(A) and V(a)(2);

(B) All of the emissions reduction equipment installed to comply with Stage I maximum allowable emissions rates of Part VI is operated at its full emissions reductions potential;

(C) Additional emissions reduction methods have been applied to all units if such methods are:

(i) Capable of being installed within the time left for Stage I compliance, that is, by December 31, 1983; and

Rule. Such violation shall commence on June 1, 1980. Such violation shall remain in effect until an acceptable final control plan has been approved by the Executive Officer/Air Pollution Control Officer.

(4) Reduced Emissions Reduction Requirements for Stage I Compliance

The emission reduction requirements for Stage I compliance may be reduced for a unit(s) provided all of the following are fulfilled:

(A) The final control plan meets the requirements of V(a)(1)(A) and V(a)(2);

(B) All of the emissions reduction equipment installed to comply with Stage I maximum allowable emissions rates of Part VI is operated at its full emissions reductions potential;

(C) Additional emissions reduction methods have been applied to all units if such methods are:

(i) Capable of being installed within the time left for Stage I compliance, that is, by December 31, 1983; and

(ii) More cost-effective than the least cost-effective control that has been installed to comply with Stage I other than the use of equipment to inject ammonia in the presence of a catalyst (selective catalytic reduction). Cost-effectiveness shall be computed in terms of 1979 dollars per pound of oxides of nitrogen removed.

(D) The Executive Officer/Air Pollution Control Officer has published for at least 30 days a notice asking for public comment on the proposal to excuse the owner or operator from compliance with unit tables for the affected units;

(E) The Executive Officer/Air Pollution Control Officer determines after a review of all comments and all evidence that compliance with the subject unit table(s) is not reasonably achieveable. This review shall include an evaluation of emission control techniques used elsewhere in this country and in other countries;

(F) The Executive Officer of the Air Resources Board

concurs with the determination made by the Executive Officer/Air Pollution Control Officer;

(G) When the Stage I emission reduction requirements for a unit have been reduced under the provisions of V(a)(4)(A) through V(a)(4)(F) above, the Stage II compliance requirements for the affected unit are altered as follows:

(i) On the first scheduled shutdown after January 1, 1984, control equipment for meeting Stage II maximum emissions rates of Part VI shall be installed on that unit;

(ii) Within 90 days of being excused under the provisions of V(a)(4)(A) through V(a)(4)(F), the system owner or operator shall submit a plan to the Executive Officer/Air Pollution Control Officer. The plan shall show the steps to be taken to install the control equipment necessary to meet Stage II emission rates for the affected unit; and

(iii) Within 90 days of completion of equipment installation to meet Stage II emissions rates, the system owner or operator shall demonstrate compliance with the maximum emissions rates of Stage II for the affected unit.

concurs with the determination made by the Executive Officer/Air Pollution Control Officer;

(G) When the Stage I emission reduction requirements for a unit have been reduced under the provisions of V(a)(4)(A) through V(a)(4)(F) above, the Stage II compliance requirements for the affected unit are altered as follows:

(i) On the first scheduled shutdown after January 1, 1984, control equipment for meeting Stage II maximum emissions rates of Part VI shall be installed on that unit;

(ii) Within 90 days of being excused under the provisions of V(a)(4)(A) through V(a)(4)(F), the system owner or operator shall submit a plan to the Executive Officer/Air Pollution Control Officer. The plan shall show the steps to be taken to install the control equipment necessary to meet Stage II emission rates for the affected unit; and

(iii) Within 90 days of completion of equipment installation to meet Stage II emissions rates, the system owner or operator shall demonstrate compliance with the maximum emissions rates of Stage II for the affected unit.

(5) Units Exempted from Stage I Compliance

Existing combined cycle generating units are exempt from Stage I requirements.

Alternative energy projects as defined in VII(g)(1) are exempt from Stage I requirements.

(6) Additional Replacement of In-Basin Generated Electrical Energy by New Electrical Energy or Conservation is an Acceptable Method of Reducing Emissions

Reduction of South Coast Air Basin/Ventura County emissions by the replacement of in-basin generated electrical energy by new electrical energy or conservation is an acceptable method of achieving emission reductions in the final control plan provided that the electric utility owner or operator demonstrates to the satisfaction of the Executive Officer/Air Pollution Control Officer that:

(A) The owner or operator has a legally enforceable entitlement to such replacement power which lasts for the period during which the reduction in emissions is claimed;

(B) Legally enforceable commitments are made in the final control plan to install and operate control equipment on in-basin unit(s) or obtain equivalent alternative energy to reduce emissions by the amount claimed for replacement power in the event that such replacement power is not obtained by the date specified in the final control plan for achieving such claimed emissions reductions; and

(C) Emissions are reduced by the amounts claimed in the final control plan and in accordance with the schedule in that plan.

(D) The utility will implement programs which will reduce consumption of electrical energy by the amount claimed.

Prior to approval of a final control plan the Executive Officer/Air Pollution Control Officer may require the surrender for modification of permits to construct and/or operate pursuant to subsection VII(e).

(B) Legally enforceable commitments are made in the final control plan to install and operate control equipment on in-basin unit(s) or obtain equivalent alternative energy to reduce emissions by the amount claimed for replacement power in the event that such replacement power is not obtained by the date specified in the final control plan for achieving such claimed emissions reductions; and

(C) Emissions are reduced by the amounts claimed in the final control plan and in accordance with the schedule in that plan.

(D) The utility will implement programs which will reduce consumption of electrical energy by the amount claimed.

Prior to approval of a final control plan the Executive Officer/Air Pollution Control Officer may require the surrender for modification of permits to construct and/or operate pursuant to subsection VII(e).

(7) Methodology for Claiming Credit for Conservation Efforts or New Electrical Energy

The owner or operator who claims emission reductions for conservation efforts or new energy shall compute such reductions according to the method given here. The method is described in text form, and an illustration is provided. The sample is calculated for one load increment for one unit. If credit for conservation efforts or new energy is to be claimed, these calculations shall be performed for each load increment for each unit.

The Following Steps Assume No Replacement Power is Available

A. Determine the hourly emissions in pounds with controls applied to each of the 10 load increments for the unit. This value is derived from the unit table used for compliance with the maximum allowable emissions rate tables in Part VI of the Rule assuming no replacement power is available. Enter this number in the appropriate block in Row A. In the sample problem, the figure is 100 pounds/hour at load increment 7.

Example of Calculations for Replacement Electrical Energy

Unit xyz

Assume No Replacement Power Available

		LOAD INCREMENT										Sum of annual emissions for unit 3/
		1	2	3	4	5	6	7	8	9	10	
A 1/	Hourly emissions (pounds) with controls applied assuming no replacement power							100				
B	Average annual hours of operation in 1974 through 1978*							500				
C	Average annual emissions without replacement power (A times B)							50,000				D 3/
E	Average annual emissions from the system = sum of unit annual emissions (D) for all units											

Assume Replacement Power Available

F 2/	Hourly emissions (pounds) with relaxed controls assuming replacement power							150				
G	Annual hours of operation in 1984 with replacement power							200				
H	Annual emissions with replacement power (F times G)							30,000				I 3/
J	Average annual emissions from the system = sum of unit annual emissions (I) for all units											

1/ Row A from unit tables used for compliance with Part V of the rule.
2/ Row F is from unit tables with less stringent controls applied than in Row A.
3/ Annual emissions from a unit equals the sum of annual emissions at each of the 10 load increments.

* See Paragraph V(a)(7)(B)

Example of Calculations for Replacement Electrical Energy

Unit xyz

Assume No Replacement Power Available

		LOAD INCREMENT										Sum of annual emissions for unit 3/
		1	2	3	4	5	6	7	8	9	10	
A 1/	Hourly emissions (pounds) with controls applied assuming no replacement power							100				
B	Average annual hours of operation in 1974 through 1978*							500				
C	Average annual emissions without replacement power (A times B)							50,000				D 3/
E	Average annual emissions from the system = sum of unit annual emissions (D) for all units											

Assume Replacement Power Available

F 2/	Hourly emissions (pounds) with relaxed controls assuming replacement power							150				
G	Annual hours of operation in 1984 with replacement power							200				
H	Annual emissions with replacement power (F times G)							30,000				I 3/
J	Average annual emissions from the system = sum of unit annual emissions (I) for all units											

1/ Row A from unit tables used for compliance with Part V of the rule.
2/ Row F is from unit tables with less stringent controls applied than in Row A.
3/ Annual emissions from a unit equals the sum of annual emissions at each of the 10 load increments.

* See Paragraph V(a)(7)(B)

B. Estimate the average annual hours of operation at each of the 10 load increment in base years 1974 through 1978 by a method acceptable to the Executive Officer/Air Pollution Control Officer. Estimates must agree with actual capacity factors for units. Enter this estimate in the appropriate block in Row B. In this sample, the hours at load increment 7 are 500 hours. The number of hours shall be consistent with capacity factors in the Common Forecasting Methodology III approved by the Energy Commission.

C. Determine the average annual emissions for each of the 10 load increments if no replacement power is supplied. To do this, multiply the appropriate entries in Row A by the appropriate entries in Row B. In this sample,

100 lbs/hr times 500 hrs/yr = 50,000 lbs/yr
at load increment 7

D. Determine the average annual emissions for the unit. This is done by adding the average annual emissions at each of the 10 load increments calculated in Step C.

E. Determine the systems total average annual emissions if no replacement power is available and adequate controls are applied to each unit to comply with the maximum allowable emissions rate table in Part VI of the Rule. To do this, add the average annual emissions from each unit in the system as calculated in Step D.

The Following Steps Assume Replacement Power is Available

F. Determine the hourly emissions in pounds with relaxed controls applied to each of the 10 load increments for the unit. This value is derived from relaxing controls that are assumed for the unit in Step A. Enter this number in the appropriate block on Row F. In the sample problem, the emissions for the less stringently controlled unit at load increment 7 is now 150 pounds/hr.

E. Determine the systems total average annual emissions if no replacement power is available and adequate controls are applied to each unit to comply with the maximum allowable emissions rate table in Part VI of the Rule. To do this, add the average annual emissions from each unit in the system as calculated in Step D.

The Following Steps Assume Replacement Power is Available

F. Determine the hourly emissions in pounds with relaxed controls applied to each of the 10 load increments for the unit. This value is derived from relaxing controls that are assumed for the unit in Step A. Enter this number in the appropriate block on Row F. In the sample problem, the emissions for the less stringently controlled unit at load increment 7 is now 150 pounds/hr.

G. Determine the average annual hours of operation at each of the 10 load increments in 1984 assuming replacement power is available. Enter this estimate in the appropriate block in Row G. In this sample, the hours at load increment 7 with replacement power available is 200 hours.

H. Determine the average annual emissions for each of the 10 load increments if replacement power is supplied and controls are relaxed. To do this, multiply the appropriate entries in Row F by the appropriate entries in Row G. In this sample,

150 lbs/hr times 200 hrs = 30,000 lbs/yr at load increment 7

I. Determine the average annual emissions for the unit with relaxed controls and new hours of operation by adding the average annual emissions at each of the 10 load increments calculated in Step H.

J. Determine the system's total annual emissions if replacement power is available and controls are relaxed on some units. To do this, add the annual emissions from each unit as calculated in Step I.

(8) Violation of Control Plan is a Violation of Rule

A violation of an approval final control plan is a violation of this rule. Where the Executive Officer/Air Pollution Control Officer determines that a violation of the schedules of equipment installation or procurement of new power shown in the Final Control Plan has occurred, as a result of circumstances beyond the control of the affected utility, a "Notice to Comply" shall first be issued to the violating utility before the issuance of any "Notice of Violation." Failure to correct the violation within sixty days from the date of issuance of "Notice to Comply" shall be followed by a "Notice of Violation" of the rule and enforcement action.

(b) Stage II Requirements and Compliance Schedule

The owner or operator of an existing electric power generating system shall comply with the following requirements for Stage II.

(1) Stage II Emissions Reductions

Emissions of oxides of nitrogen shall be reduced to no more than the emissions allowed by the Stage II rates in Part VI. This reduction shall be accompanied as expeditiously as practicable but not later than January 1, 1990 for Options 1 and 3 and January 1, 1988 for Option 2.

For Options 1, 2, and 3 the following requirements shall be fulfilled:

(A) (i) Prior to July 1, 1984, for Option 1 or July 1, 1981, for Option 2 or January 1, 1981 for Option 3. Submit a final control plan to the Executive Officer/Air Pollution Control Officer for his or her approval. Also submit a copy of this final control plan to the Executive Officer of the Air Resources Board.

(b) Stage II Requirements and Compliance Schedule

The owner or operator of an existing electric power generating system shall comply with the following requirements for Stage II.

(1) Stage II Emissions Reductions

Emissions of oxides of nitrogen shall be reduced to no more than the emissions allowed by the Stage II rates in Part VI. This reduction shall be accompanied as expeditiously as practicable but not later than January 1, 1990 for Options 1 and 3 and January 1, 1988 for Option 2.

For Options 1, 2, and 3 the following requirements shall be fulfilled:

(A) (i) Prior to July 1, 1984, for Option 1 or July 1, 1981, for Option 2 or January 1, 1981 for Option 3. Submit a final control plan to the Executive Officer/Air Pollution Control Officer for his or her approval. Also submit a copy of this final control plan to the Executive Officer of the Air Resources Board.

(ii) For Option 2, the final control plan shall show the completion of all the work that cannot be done while the unit is operating but that is necessary for the proper operation of control equipment. This work shall be done during the first scheduled shutdown of the unit after January 1, 1984.

(iii) For Option 3, the final control plan shall show the completion of all the work that cannot be done while the unit is operating but that is necessary for the proper operation of control equipment. This work shall be done during the first scheduled shutdown of the unit after January 1, 1982. For the purpose of this section, a scheduled shutdown shall be a scheduled major maintenance shutdown which the utility uses for the purpose of preventative maintenance and which is scheduled at least eighteen months prior to the shutdown. Postponement of a shutdown does not exempt the owner or operator of a system from the requirement to install controls.

In the event that the owner or operator of such utility can demonstrate to the District's Hearing Board that controls on a unit cannot be installed during the first scheduled shutdown because: 1, The control equipment cannot be acquired from supplier(s) in time for the shutdown, or 2, The amount of time required for the installation of equipment would cause the duration of the shutdown to be extended such that the reliability of the system would be jeopardized, then the Hearing Board may extend the date by which controls must be installed on that unit by not more than two years. Such a variance shall not affect the requirement to install control equipment on other units. If the provisions of this paragraph relating to Option 3 are found to be invalid or unenforceable, Option 3 as specified in this Rule shall not be available as a method of compliance with the provisions of this Rule.

Additional Minimum Requirements for a Final Control Plan for Stage II include:

In the event that the owner or operator of such utility can demonstrate to the District's Hearing Board that controls on a unit cannot be installed during the first scheduled shutdown because: 1, The control equipment cannot be acquired from supplier(s) in time for the shutdown, or 2, The amount of time required for the installation of equipment would cause the duration of the shutdown to be extended such that the reliability of the system would be jeopardized, then the Hearing Board may extend the date by which controls must be installed on that unit by not more than two years. Such a variance shall not affect the requirement to install control equipment on other units. If the provisions of this paragraph relating to Option 3 are found to be invalid or unenforceable, Option 3 as specified in this Rule shall not be available as a method of compliance with the provisions of this Rule.

Additional Minimum Requirements for a Final Control Plan for Stage II include:

(iv) A Description of Compliance Steps.

This description shall include a list of the steps that will be taken at each electric power generating unit to comply with the Stage II compliance schedule. The description must contain a construction schedule. The construction and equipment installation phases of the final control plan will be completed prior to October 1, 1989, for Option 1, or prior to October 1, 1987, for Option 2 or prior to October 1, 1987 for Option 3. This description shall also show that the Stage II maximum emission rates allowed by Part VI of this Rule shall be achieved by January 1, 1990, for Options 1 and 3 or by January 1, 1988 for Option 2.

(v) Unit Tables

A unit table shall be submitted for each unit in the system. Each unit table shall show the estimated emissions when the controls required for Stage II compliance are applied and the unit is burning oil.

Each unit table shall show the rate of emissions

oxides of nitrogen at each of 10 equally spaced load points from minimum load to rated maximum load. The rate shall be shown in pounds of oxides of nitrogen per net megawatt hour. The rate shown shall be the rate to which the unit shall be controlled to achieve compliance with the Stage II maximum emissions rates in Part VI.

(vi) Schedule of Scheduled Shutdowns

The plan shall include a schedule of scheduled shutdowns of units where such shutdowns have a duration of six weeks or more.

(B) Prior to January 1, 1985, for Option 1 or prior to January 1, 1982, for Option 2 or January 1, 1981 for Option 3. Sign initial contracts for the construction and installation of equipment that will lead to the achievement of the Stage II maximum emission rates as required by Part VI of this Rule; issue orders for the purchase of component parts necessary to accomplish such reductions.

(C) Prior to October 1, 1989, for Option 1 or prior to October 1, 1987, for Option 2 or prior to October 1, 1987 for Option 3. complete construction and installation of emissions control equipment and component parts as indicated on the construction schedule of the final control plan.

oxides of nitrogen at each of 10 equally spaced load points from minimum load to rated maximum load. The rate shall be shown in pounds of oxides of nitrogen per net megawatt hour. The rate shown shall be the rate to which the unit shall be controlled to achieve compliance with the Stage II maximum emissions rates in Part VI.

(vi) Schedule of Scheduled Shutdowns

The plan shall include a schedule of scheduled shutdowns of units where such shutdowns have a duration of six weeks or more.

(B) Prior to January 1, 1985, for Option 1 or prior to January 1, 1982, for Option 2 or January 1, 1981 for Option 3. Sign initial contracts for the construction and installation of equipment that will lead to the achievement of the Stage II maximum emission rates as required by Part VI of this Rule; issue orders for the purchase of component parts necessary to accomplish such reductions.

(C) Prior to October 1, 1989, for Option 1 or prior to October 1, 1987, for Option 2 or prior to October 1, 1987 for Option 3. complete construction and installation of emissions control equipment and component parts as indicated on the construction schedule of the final control plan.

(D) Prior to January 1, 1990, for Options 1 and 3 or prior to January 1, 1988, for Option 2. Demonstrate compliance by achieving the Stage II maximum emission rates of Part VI of this Rule. Such demonstration shall also include the submission to the Executive Officer/Air Pollution Control Officer for his or her approval a unit table for each unit. Measured emissions at each unit shall not exceed the emissions at any point or increment on the unit table. In addition, a system-wide composite unit table shall show that emissions from the system shall not exceed the Stage II maximum emission rates of Part VI of this Rule. This system-wide composite unit table shall be constructed in accordance with the criteria set forth in VI(a).

(2) Requirements for an Approval Final Control Plan

An approvable final control plan shall:

(A) Result in compliance with Stage II emissions reduction requirements as expeditiously as practicable;

(B) Satisfy the minimum requirements for a description of compliance steps pursuant to V(b)(1)(A)(i); satisfy the minimum requirements for unit tables pursuant to V(b)(1)(A)(ii); and

(C) With reasonable certainty prevent localized violations of ambient air quality standards.

(D) Show the schedule of conservation efforts, construction or procurement of each new source or conservation of electrical energy which will result in a system-wide reduction of emissions of oxides of nitrogen emitted in the South Coast Air Basin/Ventura County below average 1974 through 1978 annual average emissions, pursuant to Sections V(b)(6) and V(b)(7). The schedule of construction or procurement shall show:

i) the date of approval of officers of the utility to proceed with the construction or procurement;

ii) the date by which contracts shall be signed for new electrical energy for which construction is not required;

iii) the latest dates for the following construction steps:

- Approval of contracts for construction
- Commencement of construction
- Completed installation of major equipment items such as turbines or boilers
- Generation of electrical energy needed to accomplish the emission reduction claimed in subsection V(b)(2)(E)

(C) With reasonable certainty prevent localized violations of ambient air quality standards.

(D) Show the schedule of conservation efforts, construction or procurement of each new source or conservation of electrical energy which will result in a system-wide reduction of emissions of oxides of nitrogen emitted in the South Coast Air Basin/Ventura County below average 1974 through 1978 annual average emissions, pursuant to Sections V(b)(6) and V(b)(7). The schedule of construction or procurement shall show:

i) the date of approval of officers of the utility to proceed with the construction or procurement;

ii) the date by which contracts shall be signed for new electrical energy for which construction is not required;

iii) the latest dates for the following construction steps:

- Approval of contracts for construction
- Commencement of construction
- Completed installation of major equipment items such as turbines or boilers
- Generation of electrical energy needed to accomplish the emission reduction claimed in subsection V(b)(2)(E)

(E) For each of the years covered by the final control plan state the annual amount of electrical energy which will be produced from each new source of energy or conservation for the South Coast Air Basin/Ventura County.

(F) State the maximum amount of emissions of oxides of nitrogen which shall be emitted from the utility's system on any calendar day for each of the years to the final date of the plan. Emissions greater than the amount approved shall constitute a violation of this rule.

(G) State the maximum amount of electrical energy which shall be generated by the utility's combustion units in the South Coast Air Basin/Ventura County in each of the years covered by the plan.

(H) Describe the equipment which shall be installed and operated on the utility's existing units to reduce emissions by the amount claimed for new electrical energy or conservation in the event that such new

energy or conservation or alternative new energy or conservation will not be obtained by the date specified in the schedule required by Section V(b)(2)(D). Also show the latest date by which such equipment shall be installed and operated.

(3) Unapprovable Final Control Plan is a Violation

An owner or operator who submits a final control plan that does not meet the criteria specified in V(b)(2) above is in violation of this Rule. Such violation shall commence on July 1, 1984 for Option 1 or July 1, 1981 for Option 2 or January 1, 1981 for Option 3. Such violation shall remain in effect until an acceptable final control plan has been approved by the Executive Officer/Air Pollution Control Officer.

(4) Reduced Emissions Reduction Requirements for Stage II Compliance

Section V(b)(4) shall not apply to Option 3

The emissions reductions required for Stage II compliance may be reduced provided all of the following are fulfilled:

energy or conservation or alternative new energy or conservation will not be obtained by the date specified in the schedule required by Section V(b)(2)(D). Also show the latest date by which such equipment shall be installed and operated.

(3) Unapprovable Final Control Plan is a Violation

An owner or operator who submits a final control plan that does not meet the criteria specified in V(b)(2) above is in violation of this Rule. Such violation shall commence on July 1, 1984 for Option 1 or July 1, 1981 for Option 2 or January 1, 1981 for Option 3. Such violation shall remain in effect until an acceptable final control plan has been approved by the Executive Officer/Air Pollution Control Officer.

(4) Reduced Emissions Reduction Requirements for Stage II Compliance

Section V(b)(4) shall not apply to Option 3

The emissions reductions required for Stage II compliance may be reduced provided all of the following are fulfilled:

(A) Establishment of Demonstration Unit Performance

Demonstration unit performance shall be established as either:

(i) The demonstration unit has achieved at least 90 percent control; or

(ii) The demonstration unit has been excused from compliance pursuant to VIII(a)(7).

(B) Request by Owner or Operator

The owner or operator may request from the Executive Officer/Air Pollution Control Officer a determination as to whether the affected system can achieve the Stage II maximum allowable emissions rates required by Part VI.

(C) Requirement for Public Hearing

Within 60 days of receiving the request specified in V(b)(4)(B) above, the Executive Officer/Air Pollution Control Officer shall conduct a public hearing on the matter. The owner or operator or any other interested party shall have the right to appear and present evidence at such hearing.

(D) Burden of Proof

The burden of proof shall be upon the party seeking to be excused from compliance with Stage II emission rates. This party shall show that compliance with these rates is not technically feasible or is not cost-effective within the timetable set for compliance by this Rule.

(E) Determination by Executive Officer

In making a determination, the Executive Officer/Air Pollution Control Officer shall consider the following factors:

(i) The performance and cost-effectiveness of any available control measures or combinations of control measures including but not limited to the technology employed on the demonstration unit;

(ii) The efforts taken by the owner or operator to effect compliance; and

(iii) The emissions of pollutants other than oxides of nitrogen.

The Executive Officer/Air Pollution Control Officer shall make a determination within 30 days after the public hearing.

(D) Burden of Proof

The burden of proof shall be upon the party seeking to be excused from compliance with Stage II emission rates. This party shall show that compliance with these rates is not technically feasible or is not cost-effective within the timetable set for compliance by this Rule.

(E) Determination by Executive Officer

In making a determination, the Executive Officer/Air Pollution Control Officer shall consider the following factors:

(i) The performance and cost-effectiveness of any available control measures or combinations of control measures including but not limited to the technology employed on the demonstration unit;

(ii) The efforts taken by the owner or operator to effect compliance; and

(iii) The emissions of pollutants other than oxides of nitrogen.

The Executive Officer/Air Pollution Control Officer shall make a determination within 30 days after the public hearing.

If the Executive Officer/Air Pollution Control Officer determines that compliance with Stage II emissions rates is not technically feasible or cost-effective, the Executive Officer/Air Pollution Control Officer shall modify the Stage II maximum allowable emission rates in Part VI of this Rule. The modifications shall be made to the extent dictated by the evidence.

(5) Units Exempted from Stage II Compliance

Existing combined cycle generating units are exempt from Stage II requirements.

Alternative energy projects as defined in VII(g)(1) are exempt from Stage II requirements.

(6) Additional Replacement of In-Basin Generated Electrical Energy by New Electical Energy or Conservation is an Acceptable Method of Reducing Emissions

Reduction of South Coast Air Basin/Ventura County emissions by the replacement of in-basin generated electrical energy by new electrical energy or conservation is an acceptable method of achieving emission reductions in the final control plan provided

that the electric utility owner or operator demonstrates to the satisfaction of the Executive Officer/Air Pollution Control Officer that:

(A) The owner or operator has a legally enforceable entitlement to such replacement power which lasts for the period during which the reduction in emissions is claimed;

(B) Legally enforceable commitments are made in the final control plan to install and operate control equipment on in-basin unit(s) or obtain equivalent alternative energy to reduce emissions by the amount claimed for replacement power in the event that such replacement power is not obtained by the date specified in the final control plan for achieving such claimed emissions reductions; and

(C) Emissions are reduced by the amounts claimed in the final control plan and in accordance with the schedule in that plan.

that the electric utility owner or operator demonstrates to the satisfaction of the Executive Officer/Air Pollution Control Officer that:

(A) The owner or operator has a legally enforceable entitlement to such replacement power which lasts for the period during which the reduction in emissions is claimed;

(B) Legally enforceable commitments are made in the final control plan to install and operate control equipment on in-basin unit(s) or obtain equivalent alternative energy to reduce emissions by the amount claimed for replacement power in the event that such replacement power is not obtained by the date specified in the final control plan for achieving such claimed emissions reductions; and

(C) Emissions are reduced by the amounts claimed in the final control plan and in accordance with the schedule in that plan.

(D) The utility will implement programs which will reduce consumption of electrical energy by the amount claimed.

Prior to approval of a final control plan the Executive Officer/Air Pollution Control Officer may require the surrender for modification of permits to construct and/or operate pusuant to subsection VII(e).

(7) Methodology for Claiming Credit for Conservation Efforts or New Electrical Energy

The owner or operator who claims emission reductions for conservation efforts or new energy shall compute such reductions according to the method given here. The method is described in text form, and an illustration is provided. The sample is calculated for one load increment for one unit. If credit for conservation efforts or new energy is to be claimed, these calculations shall be performed for each load increment for each unit.

The Following Steps Assume No Replacement Power is Available

A. Determine the hourly emissions in pounds with controls applied to each of the 10 load increments for the unit. This value is derived from the unit table used for compliance with the maximum allowable emissions rate

tables in Part VI of the Rule assuming no replacement power is available. Enter this number in the appropriate block in Row A. In the sample problem, the figure is 100 pounds/hour at load increment 7.

B. Estimate the average annual hours of operation at each of the 10 load increments in base years 1974 through 1978 by a method acceptable to the Executive Officer/Air Pollution Control Officer. Estimates must agree with the actual capacity factors of the units. Enter this estimate in the appropriate block in Row B. In this sample, the hours at load increment 7 are 500 hours. The number of hours shall be consistent with capacity factors in the Common Forecasting Methodology III approved by the Energy Commission.

C. Determine the average annual emissions for each of the 10 load increments if no replacement power is supplied. To do this, multiply the appropriate entries in Row A by the appropriate entries in Row B. In this sample,

100 lbs/hr times 500 hrs/yr = 50,000 lbs/yr
at load increment 7

D. Determine the average annual emissions for the unit. This is done by adding the average annual emissions at each of the 10 load increments calculated in Step C.

tables in Part VI of the Rule assuming no replacement power is available. Enter this number in the appropriate block in Row A. In the sample problem, the figure is 100 pounds/hour at load increment 7.

B. Estimate the average annual hours of operation at each of the 10 load increments in base years 1974 through 1978 by a method acceptable to the Executive Officer/Air Pollution Control Officer. Estimates must agree with the actual capacity factors of the units. Enter this estimate in the appropriate block in Row B. In this sample, the hours at load increment 7 are 500 hours. The number of hours shall be consistent with capacity factors in the Common Forecasting Methodology III approved by the Energy Commission.

C. Determine the average annual emissions for each of the 10 load increments if no replacement power is supplied. To do this, multiply the appropriate entries in Row A by the appropriate entries in Row B. In this sample,

100 lbs/hr times 500 hrs/yr = 50,000 lbs/yr
at load increment 7

D. Determine the average annual emissions for the unit. This is done by adding the average annual emissions at each of the 10 load increments calculated in Step C.

Example of Calculations for Replacement Electrical Energy

Unit xyz

Assume No Replacement Power Available

		LOAD INCREMENT										Sum of annual emissions for unit 3/
		1	2	3	4	5	6	7	8	9	10	
A 1/	Hourly emissions (pounds) with controls applied assuming no replacement power							100				
B	Average annual hours of operation in 1974 through 1978*							500				
C	Average annual emissions without replacement power (A times B)							50,000				D 3/
E	Average annual emissions from the system = sum of unit annual emissions (D) for all units											

Assume Replacement Power Available

F 2/	Hourly emissions (pounds) with relaxed controls assuming replacement power							150				
G	Annual hours of operation in 1990 for Option 1 & 3 or 1988 for Option 2 with replacement power							200				
H	Annual emissions with replacement power (F times G)							30,000				I 3/
J	Average annual emissions from the system = sum of unit annual emissions (I) for all units											

1/ Row A from unit tables used for compliance with Part V of the rule.
2/ Row F is from unit tables with less stringent controls applied than in Row A.
3/ Annual emissions from a unit equals the sum of annual emissions at each of the 10 load increments.

* See Paragraph V(b)(7)(B)

E. Determine the systems total average annual emissions if no replacement power is available and adequate controls are applied to each unit to comply with the maximum allowable emissions rate table in Part VI of the Rule. To do this, add the average annual emissions from each unit in the system as calculated in Step D.

The Following Steps Assume Replacement Power is Available

F. Determine the hourly emissions in pounds with relaxed controls applied at each of the 10 load increments for the unit. This value is derived from relaxing controls that are assumed for the unit in Step A. Enter this number in the appropriate block on Row F. In the sample problem, the emissions for the less stringently controlled unit at load increment 7 is now 150 pounds/hr.

G. Determine the average annual hours of operation at each of the 10 load increment in 1990 for Option 1 and 3 or 1988 for Option 2 assuming replacement power is available. Enter this estimate in the appropriate block in Row G. In the sample, the hours at load increment 7 with replacement power available is 200 hours.

E. Determine the systems total average annual emissions if no replacement power is available and adequate controls are applied to each unit to comply with the maximum allowable emissions rate table in Part VI of the Rule. To do this, add the average annual emissions from each unit in the system as calculated in Step D.

The Following Steps Assume Replacement Power is Available

F. Determine the hourly emissions in pounds with relaxed controls applied at each of the 10 load increments for the unit. This value is derived from relaxing controls that are assumed for the unit in Step A. Enter this number in the appropriate block on Row F. In the sample problem, the emissions for the less stringently controlled unit at load increment 7 is now 150 pounds/hr.

G. Determine the average annual hours of operation at each of the 10 load increment in 1990 for Option 1 and 3 or 1988 for Option 2 assuming replacement power is available. Enter this estimate in the appropriate block in Row G. In the sample, the hours at load increment 7 with replacement power available is 200 hours.

H. Determine the average annual emissions for each of the 10 load increments if replacement power is supplied and controls are relaxed. To do this, multiply the appropriate entries in Row F by the appropriate entries in Row G. In this sample,

150 lbs/hr times 200 hrs = 30,000 lbs/yr
at load increment 7

I. Determine the average annual emissions for the unit with relaxed controls and new hours of operation by adding the average annual emissions at each of the 10 load increments calculated in Step H.

J. Determine the system's total annual emissions if replacement power is available and controls are relaxed on some units. To do this, add the annual emissions from each unit as calculated in Step I.

K. The system's total annual emissions with replacement power and relaxed controls shall be less than or equal to the system's total annual emissions with no replacement power and with adequate controls applied to each unit to meet the maximum allowable emissions rate tables in Part (VI) of the Rule. Specifically J shall be less than or equal to E.

(8) Violation of Control Plan is a Violation of Rule

A violation of an approved final control plan is a violation of this rule. Where the Executive Officer/Air Pollution Control Officer determines that a violation of the schedules of equipment installation or procurement of new power shown in the Final Control Plan has occurred, as a result of circumstances beyond the control of the affected utility, a "Notice to Comply" shall first be issued to the violating utility before the issuance of any "Notice of Violation." Failure to correct the violation within sixty days from the date of issuance of "Notice to Comply" shall be followed by a "Notice of Violation" of the rule and enforcement action.

(8) Violation of Control Plan is a Violation of Rule

A violation of an approved final control plan is a violation of this rule. Where the Executive Officer/Air Pollution Control Officer determines that a violation of the schedules of equipment installation or procurement of new power shown in the Final Control Plan has occurred, as a result of circumstances beyond the control of the affected utility, a "Notice to Comply" shall first be issued to the violating utility before the issuance of any "Notice of Violation." Failure to correct the violation within sixty days from the date of issuance of "Notice to Comply" shall be followed by a "Notice of Violation" of the rule and enforcement action.

(9) At any time after January 1, 1982, the owner or operator may petition the Air Resources Board to amend the requirements of this rule, based upon circumstances which have changed since the date of adoption of this rule, including, but not by way of limitation, the following:

(A) The cost-effectiveness or technical feasibility of emission control equipment comtemplated in any control plan submitted pursuant to this rule.

(B) The effect of power plant NOx emission on federal and state ambient air quality standards and the cost-effectiveness of power plant NOx reduction to achieve or maintain such ambient air quality standards.

(C) Federal or state law, rules, regulations, or policy affecting the utilization of gas or oil as power plant fuel.

Part VI. MAXIMUM ALLOWABLE EMISSIONS RATE TABLES

This part does not apply to Option 4.

(a) Table Criteria

The criteria set forth here were assumed in the construction of the maximum allowable emissions rate tables:

(1) All existing electric power generating units were considered to be available and burning oil;

(2) Each unit of the system was assumed to have nine equal increments of load between the unit's minimum load and its rated maximum load and one increment of load between zero load and minimum load;

(3) The incremental rate of emissions was determined for each increment of load assumed in Criterion 2 above. This rate is based on the assumption that emission controls required for compliance with the appropriate stage are installed and properly operating on the unit. The rate is calculated in incremental pounds of emissions of oxides of nitrogen per incremental net megawatt hour;

(4) A unit table was prepared for each electrical power generating unit. Each unit table is based on Criteria 1, 2, and 3 above. Each unit table was constructed to show the rate of emissions at each of 10 equally spaced load points from minimum load to maximum rated load;

(5) The increments of load identified in Criteria 2 and 3 above were ranked in order of increasing incremental pounds per net megawatt hour;

Part VI. MAXIMUM ALLOWABLE EMISSIONS RATE TABLES

This part does not apply to Option 4.

(a) Table Criteria

The criteria set forth here were assumed in the construction of the maximum allowable emissions rate tables:

(1) All existing electric power generating units were considered to be available and burning oil;

(2) Each unit of the system was assumed to have nine equal increments of load between the unit's minimum load and its rated maximum load and one increment of load between zero load and minimum load;

(3) The incremental rate of emissions was determined for each increment of load assumed in Criterion 2 above. This rate is based on the assumption that emission controls required for compliance with the appropriate stage are installed and properly operating on the unit. The rate is calculated in incremental pounds of emissions of oxides of nitrogen per incremental net megawatt hour;

(4) A unit table was prepared for each electrical power generating unit. Each unit table is based on Criteria 1, 2, and 3 above. Each unit table was constructed to show the rate of emissions at each of 10 equally spaced load points from minimum load to maximum rated load;

(5) The increments of load identified in Criteria 2 and 3 above were ranked in order of increasing incremental pounds per net megawatt hour;

(6) Individual unit tables were combined for each size electrical power generating system shown in the maximum allowalbe emissions rate tables; and

(7) Demand for electrical energy was assumed to be filled by changing load in the increments identified in Criterion 2 above and in the order determined in Criterion 5 above. For the purpose of filling the next highest system-wide increment of deamnd, no unit was assumed to be reduced in load. In addition, no increment of load was used unless all lower increments for that same unit had been used.

(b) Construction of Additional Tables

The construction of any additional maximum allowable emissions rate tables or system-wide composite unit tables shall be accomplished in accordance with the criteria in V(a) above.

In addition, any other method of adding increments of capacity of units to satisfy system-wide load can be used provided it is shown to yield equivalent results.

Part VI MAXIMUM ALLOWABLE EMISSIONS RATE TABLES

TABLE I

MAXIMUM ALLOWABLE RATE OF EMISSIONS OF OXIDES OF NITROGEN ASSUMING THAT ALL ELECTRIC POWER GENERATING UNITS IN THE SYSTEM ARE AVAILABLE, AS A FUNCTION OF NET SYSTEM LOAD FOR ELECTRIC POWER GENERATING SYSTEMS HAVING A TOTAL GENERATING CAPACITY OF GREATER THAN 5000 MEGAWATTS AS OF JANUARY 1, 1978

NET SYSTEM LOAD IN MEGAWATTS	MAXIMUM ALLOWABLE RATE OF OXIDES OF NITROGEN EMISSIONS POUNDS/HOUR, ON OR AFTER DECEMBER 31, 1983		MAXIMUM ALLOWABLE RATE OF OXIDES OF NITROGEN EMISSIONS POUNDS/HOUR, ON OR AFTER JANUARY 1, 1990 FOR Options for 1 & 3 AFTER JANUARY 1, 1988 FOR OPTION 2
	Option 1	Option 2	
500	733	808	88
1000	1,234	1,430	173
1500	1,736	2,052	255
2000	2,238	2,673	332
2500	2,758	3,295	424
3000	3,331	3,917	519
3500	3,904	4,642	633
4000	4,478	5,402	731
4500	5,054	6,197	839
5000	5,632	7,042	948
5500	6,211	7,887	1071
6000	6,800	8,732	1186
6500	7,400	9,577	1318
7000	8,210	10,422	1459
7500	9,002	11,267	1627
8000	10,370	12,650	1871
8500	12,762	15,115	2312
9000 or Greater	30,217	36,463	5709

NOTE: To determine the maximum allowable emissions for net system loads other than those shown, use linear interpolation between the two net system loads that bracket the net system load desired.

Part VI MAXIMUM ALLOWABLE EMISSIONS RATE TABLES
TABLE 1

MAXIMUM ALLOWABLE RATE OF EMISSIONS OF OXIDES OF NITROGEN ASSUMING THAT ALL ELECTRIC POWER GENERATING UNITS IN THE SYSTEM ARE AVAILABLE, AS A FUNCTION OF NET SYSTEM LOAD FOR ELECTRIC POWER GENERATING SYSTEMS HAVING A TOTAL GENERATING CAPACITY OF GREATER THAN 5000 MEGAWATTS AS OF JANUARY 1, 1978

NET SYSTEM LOAD IN MEGAWATTS	MAXIMUM ALLOWABLE RATE OF OXIDES OF NITROGEN EMISSIONS POUNDS/HOUR, ON OR AFTER DECEMBER 31, 1983		MAXIMUM ALLOWABLE RATE OF OXIDES OF NITROGEN EMISSIONS POUNDS/HOUR, ON OR AFTER JANUARY 1, 1990 FOR Options for 1 & 3 AFTER JANUARY 1, 1988 FOR OPTION 2
	Option 1	Option 2	
500	733	808	88
1000	1,234	1,430	173
1500	1,736	2,052	255
2000	2,238	2,673	332
2500	2,758	3,295	424
3000	3,331	3,917	519
3500	3,904	4,642	633
4000	4,478	5,402	731
4500	5,054	6,197	839
5000	5,632	7,042	948
5500	6,211	7,887	1071
6000	6,800	8,732	1186
6500	7,400	9,577	1318
7000	8,210	10,422	1459
7500	9,002	11,267	1627
8000	10,370	12,650	1871
8500	12,762	15,115	2312
9000 or Greater	30,217	36,463	5709

NOTE: To determine the maximum allowable emissions for net system loads other than those shown, use linear interpolation between the two net system loads that bracket the net system load desired.

TABLE II

MAXIMUM ALLOWABLE RATE OF EMISSIONS OF OXIDES OF NITROGEN ASSUMING THAT ALL ELECTRIC POWER GENERATING UNITS IN THE SYSTEM ARE AVAILABLE, AS A FUNCTION OF NET SYSTEM LOAD FOR ELECTRIC POWER GENERATING SYSTEMS HAVING A TOTAL GENERATING CAPACITY OF LESS THAN 5000 MEGAWATTS AND EQUAL TO OR MORE THAN 500 MEGAWATTS AS OF JANUARY 1, 1978

NET SYSTEM LOAD IN MEGAWATTS	MAXIMUM ALLOWABLE RATE OF OXIDES OF NITROGEN EMISSIONS POUNDS/HOUR, ON OR AFTER DECEMBER 31, 1983		MAXIMUM ALLOWABLE RATE OF OXIDES OF NITROGEN EMISSIONS POUNDS/HOUR, ON OR AFTER JANUARY 1, 1990 FOR Options 1 & 3 AFTER JANUARY 1, 1988 FOR OPTION 2
	Option 1	Option 2	
200	271	305	27
400	482	588	54
600	693	871	88
800	912	1,154	130
1000	1,133	1,437	159
1200	1,355	1,720	205
1400	1,576	2,003	243
1600	1,790	2,286	290
1800	1,969	2,570	335
2000	2,195	2,853	390
2200	2,407	3,136	439
2400	2,749	3,419	507
2600	3,281	3,854	581
2800	3,945	4,533	674
3000	4,783	5,372	784
3200	5,890	6,479	919
3400 or Greater	8,401	8,989	1199

NOTE: To determine the maximum allowable emissions for net system loads other than those shown, use linear interpolation between the two net system loads that bracket the net system load desired.

TABLE III

MAXIMUM ALLOWABLE RATE OF EMISSIONS OF OXIDES OF NITROGEN ASSUMING THAT ALL ELECTRIC POWER GENERATING UNITS IN THE SYSTEM ARE AVAILABLE, AS A FUNCTION OF NET SYSTEM LOAD FOR ELECTRIC POWER GENERATING SYSTEMS HAVING A TOTAL GENERATING CAPACITY OF LESS THAN 500 MEGAWATTS AS OF JANUARY 1, 1978

NET SYSTEM LOAD IN MEGAWATTS	MAXIMUM ALLOWABLE RATE OF OXIDES OF NITROGEN EMISSIONS POUNDS/HOUR, ON OR AFTER DECEMBER 31, 1983		MAXIMUM ALLOWABLE RATE OF OXIDES OF NITROGEN EMISSIONS POUNDS/HOUR, ON OR AFTER JANUARY 1, 1990 FOR Options 1 & 3 AFTER JANUARY 1, 1988 FOR OPTION 2
	Option 1	Option 2	
20	64	82	7
40	103	137	12
60	154	192	18
80	206	247	26
100	257	302	35
120	311	368	46
140	370	439	58
160	428	510	72
180	503	581	86
200	587	681	105
220	756	850	130
240 or greater	996	1,090	166

NOTE: To determine the maximum allowable emissions for net system loads other than those shown, use linear interpolation between the two net system loads that bracket the net system load desired.

TABLE III

MAXIMUM ALLOWABLE RATE OF EMISSIONS OF OXIDES OF NITROGEN ASSUMING THAT ALL ELECTRIC POWER GENERATING UNITS IN THE SYSTEM ARE AVAILABLE, AS A FUNCTION OF NET SYSTEM LOAD FOR ELECTRIC POWER GENERATING SYSTEMS HAVING A TOTAL GENERATING CAPACITY OF LESS THAN 500 MEGAWATTS AS OF JANUARY 1, 1978

NET SYSTEM LOAD IN MEGAWATTS	MAXIMUM ALLOWABLE RATE OF OXIDES OF NITROGEN EMISSIONS POUNDS/HOUR, ON OR AFTER DECEMBER 31, 1983		MAXIMUM ALLOWABLE RATE OF OXIDES OF NITROGEN EMISSIONS POUNDS/HOUR, ON OR AFTER JANUARY 1, 1990 FOR Options 1 & 3 AFTER JANUARY 1, 1988 FOR OPTION 2
	Option 1	Option 2	
20	64	82	7
40	103	137	12
60	154	192	18
80	206	247	26
100	257	302	35
120	311	368	46
140	370	439	58
160	428	510	72
180	503	581	86
200	587	681	105
220	756	850	130
240 or greater	996	1,090	166

NOTE: To determine the maximum allowable emissions for net system loads other than those shown, use linear interpolation between the two net system loads that bracket the net system load desired.

Part VII. ADDITIONAL PROVISIONS

This part does not apply to Option 4.

(a) Data Requirements

(1) Data to be Obtained by Measurements

Any oxides of nitrogen emissions data required by this Rule shall be based on measurements of emissions on applicable units. Such measurements shall be conducted at times and in a manner acceptable to the Executive Officer/Air Pollution Control Officer

The term "Any oxides of nitrogen emissions data" used above includes that data on which unit tables are based.

(2) Need for Additional Information

Additional information that is deemed necessary by the Executive Officer/Air Pollution Control Officer to ascertain the validity of submitted data shall be furnished to the Executive Officer/Air Pollution Control Officer the owner or operator of the effected unit within 60 days of the Executive Officer's/ Air Pollution Control Officer's written request.

(3) Resolving Discrepancies in Data

If the Executive Officer/ Air Pollution Control Officer determines that the rate of emissions of oxides of nitrogen from any unit is different from the rate shown

in the data submitted for approval, the Executive Officer/Air Pollution Control Officer shall notify in writing the owner or operator that a difference exists. The Executive Officer/ Air Pollution Control Officer may then substitute the data from his or her determination for the data submitted.

(b) Interpolation

The rate of emissions of oxides of nitrogen at points in the operating range of a unit or system that is not coincident with data submitted shall be determined by linear interpolation between the two points that bracket the point desired.

(c) Agreement to Combine Systems

Owners or operators of electrical power generating systems may enter into mutual written agreements to combine systems. For the purposes of this Rule, these combined systems shall be considered as one. If systems are combined, the maximum allowable emissions rate table in Part VI of this Rule and which is applicable to said owners or operators shall be superseded and replaced by a new table of like form. The new table shall reflect such agreement and provide for an identical level of system-wide control. Such revised table shall be derived by the Executive Officer/Air Pollution Control Officer.

An agreement to combine systems does not alter the status of demonstration units. Units previously selected as demonstration units shall continue to serve that purpose, and the provisions of VIII shall remain in effect for those units.

in the data submitted for approval, the Executive Officer/Air Pollution Control Officer shall notify in writing the owner or operator that a difference exists. The Executive Officer/Air Pollution Control Officer may then substitute the data from his or her determination for the data submitted.

(b) Interpolation

The rate of emissions of oxides of nitrogen at points in the operating range of a unit or system that is not coincident with data submitted shall be determined by linear interpolation between the two points that bracket the point desired.

(c) Agreement to Combine Systems

Owners or operators of electrical power generating systems may enter into mutual written agreements to combine systems. For the purposes of this Rule, these combined systems shall be considered as one. If systems are combined, the maximum allowable emissions rate table in Part VI of this Rule and which is applicable to said owners or operators shall be superseded and replaced by a new table of like form. The new table shall reflect such agreement and provide for an identical level of system-wide control. Such revised table shall be derived by the Executive Officer/Air Pollution Control Officer.

An agreement to combine systems does not alter the status of demonstration units. Units previously selected as demonstration units shall continue to serve that purpose, and the provisions of VIII shall remain in effect for those units.

(d) Consultation with Other Districts

Prior to making a determination regarding the acceptability of any plans, data, or any other information required by this Rule, the Executive Officer/Air Pollution Control Officer shall consult with the Executive Officer/Air Pollution Control Officer of any other Air Pollution Control District that would be affected by this Rule.

(e) Permit Provisions

Any person operating basic equipment under permit pursuant to this Rule and who plans to make modifications to that equipment or related control equipment for the purpose of reducing oxides of nitrogen emissions as required by this Rule, shall apply for new permits to construct or operate both basic and control equipment involved in such reductions regardless of whether modifications or additions are to be made to either basic or control equipment or both.

Existing permits to operate pertaining to the basic and control equipment as specified above shall be surrendered and cancelled when such new permits to operate are issued. New permits shall not be effective unless surrender of such existing permits is made.

(f) Continuous Monitoring of Ammonia

An owner or operator of an electric power generating unit that uses ammonia to comply with this Rule shall not operate that unit unless the unit is equipped with instruments to continuously monitor and record the concentration of ammonia in the flue gas. Ammonia concentrations shall be monitored when ammonia is being introduced into the flue gas of the unit. The recorded data shall be retained by the owner or operator of the affected electric power generating system for at least two years from the date of recording. These data shall be available for inspection and/or reproduction upon the request of the Executive Officer/ Air Pollution Control Officer.

The Executive Officer/Air Pollution Control Officer shall determine the acceptability of any instrument used to comply with this Section. Such determination shall be made prior to the instrument's installation.

(f) Continuous Monitoring of Ammonia

An owner or operator of an electric power generating unit that uses ammonia to comply with this Rule shall not operate that unit unless the unit is equipped with instruments to continuously monitor and record the concentration of ammonia in the flue gas. Ammonia concentrations shall be monitored when ammonia is being introduced into the flue gas of the unit. The recorded data shall be retained by the owner or operator of the affected electric power generating system for at least two years from the date of recording. These data shall be available for inspection and/or reproduction upon the request of the Executive Officer/ Air Pollution Control Officer.

The Executive Officer/Air Pollution Control Officer shall determine the acceptability of any instrument used to comply with this Section. Such determination shall be made prior to the instrument's installation.

(g) Exemptions

(1) Alternative Energy Projects

(A) Cogeneration and Alternative Fuel Units

The provisions of this Rule do not apply to cogeneration units or units in which refuse-derived fuel or biomass fuel is burned to satisfy at least 50 percent of the total heat demand of that unit. For the purposes of this Rule, a cogeneration unit is one that concurrently recovers for sale by the system's owner or operator a substantial fraction of the input energy as other forms of energy for industrial or commercial heating or cooling purposes. The Executive Officer shall determine what a substantial fraction is, but in no event shall it be less than 25 percent.

For the purposes of this Rule, cogeneration units do not include combined cycle generating units.

(B) Existing Units Modified to Cogeneration Units

Existing units modified to cogeneration units that do not meet the requirements for cogeneration units in VII(g)(1)(A) above on or before August 7, 1978, but are thereafter modified to meet those requirements shall for the purposes of this Rule be considered as new units. These units shall be subject to the new source review provisions of Regulation XIII of the South Coast Air Quality Management District or with Rule 26 of the Ventura County Air Pollution Control District, whichever applies.

(2) Simple Cycle Gas Turbine Units

The provisions of this Rule do not apply to simple cycle gas turbine electric power generating units.

(3) Existing Combined Cycle Units: PARTIAL EXEMPTION

Electric power generating units that are permitted to operate as combined cycle gas turbine units on or before August 7, 1978, are exempt from the provisions of this Rule except for IV(b), "Emissions Dispatch Plan," which applies fully.

(h) Prohibited Modification

An existing unit shall not be modified so as to result in a net increase in its emissions of oxides of nitrogen.

(2) Simple Cycle Gas Turbine Units

The provisions of this Rule do not apply to simple cycle gas turbine electric power generating units.

(3) Existing Combined Cycle Units: PARTIAL EXEMPTION

Electric power generating units that are permitted to operate as combined cycle gas turbine units on or before August 7, 1978, are exempt from the provisions of this Rule except for IV(b), "Emissions Dispatch Plan," which applies fully.

(h) Prohibited Modification

An existing unit shall not be modified so as to result in a net increase in its emissions of oxides of nitrogen.

Part VIII. DEMONSTRATION UNIT

This part does not apply to Options 3 and 4.

(a) Demonstration Unit Requirements

A demonstration unit is a unit selected to demonstrate control technology that can be used to achieve Stage II system-wide reductions of 90 percent.

(1) Applicable Unit

A demonstration unit is an electric power generating unit with an electrical generating capacity equal to or greater than:

(A) 100 megawatts or equivalent flue gas volume: Selection 1; or

(B) 350 megawatts or equivalent flue gas volume: Selection 2.

(2) Applicable System

The requirement for a demonstration unit applies only to owners or operators of electric power generating systems with power generating capacities equal to or greater than 500 megawatts.

(3) Number of Required Units

Each system of at least 500 megawatts shall have at least one demonstration unit.

(4) Required Emissions Reductions

The owner or operator of the demonstration unit shall reduce the rate of emissions of oxides of nitrogen by at least 90 percent throughout the demonstration unit's operating range. The rate of reduction shall be determined from the approved unit table for the affected unit. A unit table for a demonstration unit shall meet the minimum requirements stated in the compliance schedule

in VIII(a)(5) below.

(5) Demonstration Unit Compliance Schedule

The emission reductions required by VIII(a)(4) above shall be achieved as expeditiously as practicable but prior to January 1, 1982, for Selection 1 or October 1, 1983, for Selection 2. The owner or operator of a demonstration unit shall fulfill the following minimum requirements:

(A) Prior to May 1, 1980, for both Selection 1 and Selection 2 submit the following to the Executive Officer/Air Pollution Control Officer. Also submit a copy to the Executive Officer of the Air Resources Board:

(i) A final control plan that identifies the unit selected to be the demonstration unit. The final control plan shall describe the minimum steps that will be taken to achieve the required 90 percent reduction by January 1, 1982, for Selection 1 or prior to October 1, 1983, for Selection 2.

The final control plan shall also contain a construction schedule. The construction schedule shall show completion of the construction and equipment installation phases prior to October 1, 1981, for Selection 1 or prior to July 1, 1983, for Selection 2.

in VIII(a)(5) below.

(5) Demonstration Unit Compliance Schedule

The emission reductions required by VIII(a)(4) above shall be achieved as expeditiously as practicable but prior to January 1, 1982, for Selection 1 or October 1, 1983, for Selection 2. The owner or operator of a demonstration unit shall fulfill the following minimum requirements:

(A) Prior to May 1, 1980, for both Selection 1 and Selection 2 submit the following to the Executive Officer/Air Pollution Control Officer. Also submit a copy to the Executive Officer of the Air Resources Board:

(i) A final control plán that identifies the unit selected to be the demonstration unit. The final control plan shall describe the minimum steps that will be taken to achieve the required 90 percent reduction by January 1, 1982, for Selection 1 or prior to October 1, 1983, for Selection 2.

The final control plan shall also contain a construction schedule. The construction schedule shall show completion of the construction and equipment installation phases prior to October 1, 1981, for Selection 1 or prior to July 1, 1983, for Selection 2.

(ii) Unit tables as described here. One unit table shall show emissions upstream of control equipment when the unit is burning oil. A second unit table shall show estimated emissions downstream of control equipment when the unit is burning oil. A comparison of the two unit tables shall be made by the Executive Officer/Air Pollution Control Officer to determine if the 90 percent reduction shall be achieved. This second unit table shall also be used when constructing the system-wide composite unit tables required for Stage I compliance pursuant to V(a)(1)(D) and for Stage II compliance pursuant to V(b)(1)(D).

(B) Prior to May 1, 1980. Sign initial contracts for the construction and installation of equipment that will begin to effect the emissions reductions required by this Rule; issue orders for the purchase of component parts to accomplish such reductions. Such contracts and orders shall be submitted to the Executive Officer/ Air Pollution Control Officer. Also, submit copies of such contracts to the Executive Officer of the Air Resources Board.

(C) Prior to October 1, 1981, for Selection 1 or prior to July 1, 1983, for Selection 2. Complete construction and installation of emissions control equipment and component parts as indicated on the construction schedule of the final control plan.

(D) Prior to January 1, 1982, for Selection 1 or prior to October 1, 1983, for Selection 2. Demonstrate compliance by achieving the required 90 percent reduction. Such demonstration shall include the submission of unit tables to the Executive Officer/ Air Pollution Control Officer for his or her approval.

(6) Compliance

(A) Inadequate Final Control Plan is a Violation

An inadequate final control plan is one that will not achieve the 90 percent emissions reduction requirement as expeditiously as practicable. This criterion applies even if the plan ensures compliance by the date specified in the compliance schedule.

If the Executive Officer/Air Pollution Control Officer determines at any time that a final control plan is inadequate according to the criteria above. the owner or operator of the affected electric power generating system shall be in violation of this Rule. Such violation shall commence on the date the determination was made be the Executive Officer/Air Pollution Control Officer. Such violation shall remain in effect until an adequate final control plan has been approved by the Executive Officer/Air Pollution Control Officer.

(B) Noncompliance with Plan is a Violation

Unless otherwise excused by VIII (a)(7) below, any failure to achieve and demonstrate the required 90 percent reduction shall constitute a violation of this Rule.

(D) Prior to January 1, 1982, for Selection 1 or prior to October 1, 1983, for Selection 2. Demonstrate compliance by achieving the required 90 percent reduction. Such demonstration shall include the submission of unit tables to the Executive Officer/ Air Pollution Control Officer for his or her approval.

(6) Compliance

(A) Inadequate Final Control Plan is a Violation

An inadequate final control plan is one that will not achieve the 90 percent emissions reduction requirement as expeditiously as practicable. This criterion applies even if the plan ensures compliance by the date specified in the compliance schedule.

If the Executive Officer/Air Pollution Control Officer determines at any time that a final control plan is inadequate according to the criteria above. the owner or operator of the affected electric power generating system shall be in violation of this Rule. Such violation shall commence on the date the determination was made be the Executive Officer/Air Pollution Control Officer. Such violation shall remain in effect until an adequate final control plan has been approved by the Executive Officer/Air Pollution Control Officer.

(B) Noncompliance with Plan is a Violation

Unless otherwise excused by VIII (a)(7) below, any failure to achieve and demonstrate the required 90 percent reduction shall constitute a violation of this Rule.

(7) Excusal from Required Emissions Reduction

Any system owner or operator which is required to achieve such 90 percent reduction shall be excused from this requirement if the Executive Officer/Air Pollution Control Officer makes a final determination that:

(A) The maximum achievable reduction has been demonstrated;

(B) The maximum achievable reduction is less than 90 percent; and

(C) The owner or operator has taken all reasonably available steps to effect such reduction.

Part IX Option 4

This part does not apply to Options 1, 2 and 3.

(a) Emission Reduction Requirements

The owner or operator of a system shall reduce system-wide annual average and daily maximum oxides of nitrogen emissions by 90% and 75%, respectively, from the system-wide average of 1974 through 1978 annual average and maximum daily amounts respectively by January 1990, the final compliance date for this rule. The owner or operator shall also reduce oxides of nitrogen emissions before 1990 by at least the percentages and by the dates shown in Table IX-1 of this section. In addition to meeting the percentage reductions identified in Table IX-1, the owner or operator shall obtain the further emission reductions which will result from compliance with the requirements of paragraph (e) of this Part IX. Except as required by Section (e), variations may be allowed if approved in writing by the Executive Officer/Air Pollution Control Officer and if the Executive Officer/Air Pollution Control Officer determines that subsequent reductions will be achieved in accordance with the schedule in Table IX-1.

Table IX-1
NOx Emission Reduction from
Average of Years 1974 through 1978

Year	Average %Reduction	Daily Maximum % Reduction
1982	18	15
1983	27	22.5
1984	36	30
1985	45	37.5
1986	54	45
1987	63	52.5
1988	72	60
1989	81	67.5
1990	90	75

Part IX Option 4

This part does not apply to Options 1, 2 and 3.

(a) Emission Reduction Requirements

The owner or operator of a system shall reduce system-wide annual average and daily maximum oxides of nitrogen emissions by 90% and 75%, respectively, from the system-wide average of 1974 through 1978 annual average and maximum daily amounts respectively by January 1990, the final compliance date for this rule. The owner or operator shall also reduce oxides of nitrogen emissions before 1990 by at least the percentages and by the dates shown in Table IX-1 of this section. In addition to meeting the percentage reductions identified in Table IX-1, the owner or operator shall obtain the further emission reductions which will result from compliance with the requirements of paragraph (e) of this Part IX. Except as required by Section (e), variations may be allowed if approved in writing by the Executive Officer/Air Pollution Control Officer and if the Executive Officer/Air Pollution Control Officer determines that subsequent reductions will be achieved in accordance with the schedule in Table IX-1.

Table IX-1
NOx Emission Reduction from
Average of Years 1974 through 1978

Year	Average %Reduction	Daily Maximum % Reduction
1982	18	15
1983	27	22.5
1984	36	30
1985	45	37.5
1986	54	45
1987	63	52.5
1988	72	60
1989	81	67.5
1990	90	75

Compliance with these emission reduction requirements shall be based on annual average and daily maximum total South Coast Air Basin/Ventura County emissions in tons per day, developed using unit NOx concentration measurements and calculated exhaust gas flow levels. These values shall not exceed emission limits established according to the reductions contained in Table IX-1. The utility shall submit on a monthly basis and not later than 30 days following the end of each month daily NOx emissions data for each unit in the South Coast Air Basin/Ventura County for the purpose of determining compliance.

(b) Reduction Methods

Emission reductions shall be accomplished by any method the utility chooses including, but not limited to the following:

(1) Application of new emission controls

(2) Modification or optimization of existing emission controls

(3) Use of cleaner fuels (including natural gas if under firm contract).

(4) Reduction of generation in the South Coast Air Basin/Ventura County by increased generation outside that area. Such electrical energy shall be credited to the extent it reduces emissions within the South Coast Air Basin/Ventura County.

(5) Least NOx dispatch

(c) Exceptions

The owner or operator may, during a system emergency, operates a unit or system in excess of the emissions limits in Section (a) provided that total oxides of nitrogen emissions are otherwise minimized.

The Executive Officer/Air Pollution Control Officer shall be advised of any violation, the reason for it, and expected duration within 24 hours of the occurrence or within four hours after the start of the next normal business day. The utility shall file a written report to the Executive Officer/Air Pollution Control Officer within one week of the occurrence and shall include estimated emissions in excess of this rule. The utility shall make available for inspection by the Executive Officer/Air Pollution Control Officer such records that establish that there was a system emergency.

For the purpose of this rule, a "system emergency" means a situation when, due to unavailability of scheduled generating capacity or due to unanticipated peak demand, the projected on-line energy producing capacity (including firm purchased power) directly available to the system operator is less than five percent of the anticipated system peak load and appears to be further decreasing to 2-1/2 percent or less.

(d) Compliance Plan

The utility shall submit a compliance plan to the Executive Officer/Air Pollution Control Officer no later than June 1, 1980, for approval and shall submit updated plans annually thereafter. Each plan shall show which methods shall be utilized to reduce South Coast Air Basin/Ventura County emissions to meet the requirements of Section IX(a). The control plan and each annual update shall contain as a minimum:

(1) A resource plan identifying out-of-South-Coast-Air-Basin/Ventura-County generation to be integrated into the utility system and a projection

The Executive Officer/Air Pollution Control Officer shall be advised of any violation, the reason for it, and expected duration within 24 hours of the occurrence or within four hours after the start of the next normal business day. The utility shall file a written report to the Executive Officer/Air Pollution Control Officer within one week of the occurrence and shall include estimated emissions in excess of this rule. The utility shall make available for inspection by the Executive Officer/ Air Pollution Control Officer such records that establish that there was a system emergency.

For the purpose of this rule, a "system emergency" means a situation when, due to unavailability of scheduled generating capacity or due to unanticipated peak demand, the projected on-line energy producing capacity (including firm purchased power) directly available to the system operator is less than five percent of the anticipated system peak load and appears to be further decreasing to 2-1/2 percent or less.

(d) Compliance Plan

The utility shall submit a compliance plan to the Executive Officer/Air Pollution Control Officer no later than June 1, 1980, for approval and shall submit updated plans annually thereafter. Each plan shall show which methods shall be utilized to reduce South Coast Air Basin/Ventura County emissions to meet the requirements of Section IX(a). The control plan and each annual update shall contain as a minimum:

(1) A resource plan identifying out-of-South-Coast-Air-Basin/Ventura-County generation to be integrated into the utility system and a projection

of the resulting South Coast Air Basin/Ventura County emissions reductions for each of the remaining years to 1990.

(2) A description of the control equipment which will be installed on units and which will be necessary to comply with final emissions reductions requirements of this rule (90 percent annual average and 75 percent peak daily emissions reductions) and the respective units on which such equipment will be installed.

(3) A description of all other steps by which emissions will be reduced to comply with the final emissions reduction requirements of this rule.

(4) A construction schedule and date of operation for all equipment installation necessary to meet the provisions of this part, consistent with Section (e) of this part.

(5) Contingency plans and implementation dates for achieving the required South Coast Air Basin/Ventura County emission reductions in the event the generation identified in the resource plan in #1 above is not obtained in accordance with the plan. Such contingency plans and/or implementation dates may be amended upon filing of an amended contingency plan or schedule and approved by the Executive Officer/Air Pollution Control Officer.

(6) Oil reduction compliance plans filed with Federal and/or State agencies.

(7) The compliance schedule shall contain aggregate emission limits for all units within the District and shall represent an enforceable daily and annual emission limit upon approval of the Compliance Plan.

(8) A methodology for determining compliance with provisions of this rule. Such methodology may be detailed in the form of a Letter of Agreement between the Executive Officer/Air Pollution Control Officer.

(9) A schedule of scheduled shutdowns of units where such shutdowns will have a duration of six weeks or more.

(e) Dates When Controls Must be Installed

(1) The controls identified in the compliance plan required to comply with the final emissions reductions requirement of this part shall be installed as expeditiously as practicable but in no event later than during the first regularly scheduled shutdown of each affected unit which commences after January 1, 1982. For the purpose of this section, a scheduled shutdown shall be of six weeks or more duration and scheduled at least eighteen months in advance of the shutdown. Postponement of a shutdown does not exempt the owner or operator of the system from the requirement to install controls.

(2) In the event that the owner or operator of such utility can demonstrate to the District's Hearing Board that controls on a unit cannot be installed during the first scheduled shutdown because: 1. The control equipment cannot be delivered by the supplier(s) in time for the shutdown; or 2. The amount of time required for the installation of equipment would cause the duration of the shutdown to be extended such that the reliability of the system would be jeopardized, then the Hearing Board may extend the date controls must be installed on that unit by not more than two years. Such a variance shall not affect the requirement to install controls on other units.

(3) If this Section IX(e) is found to be invalid or unenforceable, Option 4 as specified in this Rule shall not be available as a method of compliance with the provisions of this Rule.

(f) Requirement for New Permits

Any person operating basic equipment under permit pursuant to this

(e) Dates When Controls Must be Installed

(1) The controls identified in the compliance plan required to comply with the final emissions reductions requirement of this part shall be installed as expeditiously as practicable but in no event later than during the first regularly scheduled shutdown of each affected unit which commences after January 1, 1982. For the purpose of this section, a scheduled shutdown shall be of six weeks or more duration and scheduled at least eighteen months in advance of the shutdown. Postponement of a shutdown does not exempt the owner or operator of the system from the requirement to install controls.

(2) In the event that the owner or operator of such utility can demonstrate to the District's Hearing Board that controls on a unit cannot be installed during the first scheduled shutdown because: 1. The control equipment cannot be delivered by the supplier(s) in time for the shutdown; or 2. The amount of time required for the installation of equipment would cause the duration of the shutdown to be extended such that the reliability of the system would be jeopardized, then the Hearing Board may extend the date controls must be installed on that unit by not more than two years. Such a variance shall not affect the requirement to install controls on other units.

(3) If this Section IX(e) is found to be invalid or unenforceable, Option 4 as specified in this Rule shall not be available as a method of compliance with the provisions of this Rule.

(f) Requirement for New Permits

Any person operating basic equipment under permit pursuant to this

Rule and who plans to make modifications to that equipment or related control equipment for the purpose of reducing oxides of nitrogen emission as required by this Rule, shall apply for new permits to construct or operate both basic and control equipment involved in such reductions regardless of whether modifications or additions are to be made to either basic or control equipment or both.

Existing permits to operate pertaining to the basic and control equipment as specified above shall be surrendered and cancelled when such new permits to operate are issued. New permits shall not be effective unless surrender of such existing permits is made.

(g) Right to Petition for Variance

At any time after January 1, 1982, the owner or operator may petition the Air Resources Board to amend the requirements of this rule based upon circumstances which have changed since the date of adoption of this rule, including, but not by any way of limitation, the following:

(1) The cost-effectiveness or technical feasibility of emission control equipment contemplated in any control plan submitted pursuant to this rule.

(2) The effect of power plant NOx emission on federal and state ambient air quality standards and the cost-effectiveness of power plant NOx reductions to achieve or maintain such ambient air quality standards.

(3) Federal or state laws, rules, regulations, or policy affecting the utilization of gas or oil as power plant fuel.

State of California
AIR RESOURCES BOARD

Response to Environmental Issues Raised

ITEM: Adoption of Amendments to Rule 475.1 of the South Coast Air Quality Management District and Rule 59.1 of the Ventura County Air Pollution Control District which Control the Emissions of Oxides of Nitrogen from Power Plants

Public Hearing Date: March 27, 1980
Response Date; March 27, 1980
Issuing Authority: Air Resources Board

COMMENT: Efforts to control ozone in the South Coast Air Shed may be adversely impacted by further controls upon emissions of nitrogen oxides and the relative contribution of nitrogen oxides from power plants is extremely small. (The Southern California Edison Company).

RESPONSE: The air quality impacts of controlling emissions of oxides of nitrogen are not a significant environmental issue related to the proposed action. The Board thoroughly examined and considered the air quality need before adopting the existing Rules 495.1 and 59.1 of the South Coast Air Quality Management District and Ventura County, respectively, on August 7, 1978 and May 24, 1979. At those times the Board found that such rules were needed to meet air quality standards and hence would have a positive environmental effect. At this hearing the matter before the Board is the revision to the existing rules to make them more compatible with recent findings on control techniques and to allow for the reduction of fossil fuel burning within the South Coast Air Shed as a way of reducing emissions to comply with the rules. The proposed revisions do not significantly change the air quality impacts of the existing rules. Therefore, the air quality information submitted by Edison

State of California

Memorandum

To : Huey D. Johnson
Secretary
RESOURCES AGENCY

Date : April 14, 1980

Subject: Filing of Notice of Decision of the Air Resources Board

From : Air Resources Board

Pursuant to Title 17, Section 60007(b) and in compliance with Air Resources Board certification under section 21080.5 of the Public Resources Code, the Air Resources Board hereby forwards for posting the attached notice of decision and response to environmental comments raised during the comment period.

Sally Rump
BOARD SECRETARY

Attachments:
Resolution 80-22
[redacted]

State of California
AIR RESOURCES BOARD

Resolution 80-23

March 27, 1980

WHEREAS, the Air Resources Board (the "Board") in Resolution 79-49, May 29, 1979, adopted Rule 59.1 for the Ventura County Air Pollution Control District; and

WHEREAS, Rule 59.1 is complementary to Rule 475.1 of the South Coast Air Quality Management District in that one of the utility companies subject to both rules has power plants in both districts and the emissions from the power plants are controlled systemwide. Therefore both rules must contain substantially identical provisions; and

WHEREAS, the Board in Resolution 80-22, dated March 27, 1980, rescinded Rule 475.1 of the South Coast Air Quality Management District and replaced it with Rule 1135.1, which is in certain respects substantially different from Rule 475.1; and

WHEREAS, Rule 59.1 of the Ventura County Air Pollution Control District must now be changed to contain complementary provisions to those of Rule 1135.1 of the South Coast Air Quality Management District; and

WHEREAS, the Board originally adopted Rule 59.1 in response to a request from the Ventura County Board of Supervisors, and representatives of the County have expressed the desire that the Board at this time consider further revisions to the Rule; and

WHEREAS, Health and Safety Code Section 39605 authorizes the Board to provide any assistance to any district; and

WHEREAS, Sections 110(a)(2) and 172(a)(1) of the Clean Air Act require that a state implementation plan provide for the attainment of national ambient air quality standards in any nonattainment area as expeditiously as practicable; and

WHEREAS, a commitment was made in the Ventura County Air Pollution Control District's nonattainment plan to reduce emissions of oxides of nitrogen by means of the measures contained in the Rule adopted by this Resolution; and

WHEREAS, the staffs of the Ventura County Air Pollution Control District and the Board have worked together to develop amendments that are satisfactory to the staff of the Ventura County Air Pollution Control District; and

RECEIVED
Office of the Secretary
APR 15 1980
Resources Agency of California

I certify that this is a correct copy of this document on file in this office.

Norman E. Hill
Assistant Secretary

State of California
AIR RESOURCES BOARD

Response to Environmental Issues Raised

ITEM: Adoption of Amendments to Rule 475.1 of the South Coast Air Quality Management District and Rule 59.1 of the Ventura County Air Pollution Control District which Control the Emissions of Oxides of Nitrogen from Power Plants

Public Hearing Date: March 27, 1980
Response Date: March 27, 1980
Issuing Authority: Air Resources Board

COMMENT: Efforts to control ozone in the South Coast Air Shed may be adversely impacted by further controls upon emissions of nitrogen oxides and the relative contribution of nitrogen oxides from power plants is extremely small. (The Southern California Edison Company).

RESPONSE: The air quality impacts of controlling emissions of oxides of nitrogen are not a significant environmental issue related to the proposed action. The Board thoroughly examined and considered the air quality need before adopting the existing Rules 495.1 and 59.1 of the South Coast Air Quality Management District and Ventura County, respectively, on August 7, 1978 and May 24, 1979. At those times the Board found that such rules were needed to meet air quality standards and hence would have a positive environmental effect. At this hearing the matter before the Board is the revision to the existing rules to make them more compatible with recent findings on control techniques and to allow for the reduction of fossil fuel burning within the South Coast Air Shed as a way of reducing emissions to comply with the rules. The proposed revisions do not significantly change the air quality impacts of the existing rules. Therefore, the air quality information submitted by Edison

RECEIVED
Office of the Secretary
APR 15 1980
Resources Agency of California

I certify that this is a correct copy
of the document on file in this office.
Norman E. Hill Assistant Secretary

State of California

Memorandum

To : Huey D. Johnson
Secretary
RESOURCES AGENCY

Date : April 14, 1980

Subject: Filing of Notice of Decision of the Air Resources Board

From : Air Resources Board

Pursuant to Title 17, Section 60007(b) and in compliance with Air Resources Board certification under section 21080.5 of the Public Resources Code, the Air Resources Board hereby forwards for posting the attached notice of decision and response to environmental comments raised during the comment period.

Sally Rump

Sally Rump
BOARD SECRETARY

Attachments:
Resolution 80-22
Resolution 80-23

RECEIVED
Office of the Secretary
APR 15 1980
Resources Agency of California

I certify that this is a correct copy of the document on file in this office.

Thomas E. Hill
Assistant Secretary

State of California
AIR RESOURCES BOARD

Resolution 80-24

May 22, 1980

WHEREAS, Section 39601 of the Health and Safety Code authorizes the Air Resources Board to adopt standards, rules, and regulations necessary for the proper execution of the powers and duties granted to and imposed upon the Board by law;

WHEREAS, Sections 43101 and 43104 of the Health and Safety Code authorize the Board to adopt vehicle emission standards and test procedures in order to control or eliminate air pollution caused by motor vehicles;

WHEREAS, the Environmental Protection Agency recently promulgated new heavy-duty engine gaseous emission regulations to be implemented beginning in 1984 based upon transient test cycle procedures;

WHEREAS, the heavy-duty engine manufacturers are preparing to make substantial changes to their testing facilities in order to comply with the new federal heavy-duty emission regulations;

WHEREAS, the manufacturers' facilities changeover activities may result in reduced capacity to certify a complete line of heavy-duty engines for California in 1983;

WHEREAS, extending the 1980 heavy-duty emission standards to include 1983 would reduce the manufacturers' burden during the transition period and would avoid adversely affecting California heavy-duty truck sales;

WHEREAS, the California Environmental Quality Act and Board regulations require that no project having adverse environmental impacts be adopted as originally proposed if feasible alternatives or mitigation measures are available;

WHEREAS, the Board finds that the 1980 California certified heavy-duty engine families are on the average close to meeting the more stringent 1983 standards based on actual certification data;

WHEREAS, the Board has quantified the air quality impacts of the proposed action and finds that such impacts are minimal and that feasible mitigation measures are not available;

WHEREAS, the Board finds that the proposed standards are more stringent than applicable federal standards;

WHEREAS, the Board finds that imposition of currently adopted 1983 heavy-duty standards would result in a one model year recertification and therefore would not be cost effective;

WHEREAS, a public hearing and other administrative proceedings have been held in accordance with the provisions of the Administrative Procedure Act (Government Code, Title 2, Division 3, Part 1, Chapter 4.5);

NOW, THEREFORE, BE IT RESOLVED, that the Board hereby amends Section 1956.7, Article 2, Subchapter 1, Chapter 3 of Title 13, California Administrative Code as follows:

Amend Subsection (a) to read:

(a) The exhaust emissions from new 1981 and subsequent model heavy-duty engines, except engines used in medium-duty vehicles, shall not exceed:

Exhaust Emissions Standards
(grams per brake-horsepower-hour)

Model Year	Hydrocarbons	Carbon Monoxide	Hydrocarbons plus Oxides of Nitrogen (NOx)
1981-1983	1.0	25	6.0
OR*		25	5
~~1982~~	~~1.0~~	~~25~~	~~6.0~~
~~OR*~~		~~25~~	~~5~~
~~1983~~ 1984 and subsequent	0.5	25	4.5

*The two sets of standards for each model year are alternatives. A manufacturer has this option for each engine family of showing compliance with either set. Separate deterioration factors shall be established, where applicable, for HC, CO, NOx and/or the combined emissions of HC and NOx.

BE IT FURTHER RESOLVED, that the Board hereby adopts the "California Exhaust Emission Standards and Test Procedures for 1982 and Subsequent Model Heavy-Duty Engines and Vehicles," adopted October 5, 1976, amended April 23, 1980, and as last amended May 22, 1980.

BE IT FURTHER RESOLVED, that the Board hereby determines that the exhaust emission standards adopted herein are, in the aggregate, at least as protective of public health and welfare as applicable federal standards.

I certify that the above is a true and correct copy of Resolution 80-24 as passed by the Air Resources Board.

Diana R. Perrin
For Board Secretary

-State of California

Memorandum

To : Huey D. Johnson
Secretary
Resources Agency

Date : June 6, 1980

Subject: Filing of Notice of Decision of the Air Resources Board

From : **Air Resources Board**

Pursuant to Title 17, Section 60007(b), and in compliance with Air Resources Board certification under Section 21080.5 of the Public Resources Code, the Air Resources Board hereby forwards for posting the attached notice of decision and response to environmental comments raised during the comment period.

Diana P. Pencin

Diana Pencin
Acting Board Secretary

Attachments
Resolution 80-24

State of California
AIR RESOURCES BOARD

Response to Significant Environmental Issues

Item: Extension of California's 1980 Heavy-Duty Engine and Vehicle Exhaust Emission Standards Through the 1983 Model Year.

Public Hearing Date: May 22, 1980

Response Date: May 22, 1980

Issuing Authority: Air Resources Board

Comment: None raised.

Response: None

CERTIFIED: Diana P Perrin
for Board Secretary

Date: June 6, 1980

State of California
AIR RESOURCES BOARD

Resolution No. 80-25

April 24, 1980

WHEREAS, the Air Resources Board ("Board") believes that its relations with elected officials of local, state, and regional agencies are important in addressing California's air quality concerns;

WHEREAS, the Board finds that planning programs need to be consistent and well-defined among local, state, and regional agencies and must be monitored and supported within each locality;

THEREFORE BE IT RESOLVED, the Board supports the desire of local, state, and regional agencies to strengthen their partnership with the Board in environmental management;

BE IT FURTHER RESOLVED, the Board encourages and supports the above participation of local, state, and regional agencies in the planning process and in the preparation of the State/EPA Agreement for Fiscal Year 1981 to insure that local and regional priorities will be considered.

BE IT FURTHER RESOLVED, the Board supports the concept of a Memorandum of Understanding among local, state, and regional agencies, if appropriate, to implement portions of the State/EPA agreement for Fiscal Year 1981;

BE IT FURTHER RESOLVED, the Board intends to work closely with local, state, and regional agencies in order to accomplish these goals.

I certify that the above is a true and correct copy of Resolution 80-25 as passed by the Air Resources Board.

Sally Rump

Sally Rump, Board Secretary

May 8, 1980

State of California

Memorandum

To : Huey D. Johnson
Secretary
Resources Agency

Date : May 8, 1980

Subject: Filing of Notice of Decision of the Air Resources Board

From : Air Resources Board

Pursuant to Title 17, Section 60007(b), and in compliance with Air Resources Board certification under section 21080.5 of the Public Resources Code, the Air Resources Board hereby forwards for posting the attached notice of decision and response to environmental comments raised during the comment period.

Sally Rump

Sally Rump
BOARD SECRETARY

attachments
Resolution 80-6
Resolution 80-8
Resolution 80-10

State of California
AIR RESOURCES BOARD

Response to Significant Environmental Issues

Item: Consideration of Resolution Regarding the Relationship between the Air Resources Board and Local Governments and their Regional Agencies in Efforts to Improve California's Air Quality

Public Hearing Date: April 24, 1980

Response Date: April 24, 1980

Issuing Authority: Air Resources Board

Comment: N/A

Response: N/A

CERTIFIED: Sally Rump
Sally Rump
Board Secretary

Date: April 30, 1980

State of California
AIR RESOURCES BOARD

Resolution 80-26

June 26, 1980

WHEREAS, Section 39601 of the Health and Safety Code authorizes the Air Resources Board to adopt standards, rules, and regulations necessary for the proper execution of the powers and duties granted to and imposed upon the Board by law.

WHEREAS, Sections 43101 and 43107 of the Health and Safety Code authorize the Board to adopt vehicle emission standards and test procedures for new motor vehicles, including motorcycles, in order to control or eliminate the air pollution caused by such vehicles.

WHEREAS, Section 43824, of the Health and Safety Code, authorizes the Board to adopt, by regulation, evaporative emission standards and test procedures for new motor vehicles in the absence of any such federal regulations.

WHEREAS, Section 39605 of the Health and Safety Code authorizes the Board to hold public hearings to carry out Division 26 of the Health and Safety Code which relates to statewide air pollution control.

WHEREAS, California's evaporative emission standards for motorcycles, amended by the Board in October 1979, are 6.0 grams per SHED test for 1983-84 model years and 2.0 grams per SHED test for 1985 and later model years.

WHEREAS, major technical problems have arisen during the manufacturers' programs to develop and certify Class III (280 cc and larger) motorcycles that would meet the evaporative emission standards currently set by the Board.

WHEREAS, the California Environmental Quality Act and Board Regulations require that no project having adverse environmental impacts be adopted as originally proposed if feasible alternatives or mitigation measures are available.

WHEREAS, the Board finds that a one year extension on both the 1983 and the 1985 motorcycle evaporative emission standards for Class III motorcycles will not have an adverse effect on air quality statewide and it will not require any alternatives or mitigation.

WHEREAS, the Board finds that even with the proposed extension, the evaporative emission standards will remain more stringent than federal standards.

RECEIVED BY
Office of the Secretary

JUL 01 1980

Resources Agency of California

WHEREAS, a public hearing and other administrative proceedings have been held in accordance with the provisions of the Administrative Procedure Act (Government Code, Title 2, Division 3, Part 1 Chapter 4.5);

Now, THEREFORE, BE IT RESOLVED, that the Board hereby amends Section 1976, Article 2, Subchapter 1, Chapter 3 of Title 13 California Administrative Code as follows:

Amend Section 1976 (b) to read:

(b) Evaporative emissions for gasoline-powered motor vehicles shall not exceed:

Vehicle Type	Model Year	Hydrocarbons (grams per test)
Passenger cars Light-duty trucks Medium-duty vehicles Heavy-duty vehicles	1978 and 1979	6.0
Passenger cars Light-duty trucks Medium-duty vehicles Heavy-duty vehicles	1980 and subsequent	2.0
~~motorcycles~~	~~1983 and 1984~~	~~6.0~~
~~motorcycles~~	~~1985 and subsequent~~	~~2.0~~
Motorcycles		
Class I and II (50-279 cc)	1983 and 1984 1985 and subsequent	6.0 2.0
Class III (280 cc and larger)	1984 and 1985 1986 and subsequent	6.0 2.0

The standards set forth above shall apply only to those gasoline-powered motor vehicles which are subject to exhaust emission standards under this Article.

NOTE: Authority cited: Health and Safety Code Sections 39600, 39601. Reference: Health and Safety Code Sections 43100, 43101, 43104, 43107, 43824.

Adopt a new Section 1976 (c) to read:

(c) The procedure for determining compliance with these standards is set forth in the "California Evaporative Emission Standards and Test Procedures for 1978 and Subsequent Model Gasoline-Powered Motor Vehicles," adopted by the Air Resources Board on April 16, 1975, as last amended June 26, 1980.

NOTE: Authority cited: Health and Safety Code Sections 39600, 39601
Reference: Health and Safety Code Sections 43100, 43101, 43104, 43107, 43824.

BE IT FURTHER RESOLVED, that the Board hereby adopts the "California Evaporative Emission Standards and Test Procedures for 1978 and Subsequent Model Gasoline Powered Vehicles" dated June 26, 1980.

BE IT FURTHER RESOLVED, that the Board thereby determines that the exhaust emission standards adopted herein are, in the aggregate, at least as protective of public health and welfare as applicable federal standards.

I hereby certify that the above is a true and correct copy of Resolution 80-26, as passed by the Air Resources Board.

Sally Rump

Sally Rump
Board Secretary

State of California

Memorandum

To : Huey D. Johnson
Secretary
Resources Agency
1416 - 9th Street
Sacramento, CA 95814

Date : July 1, 1980

Subject: Filing of Notice of Decision of the Air Resources Board

From : Air Resources Board

Pursuant to Title 17, Section 60007(b), and in compliance with Air Resources Board certification under section 21080.5 of the Public Resources Code, the Air Resources Board hereby forwards for posting the attached notice of decision and response to environmental comments raised during the comment period.

Sally Rump

Sally Rump
Board Secretary

attachments
Resolution 80-45

State of California

AIR RESOURCES BOARD

Response to Significant Environmental Issues

Item: Amendments to Title 13, California Administrative Code, regarding the extension of the compliance date for class three motorcycles with the Evaporative Emission Standard. (Board Item 80-12-1).

Public Hearing Date: June 26, 1980

Response Date: June 26, 1980

Issuing Authority: Air Resources Board

Comment: No comment was received.

Response: N/A

CERTIFIED: Sally Rumpf
Board Secretary

Date: June 30, 1980

RECEIVED BY
Office of the Secretary
JUL 01 1980
Resources Agency of California

State of California
AIR RESOURCES BOARD

Resolution 80-27

June 26, 1980

WHEREAS, Sections 39600 and 39601 of the Health and Safety Code authorize the Air Resources Board (ARB) to adopt standards, rules and regulations necessary for the proper execution of the powers and duties granted to and imposed upon the Board by law;

WHEREAS, Section 43830 of the Health and Safety Code directs the ARB to establish maximum standards for the volatility of gasoline at nine pounds per square inch Reid vapor pressure (RVP) as determined by the American Society for Testing and Materials (ASTM) test Method D 323-58 or by an appropriate test determined by the ARB;

WHEREAS, Section 2251 of Title 13 of the California Administrative Code, entitled Reid Vapor Pressure of Gasoline, has previously been promulgated in accordance with the provisions of the Health and Safety Code and provides that RVP be determined in accordance with ASTM Method D 323-58;

WHEREAS, paragraph 4(b) of the RVP test method, ASTM Method D 323-58, states that sampling shall be done in accordance with ASTM Method D 270, entitled Standard Method of Sampling Petroleum and Petroleum Products;

WHEREAS, ASTM Method D 270 provides specific sampling procedures for obtaining gasoline samples under certain circumstances but, paragraph 7.1 of this method states that directions for sampling cannot be made explicit enough to cover all cases;

WHEREAS, the staff of the ARB determined that enforcement of Section 43830 of the Health and Safety Code requires taking gasoline samples at the point of sale or supply to motor vehicles and therefore employed a form of tap or continuous sampling during its inspection program during August 1977;

WHEREAS, sales of gasoline with a RVP greater than nine pounds per square inch were documented in August 1977 and complaints were filed against oil companies found to be selling such gasoline; and a lawsuit filed against Mobil Oil Corporation was brought to trial and heard in the Los Angeles Superior Court by Judge Max Wisot and the court's decision stated that the staff of the ARB did not strictly follow ASTM Method D 270 since in the court's opinion the bottle sampling method should have been utilized;

WHEREAS, the bottle sampling method specified in ASTM D 270 is infeasible as an enforcement tool to sample gasoline in underground storage tanks at service stations;

WHEREAS, the ARB has determined that as a result of the potential confusion stemming from the litigation arising from the August 1977 inspection, a specific regulation on obtaining gasoline samples from service station pump nozzles would provide useful clarification of the applicable test procedures;

WHEREAS, Section 43830 of the Health and Safety Code directs that the ARB has the option to establish an appropriate test method to determine the volatility of the gasoline sold in this state;

WHEREAS, the Board finds that Section 2251 as amended and Section 2261 of Title 17, California Administrative Code, are an appropriate test to determine the Reid vapor pressure of gasoline sold in this state; and

WHEREAS, notice of a public hearing to consider the proposed amendments to the RVP of Gasoline regulation and the proposed adoption of a gasoline sampling procedure for the purpose of vapor pressure testing has been given and a public hearing held in accordance with the provisions of the Health and Safety Code and the Administrative Procedure Act (Government Code Section 11371 et seq);

WHEREAS, it is necessary that the changes to regulations contained in Title 13, California Administrative Code, become effective as soon as possible after their adoption so that they will apply to the Board's enforcement of regulatory and statutory provisions governing the volatility of gasoline in the summer months of this year when air pollution problems are at their worst;

NOW, THEREFORE, BE IT RESOLVED that the Board amends Section 2251 and adopts Section 2261 of Subchapter 5, Chapter 3, Title 13, California Administrative Code, as set forth in the attachment hereto, as the test to determine the Reid vapor pressure of gasoline sold in this state;

BE IT FURTHER RESOLVED that the Board directs the Executive Officer to file with the Secretary of State the regulations adopted herein to become effective as soon as possible;

BE IT FURTHER RESOLVED that the ARB delegates to the Executive Officer of the ARB the authority to make further changes to the vapor pressure test and/or sampling methods for gasoline sold in this state based on suitable scientific and/or technical evidence; and

BE IT FURTHER RESOLVED that notwithstanding the amendments to Section 2251 and the addition of Section 2261, Title 17, California Administrative Code, adopted June 26, 1980, the provisions of Section 2251 as they existed prior to the effective date of these amendments shall continue to be operative and effective with respect to the sale or supply of fuel for motor vehicles prior to the effective date of said amendments.

I certify that the above is a true
and correct copy of Resolution 80-27
as adopted by the Air Resources Board.

Sally Rump

Sally Rump
Board Secretary

FOR FILING ADMINISTRATIVE REGULATIONS
WITH THE SECRETARY OF STATE
(Pursuant to Government Code Section 11380.1)

Copy below is hereby certified to be a true and correct copy of regulations adopted, or amended, or an order of repeal by:

Air Resources Board
(Agency)

Date of adoption, amendment, or repeal:

June 26, 1980

By: [signature]

Executive Officer
(Title)

DO NOT WRITE IN THIS SPACE

DO NOT WRITE IN THIS SPACE

The attached regulations which are being adopted, amended or repealed are contained in Title 13 of the California Administrative Code.

(Optional): Division, Part, Chapter, etc., affected by this order:

(Check as applicable)
FILED BY ORDER:

X Emergency
___ Certificate of Compliance
___ Certificate of Non-Compliance
___ Regular
___ Procedural and Organizational

(Check One:)
EFFECTIVE DATE:

X On filing with Secretary of State
___ On _____ (designated effective date)
___ On _____ as specified by Statutes
___ On 30th day after filing

(Check all)
CHECKLIST OF MANDATORY REQUIREMENTS

X Eight copies of order or Certificate attached.
X Original signature on at least one copy.
X Regulation Summary (Form 399 or equivalent) attached (1 copy).
X Publication date (Regulatory Register) of notice for attached order or Certificate of Compliance is 5/7/80.
X Authority and reference citation placed beneath each section in attached order.

(Check one:)
REIMBURSABLE COSTS:

X These are "no cost" regulations under Revenue and Taxation Code Section 2231, and State Administrative Manual Section 6052.1.
___ These are "disclaimible cost" regulations under Revenue and Taxation Code Section 2231. A clarifying disclaimer statement is attached, pursuant to State Administrative Manual Section 6052.2.
___ These are "cost" regulations under Revenue and Taxation Code Section 2231. This agency has followed the provisions of State Administrative Manual Section 6052.3.

(Check one:)
COSTS/SAVINGS TO LOCAL, STATE AND FEDERAL GOVERNMENT

X These regulations involve no costs or savings to local, state or federal government under Government Code Section 11421.
___ These regulations do involve costs or savings to local, state or federal government under Government Code Section 11421. An estimate of these costs or savings is attached to this order.

(Check one:)
BUILDING STANDARDS

X These regulations contain no building standards under Health and Safety Code Sections 18909-18915.
___ These regulations do contain building standards under Health and Safety Code Sections 18909-18915. The date of approval by the Building Standards Commission is _____

(Check one if attached are Conflict of Interest Regulations)
CONFLICT OF INTEREST

The attached Conflict of Interest Regulations contain the FPPC approval stamp and;

___ Are to be published in full in the Administrative Code.
___ Are to be codified by appropriate reference in the Administrative Code, and include a statement as to where the full text may be obtained.

(Check if emergency campaign disclosure regulations)
CAMPAIGN DISCLOSURE

___ These are emergency regulations pertaining to campaign disclosure law and were adopted by unanimous vote of all Board or Commission members present at the regulation adoption proceeding.

COMPLETE REVERSE SIDE IF WHEN ARE EMERGENCY REGULATIONS

orders are necessary for the immediate preservation of the public peace, health and safety or general welfare. The specific facts constituting the need for immediate action are: (attach continuation sheet, if necessary)

(check if applicable:)

These emergency regulations a readoption of a previous emergency order which has not yet been certi or it is substantially equivalent previous emergency order which has yet been certified. Approval Governor was obtained on:

It is necessary that the changes to regulations contained in Title 13, California Administrative Code, become effective as soon as possible after their adoption so that they will apply to the Board's enforcement of regulatory and statutory provisions governing the volatility of gasoline in the summer months of this year when air pollution problems are at their worst.

The blanket citation of authority and reference for this emergency action is:
Authority: Sections 39600, 39601, Health and Safety Code
Reference: Section 43830, Health and Safety Code

The name and phone number of the agency officer to whom inquiries about the emergency order may be directed are:

NAME James J. Morgester Phone (916) 322-6022

(Complete one:)

X These regulations involve no costs or savings to local, state or federal government under Government Code Section 11421.

____ These regulations do involve costs or savings to local, state or federal government under Government Code Section 11421. An estimate of those costs or savings is attached to this order.

(Complete one:)

X To fulfill Government Code S 11421, attached is an inform digest, providing a clear an concise summary of existing and regulations, if any, rel directly to the proposed act and the effect of the pr action.

____ To fulfill Government Code S tion 11421, express terms of emergency are attached.

Repeal Subchapter 5, Section 2251 in Title 13, California Administrative Code.

NOTE: Authority cited: §§ 39600 and 39601 Health and Safety Code. Reference: § 43830 Health and Safety Code.

Adopt Subchapter 5, Article 1, Section 2251 and Article 2, Section 2261 in Title 13, California Administrative Code.

Subchapter 5. Standards for Motor Vehicle Fuels

Article 1. Standards

2251. Reid Vapor Pressure for Gasoline. No person shall sell or supply as a fuel for motor vehicles as defined by the Vehicle Code of the State of California a gasoline having a Reid vapor pressure greater than nine pounds per square inch as sampled pursuant to Section 2261 and tested by ASTM Method D 323-58, deleting paragraph 4(b) concerning sampling, beginning in 1971 in the following air basins established by the State Air Resources Board.

(a) April 1 through October 31:

South Coast Air Basin (as defined on January 1, 1976).

Southeast Desert Air Basin

(b) May 1 through September 30:

Great Basin Valley Air Basin

(c) May 1 through October 31:

San Francisco Bay Area Air Basin

San Diego Air Basin

Sacramento Valley Air Basin

DO NOT WRITE IN THIS SPACE

DO NOT WRITE IN THIS SPACE

San Joaquin Valley Air Basin

Mountain Counties Air Basin

Lake Tahoe Air Basin

(d) June 1 through September 30:

North Coast Air Basin

Lake County Air Basin

(e) June 1 through October 31:

North Central Coast Air Basin

South Central Coast Air Basin (as defined on January 1, 1976).

This section shall not be applicable to gasoline delivered to retail outlets more than 14 days immediately preceding the periods set forth for each basin herein. Notwithstanding the amendments to this section adopted June 26, 1980, the provisions of this section as they existed prior to the effective date of these amendments shall continue to be operative and effective with respect to the sale or supply of fuel for motor vehicles prior to the effective date of said amendments.

NOTE: Authority cited: §§ 39600 and 39601 Health and Safety Code. Reference: § 43830 Health and Safety Code.

STD. 400A (8-71)

CONTINUATION SHEET
FOR FILING ADMINISTRATIVE REGULATIONS
WITH THE SECRETARY OF STATE
(Pursuant to Government Code Section 11380.1)

Adopt Section 2261 in Title 13, California Administrative Code.

Article 2. Sampling and Testing Procedures

2261. Gasoline Sampling Procedures for Reid Vapor Pressure. (a) "Scope." This method covers procedures for obtaining representative samples of gasoline for motor vehicles pursuant to Section 2251 for the purpose of testing for Reid vapor pressure (RVP).

(b) "Summary of method." It is necessary that the samples be truly representative of the gasoline in question. The precautions required to ensure the representative character of the samples are numerous and depend upon the tank, carrier, container or line from which the sample is being obtained, the type and cleanliness of the sample container, and the sampling procedure that is to be used. A summary of the sampling procedures and their application is presented in Table 1. Each procedure is suitable for sampling a material under definite storage, transportation, or container conditions. The basic principle of each procedure is to obtain a sample in such manner and from such locations in the tank or other container that the sample will be truly representative of the gasoline.

(c) "Description of terms."

(1) "Average sample" is one that consists of proportionate parts from all sections of the container.

DO NOT WRITE IN THIS SPACE

STD. 400A (8-71)
CONTINUATION SHEET
FOR FILING ADMINISTRATIVE REGULATIONS
WITH THE SECRETARY OF STATE
(Pursuant to Government Code Section 11380.1)

DO NOT WRITE IN THIS SPACE

(2) "All-levels sample" is one obtained by submerging a stoppered beaker or bottle to a point as near as possible to the draw-off level, then opening the sampler and raising it at a rate such that it is about 3/4 full (maximum 85 percent) as it emerges from the liquid. An all-levels sample is not necessarily an average sample because the tank volume may not be proportional to the depth and because the operator may not be able to raise the sampler at the variable rate required for proportionate filling. The rate of filling is proportional to the square root of the depth of immersion.

(3) "Running sample" is one obtained by lowering an unstoppered beaker or bottle from the top of the gasoline to the level of the bottom of the outlet connection or swing line, and returning it to the top of the gasoline at a uniform rate of speed such that the beaker or bottle is about 3/4 full when withdrawn from the gasoline.

(4) "Spot sample" is one obtained at some specific location in the tank by means of a thief bottle, or beaker.

(5) "Top sample" is a spot sample obtained 6 inches (150 mm) below the top surface of the liquid (Figure 1).

(6) "Upper sample" is a spot sample taken at the mid-point of the upper third of the tank contents (Figure 1).

(7) "Middle sample" is a spot sample obtained from the middle of the tank contents (Figure 1).

(8) "Lower sample" is a spot sample obtained at the level of the fixed tank outlet or the swing line outlet (Figure 1).

(9) "Clearance sample" is a spot sample taken 4 inches (100 mm) below the level of the tank outlet (Figure 1).

(10) "Bottom sample" is one obtained from the material on the bottom surface of the tank, container, or line at its lowest point.

(11) "Drain sample" is one obtained from the draw-off or discharge valve. Occasionally, a drain sample may be the same as a bottom sample, as in the case of a tank car.

(12) "Continuous sample" is one obtained from a pipeline in such manner as to give a representative average of a moving stream.

(13) "Mixed sample" is one obtained after mixing or vigorously stirring the contents of the original container, and then pouring out or drawing off the quantity desired.

(14) "Nozzle sample" is one obtained from a gasoline service station pump nozzle which dispenses gasoline from an underground storage tank.

(d) "Sample containers."

DO NOT WRITE IN THIS SPACE

DO NOT WRITE IN THIS SPACE

(1) Sample containers may be clear or brown glass bottles, or cans. The clear glass bottle is advantageous because it may be examined visually for cleanliness, and also allows visual inspection of the sample for free water or solid impurities. The brown glass bottle affords some protection from light. The only cans permissible are those with the seams soldered on the exterior surface with a flux of rosin in a suitable solvent. Such a flux is easily removed with gasoline, whereas many others are very difficult to remove.

(2) "Container closure." Cork or glass stoppers, or screw caps of plastic or metal, may be used for glass bottles; screw caps only shall be used for cans to provide a vapor-tight closure seal. Corks must be of good quality, clean and free from holes and loose bits of cork. Never use rubber stoppers. Contact of the sample with the cork may be prevented by wrapping tin or aluminum foil around the cork before forcing it into the bottle. Glass stoppers must be a perfect fit. Screw caps must be protected by a cork disk faced with tin or aluminum foil, or other material that will not affect petroleum or petroleum products.

(3) "Cleaning procedure." All sample containers must be absolutely clean and free of water, dirt, lint, washing compounds, naphtha, or other solvents, soldering fluxes or acids, corrosion, rust, and oil. Before using

STD. 400A (6-71)
CONTINUATION SHEET
FOR FILING ADMINISTRATIVE REGULATIONS
WITH THE SECRETARY OF STATE
(Pursuant to Government Code Section 11380.1)

a container, rinse it with Stoddard solvent or other naphtha of similar volatility. (It may be necessary to use sludge solvents to remove all traces of sediment and sludge from containers previously used.) Then wash the container with strong soap solution, rinse it thorougly with tap water, and finally with distilled water. Dry either by passing a current of clean, warm air through the container or by placing it in a hot dust-free cabinet at 104 degrees Fahrenheit (40 degrees centigrade) or higher. When dry, stopper or cap the container immediately.

(e) "Sampling apparatus" is described in detail under each of the specific sampling procedures. Clean, dry, and free all sampling apparatus from any substance that might contaminate the material, using the procedure described in (d)(3).

(f) "Time and place of sampling." When loading or discharging gasoline, take samples from both shipping and receiving tanks, and from the pipeline if required.

(1) "Ship or barge tanks." Sample each product after the vessel is loaded or just before unloading.

(2) "Tank cars." Sample the product after the car is loaded or just before unloading.

NOTE: When taking samples from tanks suspected of containing flammable atmospheres, precautions should be taken to guard against ignitions due to static electricity. Metal or conductive objects, such as gage

DO NOT WRITE IN THIS SPACE

STD. 400A (6-71)

CONTINUATION SHEET
FOR FILING ADMINISTRATIVE REGULATIONS
WITH THE SECRETARY OF STATE
(Pursuant to Government Code Section 11380.1)

tapes, sample containers, and thermometers, should not be lowered into or suspended in a compartment or tank which is being filled or immediately after cessation of pumping. A waiting period of approximately one minute will generally permit a substantial relaxation of the electrostatic charge; under certain conditions a longer period may be deemed advisible.

(g) "Obtaining samples."

(1) Directions for sampling cannot be made explicit enough to cover all cases. Extreme care and good judgment are necessary to ensure samples that represent the general character and average condition of the material. Clean hands are important. Clean gloves may be worn but only when absolutely necessary, such as in cold weather, or when handling materials at high temperature, or for reasons of safety. Select wiping cloths so that lint is not introduced, contaminating samples.

(2) As many petroleum vapors are toxic and flammable, avoid breathing them or igniting them from an open flame or a spark produced by static.

(3) When sampling relatively volatile products (more than 2 pounds (0.14 kgf/cm^2) RVP), the sampling apparatus shall be filled and allowed to drain before drawing the sample. If the sample is to be transferred to another container, this container shall also be rinsed with some of the volatile product and then drained. When the actual sample is emptied into this container, the sampling apparatus should be upended

DO NOT WRITE IN THIS SPACE

STD. 400A (8-71)

CONTINUATION SHEET
FOR FILING ADMINISTRATIVE REGULATIONS
WITH THE SECRETARY OF STATE
(Pursuant to Government Code Section 11380.1)

into the opening of the sample container and remain in this position until the contents have been transferred so that no unsaturated air will be entrained in the transfer of the sample.

(h) "Handling samples."

(1) "Volatile samples." It is necessary to protect all volatile samples of gasoline from evaporation. Transfer the product from the sampling apparatus to the sample container immediately. Keep the container closed except when the material is being transferred. When samples of more than 16 pounds (1.12 kgf/cm^2) RVP are being obtained, be sure to use containers strong enough to meet local safety regulations. After delivery to the laboratory, volatile samples should be cooled before the container is opened.

(2) "Container outage." Never completely fill a sample container, but allow adequate room for expansion, taking into consideration the temperature of the liquid at the time of filling and the probable maximum temperature to which the filled container may be subjected.

(i) "Shipping samples." To prevent loss of liquid and vapors during shipment, and to protect against moisture and dust, cover the stoppers of glass bottles with plastic caps that have been swelled in water, wiped dry, placed over the tops of the stoppered bottles, and allowed to shrink tightly in place. The

DO NOT WRITE IN THIS SPACE

caps of metal containers must be screwed down tightly and checked for leakage. Postal and express office regulations applying to the shipment of flammable liquids must be observed.

(j) "Labeling sample containers."

(1) Label the container immediately after a sample is obtained. Use waterproof and oilproof ink or a pencil hard enough to dent the tag, since soft pencil and ordinary ink markings are subject to obliteration from moisture, oil smearing, and handling. Include the following information:

(A) Date and time (the period elapsed during continuous sampling),

(B) Name of the sample,

(C) Name or number and owner of the vessel, car, or container,

(D) Brand and grade of material, and

(E) Reference symbol or identification number.

(k) "Sampling procedures." The standard sampling procedures described in this method are summarized in Table 1. Alternative sampling procedures may be used if a mutually satisfactory agreement has been reached by the parties involved and such agreement was put in writing and signed by authorized officials.

(1) "Bottle or beaker sampling." The bottle or beaker sampling procedure is applicable for sampling

DO NOT WRITE IN THIS SPACE

liquids of 16 pounds (1.12 kgf/cm^2) RVP or less in tank cars, tank trucks, shore tanks, ship tanks, and barge tanks.

(A) "Apparatus." A suitable sampling bottle or beaker as shown in Figure 2 is required. Recommended diameter of opening in the bottle or beaker is 3/4 inch (19 mm).

(B) "Procedure."

1. "All-levels sample." Lower the weighted, stoppered bottle or beaker as near as possible to the draw-off level, pull out the stopper with a sharp jerk of the cord or chain and raise the bottle at a uniform rate so that it is about 3/4 full as it emerges from the liquid.

2. "Running sample." Lower the unstoppered bottle or beaker as near as possible to the level of the bottom of the outlet connection or swing line and then raise the bottle or beaker to the top of the gasoline at a uniform rate of speed such that it is about 3/4 full when withdrawn from the gasoline.

3. "Upper, middle, and lower samples." Lower the weighted, stoppered bottle to the proper depths (Figure 1) as follows:

Upper sample	middle of upper third of the tank contents
Middle sample	middle of the tank contents
Lower sample	level of the fixed tank outlet or the swing-line outlet

DO NOT WRITE IN THIS SPACE

STD. 400A (8-71)

CONTINUATION SHEET
FOR FILING ADMINISTRATIVE REGULATIONS
WITH THE SECRETARY OF STATE
(Pursuant to Government Code Section 11380.1)

Pull out the stopper with a sharp jerk of the cord or chain and allow the bottle or beaker to fill completely at the selected level, as evidenced by the cessation of air bubbles. When full, raise the bottle or beaker, pour off a small amount, and stopper immediately.

4. "Top sample." Obtain this sample (Figure 1) in the same manner as specified in (j)(1)(B)3. but at 6 inches (150 mm) below the top surface of the tank contents.

5. "Handling." Stopper and label bottle samples immediately after taking them, and deliver to the laboratory in the original sampling bottles.

(2) "Tap sampling." The tap sampling procedure is applicable for sampling liquids of 26 pounds (1.83 kgf/cm^2) RVP or less in tanks which are equipped with suitable sampling taps or lines. This procedure is recommended for volatile stocks in tanks of the breather and balloon roof type, spheroids, etc. (Samples may be taken from the drain cocks of gage glasses, if the tank is not equipped with sampling taps.) The assembly for tap sampling is shown in Figure 3.

(A) "Apparatus."

1. "Tank taps." The tank should be equipped with at least three sampling taps placed equidistant throughout the tank height and extending at least three feet (one m) inside the tank shell. A standard 1/4 inch pipe with suitable valve is satisfactory.

DO NOT WRITE IN THIS SPACE

STD. 400A (8-71)

CONTINUATION SHEET
FOR FILING ADMINISTRATIVE REGULATIONS
WITH THE SECRETARY OF STATE
(Pursuant to Government Code Section 11380.1)

2. "Tube." A delivery tube that will not contaminate the product being sampled and long enough to reach to the bottom of the sample container is required to allow submerged filling. When a cooling bath is used while tap sampling, a similar suitable tube should be used between the tank tap and the cooler inlet.

3. "Sample containers." Use clean, dry glass bottles of convenient size and strength to receive the samples. In some cases, metal containers may be used instead of glass bottles.

(B) "Procedure."

1. Before a sample is drawn, flush the tap (or gage glass drain cock) and line until they are purged completely. Connect the clean delivery tube to the tap. Draw upper, middle, or lower samples directly from the respective taps after the flushing operation. Stopper and label the sample container immediately after filling, and deliver it to the laboratory.

2. When a sample cooler is used during the tap sampling operation, flush the tap (or gage glass drain cock). Then, using a section of clean tubing, connect the tap to the cooler inlet. Flush the cooler thoroughly, after which connect the clean delivery tube to the cooler outlet and proceed with the sampling operation.

DO NOT WRITE IN THIS SPACE

(3) "Continuous sampling." The continuous sampling procedure is applicable for sampling liquids of 16 pounds (1.12 kgf/cm^2) RVP or less and semiliquids in pipelines, filling lines, and transfer lines. The continuous sampling may be done manually or by using automatic devices.

(A) "Apparatus."

1. "Sampling probe." The function of the sampling probe is to withdraw from the flow stream a portion that will be representative of the entire stream. The apparatus assembly for continuous sampling is shown in Figure 4. Probe designs that are commonly used are as follows:

a. A tube extending to the center of the line and beveled at a 45 degree angle facing upstream (Figure 4(a)).

b. A long-radius forged elbow or pipe bend extending to the center line of the pipe and facing upstream. The end of the probe should be reamed to give a sharp entrance edge (Figure 4(b)).

c. A closed-end tube with a round orifice spaced near the closed end which should be positioned in such a way that the orifice is in the center of the pipeline and is facing the stream as shown in Figure 4(c).

2. Since the fluid pumped may not in all cases be homogeneous, the position and size of

DO NOT WRITE IN THIS SPACE

STD. 400A (8-71)

CONTINUATION SHEET
FOR FILING ADMINISTRATIVE REGULATIONS
WITH THE SECRETARY OF STATE
(Pursuant to Government Code Section 11380.1)

the sampling probe should be such as to minimize stratification or dropping out of heavier particles within the tube or the displacement of the product within the tube as a result of variation in gravity of the flowing stream. The sampling probe should be located preferably in a vertical run of pipe and as near as practicable to the point where the product passes to the receiver. The probe should always be in a horizontal position.

a. The sampling lines should be as short as practicable and should be cleared before any samples are taken.

b. A suitable device for mixing the fluid flow to ensure a homogeneous mixture at all rates of flow and to eliminate stratification should be installed upstream of the sampling tap. Some effective devices for obtaining a homogeneous mixture are as follows: Reduction in pipe size; a series of baffles; orifice or perforated plate; and a combination of any of these methods.

c. The design or sizing of these devices is optional with the user, as long as the flow past the sampling point is homogeneous and stratification is eliminated.

3. To control the rate at which the sample is withdrawn, the probe or probes should be fitted with valves or plug cocks.

DO NOT WRITE IN THIS SPACE

DO NOT WRITE IN THIS SPACE

4. "Automatic sampling devices" that meet the standards set out in (3)(A)5. may be used in obtaining samples of gasoline. The quantity of sample collected must be of sufficient size for analysis, and its composition should be identical with the composition of the batch flowing in the line while the sample is being taken. An automatic sampler installation necessarily includes not only the automatic sampling device that extracts the samples from the line, but also a suitable probe, connecting lines, auxiliary equipment, and a container in which the sample is collected. Automatic samplers may be classified as follows:

a. "Continuous sampler, time cycle (nonproportional) types." A sampler designed and operated in such a manner that it transfers equal increments of liquid from the pipeline to the sample container at a uniform rate of one or more increments per minute is a continuous sampler.

b. "Continuous sampler, flow-responsive (proportional) type." A sampler that is designed and operated in such a manner that it will automatically adjust the quantity of sample in proportion to the rate of flow is a flow-responsive (proportional) sampler. Adjustment of the quantity of sample may be made either by varying the frequency of transferring equal increments of sample to the sample container, or by varying the volume of the increments while maintaining

a constant frequency of transferring the increments to the sample container. The apparatus assembly for continuous sampling is shown in Figure 4.

c. "Intermittent sampler." A sampler that is designed and operated in such a manner that it transfers equal increments of liquid from a pipeline to the sample container at a uniform rate of less than one increment per minute is an intermittent sampler.

5. "Standards of installation." Automatic sampler installations should meet all safety requirements in the plant or area where used, and should comply with American National Standard Code for Pressure Piping, and other applicable codes (ANSI B31.1). The sampler should be so installed as to provide ample access space for inspection and maintenance.

a. Small lines connecting various elements of the installation should be so arranged that complete purging of the automatic sampler and of all lines can be accomplished effectively. All fluid remaining in the sampler and the lines from the preceding sampling cycle should be purged immediately before the start of any given sampling operation.

b. In those cases where the sampler design is such that complete purging of the sampling lines and the sampler is not possible, a small pump should be installed in order to circulate a continuous

DO NOT WRITE IN THIS SPACE

stream from the sampling tube past or through the sampler and back into the line. The automatic sampler should then withdraw the sample from the sidestream through the shortest possible connection.

c. Under certain conditions, there may be a tendency for water and heavy particles to drop out in the discharge line from the sampling device and appear in the sample container during some subsequent sampling period. To circumvent this possibility, the discharge pipe from the sampling device should be free of pockets or enlarged pipe areas, and preferably should be pitched downward to the sample container.

d. To ensure clean, free-flowing lines, piping should be designed for periodic cleaning.

6. "Field calibration." Composite samples obtained from the automatic sampler installation should be verified for quantity performance in a manner that meets with the approval of all parties concerned, at least once a month and more often if conditions warrant. In the case of time-cycle samplers, deviations in quantity of the sample taken should not exceed ± five percent for any given setting. In the case of flow-responsive samplers, the deviation in quantity of sample taken per 1,000 barrels of flowing stream should not exceed ± 5 percent. For the purpose of field-calibrating an installation, the composite sample

DO NOT WRITE IN THIS SPACE

STD. 400A (1-71)
CONTINUATION SHEET
FOR FILING ADMINISTRATIVE REGULATIONS
WITH THE SECRETARY OF STATE
(Pursuant to Government Code Section 11380.1)

obtained from the automatic sampler under test should be verified for quality by comparing on the basis of physical and chemical properties, with either a properly secured continuous nonautomatic sample or tank sample. The tank sample should be taken under the following conditions:

a. The batch pumped during the test interval should be diverted into a clean tank and a sample taken within one hour after cessation of pumping.

b. If the sampling of the delivery tank is to be delayed beyond one hour, then the tank selected must be equipped with an adequate mixing means. For valid comparison, the sampling of the delivery tank must be completed within eight hours after cessation of pumping, even though the tank is equipped with a motor-driven mixer.

c. When making a normal full-tank delivery from a tank, a properly secured sample may be used to check the results of the sampler if the parties mutually agree to this procedure.

7. "Receiver." The receiver must be a clean, dry container of convenient size to receive the sample. All connections from the sample probe to the sample container must be free of leaks. Two types of container may be used, depending upon service requirements.

BOXES MAY NOT BE TYPEWRITTEN

a. "Atmospheric container." The atmospheric container shall be constructed in such a way that it retards evaporation loss and protects the sample from extraneous material such as rain, snow, dust, and trash. The construction should allow cleaning, interior inspection, and complete mixing of the sample prior to removal. The container should be provided with a suitable vent.

b. "Closed container." The closed container shall be constructed in such a manner that it prevents evaporation loss. The construction must allow cleaning, interior inspection and complete mixing of the sample prior to removal. The container should be equipped with a pressure-relief valve.

(B) "Procedure."

1. "Nonautomatic sample."

a. Adjust the valve or plug cock from the sampling probe so that a steady stream is drawn from the probe. Whenever possible, the rate of sample withdrawal should be such that the velocity of liquid flowing through the probe is approximately equal to the average linear velocity of the stream flowing through the pipeline. Measure and record the rate of sample withdrawal as gallons per hour. Divert the sample stream to the sampling container continuously or intermittently to provide a quantity of sample that will be of sufficient size for analysis.

DO NOT WRITE IN THIS SPACE

2. "Automatic sampling." Purge the sampler and the sampling lines immediately before the start of a sampling operation. If the sample design is such that complete purging is not possible, circulate a continuous stream from the probe past or through the sampler and back into the line. Withdraw the sample from the side stream through the automatic sampler using the shortest possible connections. Adjust the sampler to deliver not less than 1 and not more than 40 gallons (151 liters) of sample during the desired sampling period. For time-cycle samplers, record the rate at which sample increments were taken per minute. For flow-responsive samplers, record the proportion of sample to total stream. Label the samples and deliver them to the laboratory in the containers in which they were collected.

(4) "Nozzle sampling." The nozzle sampling procedure is applicable for sampling gasoline from a service station underground storage tank.

(A) "Apparatus." Sample containers conforming with (d)(1) should be used. A spacer, if appropriate, and nozzle extension as shown in Figures 6 and 7 shall be used when nozzle sampling.

(B) "Procedure." Immediately after gasoline has been delivered from pump and pump has been reset, deliver a small amount of product into the sample container, using spacer (Figure 6), if needed,

DO NOT WRITE IN THIS SPACE

FOR FILING ADMINISTRATIVE REGULATIONS
WITH THE SECRETARY OF STATE
(Pursuant to Government Code Section 11380.1)

on the pump nozzle (vapor recovery type). Rinse sample container and dump product into waste container. Insert nozzle extension (Figure 7) into sample container and insert pump nozzle into extension with slot over air bleed hole. Replace sample container in chilling medium and fill slowly through nozzle extension to 70-80 percent full (Figure 8). Remove nozzle extension. Cap container at once. Check for leaks. Discard container and resample if leak occurs. If container is leak tight, place container in a cold chest of ice water.

(l) "Special precautions and instructions."

(1) "Precautions." Vapor pressures are extremely sensitive to evaporation losses and to slight changes in composition. When obtaining, storing, or handling samples, observe the necessary precautions to ensure samples representative of the product and satisfactory for RVP tests. Official samples should be taken by, or under the immediate supervision of a person of judgment, skill, and sampling experience. Never prepare composite samples for this test. Make certain that containers which are to be shipped by common carrier conform to Interstate Commerce Commission, state, or local regulations. When flushing or purging lines or containers, observe the pertinent regulations and precautions against fire, explosion, and other hazards.

(2) "Cooling bath." A bath (Figure 5) of sufficient size to hold the sample container and a

DO NOT WRITE IN THIS SPACE

FOR FILING ADMINISTRATIVE REGULATIONS
WITH THE SECRETARY OF STATE
(Pursuant to Government Code Section 11343.1)

cooling coil of about 25 feet (8 m) of copper tubing (3/8 inch (9 mm) or less outside diameter) shall be required when using the procedure described in (1)(7). One end of the coil is provided with a connection for attaching it to the tank sampling tap or valve. The other end is fitted with a suitable valve (outlet) of good quality. A removable copper tube of 3/8 inch or less outside diameter and of sufficient length to reach the bottom of the sample container shall be connected to the open end of the outlet valve.

(3) "Sample containers." Use containers of not less than 1 quart (1 liter) nor more than 2 gallons (7.5 liter) capacity, of sufficient strength to withstand the pressures to which they may be subjected, and of a type that will permit replacement of the cap or stopper with suitable connections for transferring the sample to the gasoline chamber of the vapor pressure apparatus. Open-type containers have a single opening which permits sampling by immersion. Closed-type containers have two openings, one in each end (or the equivalent thereof), fitted with valves suitable for sampling by water displacement or by purging.

(4) "Transfer connections." The transfer connection for the open-type container consists of an air tube and a liquid delivery tube assembled in a cap or stopper. The air tube extends to the bottom of the container. One end of the liquid delivery tube is flush with the inside face of the cap or stopper and the tube

is long enough to reach the bottom of the gasoline chamber while the sample is being transferred to the chamber. The transfer connection for the closed-type container consists of a single tube with a connection suitable for attaching it to one of the openings of the sample container. The tube is long enough to reach the bottom of the gasoline chamber while the sample is being transferred.

(5) "Sampling open tanks." Use clean containers of the open type when sampling open tanks and tank cars. An all-level sample obtained by the bottle procedure, (k)(1) is recommended. Before taking the sample, flush the container by immersing it in the product to be sampled. Then obtain the sample immediately. Pour off enough so that the container will be 70-80 percent full and close it promptly. Label the container and deliver it to the laboratory.

(6) "Sampling closed tanks." Containers of either the open or closed type may be used to obtain samples from closed or pressure tanks. If the open type is used, follow the cooling bath procedure described in (1)(7) or (1)(10). If the closed type is used, obtain the sample using the water displacement procedure, (1)(8), or the purging procedure, (1)(9). The water displacement procedure is preferable because the flow of product involved in the purging procedure may be hazardous.

(7) "Cooling bath procedure." When using a container of the open type, keep it at a temperature of 32 degrees to 40 degrees Fahrenheit (0 degrees to 4.5 degrees centigrade) during the sampling operation by using the cooling bath (Figure 5). Connect the coil to the tank sampling tap or valve and flush it with a sufficient amount of product to ensure complete purging. When obtaining a sample, throttle the outlet valve so that the pressure in the coil will be approximately the same as that in the tank. Fill the container once to wash and cool it, and discard the wash product. Then draw the sample immediately. Pour off enough so that the container will be 70-80 percent full and close it promptly. Label the container and deliver it to the laboratory.

(8) "Water displacement procedure." Completely fill the closed-type container with water and close the valves. The water should be at the same temperature or lower than that of the product to be sampled. While permitting a small amount of product to flow through the fittings, connect the top or inlet valve of the container to the tank sampling tap or valve. Then open all valves on the inlet side of the container. Open the bottom or outlet valve slightly to allow the water to be displaced slowly by the sample entering the container. Regulate the flow so that there is no appreciable change in pressure within the container. Close the outlet valve

DO NOT WRITE IN THIS SPACE

as soon as gasoline discharges from the outlet; then in succession close the inlet valve and the sampling valve on the tank. Disconnect the container and withdraw enough of the contents so that it will be 70-80 percent full. If the vapor pressure of the product is not high enough to force liquid from the container, open both the upper and lower valves slightly to remove the excess. Promptly seal and label the container, and deliver it to the laboratory.

(9) "Purging procedure." Connect the inlet valve of the closed-type container to the tank sampling tap or valve. Throttle the outlet valve of the container so that the pressure in it will be approximately equal to that in the container being sampled. Allow a volume of product equal to at least twice that of the container to flow through the sampling system. Then close all valves, the outlet valve first, the inlet valve of the container second, and the tank sampling valve last, and disconnect the container immediately. Withdraw enough of the contents so that the sample container will be 70-80 percent full. If the vapor pressure of the product is not high enough to force liquid from the container, open both the upper and lower valves slightly to remove the excess. Promptly seal and label the container and deliver it to the laboratory.

(10) "Nozzle sampling procedure." When using a container of the open type, keep it at a temperature

DO NOT WRITE IN THIS SPACE

of 32 degrees to 40 degrees Fahrenheit (0 degree to 4.5 degrees centigrade) when sampling by the nozzle sampling procedure. The container may be chilled by placing it into an ice chest containing ice (frozen water). The sampling is accomplished following the procedure in (k)(4).

Table 1

Summary of gasoline sampling procedures and applicability.

Type of container	Procedure	Paragraph
Storage tanks, ship and barge tanks, tank cars, tank trucks	Bottle sampling	(k)(1)
Storage tanks with taps	Tap sampling	(k)(2)
Pipes and lines	Continuous line sampling	(k)(3)
Service station underground storage tanks	Nozzle sampling	(k)(4)

DO NOT WRITE IN THIS SPACE

FOR FILING ADMINISTRATIVE REGULATIONS
WITH THE SECRETARY OF STATE
(Pursuant to Government Code Section 11380.1)

DO NOT WRITE IN THIS SPACE

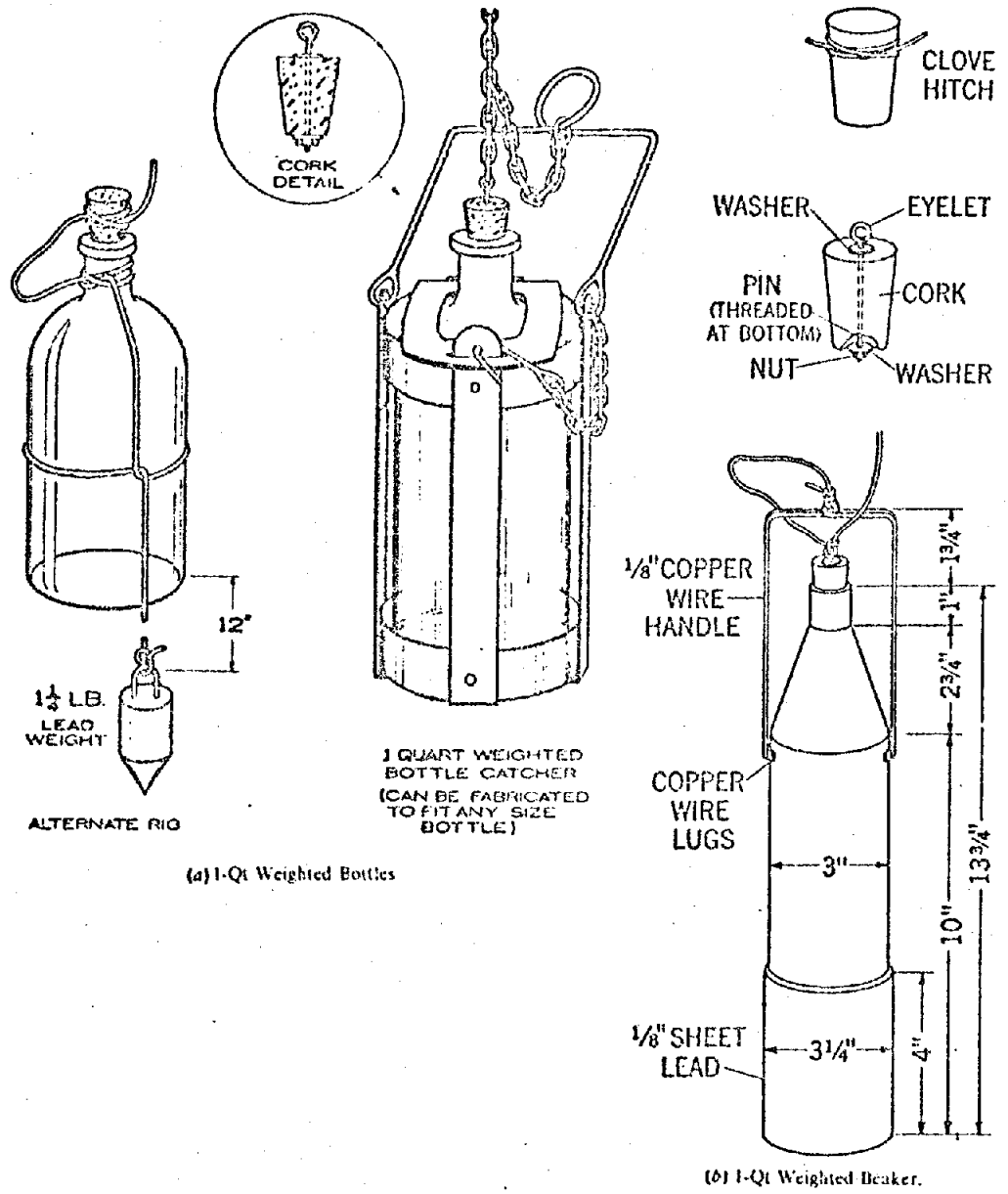

(a) 1-Qt Weighted Bottles

(b) 1-Qt Weighted Beaker.

Metric Equivalents

in.	⅛	1	1¾	2¾	3¼	4	10	12	13¾
mm	3	25	45	70	83	102	250	300	350

Figure 2. Assembly for Bottle Sampling

FOR FILING ADMINISTRATIVE REGULATIONS
WITH THE SECRETARY OF STATE
(Pursuant to Government Code Section 11380.1)

DO NOT WRITE IN THIS SPACE

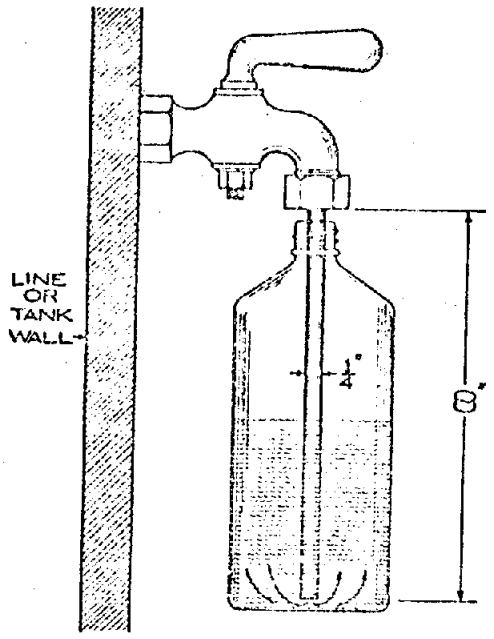

Figure 3. Assembly for Tap Sampling

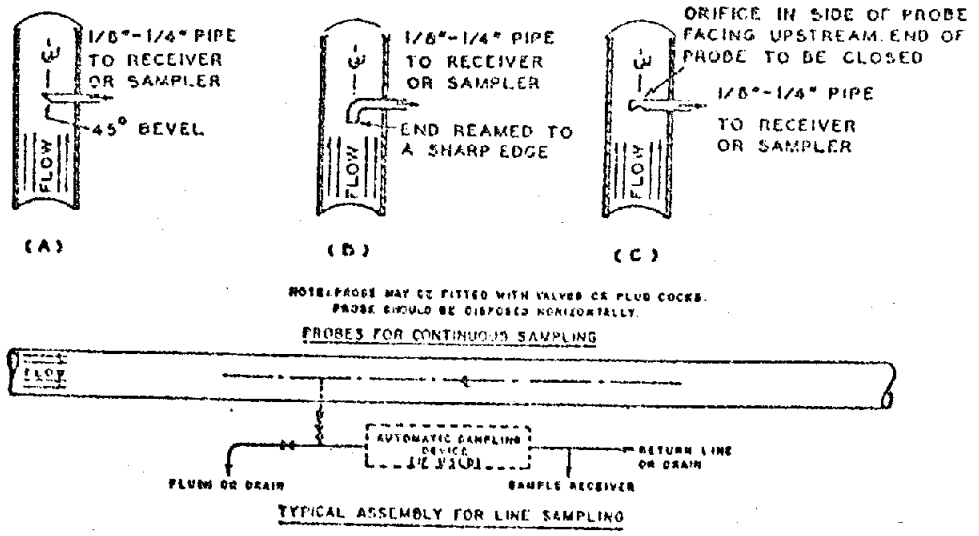

Figure 4. Probes for Continuous Sampling

FOR FILING AUTHORIZATIVE REVISIONS
WITH THE SECRETARY OF STATE
(Pursuant to Government Code Section 11380.1)

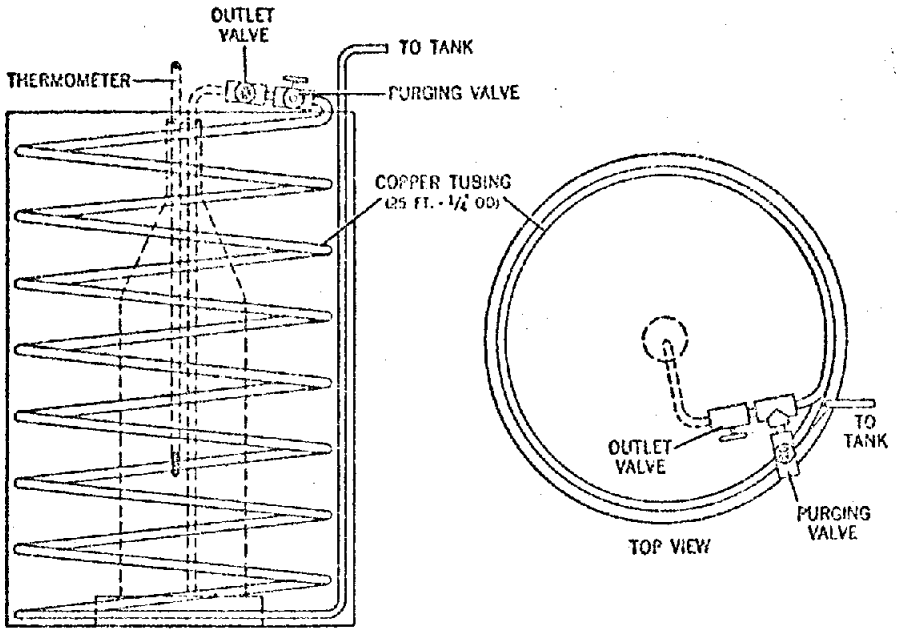

Figure 5. Cooling Bath for Reid Vapor Pressure Sampling

DO NOT WRITE IN THIS SPACE

DO NOT WRITE IN THIS SPACE

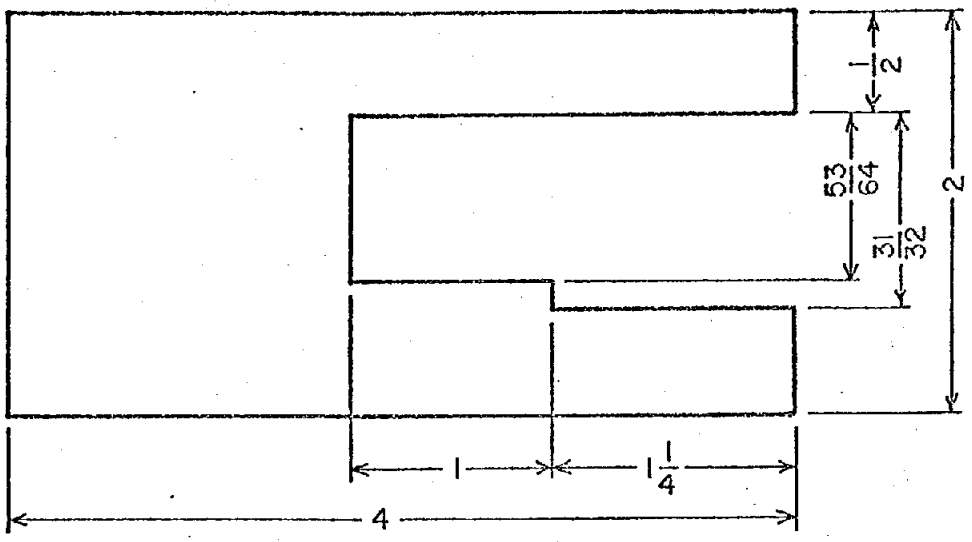

Make from $\frac{1}{4}$ inch flat steel
All dimensions in inches
Break all edges and corners

Figure 6. Spacer for Nozzle Sampling

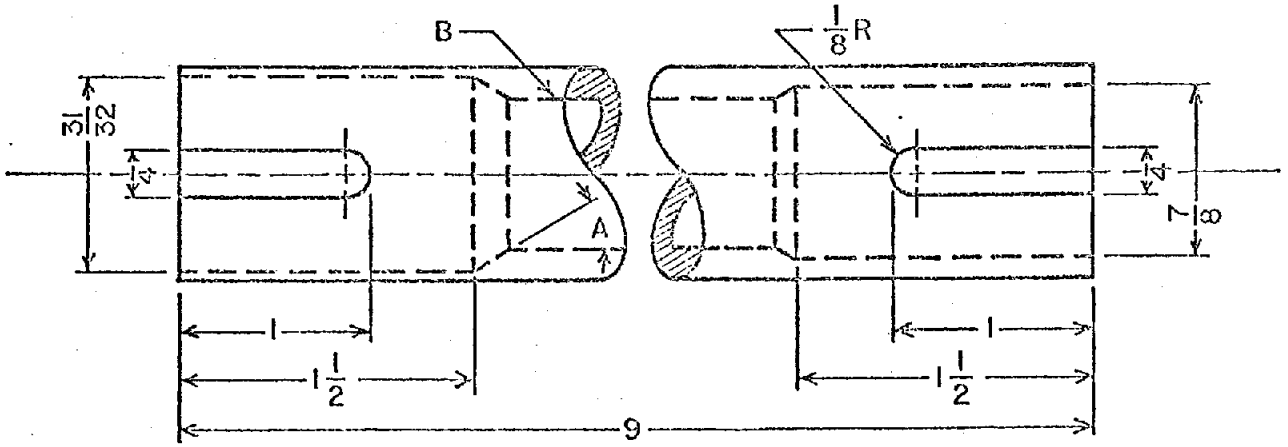

Use $\frac{3}{4}$ in. Schedule 80 Black Iron Pipe
All dimensions in inches
All tollerences $\pm \frac{1}{128}$ inch
A – Recommend 30°
B – Inside diameter Schedule 80 Black Iron Pipe

Figure 7. Nozzle Extension for Nozzle Sampling

FOR FILING AND EFFECTIVE DESIGNATIONS
WITH THE SECRETARY OF STATE
(Pursuant to Government Code Section 11350.1)

DO NOT WRITE IN THIS SPACE

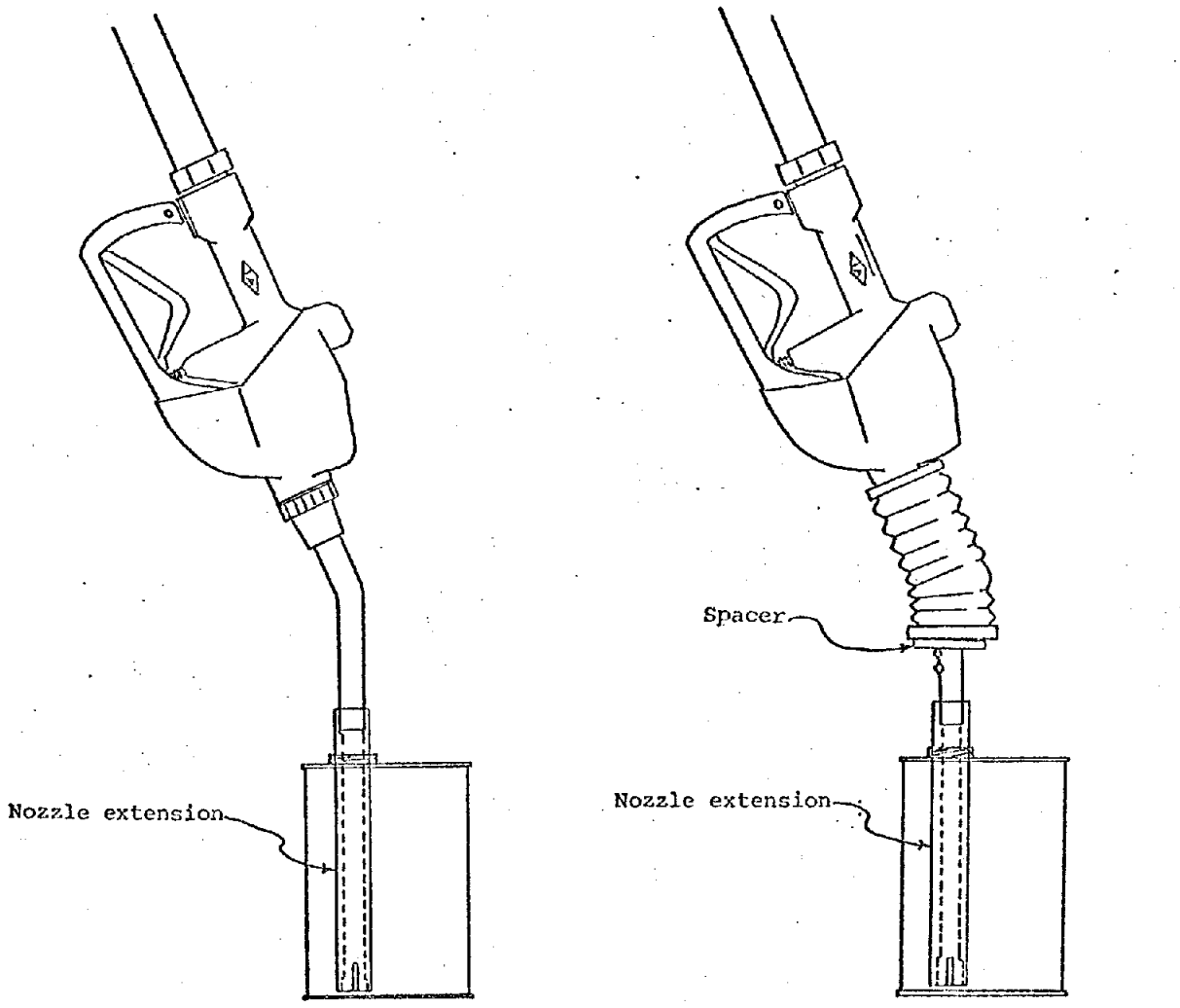

(a) Nozzle without vapor recovery (b) Nozzle with vapor recovery

Figure 8. Assembly for Nozzle Sampling

State of California
AIR RESOURCES BOARD

Resolution 80-27

June 26, 1980

WHEREAS, Sections 39600 and 39601 of the Health and Safety Code authorize the Air Resources Board (ARB) to adopt standards, rules and regulations necessary for the proper execution of the powers and duties granted to and imposed upon the Board by law;

WHEREAS, Section 43830 of the Health and Safety Code directs the ARB to establish maximum standards for the volatility of gasoline at nine pounds per square inch Reid vapor pressure (RVP) as determined by the American Society for Testing and Materials (ASTM) test Method D 323-58 or by an appropriate test determined by the ARB;

WHEREAS, Section 2251 of Title 13 of the California Administrative Code, entitled Reid Vapor Pressure of Gasoline, has previously been promulgated in accordance with the provisions of the Health and Safety Code and provides that RVP be determined in accordance with ASTM Method D 323-58;

WHEREAS, paragraph 4(b) of the RVP test method, ASTM Method D 323-58, states that sampling shall be done in accordance with ASTM Method D 270, entitled Standard Method of Sampling Petroleum and Petroleum Products;

WHEREAS, ASTM Method D 270 provides specific sampling procedures for obtaining gasoline samples under certain circumstances but, paragraph 7.1 of this method states that directions for sampling cannot be made explicit enough to cover all cases;

WHEREAS, the staff of the ARB determined that enforcement of Section 43830 of the Health and Safety Code requires taking gasoline samples at the point of sale or supply to motor vehicles and therefore employed a form of tap or continuous sampling during its inspection program during August 1977;

WHEREAS, sales of gasoline with a RVP greater than nine pounds per square inch were documented in August 1977 and complaints were filed against oil companies found to be selling such gasoline; and a lawsuit filed against Mobil Oil Corporation was brought to trial and heard in the Los Angeles Superior Court by Judge Max Wisot and the court's decision stated that the staff of the ARB did not strictly follow ASTM Method D 270 since in the court's opinion the bottle sampling method should have been utilized;

WHEREAS, the bottle sampling method specified in ASTM D 270 is infeasible as an enforcement tool to sample gasoline in underground storage tanks at service stations;

RECEIVED BY
Office of the Secretary

JUL 01 1980

Resources Agency of California

WHEREAS, the ARB has determined that as a result of the potential confusion stemming from the litigation arising from the August 1977 inspection, a specific regulation on obtaining gasoline samples from service station pump nozzles would provide useful clarification of the applicable test procedures;

WHEREAS, Section 43830 of the Health and Safety Code directs that the ARB has the option to establish an appropriate test method to determine the volatility of the gasoline sold in this state;

WHEREAS, the Board finds that Section 2251 as amended and Section 2261 of Title 17, California Administrative Code, are an appropriate test to determine the Reid vapor pressure of gasoline sold in this state; and

WHEREAS, notice of a public hearing to consider the proposed amendments to the RVP of Gasoline regulation and the proposed adoption of a gasoline sampling procedure for the purpose of vapor pressure testing has been given and a public hearing held in accordance with the provisions of the Health and Safety Code and the Administrative Procedure Act (Government Code Section 11371 et seq);

WHEREAS, it is necessary that the changes to regulations contained in Title 13, California Administrative Code, become effective as soon as possible after their adoption so that they will apply to the Board's enforcement of regulatory and statutory provisions governing the volatility of gasoline in the summer months of this year when air pollution problems are at their worst;

NOW, THEREFORE, BE IT RESOLVED that the Board amends Section 2251 and adopts Section 2261 of Subchapter 5, Chapter 3, Title 13, California Administrative Code, as set forth in the attachment hereto, as the test to determine the Reid vapor pressure of gasoline sold in this state;

BE IT FURTHER RESOLVED that the Board directs the Executive Officer to file with the Secretary of State the regulations adopted herein to become effective as soon as possible;

BE IT FURTHER RESOLVED that the ARB delegates to the Executive Officer of the ARB the authority to make further changes to the vapor pressure test and/or sampling methods for gasoline sold in this state based on suitable scientific and/or technical evidence; and

BE IT FURTHER RESOLVED that notwithstanding the amendments to Section 2251 and the addition of Section 2261, Title 17, California Administrative Code, adopted June 26, 1980, the provisions of Section 2251 as they existed prior to the effective date of these amendments shall continue to be operative and effective with respect to the sale or supply of fuel for motor vehicles prior to the effective date of said amendments.

I certify that the above is a true and correct copy of Resolution 80-27 as adopted by the Air Resources Board.

Sally Rump

Sally Rump
Board Secretary

State of California

Memorandum

To : Huey D. Johnson
Secretary
Resources Agency
1416 - 9th Street
Sacramento, CA 95814

Date : June 30, 1980

Subject : Filing of Notice of Decision of the Air Resources Board

From : Air Resources Board

Pursuant to Title 17, Section 60007(b), and in compliance with Air Resources Board certification under section 21080.5 of the Public Resources Code, the Air Resources Board hereby forwards for posting the attached notice of decision and response to environmental comments raised during the comment period.

Sally Rump
Board Secretary

attachment: Resolution 80-27

RECEIVED BY
Office of the Secretary

JUL 01 1980

Resources Agency of California

State of California
AIR RESOURCES BOARD

Response to Significant Environmental Issues

Item: Adoption of Amendments to Title 13, California Administrative Code, Regarding the Revision of the Reid Vapor Pressure of Gasoline Regulation and the Adoption of Sampling Procedures for the Enforcement of Reid Vapor Pressure Limits of Gasoline

Public Hearing Date: June 26, 1980

Response Date: June 26, 1980

Issuing Authority: Air Resources Board

Comment: It has been stated that service station sampling can survey only a minute fraction of the gasoline in California, particularly in relation to bulk terminal or refinery sampling; that bulk terminal and refinery sampling provide an opportunity to remedy problems in gasoline composition not provided by service station sampling; and that for these reasons, bulk terminal sampling is a more effective means of controlling air pollution in California than service station sampling.

Response: The proposed regulatory amendments do not preclude sampling at bulk terminals or refineries. To the extent that service station sampling does not provide the same opportunity as bulk terminal sampling to remedy problems in gasoline composition, bulk terminal sampling remains available as an enforcement option. There is no assurance that in fact Reid vapor pressure violations found at bulk terminals could or would be remedied before the gasoline was distributed for ultimate sale.

CERTIFIED: Kelley Burnett
Board Secretary

Date: 6-30-80

RECEIVED BY
Office of the Secretary

JUL 01 1980

Resources Agency of California

State of California
AIR RESOURCES BOARD

PUBLIC HEARING TO CONSIDER AMENDMENTS TO TITLE 13, CALIFORNIA ADMINISTRATIVE CODE SECTIONS 2251 AND 2261 REGARDING SAMPLING PROCEDURES FOR THE ENFORCEMENT OF REID VAPOR PRESSURE LIMITS OF GASOLINE

STATEMENT OF OPPOSING CONSIDERATIONS AND AGENCY RESPONSE

1. Opposing Consideration: Several gasoline manufacturers suggest that sampling be conducted only at gasoline bulk marketing facilities and/or refineries so that a large amount of gasoline can be surveyed and so that adjustments to correct the RVP, if necessary, can be made before distribution.

Agency Response: The amendments to the regulation do not preclude enforcement of RVP limitations at bulk terminals or refineries. Under the regulation the sampling may be conducted at any stage in the gasoline distribution system. Enforcement of RVP regulations at the service station may be more cost-effective than enforcement at bulk terminals as the gasoline found at the bulk terminal represents only a single batch. The gasoline in service station storage tanks represents deliveries which have been made over a period of several days thus representing several batches of gasoline. There is no assurance that gasoline found to exceed the RVP limitation at the bulk terminals will be brought into compliance before further distribution.

Additionally, Health and Safety Code Section 43016 is interpreted to require that a violation be found at the point of sale. Only service station sampling can establish this. Service station sampling is also likely to provide a greater deterrent to Reid vapor pressure violations than bulk terminal sampling,

because the potential civil penalties under Section 43016 are far higher than any that could be recovered if sampling were done at bulk terminals or refineries.

The Board expects that enforcement staff will sample at refineries and bulk terminals.

2. Opposing Consideration: Several gasoline manufacturers commented that the pumps which supply the lines to the gasoline dispensers necessarily draw product from close to the bottom of the tank and, therefore, will not provide a representative sample of the product in the tank. It was claimed that only the bottle sampling method would yield representative samples of the gasoline in an underground storage tank.

Agency Response: It is well known that gasoline is highly miscible. Various batches of gasoline added to an underground tank will always be miscible with gasoline already in the tank. Due to turbulent action when a new batch of gasoline is added to a tank, there will be excellent mixing of the total contents. Therefore, it is likely that any sample drawn from an underground tank will be representative of all the contents.

Submersible pumps in wide use in underground tanks at service stations provide additional mixing during their operation, which occurs each time gasoline is dispensed to a vehicle. Thermal gradients existing in an underground storage tank tend to create convective mixing of the contents.

Test data indicate that there is no significant difference in the Reid vapor pressure of gasoline drawn from an underground storage tank by the ASTM bottle method compared to a sample taken from the same tank during the same time period according to the method developed by Chevron Research.

3. Opposing Consideration: Several gasoline manufacturers state in both written and oral comments that nozzle sampling at the service station may cause additional air to become entrained in the gasoline and that this increase in air saturation may raise the Reid vapor pressure result. These manufacturers suggest that the current sampling procedures provided in ASTM D-270 continue to be used for enforcement.

   Agency Response: The consideration is not persuasive because no data or test results were brought before the Board to substantiate this theory. In addition, the data referred to above comparing the proposed nozzle sampling procedures and the widely accepted ASTM bottle method at a service station underground storage tank show no significant difference in RVP results. Any air saturation of gasoline during nozzle sampling is minimal and should not preclude the use of the nozzle sampling method as an enforcement tool.

   The Board will consider at any time reliable evidence tending to show that the test and sampling method for RVP should be amended or improved.

4. Opposing Consideration: Mr. Benshoof, representing Mobil and Gulf, commented that changes in the sampling procedure should be channeled through ASTM.

Agency Response: Complying with this suggestion is inappropriate at this time because of the substantial amount of time it would take for ASTM to amend its sampling procedure. An enforceable gasoline volatility regulation is needed now for the current RVP season. The ASTM would take at least one year to study, evaluate and adopt any changes in its sampling procedure. If and when the ASTM method is altered, the Board will review its regulation governing RVP testing and sampling.

5. Opposing Consideration: A comment from Mr. Ward Benshoof, speaking on behalf of Mobil and Gulf, opposes the proposed amendments because ASTM has revised its reproducibility from 0.3 to 0.7 in the test method D-323 and that the ARB should recognize this change if it amends its regulations.

Agency Response: The amendments to the regulations concern only gasoline sampling procedures. This comment does not address those procedures.

State of California

AIR RESOURCES BOARD

Resolution 80-28

April 23, 1980

WHEREAS, a solicited research Proposal Number 921-76 entitled "An Inventory of Carcinogenic Substances Released Into the Ambient Air of California--Phase II" has been submitted by Science Applications, Inc., to the Air Resources Board; and

WHEREAS, the Research staff has reviewed and recommended this proposal for approval; and

WHEREAS, the Research Screening Committee has reviewed and recommends for funding:

> Proposal Number 921-76 entitled "An Inventory of Carcinogenic Substances Released Into the Ambient Air of California--Phase II" submitted by Science Applications, Inc., for an amount not to exceed $199,974;

NOW, THEREFORE, BE IT RESOLVED, that the Air Resources Board pursuant to the authority granted by Health and Safety Code Section 39703 hereby accepts the recommendation of the Research Screening Committee and approves the following:

> Proposal Number 921-76 entitled "An Inventory of Carcinogenic Substances Released Into the Ambient Air of California--Phase II" submitted by Science Applications, Inc., for an amount not to exceed $199,974,

BE IT FURTHER RESOLVED, that the Executive Officer shall initiate administrative procedures and execute all necessary documents and contracts for the research effort proposed in an amount not to exceed $199,974.

I certify that the above is a true and correct copy of Resolution 80-28 as passed by the Air Resources Board

Sally Rump

Sally Rump
Board Secretary

State of California
AIR RESOURCES BOARD

Item No.: 80-7-3
Date: April 24, 1980

ITEM: Research Proposal No. 921-76 entitled "An Inventory of Carcinogenic Substances Released Into the Ambient Air of California--Phase II"

RECOMMENDATION: Adopt Resolution 80-28 approving Research Proposal No. 921-76 for funding in an amount not to exceed $199,974.

SUMMARY: In Phase I of the project, eleven candidate carcinogenic materials released into the State's ambient air from mining and manufacturing sources were identified. These are in alphabetical order: arsenic, asbestos, benzene, cadmium, carbon tetrachloride, chloroform, ethylene dibromide, ethylene dichloride, nitrosamines, perchlorothylene and polycyclic organic materials (POM). Seventeen potential emission sources of the carcinogens were located, and sampling and chemical testing procedures for quantification of the carcinogens were recommended.

In Phase II of this project, the contractor will implement the recommended or suitable alternative sampling and testing procedures at the selected sites to develop emission factors and rates for the carcinogens. The contractor will then suggest control measures for emissions reduction and provide supporting data for the development of air quality or emission standards.

The Research Screening Committee approved the RFP for this project, which was then released to approximately 90 potential contractors. Two responses were received, of which the proposal by Science Applications, Inc. was judged to be the more meritorious by the staff and the Committee.

The objectives of this study are to: review the proposed sampling and analytical procedures recommended in the Phase I effort, comparing and contrasting alternative sampling methods; sample the effluents, statistically basing the number of sources tested and samples analyzed to provide the greatest confidence in the test data; implement a Quality Assurance program to enhance the

State of California

AIR RESOURCES BOARD

Resolution 80-29

April 23, 1980

WHEREAS, a solicited research Proposal Number 915-76 entitled "Evaluation of Performance Properties of CARB Complying versus Conventional Industrial Coatings" has been submitted by D L Laboratories, Inc. to the Air Resources Board; and

WHEREAS, the Research staff has reviewed and recommended this proposal for approval; and

WHEREAS, the Research Screening Committee has reviewed and recommends for funding the proposal:

> Proposal Number 915-76 entitled "Evaluation of Performance Properties of CARB Complying versus Conventional Industrial Coatings" submitted by D L Laboratories, Inc. for an amount not to exceed $98,444;

NOW, THEREFORE, BE IT RESOLVED, that the Air Resources Board pursuant to the authority granted by Health and Safety Code Section 39703 hereby accepts the recommendation of the Research Screening Committee and approves the following:

> Proposal Number 915-76 entitled "Evaluation of Performance Properties of CARB Complying versus Conventional Industrial Coatings" submitted by D L Laboratories, Inc. for an amount not to exceed $98,444,

BE IT FURTHER RESOLVED, that the Executive Officer shall initiate administrative procedures and execute all necessary documents and contracts for the research effort proposed in an amount not to exceed $98,444.

I certify that the above is a true and correct copy of Resolution 80-29 as passed by the Air Resources Board

Sally Rump

Sally Rump
Board Secretary

State of California
AIR RESOURCES BOARD

Item No.: 80-7-3
Date: April 24, 1980

ITEM: Research Proposal 915-76 entitled "Evaluation of Performance Properties of CARB-Complying versus Conventional Industrial Coatings"

RECOMMENDATION: Adopt Resolution 80-29, approving Research Proposal 915-76 for funding in an amount not to exceed $98,444.

SUMMARY: At its meeting on September 27, 1978, the Board adopted a model rule to control volatile organic compound (VOC) emissions from a category of industrial painting operations entitled "Manufactured Metal Parts and Products". With the exception of automobiles, cans and coils, marine vessels and aircraft and aerospace vehicles, the rule applies to all metal objects that are painted during a manufacturing process. In general, the rule requires the substitution of low-polluting and generally more energy-efficient low-solvent (waterborne and high-solids) and powder coatings for conventional high-solvent industrial coatings. However, due to the technology-forcing nature of the rule, the length of time required for development of suitable complying coatings for all affected end uses could not be predicted with a great deal of accuracy. For this reason, a provision was included in the rule requiring a review of the emission limitations prior to its implementation on January 1, 1982. Therefore, a study is needed to determine the progress of the coating industry toward the development of complying industrial coatings that satisfy the varied requirements of its customers.

A Request For Proposals was released for this project and two responses were received. The proposal submitted by D L Laboratories, Inc. was determined by staff and the Research Screening Committee to be most responsive to the RFP.

The objective of this study is to determine the availability of industrial coatings that will comply with the ARB model rule and to evaluate the properties of these coatings. The purpose of this evaluation is to identify specific coating end uses for which suitable complying low-solvent

coatings may not be commercially available before the date of compliance.

A brief but comprehensive questionnaire will be sent to 50 raw material suppliers, 200 paint manufacturers and 200 paint users requesting information on and samples of both low-solvent and conventional coatings. Roughly equal numbers of both types of coatings, up to a maximum of 160 total samples, will be tested for relevant coating properties. The extensive testing program will allow the investigator to make a fairly independent evaluation of the latest coating technologies relevant to the ARB's model rule.

State of California

AIR RESOURCES BOARD

Resolution 80-30

April 23, 1980

WHEREAS, a solicited research Proposal Number 917-76 entitled "Investigation Into the Nature of Emulsified Asphalts Compatible With Local California Aggregate and Substitution of Sulfur for Asphalt in Aqueous Emulsified Systems" has been submitted by Engineers Testing Laboratories, Inc., to the Air Resources Board; and

WHEREAS, the Research staff has reviewed and recommended this proposal for approval; and

WHEREAS, the Research Screening Committee has reviewed and recommends for funding:

> Proposal Number 917-76 entitled "Investigation Into the Nature of Emulsified Asphalts Compatible with Local California Aggregates and Substitution of Sulfur for Asphalt in Aqueous Emulsified Systems" submitted by Engineers Testing Laboratories, Inc. for an amount not to exceed $123,873;

NOW, THEREFORE, BE IT RESOLVED, that the Air Resources Board pursuant to the authority granted by Health and Safety Code Section 39703 hereby accepts the recommendation of the Research Screening Committee and approves the following:

> Proposal Number 917-76 entitled "Investigation Into the Nature of Emulsified Asphalts Compatible With Local California Aggregates and Substitution of Sulfur for Asphalt in Aqueous Emulsified Systems" submitted by Engineers Testing Laboratories, Inc., for an amount not to exceed $123,873,

BE IT FURTHER RESOLVED, that the Executive Officer shall initiate administrative procedures and execute all necessary documents and contracts for the research effort proposed in an amount not to exceed $123,873.

I certify that the above is a true and correct copy of Resolution 80-30 as passed by the Air Resources Board

Sally Rump

Sally Rump
Board Secretary

State of California
AIR RESOURCES BOARD

Item No.: 80-7-3
Date: April 24, 1980

ITEM: Research Proposal No. 917-76 entitled "Investigation Into the Nature of Emulsified Asphalts Compatible With California Local Aggregate and Substitution of Sulfur for Asphalt in Aqueous Emulsified Systems"

RECOMMENDATION: Adopt Resolution 80-30 approving Research Proposal No. 917-76 for funding in an amount not to exceed $123,873.

SUMMARY:

Emissions of hydrocarbon solvent from cutback asphaltic cold paving mixes contribute to the buildup of atmospheric ozone. This problem is particularly acute in non-urban and agricultural areas where logistics demand a greater use of these solvent-borne cold liquid systems for paving applications. The Air Resources Board has recommended that emulsified asphalt systems with a maximum solvent content of three volume percent be substituted for a majority of the paving and surface treatment applications currently involving solvent cutbacks, thus achieving a statewide hydrocarbon emission reduction of 85 percent (60 tons per day). However, difficulty encountered in the successful application of emulsified asphalts for road building in California has centered around the claim that the aqueous systems currently available do not make successful mixed-in-place cold mixes with local aggregates.

With the guidance of the Research Screening Committee, the staff released a Request for Proposals for a study to evaluate the application of emulsified asphalts and emulsified systems composed of flexibilized sulfur of blends of asphalt and sulfur, to determine whether any of these systems can be successfully used in paving mixes with local aggregate.

One response was received from the Engineers Testing Laboratories, Inc. The proposal is fully responsive to the requirements listed in the RFP. Additionally, because of this firm's experience in similar research projects, the

qualifications of the principal investigator and staff, and their current involvement in a two-year study to evaluate aqueous emulsified binders of sulfur-extended asphalt and flexibilized sulfur for the federal Department of Highways, the Committee recommended the ETL proposal be funded.

The objectives of this study are to evaluate binder performance of emulsified asphalt and sulfur-extended and flexibilized sulfur systems with local aggregate, formulating cold paving mixes to the specification requirements by the California Department of Transportation. Aggregate from three statewide sites will be selected for evaluation. On completion of all tests, the Contractor will perform an analysis of variance of the many variables and from the analysis recommend optimum design criteria. The costs of building comparable roads with emulsified mixes and hot road oil mixes will also be compared.

State of California

Resolution 80-31

April 23, 1980

WHEREAS, a solicited research Proposal Number 919-76 entitled "A Study of the Origin and Fate of Oxidant in the North Central Coast Air Basin" has been submitted by SRI International to the Air Resources Board; and

WHEREAS, the Research staff has reviewed and recommended this proposal for approval; and

WHEREAS, the Research Screening Committee has reviewed and recommends for funding:

> Proposal Number 919-76 entitled "A Study of the Origin and Fate of Oxidant in the North Central Coast Air Basin" submitted by SRI International for an amount not to exceed $199,969;

NOW, THEREFORE, BE IT RESOLVED, that the Air Resources Board, pursuant to the authority granted by Health and Safety Code Section 39703, hereby accepts the recommendation of the Research Screening Committee and approves the following:

> Proposal Number 919-76 entitled "A Study of the Origin and Fate of Oxidant in the North Central Coast Air Basin" submitted by SRI International for an amount not to exceed $199,969,

BE IT FURTHER RESOLVED, that the Executive Officer shall initiate administrative procedures and execute all necessary documents and contracts for the research effort proposed in an amount not to exceed $199,969.

I certify that the above is a true
and correct copy of Resolution 80-31
as passed by the Air Resources Board

Sally Rump

Sally Rump
Board Secretary

State of California
AIR RESOURCES BOARD

ITEM NO: 80-7-3
DATE: April 24, 1980

ITEM: Research Proposal No. 919-76 entitled "A Study of the Origin and Fate of Oxidant in the North Central Coast Air Basin".

RECOMMENDATION: Adopt Resolution 80-31 approving Research Proposal No. 919-76 for funding in an amount not to exceed $199,969.

SUMMARY: Wind patterns in the Bay Area suggest that emissions from this region are transported through the Santa Clara Valley and into the North Central Coast Air Basin, thus contributing to the oxidant levels in the North Central Coast Air Basin. As a result there is concern about the extent of this transport of pollutants into Santa Clara, Monterey and Santa Cruz Counties. The frequency of occurrence of such transport is poorly characterized and the impacts have never been quantified.

This project will consist of a meteorological study to identify the conditions under which pollutant transport from the Bay Area into the Santa Clara Valley and into the North Central Coast Air Basin may occur, and the frequency of such conditions; and tracer studies to define the extent and degree of pollutant transport. The tracer studies will consist of 10 tests in which small amounts of two chemically inert tracer gases will be released from sites within or adjacent to the San Francisco Bay Area. Each of these tracer releases will be acccompanied by release of a constant altitude balloon (tetroon) equipped with a radar transponder. The tetroon will be tracked by airborne radar in an instrumented aircraft. Air samples will be collected for tracer analysis by the aircraft and by fixed and mobile ground stations. Air quality analyses will also be made by the aircraft and by two fixed laboratory vans as well as by stations of the State air quality monitoring network.

The results of this project are needed to assist in the development of control strategies that will permit achievement of the ambient air quality standard for ozone in the areas where the sources are located and in the downwind receptor areas.

State of California

AIR RESOURCES BOARD

Resolution 80-32

April 23, 1980

WHEREAS, a solicited research Proposal Number 914-76 entitled "Survey of Heavy-Duty Diesel Maintenance Practices" has been submitted by Science Applications, Inc. to the Air Resources Board; and

WHEREAS, the Research staff has reviewed and recommended this proposal for approval; and

WHEREAS, the Research Screening Committee has reviewed and recommends for funding:

> Proposal Number 914-76 entitled "Survey of Heavy-Duty Diesel Maintenance Practices" submitted by Science Applications, Inc. for an amount not to exceed $74,754;

NOW, THEREFORE, BE IT RESOLVED, that the Air Resources Board pursuant to the authority granted by Health and Safety Code Section 39703, hereby accepts the recommendation of the Research Screening Committee and approves the following:

> Proposal Number 914-76 entitled "Survey of Heavy-Duty Diesel Maintenance Practices" submitted by Science Applications, Inc. for an amount not to exceed $74,754.

BE IT FURTHER RESOLVED, that the Executive Officer shall initiate administrative procedures and execute all necessary documents and contracts for the research effort proposed in an amount not to exceed $74,754.

I certify that the above is a true
and correct copy of Resolution 80-32
as passed by the Air Resources Board

Sally Rump

Sally Rump
Board Secretary

State of California
AIR RESOURCES BOARD

ITEM NO: 80-7-3
DATE: April 24, 1980

ITEM: Research Proposal No. 914-76 entitled "Survey of Heavy-Duty Diesel Maintenance Practices"

RECOMMENDATION: Adopt Resolution 80-32 approving Research Proposal No. 914-76 for funding in an amount not to exceed $74,754.

SUMMARY:

Heavy-duty diesel-powered vehicles (6001 pounds GVW and over) are currently exempt from both the Certificate of Compliance and the Mandatory Vehicle Inspection Programs in California. There are insufficient information or supporting data available to effectively assess the need for a heavy-duty diesel-powered vehicle inspection/maintenance program in California. The information provided by this study, in conjunction with data from studies sponsored by the EPA, other ARB data, and a staff determination of the potential emission reduction benefits, will be used by the staff to assess the need for such a program.

Using surveys, questionnaires, analyses, and preferably personal contacts with heavy-duty vehicle users in the field, the contractor will determine fleet sizes and ownership, vehicle usage, maintenance practices and costs, and other information relevant to inspection/maintenance program needs.

With the guidance of the Research Screening Committee, the staff released a request for proposals for this project.

Two responses were recieved, of which this proposal by Science Applications, Inc., was concluded to be most meritorious by the staff and the Committee.

State of California

AIR RESOURCES BOARD

Resolution 80-33

April 23, 1980

WHEREAS, an unsolicited research Proposal Number 924-76 entitled "Health Effects from the Inhalation of Oxidant Air Pollutants as Related to the Immune System" has been submitted by the University of California at Davis to the Air Resources Board; and

WHEREAS, the Research staff has reviewed and recommended this proposal for approval; and

WHEREAS, the Research Screening Committee has reviewed and recommends for funding:

> Proposal Number 924-76 entitled "Health Effects from the Inhalation of Oxidant Air Pollutants as Related to the Immune System" submitted by the University of California at Davis for an amount not to exceed $82,589;

NOW, THEREFORE, BE IT RESOLVED, that the Air Resources Board pursuant to the authority granted by Health and Safety Code Section 39703, hereby accepts the recommendation of the Research Screening Committee and approves the following:

> Proposal Number 924-76 entitled "Health Effects from the Inhalation of Oxidant Air Pollutants as Related to the Immune System" submitted by the University of California at Davis for an amount not to exceed $82,589.

BE IT FURTHER RESOLVED, that the Executive Officer shall initiate administrative procedures and execute all necessary documents and contracts for the research effort proposed in an amount not to exceed $82,589.

I certify that the above is a true
and correct copy of Resolution 80-33
as passed by the Air Resources Board

Sally Rump

Sally Rump
Board Secretary

State of California
AIR RESOURCES BOARD

ITEM NO: 80-7-3
DATE: April 24, 1980

ITEM: Research Proposal No. 924-76 entitled "Health Effects from the Inhalation of Oxidant Air Pollutants as related to the Immune System"

RECOMMENDATION: Adopt Resolution 80-33 approving Research Proposal No. 924-76 for funding in an amount not to exceed $82,589.

SUMMARY: Asthma has emerged as the disease state considered most sensitive to and most commonly affected by ozone and certain other air pollutants. Both clinical and epidemiological studies have shown that ambient pollutant concentrations are often likely to produce adverse respiratory effects in asthmatics. Asthma is basically a defect in the immune system that produces a hyper-reactive response to inhaled antigens (foreign proteins), cold air and other stimuli. The most apparent clinical manifestation is a restriction of the conducting air-ways leading to extreme breathing difficulty.

This proposal seeks support for the third year of a planned three-year study underway to investigate the effects of ozone and ozone-sulfuric acid (H_2SO_4) mixtures in an animal model for asthma. The work done to date and that proposed here delves into the immunological basis for the reactive response that lies at the root of asthma induction. Asthma would be difficult to test for in mice, so another approach has been used to detect the sensitization. Anaphalaxis induced by an injected protein is used as the indicator. The immune mechanism involved in anaphalaxis is identical to that seen in the asthma induction pathway of humans except that it is a systemic response, while asthma is a local reaction to a locally applied antigen. The same agents and biological pathways are involved.

It is also the intent of the proponent to continue to study pollutant-induced defects in the immune system's ability to resist viral infection. Increased incidences of respiratory infections have been associated with community exposures to polluted ambient air. Immunological experiments would validate these observations and perhaps elucidate the mechanism.

A portion of this study will involve determination of whether the cellular level damage caused by O_3 - H_2SO_4 and combination exposures results in the eventual sensitization of the body to its own cells (auto-immune response). This appears to be one explanation of the root for certain serious pulmonary diseases.

New efforts would be initiated this year to elucidate the mechanisms involved in the observed enhanced response to ozone and O_3 -H_2SO_4 exposures. The findings would indicate whether immune system response or cell membrane integrity changes are involved. This would be done by using two strains of mice, one with a known defect in immune regulation and the other normal. The findings of this part of the project would help explain results of work on human subjects who have commonly exhibited enhanced responsiveness to allergens or histamines after ozone exposure.

State of California

AIR RESOURCES BOARD

Resolution 80-34

April 23, 1980

WHEREAS, an unsolicited research Proposal Number 907-76 entitled "The Effects of Present and Potential Air Pollution on Important San Joaquin Valley Crops" has been submitted by the University of California at Riverside to the Air Resources Board; and

WHEREAS, the Research staff has reviewed and recommended this proposal for approval; and

WHEREAS, the Research Screening Committee has reviewed and recommends for funding:

> Proposal Number 907-76 entitled "The Effects of Present and Potential Air Pollution on Important San Joaquin Valley Crops" submitted by the University of California at Riverside for an amount not to exceed $105,472;

NOW, THEREFORE, BE IT RESOLVED, that the Air Resources Board, pursuant to the authority granted by Health and Safety Code Section 39703, hereby accepts the recommendation of the Research Screening Committee and approves the following:

> Proposal Number 907-75 entitled "The Effects of Present and Potential Air Pollution on Important San Joaquin Valley Crops" submitted by the University of California at Riverside for an amount not to exceed $105,472,

BE IT FURTHER RESOLVED, that the Executive Officer shall initiate administrative procedures and execute all necessary documents and contracts for the research effort proposed in an amount not to exceed $105,472.

I certify that the above is a true
and correct copy of Resolution 80-34
as passed by the Air Resources Board

Sally Rump

Sally Rump
Board Secretary

State of California
AIR RESOURCES BOARD

ITEM NO.: 80-7-3
DATE: April 24, 1980

ITEM: Research Proposal No. 907-76 entitled "The Effects of Present and Potential Air Pollution on Important San Joaquin Valley Crops".

RECOMMENDATION: Adopt Resolution 80-34 approving Research Proposal No. 907-76 for funding in an amount not to exceed $105,472.

SUMMARY: Although considerable research has been conducted to determine the effects of air pollutants on various plant species, the majority of this research has focused on either acute exposures or the study of annuals as opposed to perennial crops. This study was undertaken in the Spring of 1979 to evaluate the potential oxidant damage to two of the most important perennial San Joaquin Valley crops grown under field conditions, alfalfa and Thompson Seedless grapes. This proposed study is for the second year effort of what was originally planned as a two to three year effort.

The major objectives of this study are to:

- o determine whether Thompson Seedless grapes are being damaged by existing levels of oxidant-type air pollution (reduction in yields and/or fruit quality).

- o determine the effects of SO_2 and ambient, subambient, and artificially elevated oxidant concentrations on alfalfa growth and quality.

Alfalfa and Thompson Seedless grapes are being grown in open-top growth chambers under actual field conditions supplied with air containing pre-determined levels of pollutants. In the proposed second year of the alfalfa study, the air pollutant treatments are as they were last year: (1) ambient, non-filtered air, (2) carbon-filtered air, (3) carbon-filtered air to which ambient levels of ozone are added, (4) ambient air to which SO_2 is added, (5) carbon filtered air to which ozone is added to increase ozone dose by 50 percent, and (6) a non-enclosed ambient plot to test chamber effects. With the second year of the Thompson Seedless grapes, treatments will be: (1) filtered air and (2) ambient (non-filtered) air. All plant responses are correlated with calculated pollution dose, as well as oxidant and/or SO_2 concentration.

State of California
AIR RESOURCES BOARD
Resolution 80-35

April 23, 1980

WHEREAS, an unsolicited research Proposal Number 929-76 entitled "Responses to Oxidants" has been submitted by the University of California at Santa Barbara to the Air Resources Board; and

WHEREAS, the Research staff has reviewed and recommended this proposal for approval; and

WHEREAS, the Research Screening Committee has reviewed and recommends for funding:

> Proposal Number 929-76 entitled "Responses to Oxidants" submitted by the University of California at Santa Barbara for an amount not to exceed $168,834;

NOW, THEREFORE, BE IT RESOLVED, that the Air Resources Board, pursuant to the authority granted by Health and Safety Code Section 39703, hereby accepts the recommendation of the Research Screening Committee and approves the following:

> Proposal Number 929-76 entitled "Responses to Oxidants" submitted by the University of California at Santa Barbara for an amount not to exceed $168,834;

BE IT FURTHER RESOLVED, THAT THE Executive Officer shall initiate administrative procedures and execute all necessary documents and contracts for the research effort proposed in an amount not to exceed $168,834.

I certify that the above is a true
and correct copy of Resolution 80-35
as passed by the Air Resources Board

Sally Rump

Sally Rump
Board Secretary

State of California
AIR RESOURCES BOARD

ITEM NO: 80-7-3
DATE: April 24, 1980

ITEM: Research Proposal No. 929-76 entitled "Responses to Oxidants."

RECOMMENDATION: Adopt Resolution 80-35 approving Research Proposal No. 929-76 for funding in an amount not to exceed $168,834.

SUMMARY: California smog is a mixture of many compounds. Prominent are photochemical oxidants, NO_2, aerosols and hydrocarbons. The photochemical oxidant portion is a complex mix of ozone, peroxides and other organic oxidizers, particularly peroxyacyl nitrates (PANs). Considerable research effort has been brought to bear on elucidating the effects of ozone on plants and animals to the extent that a fair picture now exists of the hazards associated with this pollutant. PANs, (specifically peroxyacetyl nitrate) are another case. Early vegetation research was done to identify PAN damage followed by limited exposure work to confirm the field finding that concentrations in the 100-1000 ppb range affect certain plants. Very limited work has been done employing PAN in human or animal exposure work. Among such limited research is the early work by Drs. Gliner and Horvath at U.C. Santa Barbara showing pulmonary function effects at 0.24 ppm PAN.

Recent regulatory actions by EPA have brought up the question of how adverse effects of the oxidant complex might differ from those of ozone. EPA has now established an ozone standard numerically less stringent than the earlier oxidant standard. Such a standard may well protect most of the U.S. where ozone rather than other oxidants is present. One of the central issues regarding their change in the standard from oxidant to ozone was whether removing other oxidants from consideration might allow potentially harmful effects to occur.

One element of this study is to determine whether acute interaction effects can be seen between O_3 and PAN (peroxyacetyl nitrate) on metabolic, pulmonary and neurological responses in man. Subjects numbering between 10 and 15 will undergo moderate exercise (at approximately 50 percent of their maximal capacity) in 30-minute shifts followed by a 30-minute intermission of exercise, and then repeated exercise for another hour. During the rest periods the subjects will perform mental accuracy, motor-skill and pulmonary function testing. Previous studies by the proponent have demonstrated factors to be affected by ozone exposure.

Heart rate, oxygen consumption and carbon dioxide production will also be measured to indicate the metabolic state of the individuals at various times during the exposure. E.E.G. tracings will also be taken at the end of each exercise period to obtain information on nervous system status.

The second part of this study would extend previous efforts to examine the response of subjects to different regimes of repeated ozone exposure. Specifically, work would be done to: 1) provide a more definitive statement concerning effects of prior exposure to low levels of O_3; 2) determine the variables that will predict whether an individual will be sensitized by low levels of ozone, and; 3) determine if there are differences between sexes in sensitivity to ozone as has been seen under current efforts and whether these differences are related to differences in pulmonary capacities between the sexes or to differences in work capacity.

State of California

AIR RESOURCES BOARD

Resolution 80-36

April 23, 1980

WHEREAS, an unsolicited research Proposal Number 927-76 entitled "Effects of SO_2 and Ozone on Growth Productivity, Physiology and Biochemistry of Crops" has been submitted by the University of California at Davis to the Air Resources Board; and

WHEREAS, the Research staff has reviewed and recommended this proposal for approval; and

WHEREAS, the Research Screening Committee has reviewed and recommends for funding:

> Proposal Number 927-76 entitled "Effects of SO_2 and Ozone on Growth Productivity, Physiology and Biochemistry of Crops" submitted by the University of California at Davis for an amount not to exceed $126,746;

NOW, THEREFORE, BE IT RESOLVED, that the Air Resources Board pursuant to the authority granted by Health and Safety Code Section 39703 hereby accepts the recommendation of the Research Screening Committee and approves the following:

> Proposal Number 927-16 entitled "Effects of SO_2 and Ozone on Growth Productivity, Physiology and Biochemistry of Crops" submitted by the University of California at Davis for an amount not to exceed $126,746,

BE IT FURTHER RESOLVED, that the Executive Officer shall initiate administrative procedures and execute all necessary documents and contracts for the research effort proposed in an amount not to exceed $126,746.

I certify that the above is a true
and correct copy of Resolution 80-36
as passed by the Air Resources Board

Sally Rump

Sally Rump
Board Secretary

State of California
AIR RESOURCES BOARD

ITEM NO.: 80-7-3
DATE: April 24, 1980

ITEM: Research Proposal No. 927-76 entitled "Effects of SO_2 and Ozone on Growth Productivity, Physiology and Biochemistry of Crops".

RECOMMENDATION: Adopt Resolution 80-36 approving Research Proposal No. 927-76 for funding in an amount not to exceed $126,746.

SUMMARY: Much of the work that makes up our current understanding of how air pollution affects plants is derived from the study of rather simple end points such as visible foliar injury or the reduction in the overall weight of plant material at the end of a growing season. Such work has commonly been done under uncontrolled field conditions or in greenhouses. More recently, we and others have tried to consider more subtle factors like protein or carbohydrate content. What is proposed here is a major departure from the more traditional field or greenhouse studies. The proponent would apply potentially more sensitive plant physiological and biochemical methods in conjunction with careful control of environmental parameters to assure a straightforward assessment of effects. In effect, this study would investigate the cellular level implications of air pollution in terms of whole plant exposure. Sulfur dioxide and ozone are the pollutants of interest. They would be employed at several concentrations, both singly and in combination. As with cellular-level assessments of pollutant effects on animal systems, the information obtained would help explain related whole-plant effects. This would allow detection of changes before visible injury occurs and may provide data that can be readily extrapolated to other species.

This study is divided into three related efforts which address different facets of O_3 and SO_2 effects as a multi-disciplinary effort. In all cases the investigators intend to employ several different plant species and varieties within each specie to allow addressing of possible mechanisms for expected variation in sensitivity to the pollutants to be employed.

The first part of this study will concentrate on the effects of SO_2 and ozone on the germination and early development of seedlings. This would allow careful study of the effects of pollutants on the seedling stage of growth and contribute to an assessment of overall sensitivity of each variety tested. The amounts and types of proteins present would also be measured in seedlings that show abnormal growth.

The second part of the study would center on how exposure to SO_2 and ozone would affect leaf and root function in terms of water and solute movement. Air pollutants are known to affect the stomata of many plants. These act as the "first line of defense" for plants to prevent the entry of pollutants to less protected internal air space cell surfaces. Once inside, it is thought that the pollutants will have an effect on the metabolic activity of cells through effects on membrane function of such cells.

Finally, the third part of this study will concentrate on the biochemical effects of SO_2 on plants. It is the investigator's observation that SO_2 exposures initiate the release of "stress" ethylene and ethane in response to lipid peroxidation. Ethylene is also known to be produced in response to other stresses like physical injury.

Specifically the investigators would expose plants to varying amounts of SO_2 and measure the levels of "stress" ethylene and ethane. An attempt will be made to study whether the level of ethylene produced is related to the relative sensitivity of the plants employed. Efforts will also be made to determine if ethylene enhances or reduces the plant's tolerance to SO_2 through the use of agents known to block its production. The investigator would also study the fate of atmospheric SO_2 in soils, its uptake, metabolism and movement in the plant, by employing radio-chemical methods.

The results of these studies should provide valuable insight into the cellular level effects of pollutants on vegetation and improve our total understanding of the effects of pollutants on California crops.

State of California
AIR RESOURCES BOARD

Resolution 80-37

April 24, 1980

WHEREAS, the Air Resources Board is vested, under Section 39705 of the Health and Safety Code, with authority to appoint a Research Screening Committee composed of up to nine members with expertise in specified technical areas; and

WHEREAS, there now exist, as a result of recent resignations, three vacancies on the Research Screening Committee;

WHEREAS, Glen R. Cass, Assistant Professor of Environmental Engineering at the California Institute of Technology, is widely acknowledged as an expert in the fields of air quality control strategy design, air pollution source characteristics and control technologies, the fluid mechanical aspects of air quality modeling, energy resource management and the design and management of governmental regulatory programs;

NOW, THEREFORE BE IT RESOLVED that the Air Resources Board hereby appoints to full membership in its Research Screening Committee the following person, who has been found to meet all of the requirements set forth in Section 39705 of the Health and Safety Code:

Glen R. Cass, Ph.D.
Assistant Professor of
Environmental Engineering Science
California Institute of Technology

I certify that the above is a true
and correct copy of Resolution 80-37
as passed by the Air Resources Board

Sally Rump

Sally Rump
Board Secretary

GLEN R. CASS

EDUCATION

B.S.	Mechanical Engineering, University of Southern California (Summa Cum Laude), 1969
M.S.	Mechanical Engineering, Stanford University, 1970
Ph.D.	Environmental Engineering Science, California Institute of Technology, 1978. Thesis Topic: Sulfate Air Quality Management

PROFESSIONAL INTERESTS

Air quality control strategy design, energy resources management, air pollution source characteristics and control technology, fluid mechanics applied to air quality problems, design and management of governmental regulatory programs.

PROFESSIONAL EXPERIENCE

1978-present	Senior Research Fellow and Instructor in Environmental Engineering Science, California Institute of Technology. Member of the Research Staff of Caltech's Environmental Quality Laboratory
1978-present	Consultant, specializing in design of comprehensive emission control strategies which will attain or maintain compliance with air quality standards in a multiple source regional setting. Clients include the South Coast Air Quality Management District (formerly the Los Angeles Air Pollution Control District).
1973-77	Ph.D. Candidate in Environmental Engineering Science, California Institute of Technology. Research Assistantship, Environmental Quality Laboratory (1973-74, 1976-77), Barker Fellowship (1974-75), Rockwell International Fellowship (1975-76).
1974	Consultant to Institute of Industrial Launderers (part-time) on gaseous-fueled truck fleet problems.
1970-73	Commissioned Officer, U.S. Public Health Service. Loaned to U.S. Environmental Protection Agency, Region IV, Atlanta, Georgia. Program advisor to 18 state and local pollution control agencies in the Southeastern United States.
Summer 1969	Engineer, Naval Undersea Center, Pasadena, California. Worked on undersea internal combustion engine design.

COLLEGIATE SCHOLASTIC HONORS

Archimedes Circle Award (USC, 1969), Phi Kappa Phi, Tau Beta Pi, Pi Tau Sigma, Phi Eta Sigma, Sigma Xi, Sigma Nu Fraternity's Nationwide Scholar of the Year (1969).

COLLEGIATE LEADERSHIP HONORS

Order of the Palm (USC, 1969), Skull and Dagger (USC), Blue Key.

CURRENT COMMUNITY SERVICE

Clean Air Committee, Pasadena Lung Association.
Alumni Representative on a Student/Faculty Committee at USC.
President of a non-profit corporation which owns and operates student housing facilities at USC.

SPONSORED RESEARCH

The California Air Resources Board is supporting the Sulfate Air Quality Management Study at EQL under a major research contract. The project period is June 1976 through mid-1978. The proposal to the ARB was developed and written by me under the general supervision of the principal investigators, Professors Lees and Shair.

PUBLICATIONS AND CONFERENCE PAPERS

Methods for Sulfate Air Quality Management with Applications to Los Angeles, Ph.D. Thesis, California Institute of Technology, December 1977.

The Relationship between Sulfate Air Quality and Visibility at Los Angeles, Memorandum No. 18, Environmental Quality Laboratory, California Institute of Technology, August 1976.

Air Pollution Control Agency Behavior: Implementing Legal Mandates in an Uncertain World, presented at the CIT/IA Conference on Governmental Regulatory Policies, May 6-7, 1975.

Dimensions of the Los Angeles SO_x/Sulfate Problem, Memorandum No. 15, Environmental Quality Laboratory, December 1975. Presented at the Conference on Strategies for Air Pollution Control in the South Coast Air Basin, California Institute of Technology, December 2-3, 1975.

Lead as a Tracer for Automotive Particulates: Projecting the Sulfate Air Quality Impact of Oxidation Catalyst Equipped Cars in Los Angeles, Memorandum No. 12, Environmental Quality Laboratory, California Institute of Technology, May 1975.

Alternate Vehicle Fuels for the Industrial Laundry Industry, copyright by Research and Development Committee of the Institute of Industrial Launderers, October 1974, (with C. Almquist).

Cost and Performance of Automotive Emission Control Technologies, Memorandum No. 7, Environmental Quality Laboratory, California Institute of Technology, December 1973.

Air Pollution Control Agency Performance Evaluation, presented at the 66th Annual Meeting of the Air Pollution Control Association, June 24-28, 1973.

State of California
AIR RESOURCES BOARD

Resolution 80-38

July 23, 1980

WHEREAS, Section 39602 of the Health and Safety Code designates the Air Resources Board (ARB) as the air pollution control agency for all purposes set forth in federal law and designates the ARB as the state agency responsible for the preparation of the State Implementation Plan (SIP) required by the Clean Air Act;

WHEREAS, the Clean Air Act as amended in 1977 mandates the revision of the SIP in designated nonattainment areas of the state in order to assure the attainment and maintenance of national ambient air quality standards by specified deadlines;

WHEREAS, Health and Safety Code Sections 41500, 41504, 41650 and 41652 provide that the ARB shall adopt a locally prepared nonattainment plan and authorize the ARB to make such revisions to a nonattainment plan as are necessary to meet the requirement of the Clean Air Act;

WHEREAS, the ARB is the designated lead agency for the San Bernardino County nonattainment plan and has committed itself to a coordinated program for the development of the nonattainment plans for ozone with the active participation of other agencies possessing resources and expertise in the air quality and transportation fields;

WHEREAS, on November 29, 1979 the ARB resolved in Resolution 79-79, incorporated by reference herein, that the San Bernardino County APCD determinations of reasonably available control measures for regulating emissions from certain gasoline marketing operations do not meet the requirements of Section 172 of the Clean Air Act;

WHEREAS, the District's Rule 461 and 462 do not contain provisions as stringent as control measures adopted by other districts in the state;

WHEREAS, the San Bernardino County APCD Board at its July 7, 1980 hearing deleted proposed Stage I vapor recovery regulations from its agenda;

WHEREAS, the ARB finds:

1. That the state and national ambient air quality standards for photochemical oxidant (ozone) are exceeded in the San Bernardino County portion of the SEDAB;

2. That organic gases have been demonstrated to be a chemical precursor to photochemical oxidant (ozone), and contribute to or are responsible for exceedance of the state oxidant standard and the national ozone standard within the SEDAB;

3. That further increases in emissions of precursors will interfere with progress toward attainment of the national ambient air quality standard for ozone and of the state air quality standard for oxidant;

4. That the San Bernardino County APCD Rules 461 and 462 do not contain provisions adequate to meet Clean Air Act requirements regarding implementation of reasonably available control measures for regulating emissions from gasoline marketing operations (excluding vehicle fueling operations) in the designated nonattainment area of the District as expeditiously as practicable;

5. Rules 461 and 462 are not as effective as vapor recovery rules which are in effect in other districts in the state;

NOW THEREFORE BE IT RESOLVED, that the Board adopts new Rules 461.1 and 462.1 to be applicable in the portions of the District designated by the Environmental Protection Agency (EPA) as nonattainment for ozone, as set forth in Appendix A, such rules to take effect and to be submitted to EPA 90 days from this date unless the SBAPCD Board adopts rules found by the Executive Officer to be equally effective and adopted by the Executive Officer as a SIP revision prior to expiration of the 90 days, said rule then to be forwarded to the EPA.

BE IF FURTHER RESOLVED, that the Board approves Rules 461 and 462 as submitted by the SBAPCD for applicability in that portion of the District designated as attainment for ozone and directs the Executive Officer to forward the rules to EPA as a revision to the SIP.

BE IT FURTHER RESOLVED, that San Bernardino County APCD Rules 461.1 and 462.1 may subsequently be amended by the District, in accordance with the procedures set forth in 17 California Administrative Code Section 60008.1.

BE IT FURTHER RESOLVED, that to the extent that rules amended today are in conflict or are not consistent with any other provision of the affected District's rules and regulations, the provisions of the amended rules adopted July 23, 1980, shall prevail and shall have the same force and effect as a program, rule or regulation adopted by the District and shall be enforced by the District.

I certify that the above is
a true and correct copy of
Resolution 80-38, as adopted
by the Air Resources Board

Sally Rump

Sally Rump, Board Secretary

APPENDIX A
to Resolution 80-38

Proposed for Adoption
June 25, 1980

Revised
July 23, 1980

RULE 461.1 Gasoline Transfer and Dispensing In the Federal Environmental Protection Agency Designated Nonattainment Area

(a) Gasoline Transfer Into Stationary Storage Containers

(1) A person shall not transfer or permit the transfer of gasoline from any tank truck, trailer or railroad tank car into any stationary storage container with a capacity of more than 950 liters (251 gallons) unless such cantainer is equipped with a permanent submerged fill pipe and unless 95 percent by weight of the gasoline vapors displaced during the filling of the stationary storage container are prevented from being released to the atmosphere.

(2) The provisions of this Section shall be subject to the following exceptions:

(A) The transfer of gasoline into any stationary storage container used primarily for the fueling of implements of husbandry as such vehicles are defined in Division 16 (Section 36000 et seq.) of the California Vehicle Code, if such container is equipped with a permanent submerged fill pipe.

(B) The transfer of gasoline into any stationary storage container having a capacity of 2,000 gallons or less which was installed prior to July 1, 1980, if such container is equipped with a permanent submerged fill pipe.

(C) The transfer of gasoline into any stationary storage container in existence prior to July 1, 1980 when such container is served by a delivery vessel exempted by the Air Pollution Control Officer pursuant to Section b(2) of Rule 462.1 if such container is equipped with a permanent submerged fill pipe.

(D) The transfer of gasoline into any stationary storage container which the Air Pollution Control Officer finds is equipped with equipment to control emissions at least as effectively as required by this Section.

(E) The transfer of gasoline into any stationary storage container in existence prior to July 1, 1980 which is equipped with an offset fill pipe.

(F) The transfer of gasoline into any stationary storage container not exempted by Section a(2)(A), a(2)(B), a(2)(C), a(2)(D), or (2)(e) at any gasoline dispensing facility installed prior to the effective date of this regulation for which the total monthly throughput of the facility does not exceed 9,000 gallons, provided that the owner or operator of such dispensing facility transfers or permits the transfer of gasoline from any delivery vessel (i.e., tank truck or trailer) into any stationary storage container with a capacity of more than 250 gallons only if such container is equipped with a permanent submerged fill pipe and only if 90 percent by weight of the gasoline vapors displaced during the filling of the stationary storage container are prevented from being released to the atmosphere.

(3) No person shall store gasoline in or otherwise use or operate any gasoline delivery vessel unless such vessel is designed and maintained to be vapor tight. Any delivery vessel into which gasoline vapors have been transferred shall be filled only at a loading facility that is equipped with a system that prevents at least 95 percent by weight of the gasoline vapors displaced from entering the atmosphere.

(4) Other Provisions

(A) A person shall not install any gasoline storage container with a capacity of more than 950 liters (250 gallons) unless such container meets the provisions of this rule.

(B) Vapor return of vapor recovery systems used to comply with the provisions of this rule shall comply with all safety. fire, weights and measures, and other applicable codes or regulations.

(5) Definitions

For purposes of this rule, the following definitions are included:

(A) "Gasoline vapors" means the organic compounds in the displaced vapors including any entrained liquid gasoline.

(B) A "motor vehicle" is any self-propelled vehicle registered for use on the highways.

(C) For the purposes of this Rule, the term "submerged fill pipe" is defined as any fill pipe, the discharge opening of which is entirely submerged when the liquid level is 6 inches above the bottom of the container. "Submerged fill pipe" when applied to a container which is loaded from the side is defined as any fill pipe the discharge opening of which is entirely submerged when the liquid level is 18 inches above the bottom of the container.

(D) For the purposes of this Rule, the term "gasoline" is defined as any petroleum distillate having a Reid vapor pressure of 4 pounds or greater.

(6)(A) The owner or operator of any stationary storage container or gasoline loading facility subject to this Rule or Rule 462.1 which is operating or in the process of being installed or constructed prior to July 1, 1980 shall comply with the provisions of this Rule by October 1, 1981, and shall comply with the following schedule:

(i) By February 1, 1981 - Apply for an authority to construct from the Air Pollution Control Officer for the installation of the needed control system;

(ii) By April 1, 1981 - Submit to the Air Pollution Control Officer evidence that all necessary contracts for the design, procurement, and installation of the required emission control system have been negotiated and signed,

RULE 462.1 Organic Liquid Loading in the Federal Environmental Protection Agency Designated Nonattainment Area

(a) Facilities Handling 75,700 liter (20,000 gallons) Per Day or More

(1) A person shall not load organic liquids having a vapor pressure of 77.5 milimeters of mercury (1.5 psia) or greater under actual loading conditions into any tank truck, trailer or railroad tank car from any loading facility having a throughput of 75,700 liters (20,000 gallons) or more in any one day, unless the loading facility is equipped with a vapor collection and disposal system or its equivalent approved by the Air Pollution Control Officer.

(2) Loading shall be accomplished in such a manner that the displaced vapor and air will be vented only to the vapor collection system. Measures shall be taken to prevent liquid drainage from the loading device when it is not in use or to accomplish complete drainage before the loading device is disconnected.

(3) The vapor disposal portion of the vapor collection and disposal system shall consist of one of the following:

(A) An adsorber system or condensation system which processes all the displaced vapor and which limits the emission of gasoline vapors and gases to no more than:

(i) 0.6* pounds per thousand gallons of gasoline transferred for installations made after July 1, 1980, or

(ii) 0.9* pounds per 1,000 gallons of gasoline transferred for installations existing prior to January 1, 1972,

*As determined by rounding to the nearest tenth using two significant figures,

and 0.6* pounds for 1,000 gallons of gasoline transferred for these existing installations by July 1, 1982, or

(iii) 0.9* pounds per 1,000 gallons of gasoline transferred for installations existing prior to July 1, 1980, and installed after January 1, 1972, and 0.6* pounds per 1,000 gallons of gasoline transferred for these existing installations by July 1, 1985.

(B) A vapor handling system which directs the displaced vapors to a fuel gas system.

(C) Other equipment of an efficiency equal to or greater than (A) or (B) if approved by the Air Pollution Control Officer.

(b) Facilities Handling Less Than 75,700 liters (20,000 gallons) Per Day.

(1) Any facility that was in operation prior to January 9, 1976, that distributes 2,838,750 liters (750,000 gallons) or more of gasoline annually to storage vessels not exempted under Sections (a) (2) (A) and (a) (2) (B) of Rule 461.1, but less than a total of 75,700 liters (20,000 gallons) of gasoline in any one day shall return all the vapors displaced from the delivery vessel back to the stationary storage container. Stationary storage containers at the facility are to comply with the requirements of sections (b) (2) (B) and (b) (2) (C).

(2) Any facility in operation prior to January 9, 1976, that distributes less than 75,700 liters (20,000 gallons) of gasoline in any one day shall be exempt from the provisions of this rule provided that:

(A) Less than 2,838,750 liters (750,000 gallons) per year are distributed to storage vessels, not exempted under Section (a)(2)(A) and (a)(2)(B) of Rule 461.1;

(B) All gasoline is loaded into transport vessels through a fill pipe, the discharge opening of which is submerged when the liquid level is 8 centimeters (3.15 inches) above the bottom of the vessel;

(C) The facility is equipped with a system or systems to prevent the release to the atmosphere of at least 95 percent by weight of the gasoline vapors displaced during the filling of the facility's stationary storage containers;

(D) The faiclity is equipped with a pressure-vacuum valve on the above ground stationary storage containers with a minimum pressure valve setting of 8 ounces provided that such setting will not exceed the container's maximum pressure rating.

(E) The owner or operator of the facility petitions the Air Pollution Control Officer annually for this exemption to have the facility's transport vessels and other independently owned transport vessels which are exclusively serviced at such facility exempted.

(3) Any such facility constructed or installed on or after January 9, 1976, irrespective of throughput, shall comply with the provisions of Section (b)(1) and shall not be eligible for the exemption in Section (b) (2).

State of California

Memorandum

To : Huey D. Johnson
Secretary
Resources Agency

Date : August 11, 1980

Subject : Filing of Notice of Decision of the Air Resources Board

From : Air Resources Board

Pursuant to Title 17, Section 60007(b), and in compliance with Air Resources Board certification under section 21080.5 of the Public Resources Code, the Air Resources Board hereby forwards for posting the attached notice of decision and response to environmental comments raised during the comment period.

Sally Rump

Sally Rump
Board Secretary

attachments
Resolution 80-49

RECEIVED BY
Office of the Secretary
AUG 12 1980
Resources Agency of California

State of California
AIR RESOURCES BOARD

Resolution 80-38

July 23, 1980

WHEREAS, Section 39602 of the Health and Safety Code designates the Air Resources Board (ARB) as the air pollution control agency for all purposes set forth in federal law and designates the ARB as the state agency responsible for the preparation of the State Implementation Plan (SIP) required by the Clean Air Act;

WHEREAS, the Clean Air Act as amended in 1977 mandates the revision of the SIP in designated nonattainment areas of the state in order to assure the attainment and maintenance of national ambient air quality standards by specified deadlines;

WHEREAS, Health and Safety Code Sections 41500, 41504, 41650 and 41652 provide that the ARB shall adopt a locally prepared nonattainment plan and authorize the ARB to make such revisions to a nonattainment plan as are necessary to meet the requirement of the Clean Air Act;

WHEREAS, the ARB is the designated lead agency for the San Bernardino County nonattainment plan and has committed itself to a coordinated program for the development of the nonattainment plans for ozone with the active participation of other agencies possessing resources and expertise in the air quality and transportation fields;

WHEREAS, on November 29, 1979 the ARB resolved in Resolution 79-79, incorporated by reference herein, that the San Bernardino County APCD determinations of reasonably available control measures for regulating emissions from certain gasoline marketing operations do not meet the requirements of Section 172 of the Clean Air Act;

WHEREAS, the District's Rule 461 and 462 do not contain provisions as stringent as control measures adopted by other districts in the state;

WHEREAS, the San Bernardino County APCD Board at its July 7, 1980 hearing deleted proposed Stage I vapor recovery regulations from its agenda;

WHEREAS, the ARB finds:

1. That the state and national ambient air quality standards for photochemical oxidant (ozone) are exceeded in the San Bernardino County portion of the SEDAB;

2. That organic gases have been demonstrated to be a chemical precursor to photochemical oxidant (ozone), and contribute to or are responsible for exceedance of the state oxidant standard and the national ozone standard within the SEDAB;

RECEIVED BY
Office of the Secretary

AUG 12 1980

Resources Agency of California

State of California

AIR RESOURCES BOARD

Response to Significant Environmental Issues

Item: Public Hearing to Consider Amending the Rules and Regulations of Imperial County Air Pollution Control District, Los Angeles County Air Pollution Control District and San Bernardino County Air Pollution Control District

Public Hearing Date: July 23, 1980

Response Date: July 23, 1980

Issuing Authority: Air Resources Board

Issue: No adverse environmental impacts identified in staff report or in public testimony.

Response: N/A

CERTIFIED: Sally Rump

Date:

RECEIVED BY
Off ary
AUG 1 2 1980
Resou ... ifornia

State of California
AIR RESOURCES BOARD

OPPOSING CONSIDERATIONS AND AGENCY RESPONSE

July 23, 1980

Public Hearing to Consider Amending the Rules and Regulations of Imperial County Air Pollution Control District, Los Angeles County Air Pollution Control District and San Bernardino County Air Pollution Control District

San Bernardino County APCD

1. Opposing Consideration:

   Staff proposal for amendments to Rules 461 and 462 should not be applied in the attainment areas of the District.

   Response: Staff concurs and recommends that the Board make the proposed amendments effective only in the nonattainment area portion of the District by adopting Rules 461.1 and 462.1 for those areas.

2. Opposing Consideration:

   The staff-proposed exemption for bulk plants is too restrictive and not feasible for the District in that it would require inordinately high control cost for small bulk plants.

   Response: Staff concurs and recommends that the exemption of 500,000 gallons per year throughput to nonexempt sources be increased to 750,000 gallons per year.

3. Opposing Consideration:

   The proposed rule goes beyond the minimum Clean Air Act requirements for rural nonattainment areas.

Response: The minimum Clean Air Act requirements for nonattainment areas are that all reasonably available control measures be adopted and implemented, as expeditiously as practicable (Sections 172(b)(2)(3)) and staff report demonstrates that the proposed control measures are currently reasonably available.

4. Opposing Consideration:

Because the impact of transported pollutants on the air quality in the District is not known, the impact on the amount of emission reductions required to achieve the ozone ambient air quality standard in the District is also not known; the action should be deferred until the impact of transport can be quantified.

Response: Staff proposes to work with the District to quantify the impact of transport. However, this is not sufficient reason to postpone adoption of a well-demonstrated, reasonably available, legally required control measure.

5. Opposing Consideration:

Additional time is needed for the District to develop its own control measures.

Response: Staff concurs with concept, and recommends that the Board adopt the staff-recommended measures to be effective in 90 days, thus providing the District with 90 days to take action to adopt its own acceptable control measures.

Imperial County APCD

Opposing Consideration:

The Western Oil and Gas Association's written testimony objects to the proposed amendements to two of Imperial County's Stage I vapor recovery rules -- 415 for gasoline storage tanks and 415.1 which applies to bulk plants and terminals with daily throughputs of more than 20,000 gallons. WOGA objects to these amendments because 1) they are not required to assure EPA approval of the nonattainment plans and 2) the Board has not justified changing the rules simply to achieve state standards.

That Imperial County rules amendments are not required is supported by EPA's review of the Imperial County Plan and EPA's findings that:

(1) An approvable plan for a rural area must include adopted, legally enforceable regulations which reflect the application of RACT for those major stationary sources with over 100 tons/year potential emissions.

(2) Imperial County is a rural area and its rules meet the requirements for a rural area plan.

Response: The Air Resources Board will not be adopting the language objected to by the WOGA. Consideration of the proposed amendments for the Imperial County rules has been postponed to provide additional time for Imperial County to make the necessary rule changes.

State of California
AIR RESOURCES BOARD

Resolution 80-39

May 22, 1980

WHEREAS, the Air Resources Board (Board) and/or the federal Environmental Protection Agency have set health-based ambient air quality standards for nitrogen dioxide, oxidant (ozone), particulate (TSP), and visibility which are consistently exceeded in several of the state's air basins, notably the South Coast Air Basin; and

WHEREAS, Health and Safety Code Sections 39003, 39500, 39602, and 41500 authorize the state Board to coordinate, encourage, and review efforts to attain and maintain state and national ambient air quality standards; and

WHEREAS, Health and Safety Code Sections 39600 and 39605 authorize the state Board to do such acts as may be necessary to execute the powers and duties granted to and imposed upon the state Board, to assist the air pollution control districts, and to hold public hearings; and

WHEREAS, the California Environmental Quality Act and ARB regulations require that an activity not be adopted as proposed if mitigation measures or alternatives exist which would substantially reduce any significant adverse environmental effects of the proposed activity, and further require that the Board respond in writing to significant environmental issues raised; and

WHEREAS, the Board, after at least 30 days notice, has held two public meetings on this matter, and has heard and considered the evidence and testimony presented by the ARB staff, affected industries and utilities, and other interested persons at the two meetings held on November 29 and 30, 1979 and May 21 and 22, 1980; and

WHEREAS, the Board finds:

1. That emissions of oxides of nitrogen (NOx) from stationary internal combustion engines contribute significantly to exceedances of the state and national ambient standards for nitrogen dioxide (NO_2), oxidant (ozone), TSP, and visibility in several of the state's air basins;

2. That such NOx emissions are not currently subject to air pollution control measures;

3. That reductions in NOx emissions from this source to approximately one-tenth the present emission rate are technologically feasible and cost-effective;

4. That amendments proposed for the suggested control measure by the staff in response to written and oral testimony adequately address concerns regarding compliance dates, retrofit of controls on existing engines, cogeneration, and exemptions;

5. That the evidence suggests that the fuel penalty associated with the control measure is more likely to be in the range of 3-5% than at the substantially greater levels alleged by some utility representatives, and that this fuel penalty has been taken into consideration by the Board, along with other costs, when assessing the cost-effectiveness of the control strategy;

6. That the staff-predicted fuel penalty is further justified by the substantial air quality benefits which would result from implementation of the suggested control measure;

7. That the amount of additional water needed for water injection systems which control NOx emissions is insignificant and is justified by the air quality benefits to be obtained from such use;

8. That in some instances, the use of NOx emission control devices will cause increases in carbon monoxide (CO) emissions from stationary internal combustion engines and that such CO emissions should be controlled in order to assure maintenance of ambient CO standards;

9. That control of CO emissions from this source, as required by the suggested control measure, is technologically feasible and economically reasonable;

10. That the staff report adequately responds to other environmental issues raised and the Board concurs in the staff's finding that no significant adverse effects on air quality are likely to result from adoption and implementation of the suggested control measure as amended.

NOW, THEREFORE, BE IT RESOLVED, that the Air Resources Board approves and adopts the suggested control measure for the control of NOx emissions from stationary internal combustion engines as amended and set forth as Attachment A to this resolution;

BE IT FURTHER RESOLVED, that the Executive Officer is directed to forward the suggested control measure to districts needing reductions in NOx emissions to achieve and maintain state and/or national ambient air quality standards with a recommendation that these districts adopt a rule of equivalent effectiveness and modify their permit rules and regulations to delete present exemptions for stationary internal combustion engines.

BE IT FURTHER RESOLVED, that the aforementioned districts are requested to repeal existing exemptions for stationary internal combustion engines from CO emission limitations, or establish limitations of equivalent effectiveness as those set forth in the suggested control measure where limitations do not currently exist;

BE IT FURTHER RESOLVED, that the Board recommends that in considering the adoption of the attached suggested control measure, districts should consider the economic problems of small businesses and other problems of local concern and should afford appropriate relief which does not significantly reduce the effectiveness of the measure.

BE IT FURTHER RESOLVED, that the Executive Officer is directed to provide assistance to any district requesting assistance in adopting, interpreting, or implementing the suggested control measure;

BE IT FURTHER RESOLVED, that the Board recommends that each district adopting the suggested control measure conduct a hearing, upon receipt of a petition from an affected party, to consider a delay of not more than one year in the compliance dates for "lean burn" engines if the district finds that the technology needed to comply with the measure does not perform adequately despite the good faith efforts of the engine manufacturers and users.

BE IT FURTHER RESOLVED, that if significant adverse environmental effects, including the emission of high concentrations of ammonium nitrate, ammonia, hydrogen cyanide, or nitrosamines, become apparent before or during operation of the control equipment utilized to comply with this suggested control measure once it is adopted into regulatory form by the relevant districts, the Board will consider the adoption of mitigation measures or other appropriate action to reduce such adverse impacts.

I certify that the above is a true and correct copy of Resolution 80-39 as passed by the Air Resources Board.

Diane R. Pearson
for Board Secretary

SUGGESTED CONTROL MEASURE FOR THE CONTROL OF OXIDES OF NITROGEN EMISSIONS FROM STATIONARY INTERNAL COMBUSTION ENGINES

Within the boundaries of the _____district, no person shall operate a stationary internal combustion engine that discharges oxides of nitrogen into the atmosphere in excess of the limits specified in the following table:

Existing Engines	NOx (Calculated as NO_2)	Effective Date
Diesel cycle	90% Reduction Across Control Device or 0.28 µg/J output whichever is less stringent	January 1, 1984
Otto cycle engines that can be adjusted to run with an exhaust stream O_2 concentration <1%	90% Reduction Across Control Device or 0.28 µg/J output whichever is less stringent	January 1, 1983
Otto cycle engines that cannot be adjusted to run with an exhaust stream O_2 concentration <1%	90% Reduction Across Control Device or 0.28 µg/J output whichever is less stringent	January 1, 1984
Brayton cycle	0.28 µg/J output	January 1, 1983
New Engines		
Brayton cycle	0.28 µg/J output	January 1, 1983
Diesel cycle	0.28 µg/J output	January 1, 1983
Otto cycle engines that can be adjusted to run with an exhaust stream O_2 concentration <1%	0.28 µg/J output	January 1, 1982
Otto cycle engines that cannot be adjusted to run with an exhaust stream O_2 concentration <1%	0.28 µg/J output	January 1, 1983

All emissions determinations shall be made at any load conditions chosen by the Air Pollution Control Officer within the range stated in the permit to operate, other than low load or idle, using EPA Method 20 for gas turbines and the amended EPA Method 20 for reciprocating engines.

For the purpose of this control measure, the output shall be defined as the shaft output from the internal combustion engine plus the energy reclaimed by any heat recovery system. Quantification of output shall be the responsibility of the engine owner to the satisfaction of the Air Pollution Control Officer.

Exemptions

-- All internal combustion engines that are operated less than 100 hours per year for testing, and 1) are only used for power when normal mechanical or electrical power service fails, or 2) are only used for the emergency pumping of water or 3) are used only for the production of power during Stage II and Stage III alerts as defined in California's Electrical Emergency Plan.
-- All internal combustion engines that are laboratory engines used in research or teaching programs.
-- All internal combustion engines that are operated for the purposes of performance verification.
-- All gas turbines that are used for the production of electric power and are owned by a private or public utility as defined by the California Public Utilities Commission.
-- All existing Otto and diesel cycle engines with a total displacement less than 1700 cubic centimeters (104 in^3).

State of California

Memorandum

To : Huey D. Johnson
Secretary
Resources Agency

Date : June 6, 1980

Subject: Filing of Notice of Decision of the Air Resources Board

From : **Air Resources Board**

Pursuant to Title 17, Section 60007(b), and in compliance with Air Resources Board certification under Section 21080.5 of the Public Resources Code, the Air Resources Board hereby forwards for posting the attached notice of decision and response to environmental comments raised during the comment period.

Diana R. Pencin

Diana Pencin
Acting Board Secretary

Attachments
Resolution 80-39

State of California
AIR RESOURCES BOARD

Response to Significant Environmental Issues

Public Meeting to Consider Suggested Control Measure for the Control of Oxides of Nitrogen Emissions from Stationary Internal Combustion Engines.

Public Meeting Date: May 21 and 22, 1980

Response Date: May 22, 1980

Issuing Authority: Air Resources Board

Comment: The comments are contained in the staff report dated April 4, 1980.

Response: The Board's response is contained in Resolution 80-39, numbers 5 thru 10.

Certified: Diana P. Pearson
for Board Secretary

Date: June 6, 1980

State of California

AIR RESOURCES BOARD

Supplement Staff Report Regarding Significant Environmental Issues

Public Meeting to Consider Suggested Control Measure for the Control of Oxides of Nitrogen Emissions from Stationary Internal Combustion Engines.

80-9-3

Date of Release: April 4, 1980
Scheduled for Consideration: May 21, 1980

1. Discussion

Section 60007 of the Board's regulations in Title 17, California Administrative Code, directs staff to report to the Board regarding environmental issues raised by public comments, for consideration by the Board on any matter for which a public hearing is required.

The environmental issues are discussed in the staff report dated April 4, 1980.

2. Recommendation

The staff recommends that the Board adopt, before it takes any final action on this item, the attached proposed Response to Significant Environmental Issues.

RECEIVED BY
Office of the Secretary

OCT 20 1980

Resources Agency of California

State of California
AIR RESOURCES BOARD

Resolution 80-40

July 23, 1980

WHEREAS, Section 39601 of the Health and Safety Code authorizes the Air Resources Board to adopt standards, rules, and regulations necessary for the proper execution of the powers and duties granted to and imposed upon the Board by law;

WHEREAS, Section 43107 of the Health and Safety Code authorizes the Board to adopt emission standards and test procedures in order to control or eliminate air pollution caused by motorcycles;

WHEREAS, the motorcycle manufacturers have petitioned the Board to consider amending the 1982 1.0 gram per kilometer hydrocarbon exhaust emission standard;

WHEREAS, the Air Resources Board staff has conducted a series of confidential workshops with the manufacturers in order to assess the Motorcycle industry's progress toward meeting the 1.0 g/Km HC standard;

WHEREAS, the Board finds that the 1.0 g/Km HC standard for Class I and II motorcycles is technologically feasible and cost effective for 1982;

WHEREAS, the Board finds that implementing the 1.0 g/Km hydrocarbon standard in 1982 for Class I and II motorcycles will not create a economic burden on the motorcycle manufacturers, or significantly disrupt the availability of smaller displacement motorcycles in the California market in 1982;

WHEREAS, the Board finds that implementing a 1.0 g/Km hydrocarbon standard for Class III motorcycles in 1982 will create an economic and technological hardship on the industry which may result in an economic disruption of the California motorcycle market;

WHEREAS, the Board finds that for Class III motorcycles an exhaust emission standard of 2.5 g/Km HC for the 1982 and 1983 model years will be attainable by the industry, allow the manufacturers more time to develop emission control systems to meet more stringent standards, and prevent economic disruptions and burdens on the marketplace;

WHEREAS, the Board finds that there may be a need to provide an exhaust emission standard for small volume manufacturers of up to 5.0 g/Km HC for 1982 model year Class I and II motorcycles, provided that such manufacturers develop emission control technology to meet more stringent standards in the future;

WHEREAS, the California Environmental Quality Act and Board regulations require that no project having adverse environmental impacts be adopted as originally proposed if feasible alternatives or mitigation measures are available;

WHEREAS, the Board has quantified the air quality impacts by the proposed action and finds that such impacts are minimal and that feasible mitigation measures are not available;

WHEREAS, the Board finds that the proposed standards are more stringent than applicable federal standards;

WHEREAS, a public hearing and other administrative proceedings have been held in accordance with the provisions of the Administrative Procedure Act (Government Code, Title 2, Division 3, Part 1, Chapter 4.5);

NOW, THEREFORE, BE IT RESOLVED, that the Board hereby amends Section 1958, Article 2, Subchapter 1, Chapter 3 of Title 13, California Administrative Code as follows:

Amend Subsection (b) to read:

(b) Exhaust emissions from new street-use motorcycles, subject to registration and sold and registered in this state, shall not exceed:

Exhaust Emission Standards
(grams per kilometer)

Model-Year	Engine Displacement (in cubic centimeters)	Hydrocarbon	Carbon Monoxide
1978 to 1979	50 to less than 170	5.0	17
	170 to less than 750	5.0 + 0.0155 (D-170)*	17
	750 or greater	14	17
1980 to 1981	All (50 cc or larger)	5.0	12
1982 and Subsequent	~~All~~ (50 cc ~~or larger~~ to 279 cc)	1.0	12
1982 and 1983	280 cc or greater	2.5	12
1984 and Subsequent	280 cc or greater	1.0	12

* D = engine displacement of motorcycles in cubic centimeter

Amend Subsection (f) to read:

~~(f) In the event that the federal test procedures referred to in paragraph (c) are found to be invalid or unenforceable, the "California Exhaust Emission Standards and Test Procedures for 1978 and Subsequent Production Motorcycles", as amended February 20, 1976, shall govern, except that the motorcycles to which such test procedures apply shall be those defined in subparagraph (a). In the event that only a portion of the federal test procedures are found to be invalid or unenforceable, then the equivalent portion of the California test procedures shall govern.~~

(f) Motorcycle manufacturers shall submit directly to the Executive Officer a complete copy of the application for certification for 1982 and subsequent model years. In the test procedures referred to in subsection (c) the word "Administrator": means Executive Officer of the Air Resources Board.

BE IT FURTHER RESOLVED AND ORDERED, that the Executive Officer be delegated the authority to set an exhaust emission standard of up to 5.0 grams per kilometer for 1982 only. This standard shall be applicable only to small volume manufacturers defined as one which sells less than three thousand (3000) new units per year in the State of California.

BE IT FURTHER RESOLVED AND ORDERED, that the Executive Officer be delegated the authority to incorporate changes to the "California Evaporative Emission Standards and Test Procedures for 1978 and Subsequent Model Gasoline-Powered Motor Vehicles" to provide an alternative evaporative emission control system durability testing requirement for motorcycles when the evaporative and exhaust emission standard changes do not coincide. This requirement shall be consistent with the automobile durability testing requirements.

BE IT FURTHER RESOLVED, that the Board hereby determines that the exhaust emission standards adopted herein are, in the aggregate, at least as protective of public health and welfare as applicable federal standards.

I certify that the above is a true and correct copy of Resolution 80-40, as adopted by the Air Resources Board.

Sally Rump

BOARD SECRETARY

State of California

Memorandum

RECEIVED BY
Office of the Secretary

OCT 20 1980

Resources Agency of California

To : Huey D. Johnson
Secretary
Resources Agency
1416 - 9th Street
Sacramento, CA 95814

Date : July 1, 1980

Subject: Filing of Notice of Decision of the Air Resources Board

From : **Air Resources Board**

Pursuant to Title 17, Section 60007(b), and in compliance with Air Resources Board certification under section 21080.5 of the Public Resources Code, the Air Resources Board hereby forwards for posting the attached notice of decision and response to environmental comments raised during the comment period.

Sally Rump

Sally Rump
BOARD SECRETARY

att: Resolution 80-40

RECEIVED BY
Office of the Secretary

OCT 20 1980

Resources Agency of California

State of California
AIR RESOURCES BOARD

Response to Significant Environmental Issues

Item: Response to the Motorcycle Manufacturers' Petition Requesting the Board Reevaluate the 1.0 Gram per Kilometer Exhaust Emissions Standard for 1982 and Subsequent Model Year Motorcycles

Public Hearing Dates: June 26, 1980 and July 23, 1980

Response Date: June 26, 1980

Issuing Authority: Air Resources Board

Comment: None

Response: None

CERTIFIED: Sally Rump
Board Secretary

Date: 6/26/80

State of California

AIR RESOURCES BOARD

Resolution 80-41

WHEREAS, the Air Resources Board has been directed to carry out an effective research program in conjunction with its efforts to combat air pollution, pursuant to Health and Safety Code Sections 39700 through 39705;

WHEREAS, an unsolicited research Proposal Number 929-76 entitled "In Vivo Fate of Nitrogenous Air Pollutant Derivatives" has been submitted by the University of California at Davis to the Air Resources Board; and

WHEREAS, the Research staff has reviewed and recommended this proposal for approval; and

WHEREAS, the Research Screening Committee has reviewed and recommends for funding:

> Proposal Number 929-76 entitled "In Vivo Fate of Nitrogenous Air Pollutant Derivatives" submitted by the University of California at Davis for an amount not to exceed $115,986;

NOW, THEREFORE, BE IT RESOLVED, that the Air Resources Board pursuant to the authority granted by Health and Safety Code Section 39703, hereby accepts the recommendation of the Research Screening Committee and approves the following:

> Proposal Number 929-76 entitled "In Vivo Fate of Nitrogenous Air Pollutant Derivatives" submitted by the University of California at Davis for an amount not to exceed $115,986,

BE IT FURTHER RESOLVED, that the Executive Officer shall initiate administrative procedures and execute all necessary documents and contracts for the research effort proposed in an amount not to exceed $115,986.

I certify that the above is a true and correct copy of Resolution 80-41 as passed by the Air Resources Board.

Sally Rump

Sally Rump
Board Secretary

State of California
AIR RESOURCES BOARD

ITEM NO.: 80-11-5a(1)
DATE: June 25, 1980

ITEM: Research Proposal No. 929-76 entitled "In Vivo Fate of Nitrogenous Air Pollutant Derivatives."

RECOMMENDATION: Adopt Resolution 80-41 approving Research Proposal No. 929-76 for funding in an amount not to exceed $115,986.

SUMMARY: Nitrogenous air pollutants include an extremely wide range of compounds: nitric oxide, nitrogen dioxide, nitrogen trioxide, dinitrogen trioxide, nitrogen pentoxides, nitrates, nitrites, nitric acid, countless organic nitro compounds, nitramines, and nitrosamines. For the most part, nitrogen oxide is the precursor of the entire photochemical sequence of the materials. Some are directly emitted through natural or industrial processes and particulate nitrogenous materials account for a significant portion of Hi-Vol samples taken from urban air.

This proposal is submitted to extend and complete a three-year research study of the biochemical and distributional fates of inhaled nitrates and nitrites. It would be directed toward specific goals to:

1. Study the biochemical and distributional aspects of carrier added NO_2^- and NO_3^- following inhalation,

2. Compare the biochemical and distributional aspects of carrier added NO_2^- and NO_3^- administered via the blood, digestive, and pulmonary systems,

3. Compare interspecies, in-vivo biochemistry of inhaled NO_2^- and NO_3^-,

4. Compare chronic vs. acute pathways and effects,

5. Study the role of certain potential NO_2^- and NO_3^- metabolic inhibitors, and

6. Prepare and study the metabolism of labeled organic nitrates and nitrosamines.

An important element of this effort is that it would provide an interspecies comparison of biochemical activity and allow a detailed look at how the materials affect mice. This has not been possible until recently due to the limited size of samples that can be taken from mice. The improvement in methods centers around making more active tracers. The importance of further mouse work is that large amounts of information dealing with toxicology and metabolisms of various compounds exists for mice.

State of California

AIR RESOURCES BOARD

Resolution 80-42

WHEREAS, the Air Resources Board has been directed to carry out an effective research program in conjunction with its efforts to combat air pollution, pursuant to Health and Safety Code Sections 39700 through 39705;

WHEREAS, an unsolicited research Proposal Number 925-76 entitled "Respirable Environmental Particulates In Humans" has been submitted by the University of California at San Diego to the Air Resources Board; and

WHEREAS, the Research staff has reviewed and recommended this proposal for approval; and

WHEREAS, the Research Screening Committee has reviewed and recommends for funding:

> Proposal Number 925-76 entitled "Respirable Environmental Particulates In Humans" submitted by the University of California at San Diego for an amount not to exceed $120,921;

NOW, THEREFORE, BE IT RESOLVED, that the Air Resources Board pursuant to the authority granted by Health and Safety Code Section 39703, hereby accepts the recommendation of the Research Screening Committee and approves the following:

> Proposal Number 925-76 entitled "Respirable Environmental Particulates In Humans" submitted by the University of California at San Diego for an amount not to exceed $120,921,

BE IT FURTHER RESOLVED, that the Executive Officer shall initiate administrative procedures and execute all necessary documents and contracts for the research effort proposed in an amount not to exceed $120,921.

I certify that the above is a true and correct copy of Resolution 80-42 as passed by the Air Resources Board

Sally Rump

Sally Rump
Board Secretary

State of California
AIR RESOURCES BOARD

ITEM NO: 80-11-5a(2)
DATE: June 25, 1980

ITEM: Research Proposal No. 925-76 entitled "Respirable Environmental Particulates in Humans."

RECOMMENDATION: Adopt Resolution 80-42 approving Research Proposal No. 925-76 for funding in an amount not to exceed $120,921.

SUMMARY: Both the State and federal governments have recognized the need to address the health implications of inhaled fine particles in terms of an ambient standard. It is felt that reliance on current TSP measurements and the associated ambient air quality standard may not provide meaningful protection from the health hazards that fine particles might pose.

Present considerations are directed toward atmospheric particles of two size regimes, respirable particles below about 2.5 microns and inhalable particles between about 2.5 microns and 15 microns. Attempts to date to settle on a numeric standard for either size fraction have been difficult. The key area of uncertainty centers on a lack of understanding of the size composition of particles and how this influences their health impacts.

The purpose of this proposal is to gather the data mentioned above and try to relate it to actual disease states. Previous work by the proponent has shown elevated particle loading associated with certain diseases and he postulates an association between particles of everyday environmental origin and certain types of lung disease. In carrying out this study, the proponent would employ human lung tissues and cells collected from human subjects. Subjects and tissues would be selected from those with residence histories in Los Angeles and San Diego in particular.

Two basic lines of research are proposed. The first would be carried out on both healthy subjects and subjects with lung disease for the Los Angeles and San Diego areas. Efforts will center on removal of alveolar macrophages from the lung and analyzing the physical and chemical nature of the particles they contain. These cells function as an important actor in the process of particle removal from the deep lung. The second portion of this study consists of obtaining tissue samples from

children and adult subjects who have suffered from specific types of lung disease thought to be associated with increased particle numbers in regions of the lung. Information would be gained on the numbers, sizes, types, and composition of particles in these tissues.

Detailed information on possible confounding occupational and smoking factors will be gathered on all subjects to allow more meaningful study of environmental pollutant exposures.

This study will provide valuable information which will be useful in establishing a fine particle standard.

State of California

AIR RESOURCES BOARD

Resolution 80-43

WHEREAS, the Air Resources Board has been directed to carry out an effective research program in conjunction with its efforts to combat air pollution, pursuant to Health and Safety Code Sections 39700 through 39705;

WHEREAS, an unsolicited research Proposal Number 911-76(a) entitled "Continued Development of a Mathematical Modeling Capability for Photochemical Air Pollution-Reactive Plumes" has been submitted by the California Institute of Technology to the Air Resources Board;

WHEREAS, the Research staff has reviewed and recommended this proposal for approval; and

WHEREAS, the Research Screening Committee has reviewed and recommends for funding:

> Proposal Number 911-76(a) entitled "Continued Development of a Mathematical Modeling Capability for Photochemical Air Pollution-Reactive Plumes" submitted by the California Institute of Technology for an amount not to exceed $99,951;

NOW, THEREFORE, BE IT RESOLVED, that the Air Resources Board pursuant to the authority granted by Health and Safety Code Section 39703, hereby accepts the recommendation of the Research Screening Committee and approves the following:

> Proposal Number 911-76(a) entitled "Continued Development of a Mathematical Modeling Capability for Photochemical Air Pollution-Reactive Plumes", submitted by the California Institute of Technology, for an amount not to exceed $99,951,

BE IT FURTHER RESOLVED, that the Executive Officer shall initiate administrative procedures and execute all necessary documents and contracts for the research effort proposed in an amount not to exceed $99,951.

I certify that the above is a true and correct copy of Resolution 80-43 as passed by the Air Resources Board

Sally Rump

Sally Rump
Board Secretary

State of California
AIR RESOURCES BOARD

ITEM NO: 80-11-5a(3)
DATE: June 25, 1980

ITEM: Research Proposal No. 911-76(a) entitled "Continued Development of a Mathematical Modeling Capability for Photochemical Air Pollution-Reactive Plumes."

RECOMMENDATION: Adopt Resolution 80-43 approving Research Proposal No. 911-76(a) for funding in an amount not to exceed $99,951.

SUMMARY: The Caltech Grid Model (CGM) developed under an earlier ARB contract is now undergoing final verification studies. This model represents the state-of-the-art knowledge in the area of airshed modeling. To make it a more versatile tool, the model should be integrated with a state-of-the-art point source reactive plume model. This will give the Board the capability to accurately model large point sources emitting NO_x and/or reactive hydrocarbons and evaluate the interaction of emissions from these sources with urban smog. The purpose of this proposal is the development of a three-dimensional model for a single point-source reactive plume and to incorporate the model into the CGM. The proposal seeks support for work which will expand upon earlier modeling efforts. The anticipated development involves three major tasks:

Task 1: Plume Dynamics - the development of models for plume rise and dispersion in an arbitrarily stratified atmosphere. An earlier computer code developed by the hydraulics group at Caltech will be modified to quantify the trajectory and dispersion of a buoyant plume in the atmosphere.

Task 2: Plume Chemistry - the development of means to calculate the rates of atmospheric reactions involving hydrocarbons, oxides of nitrogen, and sulfur dioxide occurring in a turbulently dispersing plume. As a starting point, the investigators propose to use the work of Shu, Lamb, and Seinfeld. This work deals with some of the problems of plume chemistry with the existing reactive plume models.

State of California
AIR RESOURCES BOARD

Resolution 80-44

September 25, 1980

WHEREAS, Sections 39600 and 39601 of the Health and Safety Code authorize the Air Resources Board to adopt standards, rules, and regulations necessary for the proper execution of the powers and duties granted to and imposed upon the Board by law;

WHEREAS, Section 43106 of the Health and Safety Code requires that each new production motor vehicle or engine required to meet the California emission standards established pursuant to Section 43101 of the Health and Safety Code be, in all material respects, substantially the same in construction as the test motor vehicle or engine certified by the Board;

WHEREAS, manufacturers of motor vehicles and engines intended for sale in California have, according to applicable certification procedures, demonstrated durability to meet the applicable emission standards for the useful life of the motor vehicle or engine;

WHEREAS, Section 43204 of the Health and Safety Code requires the manufacturer of each motor vehicle and motor vehicle engine to warrant to the ultimate purchaser and each subsequent purchaser that the motor vehicle or engine is:

(1) Designed, built, and equipped so as to conform at the time of sale with the applicable emission standards, and

(2) Free from defects in materials and workmanship which cause such motor vehicle or motor vehicle engine to fail to conform with the applicable regulations for its useful life;

WHEREAS, the claim has been made by the Bureau of Competition of the Federal Trade Commission and others that the Board's warranty regulations will have an anti-competitive effect on independent aftermarket parts manufacturers and repair facilities;

WHEREAS, the California Legislature in Senate Concurrent Resolution 9 requested that the Board examine, among other things, any anti-competitive effects of its warranty regulations;

WHEREAS, the Board is concerned that the warranty regulations may have such an anti-competitive effect, and recognizes the concerns of the Legislature and the aftermarket service industry in this regard;

WHEREAS, the Board, in responding to the concerns of the aftermarket and repair industries, created a Warranty Advisory Group for the purpose of monitoring data related to the economic effects of the regulations, and directed the group to report back to the Board;

WHEREAS, the Warranty Advisory Group has submitted its final report to the Board and has found that no apparent economic shift to dealers and away from the independent aftermarket is presently occurring as a result of these regulations;

WHEREAS, the Board finds that no evidence has been presented which demonstrates that the warranty regulations have had or will have any significant anti-competitive effects;

WHEREAS, the Board reaffirms its previous findings that its warranty regulations in the main are effective and necessary to ensure that vehicles sold in California are emissions durable and hence benefit air quality;

WHEREAS, the Board, after receipt of further information, reaffirms its previous findings that carburetion and ignition systems are significant parts of vehicle emissions control systems;

WHEREAS, the Board finds that it is appropriate for the regulations to clarify the penalty which results from violation of the warranty regulations;

WHEREAS, the Board finds that vehicle manufacturers should be encouraged to allow their designated warranty stations to use replacement parts in warranty repairs in addition to the replacement parts they themselves manufacture;

WHEREAS, the California Environmental Quality Act and Board regulations require that no proposed action be adopted as proposed if the proposed action would cause significant environmental harm and mitigation measures are feasible;

WHEREAS, the Board finds that no significant environmental harm will result from adopting the amendments to the regulations;

WHEREAS, a public hearing and other proceedings have been held in accordance with applicable provisions of the Government Code.

NOW, THEREFORE BE IT RESOLVED, that the Board hereby amends its regulations in Chapter 3, Title 13, California Administrative Code, as set forth in Attachment A hereto;

BE IT FURTHER RESOLVED, that the staff is directed to monitor and if necessary to develop evidence relating to concerns that the warranty regulations will have an anti-competitive effect, and upon the receipt or development of evidence that the warranty regulations will have an anti-competitive effect, to propose to the Board amendments designed to mitigate such effects;

BE IT FURTHER RESOLVED, that the Board hereby determines that the regulations adopted above are individually, and in the aggregate, at least as protective of public health and welfare as applicable federal regulations.

I certify that the above is a true and correct copy of Resolution 80-44, as adopted by the Air Resources Board.

Sally Rump

BOARD SECRETARY

EMISSIONS WARRANTY REGULATIONS

2035. Purpose, Applicability, and Definitions. (a) The purpose of this article is to interpret and make specific the statutory emissions warranty set forth in Health and Safety Code Section 43204 by clarifying the rights and responsibilities of individual motor vehicle and motor vehicle engine owners, motor vehicle and motor vehicle engine manufacturers, and the service industry.

(b) This article shall apply to:

(1) California certified 1973 and subsequent model year motorcycles, light-duty, medium-duty, and heavy-duty vehicles, registered in California and;

(2) California certified motor vehicle engines used in such vehicles.

(c) For the purposes of this article, the following definitions shall apply:

(1) "Useful life" means:

(A) In the case of Class I motorcycles and motorcycle engines (50 to 169 cc or 3.1 to 10.4 cu. in.), a period of use of five years or 12,000 kilometers (7,456 miles), whichever first occurs.

(B) In the case of Class II motorcycles and motorcycle engines (170 to 279 cc or 10.4 to 17.1 cu. in.), a period of use of five years or 18,000 kilometers (11,185 miles), whichever first occurs.

(C) In the case of Class III motorcycles and motorcycle engines (280 cc and larger or 17.1 cu. in. and larger), a period of use of five years or 30,000 kilometers (18,641 miles), whichever first occurs.

(D) In the case of diesel-powered heavy-duty vehicles (except medium-duty vehicles), and motor vehicle engines used in such vehicles, a period of use of five years, 100,000 miles, or 3000 hours of operation, whichever first occurs.

(E) In the case of light-duty and medium-duty vehicles certified under the Optional 100,000 Mile Certification Procedure, and motor vehicle engines used in such vehicles, a period of use of ten years or 100,000 miles, whichever first occurs.

(F) In the case of all other light-duty, medium-duty and heavy-duty vehicles, and motor vehicle engines used in such vehicles, a period of use of five years or 50,000 miles, whichever first occurs, or such other period as may be specified by statute or regulation.

(2) "Warranted part" means any emissions-related part installed on a motor vehicle or motor vehicle engine by the vehicle or engine manufacturer which is included on the "Emissions Warranty Parts List" required by Section 2036(b) and approved for the vehicle or engine by the Executive Officer.

(3) "Vehicle or engine manufacturer" means the manufacturer granted certification for a motor vehicle or motor vehicle engine. In the case of motor vehicles for which certification of the exhaust and evaporative emission control systems is granted to different manufacturers, the warranty responsibility shall be assigned accordingly.

2036. Warranty and Vehicle Owner Information. The manufacturer of each motor vehicle or motor vehicle engine shall:

(a) Warrant to the ultimate purchaser and each subsequent purchaser that the vehicle or engine is:

(1) Designed, built, and equipped so as to conform, at the time of sale, with all applicable regulations adopted by the Air Resources Board pursuant to its authority in Chapters 1 and 2, Part 5, Division 26 of the Health and Safety Code; and

(2) Free from defects in materials and workmanship which cause the failure of a "warranted part" to be identical in all material respects to that part as described in the vehicle or engine manufacturer's application for certification.

(b) ~~Commencing with~~ For 1980 and later models sold on or after September 1, 1979, furnish with each new vehicle or engine written instructions for the maintenance and use of the vehicle or engine by the owner, which instructions shall be consistent with this article and applicable regulations in Article 2 of this subchapter.

(c) ~~Commencing with~~ For 1980 and later models sold on or after September 1, 1979, furnish with each new vehicle or engine a list of the "warranted parts" installed on that vehicle or engine. The list shall include those parts included on the Air Resources Board "Emissions Warranty Parts List," dated December 14, 1978, and incorporated herein by reference.

(d) ~~Commencing with~~ For 1980 and later models sold on or after September 1, 1979, furnish with each new vehicle or engine a warranty statement which generally describes the obligations and

rights of vehicle or engine manufacturers and owners under this article. For 1982 and later model vehicles, in addition to other information required under these regulations, the manufacturer must included in that description the statement that the vehicle owner may obtain routine maintenance, repairs, and other nonwarranty work at any repair facility, or may perform the work himself or herself. This statement shall make clear that such nonwarranty work need not be performed at a designated warranty station in order for the warranty to remain in force.

(e) Except for 1980 and 1981 model motorcycles, submit the documents required by subsections (b), (c), and (d) with the manufacturer's preliminary application for new vehicle or engine certification for approval by the Executive Officer. The Executive Officer may reject or require modification of the manufacturer's list of "warranted parts" to ensure that each such list is of proper scope and also may reject or require modification of any of the documents required by subsection (b) or (d). Approval by the Executive Officer of the documents required by subsections (b), (c), and (d) shall be a condition of certification. The Executive Officer shall approve or disapprove the documents required by subsections (b), (c), and (d) within 90 days of the date such documents are received from the manufacturer. Any disapproval shall be accompanied by a statement of the reasons therefor. In the event of disapproval, the manufacturer may petition the Board to review the decision of the Executive Officer.

(f) Notwithstanding subsection (c), the Executive Officer may delete any part from a manufacturer's list of "warranted parts" provided

the manufacturer demonstrates to the Executive Officer's satisfaction that:

(1) Failure of such part will not increase the emissions of any vehicle or engine on which it is installed; and

(2) Any deterioration of driveability or performance which results from failure of the part could not be corrected by adjustments or modifications to other vehicle components.

(g) Notwithstanding subsection (c), the Executive Officer, following public hearing, may add any part to the "Emissions Warranty Parts List" if:

(1) Such part was not in general use on 1979 model motor vehicles manufactured for sale in California; and

(2) Such part is an emissions-related part as defined in Section 1900(b)(4), Title 13, California Administrative Code.

2037. Motor Vehicle and Motor Vehicle Engine Manufacturer's Obligations. Subject to the conditions and exclusions of Section 2041, the warranty on emissions-related parts shall be interpreted as follows:

(a) Any "warranted part" which is not scheduled for replacement in the written instructions for required maintenance that are required by Subsection 2036(b) shall be warranted for the useful life of the vehicle or engine. If any such part fails during the useful life period, it shall be repaired or replaced by the vehicle or engine manufacturer according to Subsection (d).

(b) Any "warranted part" which is scheduled only for regular inspection in the written instructions for required maintenance that are required by Subsection 2036(b) shall be warranted for the useful life of

the vehicle or engine. A statement in such written instructions to the effect of "repair or replace as necessary" shall not reduce the period of warranty coverage.

(c) Any "warranted part" which is scheduled for replacement in the written instructions for required maintenance that are required by Subsection 2036(b) shall be warranted for the scheduled time or mileage, whichever first occurs, of the first scheduled replacement point for that part. If such a part fails during the first scheduled period, the part shall be repaired or replaced by the vehicle or engine manufacturer according to Subsection (d) below.

(d) Repair or replacement of any "warranted part" under the warranty provisions of this article shall be performed at no charge to the vehicle or engine owner, at a service establishment authorized by the vehicle or engine manufacturer to perform warranty repairs (hereinafter referred to as a "warranty station"), except in the case of an emergency when a "warranted part" or a "warranty station" is not reasonably available to the vehicle or engine owner. In an emergency, repairs may be performed at any available service establishment, or by the owner, using any replacement part. The manufacturer shall reimburse the owner for his or her expenses, not to exceed the manufacturer's suggested retail price for all warranted parts replaced and labor charges based on the manufacturer's recommended time allowance for the warranty repair and the geographically appropriate hourly labor rate. Heavy-duty vehicle and engine manufacturers shall establish reasonable emergency repair procedures which may differ from those specified in this subsection. A vehicle or

engine owner may reasonably be required to keep receipts and failed parts in order to receive compensation for warranted repairs reimbursable due to an emergency, provided the manufacturer's written instructions advise the owner of this obligation.

(e) Notwithstanding the provisions of Subsection (d), warranty services or repairs shall be provided at all of a manufacturer's dealerships which are franchised to service the subject vehicle or engines.

(f) To the extent required by any Federal or California law, whether statutory or common law, a vehicle manufacturer shall provide a means for service facilities other than the manufacturer's dealerships to perform warranty repairs.

~~(f)~~ (g) The vehicle or engine owner shall not be charged for diagnostic labor which leads to the determination that a "warranted part" is in fact defective, provided that such diagnostic work is performed at a "warranty station".

~~(g)~~ (h) The vehicle or engine manufacturer shall be liable for damages to other vehicle components proximately caused by a failure under warranty of any "warranted part".

~~(h)~~ (i) Throughout the vehicle or engine's useful life time period, the vehicle or engine manufacturer shall maintain a supply of "warranted parts" sufficient to meet the expected demand for such parts. The lack of availability of such parts within a reasonable time period, not to exceed 30 days, shall constitute an emergency for purposes of Subsection (d).

~~(i)~~ (j) Any replacement part may be used in the performance of any maintenance or repairs. Any replacement part designated by a manufacturer may be used in warranty repairs provided without charge to the vehicle owner. Such use shall not reduce the warranty obligations of the vehicle or engine manufacturer, except that the vehicle or engine manufacturer shall not be liable under this article for repair or replacement of any replacement part which is not a "warranted part" (except as provided under Subsection ~~(g)~~ (h)). Manufacturers are encouraged whenever possible to designate replacement parts in addition to those they themselves manufacture.

~~(j)~~ (k) Any add-on or modified part exempted by the Air Resources Board from the prohibitions of Vehicle Code Section 27156 may be used on a vehicle or engine. Such use, in and of itself, shall not be grounds for disallowing a warranty claim made in accordance with this article. The vehicle or engine manufacturer shall not be liable under this article to warrant failures of "warranted parts" caused by the use of such an add-on or modified part.

~~(k)~~ (l) The Executive Officer may request and, in such case, the vehicle or engine manufacturer shall provide any documents which describe that manufacturer's warranty procedures or policies. For 1981 and later model vehicles, these policies shall comply with Sections 2035-2042, inclusive, of Title 13, California Administrative Code.

2038. Vehicle Owner Obligations. (a) The owner of any vehicle or engine warranted pursuant to this article shall be responsible for the performance of all scheduled maintenance specified in the written

instructions furnished to the owner pursuant to Subsection 2036(b). Such maintenance may be performed by the owner, at a service establishment of the owner's choosing, or by a person or persons of the owner's choosing.

(b) Except as specified in Subsection 2040(a), failure of the vehicle or engine owner to ensure the performance of such scheduled maintenance or to keep maintenance records shall not, per se, be grounds for disallowing a warranty claim.

~~2039.--Vehicle-Inspection-Program.--This-section-shall-apply-to passenger-cars,-light-duty-trucks-and-medium-duty-vehicles-required-to be-inspected-pursuant-to-the-Motor-Vehicle-Inspection-Program-(MVIP) established-pursuant-to-Sections-9889.50-et.-seq.,-of-the-California Business-and-Professions-Code.~~

~~(a)--The-owner-of-such-a-vehicle-which-fails-in-the-inspection during-its-useful-life-may-choose-to-have-the-vehicle-repaired-at-a warranty-station.~~

~~(1)--If-the-warranty-station-identifies-that-the-MVIP-failure-was caused-by-the-failure-or-malfunction-of-a-"warranted-part",-then-the vehicle-manufacturer-shall-be-liable-for-all-expenses-involved-in detecting-and-correcting-the-part-failure-or-malfunction.--Unless-the warranty-station-demonstrates-that-the-part-failure-or-malfunction-was caused-by-abuse,-neglect,-or-improper-maintenance-as-specified-in Subsection-2041(a),-or-was-caused-by-an-improper-adjustment-as-specified in-Subsection-2031(b).~~

~~(2)--If-the-warranty-station-demonstrates-that-the-MVIP-failure was-caused-by-one-or-more-of-the-conditions-excluded-from-warranty~~

~~coverage pursuant to Section 2041, the vehicle owner shall be liable for all diagnostic and repair expenses. Such expenses shall not exceed the maximum repair costs permissible under the MVIP.~~

~~(3) If the warranty station identifies that the MVIP failure was caused by one or more defects covered under warranty pursuant to these regulations in combination with one or more conditions excluded from warranty coverage pursuant to Section 2041, then the vehicle owner shall not be charged for that portion of the diagnostic and repair costs related to detecting and repairing the warrantable defects.~~

~~(b) In the alternative, the owner of a vehicle which fails an MVIP inspection may choose to have the vehicle repaired somewhere other than at a warranty station. If a warrantable defect is found, the vehicle owner may deliver the vehicle to a warranty station and have the defect corrected free of charge. The vehicle manufacturer shall not be liable for any diagnostic expenses incurred at a service establishment not authorized to perform warranty repairs, except in the case of an emergency as specified in Subsection 2037(d).~~

~~2040.~~ 2039. Mediation; Finding of Defect. (a) This section is intended to provide a mechanism for mediating unresolved emissions warranty disputes between vehicle or engine owners and dealers or vehicle or engine manufacturers.

(b) A vehicle or engine owner may request that the Executive Officer mediate a warranty claim.

(1) Upon receipt of such a claim the Executive Officer, or the Executive Officer's representative, may make a determination regarding whether the claim is meritorious on its face and, if meritorious, shall

notify the appropriate dealer, or vehicle or engine manufacturer of the claim. The party against whom a complaint is made shall be given a reasonable time in which to respond. The Executive Officer may conduct an informal conference, and may request additional information and evidence.

(2) Upon examination of the facts submitted by the parties concerned, the Executive Officer, or the Executive Officer's representative, may find that a "warranted part" is defective and is eligible for warranty service or replacement pursuant to this article. If such a finding is made, a Finding of Defect shall be issued for the part.

(3) The Finding of Defect shall include the name of the vehicle owner, vehicle manufacturer and model (including model year, make, car line and body type), vehicle identification number, engine family, odometer reading, date of inspection, identification of the defective part and the signature of the person issuing the Finding.

~~2041.~~ 2040. Exclusions. (a) The repair or replacement of any "warranted part" otherwise eligible for warranty coverage under Section 2037 ~~or 2039~~, shall be excluded from such warranty coverage if the vehicle or engine manufacturer demonstrates that the vehicle or engine has been abused, neglected, or improperly maintained, and that such abuse, neglect, or improper maintenance was the direct cause of the need for the repair or replacement of the part.

(b) The repair of a "warranted part" otherwise eligible for warranty coverage under Section 2037 ~~or 2039~~ shall be excluded from such warranty coverage if:

(1) Such repair consists solely of adjustments to the idle air/fuel mixture ratio, curb or high idle speed, ignition timing, valve lash, injection timing for diesel-powered vehicles, or any combination thereof; and

(2) Such repair is not listed in Subsection (c) below as a warranted adjustment.

(c) Except as provided in Subsection (a) above, the following adjustments are eligible for warranty coverage under Section 2037; ~~or 2039;~~

(1) For 1980 and subsequent model year passenger cars, and 1981 and subsequent model year light-duty trucks and medium-duty vehicles: idle air/fuel mixture adjustment of any carburetor.

(2) For all motor vehicles: any adjustment of a component which has a factory installed, and properly operating, adjustment limiting device (such as an idle limiter cap).

2041. Penalties. Any person who violates a provision of these regulations shall be subject to fines specified under Health and Safety Code Section 43016.

2042. Severability. Each part of this article shall be deemed severable, and in the event that any part of this article is held to be invalid, the remainder of this article shall continue in full force and effort.

State of California

Memorandum

To : Huey D. Johnson
Secretary
Resources Agency

Date : November 3, 1980

Subject: Filing of Notice of Decision of the Air Resources Board

From : **Air Resources Board**

Pursuant to Title 17, Section 60007(b), and in compliance with Air Resources Board certification under section 21080.5 of the Public Resources Code, the Air Resources Board hereby forwards for posting the attached notice of decision and response to environmental comments raised during the comment period.

Sally Rump

Sally Rump
BOARD SECRETARY

Attach: [redacted]
Resolution 80-55

RECEIVED BY
Office of the Secretary

NOV 3 1980

Resources Agency of California

State of California
AIR RESOURCES BOARD

Response to Significant Environmental Issues

Item: PUBLIC HEARING TO CONSIDER PROPOSED AMENDMENTS TO TITLE 13, CALIFORNIA ADMINISTRATIVE CODE, SECTIONS 2035-2042, REGARDING WARRANTY OF EMISSIONS-RELATED COMPONENTS OF VEHICLES

Public Hearing Date: September 24, 1980

Response Date: September 25, 1980

Issuing Authority: Air Resources Board

Comment: None raised.

Response: None

CERTIFIED: Sally Rump
Sally Rump
Board Secretary

10/29/80
(Date)

RECEIVED BY
Office of the Secretary

NOV 3 1980

Resources Agency of California

State of California
AIR RESOURCES BOARD

Opposing Considerations and Agency Response

Public Hearing Dates: September 24, 1980 and September 25, 1980

PUBLIC HEARING TO CONSIDER PROPOSED AMENDMENTS TO TITLE 13, CALIFORNIA ADMINISTRATIVE CODE, SECTIONS 2035-2042, REGARDING WARRANTY OF EMISSIONS-RELATED COMPONENTS OF VEHICLES

Opposing Consideration: Several manufacturers of aftermarket automotive parts and several representatives of the independent automotive service industry urged the Board to narrow the scope of its current warranty regulations by reducing the number of parts that must be warranted and/or reducing the length of time for which they must be warranted.

Agency Response: The current regulations and list of warranted parts was adopted at previous Board hearings based on findings by the Board that all parts required to be warranted have an effect on emissions and therefore are within the scope of Health and Safety Code Section 43204 and must be warranted for the vehicle's useful life. No evidence was presented that either challenged the Board's past findings of the necessity of the current regulations for air quality benefits, or demonstrated the anti-competitive effects of the current regulations. On receipt or development of significant evidence on either of these issues, the Board, within the scope of its authority under Section 43204, will reconsider relevant portions of the regulations.

Opposing Consideration: The Federal Bureau of Competition testified that anti-competitive effects of the regulations could be minimized and air quality benefits retained or increased if the Board dropped enforcement of the statutory defects warranty and instead enforced a performance

warranty analogous to the federal performance warranty. Some other witnesses also urged enactment of a performance warranty.

Agency Response: Current state law requires a defects warranty, and the Board cannot ignore this statutory requirement. Furthermore, California has not enacted an annual vehicle inspection and maintenance program, which is necessary to carry out a performance warranty. The Board could not adopt the Bureau's suggestions because of this lack of authority. If an annual inspection and maintenance program is enacted, Board staff is directed to give further consideration to the Bureau's suggestion.

Opposing Consideration: Representatives of the independent service industry testified that the staff's proposals to: 1) require vehicle manufacturers to establish criteria for designation of independent service facilities as stations designated to perform warranty work reimbursable by vehicle manufacturers; and 2) require vehicle manufacturers to pay for diagnostic work done at independent facilities, were impractical and unworkable. They cited problems of adequate timely reimbursement and difficulty of becoming designated as warranty stations, among others. They opposed the staff proposals.

Agency Response: The Board declined to adopt the proposals objected to by these witnesses.

Opposing Consideration: Several vehicle manufacturers and representatives testified that the proposals that would require them to designate independent service facilities as warranty stations and to pay for diagnostic work done at nondealers were beyond the legal authority of the Board to

enact. They also testified that the proposals would greatly increase the cost of providing warranty coverage and would subject vehicle manufacturers to financial and legal liability for work whose cost and quality they could not control. The manufacturers expressed their belief that the testimony and data available to the Board also did not support these amendments because they did not demonstrate clear and significant anti-competitive effects from the current regulations that would justify the amendments.

Agency Response: The Board declined to adopt these proposals but directed staff to continue to monitor the effects on competition of the warranty regulations.

Opposing Consideration: Vehicle manufacturers and representatives testified that they considered unworkable the proposal that would require them to allow use of replacement parts in warranty work other than the parts they themselves manufacture. The manufacturers testified that this proposal would require the vehicle manufacturer to warrant the performance of parts whose quality they could not control. They also feared that costs of the warranty program would increase if manufacturers could not control selection of the parts used in warranty repairs. Finally, they argued that the proposal is beyond the Board's legal authority to adopt and conflicts with state and federal product warranty statutes.

Agency Response: The Board declined to adopt the proposal. Instead, the Board adopted an amendment urging but not requiring manufacturers to allow use in warranty work of replacement parts other than those the manufacturers themselves produce.

Opposing Consideration: Heavy duty engine manufacturers testified that, for the vehicles they manufacture, the proposals requiring manufacturers to designate independent facilities as warranty stations and requiring manufacturers to pay for diagnostic work done by independents are unworkable. They argued that even if such proposals are appropriate for passenger cars or other light and medium-duty vehicles, that the complexity of heavy-duty engines makes it extremely difficult for independents to perform diagnostic or warranty repair work on them. They urged the Board to exempt heavy-duty engines from these proposals.

Agency Response: The Board declined to adopt the proposals for any vehicle or engine category.

State of California
AIR RESOURCES BOARD

Resolution No. 80-45

June 25, 1980

WHEREAS, Health and Safety Code Section 39601 authorizes the Air Resources Board (the "Board") to adopt standards, rules and regulations necessary for the proper execution of the powers and duties granted to and imposed upon the Board by law; and

WHEREAS, the Board maintains regulations governing its meetings and hearing procedures in Title 17, California Administrative Code, Sections 60000-60013; and

WHEREAS, the Board must follow the rulemaking requirements of the California Administrative Procedure Act, Government Code Sections 11370-11445, in adopting, amending or repealing its administrative regulations; and

WHEREAS, new legislation, AB 1111 (Chapter 810, Stats. 1979) and AB 939 (Chapter 1203, Stats. 1979) has repealed these provisions and enacted new rulemaking procedures contained in Government Code Sections 11340-11445; and

WHEREAS, this legislation has stimulated the need for the Board to adopt new regulations and amend existing regulations in order to meet and implement the new statutory requirements and clarify its procedures and policies; and

WHEREAS, such legislation becomes effective on July 1, 1980; and

WHEREAS, the California Environmental Quality Act and Air Resources Board regulations require that an activity not be adopted as proposed where significant environmental impacts have been identified and alternative and/or mitigation measures which would substantially reduce these impacts exist; and

WHEREAS, a public hearing has been held in accordance with the provisions of the Administrative Procedure Act (Government Code, Title 2, Division 3, Part 1, Chapter 4.5); and

WHEREAS, the Board finds:

That the regulations and amendments adopted by this resolution are necessary for the proper execution of the powers and duties granted to, and imposed upon, the Board;

That it is necessary that the regulations become effective at the same time as the underlying statutes to prevent uncertainty and confusion regarding the matters covered by the regulations;

That neither staff nor the public have identified any significant adverse environmental impacts resulting from implementation of this proposal.

NOW, THEREFORE, BE IT RESOLVED, that the Board adopts the amendments and additions to Title 17, California Administrative Code, Sections 60001, 60004, 60005, 60008.2, 60008.3, and 60013 as set forth in Attachment A hereto.

BE IT FURTHER RESOLVED, that the Board directs the Executive Officer to file with the Secretary of State the regulations adopted herein to become effective July 1, 1980.

I certify that the above is a true and correct copy of Resolution 80-45 as passed by the Air Resources Board

Sally Rump

Sally Rump
Board Secretary

Attachment A

SUBCHAPTER 1. ADMINISTRATIVE PROCEDURES

Article 1. Board Meetings and Executive Officer Hearings

* * *

60001. Notice.

(a) Notice of regular meetings of the state board shall be sent by first class mail, dispatched not later than seven days preceding such meeting, and shall contain an agenda or description of all items to be considered at that meeting.

(b) Notice of regular meetings of the state board shall be mailed to all state board members, to all parties to proceedings on the agenda, to interested federal, state and local agencies, and to persons who request such notice in writing. For public information purposes, the agenda shall be provided to newspapers of general circulation.

(c) When a public hearing is required, pursuant to the requirements of Chapter 3.5 (commencing with Section 11340), Part 1, Division 3, Title 2 of the Government Code, for the adoption, amendment, or repeal of any rule, regulation, order or standard of general application in order to implement, interpret, or make specific the law enforced or administered by the state board or the Executive Officer, notice shall be given in accordance with the requirements of said Chapter 3.5. Notice shall also be given to all state and local governmental agencies having jurisdiction by law with respect to a proposed activity of the state board.

(d) Before taking any action pursuant to Health and Safety Code Sections 41503 to 41505, inclusive, or Health and Safety Code Section 41650, notice shall be given as provided in Health and Safety Code

Section 41502, and to all state board members, members of the public requesting such notice in writing, and all state and local governmental agencies having jurisdiction by law with respect to the proposed action.

Note: Authority cited: Section 39601, Health and Safety Code.

Reference: Section 11125 and 11346.4, Government Code, and Section 41502, Health and Safety Code.

* * *

60004. Testimony and Record of Proceedings.

(a) It is the board's policy to encourage and allow interested persons to present oral as well as written testimony at public hearings and meetings held by the board or the Executive Officer. Oral testimony shall be permitted if, no later than 15 days prior to the hearing, an interested person or duly authorized representative submits in writing to the board secretary a request to present oral testimony. Except for hearings held pursuant to Section 41650 of the Health and Safety Code, where no such request is received, the state board or the Executive Officer, as the case may be, shall have discretion to limit interested persons to the presentation of written testimony only. The chairperson, or the Executive Officer, may impose reasonable limitations on the scope, duration, and manner of presentation of oral testimony. To the extent practicable, such limitations shall be set forth in the hearing notice.

(b) The state board may specify the date by which comments submitted in writing must be received for them to be considered, provided that, except for emergency hearings, the deadline for filing

written comments shall be at least 45 days from the date of publication of the staff report. Any deadline for receipt of written comments shall be contained in the hearing notice. The state board shall accept for consideration written comments submitted after the deadline specified in the hearing notice but by the hearing date on a detailed factual showing that the comments could not have been provided to the state board by the deadline by reason of factors beyond the control of the person submitting the comments, and that the comments were submitted as expeditiously as reasonably practicable following the deadline.

(c) At any public hearing held pursuant to Health and Safety Code Section 41650, regarding state board review of nonattainment area plans, representatives from districts included within the nonattainment area and the designated air quality planning agency shall have the right to question and solicit testimony from qualified representatives of the state board staff on the matter being considered. The state board may, by affirmative vote of four members, place reasonable limits on such right. With regard to any Executive Officer hearing held under Section 41650, the state board may impose such limits as part of its delegation to the Executive Officer.

(d) The proceedings shall be recorded electronically, or by other appropriate means. At the request of the state board, the Executive Officer, or any interested person, the hearing shall be

recorded by a certified court reporter and the cost thereof borne by the person making the request.

Note: Authority cited: Sections 39600, 39601, Health and Safety Code.

Reference: Sections 11346.5, 11346.8, Government Code and Sections 40451, 41502, 41650, 41651, Health and Safety Code.

* * *

60005. Staff Reports.

(a) Where a public hearing by the state board is required by law, or when the Executive Officer proposes to take action following a public hearing or public comment period, a staff report, together with the proposed rule, regulation order, or standard, shall be prepared and published by the staff of the state board. Where a public hearing is required pursuant to the requirements of Chapter 3.5 (commencing with Section 11340), Part 1, Division 3, Title 2 of the Governement Code, the staff report shall be published at least 45 days before the date of the public hearing. For all other public hearings, the staff reports shall be published at least 30 days before the date of the public hearing. Notwithstanding the foregoing provisions, if the state Board proposes to take emergency action after public hearing, including but not limited to action pursuant to Government Code Section 11346.1(b) and the emergency provisions of Health and Safety Code Section 41502, the staff report shall be published as early as reasonably practicable prior to the public hearing. Staff reports shall be distributed to all governmental agencies having jurisdiction by law with respect to the proposed activity and to persons who have requested such reports.

(b) Except for documents determined to be a trade secret pursuant to Sections 91000, et. seq., of Title 17, California Administrative Code, or documents otherwise exempt from disclosure pursuant to the Public Records Act (Government Code Sections 6250 et. seq.), copies of documents reviewed in connection with the consideration of issues discussed in staff reports, and written comments received from interested persons, shall be made available for inspection and copying upon request.

(c) It is the policy of the state board to provide a reasonable opportunity for interested persons to review and comment upon staff reports prepared on items for which a public hearing is required. The notice required by Section 60001 shall therefore describe the manner in which a staff report may be obtained for review and comment, and general subject matter addressed in the staff report and the specific staff person to whom the request for a copy and any comment shall be addressed.

(d) It is the policy of the state board to prepare staff reports in a manner consistent with the environmental protection purposes of the state board's regulatory program and with the goals and policies of the California Environmental Quality Act (CEQA: Public Resources Code Sections 21000 et. seq.). Therefore, all staff reports shall contain a description of the proposed action and in a separate section, an assessment of anticipated significant long or short term adverse environmental impacts associated with the proposed action and a succinct analysis of those impacts. The adverse impacts to be considered are direct and indirect effects on land, air , water, and minerals (including energy supply or use, flora, fauna, noise, and objects of historic or aesthetic significance).

The analysis shall address possible mitigation measures and alternatives to the proposed action and any irreversible environmental changes or growth-inducing impacts.

(e) The Executive Officer shall prescribe guidelines for reimbursement of the state board's cost of compliance with subsection (a), for the format of staff reports, and such other related requirements as the Executive Officer deems appropriate.

Note: Authority cited: Section 39601, Health and Safety Code.

Reference: Section 41502, Health and Safety Code, Sections 11125.1, 11346.1, Government Code.

* * *

60008.2. Statement of Reasons for Proposed Rulemaking

(a) Where a public hearing is required pursuant to Chapter 3.5 (commencing with Section 11340), Part 1, Division 3, Title 2 of the Government Code, the statement required by Government Code Section 11346.7 shall be prepared by the staff of the state board prior to the time the notice referred to in Section 60001(c) is published and made available to the public. The notice shall inform the reader that such statement has been prepared.

(b) Prior to final adoption of a regulation, the statement shall be updated pursuant to Government Code Section 11346.7.

Note: Authority cited: Section 39601, Health and Safety Code.

Reference: Sections 11346.6, 11346.7, Government Code.

* * *

60008.3. Rulemaking File.

For every rulemaking for which a public hearing is required pursuant to Chapter 3.5 (commencing with Section 11340), Part 1, Division 3, Title 2 of the Government Code, the secretary of the state board shall maintain a file as required by Government Code Section 11347.3.

Note: Authority cited: Section 39601, Health and Safety Code.

Reference: Section 11347.3, Government Code.

* * *

60013. Confirmation of Emergency Action.

Where the state board takes action under emergency conditions, and such action is subject to Chapter 3.5 (commencing with Section 11340), Part 1, Division 3, Title 2 of the Government Code, the state board or the Executive Officer shall confirm such action within 120 days in accordance with the provisions of Government Code Section 11346.1 if it is determined that the action should have legal effect for more than 120 days.

Note: Authority cited: Section 39601, Health and Safety Code.

Reference: Section 11346.1, Government Code.

That neither staff nor the public have identified any significant adverse environmental impacts resulting from implementation of this proposal.

NOW, THEREFORE, BE IT RESOLVED, that the Board adopts the amendments and additions to Title 17, California Administrative Code, Sections 60001, 60004, 60005, 60008.2, 60008.3, and 60013 as set forth in Attachment A hereto.

BE IT FURTHER RESOLVED, that the Board directs the Executive Officer to file with the Secretary of State the regulations adopted herein to become effective July 1, 1980.

I certify that the above is a true and correct copy of Resolution 80-45 as passed by the Air Resources Board

Sally Rump

Sally Rump
Board Secretary

State of California
AIR RESOURCES BOARD

Resolution No. 80-45

June 25, 1980

WHEREAS, Health and Safety Code Section 39601 authorizes the Air Resources Board (the "Board") to adopt standards, rules and regulations necessary for the proper execution of the powers and duties granted to and imposed upon the Board by law; and

WHEREAS, the Board maintains regulations governing its meetings and hearing procedures in Title 17, California Administrative Code, Sections 60000-60013; and

WHEREAS, the Board must follow the rulemaking requirements of the California Administrative Procedure Act, Government Code Sections 11370-11445, in adopting, amending or repealing its administrative regulations; and

WHEREAS, new legislation, AB 1111 (Chapter 810, Stats. 1979) and AB 939 (Chapter 1203, Stats. 1979) has repealed these provisions and enacted new rulemaking procedures contained in Government Code Sections 11340-11445; and

WHEREAS, this legislation has stimulated the need for the Board to adopt new regulations and amend existing regulations in order to meet and implement the new statutory requirements and clarify its procedures and policies; and

WHEREAS, such legislation becomes effective on July 1, 1980; and

WHEREAS, the California Environmental Quality Act and Air Resources Board regulations require that an activity not be adopted as proposed where significant environmental impacts have been identified and alternative and/or mitigation measures which would substantially reduce these impacts exist; and

WHEREAS, a public hearing has been held in accordance with the provisions of the Administrative Procedure Act (Government Code, Title 2, Division 3, Part 1, Chapter 4.5); and

WHEREAS, the Board finds:

That the regulations and amendments adopted by this resolution are necessary for the proper execution of the powers and duties granted to, and imposed upon, the Board;

That it is necessary that the regulations become effective at the same time as the underlying statutes to prevent uncertainty and confusion regarding the matters covered by the regulations;

RECEIVED BY
Office of the Secretary

JUL 01 1980

Resources Agency of California

State of California

Memorandum

To : Huey D. Johnson
Secretary
Resources Agency
1416 - 9th Street
Sacramento, CA 95814

Date : July 1, 1980

Subject : Filing of Notice of Decision of the Air Resources Board

From : Air Resources Board

Pursuant to Title 17, Section 60007(b), and in compliance with Air Resources Board certification under section 21080.5 of the Public Resources Code, the Air Resources Board hereby forwards for posting the attached notice of decision and response to environmental comments raised during the comment period.

Sally Rump

Sally Rump
Board Secretary

attachments
[redacted]
Resolution 80-26

State of California
AIR RESOURCES BOARD

Response to Significant Environmental Issues

Item: Amendments to Title 17, California Administrative Code, Sections 60000-60023, regarding the Administrative Procedures of the Air Resources Board (Board Item 80-11-4)

Public Hearing Date: June 25, 1980

Response Date: June 25, 1980

Issuing Authority: Air Resources Board

Comment: None Received

Response: N/A

CERTIFIED: Sally Rump
Board Secretary

Date: July 1, 1980

RECEIVED BY
Office of the Secretary

JUL 01 1980

Resources Agency of California

State of California
AIR RESOURCES BOARD

PUBLIC HEARING TO CONSIDER AMENDMENTS TO TITLE 17, CALIFORNIA ADMINISTRATIVE CODE SECTIONS 60000-60023 REGARDING THE ADMINISTRATIVE PROCEDURES OF THE AIR RESOURCES BOARD

Summary of Opposing Considerations and Agency Response

1. Opposing Consideration: A written comment from the Western Oil and Gas Association ("WOGA") opposes the language in proposed Section 60004 which provides that oral testimony may be limited to the issues raised in written comments or in the staff report. WOGA notes that new developments in the air pollution field occur rapidly. It suggests that the policy of the ARB be to permit those who wish to testify to present new matters at the time of the public hearing upon only a minimal showing as to why the information was not provided earlier in writing.

   Agency Response: The proposed limiting language has been eliminated.

2. Opposing Consideration: By written comment, WOGA also opposes the proposed language in Section 60004 authorizing the Board to establish in the hearing notice a deadline, except for emergency hearings at least 30 days from publication of the staff report, by which comments submitted in writing must be received for them to be considered. For the same reasons as given in item "1" above, WOGA suggests that written comments after the deadline be considered if the Board is provided with an explanation as to why the comments were not available by the deadline.

   WOGA also summarily states that, "there is no statutory authority for imposing an advance submission requirement." Similarly, Steven MacDonald

of the law firm of Latham and Watkins advised the Board of his opinion that Government Code Section 11346.8 precludes the establishment of a deadline for written comments prior to the hearing date.

Persons testifying also requested that the deadline for written comments be extended to 45 days after notice.

Agency Response: In unusual situations, members of the public may not be able to submit comments by the deadline for reasons beyond their control. In these situations, the public should not be precluded from submitting written statements. Therefore, the following language will be added to proposed Section 60004:

> The state board shall accept for consideration written comments submitted after the deadline specified in the hearing notice but by the hearing date on a detailed factual showing that the comments could not have been provided to the state board by the deadline by reason of factors beyond the control of the person submitting the comments, and that the comments were submitted as expeditiously as reasonably practicable following the deadline.

As discussed above, it is necessary for the Board normally to receive all written comments prior to the Board hearing so that the required statements may be prepared. The proposed exception to the deadline is purposefully limited and applies only when the issues raised in the comments truly could not have been raised by the deadline.

Further, the deadline is changed to 45 days to allow a 45-day comment period in all cases.

The legal branch has determined that, particularly with the proposed exception, the deadline authorized in Section 60004 is permitted under Government Code Section 11346.5(a)(7). Staff has been advised by Herbert Nobriga, Director of the Office of Administrative Hearings, that such a deadline is permissible under the new statutes. (See attached Appendix C.)

3. Opposing Consideration: Herbert Nobriga, Director of the Office of Administrative Hearings, has orally brought to staff's attention AB 1861 (Chapter 151, Stats. 1980), approved by the Governor on June 11, 1980. A copy is attached hereto as Appendix A. This bill provides that in hearings regarding adoption, amendment or repeal of an administrative regulation by a state agency, an oral presentation shall be permitted if a written request is submitted to the state agency no later than 15 days prior to the hearing. The law goes into effect January 1, 1981.

Agency Response: Section 60004 of the proposed regulations should be changed to comply with this new law. Attached hereto as Appendix B is a set of the proposed regulations, including the new proposed Section 60004. To clarify board procedures, the contents of prior subsection (a) have been divided into subsections (a) and (b).

Assembly Bill No. 1861

CHAPTER 151

An act to amend Section 11346.8 of the Government Code, relating to administrative regulations.

[Approved by Governor June 11, 1980. Filed with Secretary of State June 11, 1980.]

LEGISLATIVE COUNSEL'S DIGEST

AB 1861, Egeland. Administrative regulations.

Under existing law, at a hearing regarding the adoption, amendment, or repeal of a regulation by a state agency, the state agency is required to provide any interested person or his duly authorized representative, or both, the opportunity to present statements in writing with or without opportunity to present the same orally.

This bill would, instead, provide that when a public hearing is scheduled, an oral presentation shall also be permitted if a written request is submitted to the state agency no later than 15 days prior to the hearing.

The people of the State of California do enact as follows:

SECTION 1. Section 11346.8 of the Government Code is amended to read:

11346.8. On the date and at the time and place designated in the notice the state agency shall afford any interested person or his or her duly authorized representative, the opportunity to present statements, arguments, or contentions in writing. If a public hearing is scheduled, an oral presentation shall also be permitted if, no later than 15 days prior to the hearing, an interested person or duly authorized representative submits in writing to the state agency, a request to make an oral presentation. The state agency shall consider all relevant matter presented to it before adopting, amending or repealing any regulation.

In any hearing under this section the state agency or its duly authorized representative shall have authority to administer oaths or affirmations, and may continue or postpone such hearing from time to time to such time and at such place as it shall determine.

The state agency shall make no substantial change or modification to a proposed adoption, amendment, or repeal of a regulation unless such change or modification is related directly to the same subject or issue noticed pursuant to Section 11345.4.

O

SUBCHAPTER 1. ADMINISTRATIVE PROCEDURES

Article 1. Board Meetings and Executive Officer Hearings

* * *

60001. Notice. (a) Notice of regular meetings of the state board shall be sent by first class mail, dispatched not later than seven days preceding such meeting, and shall contain an agenda or description of all items to be considered at that meeting.

(b) Notice of regular meetings of the state board shall be mailed to all state board members, to all parties to proceedings on the agenda, to interested federal, state and local agencies, and to persons who request such notice in writing. For public information purposes, the agenda shall be provided to newspapers of general circulation.

(c) When a public hearing is required, pursuant to the requirements of Chapter 4.5 ~~(commencing with Section 11371)~~, 3.5 (commencing with Section 11340), Part 1, Division 3, Title 2 of the Government Code, for the adoption, amendment, or repeal of any rule, regulation, order or standard of general application in order to implement, interpret, or make specific the law enforced or administered by the state board or the Executive Officer, notice shall be given in accordance with the requirements of said Chapter 4.5 3.5. Notice shall also be given to all state and local governmental agencies having jurisdiction by law with respect to a proposed activity of the state board.

~~(d) Where a public hearing is required pursuant the Health and Safety Code Section 41502, regarding the establishment of a basinwide air pollution control plan or the assumption of the powers of an air pollution control district to develop an effective plan, program, rules or regulations for the attainment or maintenance of ambient air quality standards, notice shall be given as required by Section 41502, including~~

~~notice-to-all-state-board-members,-to-the-basinwide-air-pollution-control-council,-if-any,-to-the-affected-districts,-to-members-of-the public-requesting-such-notice-in-writing,-and-to-all-state-and-local governmental-agencies-having-jurisdiction-by-law-with-respect-to-the proposed-action.~~

(d) Before taking any action pursuant to Health and Safety Code Sections 41503 to 41505, inclusive, or Health and Safety Code Section 41650, notice shall be given as provided in Health and Safety Code Section 41502, and to all state board members, members of the public requesting such notice in writing, and all state and local governmental agencies having jurisdiction by law with respect to the proposed action.

Note: Authority cited: Section 39601, Health and Safety Code. Reference: Sections11125, ~~and 11423~~ 11346.4,Government Code, and Section 41502, Health and Safety Code.

* * *

60004. Testimony and Record of Proceedings. (a) It is the board's policy to encourage and allow interested persons to present oral as well as written testimony at public hearings and meetings held by the board or the Executive Officer. Oral testimony shall be permitted if, no later than 15 days prior to the hearing, an interested person or duly authorized representative submits in writing to the board secretary a request to present oral testimony. ~~However,~~ Except for hearings held pursuant to Section 41650 of the Health and Safety Code, where no such request is received, the state board or the Executive Officer, as the case may be, shall have discretion to limit interested persons to the presentation of written testimony only. ~~In all-instances,-where-oral-testimony-is-either-permitted-pursuant-to-this section-or-required-pursuant-to-Health-and-Safety-Code-Section-41651,~~ The

chairperson, or the Executive Officer, may impose reasonable limitations on the scope, duration, and manner of presentation of oral testimony. To the extent practicable, such limitations shall be set forth in the hearing notice.

(b) The state board may specify the date by which comments submitted in writing must be received for them to be considered, provided that, except for emergency hearings, the deadline for filing written comments shall be at least 45 days from the date of publication of the staff report. Any deadline for receipt of written comments shall be contained in the hearing notice. The state board shall accept for consideration written comments submitted after the deadline specified in the hearing notice but by the hearing date on a detailed factual showing that the comments could not have been provided to the state board by the deadline by reason of factors beyond the control of the person submitting the comments, and that the comments were submitted as expeditiously as reasonably practicable following the deadline.

~~(b)~~ (c) At any public hearing held pursuant to Health and Safety Code Section 41650, regarding state board review of nonattainment area plans, ~~all-interested-persons-shall-be-permitted-to-present-both-written-and-oral-testimony.~~ representatives from districts included within the nonattainment area and the designated air quality planning agency shall have the right to question and solicit testimony from qualified representatives of the state board staff on the matter being considered. The state board may, by affirmative vote of four members, place reasonable limits on such right. With regard to any Executive Officer hearing held under Section 41650, the state board may impose such limits as part of its delegation to the Executive Officer.

~~(c)~~ (d) The proceedings shall be recorded electronically, or by other appropriate means. At the request of the state board, the Executive Officer, or any interested person, the hearing shall be recorded by a certified court reporter and the cost thereof borne by the person making the request.

Note: Authority cited: Sections 39500, 39601, Health and Safety Code. Reference: Sections ~~11425~~ 11346.5, 11346.8, Government Code and Sections 40451, 41502, 41650, 41651, Health and Safety Code.

60005. Staff Reports. (a) Where a public hearing by the state board is required by law, or when the Executive Officer proposes to take action following a public hearing or public comment period, a staff report, together with the proposed rule, regulation order, or standard, shall be prepared and published by the staff of the state board. ~~at least 30 days before the date of the public hearing.~~ Where a public hearing is required pursuant to the requirements of Chapter 3.5 (commencing with Section 11340), Part 1, Division 3, Title 2 of the Government Code, the staff report shall be published at least 45 days before the date of the public hearing. For all other public hearings, the staff reports shall be published at least 30 days before the date of the public hearing. Notwithstanding the foregoing provisions, if the state board proposes to take emergency action after public hearing, including but not limited to action pursuant to Government Code Section 11346.1(b) and the emergency provisions of Health and Safety Code Section 41502, the staff report shall be published as early as reasonably practicable prior to the public hearing. Staff reports shall be distributed to all governmental agencies having jurisdiction by law with respect to the proposed activity and to persons who have requested such reports.

(b) Except for documents determined to be a trade secret pursuant to Sections 91000, et. seq., of Title 17, California Administrative Code, or documents otherwise exempt from disclosure pursuant to the Public

Records Act (Government Code Sections 6250 et. seq.), copies of documents reviewed in connection with the consideration of issues discussed in staff reports, and written comments received from interested persons, shall be made available for inspection and copying upon request.

(c) It is the policy of the state board to provide a reasonable opportunity for interested persons to review and comment upon staff reports prepared on items for which a public hearing is required. The notice required by Section 60001 shall therefore describe the manner in which a staff report may be obtained for review and comment, and general subject matter addressed in the staff report and the specific staff person to whom the request for a copy and any comment shall be addressed.

(d) It is the policy of the state board to prepare staff reports in a manner consistent with the environmental protection purposes of the state board's regulatory program and with the goals and policies of the California Environmental Quality Act (CEQA: Public Resources Code Sections 21000 et. seq.). Therefore, all staff reports shall contain a description of the proposed action and in a separate section, an assessment of anticipated significant long or short term adverse environmental impacts associated with the proposed action and a succinct analysis of those impacts. The adverse impacts to be considered are direct and indirect effects on land, air, water, and minerals (including energy supply or use, flora, fauna, noise, and objects of historic or aesthetic significance). The analysis shall address possible mitigation measures and alternatives to the proposed action and any irreversible environmental changes or growth-inducing impacts.

(e) The Executive Officer shall prescribe guidelines for reimbursement of the state board's cost of compliance with subsection (a), for the format of staff reports, and such other related requirements as the Executive Officer deems appropriate.

Note: Authority cited: Section 39601, Health and Safety Code. Reference: Section 41502, Health and Safety Code, Sections 11125.1, 11346.1, Government Code.

Section 60008.2. Statement of Reasons for Proposed Rulemaking

(a) Where a public hearing is required pursuant to Chapter 3.5 (commencing with Section 11340), Part 1, Division 3, Title 2 of the Government Code, the statement required by Government Code Section 11346.7 shall be prepared by the staff of the state board prior to the time the notice referred to in Section 60001(c) is published and made available to the public. The notice shall inform the reader that such statement has been prepared.

(b) Prior to final adoption of a regulation, the statement shall be updated pursuant to Government Code Section 11346.7.

Note: Authority cited: Section 39601, Health and Safety Code. Reference: Sections 11346.6, 11346.7, Government Code.

Section 60008.3. Rulemaking File. For every rulemaking for which a public hearing is required pursuant to chapter 3.5 (commencing with Section 11340), Part 1, Division 3, Title 2 of the Government Code, the secretary of the state board shall maintain a file as required by Government Code Section 11347.3.

Note: Authority cited: Section 39601, Health and Safety Code. Reference: Section 11347.3, Government Code.

* * *

60013. Confirmation of Emergency Action. Where the state board takes action under emergency conditions, and such action is subject to ~~the Administrative Procedure Act (Government Code Sections 11420-11427)~~, Chapter 3.5 (commencing with Section 11340), Part 1, Division 3, Title 2 of the Government Code, the state board or the Executive Officer shall confirm such action within 120 days in accordance with the provisions of Government Code Section ~~11422.1~~ 11346.1 if it is determined that the action should have legal effect for more than 120 days.

Note: Authority cited: Section 39601, Health and Safety Code. Reference: Section ~~11422.1~~ 11346.1, Government Code.

TATE OF CALIFORNIA
AIR RESOURCES BOARD
102 Q STREET
BOX 2815
RAMENTO, CA 95812
16) 322-2884

EDMUND G. BROWN JR., Governor

June 18, 1980

Mr. Herbert W. Nobriga
Office of Administrative Hearings
717 K Street, Suite 409
Sacramento, CA 95814

RE: Request for Opinion on AB 1111 and AB 939

Dear Mr. Nobriga:

As you know, the Air Resources Board is currently considering adoption of amendments to its administrative regulations to implement AB 1111 and AB 939, which become effective July 1, 1980. AB 939 requires that for hearings to consider action on proposed regulations be on at least 45 days notice (Government Code Section 11346.4). AB 939 also provides that the notice of proposed action on a proposed regulation shall include:

> "The date by which comments submitted in writing must be received to present statements, arguments, or contentions in writing relating to the proposed action in order for them to be considered by the state agency before it adopts, amends, or repeals a regulation." (Government Code Section 11346.5(a)(7))

Additionally, AB 939 enacts Government Code Section 11346.8, which contains the following language formerly contained in Government Code Section 11425:

> "On the date and at the time and place designated in the notice the state agency shall afford any interested person or his duly authorized representative, or both, the opportunity to present statements, arguments, or contentions in writing, with or without opportunity to present the same orally. The state agency shall consider all relevant matter presented to it before adopting, amending or repealing any regulation.

We are proposing that Section 60004 of Title 17, California Administrative Code include the following:

> "The state board may specify the date by which comments submitted in writing must be received for them to be considered, provided that, except for emergency hearings, the deadline for filing written comments shall be at least 30 days from the date of publication of the staff report. Any deadline for receipt of written comments shall be contained in the hearing notice."

We would appreciate your opinion whether, in light of the above-cited provisions, AB 1111 and AB 939 authorize a rulemaking body to establish in the hearing notice a deadline, prior to the rulemaking hearing but not less than 30 days following publication of the hearing notice, by which written comments must be submitted for them to be considered.

Thank you for your consideration of this request.

Very truly yours,

W. Thomas Jennings
Staff Counsel

STATE OF CALIFORNIA—STATE AND CONSUMER SERVICES AGENCY EDMUND G. BROWN JR., Governor

DEPARTMENT OF GENERAL SERVICES
OFFICE OF ADMINISTRATIVE HEARINGS
[illegible] K STREET, SUITE 401
[illegible]RAMENTO 95814 445-4926
[illegible]0 VAN NESS, 11TH FLOOR
[illegible]AN FRANCISCO 94102
314 WEST FIRST STREET
LOS ANGELES 90012

June 24, 1980

Mr. W. Thomas Jennings
Staff Counsel
Air Resources Board
1102 Q Street
Sacramento, CA 95812

Dear Mr. Jennings:

Reference is made to your letter of June 18, 1980, about the conduct of hearings on proposed regulations.

In my opinion, a state regulatory agency may set a deadline for written testimony at the hearing which is not less than 30 days after notice of the hearing is published.

Therefore, your proposed 17 Cal. Adm. C. Section 60004 appears lawful to me.

Best wishes,

HERBERT W. NOBRIGA
Director

HWN:ap

RECEIVED BY
Office of the Secretary

OCT 16 1980

Resources Agency of California

State of California
AIR RESOURCES BOARD

Resolution 80-47

August 28, 1980

WHEREAS, the Air Resources Board (Board) and the Environmental Protection Agency have established health-based ambient air quality standards for oxidant and ozone, respectively, and these standards are frequently exceeded in several of the State's air basins, including the South Coast Air Basin; and

WHEREAS, Health and Safety Code Sections 39003, 39500, 39602, and 41500 authorize the Board to coordinate, encourage, and review efforts to attain and maintain state and national ambient air quality standards; and

WHEREAS, Health and Safety Code Sections 39600 and 39605 authorize the Board to do such acts as may be necessary to execute the powers and duties granted to and imposed upon the Board and to assist the air pollution control districts; and

WHEREAS, the suggested control measure for the control of emissions of volatile organic compounds (VOC) from pharmaceutical and cosmetics manufacturing was developed by the South Coast Air Quality Management District (SCAQMD) as a part of that District's participation in a statewide effort to develop suggested control measures, and has been approved under the Suggested Control Measure Development Process and by a technical review group comprised of representatives of EPA, ARB, and several air pollution control districts; and

WHEREAS, the California Environmental Quality Act (CEQA) and ARB regulations require that the Board not approve any action proposed for which significant environmental effects have been identified if there are feasible mitigation measures or feasible alternatives available which would substantially lessen any such effects which the action may cause; and

WHEREAS, the Board, after at least 45 days notice, has held a public meeting on this matter, and has heard and considered the comments presented by the ARB staff, affected industries, and other interested persons; and

WHEREAS, the Board finds:

1. That emissions of volatile organic compounds from pharmaceutical and cosmetics manufacturing contribute to violations of the state and

national ambient standards for oxidant and ozone, in several of the State's air basins;

2. The VOC emissions from existing sources can be reduced by up to 90 percent of the present emission rate, resulting in an air quality benefit.

3. That such emission reductions are technologically feasible and cost-effective.

4. That the measure as proposed would exempt from control requirements 1,1,1-trichloroethane, trichlorotrifluoroethane and methylene chloride with the result that there may be an expanded use of these compounds as substitutes for controlled compounds since they are relatively photochemically unreactive;

5. That the uncontrolled use of 1,1,1-trichloroethane, trichlorotrifluoroethane, and methylene chloride may result in adverse environmental impacts as discussed in the staff report;

6. That no other significant environmental effects are likely to result from the approval of this measure by the Board and by its adoption and implementation by the districts.

NOW, THEREFORE, BE IT RESOLVED, that the Air Resources Board approves the suggested control measure for the control of VOC emissions from pharmaceutical and cosmetics manufacturing as set forth in revised Attachment I to this Resolution; and

BE IT FURTHER RESOLVED, that the Executive Officer is directed to forward the suggested control measure along with this resolution to districts which need reductions in VOC emissions to achieve and maintain state and national ambient air quality standards with a recommendation that these districts consider adoption of a rule of equivalent effectiveness; and

BE IT FURTHER RESOLVED, that the Executive Officer is directed to forward the suggested control measure along with this resolution to districts which have already adopted similar rules with the recommendation that such rules be re-examined and amended as appropriate to make them consistent with this measure; and

BE IT FURTHER RESOLVED, that subsequent investigations which confirm alleged or suspected adverse environmental impacts associated with the uncontrolled use of 1,1,1-trichloroethane, trichlorotrifluoroethane or methylene chloride may trigger reconsideration of this measure by the Board to include mitigation requirements for such impacts pursuant to the California Environmental Quality Act. Where such impacts are identified for one or more of the above compounds, the additional mitigation requirements would depend on the expected impacts, and could include: 1) removal of the exemption for such compound(s) from this and possibly other district control measures, or 2) requiring the application

of best available control technology to reduce emissions of such compound(s) from existing sources, or 3) partially or totally banning atmospheric emissions of such compound(s), or 4) any other action deemed necessary by the Board in order to satisfy the requirements of Division 26 of the Health and Safety Code, the CEQA, and ARB regulations; and

BE IT FURTHER RESOLVED, that the Board revises the proposed, suggested control measure by the addition of Sections d(6) and d(7) to provide for regulating increases in emissions of 1,1,1-trichloroethane, trichlorotrifluoroethane, and methylene chloride in order to mitigate potential, harmful environmental effects which would result from increased use of such compounds.

BE IT FURTHER RESOLVED, that the Board recommends that in considering the adoption of the attached suggested control measure, districts should consider the economic problems of small businesses and other problems of local concern and afford appropriate relief which does not significantly reduce the effectiveness of the measure; and

BE IT FURTHER RESOLVED, that the Board recommends that prior to adopting such control measure, the districts consider the potential adverse environmental effects of the exemption of 1,1,1-trichloroethane, trichlorotrifluoroethane, and methylene chloride and further consider measures to mitigate any such effects which they find would result from such exemptions.

BE IT FURTHER RESOLVED, that the Executive Officer is directed to provide assistance to any district requesting assistance in adopting, interpreting, or implementing the suggested control measure.

I certify that the above is a true and correct copy of Resolution 80-47 as passed by the Air Resources Board.

Sally Rump
Board Secretary

Attachment I

Pharmaceutical and Cosmetics
Manufacturing Operations
September 1980

(a) Definitions

For the purpose of this rule, the following definitions shall apply:

(1) Volatile Organic Compounds (VOC) are compounds of carbon, excluding carbon monoxide, carbon dioxide, carbonic acid, metallic carbides or carbonates, ammonium carbonate, ethane, methane, 1,1,1 trichloroethane, methylene chloride, and trichlorotrifluoroethane, that have an absolute vapor pressure greater than 26 mm Hg (0.5 psi) at 20°C.

(2) A pharmaceutical manufacturing plant is any plant producing or blending chemicals for use in pharmaceutical products and/or manufacturing pharmaceutical products by chemical processes.

(3) A cosmetics manufacturing plant is any plant producing or blending chemicals for use in cosmetic products and/or manufacturing cosmetic products by chemical processes.

(4) In-process tanks are containers used for mixing, blending, heating, reacting, holding, crystallizing, evaporating, or cleaning operations in the manufacture of pharmaceuticals or cosmetics.

(b) Applicability

The provisions of this rule shall apply to:

(1) The manufacture of pharmaceutical and cosmetic products by chemical processes.

(2) The production and separation of medicinal chemicals such as antibiotics and vitamins from microorganisms.

(3) The manufacture of botanical and biological products by the extraction of organic chemicals from vegetative materials or animal tissues.

(4) The formulation of pharmaceuticals into various dosage forms such as tablets, capsules, injectable solutions or ointments, that can be taken by the patient immediately and in an accurate amount; and the formulation of cosmetics into configurations intended for consumer use.

(c) Equipment Requirements

(1) (A) An owner/operator shall not use reactors, distillation columns, crystallizers, centrifuges emitting more than 15 pounds per day of VOC for each permit unit unless the vents are equipped with surface condensers or equivalent control devices.

(B) An operator shall not use surface condensers for the control of organic gases unless the condenser outlet gas temperature is controlled as shown in the following table:

Absolute Vapor Pressure of VOC at 20°C	Maximum Condenser Outlet Gas Temperature
0.5 psi to 1.0 psi	25°C
1.0 psi to 1.5 psi	10
1.5 psi to 2.9 psi	0
2.9 psi to 5.8 psi	-15
over 5.8 psi	-25

(C) Equivalent control devices may be used with the approval of the Executive Officer. Equivalent control is achieved when VOC emissions are reduced by at least as much as would have occurred using a surface condenser per section (b)(1)(B).

(2) An operator shall not use centrifuges, rotary vacuum filters, or any other filters, or devices having an exposed liquid surface where the liquid contains VOC having a total VOC vapor pressure of 0.5 psi or more at 20°C, unless such devices incorporate a hood or enclosure with a delivery system or ductwork to collect VOC emissions, exhausting to a carbon absorber, or equivalent control method approved by the Executive Officer.

(3) An operator shall not use in-process tanks for material containing VOC unless an apparatus or cover which prevents VOC evaporation is provided for the tank. The cover shall be closed or in place on the tank at all times except while loading or unloading the tank.

(d) Operating Requirements and One-Time Reporting Requirement
An operator shall conform to the following operational requirements:

(1) An operator shall not use air dryers or production equipment exhaust systems that emit 330 pounds per day or more of volatile organic compounds for each basic permit unit unless the emission of such organic materials into the atmosphere has been reduced by at least 90 percent by weight.

(2) Notwithstanding the provisions of paragraph (d)(1), an operator using air dryer or production equipment exhaust systems that emit less than 330 pounds per day of volatile organic compounds shall reduce the emissions of such organic materials into the atmosphere to less than 33 pounds per day.

(3) An operator shall not transfer VOC having a vapor pressure greater than 4.1 psi at 20°C, from any truck or rail car into any storage tank of a 2,000 gallon capacity or greater, unless VOC emissions during transfer are reduced by 90 percent by weight.

(4) An operator shall install pressure/vacuum vents set at $\pm$ 0.03 psig on all storage tanks that store VOC with a vapor pressure greater than 1.5 psia at 20°C, unless a more effective control system, approved by the Executive Officer, is used.

(5) An operator shall repair all leaks from which a liquid, containing VOC, can be observed to be running or dripping. The repair shall be completed the first time the equipment is off-line for a period of time long enough to complete the repair.

(6) Notwithstanding any other provision of this regulation an owner or operator of any pharmaceutical or cosmetics manufacturing

facility shall not increase the use of or substitute 1,1,1-trichloroethane, methylene chloride, or trichlorotrifluoroethane for any other organic solvent, chemical, or compound unless the facility meets the emission limitation requirements of this regulation for the total amounts used of such compounds.

(7) The owner or operator of pharmaceutical or cosmetics manufacturing facilities which emit 1,1,1-trichloroethane, methylene chloride or trichlorotrifluoroethane shall establish the average and maximum daily emission rates of each of these compounds based on actual usage and operating conditions over a three consecutive year period and shall submit such information to the Executive Officer within 90 days of the date of adoption of this Rule.

(e) Exemptions

The provisions of this rule shall not apply to facilities that emit, at the design production rating, 15 pounds per day or less of volatile organic compounds.

(f) Effective Dates

The owner or operator of any pharmaceutical or cosmetics manufacturing facility subject to this rule shall comply with the provisions of this rule on or before January 1, 1983.

RECEIVED BY
Office of the Secretary

OCT 16 1980

Resources Agency of California

State of California

AIR RESOURCES BOARD

Response to Significant Environmental Issues

ITEM: Adoption of a Control Measure of the Control of Volatile Organic Compound Emissions from Pharmaceutical and Cosmetics Manufacturing Operations

PUBLIC HEARING DATE: August 28, 1980

RESPONSE DATE: August 28, 1980

ISSUING AUTHORITY: Air Resources Board

COMMENT: The only environmental issue identified for the proposed measure was the possible increase in the emissions of 1,1,1-trichloroethane, methylene chloride and trichlorotrifluoroethane. The first two of these compounds are suspected of being carcinogenic, mutagenic or teratogenic. Trichlorotrifluoroethane and 1,1,1-trichloroethane are suspected of contributing to stratospheric ozone depletion.

RESPONSE: To satisfy the requirements of Division 26 of the Health and Safety Code, the California Environmental Quality Act and Air Resources Board regulations, the Board amended the suggested control measure, in accordance with the attached resolution (Resolution 80-47), by including Sections d(6) and d(7) in the approved control measure (attached). Section d(6) would require any pharmaceutical or cosmetic manufacturing facilities substituting or increasing the use of 1,1,1-trichloroethane, methylene chloride, or trichlorotrifluoroethane to meet the emission requirements of the suggested control measure. Section d(7) would require the one time reporting of the current usage of 1,1,1-trichloroethane,methylene chloride, or trichlorotrifluoroethane. This last requirement would establish a current baseline emission rate of these compounds from the pharmaceutical and cosmetics industry.

CERTIFIED: Sally Rump
Board Secretary

DATE: 10/14/80

State of California

Memorandum

RECEIVED BY
Office of the Secretary

OCT 16 1980

Resources Agency of California

To : Huey D. Johnson
Secretary
Resources Agency

Date : October 16, 1980

Subject : Filing of Notice of Decision of the Air Resources Board

From : **Air Resources Board**

Pursuant to Title 17, Section 60007(b), and in compliance with Air Resources Board certification under section 21080.5 of the Public Resources Code, the Air Resources Board hereby forwards for posting the attached notice of decision and response to environmental comments raised during the comment period.

Sally Rump

Sally Rump
BOARD SECRETARY

att: Resolution 80-47

State of California

AIR RESOURCES BOARD

Resolution 80-48

July 24, 1980

WHEREAS, the Air Resources Board (Board) and the Environmental Protection Agency have established health-based ambient air quality standards for oxidant and ozone, respectively, and these standards are frequently exceeded in several of the State's air basins, including the South Coast Air Basin; and

WHEREAS, Health and Safety Code Sections 39003, 39500, 39602, and 41500 authorize the Board to coordinate, encourage, and review efforts to attain and maintain state and national ambient air quality standards; and

WHEREAS, Health and Safety Code Sections 39600 and 39605 authorize the Board to do such acts as may be necessary to execute the powers and duties granted to and imposed upon the Board, to assist the air pollution control districts; and

WHEREAS, the suggested control measure for the control of emissions of volatile organic compounds from the graphic arts industry was drafted by the Board staff and has been approved under the Suggested Control Measure Development Process, by a technical review group consisting of representatives of EPA, ARB, and several air pollution control districts; and

WHEREAS, the California Environmental Quality Act and Board regulations require that the Board not take any action which would have adverse environmental impacts unless the Board responds to all significant environmental issues raised and takes all feasible measures to mitigate such impacts; and

WHEREAS, the Board has held a duly noticed public meeting on this matter, and has heard and considered the comments presented by representatives of the ARB, districts, affected industries, and other interested persons and agencies; and

WHEREAS the Board finds:

That emissions of volatile organic compounds (VOC) from the graphic arts industry contribute to violations of the state and national ambient air quality standards for oxidant and ozone in several of the State's air basins; and

RECEIVED BY
Office of the Secretary

SEP 19 1980

Resources Agency of California

That VOC emissions from such sources can be reduced by up to 85 percent of the present emission rate by the means set forth in the suggested control measure; and

That such emission reductions are technologically feasible and economically reasonable; and

That there are no significant adverse effects on air quality likely to result from adoption and implementation of the suggested control measure.

NOW, THEREFORE, BE IT RESOLVED, that the Board approves the suggested control measure for the control of VOC emissions from the graphic arts industry as set forth as Attachment I to this Resolution; and

BE IT FURTHER RESOLVED, that the Executive Officer is directed to forward the suggested control measure to districts which need reductions in VOC emissions to achieve and maintain state or national ambient air quality standards, with a recommendation that these districts consider adoption of the suggested control measure or a rule of equivalent effectiveness; and

BE IT FURTHER RESOLVED, that the ARB staff will confer with representatives of the graphic arts industry to determine whether the technologies necessary to comply with the measure will be available within the time schedule provided in the control measure and will be economically feasible. If the staff finds that technically feasible and economically reasonable technologies may not be available, then staff will review the suggested control measure, propose revisions as appropriate, and urge that districts which have adopted graphic arts rules amend those consistent with any ARB action.

BE IT FURTHER RESOLVED, that the Executive Officer is directed to provide assistance to any district requesting assistance in adopting, interpreting, or implementing the suggested control measure.

I certify that the above is a true and correct copy of Resolution 80-48, as adopted by the Air Resources Board

Sally Rump

Sally Rump, Board Secretary

Attachment I

State of California
AIR RESOURCES BOARD

July 24, 1980

SUGGESTED CONTROL MEASURE FOR THE CONTROL OF VOLATILE ORGANIC COMPOUNDS EMISSION FROM THE GRAPHIC ARTS INDUSTRY

I. After July 1, 1982, any person operating a publication gravure printing line shall comply with one or more of the following requirements.

A. Use only low-solvent inks and coatings as specified in Section IV, or

B. Install and operate on the line, an approved emission control system as defined in Section V, with a control device efficiency of 95 percent on a mass basis, or 40 ppm VOC (by volume) if the control efficiency is lower than 95 percent, but in no event less than 90 percent, or

C. Demonstrate to the satisfaction of the Air Pollution Control Officer that the emissions from the line have been reduced by at least 85 percent, overall.

II. After January 1, 1983, any person operating any equipment for packaging gravure, specialty gravure, wall-paper screen printing, and flexographic printing and coatings on paper and paperboard substrates, excluding detergent packages, shall comply with one or more following requirements:

A. Use only low-solvent inks, coatings, and adhesives as specified in Section IV, or

B. Install and operate on the line, an approved emission control system as defined in Section V, with a control device efficiency of at least 90 percent on a mass basis, or

C. Demonstrate to the satisfaction of the Air Pollution Control Officer that the emissions from the line have been reduced by at least 75 percent, overall.

III. Any person operating equipment for packaging gravure, specialty gravure, wall-paper screen printing, and flexographic printing, and coating on nonporous substrates and detergent packages shall comply with one or more following requirements:

A. After July 1, 1985, any person operating any equipment subject to this Section shall use only low-solvent inks, coatings, and adhesives, as specified in Section IV, or

B. After January 1, 1983, any person operating any equipment subject to this Section shall install and operate on the line, an approved emission control system as defined in Section V, with a control device efficiency of at least 90 percent on a mass basis; or

C. After January 1, 1983, demonstrate to the satisfaction of the Air Pollution Control Officer that the emissions from the line have been reduced by at least 75 percent, overall.

IV. LOW-SOLVENT INK, COATING AND ADHESIVE:

Any ink, coating, or adhesive must satisfy one of the following conditions in order to be deemed a low-solvent ink, coating, or adhesive for the purposes of this measure.

A. The ink, coating, or adhesive as applied contains less than 300 grams of volatile organic compounds per liter, excluding water, provided that the total volatile content does not exceed that of other inks, coatings or adhesives previously used by the operator for the same or equivalent products.

B. The volatile portion of the ink, coating, or adhesive contains no more than 25 percent volatile organic compounds on a volume basis, provided that the total volatile content does not exceed that of other inks, coatings or adhesives previously used by the operator for the same or equivalent products.

V. APPROVED EMISSION CONTROL SYSTEM

An approved emission control system is a system for reducing emissions of volatile organic compounds, consisting of collection and control devices which are approved by the Air Pollution Control Officer and which satisfy the following conditions.

A. It includes a control device designed and operated to achieve the efficiency specified in the applicable section of this rule at all times during normal operation of the line being controlled; and

B. It includes a collection system which vents all drying oven exhaust to the control device; and

C. It includes a collection system which is designed and

operated for maximum collection of fugitive emissions.

VI. COMPLIANCE SCHEDULES

A. A person subject to the requirements of Section I(A) or Section II(A) shall submit a control plan by October 15, 1980, which designates the measures and increments of progress that will be taken to achieve compliance.

B. Any person subject to the requirements of Section I(B) and (C) or Section II(B) and (C) must meet the following increments of progress.

1. Submit final plans for the emission control system and process equipment before October 15, 1980;
2. Award contracts or issue purchase orders for the emission control system and process equipment before December 15, 1980;
3. Initiate onsite construction or installation of the emission control and process equipment before July 1, 1981; and
4. Complete onsite construction or installation of the emission control and process equipment before June 1, 1982; and
5. Achieve final compliance before July 1, 1982.

C. Except as provided in D below, any person subject to the requirements of Section III(A), shall submit a control plan by March 15, 1981, which designates the increments of progress that will be taken toward compliance. As a minimum, the control plan shall include provisions for reducing the amounts of solvent used in all inks, coatings, and adhesives applied on the line*, in accordance with following schedule:

1. By July 1, 1981: Begin production line testing of low-solvent inks, coatings or adhesives.
2. By January 1, 1982: Reduce overall solvent use on the line, by at least 20 percent.
3. By January 1, 1983: Reduce overall solvent use on the line by at least 40 percent
4. By January 1, 1984: Reduce overall solvent use on the line by at least 65 percent.
5. By July 1, 1985: Be in full compliance with the requirements of Section III(A).

* "When the Air Resources Board has endorsed a suggested control measure for the implementation of the bubble concept, the districts which have adopted a rule to control emissions from the graphic arts industry are encouraged to amend their graphic arts rules to make Sections VI(C) and VI(D) applicable to 'lines' instead of 'line'."

The allowable emissions necessary to comply with the overall percent reduction, above, shall be calculated using as a baseline, the average of the actual amount of solvent used for each line for any two years selected from the years: 1977, 1978, 1979 and 1980.

The control plan required under this section shall identify which two of the four years have been selected, and the plan shall delineate the quantity of solvent used for each line for each of the two baseline years.

Any person who fails to achieve compliance with this schedule shall comply with the requirements of Section III(B) or (C) within one year from the appropriate compliance date set forth in the above schedule of increments of progress.

D. Any person subject to the requirements of III(A) whose annual solvent consumption is less than 100 tons per year shall submit a control plan by March 15, 1982, which designates the increments of progress toward compliance. As a minimum, the control plan shall include provisions for reducing the amounts of solvent used in all inks, coatings, and adhesives applied

on the line,* in accordance with following schedule:

1. By January 1, 1983: Reduce overall solvent use on the line, by at least 20 percent.
2. By January 1, 1984: Reduce overall solvent use on the line, by at least 40 percent.
3. By January 1, 1985: Reduce overall solvent use on the line, by at least 65 percent.
4. By July 1, 1986: Be in full compliance with the requirements of Section III(A).

The allowable emissions necessary to comply with the overall percent reduction, above, shall be calculated using as a baseline, the average of the actual amount of solvent used for each line for any two years selected from the years: 1977, 1978, 1979 and 1980. The control plan required under this section shall identify which two of the four years have been selected, and the plan shall delineate the quantity of solvent used for each line for each of the two baseline years.

* "When the Air Resources Board has endorsed a suggested control measure for the implementation of the bubble concept, the districts which have adopted a rule to control emissions from the graphic arts industry are encouraged to amend their graphic arts rules to make Sections VI(C) and VI(D) applicable to 'lines' instead of 'line'."

Any person who fails to achieve compliance with this schedule shall comply with requirements of Section III(B) or (C) within one year from the appropriate compliance date set forth in the above schedule of increments of progress.

E. Any person subject to the requirements of Section III(B) or (C) must meet the following increments of progress:

1. Submit final plans for the emission control system and process equipment before March 15, 1981;
2. Award contracts or issue purchase orders for the emission control system and process equipment before July 15, 1981;
3. Initiate onsite construction or installation of the emission control and process equipment before December 1, 1981;
4. Complete onsite construction or installation of the emission control and process equipment before December 1, 1982; and
5. Achieve final compliance before January 1, 1983.

VII. EXEMPTION

A. This Rule shall not apply to any printing, coating, or laminating facility which emits less than 15 tons per year of volatile organic compounds.

VIII. DEFINITIONS

Coating: the application of a uniform layer of material across the entire width of a substrate. Those machines which have both coating and printing units should be considered as performing a printing operation.

Control device: equipment such as an incinerator or adsorber used to prevent air pollutants from reaching the ambient air.

Converting Operation: coating, waxing, laminating, extrusion coating and printing, for fabrication of base materials. The base materials are then used to produce wraps, bags, and other preformed packages.

Doctor blade: a steel blade used to scrape excess ink from a printing plate.

Drying Oven: an oven used to hasten the process of drying printed or coated material.

Flexible packaging industry: establishments that convert materials consisting of light gauge papers, plastic films, cellulosic films such as cellophane, thin gauge metal sheets such as aluminum foil or steel foil, and combinations thereof into a variety of product packages.

Flexographic printing: the application of words, designs, or pictures to a substrate by means of a roll printing technique in which the pattern is applied to an image carrier made of rubber or other elastomeric materials. As compared to gravure (intaglio) printing, the image to be printed via flexography is raised above the printing surface while in the gravure process the image to be printing is sunk below the surface.

Fugitive emission: emissions of volatile organic compound from any portion of the printing, coating or laminating operation other than from the drying oven.

Graphic arts industry: for this control measure, the term graphic arts refers to only publication gravure, packaging gravure, web-feed wallpaper screen printing, specialty gravure, flexographic printing operations, or any coating or laminating operation that manufactures flexible packaging material for the packaging industry.

Gravure printing: an intaglio printing operation in which the ink is transferred from minute etched wells on a plate to the substrate which is supported by an impression roller, with excess ink removed from the plate by a doctor blade.

Intaglio printing: printing done from a plate in which the image is sunk below (etched or engraved into) the surface.

Line: The minimum equipment which is required for the application and/or curing of inks and/or coatings on a continuous substrate, including the ink and/or coating applicators and heating oven(s) and associated ink and coating mixing equipment.

Nonporous Substrate: Any substrate other than paper or paperboard, including but not limited to foil, polyethylene, polypropylene, cellophane, metalized polyester, nylon and polyethylene terephthalate (mylar), but not including wood, metal, or ceramic materials.

Packaging gravure: gravure printing on paper, paperboard, foil, film or other substrates which are to be used to produce containers or packages.

Porous substrate: Paper or paperboard.

Publication gravure: gravure printing on paper which is subsequently formed into books, magazines, catalogs, brochures, directories, newspaper supplements or other types of printed material.

Screen printing: a process where the printing ink passes through a refined form of stencil to a web or fabric. The stencil openings determine the form and dimension of the imprint.

Specialty gravure printing: printing that uses the gravure process for production of wall and floor covering, decorated household paper products such as towels and tissues, cigarette filter tips, vinyl upholstery, woodgrains, and a wide variety of other products.

Web: a continuous sheet of substrate.

Web-feed: an automatic system which supplies substrates from a web.

State of California
AIR RESOURCES BOARD

Response to Significant Environmental Issues

Item: Public Meeting to Consider A Suggested Control Measure For the Control of Volatile Organic Compound Emissions From the Graphic Arts Industry

Public Hearing Date: July 24, 1980

Response Date: July 24, 1980

Issuing Authority: Air Resources Board

Comment: None

Response: N/A

CERTIFIED: Sally Rumpf
BOARD SECRETARY

Date: 9/15/80

RECEIVED BY
Office of the Secretary

SEP 19 1980

Resources Agency of California

State of California

Memorandum

To : Huey D. Johnson
Secretary
Resources Agency

Date : August 17, 1980

Subject: Filing of Notice of Decision of the Air Resources Board

From : **Air Resources Board**

Pursuant to Title 17, Section 60007(b), and in compliance with Air Resources Board certification under section 21080.5 of the Public Resources Code, the Air Resources Board hereby forwards for posting the attached notice of decision and response to environmental comments raised during the comment period.

Sally Rump
BOARD SECRETARY

Attach: Resolution 80-48

RECEIVED BY
Office of the Secretary

SEP 19 1980

Resources Agency of California

State of California
AIR RESOURCES BOARD

Resolution 80-49

July 23, 1980

WHEREAS, Section 39602 of the Health and Safety Code designates the Air Resources Board (ARB) as the air pollution control agency for all purposes set forth in federal law and designates the ARB as the state agency responsible for the preparation of the State Implementation Plan (SIP) required by the Clean Air Act;

WHEREAS, the Clean Air Act as amended in 1977 mandates the revision of the SIP in designated nonattainment areas of the state in order to assure the attainment and maintenance of national ambient air quality standards by specified deadlines;

WHEREAS, Health and Safety Code Sections 41500, 41504, 41650 and 41652 provide that the ARB shall adopt a locally prepared non-attainment plan and authorize the ARB to make such revisions to a nonattainment plan as are necessary to meet the requirements of the Clean Air Act;

WHEREAS, the ARB is the designated lead agency for the Los Angeles County nonattainment plan and has committed itself to a coordinated program for the development of the nonattainment plans for ozone with the active participation of other agencies possessing resources and expertise in the air quality and transportation fields;

WHEREAS, the California Environmental Quality Act and ARB implementing regulations require that an activity not be adopted if feasible alternatives and/or feasible mitigation measures are available which would significantly lessen any negative environmental impacts of the proposed activity;

WHEREAS, on November 29, 1979, the ARB resolved in Resolution 79-79, incorporated by reference herein, that the Los Angeles County APCD's nonattainment plan did not include New Source Review rules which would achieve and maintain state and national ambient air quality standards and do not meet the requirements of the federal Clean Air Act;

WHEREAS, on July 17, 1980, the Los Angeles County APCD Board adopted Regulation XIII, New Source Review, which among other provisions amended Sections (a)(2) and (3) and (e)(1) and (2) of Rule 1311, Power Plants, to purportedly facilitate the issuance of permits for the construction of power plants which would not require mitigation of potential adverse impacts.

WHEREAS, the ARB finds:

1. That the state and national ambient air quality standards for photochemical oxidant (ozone) are exceeded in the Los Angeles County portion of the SEDAB;

2. That organic gases have been demonstrated to be a chemical precursor to photochemical oxidant (ozone), and contribute to or are responsible for exceedance of the state oxidant standard and the national ozone standard within the SEDAB;

3. That further increases in emissions of precursors will interfere with progress toward achievement of the national ambient air quality standard for ozone and of the state air quality standard for oxidant;

4. That, except as provided herein, the major portions of the Los Angeles County APCD adopted Regulation XIII are adequate to meet the requirements of the Clean Air Act.

5. That the nonattainment plan adopted on November 29, 1979, for the Los Angeles County APCD by the ARB does not include in legally enforceable regulatory form all control measures needed to demonstrate attainment of the ozone NAAQS, and will be subject to revision in 1982 in order to adopt sufficient measures to demonstrate attainment by 1987 as required by the Clean Air Act.

6. That the adopted language in Rule 1311 - Power Plants in Regulation XIII contains unclear and imprecise requirements, and as a regulatory measure is meaningless and unenforceable;

7. That the requirements contained in Sections (a)(2) and (3) and (e)(1) and (2) of Rule 1311, by potentially facilitating new power plant construction without mitigation measures regarding emissions offsets based on speculations regarding future air quality do not meet the requirements of the Clean Air Act and the EPA implementing regulations (40 CFR Part 51, Appendix S) and EPA guidance set forth in 44 Fed. Reg. 51924, at 51958, September 5, 1970, including but not limited to the following:

   a. that exemptions of major new sources from offset requirements will be permitted only if it is certain that the area where the source is to locate will be an attainment area by the time the source commences operation; and

b. That the finding regarding attainment must be based upon an approved SIP which demonstrates attainment by the deadline specified in Clean Air Act Section 172 based exclusively on currently adopted, approved, and enforceable requirements; plans where approval under Part D is conditioned on submittal of additional material, plans containing schedules for submittal of additional material rather than enforceable regulatory measures, and plans where additional submittals are needed by July 1, 1982 in order to demonstrate attainment by 1987 do not fulfill this requirement.

8. That adoption of Regulation XIII, Rule 1311 as amended by the District would result in adverse environmental impacts on air quality by exempting certain major sources from offset requirements, contrary to CEQA and ARB regulations.

NOW THEREFORE BE IT RESOLVED, that the Los Angeles County APCD's Regulation XIII be amended as shown in Attachment A attached hereto. The Board hereby directs the Executive Officer to submit Regulation XIII, as amended, to the EPA as part of the State Implementation Plan for the Los Angeles County APCD.

BE IT FURTHER RESOLVED, that Los Angeles County APCD's Regulation XIII, Rule 1311- Power Plants, as amended may subsequently be amended by the District in accordance with the procedures set forth in 17 California Administrative Code Section 60008.1.

BE IT FURTHER RESOLVED, that to the extent that rules amended today are in conflict or are not consistent with any other provision of the affected Districts' rules and regulations, the provisions of the amended rules adopted July 23, 1980 shall prevail. The amended rules shall have the same force and effect as a program, rule or regulation adopted by the District and shall be enforced by the District.

I certify that the above is a true and correct copy of Resolution 80-49, as adopted by the Air Resources Board.

Sally Rump

Sally Rump, Board Secretary

ATTACHMENT A

Amend Los Angeles County APCD Regulation XIII, New Source Review, as follows. Specifically see Rule 1311, Power Plants. Deleted language is shown struck out, added language is shown underlined.

LOS ANGELES COUNTY AIR POLLUTION CONTROL DISTRICT

Rule 1300. State Ambient Air Quality Standards

For the purpose of this regulation, all references to the national ambient air quality standards shall be interpreted to include state ambient air quality standards. This rule shall not be enforceable as part of any revision to the Los Angeles County Air Pollution Control District's portion of the State Implementation Plan.

Rule 1301. General

(a) Purpose

This regulation sets forth the requirements for the preconstruction review of new stationary sources or modifications to existing stationary sources, to ensure that the construction of such stationary sources does not interfere with the attainment of the national ambient air quality standards, without unnecessarily restricting future economic growth within the District.

(b) Applicability

The requirements of this regulation shall apply to all new stationary sources and modifications which are required pursuant to District rules, to obtain a permit to construct, or in the case of power plants, a Determination of Compliance.

(c) Existing Rules.

This regulation shall supersede Rules 213, 213.1, and 213.2, except that such rules shall apply to applications for permits to construct which have been accepted as complete and to applications for permits to operate facilities which received permits to construct under such rules, prior to the date of adoption of this regulation.

Rule 1302. Definitions

For the purpose of this regulation, the following definitions shall apply:

(a) Affected air contaminant means any non-attainment air contaminant for which the net emission increase from a stationary source of that air contaminant is greater than 68 kilograms (150 pounds) per day, except carbon monoxide, for which the value is an increase of more than 340 kilograms (750 pounds) per day.

(b) Affected Source means a new stationary source or modification to an existing stationary source which results in a net increase in the emissions of any non-attainment air contaminant of more than 68 kilograms (150 pounds) per day, except carbon monoxide, for which the value is an increase of more than 340 kilograms (750 pounds) per day.

(c) Air Contaminant means any air pollutant for which there is a national ambient air quality standard, or precursor to such air pollutant, including but not limited to: carbon monoxide, sulfur dioxide, nitrogen oxides, particulate matter, lead, and organic gases, but excluding methane, 1, 1, 1 trichloroethane, methylene chloride, or trichlorotrifluoroethane.

(d) Best Available Control Technology (BACT) means the more stringent of:

(1) The most effective emission control technique which has been achieved in practice, for such permit unit category or class of source; or

(2) The control technique which will result in the most stringent emissions limitation contained in any State Implementation Plan approved by the Environmental Protection Agency for such permit unit category or class of source.

A specific control technique shall not be required if the owner or operator of the proposed source demonstrates to the satisfaction of the Executive Officer that such control techniques are not available (i.e. that such emissions limitations are not presently achievable); or

(3) Any other emission control technique found by the Executive Officer to be technologically feasible and cost-effective for such class or category of sources or for a specific source.

No control technique, the application of which would result in emissions from a new or modified source in excess of the amount allowable under applicable new source performance standards specified in Regulation IX of these rules and regulations or promulgated by the Environmental Protection Agency pursuant to Section 111 of the Clean Air Act may be considered Best Available Control Technology.

(e) Cogeneration Project means a project which:

(1) makes use of exhaust steam, waste steam, heat or resultant energy from an industrial, commercial, or manufacturing plant or process for the generation of electricity, or,

(2) makes use of exhaust steam, waste steam, or heat from a thermal power plant, in an industrial, commercial, or manufacturing plant or process.

For the purposes of this definition, the "industrial, commercial or manufacturing plant or process" shall not be a thermal power plant or portion thereof. A cogeneration project shall not consist of steam or heat developed solely for electrical power generation. To qualify as a cogeneration project, the processes listed in (1) and (2) above must concurrently recover, for useful purposes, at the first stage of heat transfer, not less than 25 percent of the energy.

(f) Contiguous Property means two or more parcels of land in actual physical contact or separated solely by a public roadway or other public right-of-way.

(g) District means the Los Angeles County Air Pollution Control District.

(h) Executive Officer means Air Pollution Control Officer of the Los Angeles County Air Pollution Control District.

(i) Exempt Permit Unit means a specific article, machine, equipment, or other contrivance which may cause the issuance or control the issuance of air contaminants but which has been exempted from permit requirements by Rule 219.

(j) Intermittent Source means a stationary source which may operate annually, but which emits 80 percent or more of its annual emissions on less than 120 days per year.

(k) Mobile Source means a device by which any person or property may be propelled, moved, or drawn upon the surface, waterways, or through the atmosphere, and which emits air contaminants.

(l) Modeling means using an air quality simulation model based on specified assumptions and data, and which model, assumptions and data have been approved in advance and in writing by the Executive Officer.

(m) Modification means any physical change in, change in method of operation of, or addition to an existing stationary source, requiring an application for permit to construct or operate, except that routine maintenance or repair shall not be considered to be a physical change. A change in the method of operation, unless previously limited by an enforceable permit condition, shall not include:

(1) An increase in the production rate, if such increase does not exceed the maximum design capacity of the source.

(2) An increase in the hours of operation.

(3) A change in ownership of a source.

(n) Permit Unit means any article, machine, equipment, or other contrivance, or combination thereof, which may cause the issuance or control the issuance of air contaminants, and which requires a permit pursuant to these rules and regulations.

(o) Precursor means a substance that, when released to the atmosphere, forms or causes to be formed or contributes to the formation of another air contaminant for which a national ambient air quality standard has been adopted, or whose presence in the atmosphere will contribute to the violation of one or more national ambient air quality standards.

Precursors	Secondary Pollutants
Hydrocarbons and substituted hydrocarbons (reactive organic gases)	a) photochemical oxidant (ozone)
	b) the organic fraction of suspended particulate matter
Nitrogen oxides (NO_x)	a) nitrogen dioxide (NO_2)
	b) the nitrate fraction of suspended particulate matter
	c) photochemical oxidant (ozone)
Sulfur dioxides (SO_x)	a) sulfur dioxide (SO_2)
	b) sulfates (SO_4)
	c) the sulfate fraction of suspended particulate matter.

(p) Seasonal Source means a stationary source which operates during a period of less than 120 days and only within one five consecutive month period per year.

(q) Stationary Source means any structure, building, facility, or installation which emits or may emit any air contaminant. Structure, building, facility or installation means any grouping of air contaminant-emitting activities which is located on a single parcel of land or contiguous property within the District and which is owned or operated by the same person (or by persons under common control). For the purpose of this regulation, such above-described groupings, remotely located but connected only by land carrying a pipeline, shall not be considered one stationary source.

Proposed Rule 1303. Applicability and Analysis

(a) Applicability

The provisions of this rule shall apply to new stationary sources or modifications to existing stationary sources and relocation to non-contiguous property of existing stationary sources as provided in subsection (c) which result in a net emission increase from such stationary sources of any non-attainment air contaminant greater than 68 kilograms (150 pounds) per day, except carbon monoxide, for which the value is an increase of 340 kilograms (750 pounds) per day.

(b) Analysis

The Executive Officer shall deny the permits to construct for permit units subject to this regulation, except as Rule 1304 applies, as provided by Rule 1303(a) unless:

(1) The new source or modification complies with all applicable rules and regulations of the District; and

(2) The applicant certifies in writing, prior to the issuance of such permit, that all stationary sources owned or operated by such person (or by any entity controlling, controlled by, or under common control with such person) in the State of California are in compliance with all applicable emission limitations and standards under the Clean Air Act (42 USC 7401,

et. seq.) and all applicable emission limitations and standards which are part of the State Implementation Plan approved by the Environmental Protection Agency or on a compliance schedule approved by the appropriate federal, state or district officials.

The requirements of this subsection shall apply to stationary sources with allowable emissions of any air contaminant of 25 tons per year or more; and

(3) The new source or modification will be constructed using BACT for each affected air contaminant. In carrying out this provision, the Executive Officer shall annually publish a guideline of BACT for commonly processed permit unit categories or classes of sources. BACT for other permit unit categories or classes of sources shall be determined on a case-by-case basis; and

(4) The net increase in emissions for each affected air contaminant has been offset pursuant to Rule 1307; and

(5) The applicant has substantiated with modeling or other analysis approved by the Executive Officer that the new source or modification will not cause a violation or make measurably worse an existing violation of any national ambient air quality standard at the point of maximum ground level impact. However, modeling shall not be required if all offset sources are within a distance of eight kilometers (five miles) from the affected permit units, unless otherwise required by the Executive Officer.

The air quality methods used for the purposes of this subsection shall be from an approved list of models. Such model list shall be that prepared by the Executive Officer of the California Air Resources Board in consultation with the Executive Officer.

(6) The Executive Officer determines that the new source or modification will not result in emissions which interfere with the schedule of reasonable further progress set forth in the State Implementation Plan for the Los Angeles Air Pollution Control District, approved by the Environmental Protection Agency.

(c) The provisions of this regulation, except as provided in Rule 1304(f), shall apply to existing stationary sources relocated to non-contiguous properties, provided:

(1) The relocation distance is greater than eight kilometers (five miles) and the emissions of any non-attainment air contaminant, at the new location, are greater than 68 kilograms (150 pounds) per day, except carbon monoxide, for which the value is 340 kilograms (750 pounds) per day; or

(2) The relocation distance is less than eight kilometers (five miles) and there is a net emission increase of any non-attainment air contaminant greater than 68 kilograms (150 pounds) per day, except carbon monoxide, for which the value is an increase of 340 kilograms (750 pounds) per day.

Rule 1304. Exemptions from Regulation XIII

Upon approval by the Executive Officer, and provided BACT is employed on the subject permit units, an exemption from this regulation, for one or more non-attainment air contaminants as appropriate, shall be allowed for the permit unit or source which:

(a) Fuel Conversion

Is exclusively a modification to convert from use of gaseous fuels to liquid fuels because of a demonstrable shortage of gaseous fuels (for the purpose of this subsection, modification shall include the permit units for storing or transferring such fuel at the facility), provided:

(1) the applicant demonstrates that best efforts have been made to obtain the required emission offsets, and the applicant certifies that the required offsets will be sought until construction of the modification begins, and that all required offsets available shall be used; and

(2) the applicant agrees to conditions on the operating permit requiring conversion to gaseous or other equivalent low-polluting fuels, should they become available; or

(b) Portable Equipment

Is portable and used for not more than one 90 consecutive day period in any twelve consecutive month period within the District; or

(c) Essential Public Services

Will be used exclusively for providing essential public services; including but not limited to: schools, hospitals, or police and fire-fighting facilities; but specifically excluding sources of electrical power generation other than for emergency standby use at essential public service facilities; or

(d) Air Pollution Control Equipment

Is air pollution control equipment used solely to reduce the issuance of air contaminants from an existing stationary source, provided the applicant establishes with modeling that the affected source will not cause a new violation or make measurably worse an existing violation of any national ambient air quality standard at the point of maximum ground level impact; or

(e) Resource Conservation and Energy Projects

(1) Is a cogeneration project or other energy-related project using fossil fuels, but excluding such other energy-related projects at power plants or refineries, provided:

(A) the project produces 50 megawatts or less of electricity, and

(B) the applicant has provided all required offsets available by modifying facilities owned or operated by the applicant within the District;

(C) the applicant demonstrates to the satisfaction of the Executive Officer that the applicant owns or operates no facilities within the air basin which could be modified to provide offsets; or

(2) Is a resource recovery project using municipal waste, refuse-derived, biomass derived, or other non-fossil fuels for useful energy generation, provided:

(A) the project produces 50 megawatts or less of electricity, and

(B) the project is a modification to an existing source and

(i) the applicant has provided all required offsets available by modifying facilities owned or operated in the air basin by the applicant; or

(ii) the applicant demonstrates to the satisfaction of the Executive Officer that the applicant owns or operates no facilities within the air basin which could be modified to provide offsets; or

(C) the project is a new project, and the applicant demonstrates to the satisfaction of the Executive Officer that all available required offsets have been obtained and, if those offsets are not sufficient, that additional offsets are not available.

The Executive Officer shall notify the Executive Officer of the Air Resources Board upon receipt of an application for a permit to construct a project for which an exemption under this subsection may be appropriate; or

(f) Relocations

Is a relocation of an existing stationary source within a distance of eight kilometers (five miles) and the net increase in emissions of any air contaminant is less than 68 kilograms (150 pounds) per day, except carbon monoxide, for which the value is a net increase of 340 kilograms (750 pounds) per day; or

(g) Innovative Technology

Is innovative equipment or a process which:

(1) the applicant demonstrates will likely result in a significantly lower emission rate from the affected source than would have occurred with the use of previously recognized BACT; and

(2) can be expected to serve as a model for emission reduction technology; and

(3) the applicant establishes by modeling that the affected source will not cause the violation of, or make measurably worse an existing violation of any national ambient air quality standard at the point of maximum ground level impact. This exemption shall apply only to air contaminants which are reduced by the innovative equipment or process.

The Executive Officer shall notify the Executive Officer of the Air Resources Board this when an application is received for which such an exemption may be appropriate.

(h) Replacement is a permit unit replacing a functionally identical permit unit, provided there is no increase in maximum rating.

Rule 1305. Special Permit Provisions

(a) Modifications to Equipment Under Existing Permits.

Any person operating permit units who plans to make modifications to those permit units for the purpose of effecting emission reductions required by Rule 1307, Emission Offsets, shall submit applications for new permits to construct or operate for both the basic and control equipment involved in such emissions reductions, regardless of whether modifications or additions are to be made to the basic or control equipment, or both.

(b) Surrender of Permits.

Existing permits to operate pertaining to the basic and control equipment as specified above shall be surrendered and canceled at the time such new permits to operate are issued. Permits to operate for equipment taken out of service to effect an emission reduction under Rule 1307 shall be surrendered at the time the affected permit unit or source is issued a permit to operate.

(c) Evaluation.

In evaluating the applications submitted pursuant to this rule, the Executive Officer shall:

(1) Determine completeness of the application and inform the applicant of such pursuant to Rules 210 and 1310(a); and

(2) Evaluate only those portions of the applicant's operations which pertain to the emission reduction to be made under the provisions of this regulation. No other review or analysis shall be made for the purpose of issuing new permits pursuant to this rule; and

(3) Consider emission reductions only if before the applications are determined to be complete, rules or regulations have not been adopted which would require the same emission reductions from the same equipment type as those proposed by the applicant.

Rule 1306. Emission Calculations

This rule shall be used as the basis for calculating applicability to Regulation XIII as delineated in Rule 1303. This rule shall also be the basis for calculating emission increases and decreases used for offset calculations in Rule 1307.

(a) Accumulation of Emissions

(1) Emission increases and decreases for each air contaminant, including the emission increases or decreases directly associated with the permit units or source, shall be summed either (A) within the last five years prior to the date of submittal of application for permits to construct or (B) from October 8, 1976. Whichever time period of (A) or (B) is less will be the basis for accumulating emission increases or decreases.

In those cases where (B) is the appropriate time period for determination, emission increases of any air contaminants occurring from October 8, 1976 to date of adoption shall be forgiven up to a maximum amount of 45 kilograms (100 pounds) per day.

(2) Such sum of accumulated emissions, after proper calculations, shall be the basis for the threshold determination of Rule 1303 and for the offset requirements of Rule 1307.

(3) Emission increases or decreases occurring during the period described in subsection (a)(1) are those associated with a new or modified permit to operate or a permit to construct issued during the same period, excluding any emissions reductions required to comply with federal, state, or district laws, rules, or regulations.

(4) Emission reductions required to comply with federal, state, or District laws, rules or regulations shall be excluded from the accumulation of emissions pursuant to subsection (a)(2) of this rule; however, emission reductions in excess of those required by this regulation may be accumulated.

(5) the following mobile source emissions directly associated with a modification to an existing source or with a new source shall be accumulated:

(A) On-premise vehicles; and

(B) All emissions resulting from the loading or unloading of cargo at the source

(b) If in calculating emission increases and decreases, it is determined that violations of district, state or federal laws, rules, regulations, permit conditions, or orders would occur under the conditions specified in subsection (c), adjustments to the emissions shall be made to determine the emissions the existing source would have caused without such violations. The provisions of this subsection shall not apply to ambient air quality standards.

(c) Calculation of Emissions for Threshold Determination.

This subsection provides the method for calculating emission increases and reductions at a stationary source in order to determine if such source is subject to New Source Review as specified in Rule 1303(a).

(1) Emission increases or reductions from permit units in a stationary source shall be calculated using the permit conditions restricting the operation of the subject permit units. In those cases where there are no permit conditions, which directly limit emissions, the emission increase or reduction shall be determined as follows:

(A) For new permit units, the emission increase shall be calculated from:

(i) the maximum rated capacity; and

(ii) the maximum proposed daily hours of operation; and

(iii) the actual materials processed; or

(B) For modified permit units, the emission increase or reduction shall be the difference in emissions before and after modification, determined as follows:

(i) the emissions after modification shall be calculated from:

(a) the maximum rated capacity; and

(b) the maximum proposed daily hours of operation after modification; and

(c) the actual materials processed; and

(ii) the emissions before modification shall be calculated from the sum of actual emissions, determined from company

records or other data approved by the Executive Officer, which have occurred during the highest three years of the last five-year period, divided by the total number of actual operating days in those three years, provided the applicant demonstrates that such permit units have been operated at least 90 days during each of such three years; or

(C) For permit units removed from service, the emission reductions shall be calculated from the sum of actual emissions, determined from company records or other data approved by the Executive Officer, which have occurred during the highest three years of the last five-year period, divided by the total number of actual operating days in those three years, provided the applicant demonstrates that such permit units have been operated at least 90 days during each of such three years.

(2) In those cases where the applicant is unable to furnish use records to the satisfaction of the Executive Officer, the emissions for subsections (l)(B)(ii) and (l)(C) of this rule shall be calculated using:

(A) Fifty percent of the maximum rated capacity; and

(B) the maximum daily hours of operation; and

(C) the actual materials processed; provided the applicant demonstrates to the satisfaction of the Executive Officer that the subject permit units operated at least 90 days within each of three of the last five years.

(3) Emission reductions appropriate to the air pollution reduction equipment or process shall be used in the calculations of subsection (c)(1) and (c)(2).

(4) Emission increases and reductions from mobile and other sources shall be determined from records or other usage information approved by the Executive Officer, calculated as a daily emission, using the calculation methods of subsection (c)(1), except that light-duty motor vehicles' emissions shall be based upon the make and model year of the vehicles and 30 miles per day driven for each vehicle.

(d) Calculation of Emissions for Offset

This subsection provides the method for calculating the quantities of emissions used in the offset determination of Rule 1307.

(1) Emission increases or reductions from permit units in a stationary source shall be calculated using the permit conditions restricting the operation of the subject permit units and the total days of operation per year. In those cases where there are no permit conditions which directly limit emissions, the emission increase or reduction shall be determined as follows:

(A) For new permit units, the emission increase shall be calculated from:

(i) the maximum rated capacity; and

(ii) the maximum proposed annual hours of operation; and

(iii) the actual materials processed; or

(B) For modified permit units, the emission increase or reduction shall be the difference in emissions before and after modification determined as follows:

(i) the emissions after modification shall be calculated from:

(a) the maximum rated capacity; and

(b) the maximum proposed annual hours of operation after modification; and

(c) the actual materials processed; and

(ii) the emissions before modification shall be calculated from the sum of actual annual emissions, determined from company records or other data approved by the Executive Officer which have occurred during the highest three years of the last five-year period, divided by three, provided the applicant demonstrates that such permit units have been operated at least 90 days during each of such three years;

(C) For permit units removed from service, the emission reductions shall be calculated from the sum of actual annual emissions, determined from company records or other data approved by the Executive Officer, which have occurred during the highest three years of the last five-year period, divided by three, provided the applicant demonstrates that such permit units have been operated at least 90 days during each of such three years;

(2) In those cases where the applicant is unable to furnish use records to the satisfaction of the Executive Officer, the emissions for subsections (2)(B)(ii) and (2)(C) of this rule shall be calculated using:

(A) Fifty percent of the maximum rated capacity; and

(B) the maximum annual hours of operation; and

(C) the actual materials processed, provided the applicant demonstrates to the satisfaction of the Executive Officer that the subject permit units operated at least 90 days within each of three of the last five years.

(3) Emission reductions appropriate to the air pollution reduction equipment or process shall be used in the calculations of subsection (d)(1) and (d)(2).

(4) Emission increases and reductions from mobile and other sources shall be determined from records or other usage information approved by the Executive Officer calculated as an annual emission, using the calculation methods of subsection (d)(1), except that light-duty motor vehicles' emissions shall be based upon the make and model year of the vehicles and 11,000 miles per year driven for each vehicle.

(5) Notwithstanding Rule 1307, the offset factor for mobile source emission reductions shall be 2.0.

Rule 1307. Emission Offsets

(a) Offset Calculation

Affected sources shall offset emission increases of non-attainment air contaminant greater than 68 kilograms (150 pounds) per day, except carbon monoxide, for which the value is an increase greater than 340 kilograms (750 pounds) per day, as determined pursuant to Rule 1306, times the offset factor determined as follows:

Offset factor = 1.2 + b(x).

where: x = the distance in kilometers between the affected source permit unit and the offset source permit unit;

b = 0; when x is less than eight kilometers (five miles);

b = 0.01; when x is equal to or greater than eight kilometers (five miles);

(b) Seasonal Sources

In addition to the requirements of section (a) above, seasonal emissions used for offset shall generally occur during the same five consecutive month period as the new source or modification operates. Seasonal offset sources shall not offset any other affected source other than a seasonal source.

(c) Intermittent Sources

In addition to the requirements of section (a) above, for affected intermittent sources and intermittent offset sources, the emission increases and reductions shall be shown on annual emission profiles. Separate profiles for the affected and offset source shall be constructed by plotting on the same graph the absolute value of the source emissions and offset reductions in order of descending magnitude. The abscissa shall show the number of days in the year and the ordinate shall show the source emissions and offset reductions. Separate profiles shall be constructed for each affected air contaminant. The offset profile shall at no point fall below the profile of the affected intermittent source. Intermittent offset sources shall not offset any affected source other than an intermittent source.

Rule 1308. Eligibility of Emission Offsets

(a) Source Eligibility

All offset sources and offset emissions shall be subject to the aproval of the Executive Officer. In determining the eligibility of emission offsets pursuant to this regulation, the Executive Officer shall consider reductions of the same air contaminant as the result of:

(1) For stationary sources, the additional control of air contaminants from or removal from service of:

(A) Existing permit units, provided that in accordance with Rule 1305, new applications for permits to construct and operate are submitted for modified permit units or are surrendered for permit units taken out of service; or

(B) Existing exempt permit units, excluding equipment used in conjunction with any structure designed and used exclusively as a dwelling and excluding mobile sources. If modified or controlled in order to be used as an offset source, such equipment shall lose its exempt status and such permit unit will be subject to the requirements of Rule 203; or

(2) For mobile source emission reductions, provided the applicant demonstrates sufficient control over the mobile sources to assure the claimed reductions are realized, and provided the emission reductions are the result of:

(A) substitution and usage of high occupancy vehicles for low occupancy vehicles; or

(B) installation of additional emission control devices not otherwise required by federal or California law; or

(C) any other means, upon prior written approval of the Executive Officer; or

(3) Emission reductions which result from energy conservation projects; or

(4) Emission reductions by any other means, upon prior written approval of the Executive Officer.

(b) Offset Eligibility Requirements

The Executive Officer shall disallow an emission offset unless:

(1) the Executive Officer determines the offset is enforceable; and

(2) the affected source applicant demonstrates the degree of emission reduction.

(3) in cases where the offset permit units are located more than 24 kilometers (15 miles) in the prevailing downwind direction from the affected source permit units, the applicant demonstrates, through modeling, to the satisfaction of the Executive Officer that the offsets will result in a net air quality benefit in the area impacted by the affected source.

For the purpose of this subsection, the prevailing downwind direction shall be determined by the Executive Officer on the basis of meteorological records.

(c) Changes in Operating Hours

For the purpose of this rule, reductions in emissions due to changes in the hours of operation shall not qualify as an offset.

(d) Interpollutant Offsets

For the purpose of offsetting increases in particulate emissions, the Executive Officer may allow offsets of reactive hydrocarbons, SO_2, or NO_x, provided the applicant demonstrates to the satisfaction of the Executive Officer that required particulate emission offsets are not available. The ratio of emission reductions between hydrocarbons, SO_2, or NO_x and particulate matter shall be determined by the Executive Officer from a list prepared by the Executive Officer of the Air Resources Board in consultation with the Executive Officer.

(e) Emission reductions of methane, 1, 1, 1-trichloroethane, methylene chloride, or trichlorotrifluoroethane shall not qualify as offsets for increases in emissions of reactive hydrocarbons.

(f) Notwithstanding the provisions of this regulation, the Executive Officer shall deny the permits to construct for permit units which result in a net emission increase from a stationary source of any combination of 1, 1, 1-trichloroethane, methylene chloride, or trichlorotrifluoroethane totaling 68 kilograms (150 pounds) per day or more, unless:

Rule 1309. Banking

Reserved.

Rule 1310. Analysis, Notice, and Reporting

(a) Completeness of Application

The Executive Officer shall determine whether the application is complete not later than 30 calendar days after receipt of the application, or after such longer time as both the applicant and the Executive Officer may agree. Such determination shall be transmitted in writing immediately to the applicant at the address indicated on the application. If the application is determined to be incomplete, the determination shall specify which parts of the application are incomplete and how they can be made complete. Upon receipt by the Executive Officer of any resubmittal of the application, a new 30-day period in which the Executive Officer must determine completeness, shall begin. Completeness of an application or resubmitted application shall be evaluated on the basis of the guideline for such, published by the Executive Officer.

After acceptance of an application as complete, the Executive Officer shall not subsequently request of an applicant any new or additional information which was not specified in the Executive Officer's list of items to be included within such applications. However, the Executive Officer may, during the processing of the application, request an applicant to clarify, amplify, correct, or otherwise supplement the information required in such list in effect at the time the complete application was received. Making any such request does not waive, extend, or delay the time limits in this rule for decision on the completed application, except as the applicant and Executive Officer may both agree.

(b) Requirements for Public Notice

For those sources subject to this regulation or exempt pursuant to Rule 1304(a), (c), (d), (e), or (g), following acceptance of an application as complete, the Executive Officer shall:

(1) Perform the evaluations required to determine compliance with this regulation and make a preliminary written decision as to whether a permit to construct should be approved, conditionally approved, or disapproved, or exempt. The decision shall be supported by a succinct written analysis; and

(2) Within ten calendar days following such decision, publish a notice by prominent advertisement in at least one newspaper of general circulation in the District stating the preliminary decision of the Executive Officer and where the public may inspect the information required to be made available under subsection (b)(3). The notice shall provide 30 days from the date of publication for the public to submit written comments on the preliminary decision; and

(3) At the time notice of the preliminary decision is published, make available for public inspection at the District office the information submitted by the applicant, the supporting analysis for the preliminary decision, and the preliminary decision to grant or deny the permit to construct, including any proposed permit conditions, and the reasons therefor. The confidentiality of trade secrets shall be considered in accordance with Section 6254.7 of the Government Code; and

(4) No later than the date of publication of the notice required by subsection (b)(2), forward the analysis, the preliminary decision, and copies of the notice to the Air Resources Board (attention: Chief, Stationary Source Control Division) and the Regional Office of the United States Environmental Protection Agency; and

(c) Comments

The Executive Officer shall consider all written comments submitted during the 30-day public comment period; and

(d) Final Action

Within 180 days after acceptance of the application as complete, the Executive Officer shall take final action on the application after considering all written comments. The Executive Officer shall provide written notice of the final action to the applicant, the Environmental Protection Agency, and the California Air Resources Board, shall publish such notice in a newspaper of general circulation, and shall make the notice and all supporting documents available for public inspection at the District office.

Rule 1311. Power Plants

This section shall apply to all power plants proposed to be constructed in the District and for which a Notice of Intention (NOI) or Application for Certification (AFC) has been accepted by the California Energy Commisssion (Commission).

(a) Intent to Participate and Preliminary Report

Within fourteen days of receipt of an NOI, the Executive Officer shall notify the California Air Resources Board and the Commission of the District's intent to participate in the NOI proceeding. If the District chooses to participate in the NOI proceeding, the Executive Officer shall prepare and submit a report to the California Air Resources Board and the Commission prior to the conclusion of the nonadjudicatory hearings specified in Section 25509.5 of the Public Resources Code. That report shall include, at a minimum:

(1) a preliminary specific definition or description of BACT for the proposed facility; and

(2) a preliminary discussion of whether there is substantial likelihood that the requirements of this regulation and all other District regulations can be satisfied by the proposed facility; and

(3) a preliminary list of conditions which the proposed facility must meet in order to comply with this regulation or any other applicable District regulation. The preliminary determinations contained in the report shall be as specific as possible within the constraints of the information contained in the NOI.

(b) Determination of Compliance Review

Upon receipt of an AFC for a power plant, the Executive Officer shall conduct a Determination of Compliance review. This Determination shall consist of a review identical to that which would be performed if an application for a permit to construct had been received for the power plant. If the information contained in the AFC does not meet the requirements which would otherwise comprise a complete permit to construct application pursuant to these regulations, the Executive Officer shall, within 20 calendar days of receipt of the AFC, so inform the Commission, and the AFC shall be considered incomplete and returned to the applicant for resubmittal.

(c) Application for Permit to Construct

The Executive Officer shall consider the AFC to be equivalent to an application for a permit to construct during the Determination of Compliance review, and shall apply all provisions of these regulations which apply to applications for a permit to construct.

(d) Additional Information

The Executive Officer may request from the applicant any information necessary for the completion of the Determination of Compliance review. If the Executive Officer is unable to obtain the information, the Executive Officer may petition the presiding Commissioner for an order directing the applicant to supply such information.

(e) Preliminary Decision

Within 180 days of accepting an AFC as complete, the Executive Officer shall make a preliminary decision on:

(1) whether the proposed power plant meets the requirements of this regulation and all other applicable District rules and regulations ~~at the time the facility is to commence operations~~; and

(2) in the event of compliance, what permit conditions will be required, including the specific BACT requirements and ~~those conditions necessary to ensure that the facility will comply with all applicable rules and regulations in the assumptions or predictions used in subsection (e)(1) are not accurate~~ and a description of required mitigation measures.

(f) Preliminary Decision Public Notice Requirements

The preliminary written decision made under subsection (e) shall be treated as a preliminary decision under Rule 1310(b)(1) and shall be finalized by the Executive Officer only after being subject to the public notice and comment requirements of Rule 1310.

(g) Determination of Compliance

Within 240 days of the filing date, the Executive Officer shall issue and submit to the commission a Determination of Compliance or, if such a determination cannot be issued, shall so inform the Commission. A Determination of Compliance shall confer the same rights and privileges as a permit to construct only when and if the Commission approves the AFC, and the Commission certificate includes all conditions of the Determination of Compliance.

Rule 1312. Alternative Siting

Reserved.

Rule 1313. Permits to Operate

(a) Analysis

The Executive Officer shall analyze the effects on air quality of sources subject to this regulation as determined in Rule 1303(a) and shall deny the permit to operate unless:

(1) the owner or operator of the source has submitted a completed application for permit to construct. Such application is deemed complete upon receipt by the applicant of the notice from the Executive Officer pursuant to Rule 1310; and

(2) it is determined that the new source or modification, and any sources which provide offsets, have been taken out of service or constructed, are operated in a manner consistent with the conditions of the permit to construct; and

(3) it is determined that any offsets required as a condition of the permit to construct will commence at the time of or prior to initial operations of the new source or modification. For a new source or modification which will be a replacement, in whole or part, for an existing source on the same or contiguous property, a maximum of 90 days may be allowed as a start-up period for simultaneous operation of the subject sources; and

(4) it is determined that all conditions specified in the permit to construct have been or will be complied with by any dates specified in such permits.

(b) Permit Conditions

The Executive Officer shall require as a condition for the issuance of any permit to operate for a new or modified source, that the source and any offset source be operated consistent with any conditions imposed on their respective permits to construct.

(c) Change of Ownership

The Executive Officer shall exempt from the provisions of this rule any stationary source which is a continuing operation, without modification or change in operating conditions, when a permit to operate is required solely because of permit renewal or change in ownership.

(d) No Permit to Construct Issued

For new or modified permit units or sources which are constructed without the required permit to construct, the application for permit to operate shall, for the purposes of this regulation, be considered an application for permit to construct. The Executive Officer shall deny the permit to operate unless the new source or modification complies with all rules in this regulation whether the rules pertain to a permit to construct or permit to operate.

State of California

Memorandum

To : Huey D. Johnson
Secretary
Resources Agency

Date : August 11, 1980

Subject : Filing of Notice of Decision of the Air Resources Board

From : Air Resources Board

Pursuant to Title 17, Section 60007(b), and in compliance with Air Resources Board certification under section 21080.5 of the Public Resources Code, the Air Resources Board hereby forwards for posting the attached notice of decision and response to environmental comments raised during the comment period.

Sally Rump

Sally Rump
Board Secretary

attachments
Resolution 80-38
[redacted]

RECEIVED BY
Office of the Secretary
AUG 12 1980
Resources Agency of California

State of California
AIR RESOURCES BOARD

Resolution 80-49

July 23, 1980

WHEREAS, Section 39602 of the Health and Safety Code designates the Air Resources Board (ARB) as the air pollution control agency for all purposes set forth in federal law and designates the ARB as the state agency responsible for the preparation of the State Implementation Plan (SIP) required by the Clean Air Act;

WHEREAS, the Clean Air Act as amended in 1977 mandates the revision of the SIP in designated nonattainment areas of the state in order to assure the attainment and maintenance of national ambient air quality standards by specified deadlines;

WHEREAS, Health and Safety Code Sections 41500, 41504, 41650 and 41652 provide that the ARB shall adopt a locally prepared nonattainment plan and authorize the ARB to make such revisions to a nonattainment plan as are necessary to meet the requirements of the Clean Air Act;

WHEREAS, the ARB is the designated lead agency for the Los Angeles County nonattainment plan and has committed itself to a coordinated program for the development of the nonattainment plans for ozone with the active participation of other agencies possessing resources and expertise in the air quality and transportation fields;

WHEREAS, the California Environmental Quality Act and ARB implementing regulations require that an activity not be adopted if feasible alternatives and/or feasible mitigation measures are available which would significantly lessen any negative environmental impacts of the proposed activity;

WHEREAS, on November 29, 1979, the ARB resolved in Resolution 79-79, incorporated by reference herein, that the Los Angeles County APCD's nonattainment plan did not include New Source Review rules which would achieve and maintain state and national ambient air quality standards and do not meet the requirements of the federal Clean Air Act;

WHEREAS, on July 17, 1980, the Los Angeles County APCD Board adopted Regulation XIII, New Source Review, which among other provisions amended Sections (a)(2) and (3) and (e)(1) and (2) of Rule 1311, Power Plants, to purportedly facilitate the issuance of permits for the construction of power plants which would not require mitigation of potential adverse impacts.

RECEIVED BY
Office of the Secretary

AUG 12 1980

Resources Agency of California

State of California

AIR RESOURCES BOARD

Response to Significant Environmental Issues

Item: Public Hearing to Consider Amending the Rules and Regulations of Imperial County Air Pollution Control District, Los Angeles County Air Pollution Control District and San Bernardino County Air Pollution Control District

Public Hearing Date: July 23, 1980

Response Date: July 23, 1980

Issuing Authority: Air Resources Board

Issue: No adverse environmental impacts identified in staff report or in public testimony.

Response: N/A

CERTIFIED: Sally Rump

Date:

RECEIVED BY
Office of the Secretary
AUG 12 1980
Resources Agency of California

State of California
AIR RESOURCES BOARD

OPPOSING CONSIDERATIONS AND AGENCY RESPONSE

July 23, 1980

Public Hearing to Consider Amending the Rules and Regulations
of Imperial County Air Pollution Control District,
Los Angeles County Air Pollution Control District and
San Bernardino County Air Pollution Control District

1. Opposing Consideration: The Los Angeles County Air Pollution Control District adopted amendments to Rule 1311 of Regulation XIII, referring to Power Plants, to purportedly allow a power plant with a projected date of operation subsequent to December 31, 1987 to be exempt from the emission offset requirements of the regulation. The rationale is that by that date the area will be attaining the ambient air quality standards for ozone, since the Clean Air Act requires the SIP to so provide, thus obviating the necessity to provide offsets. ("Offsets" provide a mechanism whereby a major source can locate in a polluted area by assuring a net air quality benefit as a result of reducing emissions from other sources in the impacted area).

Response: The adopted language in Rule 1311 is unclear and imprecise and as a regulatory measure is meaningless. As such, it changes the complexion of the previous language in Sections (a)(2) and (3) and (e)(1) and (2) of the rule, alters and confuses its applicability and intent, and should be deleted. While the Clean Air Act, the EPA Emission Offset Interpretive Ruling (40 CFR Part 51, Appendix S), and EPA's proposed rule amending the Interpretive Ruling in response to the ruling of the U.S. Supreme Court in Alabama Power Co. vs. Costle, 13 ERC 1225 (1979) allow the determination of whether a source would cause or contribute to exceedances of a NAAQS to be made as of the new source's start-up date, certain conditions must be met before such source can be exempt from providing offsets when obtaining a permit to construct.

The purpose of the conditions is to assure that exemptions from offset requirements will be permitted only if it is certain that the area where the source is to locate will be an attainment area by the start-up date. Even if the language adopted by the District clearly set forth what it is intended to accomplish, which it certainly does not do, provision of such an exemption would be impermissible in this region becuase the conditions are not met.

It is initially assumed in reviewing a permit application that every location within a designated nonattainment area will exceed the NAAQS as of the source start-up date and that any major source would significantly contribute to a violation, thus requiring offsets. If the applicant presents a "substantial and relevant argument," including necessary analysis and documentation to prove that this assumption is incorrect, the applicability of the Interpretive Ruling and any state SIP offset requirement would be determined by the specific facts of the case. The amended language does not reflect this.

Further, the source must be located in an area which is projected to be an attainment area as part of an approved SIP control strategy by the source's start-up date. The plan must show attainment by the deadline specified in Clean Air Act Section 172 based exclusively on currently adopted, approved, and enforceable requirements. Plans where approval under Part D is conditioned on submittal of additional material, plans containing schedules for submittal of additional material rather than enforceable regulatory measures, and plans where additional submittals are needed by July 1, 1982 in order to demonstrate attainment by 1987 do not fulfill this requirement. This is because such plans do not definitely provide for attainment by the source's start-up date. In these cases, attainment is more of a goal than a probability, and is based on the adoption and implementation of measures not yet developed. Attainment is also based on other variables such as source compliance with adopted measures as opposed to extensive litigation and recalcitrance.

The present exemption of many major sources from offset requirements would cause difficulties even if the area were to attain the standards by 1987, because it would be impossible to calculate how many and which new sources could operate and contribute new pollutants without the area again exceeding standards. The time and resources necessary for obtaining acceptable offsets logically require that they be obtained under enforceable contractual arrangement early in the process, before construction commences. This will obviate any vested rights problems which could arise at the operation stage and will avoid last-minute

scrambling for offsets.

Only where attainment of the NAAQS is a certainty does the law allow these considerations to be overridden by an exemption. Under the circumstances, the adopted provisions do not meet the requirements of the Clean Air Act and must be deleted and the original language and meaning restored.

2. Opposing Consideration: The representative from Southern California Edison Company stated the opinion that when a project like a power plant applies for an AFC, the lead time to commencing operation can be 10 years. It is their opinion therefore that applying present day regulations to a project which will not "start-up" for another 10 years is not practical or justifiable. It is their contention that the Clean Air Act allows considering future air quality to determine conditions of the permit to construct. Therefore, they would support not amending the language adopted by the Los Angeles County APCD Board concerning power plants in Rule 1311 -Power Plants.

Response - See response given in number 1 for the action taken by the Los Angeles County APCD.

3. Opposing Consideration: The Western Oil and Gas Association written testimony states that there is no authority under either California law or the Clean Air Act which requires that the Executive Officer of the Air Resources Board have concurrent authority with the district Executive Officer for determining BACT, appropriate air quality models, and exemptions for innovative technology. Inclusion of such provisions into the San Bernardino

County and Los Angeles County APCD's new source review regulations represents an unwarranted interference with local permitting processes.

Response: The Air Resource Board will not be adopting the language objected to by the WOGA.

4. Opposing Consideration: In addition, WOGA's testimony contends that the EPA's criteria for approval only requires adoption of new source review rules such as the staff proposed rule, for nonattainment areas. (PSD rules govern new major sources in attainment areas.) Therefore, the rules adopted need not apply to all new and modified sources in both attainment and nonattainment areas. (note SCAQMD Reg. XIII, New Source Review addresses nonattainment pollutants only)

Response: The Air Resources Board will not be adopting the language objected to by the WOGA.

5. Opposing Consideration: The Union Pacific Railroad Company representative objected to the inclusion of cargo carrier emissions emitted while operating within the air basin which is specified in the San Bernardino Regulation XIII.

Response: The Air Resource Board will not be adopting the language objected to by the Union Pacific Railroad Company. The San Bernardino County APCD Board adopted Regulation XIII, New Source Review, for themselves.

State of California
AIR RESOURCES BOARD

Resolution 80-50

August 28, 1980

WHEREAS, the Air Resources Board has been directed to carry out an effective research program in conjunction with its efforts to combat air pollution, pursuant to Health and Safety Code Sections 39700 through 39705;

WHEREAS, an unsolicited research Proposal Number 934-78 entitled "Investigation of the Role of Natural Hydrocarbons in Photochemical Smog Formation in California" has been submitted by the University of California at Riverside to the Air Resources Board; and

WHEREAS, the Research staff has reviewed and recommended this proposal for approval; and

WHEREAS, the Research Screening Committee has reviewed and recommends for funding:

> Proposal Number 934-78 entitled "Investigation of the Role of Natural Hydrocarbons in Photochemical Smog Formation in California" submitted by the University of California at Riverside for an amount not to exceed $137,964;

NOW, THEREFORE, BE IT RESOLVED, that the Air Resources Board pursuant to the authority granted by Health and Safety Code Section 39703, hereby accepts the recommendation of the Research Screening Committee and approves the following:

> Proposal Number 934-78 entitled "Investigation of the Role of Natural Hydrocarbons in Photochemical Smog Formation in California" submitted by the University of California at Riverside for an amount not to exceed $137,964,

BE IT FURTHER RESOLVED, that the Executive Officer shall initiate administrative procedures and execute all necessary documents and contracts for the research effort proposed in an amount not to exceed $137,964.

I certify that the above is a true and correct copy of Resolution 80-50 as passed by the Air Resources Board.

Sally Rump

Sally Rump
Board Secretary

State of California
AIR RESOURCES BOARD

ITEM NO: 80-14-4(b-1)
DATE: August 28, 1980

ITEM: Research Proposal No. 934-78 entitled "Investigation of the Role of Natural Hydrocarbons in Photochemical Smog Formation in California," University of California, Riverside, Arthur M. Winer.

RECOMMENDATION: Adopt Resolution 80-50 approving Research Proposal No. 934-78 for funding in an amount not to exceed $137,964.

SUMMARY:

Recent reports in the literature have advanced the hypothesis that a significant relationship exists between enhanced emissions attributable to biomass increases resulting from wet winters and abnormally high ozone levels during the following summers. Naturally-occurring hydrocarbons volatilized from supposedly increased biomass were suggested as the primary factor responsible for the observed increase in days with ozone concentrations exceeding the federal air quality standard.

One of the weakest links in the biomass hydrocarbon-ozone hypothesis is that no evidence is available to show whether reactive hydrocarbons of biogenic origin are actually accumulating to a concentration sufficiently high to significantly affect ambient ozone levels in locations such as the South Coast and Bay Area Air Basins. While a substantial amount of data gathered under ambient conditions suggests that bio-mass hydrocarbons do not accumulate to concentrations that would have a significant effect on ozone production, such conclusions have been challenged in the published literature and the issue remains unresolved.

This proposal is the second part of a two-year effort to investigate the role of natural hydrocarbons in ozone. During the first year of this study, the investigators have developed the equipment and methodology to identify and measure natural hydrocarbons in the ambient air, for measuring emission rates for vegetative communities, and for making smog chamber studies of precursor oxidant relationships in the South Coast Air Basin. In the proposed program the investigators will use these methodologies and equipment to (1) measure

rates of emission of representative plant species; (2) measure ambient concentrations of natural hydrocarbons in "source" areas in the South Coast Air Basin; and (3) determine the impact of natural hydrocarbons on smog formation.

The staff and the Research Screening Committee believe that the question concerning the importance of natural hydrocarbons as a significant precursor for photochemical smog remains largely unanswered and that sound experimental evidence is needed to permit a final scientific judgment on this issue.

State of California
AIR RESOURCES BOARD

Resolution 80-51

August 28, 1980

WHEREAS, the Air Resources Board has been directed to carry out an effective research program in conjunction with its efforts to combat air pollution, pursuant to Health and Safety Code Sections 39700 through 39705;

WHEREAS, an unsolicited research Proposal Number 935-78 entitled "Effects of Ozone and Sulfur Dioxide on Forage and Range Species: 1. On Growth and Partioning; 2. Under Simulated Grazing (Defoliation)", has been submitted by the University of California at Riverside, to the Air Resources Board; and

WHEREAS, the Research staff has reviewed and recommended this proposal for funding:

WHEREAS, the Research Screening Committee has reviewed and recommends for funding:

> Proposal Number 935-78 entitled "Effects of Ozone and Sulfur Dioxide on Forage and Range Species: 1. On Growth and Partioning; 2. Under Simulated Grazing (Defoliation)", submitted by the University of California at Riverside, for an amount not to exceed $125,000;

NOW, THEREFORE, BE IT RESOLVED, that the Air Resources Board pursuant to the authority granted by Health and Safety Code Section 39703, hereby accepts the recommendation of the Research Screening Committee and approves the following:

> Proposal Number 935-78 entitled "Effects of Ozone and Sulfur Dioxide on Forage and Range Species: 1. On Growth and Partioning; 2. Under Simulated Grazing (Defoliation)", submitted by the University of California at Riverside for an amount not to exceed $125,000.

BE IT FURTHER RESOLVED, that the Executive Officer shall initiate administrative procedures and execute all necessary documents and contracts for the research effort proposed in an amount not to exceed $125,000.

I certify that the above is a true and correct copy of Resolution 80-51 as passed by the Air Resources Board.

Sally Rump

Sally Rump
Board Secretary

State of California
AIR RESOURCES BOARD

ITEM NO: 80-14-4(b-2)
DATE: August 28, 1980

ITEM: Research Proposal No. 935-78 entitled "Effects of Ozone and Sulfur Dioxide on Forage and Range Species: 1. On Growth and Partitioning; 2. Under Simulated Grazing (Defoliation)", University of California at Riverside, Victor Youngner

RECOMMENDATION: Adopt Resolution No. 80-51 approving Research Proposal No. 935-78 for funding for an amount not to exceed $125,000.

SUMMARY:

The current state of understanding on how air pollution affects vegetation has been derived from numerous studies done on common crop or tree species. Few efforts have been expended in looking at natural or grassland vegetation. The monetary value of these uncultivated species has not been as obvious as with cultivated species, but their productivity is very important to the livestock industry, to wildlife and for the preservation of watersheds. The results of the few studies done to date on grasslands materials have shown various effects. Such factors as gradual changes in species distribution, decreased grazing capacity, protein content reductions and decreased number of tillers have been reported, sometimes after very low level exposures.

The proposal is made up of two projects that will employ different exposure facilities, plant species and exposure protocols, and study somewhat different end points.

Project 1: In this study, two important California forage grasses will be exposed to ozone and/or SO_2, each at 0.2 ppm. The exposure protocol will consist of fumigating plants 6 hours/day, 5 days/week for 15 or 26 weeks depending on the grass.

Plants will be removed at intervals for analysis of important morphological and nutritional factors.

Project 2: Two separate fumigation protocols would be employed in this project. Fumigation I would employ SO_2 at 0, 0.1 and 0.2 ppm over a 6 hour/day, 5 days/week, four month period. Each exposure level would be replicated in three chambers. Fumigation II would expose plants to the same levels of O_3 as used for SO_2 over the same time scale. Half of the plants in each group would be clipped to simulate grazing at four week intervals. The other plants will be clipped only in the later part of the season. Plants will be removed at intervals for analysis of nutrient content and morphological effects.

State of California

AIR RESOURCES BOARD

Resolution No. 80-52

August 28, 1980

WHEREAS, a proposal to augment Contract Number A8-126-31, entitled, "Emission Characteristics of Cooling Towers Using Reclaimed Waste-Water in California", has been submitted by Science Applications Incorporated, to the Air Resources Board; and

WHEREAS, the Research staff has reviewed and recommended this proposal for approval; and

WHEREAS, the Research Screening Committee has reviewed and recommends for funding:

> An Augmentation to Contract Number A8-126-31, entitled "Emission Characteristics of Cooling Towers Using Reclaimed Waste-Water in California", submitted by Science Applications Incorporated, for an amount not to exceed $12,645;

NOW, THEREFORE, BE IT RESOLVED, that the Air Resources Board pursuant to the authority granted by Health and Safety Code Section 39703, hereby accepts the recommendation of the Research Screening Committee and approves the following:

> An Augmentation to Contract Number A8-126-31, entitled "Emission Characteristics of Cooling Towers Using Reclaimed Waste-Water in California", submitted by Science Applications Incorporated, for an amount not to exceed $12,645

BE IT FURTHER RESOLVED, that the Executive Officer shall initiate administrative procedures and execute all necessary documents and contracts for the research effort proposed in an amount not to exceed $12,645.

I certify that the above is a true and correct copy of Resolution 80-52 as passed by the Air Resources Board.

Sally Rump

Sally Rump
Board Secretary

State of California
AIR RESOURCES BOARD

ITEM NO: 80-14-4(b-3)
DATE: August 28, 1980

ITEM: Proposal to augment Contract Number A8-126-31 entitled "Emission Characteristics of Cooling Towers Using Reclaimed Waste-Water in California", Science Applications Incorporated, Michael Rogozan

RECOMMENDATION: Adopt Resolution No. 80-52 approving Proposed Augmentation of Contract A8-126-31 for an amount not to exceed $12,645.

SUMMARY:

This proposal is a request for augmentation of an on-going study of the emissions from cooling towers that employ reclaimed waste water as their working medium. The original SAI project was co-funded by ARB and the California Energy Commission and is well under way. Most towers selected for study have been sampled once to test basin and tower sites for their numerous organic, inorganic and biologic content. The Energy Commission, through ARB, has funded UCD in a separate contract to extend efforts of this project to look more closely at viral and bacterial content of the tower water and spray drift.

Several potentially important additional areas of work have emerged after analysis of samples obtained thus far and after discussions among the contractor, UCD, Energy Commission and ARB staff. The addition of these tasks to the original scope of work for this project would allow important improvements to be made at modest expense. Most of the changes could not have been foreseen at the start of the project.

The contractor will make one more complete sampling trip to each designated tower to collect both tower water and drift samples. If approved, all changes could be applied to applicable sites.

Briefly, the added efforts include: 1) additional bacterial sampling, 2) chlorine measurement, 3) efforts required to determine Legionnaires' Disease presence or absence, 4) Detailed analysis of organics from an oil refinery using waste water, 5) analysis of the metal content of the particulate fraction of water samples.

RECEIVED BY
Office ... ary
OCT 0 6 1980
Resources Agency of California

State of California
AIR RESOURCES BOARD

Resolution 80-53

August 28, 1980

WHEREAS, Section 39601 of the Health and Safety Code authorizes the Air Resources Board to adopt standards, rules, and regulations necessary for the proper execution of the powers and duties granted to and imposed upon the Board by law; and

WHEREAS, Section 43000(e) of the Health and Safety Code states that emission standards applied to new motor vehicles are standards with which all new motor vehicles shall comply; and

WHEREAS, Sections 43101 and 43104 of the Health and Safety Code authorize the Board to adopt vehicle emission standards and test procedures in order to control or eliminate air pollution caused by motor vehicles; and

WHEREAS, manufacturers of diesel-fueled passenger cars have petitioned the Board to consider amending the 100,000 mile 1.0 gram per mile oxides of nitrogen (NOx) standard for 1982 based upon their asserted lack of technological capability to meet the standard; and

WHEREAS, the Board finds that the strictest control of NOx emissions that is technologically feasible is necessary to protect public health and to achieve state and federal ambient air quality standards; and

WHEREAS, the Board finds that there are technological problems associated with diesel passenger cars meeting a NOx standard of 1.0 gram per mile in model year 1982, which problems are different for naturally aspirated and turbocharged diesel passenger cars; and

WHEREAS, the Board finds that in model year 1982, a NOx emission standard of 1.2 grams per mile for a useful vehicle life of 50,000 miles is technologically feasible for naturally aspirated diesel passenger cars, and a NOx standard of 1.5 grams per mile for a useful vehicle life of 100,000 miles is technologically feasible for turbocharged diesel passenger cars; and

WHEREAS, the Board confirms its previous finding that in model year 1983, a NOx emission standard of 1.0 gram per mile for a useful vehicle life of 100,000 miles is technologically feasible for all light-duty diesel vehicles; and

WHEREAS, the California Environmental Quality Act and Board regulations require that no project having adverse environmental impacts be adopted as originally proposed if feasible alternatives or mitigation measures are available; and

WHEREAS, the Board finds that an available measure to mitigate the air quality impacts of adopting NOx standards listed above is to eliminate the current hydrocarbon correction factor found in 13 California Administrative Code Section 1960.1(a); and

WHEREAS, a public hearing and other administrative proceedings have been held in accordance with the provisions of the Administrative Procedure Act dealing with the agency adoption of emergency regulations;

NOW, THEREFORE, BE IT RESOLVED, that the Board hereby amends Section 1960.1, Title 13, California Administrative Code, as set forth in Attachment A hereto.

BE IT FURTHER RESOLVED, that the Board hereby amends the "California Exhaust Emission Standards and Test Procedures for 1981 and Subsequent Model Passenger Cars, Light-Duty Trucks and Medium-Duty Vehicles" as set forth in Attachment B hereto.

BE IT FURTHER RESOLVED, that the Board hereby determines that the exhaust emission standards and test procedures adopted herein are, considered together with other vehicle emissions standards and test procedures found in Title 13 and adopted by the Board in Resolution 80-56, in the aggregate, at least as protective of public health and welfare as applicable federal standards.

I certify that the above is a true
and correct copy of Resolution 80-53
as adopted by the Air Resources Board.

Sally Rump

Board Secretary

EXHAUST EMISSION STANDARDS
(grams per mile)

Model-Year	Vehicle Type (1)	Equivalent Inertia Weight (lbs.) (2)	Non-Methane Hydrocarbons(3)	Carbon Monoxide	Oxides of Nitrogen (NO_2) (5)
1981	PC	All	(0.41)	3.4	1.0
	PC(4)	All	0.39 (0.41)	7.0	0.7
	LDT,MDV	0-3999	0.39 (0.41)	9.0	1.0
	LDT,MDV	4000-5999	0.50 (0.50)	9.0	1.5
	MDV	6000 & larger	0.60 (0.60)	9.0	2.0
1982	PC	All	0.39 (0.41)	7.0	0.4
	PC(4)	All	0.39 (0.41)	7.0	0.7
	PC(7)	All	0.39 (0.41)	7.0	1.2
	LDT,MDV	0-3999	0.39 (0.41)	9.0	1.0
	LDT,MDV	4000-5999	0.50 (0.50)	9.0	1.5
	MDV	6000 & larger	0.60 (0.60)	9.0	2.0
1983 & Subsequent	PC	All	0.39 (0.41)	7.0	0.4
	LDT,MDV	0-3999	0.39 (0.41)	9.0	0.4
	LDT,MDV	4000-5999	0.50 (0.50)	9.0	1.0
	MDV	6000 & larger	0.60 (0.60)	9.0	1.5

100,000 MILE EXHAUST EMISSION STANDARDS
(grams per mile)

Model-Year	Vehicle Type (1)	Equivalent Inertia Weight (lbs.) (2)	Non-Methane Hydrocarbons(3)~~(6)~~	Carbon Monoxide	Oxides of Nitrogen (NO_2) (5)
1981	PC (Option 1)	All	0.39 (6)	3.4	1.5
	PC (Option 2)	All	0.46 (6)	4.0	1.5
	LDT,MDV (Option 1)	0-3999	0.39 (0.41) (6)	9.0	1.5
	LDT,MDV (Option 2)	0-3999	0.46 (6)	10.6	1.5
	LDT,MDV	4000-5999	0.50 (0.50) (6)	9.0	2.0
	MDV	6000 & larger	0.60 (0.60) (6)	9.0	2.3
1982	PC (Option 1)	All	(0.41)	7.0	1.0 (8)
	PC (Option 2)	All	0.46	8.3	1.0 (8)
	LDT, MDV (Option 1)	0-3999	0.39 (0.41)	9.0	1.5
	LDT, MDV (Option 2)	0-3999	0.46	10.6	1.5
	LDT,MDV	4000-5999	0.50 (0.50)	9.0	2.0
	MDV	6000 & larger	0.60 (0.60)	9.0	2.3
1983 & Subsequent	PC	All	0.39 (0.41)	7.0	1.0
	PC	All	0.46	8.3	1.0
	LDT,MDV (Option 1)	0-3999	0.39 (0.41)	9.0	1.0
	LDT,MDV (Option 2)	0-3999	0.46	10.6	1.0
	LDT,MDV	4000-5999	0.50 (0.50)	9.0	1.5
	MDV	6000 & larger	0.60 (0.60)	9.0	2.0

(1) "PC" means passenger cars.
"LDT" means light-duty trucks.
"MDV" means medium-duty vehicles.
(2) Equivalent inertia weights are determined under subparagraph 40 CFR 86.129-79(a).
(3) Hydrocarbon standards in parentheses apply to total hydrocarbons.
(4) The second set of passenger car standards is optional. A manufacturer must select either the primary or optional sets of standards for its full product line for the entire two-year period.
(5) The maximum projected emissions of oxides of nitrogen measured on the federal Highway Fuel Economy Test (HWFET; 40 CFR Part 600, Subpart B) shall be not greater than 1.33 times the applicable passenger car standards and 2.00 times the applicable passenger car standards and 2.00 times the applicable light-duty truck and medium-duty vehicle standards shown in the table. Both the projected emissions and the HWFET standard shall be rounded to the nearest 0.1 gm/mi before being compared.
(6) For vehicles from evaporative emissions families with projected 50,000 mile evaporative emissions values below 1.0 gm/test, an adjustment to the hydrocarbon exhaust emission standards may be granted by the Executive Officer. The adjusted standard will be calculated using the following formula:

$$HC_{ex} = .75\ (.185 - [(Di+3.3\ Hs) \div (29.4)]) + HC_{o}$$

Where:

HC_{ex} = adjusted exhaust hydrocarbon standard

HC_{o} = unadjusted exhaust hydrocarbon standard

Di = diurnal evaporative emissions

Hs = hot soak evaporative emissions.

(7) Standards for diesels only

(8) Oxides of nitrogen standard of 1.5 grams per mile for turbocharged diesels only.

(b) The test procedures for determining compliance with these standards are set forth in "California Exhaust Emission Standards and Test Procedures for 1981 and Subsequent Model Passenger Cars, Light-Duty Trucks, and Medium-Duty Vehicles," adopted by the Air Resources Board on November 23, 1976, as last amended ~~May 24, 1978 and February 9, 1979, and May 22, 1979,~~ August 28, 1980.

Attachment B

State of California
AIR RESOURCES BOARD

Note: These procedures are printed in a style to indicate the adopted changes. New text is underlined and deleted portions are noted.

CALIFORNIA EXHAUST EMISSION STANDARDS AND TEST PROCEDURES FOR 1981 AND SUBSEQUENT MODEL PASSENGER CARS, LIGHT-DUTY TRUCKS, AND MEDIUM-DUTY VEHICLES

Adopted: November 23, 1976
Adopted: December 14, 1976
Amended: May 26, 1977
Amended: June 8, 1977
Amended: June 22, 1977
Amended: September 20, 1977
Amended: January 15, 1978
Amended: March 1, 1978
Amended: April 10, 1978
Amended: May 24, 1978
Amended: February 9, 1979
Amended: May 22, 1979
Amended: March 5, 1980
Amended: March 26, 1980
Amended: August 27, 1980
Amended: August 28, 1980

CALIFORNIA EXHAUST EMISSION STANDARDS AND TEST PROCEDURES FOR 1981 AND SUBSEQUENT MODEL PASSENGER CARS, LIGHT-DUTY TRUCKS AND MEDIUM-DUTY VEHICLES

The provisions of Subparts A and B, Part 86, Title 40, Code of Federal Regulations, as they existed on April 15, 1978, are hereby adopted as the California Exhaust Emission Standards and Test Procedures for 1981 and Subsequent Model Passenger Cars, Light-Duty Trucks and Medium-Duty Vehicles, with the following exceptions and additions:

1. Applicability

   a. These test procedures are applicable to 1981 and subsequent model passenger cars, light-duty trucks and medium-duty vehicles, except motorcycles. References to "light-duty trucks" in 40 CFR 86 shall apply both to "light-duty trucks" and "medium-duty vehicles" in these procedures.

   b. Any reference to vehicle sales throughout the United States shall mean vehicle sales in California.

   c. Regulations concerning EPA hearings, EPA inspections, specific language on the Certificate of Conformity, evaporative emissions, high-altitude vehicles and testing, and heavy-duty engines and vehicles shall not be applicable to these procedures, except where specifically noted.

2. Definitions

   a. "Administrator" means the Executive Officer of the Air Resources Board.

   b. "Certificate of Conformity" means Executive Order certifying vehicles for sale in California.

   c. "Certification" means certification as defined in Section 39018 of the Health and Safety Code.

   d. "Passenger car" means any motor vehicle designed primarily for transportation of persons and having a capacity of twelve persons or less.

e. "Heavy-duty engine" means an engine which is used to propel a heavy-duty vehicle.

f. "Heavy-duty vehicle" means any motor vehicle having a manufacturer's gross vehicle weight rating greater than 6,000 pounds, except passenger cars.

g. "Light-duty truck" means any motor vehicle, rated at 6,000 pounds gross vehicle weight or less, which is designed primarily for purposes of transportation of property or is a derivative of such a vehicle, or is available with special features enabling off-street or off-highway operation and use.

h. "Medium-duty vehicle" means any heavy-duty vehicle having a manufacturer's gross vehicle weight rating of 8500 pounds or less.

3. Test Procedures

a. In order to demonstrate compliance with a non-methane hydrocarbon emission standard, hydrocarbon emissions shall be measured in accordance with the "California Non-Methane Hydrocarbon Test Procedures."

b. Durability data submitted pursuant to subparagraph 86.078-23(f) may be from vehicles previously certified by EPA or ARB.

c. The requirements in subparagraph 86.078-28(a)(4)(i)(B) (durability vehicles must meet emission standards) refer, for each pollutant, to the highest of either the federal or California emission standards.

d. In paragraph 86.079-21 (Application for certification), amend subparagraph (b)(5) to read:

(5) A statement of maintenance and procedures consistent with the restrictions imposed under subparagraph 86.078-25(a)(1), necessary to assure that the vehicles (or engines) covered by a certificate of conformity in operation in normal use conform to the regulations, and a description of the program for training of personnel for such maintenance, and the equipment required.

e. In paragraph 86.078-25 (Maintenance):

1. Amend subparagraph (a)(1) to read as follows:

(1) Scheduled maintenance on the engine, emission control system and fuel system of durability vehicles shall, unless otherwise provided pursuant to paragraph (a)(5)(iii), be restricted as set forth in the following provisions.

(i)(A) for gasoline-fueled vehicles, maintenance shall be restricted to the inspection, replacement, cleaning, adjustment and/or service of the following items at intervals no more frequent than indicated:

(1) Drive belts on engine accessories (tension adjustment only); (30,000 miles).

(2) Valve lash (15,000 miles).

(3) Spark plugs (30,000 miles).

(4) Air filter (30,000 miles).

(5) Exhaust gas sensor (30,000 miles): Provided that an audible and/or visible signal approved by the Executive Officer alerts the vehicle operator to the need for sensor maintenance at the mileage point.

(6) Choke (cleaning or lubrication only); (30,000 miles).

(7) In addition, adjustment of the engine idle speed (curb idle and fast idle), valve lash, and engine bolt torque may be performed once during the first 5,000 miles of scheduled driving, provided the manufacturer makes a satisfactory showing that the maintenance will be performed on vehicles in use.

(B) for diesel-powered vehicles, maintenance shall be restricted to the following items at intervals no more frequent than every 12,500 miles of scheduled driving, provided that no maintenance may be performed after 45,000 miles of scheduled driving:

(1) Adjust low idle speed.

(2) Adjust valve lash if required.

(3) Adjust injector timing.

(4) Adjust governor.

(5) Clean and service injector tips.

(6) Adjust drive belt tension on engine accessories.

(7) Check engine bolt torque and tighten as required.

(ii) Change of engine and transmission oil, change or service of oil filter and, for diesel-powered vehicles only, change or service of fuel filter and air filter, will be allowed at the mileage intervals specified in the manufacturer's maintenance instructions.

(iii) Maintenance shall be conducted in a manner consistent with service instructions and specifications provided by the manufacturer for use by customer service personnel.

(2) Delete subparagraph (a)(3) (Service of exhaust gas recirculation system).

(3) Delete subparagraph (a)(4) (Service of catalytic converter).

f. In paragraph 86.078-38 (Maintenance instructions):

1. Amend subparagraph (a) to read:

(a) The manufacturer shall furnish or cause to be furnished to the purchaser of each new motor vehicle (or motor vehicle engine) subject to the standards prescribed in paragraphs 86.078-8 through 86.078-11 as applicable, written instructions for the maintenance and use of the vehicle (or engine) by the purchaser as may be reasonable and necessary to assure the proper functioning of emission control systems in normal use. Such instructions shall be consistent with and not require maintenance in excess of the restrictions imposed under subparagraph 86.078-25(a)(1), except that the instructions may, subject to approval by the Administrator, require additional maintenance for vehicles operated under extreme conditions. In addition, subject to approval by the Administrator, the instructions may require inspections necessary to insure safe operation of the vehicle in use.

In addition to any maintenance which may be required pursuant to the preceding paragraph, the instructions may also recommend such inspections, maintenance, and repair as may be reasonable and necessary for the proper functioning of the vehicle and its emission control systems. If the instructions recommend maintenance in addition to that which may be required pursuant to the preceding paragraph, they shall distinguish clearly between required and recommended maintenance.

2. Amend subparagraph (c)(1) to read:

(1) Such instructions shall specify the performance of all scheduled maintenance performed by the manufacturer under subparagraph 86.078-25(a)(1).

If the instructions specify recommended maintenance as well as required maintenance, they shall distinguish clearly between the two.

3. Amend subparagraph (d) by adding a new subparagraph (3) to read:

(3) Such instructions shall specify the performance of all scheduled maintenance performed by the manufacturer under subparagraph 86.078-25(a)(1).

If the instructions specify recommended maintenance as well as required maintenance, they shall distinguish clearly between the two.

g. Amend subparagraph 86.078-39(a) (Submission of maintenance instructions) to read:

(a) The manufacturer shall provide to the Administrator, no later than the time of the submission required by paragraph 86.078-23 a copy of the maintenance instructions which the manufacturer proposes to supply to the ultimate purchaser in accordance with subparagraph 86.078-38(a). The Administrator will review such instructions to determine whether they are consistent with federal requirements, and to determine whether the instructions for required maintenance are consistent with the restrictions imposed under subparagraph 86.078-25(a)(1). The Administrator will notify the manufacturer of his determinations.

4. Standards

The following standards represent the maximum projected exhaust emissions for the useful life of the vehicle.

Model Year	Vehicle Type (a)	Equivalent Inertia Weight (lbs.)(b)	Exhaust Emission Standards (grams per vehicle mile) Non-Methane Hydrocarbons(c)	Carbon Monoxide	Oxides of Nitrogen (NO_2)(e)
1981	PC	All	(0.41)	3.4	1.0
	PC(d)	All	0.39 (0.41)	7.0	0.7
	PC(g)	All	0.39 (0.41)	7.0	1.5
	LDT, MDV	0-3999	0.39 (0.41)	9.0	1.0
	LDT,MDV(h)	0-3999	0.39 (0.41)	9.0	1.5
	LDT, MDV	4000-5999	0.50 (0.50)	9.0	1.5
	MDV	6000&larger	0.60 (0.60)	9.0	2.0
1982	PC	All	0.39 (0.41)	7.0	0.4
	PC(d)	All	0.39 (0.41)	7.0	0.7
	PC(i)	All	0.39 (0.41)	7.0	1.0
	Diesel PC	All	0.39 (0.41)	7.0	1.2
	LDT, MDV	0-3999	0.39 (0.41)	9.0	1.0
	LDT, MDV	4000-5999	0.50 (0.50)	9.0	1.5
	LDT,MDV(h)	0-3999	0.39 (0.41)	9.0	1.5
	MDV	6000&larger	0.60 (0.60)	9.0	2.0
1983 & Sub-sequent	PC	All	0.39 (0.41)	7.0	0.4
	LDT, MDV	0-3999	0.39 (0.41)	9.0	0.4
	LDT, MDV	4000-5999	0.50 (0.50)	9.0	1.0
	MDV	6000&larger	0.60 (0.60)	9.0	1.5
1983(i)	PC	All	0.39 (0.41)	7.0	0.7
	LDT, MDV	0-3999	0.39 (0.41)	9.0	1.0 (j)
1984(i)	PC	All	0.39 (0.41)	7.0	0.7
	LDT, MDV	0-3999	0.39 (0.41)	9.0	0.7
1985(i)	LDT, MDV	0-3999	0.39 (0.41)	9.0	0.7

Model Year	Vehicle Type (a)	Equivalent Inertia Weight (lbs.)(b)	100,000 Mile Exhaust Emission Standards (grams per vehicle mile) Non-Methane Hydrocarbons(c)~~(f)~~	Carbon Monoxide	Oxides of Nitrogen NO_2(e)
1981	PC(Option 1)	All	0.39 (f)	3.4	1.5
	PC(Option 2)	All	0.46 (f)	4.0	1.5
	LDT, MDV (Option 1)	0-3999	0.39 (0.41) (f)	9.0	1.5
	LDT, MDV (Option 2)	0-3999	0.46 (f)	10.6	1.5
	LDT, MDV	4000-5999	0.50 (0.50) (f)	9.0	2.0
	MDV	6000+larger	0.60 (0.60) (f)	9.0	2.3
1982	PC(Option 1)	All	(0.41)	7.0	1.0 (k)
	PC(Option 2)	All	0.46	8.3	1.0 (k)
	LDT, MDV (Option 1)	0-3999	0.39 (0.41)	9.0	1.5
	LDT, MDV (Option 2)	0-3999	0.46	10.6	1.5
	LDT, MDV	4000-5999	0.50 (0.50)	9.0	2.0
	MDV	6000&larger	0.60 (0.60)	9.0	2.3
1983 & Sub-sequent	PC	All	0.39 (0.41)	7.0	1.0
	PC	All	0.46	8.3	1.0
	LDT, MDV (Option 1)	0-3999	0.39 (0.41)	9.0	1.0
	LDT, MDV (Option 2)	0-3999	0.46	10.6	1.0
	LDT, MDV	4000-5999	0.50 (0.50)	9.0	1.5
	MDV	6000&larger	0.60 (0.60)	9.0	2.0

(a) "PC" means passenger cars.
"LDT" means light-duty trucks.
"MDV" means medium-duty vehicles.

(b) Equivalent inertia weights are determined under subparagraph 86.129-79(a).

(c) Hydrocarbon standards in parentheses apply to total hydrocarbons.

(d) The second set of passenger car standards is optional. A manufacturer must select either the primary or optional sets of standards for its full product line for the entire two-year period.

(e) The maximum projected emissions of oxides of nitrogen measured on the federal Highway Fuel Economy Test (HWFET; 40 CFR Part 600, Subparagraph B) shall be no greater than 1.33 times the applicable passenger car standards and 2.0 times the applicable light-duty truck and medium-duty vehicle standards shown in the table. Both the projected emissions and the HWFET standard shall be rounded to the nearest 0.1 gm/mi before being compared.

(f) For vehicles from evaporative emissions families with projected 50,000 mile evaporative emissions values below 1.0 gm/test, an adjustment to the hydrocarbon exhaust emission standard may be granted by the Executive Officer. The adjusted standard will be calculated using the following formula:

$$HC_{ex} = .75\ (.185 - \frac{Di+3.3\ Hs}{29.4}\ ) + HC_o$$

Where:

HC_{ex} = adjusted exhaust hydrocarbon standard

HC_o = unadjusted exhaust hydrocarbon standard

Di = diurnal evaporative emissions
Hs = hot soak evaporative emissions.

(g) For vehicles certified to special standards authorized by Section 1960.2, Article 2, subchapter 1, Chapter 3, Title 13, California Administrative Code.

(h) For vehicles certified to special standards authorized by Section 1960.3, Article 2, subchapter 1, Chapter 3, Title 13, California Administrative Code.

(i) For vehicles certified to special standards authorized by Section 1960.4, Article 2, Subchapter 1, Chapter 3, Title 13, California Administrative Code. Special standards revert to "1983 and subsequent" standards for 1985 and subsequent passenger cars and 1986 and subsequent LDTs and MDVs.

(j) The Executive Officer may grant limited relief from the 1983 special NOx standard to a manufacturer who exceeds the standard because of unforseen technical problems.

(k) Optionally, for turbocharged diesels, the NOx standard is 1.5 grams per mile.

5. Additional Requirement

a. A statement must be supplied that the production vehicles shall be in all material respects the same as those for which certification is granted.

b. If a gasoline-fueled vehicle manufacturer requires the use of unleaded fuel, a statement will be required that the engine and transmission combinations for which certification is requested are designed to operate satisfactorily on a gasoline having a research octane number not greater than 91.

c. Labeling required pursuant to paragraph 86.079-35 and Section 1965, Chapter 3, Title 13 of the California Administrative Code shall conform with the requirements specified in the "California Motor Vehicle Tune-Up Label Specifications."

d. For gasoline-powered vehicles evidence shall be supplied that the air/fuel metering system or secondary air injection system is capable of providing sufficient oxygen to theoretically allow enough oxidation to attain the CO emission standard at barometric pressures equivalent to those expected at altitudes ranging from sea level to 6,000 feet elevation.

e. The mechanism for adjusting the idle air/fuel mixture, if any, shall be designed so that either:

(i) The mixture adjustment mechanism is not visible, even with the air cleaner removed, and special tools and/or procedures are required to make adjustments; or

(ii) in the alternative, the Executive Officer may, upon reasonable notice to the manufacturer, require that a certification test of a vehicle be conducted with the idle air/fuel mixture at any setting which the Executive Officer finds corresponds to settings likely to be encountered in actual use. The Executive Officer, in making this finding, shall consider the difficulty of making adjustments, damage to the carburetor in the event of any effort to make an improper adjustment, and the need to replace parts following the adjustment.

The manufacturer shall submit for approval by the Executive Officer his or her proposed method for compliance with this requirement in his or her preliminary application for certification.

f. The exhaust emissions shall be measured from all exhaust emission data vehicles tested in accordance with the federal Highway Fuel Economy Test (HWFET; 40 CFR Part 600 Subpart B). The oxides of nitrogen emissions measured during such tests shall be multiplied by the oxides of nitrogen deterioration factor computed in accordance with paragraph 86.078-28, and then rounded and compared with the standard as set forth in paragraph 4 above. All data obtained pursuant to this paragraph shall be reported in accordance with procedures applicable to other exhaust emissions data required pursuant to these procedures.

In the event that one or more of the manufacturer's emission data vehicles fail the HWFET standard listed in paragraph 4, the manufacturer may submit to the Executive Officer engineering data or other evidence showing that the system is capable of complying with the standard. If the Executive Officer finds, on the basis of an engineering evaluation, that the system can comply with the HWFET standard, he or she may accept the information supplied by the manufacturer in lieu of vehicle test data.

g. The manufacturer shall submit to the Executive Officer a statement that those vehicles for which certification is requested have driveability and performance characteristics which satisfy that manufacturer's customary driveability and performance requirements for vehicles sold in the United States. This statement shall be based on driveability data and other evidence showing compliance with the manufacturer's performance criteria. This statement shall be supplied with the manufacturer's final application for certification, and with all running changes for which emission testing is required.

If the Executive Officer has evidence to show that in-use vehicles demonstrate poor performance that could result in wide-spread tampering with the emission control systems, he or she may request all driveability data and other evidence used by the manufacturer to justify the performance statement.

6. Optional 100,000 Mile Certification Procedure

The alternate emission standards shown in paragraph (4) above shall apply to any engine family which meets all of the following additional requirements:

a. Each exhaust emission durability data vehicle shall be driven, with all emission control systems installed and operating, for 100,000 miles or such lesser distance as the Executive Officer may agree to as meeting the objectives of this procedure. Compliance with the emission standards shall be established as follows:

(i) The linear regression line for all pollutants shall be established by use of all required data from tests of the durability vehicle at every 5,000 mile intervals from 5,000 to 100,000 miles. The requirements in subparagraph 86.078-28(a)(4)(i)(B)(durability vehicles must meet emissions standards) refer, for each pollutant, to the highest of either the federal 50,000 mile or California 100,000 mile emission standards.

(ii) Compliance with the hydrocarbon and carbon monoxide standards shall be determined as follows:

(a) For Option 1:

(A) the interpolated 4,000 and 50,000 mile points on the linear regression line in (i) shall not exceed the appropriate hydrocarbon and carbon monoxide standards, except as in (B) below.

(B) the linear regression line in (i) may exceed the standard provided that no data point exceeds the standard.

(C) the hydrocarbon and carbon monoxide data from the 4,000 mile test point of the emission data vehicle shall be multiplied by the deterioration factor computed by dividing the interpolated 50,000 mile point by the interpolated 4,000 mile point. These values shall not exceed the appropriate hydrocarbon and carbon monoxide standards.

(b) For Option 2:

(A) the interpolated 4,000 and 100,000 mile points on the linear regression line in (i) shall not exceed the appropriate hydrocarbon and carbon monoxide standards, except as in (B) below.

(B) the linear regression line in (i) may exceed the standard provided that no data point exceeds the standard.

(C) the hydrocarbon and carbon monoxide data from the 4,000 mile test point of the emission data vehicle shall be multiplied by the deterioration factor computed by dividing the interpolated 100,000 mile point by the interpolated 4,000 mile point. These values shall not exceed the appropriate 100,000 mile hydrocarbon and carbon monoxide standards.

(iii) Compliance with the oxides of nitrogen standard for Options 1 and 2 shall be determined as follows:

(a) the interpolated 4,000 and 100,000 mile points on the linear regression line in (i) shall not exceed the appropriate 100,000 mile oxides of nitrogen standard except as in (b) below.

(b) the linear regression line in (i) may exceed the standard provided that no data point exceeds the standard.

(c) the oxides of nitrogen data from the 4,000 mile test point of the emission data vehicle shall be multiplied by the deterioration factor computed by dividing the interpolated 100,000 mile point by the interpolated 4,000 mile point. These values shall not exceed the appropriate 100,000 mile oxides of nitrogen standard.

All references in these test procedures to "useful life," 5 years, and 50,000 miles shall mean "total life," 10 years, and 100,000 miles, respectively, except in subparagraph (ii).

b. Only the following scheduled maintenance shall be allowed under subparagraph 86.078.25(a)(1)(i).

25(a)(1)(i)(A) Option 1. For 1981 and later model gasoline or diesel-fueled vehicles, maintenance shall be restricted to the inspection, replacement, cleaning, adjustment, and/or service of the following items at intervals no more frequent than indicated.

(1) Drive belt tension on engine accessories (30,000 miles).
(2) Valve lash (15,000 miles).
(3) Spark plugs (30,000 miles).
(4) Air filter (30,000 miles).
(5) Exhaust gas sensor (30,000 miles); Provided that an audible and/or visible signal approved by the Executive Officer alerts the vehicle operator to the need for sensor maintenance.
(6) Choke, cleaning or lubrication only (30,000 miles).
(7) Idle speed (30,000 miles).
(8) Fuel Filter (30,000 miles).
(9) Injection timing (30,000 miles).

25(a)(1)(i)(B) Option 2. For 1981 and later model gasoline or diesel-fueled vehicles, maintenance shall be restricted to the inspection, replacement, cleaning, adjustment, and/or service of the following items at intervals no more frequent than indicated:

(1) Drive belt tension on engine accessories (30,000 miles).
(2) Valve lash (15,000 miles).
(3) Spark plugs (30,000 miles).
(4) Air filter (30,000 miles).
(5) Fuel filter (30,000 miles).
(6) Idle speed (30,000 miles).
(7) Injection timing (30,000 miles).

(iii) In addition, adjustment of the engine idle speed (curb idle and fast idle), valve lash, and engine bolt torque may be performed once during the first 5,000 miles of scheduled driving, provided the manufacturer makes a satisfactory showing that the maintenance will be performed on vehicles in use.

c. The manufacturer agrees to apply to vehicles certified under this paragraph the provisions of Section 43204 of the California Health and Safety Code for a period of ten year or 100,000 miles, whichever first occurs.

State of California

Memorandum

To : Huey D. Johnson
Secretary
Resources Agency

Date : October 3, 1980

Subject: Filing of Notice of Decision of the Air Resources Board

From : Air Resources Board

Pursuant to Title 17, Section 60007(b), and in compliance with Air Resources Board certification under section 21080.5 of the Public Resources Code, the Air Resources Board hereby forwards for posting the attached notice of decision and response to environmental comments raised during the comment period.

Sally Rump

Sally Rump
BOARD SECRETARY

Attach: [redacted]
Resolution 80-54
Resolution 80-56

FINDING OF EMERGENCY

The Air Resources Board finds that an emergency exists and that the adoption of the attached amendments to Board regulations is necessary for the immediate preservation of the general welfare. A statement of the facts concerning this emergency action follows:

1. A hearing to amend Section 1960.1 of Title 13, California Administrative Code and associated test procedures has been held commencing at 10:00 a.m., August 27, 1980, at the State Building, 107 So. Broadway, Los Angeles, California.

2. The amendments to the regulations are adopted under Health and Safety Code Sections 39600 and 39601 to implement Health and Safety Code Sections 43100 and 43101.

3. Under existing regulations, manufacturers of designated diesel vehicles are required to meet a 100,000 mile exhaust emission standard of 1.0 gram per mile for oxides of nitrogen (NOx) for the 1982 model year. As a result of a recent regulatory action by the federal Environmental Protection Agency, they must also meet an emission standard for particulate matter of 0.6 gram per mile. The action taken by the Board incorporates the 0.6 gram per mile particulate standard into Title 13, and relaxes the existing 1982 model year 1.0 gram per mile NOx standard for 100,000 miles to 1.2 grams per mile for 50,000 miles for naturally aspirated diesels and 1.5 grams per mile for 100,000 miles for turbocharged diesels.

4. Immediate action to amend Board regulations to relax the 1982 emission standard for NOx is needed to preserve the general welfare in that some manufacturers of light-duty diesel automobiles are unable to meet the existing California NOx standard of 1.0 gram per mile for a useful vehicle life of 100,000 miles for the 1982 model years. Vehicle certification for the 1982 model year must begin in the fall of 1980 for most manufacturers; it is therefore imperative that they know the exact NOx standards they must meet for the 1982 model year. The failure to consider the 1982 diesel standards, and in particular to modify the 1.0 gram per mile NOx standard, at this time would delay the manufacturer's certification schedules and delay or prevent introduction in California of several engine families of emissions durable diesel engines. Some manufacturers would be unable to market diesels in California in 1982 unless the NOx standard is changed immediately. This would cause substantial economic harm to affected manufacturers, their distributors and dealers in California, and the public in general. Immediate action is also needed to commit California to enforcement of the recently adopted federal standard for control of particulate emissions from diesel vehicles. Increased sales of diesels in California will cause increased emissions of potentially carcinogenic particulate matter. In order to protect public health, California must enforce the federal standard until it can take appropriate action to adopt a California emission standard for these pollutants.

State of California
AIR RESOURCES BOARD

Resolution 80-54

August 27, 1980

RECEIVED BY
Office of the Secretary

OCT 0 6 1980

Resources Agency of California

WHEREAS, Section 39601 of the Health and Safety Code authorizes the Air Resources Board to adopt standards, rules and regulations necessary for the proper execution of the powers and duties granted to and imposed upon the Board by law:

WHEREAS, Section 43210 of the Health and Safety Code requires that the Board adopt regulations which provide for the testing of new motor vehicles on factory assembly lines or in such manner as the Board determines best suited to carry out the purpose of Part 5 (commencing with Section 43000), Division 26, of the Health and Safety Code;

WHEREAS, Section 43000(e) of the Health and Safety Code states that emission standards applied to new motor vehicles are standards with which all new motor vehicles shall comply;

WHEREAS, the California Environmental Quality Act and Board regulations require that no project having adverse environmental impacts be adopted as originally proposed if feasible alternatives or mitigation measures are available;

WHEREAS, the Board finds that some small-volume manufacturers need additional lead time to meet certain exhaust emission standards;

WHEREAS, a federal court vacated the federal waiver of Section 209(b) for certain California standards to the extent that the waiver denied small manufacturers the lead time to which they were entitled pursuant to Section 202(b)(1)(B) of the Clean Air Act;

WHEREAS, the Board has allowed light-duty truck and medium-duty vehicle NOx standards for manufacturers to lag passenger car standards by one year to provide time to prove and transfer emission control technology;

WHEREAS, the Board finds that the standards in the proposed regulation, Section 1960.4, Title 13, California Administrative Code, are consistent with Sections 1960.2 and 1960.3 previously adopted by the Board; and

WHEREAS, the Board has complied with the requirements of the Administrative Procedure Act dealing with agency adoption of emergency regulations (Government Code Section 11421).

NOW, THEREFORE BE IT RESOLVED, that the Board hereby amends its regulation in Article 2, Subchapter 1, Chapter 3, Title 13, California Administrative Code, by adding section 1960.4 to read as follows:

1960.4 Special Standards for 1982 and Subsequent Model Passenger Cars, and 1983 and Subsequent Model Light-Duty Trucks and Medium-Duty Vehicles, 0-3999 Pound Equivalent Inertia Weight

(a) 1982 Model Passenger Cars and 1983 Model Light-Duty Trucks and Medium-Duty Vehicles.

(1) The oxides of nitrogen emissions from each 1982 model Passenger Car and each 1983 model Light-Duty Truck and Medium-Duty Vehicle engine family and subgroup produced by a manufacturer subject to "in lieu" standards pursuant to Section 202(b)(1)(B) of the Clean Air Act as amended in 1977, shall not exceed a standard of 1.0 gram per vehicle mile.

(2) Notwithstanding any other provision of this Chapter, for any vehicle manufacturer subject to "in lieu" standards pursuant to Section 202(b)(1)(B) of the Clean Air Act as amended in 1977, the oxides of nitrogen emissions from 1982 model Passenger Cars; and, separately, 1983 model Light-Duty Trucks and Medium-Duty Vehicles, 0-3999 Pounds Equivalent Inertia Weight, shall not exceed an assembly line test level of 0.7 gram per vehicle mile as determined on a production average basis as measured by calendar quarter and evaluated on a cumulative basis.

(3) Joint ARB-manufacturer evaluations of production average data will be made each six months, starting with production test data accumulated through December 31, 1981, and appropriate relief will be made available to such manufacturer should unanticipated technical problems yield an inability to meet the required production average level.

(4) All definitions, standards, test procedures and other requirements of this Chapter not inconsistent with this section shall apply to all vehicles produced by such manufacturer for sale in California.

(b) 1983 Model Passenger Cars and 1984 Model Light-Duty Trucks and Medium-Duty Vehicles.

(1) The oxides of nitrogen emissions from each 1983 model Passenger Car and each 1984 model Light-Duty Truck and Medium-Duty Vehicle engine family and subgroup produced by a manufacturer subject to "in lieu" standards pursuant to Section 202(b)(1)(B) of the Clean Air Act as amended in 1977, shall not exceed a standard of 0.7 gram per vehicle mile. Appropriate relief will be made available to such manufacturer should unanticipated technical problems yield an inability to meet this standard.

(2) Notwithstanding any other provision of this Chapter, for any vehicle manufacturer subject to "in lieu" standards pursuant to Section 202(b)(1)(B) of the Clean Air Act as amended in 1977, the oxides of nitrogen emissions from 1983 model Passenger Cars; and, separately, 1984 model Light-Duty Trucks and Medium-Duty Vehicles, 0-3999 Pounds Equivalent Inertia Weight, shall not exceed an assembly line test level of 0.7 gram per vehicle mile as determined on a production average basis as measured by calendar quarter.

(3) Joint ARB-manufacturer evaluations of production average data will be made each six months, starting with production test data accumulated through December 31, 1982, and appropriate relief will be made available to such manufacturer should unanticipated technical problems yield an inability to meet the required production average level.

(4) All definitions, standards, test procedures and other requirements of this Chapter not inconsistent with this section shall apply to all vehicles produced by such manufacturer for sale in California.

(c) 1984 Model Passenger Cars and 1985 Model Light-Duty Trucks and Medium-Duty Vehicles.

(1) The oxides of nitrogen emissions from each 1984 model Passenger Car and each 1985 model Light-Duty Truck and Medium-Duty Vehicle engine family and subgroup produced by a manufacturer subject to "in lieu" standards pursuant to Section 202(b)(1)(B) of the Clean Air Act as amended in 1977, shall not exceed a standard of 0.7 gram per vehicle mile.

(2) Notwithstanding any other provision of this Chapter, for any vehicle manufacturer subject to "in lieu" standards pursuant to Section 202(b)(1)(B) of the Clean Air Act as amended in 1977, the oxides of nitrogen emissions from 1984 model Passenger Cars; and, separately, 1985 model Light-Duty Trucks and Medium-Duty Vehicles, 0-3999 Pounds Equivalent Inertia Weight, shall not exceed an assembly line test level of 0.7 gram per vehicle mile as determined on a production average basis as measured by calendar quarter.

(3) Joint ARB-manufacturer evaluation of production average data will be made each six months, starting with production test data accumulated through December 31, 1983, and appropriate relief will be made available to such manufacturer should unanticipated technical problems yield an inability to meet the required production average level.

(4) All definitions, standards, test procedures and other requirements of this Chapter not inconsistent with this section shall apply to all vehicles produced by such manufacturer for sale in California.

BE IT FURTHER RESOLVED, that the Board hereby amends: "California Exhaust Emission Standards and Test Procedures for 1981 and Subsequent Model Passenger Cars, Light-Duty Trucks and Medium-Duty Vehicles" as set forth in Attachment 1.

BE IT FURTHER RESOLVED, that the Board hereby finds that its regulations in Sections 1960.4, Title 13, California Administrative Code, and related 1981 and subsequent year exhaust emission standards and test procedures are individually for each vehicle category, and, in the aggregate, at least as protective of public health and welfare as applicable federal regulations.

I certify that the above is a true and correct copy of Resolution 80-54 as adopted by the Air Resources Board.

Sally Rump
BOARD SECRETARY

State of California
AIR RESOURCES BOARD

Note: These procedures are printed in a style to indicate the adopted changes. New text is underlined and deleted portions are noted.

CALIFORNIA EXHAUST EMISSION STANDARDS AND TEST PROCEDURES FOR 1981 AND SUBSEQUENT MODEL PASSENGER CARS, LIGHT-DUTY TRUCKS, AND MEDIUM-DUTY VEHICLES

Adopted: November 23, 1976
Adopted: December 14, 1976
Amended: May 26, 1977
Amended: June 8, 1977
Amended: June 22, 1977
Amended: September 20, 1977
Amended: January 15, 1978
Amended: March 1, 1978
Amended: April 10, 1978
Amended: May 24, 1978
Amended: February 9, 1979
Amended: May 22, 1979
Amended: March 5, 1980
Amended: March 26, 1980
Amended: August 27, 1980

CALIFORNIA EXHAUST EMISSION STANDARDS AND TEST PROCEDURES FOR 1981 AND SUBSEQUENT MODEL PASSENGER CARS, LIGHT-DUTY TRUCKS AND MEDIUM-DUTY VEHICLES

The provisions of Subparts A and B, Part 86, Title 40, Code of Federal Regulations, as they existed on April 15, 1978, are hereby adopted as the California Exhaust Emission Standards and Test Procedures for 1981 and Subsequent Model Passenger Cars, Light-Duty Trucks and Medium-Duty Vehicles, with the following exceptions and additions:

1. Applicability

   a. These test procedures are applicable to 1981 and subsequent model passenger cars, light-duty trucks and medium-duty vehicles, except motorcycles. References to "light-duty trucks" in 40 CFR 86 shall apply both to "light-duty trucks" and "medium-duty vehicles" in these procedures.

   b. Any reference to vehicle sales throughout the United States shall mean vehicle sales in California.

   c. Regulations concerning EPA hearings, EPA inspections, specific language on the Certificate of Conformity, evaporative emissions, high-altitude vehicles and testing, and heavy-duty engines and vehicles shall not be applicable to these procedures, except where specifically noted.

2. Definitions

   a. "Administrator" means the Executive Officer of the Air Resources Board.

   b. "Certificate of Conformity" means Executive Order certifying vehicles for sale in California.

   c. "Certification" means certification as defined in Section 39018 of the Health and Safety Code.

   d. "Passenger car" means any motor vehicle designed primarily for transportation of persons and having a capacity of twelve persons or less.

e. "Heavy-duty engine" means an engine which is used to propel a heavy-duty vehicle.

f. "Heavy-duty vehicle" means any motor vehicle having a manufacturer's gross vehicle weight rating greater than 6,000 pounds, except passenger cars.

g. "Light-duty truck" means any motor vehicle, rated at 6,000 pounds gross vehicle weight or less, which is designed primarily for purposes of transportation of property or is a derivative of such a vehicle, or is available with special features enabling off-street or off-highway operation and use.

h. "Medium-duty vehicle" means any heavy-duty vehicle having a manufacturer's gross vehicle weight rating of 8500 pounds or less.

3. Test Procedures

a. In order to demonstrate compliance with a non-methane hydrocarbon emission standard, hydrocarbon emissions shall be measured in accordance with the "California Non-Methane Hydrocarbon Test Procedures."

b. Durability data submitted pursuant to subparagraph 86.078-23(f) may be from vehicles previously certified by EPA or ARB.

c. The requirements in subparagraph 86.078-28(a)(4)(i)(B) (durability vehicles must meet emission standards) refer, for each pollutant, to the highest of either the federal or California emission standards.

d. In paragraph 86.079-21 (Application for certification), amend subparagraph (b)(5) to read:

(5) A statement of maintenance and procedures consistent with the restrictions imposed under subparagraph 86.078-25(a)(1), necessary to assure that the vehicles (or engines) covered by a certificate of conformity in operation in normal use conform to the regulations, and a description of the program for training of personnel for such maintenance, and the equipment required.

e. In paragraph 86.078-25 (Maintenance):

1. Amend subparagraph (a)(1) to read as follows:

(1) Scheduled maintenance on the engine, emission control system and fuel system of durability vehicles shall, unless otherwise provided pursuant to paragraph (a)(5)(iii), be restricted as set forth in the following provisions.

(i)(A) for gasoline-fueled vehicles, maintenance shall be restricted to the inspection, replacement, cleaning, adjustment and/or service of the following items at intervals no more frequent than indicated:

(1) Drive belts on engine accessories (tension adjustment only); (30,000 miles).

(2) Valve lash (15,000 miles).

(3) Spark plugs (30,000 miles).

(4) Air filter (30,000 miles).

(5) Exhaust gas sensor (30,000 miles): Provided that an audible and/or visible signal approved by the Executive Officer alerts the vehicle operator to the need for sensor maintenance at the mileage point.

(6) Choke (cleaning or lubrication only); (30,000 miles).

(7) In addition, adjustment of the engine idle speed (curb idle and fast idle), valve lash, and engine bolt torque may be performed once during the first 5,000 miles of scheduled driving, provided the manufacturer makes a satisfactory showing that the maintenance will be performed on vehicles in use.

(B) for diesel-powered vehicles, maintenance shall be restricted to the following items at intervals no more frequent than every 12,500 miles of scheduled driving, provided that no maintenance may be performed after 45,000 miles of scheduled driving:

(1) Adjust low idle speed.

(2) Adjust valve lash if required.

(3) Adjust injector timing.

(4) Adjust governor.

(5) Clean and service injector tips.

(6) Adjust drive belt tension on engine accessories.

(7) Check engine bolt torque and tighten as required.

(ii) Change of engine and transmission oil, change or service of oil filter and, for diesel-powered vehicles only, change or service of fuel filter and air filter, will be allowed at the mileage intervals specified in the manufacturer's maintenance instructions.

(iii) Maintenance shall be conducted in a manner consistent with service instructions and specifications provided by the manufacturer for use by customer service personnel.

(2) Delete subparagraph (a)(3) (Service of exhaust gas recirculation system).

(3) Delete subparagraph (a)(4) (Service of catalytic converter).

f. In paragraph 86.078-38 (Maintenance instructions):

1. Amend subparagraph (a) to read:

(a) The manufacturer shall furnish or cause to be furnished to the purchaser of each new motor vehicle (or motor vehicle engine) subject to the standards prescribed in paragraphs 86.078-8 through 86.078-11 as applicable, written instructions for the maintenance and use of the vehicle (or engine) by the purchaser as may be reasonable and necessary to assure the proper functioning of emission control systems in normal use. Such instructions shall be consistent with and not require maintenance in excess of the restrictions imposed under subparagraph 86.078-25(a)(1), except that the instructions may, subject to approval by the Administrator, require additional maintenance for vehicles operated under extreme conditions. In addition, subject to approval by the Administrator, the instructions may require inspections necessary to insure safe operation of the vehicle in use.

In addition to any maintenance which may be required pursuant to the preceding paragraph, the instructions may also recommend such inspections, maintenance, and repair as may be reasonable and necessary for the proper functioning of the vehicle and its emission control systems. If the instructions recommend maintenance in addition to that which may be required pursuant to the preceding paragraph, they shall distinguish clearly between required and recommended maintenance.

2. Amend subparagraph (c)(1) to read:

(1) Such instructions shall specify the performance of all scheduled maintenance performed by the manufacturer under subparagraph 86.078-25(a)(1).

If the instructions specify recommended maintenance as well as required maintenance, they shall distinguish clearly between the two.

3. Amend subparagraph (d) by adding a new subparagraph (3) to read:

(3) Such instructions shall specify the performance of all scheduled maintenance performed by the manufacturer under subparagraph 86.078-25(a)(1).

If the instructions specify recommended maintenance as well as required maintenance, they shall distinguish clearly between the two.

g. Amend subparagraph 86.078-39(a) (Submission of maintenance instructions) to read:

(a) The manufacturer shall provide to the Administrator, no later than the time of the submission required by paragraph 86.078-23 a copy of the maintenance instructions which the manufacturer proposes to supply to the ultimate purchaser in accordance with subparagraph 86.078-38(a). The Administrator will review such instructions to determine whether they are consistent with federal requirements, and to determine whether the instructions for required maintenance are consistent with the restrictions imposed under subparagraph 86.078-25(a)(1). The Administrator will notify the manufacturer of his determinations.

4. Standards

The following standards represent the maximum projected exhaust emissions for the useful life of the vehicle.

Model Year	Vehicle Type (a)	Equivalent Inertia Weight (lbs.)(b)	Exhaust Emission Standards (grams per vehicle mile) Non-Methane Hydrocarbons(c)	Carbon Monoxide	Oxides of Nitrogen (NO_2)(e)
1981	PC	All	(0.41)	3.4	1.0
	PC(d)	All	0.39 (0.41)	7.0	0.7
	PC(g)	All	0.39 (0.41)	7.0	1.5
	LDT, MDV	0-3999	0.39 (0.41)	9.0	1.0
	LDT,MDV(h)	0-3999	0.39 (0.41)	9.0	1.5
	LDT, MDV	4000-5999	0.50 (0.50)	9.0	1.5
	MDV	6000&larger	0.60 (0.60)	9.0	2.0
1982	PC	All	0.39 (0.41)	7.0	0.4
	PC(d)	All	0.39 (0.41)	7.0	0.7
	PC(i)	All	0.39 (0.41)	7.0	1.0
	LDT, MDV	0-3999	0.39 (0.41)	9.0	1.0
	LDT, MDV	4000-5999	0.50 (0.50)	9.0	1.5
	LDT,MDV(h)	0-3999	0.39 (0.41)	9.0	1.5
	MDV	6000&larger	0.60 (0.60)	9.0	2.0
1983 & Sub-sequent	PC	All	0.39 (0.41)	7.0	0.4
	LDT, MDV	0-3999	0.39 (0.41)	9.0	0.4
	LDT, MDV	4000-5999	0.50 (0.50)	9.0	1.0
	MDV	6000&larger	0.60 (0.60)	9.0	1.5
1983(i)	PC	All	0.39 (0.41)	7.0	0.7(j)
	LDT, MDV	0-3999	0.39 (0.41)	9.0	1.0
1984(i)	PC	All	0.39 (0.41)	7.0	0.7
	LDT, MDV	0-3999	0.39 (0.41)	9.0	0.7
1985(i)	LDT, MDV	0-3999	0.39 (0.41)	9.0	0.7

Model Year	Vehicle Type (a)	Equivalent Inertia Weight (lbs.)(b)	100,000 Mile Exhaust Emission Standards (grams per vehicle mile) Non-Methane Hydrocarbons(c)(f)	Carbon Monoxide	Oxides of Nitrogen NO_2(e)
1981	PC(Option 1)	All	0.39	3.4	1.5
	PC(Option 2)	All	0.46	4.0	1.5
	LDT, MDV (Option 1)	0-3999	0.39 (0.41)	9.0	1.5
	LDT, MDV (Option 2)	0-3999	0.46	10.6	1.5
	LDT, MDV	4000-5999	0.50 (0.50)	9.0	2.0
	MDV	6000+larger	0.60 (0.60)	9.0	2.3
1982	PC(Option 1)	All	(0.41)	7.0	1.0
	PC(Option 2)	All	0.46	8.3	1.0
	LDT, MDV (Option 1)	0-3999	0.39 (0.41)	9.0	1.5
	LDT, MDV (Option 2)	0-3999	0.46	10.6	1.5
	LDT, MDV	4000-5999	0.50 (0.50)	9.0	2.0
	MDV	6000&larger	0.60 (0.60)	9.0	2.3
1983 & Sub-sequent	PC	All	0.39 (0.41)	7.0	1.0
	PC	All	0.46	8.3	1.0
	LDT, MDV (Option 1)	0-3999	0.39 (0.41)	9.0	1.0
	LDT, MDV (Option 2)	0-3999	0.46	10.6	1.0
	LDT, MDV	4000-5999	0.50 (0.50)	9.0	1.5
	MDV	6000&larger	0.60 (0.60)	9.0	2.0

(a) "PC" means passenger cars.
"LDT" means light-duty trucks.
"MDV" means medium-duty vehicles.

(b) Equivalent inertia weights are determined under subparagraph 86.129-79(a).

(c) Hydrocarbon standards in parentheses apply to total hydrocarbons.

(d) The second set of passenger car standards is optional. A manufacturer must select either the primary or optional sets of standards for its full product line for the entire two-year period.

(e) The maximum projected emissions of oxides of nitrogen measured on the federal Highway Fuel Economy Test (HWFET; 40 CFR Part 600, Subparagraph B) shall be no greater than 1.33 times the applicable passenger car standards and 2.0 times the applicable light-duty truck and medium-duty vehicle standards shown in the table. Both the projected emissions and the HWFET standard shall be rounded to the nearest 0.1 gm/mi before being compared.

(f) For vehicles from evaporative emissions families with projected 50,000 mile evaporative emissions values below 1.0 gm/test, an adjustment to the hydrocarbon exhaust emission standard may be granted by the Executive Officer. The adjusted standard will be calculated using the following formula:

$$HC_{ex} = .75\ (.185 - \frac{Di+3.3\ Hs}{29.4}\ ) + HC_o$$

Where:

HC_{ex} = adjusted exhaust hydrocarbon standard

HC_o = unadjusted exhaust hydrocarbon standard

Di = diurnal evaporative emissions
Hs = hot soak evaporative emissions.

(g) For vehicles certified to special standards authorized by Section 1960.2, Article 2, subchapter 1, Chapter 3, Title 13, California Administrative Code.

(h) For vehicles certified to special standards authorized by Section 1960.3, Article 2, subchapter 1, Chapter 3, Title 13, California Administrative Code.

(i) For vehicles certified to special standards authorized by Section 1960.4, Article 2, Subchapter 1, Chapter 3, Title 13, California Administrative Code. Special standards revert to "1983 and subsequent" standards for 1985 and subsequent passenger cars and 1986 and subsequent LDTs and MDVs.

(j) The Executive Officer may grant limited relief from the 1983 special NOx standard to a manufacturer who exceeds the standard because of unforseen technical problems.

5. Additional Requirement

a. A statement must be supplied that the production vehicles shall be in all material respects the same as those for which certification is granted.

b. If a gasoline-fueled vehicle manufacturer requires the use of unleaded fuel, a statement will be required that the engine and transmission combinations for which certification is requested are designed to operate satisfactorily on a gasoline having a research octane number not greater than 91.

c. Labeling required pursuant to paragraph 86.079-35 and Section 1965, Chapter 3, Title 13 of the California Administrative Code shall conform with the requirements specified in the "California Motor Vehicle Tune-Up Label Specifications."

d. For gasoline-powered vehicles evidence shall be supplied that the air/fuel metering system or secondary air injection system is capable of providing sufficient oxygen to theoretically allow enough oxidation to attain the CO emission standard at barometric pressures equivalent to those expected at altidues ranging from sea level to 6,000 feet elevation.

e. The mechanism for adjusting the idle air/fuel mixture, if any, shall be designed so that either:

(i) The mixture adjustment mechanism is not visible, even with the air cleaner removed, and special tools and/or procedures are required to make adjustments; or

(ii) in the alternative, the Executive Officer may, upon reasonable notice to the manufacturer, require that a certification test of a vehicle be conducted with the idle air/fuel mixture at any setting which the Executive Officer finds corresponds to settings likely to be encountered in actual use. The Executive Officer, in making this finding, shall consider the difficulty of making adjustments, damage to the carburetor in the event of any effort to make an improper adjustment, and the need to replace parts following the adjustment.

The manufacturer shall submit for approval by the Executive Officer his or her proposed method for compliance with this requirement in his or her preliminary application for certification.

f. The exhaust emissions shall be measured from all exhaust emission data vehicles tested in accordance with the federal Highway Fuel Economy Test (HWFET; 40 CFR Part 600 Subpart B). The oxides of nitrogen emissions measured during such tests shall be multiplied by the oxides of nitrogen deterioration factor computed in accordance with paragraph 86.078-28, and then rounded and compared with the standard as set forth in paragraph 4 above. All data obtained pursuant to this paragraph shall be reported in accordance with procedures applicable to other exhaust emissions data required pursuant to these procedures.

In the event that one or more of the manufacturer's emission data vehicles fail the HWFET standard listed in paragraph 4, the manufacturer may submit to the Executive Officer engineering data or other evidence showing that the system is capable of complying with the standard. If the Executive Officer finds, on the basis of an engineering evaluation, that the system can comply with the HWFET standard, he or she may accept the information supplied by the manufacturer in lieu of vehicle test data.

g. The manufacturer shall submit to the Executive Officer a statement that those vehicles for which certification is requested have driveability and performance characteristics which satisfy that manufacturer's customary driveability and performance requirements for vehicles sold in the United States. This statement shall be based on driveability data and other evidence showing compliance with the manufacturer's performance criteria. This statement shall be supplied with the manufacturer's final application for certification, and with all running changes for which emission testing is required.

If the Executive Officer has evidence to show that in-use vehicles demonstrate poor performance that could result in wide-spread tampering with the emission control systems, he or she may request all driveability data and other evidence used by the manufacturer to justify the performance statement.

6. Optional 100,000 Mile Certification Procedure

The alternate emission standards shown in paragraph (4) above shall apply to any engine family which meets all of the following additional requirements:

a. Each exhaust emission durability data vehicle shall be driven, with all emission control systems installed and operating, for 100,000 miles or such lesser distance as the Executive Officer may agree to as meeting the objectives of this procedure. Compliance with the emission standards shall be established as follows:

(i) The linear regression line for all pollutants shall be established by use of all required data from tests of the durability vehicle at every 5,000 mile intervals from 5,000 to 100,000 miles. The requirements in subparagraph 86.078-28(a)(4)(i)(B)(durability vehicles must meet emissions standards) refer, for each pollutant, to the highest of either the federal 50,000 mile or California 100,000 mile emission standards.

(ii) Compliance with the hydrocarbon and carbon monoxide standards shall be determined as follows:

(a) For Option 1:

(A) the interpolated 4,000 and 50,000 mile points on the linear regression line in (i) shall not exceed the appropriate hydrocarbon and carbon monoxide standards, except as in (B) below.

(B) the linear regression line in (i) may exceed the standard provided that no data point exceeds the standard.

(C) the hydrocarbon and carbon monoxide data from the 4,000 mile test point of the emission data vehicle shall be multiplied by the deterioration factor computed by dividing the interpolated 50,000 mile point by the interpolated 4,000 mile point. These values shall not exceed the appropriate hydrocarbon and carbon monoxide standards.

(b) For Option 2:

(A) the interpolated 4,000 and 100,000 mile points on the linear regression line in (i) shall not exceed the appropriate hydrocarbon and carbon monoxide standards, except as in (B) below.

(B) the linear regression line in (i) may exceed the standard provided that no data point exceeds the standard.

(C) the hydrocarbon and carbon monoxide data from the 4,000 mile test point of the emission data vehicle shall be multiplied by the deterioration factor computed by dividing the interpolated 100,000 mile point by the interpolated 4,000 mile point. These values shall not exceed the appropriate 100,000 mile hydrocarbon and carbon monoxide standards.

(iii) Compliance with the oxides of nitrogen standard for Options 1 and 2 shall be determined as follows:

(a) the interpolated 4,000 and 100,000 mile points on the linear regression line in (i) shall not exceed the appropriate 100,000 mile oxides of nitrogen standard except as in (b) below.

(b) the linear regression line in (i) may exceed the standard provided that no data point exceeds the standard.

(c) the oxides of nitrogen data from the 4,000 mile test point of the emission data vehicle shall be multiplied by the deterioration factor computed by dividing the interpolated 100,000 mile point by the interpolated 4,000 mile point. These values shall not exceed the appropriate 100,000 mile oxides of nitrogen standard.

All references in these test procedures to "useful life," 5 years, and 50,000 miles shall mean "total life," 10 years, and 100,000 miles, respectively, except in subparagraph (ii).

b. Only the following scheduled maintenance shall be allowed under subpargraph 86.078.25(a)(1)(i).

25(a)(1)(i)(A) Option 1. For 1981 and later model gasoline or diesel-fueled vehicles, maintenance shall be restricted to the inspection, replacement, cleaning, adjustment, and/or service of the following items at intervals no more frequent than indicated.

(1) Drive belt tension on engine accessories (30,000 miles).
(2) Valve lash (15,000 miles).
(3) Spark plugs (30,000 miles).
(4) Air filter (30,000 miles).
(5) Exhaust gas sensor (30,000 miles); Provided that an audible and/or visible signal approved by the Executive Officer alerts the vehicle operator to the need for sensor maintenance.
(6) Choke, cleaning or lubrication only (30,000 miles).
(7) Idle speed (30,000 miles).
(8) Fuel Filter (30,000 miles).
(9) Injection timing (30,000 miles).

(a)(1)(i)(B) Option 2. For 1981 and later model gasoline or diesel-fueled vehicles, maintenance shall be restricted to the inspection, replacement, cleaning, adjustment, and/or service of the following items at intervals no more frequent than indicated:

(1) Drive belt tension on engine accessories (30,000 miles).
(2) Valve lash (15,000 miles).
(3) Spark plugs (30,000 miles).
(4) Air filter (30,000 miles).
(5) Fuel filter (30,000 miles).
(6) Idle speed (30,000 miles).
(7) Injection timing (30,000 miles).

(iii) In addition, adjustment of the engine idle speed (curb idle and fast idle), valve lash, and engine bolt torque may be performed once during the first 5,000 miles of scheduled driving, provided the manufacturer makes a satisfactory showing that the maintenance will be performed on vehicles in use.

c. The manufacturer agrees to apply to vehicles certified under this paragraph the provisions of Section 43204 of the California Health and Safety Code for a period of ten year or 100,000 miles, whichever first occurs.

State of California
AIR RESOURCES BOARD

Response to Significant Environmental Issues

Item: Emergency Public Hearing to Consider Amendments to Title 13, California Administrative Code, Regarding Exhaust Emission Standards for Oxides of Nitrogen (NOx) from Vehicles Produced by Small Manufacturers for the 1982-1986 Model Years of Passenger Cars, and Medium-Duty Vehicles and Light-Duty Trucks of 0-3999 Pounds Inertia Weight.

Agenda Item No: 80-15-3

Public Hearing Date: August 27, 1980

Response Date: August 27, 1980

Issuing Authority: Air Resources Board

Comment: None received.

Response: None.

RECEIVED BY
Office of the Secretary

OCT 0 6 1980

Resources Agency of California

Certified: Sally Rump
Board Secretary

Date: October 6, 1980

State of California

Memorandum

To : Huey D. Johnson
Secretary
Resources Agency

Date : October 3, 1980

Subject: Filing of Notice of Decision of the Air Resources Board

From : Air Resources Board

Pursuant to Title 17, Section 60007(b), and in compliance with Air Resources Board certification under section 21080.5 of the Public Resources Code, the Air Resources Board hereby forwards for posting the attached notice of decision and response to environmental comments raised during the comment period.

Sally Rump

Sally Rump
BOARD SECRETARY

Attach: Resolution 80-53
[redacted]
Resolution 80-56

State of California
AIR RESOURCES BOARD

Resolution 80-55

October 22, 1980

WHEREAS, Sections 39600 and 39601 of the Health and Safety Code authorize the Board to adopt vehicle emission standards and test procedures in order to control or eliminate air pollution caused by motor vehicles;

WHEREAS, Section 43652 of the Health and Safety Code requires that every 1955 through 1965 model year motor vehicle subject to registration in this state be equipped with a certified device to control its exhaust emissions in accordance with a schedule of installation adopted by the Board;

WHEREAS, the Board adopted a schedule for installation of exhaust retrofit devices on 1955 through 1965 light-duty motor vehicles (Section 2007, Title 13, California Administrative Code) commencing September 1, 1972 in the South Coast Air Basin; December 1, 1972, in the San Diego Air Basin; and March 1, 1973, in the San Francisco Bay Area Air Basin;

WHEREAS, Section 43659(a) of the Health and Safety Code requires that the Board annually review the 1955 through 1965 exhaust retrofit program and evaluate the benefits of continuing the requirements;

WHEREAS, Section 43659(c) of the Health and Safety Code authorizes the Board, upon determination that the 1955 through 1965 exhaust retrofit requirement is no longer a significant factor for the attainment and maintenance of ambient air quality standards, to adopt a regulation terminating the requirement;

WHEREAS, Section 43659(d) of the Health and Safety Code requires that all 1955 through 1965 model year light-duty motor vehicles equipped with an exhaust retrofit device prior to a program termination date shall continue to be so equipped;

WHEREAS, the California Environmental Quality Act and Board regulations require that no project having adverse environmental impacts be adopted as originally proposed if feasible alternatives or mitigation measures are available;

WHEREAS, the Board has quantified the air quality impacts of terminating the 1955 through 1965 exhaust retrofit program in 1980 and finds that such impacts would be minimal and that feasible mitigation measures are not available in light of the segment of the population upon which the costs of mitigation measures would be imposed;

WHEREAS, the Board finds that the number of 1955 through 1965 model year light-duty vehicles yet to be retrofitted is small, that the emission reduction potential of continuing the program beyond 1980 is small, and that the costs of this small reduction is being imposed on individuals who are often from low income groups;

WHEREAS, the Board finds that the incremental cost effectiveness of continuing the 1955 through 1965 model year light-duty exhaust retrofit program beyond 1980 worsens markedly due to the associated fuel penalty and increasing costs of gasoline;

WHEREAS, the Board finds that the availability of 1955 through 1965 model year light-duty exhaust retrofit devices may become a significant problem due to the present depletion of inventories which are not being restocked;

WHEREAS, a public hearing and other administrative proceedings have been held in accordance with the provisions of Chapter 3.5, Part 1, Division 3, Title 2 of the Government Code;

NOW, THEREFORE, BE IT RESOLVED, that the Board hereby amends Article 3, Subchapter 1, Chapter 3 of Title 13, California Administrative Code as follows:

Add subsection 2007.5 to read:

2007.5 Termination of the 1955 through 1965 Model Year Light-Duty Motor Vehicle Exhaust Emission Control Device Requirements. Commencing January 1, 1981, the requirement for new installations of 1955 through 1965 model year light-duty exhaust retrofit devices pursuant to Section 2007 shall be terminated. All 1955 through 1965 model year light-duty motor vehicles with exhaust retrofit devices which were installed prior to the January 1, 1981, termination date shall continue to be so equipped.

I certify that the above is a true and correct copy of Resolution 80-55, as adopted by the Air Resources Board.

Sally Rump

BOARD SECRETARY

State of California

Memorandum

To : Huey D. Johnson
Secretary
Resources Agency

Date : November 3, 1980

Subject: Filing of Notice of Decision of the Air Resources Board

From : **Air Resources Board**

Pursuant to Title 17, Section 60007(b), and in compliance with Air Resources Board certification under section 21080.5 of the Public Resources Code, the Air Resources Board hereby forwards for posting the attached notice of decision and response to environmental comments raised during the comment period.

Sally Rump

Sally Rump
BOARD SECRETARY

Attach: Resolution 80-44

[redacted]

RECEIVED BY
Office of the Secretary

NOV 3 1980

Resources Agency of California

State of California
AIR RESOURCES BOARD

Response to Significant Environmental Issues

Item: Public Hearing to Consider Repeal of the 1955-65 Model Year Motor Vehicle Exhaust Retrofit Emission Control Requirements - Title 13, California Administrative Code Section 2007

Agenda Item No. 80-20-2

Public Hearing Date: October 22, 1980

Response Date: October 22, 1980

Issuing Authority: Air Resources Board

Comment: The concern was expressed that some increase in emissions will result over levels currently predicted in the State Implementation Plan if this retrofit program is repealed. Given current air quality, some witnesses urged the Board not to repeal any program that effects emissions reductions, even though the reductions are very small. They urged the Board to either retain the program or adopt mitigation measures.

Response: The Board made a finding that the environmental impact of the program is not significant, within the meaning of the California Environmental Quality Act. The Board acknowledged that a slight increase in emissions will result from repealing the program. However, the Board made a finding that mitigation measures are not feasible because of the segment of the population upon which the costs of mitigation would fall, namely a relatively small number of individuals, who are often in lower income brackets. The Board found imposition of the costs of either the current retrofit program or alternatives to it upon that segment of the population to be economically infeasible and therefore found mitigation measures to be infeasible under the California Environmental Quality Act and Board regulations.

CERTIFIED: Sally Rump
Sally Rump
Board Secretary

Date: 10/29/80

RECEIVED BY
Office of the Secretary
NOV 3 1980
Resources Agency of C-

State of California
AIR RESOURCES BOARD

Resolution 80-56

August 28, 1980

RECEIVED BY
Office of the Secretary

OCT 0 6 1980

Resources Agency of California

WHEREAS, Section 39601 of the Health and Safety Code authorizes the Air Resources Board to adopt standards, rules and regulations necessary for the proper execution of the powers and duties granted to and imposed upon the Board by law; and

WHEREAS, Section 43000(e) of the Health and Safety Code states that emission standards applied to new motor vehicles are standards with which all new motor vehicles shall comply; and

WHEREAS, Sections 43101 and 43104 of the Health and Safety Code authorize the Board to adopt vehicle emission standards and test procedures in order to control or eliminate air pollution caused by motor vehicles; and

WHEREAS, the federal Environmental Protection Agency (EPA) has adopted particulate emission standards for 1982 and subsequent model year diesel-fueled light-duty vehicles and light-duty trucks, which standards are applicable to vehicles sold in California; and

WHEREAS, the Board finds that control of particulate emissions is necessary to protect the public health and achieve federal and state ambient air quality standards; and

WHEREAS, the Board finds that insufficient information is now available to enable it to establish an independent California emission standard for particulate matter; and

WHEREAS, the California Environmental Quality Act and Board regulations require that no project having adverse environmental impacts be adopted as originally proposed if feasible alternatives or mitigation measures are available; and

WHEREAS, a public hearing and other administrative proceedings have been held in accordance with the provisions of the Administrative Procedure Act dealing with the agency adoption of emergency regulations;

NOW, THEREFORE, BE IT RESOLVED, that the Board amends Section 1960.1, Title 13, California Administrative Code, as set forth in Attachment A hereto.

BE IT FURTHER RESOLVED, that the Board hereby amends the "California Exhaust Emission Standards and Test Procedures for 1981 and Subsequent Model Passenger Cars, Light-Duty Trucks and Medium-Duty Vehicles" as set forth in Attachment B hereto.

Attachment B

State of California
AIR RESOURCES BOARD

Note: These procedures are printed in a style to indicate the adopted changes. New text is underlined and deleted portions are noted.

CALIFORNIA EXHAUST EMISSION STANDARDS AND TEST PROCEDURES FOR 1981 AND SUBSEQUENT MODEL PASSENGER CARS, LIGHT-DUTY TRUCKS, AND MEDIUM-DUTY VEHICLES

Adopted: November 23, 1976
Adopted: December 14, 1976
Amended: May 26, 1977
Amended: June 8, 1977
Amended: June 22, 1977
Amended: September 20, 1977
Amended: January 15, 1978
Amended: March 1, 1978
Amended: April 10, 1978
Amended: May 24, 1978
Amended: February 9, 1979
Amended: May 22, 1979
Amended: March 5, 1980
Amended: March 26, 1980
Amended: August 27, 1980
Amended: August 28, 1980

CALIFORNIA EXHAUST EMISSION STANDARDS AND TEST PROCEDURES FOR 1981 AND SUBSEQUENT MODEL PASSENGER CARS, LIGHT-DUTY TRUCKS AND MEDIUM-DUTY VEHICLES

The provisions of Subparts A and B, Part 86, Title 40, Code of Federal Regulations, as they existed on April 15, 1978, are hereby adopted as the California Exhaust Emission Standards and Test Procedures for 1981 and Subsequent Model Passenger Cars, Light-Duty Trucks and Medium-Duty Vehicles, with the following exceptions and additions:

1. Applicability

   a. These test procedures are applicable to 1981 and subsequent model passenger cars, light-duty trucks and medium-duty vehicles, except motorcycles. References to "light-duty trucks" in 40 CFR 86 shall apply both to "light-duty trucks" and "medium-duty vehicles" in these procedures.

   b. Any reference to vehicle sales throughout the United States shall mean vehicle sales in California.

   c. Regulations concerning EPA hearings, EPA inspections, specific language on the Certificate of Conformity, evaporative emissions, high-altitude vehicles and testing, and heavy-duty engines and vehicles shall not be applicable to these procedures, except where specifically noted.

2. Definitions

   a. "Administrator" means the Executive Officer of the Air Resources Board.

   b. "Certificate of Conformity" means Executive Order certifying vehicles for sale in California.

   c. "Certification" means certification as defined in Section 39018 of the Health and Safety Code.

   d. "Passenger car" means any motor vehicle designed primarily for transportation of persons and having a capacity of twelve persons or less.

e. "Heavy-duty engine" means an engine which is used to propel a heavy-duty vehicle.

f. "Heavy-duty vehicle" means any motor vehicle having a manufacturer's gross vehicle weight rating greater than 6,000 pounds, except passenger cars.

g. "Light-duty truck" means any motor vehicle, rated at 6,000 pounds gross vehicle weight or less, which is designed primarily for purposes of transportation of property or is a derivative of such a vehicle, or is available with special features enabling off-street or off-highway operation and use.

h. "Medium-duty vehicle" means any heavy-duty vehicle having a manufacturer's gross vehicle weight rating of 8500 pounds or less.

3. Test Procedures

a. In order to demonstrate compliance with a non-methane hydrocarbon emission standard, hydrocarbon emissions shall be measured in accordance with the "California Non-Methane Hydrocarbon Test Procedures."

b. Durability data submitted pursuant to subparagraph 86.078-23(f) may be from vehicles previously certified by EPA or ARB.

c. The requirements in subparagraph 86.078-28(a)(4)(i)(B) (durability vehicles must meet emission standards) refer, for each pollutant, to the highest of either the federal or California emission standards.

d. In paragraph 86.079-21 (Application for certification), amend subparagraph (b)(5) to read:

(5) A statement of maintenance and procedures consistent with the restrictions imposed under subparagraph 86.078-25(a)(1), necessary to assure that the vehicles (or engines) covered by a certificate of conformity in operation in normal use conform to the regulations, and a description of the program for training of personnel for such maintenance, and the equipment required.

e. In paragraph 86.078-25 (Maintenance):

1. Amend subparagraph (a)(1) to read as follows:

(1) Scheduled maintenance on the engine, emission control system and fuel system of durability vehicles shall, unless otherwise provided pursuant to paragraph (a)(5)(iii), be restricted as set forth in the following provisions.

(i)(A) for gasoline-fueled vehicles, maintenance shall be restricted to the inspection, replacement, cleaning, adjustment and/or service of the following items at intervals no more frequent than indicated:

(1) Drive belts on engine accessories (tension adjustment only); (30,000 miles).

(2) Valve lash (15,000 miles).

(3) Spark plugs (30,000 miles).

(4) Air filter (30,000 miles).

(5) Exhaust gas sensor (30,000 miles): Provided that an audible and/or visible signal approved by the Executive Officer alerts the vehicle operator to the need for sensor maintenance at the mileage point.

(6) Choke (cleaning or lubrication only); (30,000 miles).

(7) In addition, adjustment of the engine idle speed (curb idle and fast idle), valve lash, and engine bolt torque may be performed once during the first 5,000 miles of scheduled driving, provided the manufacturer makes a satisfactory showing that the maintenance will be performed on vehicles in use.

(B) for diesel-powered vehicles, maintenance shall be restricted to the following items at intervals no more frequent than every 12,500 miles of scheduled driving, provided that no maintenance may be performed after 45,000 miles of scheduled driving:

(1) Adjust low idle speed.

(2) Adjust valve lash if required.

(3) Adjust injector timing.

(4) Adjust governor.

(5) Clean and service injector tips.

(6) Adjust drive belt tension on engine accessories.

(7) Check engine bolt torque and tighten as required.

(ii) Change of engine and transmission oil, change or service of oil filter and, for diesel-powered vehicles only, change or service of fuel filter and air filter, will be allowed at the mileage intervals specified in the manufacturer's maintenance instructions.

(iii) Maintenance shall be conducted in a manner consistent with service instructions and specifications provided by the manufacturer for use by customer service personnel.

(2) Delete subparagraph (a)(3) (Service of exhaust gas recirculation system).

(3) Delete subparagraph (a)(4) (Service of catalytic converter).

f. In paragraph 86.078-38 (Maintenance instructions):

1. Amend subparagraph (a) to read:

(a) The manufacturer shall furnish or cause to be furnished to the purchaser of each new motor vehicle (or motor vehicle engine) subject to the standards prescribed in paragraphs 86.078-8 through 86.078-11 as applicable, written instructions for the maintenance and use of the vehicle (or engine) by the purchaser as may be reasonable and necessary to assure the proper functioning of emission control systems in normal use. Such instructions shall be consistent with and not require maintenance in excess of the restrictions imposed under subparagraph 86.078-25(a)(1), except that the instructions may, subject to approval by the Administrator, require additional maintenance for vehicles operated under extreme conditions. In addition, subject to approval by the Administrator, the instructions may require inspections necessary to insure safe operation of the vehicle in use.

In addition to any maintenance which may be required pursuant to the preceding paragraph, the instructions may also recommend such inspections, maintenance, and repair as may be reasonable and necessary for the proper functioning of the vehicle and its emission control systems. If the instructions recommend maintenance in addition to that which may be required pursuant to the preceding paragraph, they shall distinguish clearly between required and recommended maintenance.

2. Amend subparagraph (c)(1) to read:

(1) Such instructions shall specify the performance of all scheduled maintenance performed by the manufacturer under subparagraph 86.078-25(a)(1).

If the instructions specify recommended maintenance as well as required maintenance, they shall distinguish clearly between the two.

3. Amend subparagraph (d) by adding a new subparagraph (3) to read:

(3) Such instructions shall specify the performance of all scheduled maintenance performed by the manufacturer under subparagraph 86.078-25(a)(1).

If the instructions specify recommended maintenance as well as required maintenance, they shall distinguish clearly between the two.

g. Amend subparagraph 86.078-39(a) (Submission of maintenance instructions) to read:

(a) The manufacturer shall provide to the Administrator, no later than the time of the submission required by paragraph 86.078-23 a copy of the maintenance instructions which the manufacturer proposes to supply to the ultimate purchaser in accordance with subparagraph 86.078-38(a). The Administrator will review such instructions to determine whether they are consistent with federal requirements, and to determine whether the instructions for required maintenance are consistent with the restrictions imposed under subparagraph 86.078-25(a)(1). The Administrator will notify the manufacturer of his determinations.

4. Standards

The following standards represent the maximum projected exhaust emissions for the useful life of the vehicle.

Model Year	Vehicle Type (a)	Equivalent Inertia Weight (lbs.)(b)	Exhaust Emission Standards (grams per vehicle mile) Non-Methane Hydrocarbons(c)	Carbon Monoxide	Oxides of Nitrogen (NO_2)(e)
1981	PC	All	(0.41)	3.4	1.0
	PC(d)	All	0.39 (0.41)	7.0	0.7
	PC(g)	All	0.39 (0.41)	7.0	1.5
	LDT, MDV	0-3999	0.39 (0.41)	9.0	1.0
	LDT,MDV(h)	0-3999	0.39 (0.41)	9.0	1.5
	LDT, MDV	4000-5999	0.50 (0.50)	9.0	1.5
	MDV	6000&larger	0.60 (0.60)	9.0	2.0
1982	PC	All	0.39 (0.41)	7.0	0.4
	PC(d)	All	0.39 (0.41)	7.0	0.7
	PC(i)	All	0.39 (0.41)	7.0	1.0
	Diesel PC	All	0.39 (0.41)	7.0	1.2
	LDT, MDV	0-3999	0.39 (0.41)	9.0	1.0
	LDT, MDV	4000-5999	0.50 (0.50)	9.0	1.5
	LDT,MDV(h)	0-3999	0.39 (0.41)	9.0	1.5
	MDV	6000&larger	0.60 (0.60)	9.0	2.0
1983 & Sub-sequent	PC	All	0.39 (0.41)	7.0	0.4
	LDT, MDV	0-3999	0.39 (0.41)	9.0	0.4
	LDT, MDV	4000-5999	0.50 (0.50)	9.0	1.0
	MDV	6000&larger	0.60 (0.60)	9.0	1.5
1983(i)	PC	All	0.39 (0.41)	7.0	0.7
	LDT, MDV	0-3999	0.39 (0.41)	9.0	1.0(j)
1984(i)	PC	All	0.39 (0.41)	7.0	0.7
	LDT, MDV	0-3999	0.39 (0.41)	9.0	0.7
1985(i)	LDT, MDV	0-3999	0.39 (0.41)	9.0	0.7

Model Year	Vehicle Type (a)	Equivalent Inertia Weight (lbs.)(b)	100,000 Mile Exhaust Emission Standards (grams per vehicle mile) Non-Methane Hydrocarbons(c)	Carbon Monoxide	Oxides of Nitrogen NO_2(e)
1981	PC(Option 1)	All	0.39 (f)	3.4	1.5
	PC(Option 2)	All	0.46 (f)	4.0	1.5
	LDT, MDV (Option 1)	0-3999	0.39 (0.41) (f)	9.0	1.5
	LDT, MDV (Option 2)	0-3999	0.46 (f)	10.6	1.5
	LDT, MDV	4000-5999	0.50 (0.50) (f)	9.0	2.0
	MDV	6000+larger	0.60 (0.60) (f)	9.0	2.3
1982	PC(Option 1)	All	(0.41)	7.0	1.0 (k)
	PC(Option 2)	All	0.46	8.3	1.0 (k)
	LDT, MDV (Option 1)	0-3999	0.39 (0.41)	9.0	1.5
	LDT, MDV (Option 2)	0-3999	0.46	10.6	1.5
	LDT, MDV	4000-5999	0.50 (0.50)	9.0	2.0
	MDV	6000&larger	0.60 (0.60)	9.0	2.3
1983 & Sub-sequent	PC	All	0.39 (0.41)	7.0	1.0
	PC	All	0.46	8.3	1.0
	LDT, MDV (Option 1)	0-3999	0.39 (0.41)	9.0	1.0
	LDT, MDV (Option 2)	0-3999	0.46	10.6	1.0
	LDT, MDV	4000-5999	0.50 (0.50)	9.0	1.5
	MDV	6000&larger	0.60 (0.60)	9.0	2.0

(a) "PC" means passenger cars.
"LDT" means light-duty trucks.
"MDV" means medium-duty vehicles.

(b) Equivalent inertia weights are determined under subparagraph 86.129-79(a).

(c) Hydrocarbon standards in parentheses apply to total hydrocarbons.

(d) The second set of passenger car standards is optional. A manufacturer must select either the primary or optional sets of standards for its full product line for the entire two-year period.

(e) The maximum projected emissions of oxides of nitrogen measured on the federal Highway Fuel Economy Test (HWFET; 40 CFR Part 600, Subparagraph B) shall be no greater than 1.33 times the applicable passenger car standards and 2.0 times the applicable light-duty truck and medium-duty vehicle standards shown in the table. Both the projected emissions and the HWFET standard shall be rounded to the nearest 0.1 gm/mi before being compared.

(f) For vehicles from evaporative emissions families with projected 50,000 mile evaporative emissions values below 1.0 gm/test, an adjustment to the hydrocarbon exhaust emission standard may be granted by the Executive Officer. The adjusted standard will be calculated using the following formula:

$$HC_{ex} = .75\ (.185 - \frac{Di+3.3\ Hs}{29.4}\ ) + HC_o$$

Where:

HC_{ex} = adjusted exhaust hydrocarbon standard

HC_o = unadjusted exhaust hydrocarbon standard

Di = diurnal evaporative emissions
Hs = hot soak evaporative emissions.

(g) For vehicles certified to special standards authorized by Section 1960.2, Article 2, subchapter 1, Chapter 3, Title 13, California Administrative Code.

(h) For vehicles certified to special standards authorized by Section 1960.3, Article 2, subchapter 1, Chapter 3, Title 13, California Administrative Code.

(i) For vehicles certified to special standards authorized by Section 1960.4, Article 2, Subchapter 1, Chapter 3, Title 13, California Administrative Code. Special standards revert to "1983 and subsequent" standards for 1985 and subsequent passenger cars and 1986 and subsequent LDTs and MDVs.

(j) The Executive Officer may grant limited relief from the 1983 special NOx standard to a manufacturer who exceeds the standard because of unforseen technical problems.

(k) Optionally, for turbocharged diesels, the NOx standard is 1.5 grams per mile.

5. Additional Requirement

a. A statement must be supplied that the production vehicles shall be in all material respects the same as those for which certification is granted.

b. If a gasoline-fueled vehicle manufacturer requires the use of unleaded fuel, a statement will be required that the engine and transmission combinations for which certification is requested are designed to operate satisfactorily on a gasoline having a research octane number not greater than 91.

c. Labeling required pursuant to paragraph 86.079-35 and Section 1965, Chapter 3, Title 13 of the California Administrative Code shall conform with the requirements specified in the "California Motor Vehicle Tune-Up Label Specifications."

d. For gasoline-powered vehicles evidence shall be supplied that the air/fuel metering system or secondary air injection system is capable of providing sufficient oxygen to theoretically allow enough oxidation to attain the CO emission standard at barometric pressures equivalent to those expected at altitudes ranging from sea level to 6,000 feet elevation.

e. The mechanism for adjusting the idle air/fuel mixture, if any, shall be designed so that either:

(i) The mixture adjustment mechanism is not visible, even with the air cleaner removed, and special tools and/or procedures are required to make adjustments; or

(ii) in the alternative, the Executive Officer may, upon reasonable notice to the manufacturer, require that a certification test of a vehicle be conducted with the idle air/fuel mixture at any setting which the Executive Officer finds corresponds to settings likely to be encountered in actual use. The Executive Officer, in making this finding, shall consider the difficulty of making adjustments, damage to the carburetor in the event of any effort to make an improper adjustment, and the need to replace parts following the adjustment.

The manufacturer shall submit for approval by the Executive Officer his or her proposed method for compliance with this requirement in his or her preliminary application for certification.

f. The exhaust emissions shall be measured from all exhaust emission data vehicles tested in accordance with the federal Highway Fuel Economy Test (HWFET; 40 CFR Part 600 Subpart B). The oxides of nitrogen emissions measured during such tests shall be multiplied by the oxides of nitrogen deterioration factor computed in accordance with paragraph 86.078-28, and then rounded and compared with the standard as set forth in paragraph 4 above. All data obtained pursuant to this paragraph shall be reported in accordance with procedures applicable to other exhaust emissions data required pursuant to these procedures.

In the event that one or more of the manufacturer's emission data vehicles fail the HWFET standard listed in paragraph 4, the manufacturer may submit to the Executive Officer engineering data or other evidence showing that the system is capable of complying with the standard. If the Executive Officer finds, on the basis of an engineering evaluation, that the system can comply with the HWFET standard, he or she may accept the information supplied by the manufacturer in lieu of vehicle test data.

g. The manufacturer shall submit to the Executive Officer a statement that those vehicles for which certification is requested have driveability and performance characteristics which satisfy that manufacturer's customary driveability and performance requirements for vehicles sold in the United States. This statement shall be based on driveability data and other evidence showing compliance with the manufacturer's performance criteria. This statement shall be supplied with the manufacturer's final application for certification, and with all running changes for which emission testing is required.

If the Executive Officer has evidence to show that in-use vehicles demonstrate poor performance that could result in wide-spread tampering with the emission control systems, he or she may request all driveability data and other evidence used by the manufacturer to justify the performance statement.

6. Optional 100,000 Mile Certification Procedure

The alternate emission standards shown in paragraph (4) above shall apply to any engine family which meets all of the following additional requirements:

a. Each exhaust emission durability data vehicle shall be driven, with all emission control systems installed and operating, for 100,000 miles or such lesser distance as the Executive Officer may agree to as meeting the objectives of this procedure. Compliance with the emission standards shall be established as follows:

(i) The linear regression line for all pollutants shall be established by use of all required data from tests of the durability vehicle at every 5,000 mile intervals from 5,000 to 100,000 miles. The requirements in subparagraph 86.078-28(a)(4)(i)(B)(durability vehicles must meet emissions standards) refer, for each pollutant, to the highest of either the federal 50,000 mile or California 100,000 mile emission standards.

(ii) Compliance with the hydrocarbon and carbon monoxide standards shall be determined as follows:

(a) For Option 1:

(A) the interpolated 4,000 and 50,000 mile points on the linear regression line in (i) shall not exceed the appropriate hydrocarbon and carbon monoxide standards, except as in (B) below.

(B) the linear regression line in (i) may exceed the standard provided that no data point exceeds the standard.

(C) the hydrocarbon and carbon monoxide data from the 4,000 mile test point of the emission data vehicle shall be multiplied by the deterioration factor computed by dividing the interpolated 50,000 mile point by the interpolated 4,000 mile point. These values shall not exceed the appropriate hydrocarbon and carbon monoxide standards.

(b) For Option 2:

(A) the interpolated 4,000 and 100,000 mile points on the linear regression line in (i) shall not exceed the appropriate hydrocarbon and carbon monoxide standards, except as in (B) below.

(B) the linear regression line in (i) may exceed the standard provided that no data point exceeds the standard.

(C) the hydrocarbon and carbon monoxide data from the 4,000 mile test point of the emission data vehicle shall be multiplied by the deterioration factor computed by dividing the interpolated 100,000 mile point by the interpolated 4,000 mile point. These values shall not exceed the appropriate 100,000 mile hydrocarbon and carbon monoxide standards.

(iii) Compliance with the oxides of nitrogen standard for Options 1 and 2 shall be determined as follows:

(a) the interpolated 4,000 and 100,000 mile points on the linear regression line in (i) shall not exceed the appropriate 100,000 mile oxides of nitrogen standard except as in (b) below.

(b) the linear regression line in (i) may exceed the standard provided that no data point exceeds the standard.

(c) the oxides of nitrogen data from the 4,000 mile test point of the emission data vehicle shall be multiplied by the deterioration factor computed by dividing the interpolated 100,000 mile point by the interpolated 4,000 mile point. These values shall not exceed the appropriate 100,000 mile oxides of nitrogen standard.

All references in these test procedures to "useful life, " 5 years, and 50,000 miles shall mean "total life," 10 years, and 100,000 miles, respectively, except in subparagraph (ii).

b. Only the following scheduled maintenance shall be allowed under subparagraph 86.078.25(a)(1)(i).

25(a)(1)(i)(A) Option 1. For 1981 and later model gasoline or diesel-fueled vehicles, maintenance shall be restricted to the inspection, replacement, cleaning, adjustment, and/or service of the following items at intervals no more frequent than indicated.

(1) Drive belt tension on engine accessories (30,000 miles).
(2) Valve lash (15,000 miles).
(3) Spark plugs (30,000 miles).
(4) Air filter (30,000 miles).
(5) Exhaust gas sensor (30,000 miles); Provided that an audible and/or visible signal approved by the Executive Officer alerts the vehicle operator to the need for sensor maintenance.
(6) Choke, cleaning or lubrication only (30,000 miles).
(7) Idle speed (30,000 miles).
(8) Fuel Filter (30,000 miles).
(9) Injection timing (30,000 miles).

25(a)(1)(i)(B) Option 2. For 1981 and later model gasoline or diesel-fueled vehicles, maintenance shall be restricted to the inspection, replacement, cleaning, adjustment, and/or service of the following items at intervals no more frequent than indicated:

(1) Drive belt tension on engine accessories (30,000 miles).
(2) Valve lash (15,000 miles).
(3) Spark plugs (30,000 miles).
(4) Air filter (30,000 miles).
(5) Fuel filter (30,000 miles).
(6) Idle speed (30,000 miles).
(7) Injection timing (30,000 miles).

(iii) In addition, adjustment of the engine idle speed (curb idle and fast idle), valve lash, and engine bolt torque may be performed once during the first 5,000 miles of scheduled driving, provided the manufacturer makes a satisfactory showing that the maintenance will be performed on vehicles in use.

c. The manufacturer agrees to apply to vehicles certified under this paragraph the provisions of Section 43204 of the California Health and Safety Code for a period of ten year or 100,000 miles, whichever first occurs.

8. For all emission standards options, any vehicle which is subject to a standard set by federal law or regulation controlling emissions of particulate matter must conform to such standard.

State of California

Memorandum

To : Huey D. Johnson
Secretary
Resources Agency

Date : October 3, 1980

Subject : Filing of Notice of Decision of the Air Resources Board

From : **Air Resources Board**

Pursuant to Title 17, Section 60007(b), and in compliance with Air Resources Board certification under section 21080.5 of the Public Resources Code, the Air Resources Board hereby forwards for posting the attached notice of decision and response to environmental comments raised during the comment period.

Sally Rump

Sally Rump
BOARD SECRETARY

Attach: Resolution 80-53
Resolution 80-54
[redacted]

State of California
AIR RESOURCES BOARD

FINDING OF EMERGENCY

The Air Resources Board finds that an emergency exists and that the adoption of the attached amendments to Board regulations is necessary for the immediate preservation of the health and safety and general welfare. A statement of the facts concerning this emergency action follows:

1. A hearing to consider amendments to Title 13, California Administrative Code, regarding exhaust emission standards for oxides of nitrogen (NOx) from vehicles produced by small-volume manufacturers has been held commencing at 10:00 a.m., August 27, 1980, at the State Building, 107 So. Broadway, Los Angeles, California.

2. The amendments to the regulations are adopted under Health and Safety Code Sections 39600 and 39601 to implement Health and Safety Code Sections 43100 and 43101.

3. Under existing regulations, small-volume vehicle manufacturers are required, subject to limited exceptions required by federal law, to meet the same NOx emission standards as other manufacturers. The regulations adopted by the Board contain NOx certification standards which apply only to small-volume manufacturers.

4. Immediate action to amend Board regulations is needed to preserve the health and safety and general welfare in that small-volume manufacturers vehicle certification program for the 1982 model year must commence imminently if certification is to be completed in time for the introduction of 1982 model year vehicles. Small-volume manufacturers have demonstrated an inability to comply with the existing NOx emission standards for 1982 model years; hence amendment to those standards is required. These amendments must be adopted at this time to provide small-volume manufacturers enough time to take all the steps necessary to ensure timely compliance with the NOx emission standards for the 1982 model year. The failure to adopt NOx standards and assembly-line levels for small-volume manufacturers at this time would delay manufacturer's certification schedules for the 1982 model year and disrupt planning for subsequent years and would cause substantial economic harm to affected manufacturers, their distributors and dealers in California, and the public in general. Furthermore, the federal Environmental Protection Agency (EPA) is presently considering amending or vacating previously granted waivers of California's NOx emissions standards based on the inability of small-volume manufacturers to comply with the standards. Since the amendments adopted by the Board impose stricter NOx control requirements than would be in effect if these waivers were vacated, vacation of the waivers would result in an increase in levels of NOx and ozone and constitute a danger to the public health and safety.

State of California
AIR RESOURCES BOARD

Resolution 80-58

December 2, 1980

Agenda Item No.: 80-25-1

WHEREAS, Section 39601 of the Health and Safety Code authorizes the Air Resources Board to adopt standards, rules and regulations necessary for the proper execution of the powers and duties granted to and imposed upon the Board by law;

WHEREAS, Section 43210 of the Health and Safety Code requires that the Board adopt regulations which provide for the testing of new motor vehicles on factory assembly lines or in such manner as the Board determines best suited to carry out the purpose of Part 5 (commencing with Section 43000), Division 26, of the Health and Safety Code;

WHEREAS, Section 43000(e) of the Health and Safety Code states that emission standards applied to new motor vehicles are standards with which all new motor vehicles shall comply;

WHEREAS, the California Environmental Quality Act and Board regulations require that no project having adverse environmental impacts be adopted as originally proposed if feasible alternatives or mitigation measures are available;

WHEREAS, the Board finds that some small-volume manufacturers need additional lead time to meet certain exhaust emission standards;

WHEREAS, a federal court vacated the federal waiver of Section 209(b) for certain California standards to the extent that the waiver denied small manufacturers the lead time to which they were entitled pursuant to Section 202(b)(1)(B) of the Clean Air Act;

WHEREAS, the Board has allowed light-duty truck and medium-duty vehicle NOx standards for manufacturers to lag passenger car standards by one year to provide time to prove and transfer emission control technology;

WHEREAS, the Board finds that the standards in the proposed regulation, Section 1960.4, Title 13, California Administrative Code, are consistent with Sections 1960.2 and 1960.3 previously adopted by the Board;

WHEREAS, an emergency public hearing has been held in accordance with the provisions of the Administrative Procedure Act (Government Code, Title 2, Division 3, Part 1, Chapter 4.5); and

WHEREAS, a confirmatory public hearing and other administrative proceedings have been held in accordance with the provisions of the Administrative Procedure Act (Government Code, Title 2, Division 3, Part 1, Chapter 4.5);

NOW, THEREFORE BE IT RESOLVED, that the Board hereby confirms its adoption of Section 1960.4 in Article 2, Subchapter 1, Chapter 3, Title 13, California Administrative Code as set forth in Attachment A hereto.

BE IT FURTHER RESOLVED, that the Board hereby confirms amendments made to the "California Exhaust Emission Standards and Test Procedures for 1981 and Subsequent Model Passenger Cars, Light-Duty Trucks and Medium-Duty Vehicles" as set forth in Attachment B hereto.

BE IT FURTHER RESOLVED, that the Board hereby finds that its regulations in Sections 1960.4, Title 13, California Administrative Code, and related 1981 and subsequent year exhaust emission standards and test procedures are individually for each vehicle category, and, in the aggregate, at least as protective of public health and welfare as applicable federal regulations.

I certify that the above is a true and correct copy of Resolution 80-58, as adopted by the Air Resources Board.

Sally Rump

Sally Rump, Board Secretary

1960.4 Special Standards for 1982 and Subsequent Model Passenger Cars, and 1983 and Subsequent Model Light-Duty Trucks and Medium-Duty Vehicles, 0-3999 Pound Equivalent Inertia Weight

(a) 1982 Model Passenger Cars and 1983 Model Light-Duty Trucks and Medium-Duty Vehicles.

(1) The oxides of nitrogen emissions from each 1982 model Passenger Car and each 1983 model Light-Duty Truck and Medium-Duty Vehicle engine family and subgroup produced by a manufacturer subject to "in lieu" standards pursuant to Section 202(b)(1)(B) of the Clean Air Act as amended in 1977, shall not exceed a standard of 1.0 gram per vehicle mile.

(2) Notwithstanding any other provision of this Chapter, for any vehicle manufacturer subject to "in lieu" standards pursuant to Section 202(b)(1)(B) of the Clean Air Act as amended in 1977, the oxides of nitrogen emissions from 1982 model Passenger Cars; and, separately, 1983 model Light-Duty Trucks and Medium-Duty Vehicles, 0-3999 Pounds Equivalent Inertia Weight, shall not exceed an assembly line test level of 0.7 gram per vehicle mile as determined on a production average basis as measured by calendar quarter and evaluated on a cumulative basis.

(3) Joint ARB-manufacturer evaluations of production average data will be made each six months, starting with production test data accumulated through December 31, 1981, and appropriate relief will be made available to such manufacturer should unanticipated technical problems yield an inability to meet the required production average level.

(4) All definitions, standards, test procedures and other requirements of this Chapter not inconsistent with this section shall apply to all vehicles produced by such manufacturer for sale in California.

(b) 1983 Model Passenger Cars and 1984 Model Light-Duty Trucks and Medium-Duty Vehicles.

(1) The oxides of nitrogen emissions from each 1983 model Passenger Car and each 1984 model Light-Duty Truck and Medium-Duty Vehicle engine family and subgroup produced by a manufacturer subject to "in lieu" standards pursuant to Section 202(b)(1)(B) of the Clean Air Act as amended in 1977, shall not exceed a standard of 0.7 gram per vehicle mile. Appropriate relief will be made available to such manufacturer should unanticipated technical problems yield an inability to meet this standard.

(2) Notwithstanding any other provision of this Chapter, for any vehicle manufacturer subject to "in lieu" standards pursuant to Section 202(b)(1)(B) of the Clean Air Act as amended in 1977, the oxides of nitrogen emissions from 1983 model Passenger Cars; and, separately, 1984 model Light-Duty Trucks and Medium-Duty Vehicles, 0-3999 Pounds Equivalent Inertia Weight, shall not exceed an assembly line test level of 0.7 gram per vehicle mile as determined on a production average basis as measured by calendar quarter.

(3) Joint ARB-manufacturer evaluations of production average data will be made each six months, starting with production test data accumulated through December 31, 1982, and appropriate relief will be made available to such manufacturer should unanticipated technical problems yield an inability to meet the required production average level.

(4) All definitions, standards, test procedures and other requirements of this Chapter not inconsistent with this section shall apply to all vehicles produced by such manufacturer for sale in California.

(c) 1984 Model Passenger Cars and 1985 Model Light-Duty Trucks and Medium-Duty Vehicles.

(1) The oxides of nitrogen emissions from each 1984 model Passenger Car and each 1985 model Light-Duty Truck and Medium-Duty Vehicle engine family and subgroup produced by a manufacturer subject to "in lieu" standards pursuant to Section 202(b)(1)(B) of the Clean Air Act as amended in 1977, shall not exceed a standard of 0.7 gram per vehicle mile.

(2) Notwithstanding any other provision of this Chapter, for any vehicle manufacturer subject to "in lieu" standards pursuant to Section 202(b)(1)(B) of the Clean Air Act as amended in 1977, the oxides of nitrogen emissions from 1984 model Passenger Cars; and, separately, 1985 model Light-Duty Trucks and Medium-Duty Vehicles, 0-3999 Pounds Equivalent Inertia Weight, shall not exceed an assembly line test level of 0.7 gram per vehicle mile as determined on a production average basis as measured by calendar quarter.

(3) Joint ARB-manufacturer evaluation of production average data will be made each six months, starting with production test data accumulated through December 31, 1983, and appropriate relief will be made available to such manufacturer should unanticipated technical problems yield an inability to meet the required production average level.

(4) All definitions, standards, test procedures and other requirements of this Chapter not inconsistent with this section shall apply to all vehicles produced by such manufacturer for sale in California.

Attachment B

State of California
AIR RESOURCES BOARD

Note: These procedures are printed in a style to indicate the confirmed changes. New text is underlined and deleted portions are noted.

CALIFORNIA EXHAUST EMISSION STANDARDS AND TEST PROCEDURES FOR 1981 AND SUBSEQUENT MODEL PASSENGER CARS, LIGHT-DUTY TRUCKS, AND MEDIUM-DUTY VEHICLES

Adopted: November 23, 1976
Adopted: December 14, 1976
Amended: May 26, 1977
Amended: June 8, 1977
Amended: June 22, 1977
Amended: September 20, 1977
Amended: January 15, 1978
Amended: March 1, 1978
Amended: April 10, 1978
Amended: May 24, 1978
Amended: February 9, 1979
Amended: May 22, 1979
Amended: March 5, 1980
Amended: March 26, 1980
Amended: August 27, 1980
Amended: August 28, 1980
Amended: December 2, 1980

CALIFORNIA EXHAUST EMISSION STANDARDS AND TEST PROCEDURES FOR 1981 AND SUBSEQUENT MODEL PASSENGER CARS, LIGHT-DUTY TRUCKS AND MEDIUM-DUTY VEHICLES

The provisions of Subparts A and B, Part 86, Title 40, Code of Federal Regulations, as they existed on April 15, 1978, are hereby adopted as the California Exhaust Emission Standards and Test Procedures for 1981 and Subsequent Model Passenger Cars, Light-Duty Trucks and Medium-Duty Vehicles, with the following exceptions and additions:

1. Applicability

   a. These test procedures are applicable to 1981 and subsequent model passenger cars, light-duty trucks and medium-duty vehicles, except motorcycles. References to "light-duty trucks" in 40 CFR 86 shall apply both to "light-duty trucks" and "medium-duty vehicles" in these procedures.

   b. Any reference to vehicle sales throughout the United States shall mean vehicle sales in California.

   c. Regulations concerning EPA hearings, EPA inspections, specific language on the Certificate of Conformity, evaporative emissions, high-altitude vehicles and testing, and heavy-duty engines and vehicles shall not be applicable to these procedures, except where specifically noted.

2. Definitions

   a. "Administrator" means the Executive Officer of the Air Resources Board.

   b. "Certificate of Conformity" means Executive Order certifying vehicles for sale in California.

   c. "Certification" means certification as defined in Section 39018 of the Health and Safety Code.

   d. "Passenger car" means any motor vehicle designed primarily for transportation of persons and having a capacity of twelve persons or less.

e. "Heavy-duty engine" means an engine which is used to propel a heavy-duty vehicle.

f. "Heavy-duty vehicle" means any motor vehicle having a manufacturer's gross vehicle weight rating greater than 6,000 pounds, except passenger cars.

g. "Light-duty truck" means any motor vehicle, rated at 6,000 pounds gross vehicle weight or less, which is designed primarily for purposes of transportation of property or is a derivative of such a vehicle, or is available with special features enabling off-street or off-highway operation and use.

h. "Medium-duty vehicle" means any heavy-duty vehicle having a manufacturer's gross vehicle weight rating of 8500 pounds or less.

3. Test Procedures

a. In order to demonstrate compliance with a non-methane hydrocarbon emission standard, hydrocarbon emissions shall be measured in accordance with the "California Non-Methane Hydrocarbon Test Procedures."

b. Durability data submitted pursuant to subparagraph 86.078-23(f) may be from vehicles previously certified by EPA or ARB.

c. The requirements in subparagraph 86.078-28(a)(4)(i)(B) (durability vehicles must meet emission standards) refer, for each pollutant, to the highest of either the federal or California emission standards.

d. In paragraph 86.079-21 (Application for certification), amend subparagraph (b)(5) to read:

(5) A statement of maintenance and procedures consistent with the restrictions imposed under subparagraph 86.078-25(a)(1), necessary to assure that the vehicles (or engines) covered by a certificate of conformity in operation in normal use conform to the regulations, and a description of the program for training of personnel for such maintenance, and the equipment required.

e. In paragraph 86.078-25 (Maintenance):

1. Amend subparagraph (a)(1) to read as follows:

(1) Scheduled maintenance on the engine, emission control system and fuel system of durability vehicles shall, unless otherwise provided pursuant to paragraph (a)(5)(iii), be restricted as set forth in the following provisions.

(i)(A) for gasoline-fueled vehicles, maintenance shall be restricted to the inspection, replacement, cleaning, adjustment and/or service of the following items at intervals no more frequent than indicated:

(1) Drive belts on engine accessories (tension adjustment only); (30,000 miles).

(2) Valve lash (15,000 miles).

(3) Spark plugs (30,000 miles).

(4) Air filter (30,000 miles).

(5) Exhaust gas sensor (30,000 miles): Provided that an audible and/or visible signal approved by the Executive Officer alerts the vehicle operator to the need for sensor maintenance at the mileage point.

(6) Choke (cleaning or lubrication only); (30,000 miles).

(7) In addition, adjustment of the engine idle speed (curb idle and fast idle), valve lash, and engine bolt torque may be performed once during the first 5,000 miles of scheduled driving, provided the manufacturer makes a satisfactory showing that the maintenance will be performed on vehicles in use.

(B) for diesel-powered vehicles, maintenance shall be restricted to the following items at intervals no more frequent than every 12,500 miles of scheduled driving, provided that no maintenance may be performed after 45,000 miles of scheduled driving:

(1) Adjust low idle speed.

(2) Adjust valve lash if required.

(3) Adjust injector timing.

(4) Adjust governor.

(5) Clean and service injector tips.

(6) Adjust drive belt tension on engine accessories.

(7) Check engine bolt torque and tighten as required.

(ii) Change of engine and transmission oil, change or service of oil filter and, for diesel-powered vehicles only, change or service of fuel filter and air filter, will be allowed at the mileage intervals specified in the manufacturer's maintenance instructions.

(iii) Maintenance shall be conducted in a manner consistent with service instructions and specifications provided by the manufacturer for use by customer service personnel.

(2) Delete subparagraph (a)(3) (Service of exhaust gas recirculation system).

(3) Delete subparagraph (a)(4) (Service of catalytic converter).

f. In paragraph 86.078-38 (Maintenance instructions):

1. Amend subparagraph (a) to read:

(a) The manufacturer shall furnish or cause to be furnished to the purchaser of each new motor vehicle (or motor vehicle engine) subject to the standards prescribed in paragraphs 86.078-8 through 86.078-11 as applicable, written instructions for the maintenance and use of the vehicle (or engine) by the purchaser as may be reasonable and necessary to assure the proper functioning of emission control systems in normal use. Such instructions shall be consistent with and not require maintenance in excess of the restrictions imposed under subparagraph 86.078-25(a)(1), except that the instructions may, subject to approval by the Administrator, require additional maintenance for vehicles operated under extreme conditions. In addition, subject to approval by the Administrator, the instructions may require inspections necessary to insure safe operation of the vehicle in use.

In addition to any maintenance which may be required pursuant to the preceding paragraph, the instructions may also recommend such inspections, maintenance, and repair as may be reasonable and necessary for the proper functioning of the vehicle and its emission control systems. If the instructions recommend maintenance in addition to that which may be required pursuant to the preceding paragraph, they shall distinguish clearly between required and recommended maintenance.

2. Amend subparagraph (c)(1) to read:

(1) Such instructions shall specify the performance of all scheduled maintenance performed by the manufacturer under subparagraph 86.078-25(a)(1).

If the instructions specify recommended maintenance as well as required maintenance, they shall distinguish clearly between the two.

3. Amend subparagraph (d) by adding a new subparagraph (3) to read:

(3) Such instructions shall specify the performance of all scheduled maintenance performed by the manufacturer under subparagraph 86.078-25(a)(1).

If the instructions specify recommended maintenance as well as required maintenance, they shall distinguish clearly between the two.

g. Amend subparagraph 86.078-39(a) (Submission of maintenance instructions) to read:

(a) The manufacturer shall provide to the Administrator, no later than the time of the submission required by paragraph 86.078-23 a copy of the maintenance instructions which the manufacturer proposes to supply to the ultimate purchaser in accordance with subparagraph 86.078-38(a). The Administrator will review such instructions to determine whether they are consistent with federal requirements, and to determine whether the instructions for required maintenance are consistent with the restrictions imposed under subparagraph 86.078-25(a)(1). The Administrator will notify the manufacturer of his determinations.

4. Standards

The following standards represent the maximum projected exhaust emissions for the useful life of the vehicle.

Model Year	Vehicle Type (a)	Equivalent Inertia Weight (lbs.)(b)	Exhaust Emission Standards (grams per vehicle mile) Non-Methane Hydrocarbons(c)	Carbon Monoxide	Oxides of Nitrogen (NO_2)(e)
1981	PC	All	(0.41)	3.4	1.0
	PC(d)	All	0.39 (0.41)	7.0	0.7
	PC(g)	All	0.39 (0.41)	7.0	1.5
	LDT, MDV	0-3999	0.39 (0.41)	9.0	1.0
	LDT,MDV(h)	0-3999	0.39 (0.41)	9.0	1.5
	LDT, MDV	4000-5999	0.50 (0.50)	9.0	1.5
	MDV	6000&larger	0.60 (0.60)	9.0	2.0
1982	PC	All	0.39 (0.41)	7.0	0.4
	PC(d)	All	0.39 (0.41)	7.0	0.7
	PC(i)	All	0.39 (0.41)	7.0	1.0
	Diesel PC	All	0.39 (0.41)	7.0	1.2
	LDT, MDV	0-3999	0.39 (0.41)	9.0	1.0
	LDT, MDV	4000-5999	0.50 (0.50)	9.0	1.5
	LDT,MDV(h)	0-3999	0.39 (0.41)	9.0	1.5
	MDV	6000&larger	0.60 (0.60)	9.0	2.0
1983 & Sub-sequent	PC	All	0.39 (0.41)	7.0	0.4
	LDT, MDV	0-3999	0.39 (0.41)	9.0	0.4
	LDT, MDV	4000-5999	0.50 (0.50)	9.0	1.0
	MDV	6000&larger	0.60 (0.60)	9.0	1.5
1983(i)	PC	All	0.39 (0.41)	7.0	0.7(j)
	LDT, MDV	0-3999	0.39 (0.41)	9.0	1.0
1984(i)	PC	All	0.39 (0.41)	7.0	0.7
	LDT, MDV	0-3999	0.39 (0.41)	9.0	0.7(j)
1985(i)	LDT, MDV	0-3999	0.39 (0.41)	9.0	0.7

Model Year	Vehicle Type (a)	Equivalent Inertia Weight (lbs.)(b)	100,000 Mile Exhaust Emission Standards (grams per vehicle mile) Non-Methane Hydrocarbons(c)	Carbon Monoxide	Oxides of Nitrogen NO_2(e)
1981	PC(Option 1)	All	0.39 (f)	3.4	1.5
	PC(Option 2)	All	0.46 (f)	4.0	1.5
	LDT, MDV (Option 1)	0-3999	0.39 (0.41) (f)	9.0	1.5
	LDT, MDV (Option 2)	0-3999	0.46 (f)	10.6	1.5
	LDT, MDV	4000-5999	0.50 (0.50) (f)	9.0	2.0
	MDV	6000+larger	0.60 (0.60) (f)	9.0	2.3
1982	PC(Option 1)	All	(0.41)	7.0	1.0 (k)
	PC(Option 2)	All	0.46	8.3	1.0 (k)
	LDT, MDV (Option 1)	0-3999	0.39 (0.41)	9.0	1.5
	LDT, MDV (Option 2)	0-3999	0.46	10.6	1.5
	LDT, MDV	4000-5999	0.50 (0.50)	9.0	2.0
	MDV	6000&larger	0.60 (0.60)	9.0	2.3
1983 & Sub-sequent	PC	All	0.39 (0.41)	7.0	1.0
	PC	All	0.46	8.3	1.0
	LDT, MDV (Option 1)	0-3999	0.39 (0.41)	9.0	1.0
	LDT, MDV (Option 2)	0-3999	0.46	10.6	1.0
	LDT, MDV	4000-5999	0.50 (0.50)	9.0	1.5
	MDV	6000&larger	0.60 (0.60)	9.0	2.0

(a) "PC" means passenger cars.
"LDT" means light-duty trucks.
"MDV" means medium-duty vehicles.

(b) Equivalent inertia weights are determined under subparagraph 86.129-79(a).

(c) Hydrocarbon standards in parentheses apply to total hydrocarbons.

(d) The second set of passenger car standards is optional. A manufacturer must select either the primary or optional sets of standards for its full product line for the entire two-year period.

(e) The maximum projected emissions of oxides of nitrogen measured on the federal Highway Fuel Economy Test (HWFET; 40 CFR Part 600, Subparagraph B) shall be no greater than 1.33 times the applicable passenger car standards and 2.0 times the applicable light-duty truck and medium-duty vehicle standards shown in the table. Both the projected emissions and the HWFET standard shall be rounded to the nearest 0.1 gm/mi before being compared.

(f) For vehicles from evaporative emissions families with projected 50,000 mile evaporative emissions values below 1.0 gm/test, an adjustment to the hydrocarbon exhaust emission standard may be granted by the Executive Officer. The adjusted standard will be calculated using the following formula:

$$HC_{ex} = .75\ (.185 - \frac{Di+3.3\ Hs}{29.4}\ ) + HC_o$$

Where:

HC_{ex} = adjusted exhaust hydrocarbon standard

HC_o = unadjusted exhaust hydrocarbon standard

Di = diurnal evaporative emissions
Hs = hot soak evaporative emissions.

(g) For vehicles certified to special standards authorized by Section 1960.2, Article 2, subchapter 1, Chapter 3, Title 13, California Administrative Code.

(h) For vehicles certified to special standards authorized by Section 1960.3, Article 2, subchapter 1, Chapter 3, Title 13, California Administrative Code.

(i) For vehicles certified to special standards authorized by Section 1960.4, Article 2, Subchapter 1, Chapter 3, Title 13, California Administrative Code. Special standards revert to "1983 and subsequent" standards for 1985 and subsequent passenger cars and 1986 and subsequent LDTs and MDVs.

(j) The Executive Officer may grant limited relief from the 1983 passenger car and 1984 LDT and MDV special NOx standard to a manufacturer who exceeds the standard because of unforeseen technical problems.

(k) Optionally, for turbocharged diesels, the NOx standard is 1.5 grams per mile.

5. Additional Requirement

a. A statement must be supplied that the production vehicles shall be in all material respects the same as those for which certification is granted.

b. If a gasoline-fueled vehicle manufacturer requires the use of unleaded fuel, a statement will be required that the engine and transmission combinations for which certification is requested are designed to operate satisfactorily on a gasoline having a research octane number not greater than 91.

c. Labeling required pursuant to paragraph 86.079-35 and Section 1965, Chapter 3, Title 13 of the California Administrative Code shall conform with the requirements specified in the "California Motor Vehicle Tune-Up Label Specifications."

d. For gasoline-powered vehicles evidence shall be supplied that the air/fuel metering system or secondary air injection system is capable of providing sufficient oxygen to theoretically allow enough oxidation to attain the CO emission standard at barometric pressures equivalent to those expected at altidues ranging from sea level to 6,000 feet elevation.

e. The mechanism for adjusting the idle air/fuel mixture, if any, shall be designed so that either:

(i) The mixture adjustment mechanism is not visible, even with the air cleaner removed, and special tools and/or procedures are required to make adjustments; or

(ii) in the alternative, the Executive Officer may, upon reasonable notice to the manufacturer, require that a certification test of a vehicle be conducted with the idle air/fuel mixture at any setting which the Executive Officer finds corresponds to settings likely to be encountered in actual use. The Executive Officer, in making this finding, shall consider the difficulty of making adjustments, damage to the carburetor in the event of any effort to make an improper adjustment, and the need to replace parts following the adjustment.

The manufacturer shall submit for approval by the Executive Officer his or her proposed method for compliance with this requirement in his or her preliminary application for certification.

f. The exhaust emissions shall be measured from all exhaust emission data vehicles tested in accordance with the federal Highway Fuel Economy Test (HWFET; 40 CFR Part 600 Subpart B). The oxides of nitrogen emissions measured during such tests shall be multiplied by the oxides of nitrogen deterioration factor computed in accordance with paragraph 86.078-28, and then rounded and compared with the standard as set forth in paragraph 4 above. All data obtained pursuant to this paragraph shall be reported in accordance with procedures applicable to other exhaust emissions data required pursuant to these procedures.

In the event that one or more of the manufacturer's emission data vehicles fail the HWFET standard listed in paragraph 4, the manufacturer may submit to the Executive Officer engineering data or other evidence showing that the system is capable of complying with the standard. If the Executive Officer finds, on the basis of an engineering evaluation, that the system can comply with the HWFET standard, he or she may accept the information supplied by the manufacturer in lieu of vehicle test data.

g. The manufacturer shall submit to the Executive Officer a statement that those vehicles for which certification is requested have driveability and performance characteristics which satisfy that manufacturer's customary driveability and performance requirements for vehicles sold in the United States. This statement shall be based on driveability data and other evidence showing compliance with the manufacturer's performance criteria. This statement shall be supplied with the manufacturer's final application for certification, and with all running changes for which emission testing is required.

If the Executive Officer has evidence to show that in-use vehicles demonstrate poor performance that could result in wide-spread tampering with the emission control systems, he or she may request all driveability data and other evidence used by the manufacturer to justify the performance statement.

6. Optional 100,000 Mile Certification Procedure

The alternate emission standards shown in paragraph (4) above shall apply to any engine family which meets all of the following additional requirements:

a. Each exhaust emission durability data vehicle shall be driven, with all emission control systems installed and operating, for 100,000 miles or such lesser distance as the Executive Officer may agree to as meeting the objectives of this procedure. Compliance with the emission standards shall be established as follows:

(i) The linear regression line for all pollutants shall be established by use of all required data from tests of the durability vehicle at every 5,000 mile intervals from 5,000 to 100,000 miles. The requirements in subparagraph 86.078-28(a)(4)(i)(B)(durability vehicles must meet emissions standards) refer, for each pollutant, to the highest of either the federal 50,000 mile or California 100,000 mile emission standards.

(ii) Compliance with the hydrocarbon and carbon monoxide standards shall be determined as follows:

(a) For Option 1:

(A) the interpolated 4,000 and 50,000 mile points on the linear regression line in (i) shall not exceed the appropriate hydrocarbon and carbon monoxide standards, except as in (B) below.

(B) the linear regression line in (i) may exceed the standard provided that no data point exceeds the standard.

(C) the hydrocarbon and carbon monoxide data from the 4,000 mile test point of the emission data vehicle shall be multiplied by the deterioration factor computed by dividing the interpolated 50,000 mile point by the interpolated 4,000 mile point. These values shall not exceed the appropriate hydrocarbon and carbon monoxide standards.

(b) For Option 2:

(A) the interpolated 4,000 and 100,000 mile points on the linear regression line in (i) shall not exceed the appropriate hydrocarbon and carbon monoxide standards, except as in (B) below.

(B) the linear regression line in (i) may exceed the standard provided that no data point exceeds the standard.

(C) the hydrocarbon and carbon monoxide data from the 4,000 mile test point of the emission data vehicle shall be multiplied by the deterioration factor computed by dividing the interpolated 100,000 mile point by the interpolated 4,000 mile point. These values shall not exceed the appropriate 100,000 mile hydrocarbon and carbon monoxide standards.

(iii) Compliance with the oxides of nitrogen standard for Options 1 and 2 shall be determined as follows:

(a) the interpolated 4,000 and 100,000 mile points on the linear regression line in (i) shall not exceed the appropriate 100,000 mile oxides of nitrogen standard except as in (b) below.

(b) the linear regression line in (i) may exceed the standard provided that no data point exceeds the standard.

(c) the oxides of nitrogen data from the 4,000 mile test point of the emission data vehicle shall be multiplied by the deterioration factor computed by dividing the interpolated 100,000 mile point by the interpolated 4,000 mile point. These values shall not exceed the appropriate 100,000 mile oxides of nitrogen standard.

All references in these test procedures to "useful life, " 5 years, and 50,000 miles shall mean "total life," 10 years, and 100,000 miles, respectively, except in subparagraph (ii).

b. Only the following scheduled maintenance shall be allowed under subparagraph 86.078.25(a)(1)(i).

25(a)(1)(i)(A) Option 1. For 1981 and later model gasoline or diesel-fueled vehicles, maintenance shall be restricted to the inspection, replacement, cleaning, adjustment, and/or service of the following items at intervals no more frequent than indicated.

(1) Drive belt tension on engine accessories (30,000 miles).
(2) Valve lash (15,000 miles).
(3) Spark plugs (30,000 miles).
(4) Air filter (30,000 miles).
(5) Exhaust gas sensor (30,000 miles); Provided that an audible and/or visible signal approved by the Executive Officer alerts the vehicle operator to the need for sensor maintenance.
(6) Choke, cleaning or lubrication only (30,000 miles).
(7) Idle speed (30,000 miles).
(8) Fuel Filter (30,000 miles).
(9) Injection timing (30,000 miles).

25(a)(1)(i)(B) Option 2. For 1981 and later model gasoline or diesel-fueled vehicles, maintenance shall be restricted to the inspection, replacement, cleaning, adjustment, and/or service of the following items at intervals no more frequent than indicated:

(1) Drive belt tension on engine accessories (30,000 miles).
(2) Valve lash (15,000 miles).
(3) Spark plugs (30,000 miles).
(4) Air filter (30,000 miles).
(5) Fuel filter (30,000 miles).
(6) Idle speed (30,000 miles).
(7) Injection timing (30,000 miles).

(iii) In addition, adjustment of the engine idle speed (curb idle and fast idle), valve lash, and engine bolt torque may be performed once during the first 5,000 miles of scheduled driving, provided the manufacturer makes a satisfactory showing that the maintenance will be performed on vehicles in use.

c. The manufacturer agrees to apply to vehicles certified under this paragraph the provisions of Section 43204 of the California Health and Safety Code for a period of ten year or 100,000 miles, whichever first occurs.

8. For all emission standards options, any vehicle which is subject to a standard set by federal law or regulation controlling emissions of particulate matter must conform to such standard.

State of California
AIR RESOURCES BOARD

Response to Significant Environmental Issues

Item: Public Hearing to Consider Confirmation of Emergency Adoption of Section 1960.4, Title 13, California Administrative Code, Regarding Special NOx Standards for Small-Volume Manufacturers

Agenda Item No: 80-25-1

Public Hearing Date: December 2, 1980

Response Date: December 2, 1980

Issuing Authority: Air Resources Board

Comment: No comments were received identifying any significant environmental issues pertaining to this item. The staff report also identified no significant adverse effects.

Response: N/A

CERTIFIED: Sally Rump
Board Secretary

Date: 12/23/80

RECEIVED BY
Office of the Secretary

DEC 30 1980

Resources Agency of California

State of California

Memorandum

To : Huey D. Johnson
Secretary
Resources Agency
1416 - 9th Street
Sacramento, CA 95814

Date : December 29, 1980

Subject : Filing of Notice of Decision of the Air Resources Board

From : Air Resources Board

Pursuant to Title 17, Section 60007(b), and in compliance with Air Resources Board certification under section 21080.5 of the Public Resources Code, the Air Resources Board hereby forwards for posting the attached notice of decision and response to environmental comments raised during the comment period.

Sally Rump
BOARD SECRETARY

att: [redacted]
Resolution 80-59
Resolution 80-60

RECEIVED BY
Office of the Secretary

DEC 30 1980

Resources Agency of California

State of California
AIR RESOURCES BOARD

Resolution 80-58

December 2, 1980

Agenda Item No.: 80-25-1

WHEREAS, Section 39601 of the Health and Safety Code authorizes the Air Resources Board to adopt standards, rules and regulations necessary for the proper execution of the powers and duties granted to and imposed upon the Board by law;

WHEREAS, Section 43210 of the Health and Safety Code requires that the Board adopt regulations which provide for the testing of new motor vehicles on factory assembly lines or in such manner as the Board determines best suited to carry out the purpose of Part 5 (commencing with Section 43000), Division 26, of the Health and Safety Code;

WHEREAS, Section 43000(e) of the Health and Safety Code states that emission standards applied to new motor vehicles are standards with which all new motor vehicles shall comply;

WHEREAS, the California Environmental Quality Act and Board regulations require that no project having adverse environmental impacts be adopted as originally proposed if feasible alternatives or mitigation measures are available;

WHEREAS, the Board finds that some small-volume manufacturers need additional lead time to meet certain exhaust emission standards;

WHEREAS, a federal court vacated the federal waiver of Section 209(b) for certain California standards to the extent that the waiver denied small manufacturers the lead time to which they were entitled pursuant to Section 202(b)(1)(B) of the Clean Air Act;

WHEREAS, the Board has allowed light-duty truck and medium-duty vehicle NOx standards for manufacturers to lag passenger car standards by one year to provide time to prove and transfer emission control technology;

WHEREAS, the Board finds that the standards in the proposed regulation, Section 1960.4, Title 13, California Administrative Code, are consistent with Sections 1960.2 and 1960.3 previously adopted by the Board;

RECEIVED BY
Office of the Secretary

DEC 30 1980

Resources Agency of California

State of California
AIR RESOURCES BOARD

Resolution 80-59

December 2, 1980

Agenda Item No. 80-25-2

WHEREAS, Section 39601 of the Health and Safety Code authorizes the Air Resources Board to adopt standards, rules, and regulations necessary for the proper execution of the powers and duties granted to and imposed upon the Board by law; and

WHEREAS, Section 43000(e) of the Health and Safety Code states that emission standards applied to new motor vehicles are standards with which all new motor vehicles shall comply; and

WHEREAS, Sections 43101 and 43104 of the Health and Safety Code authorize the Board to adopt vehicle emission standards and test procedures in order to control or eliminate air pollution caused by motor vehicles; and

WHEREAS, manufacturers of diesel-fueled passenger cars have petitioned the Board to consider amending the 100,000 mile 1.0 gram per mile oxides of nitrogen (NOx) standard for 1982 based upon their asserted lack of technological capability to meet the standard; and

WHEREAS, the Board finds that manufacturers are making and have made a good faith effort to meet the 1.2 gpm NOx standard; and

WHEREAS, the Board finds that there are technological problems associated with diesel passenger cars meeting a NOx standard of 1.0 gram per mile in model year 1982; and

WHEREAS, the Board finds that in model year 1982, a NOx emission standard of 1.5 grams per mile for a useful vehicle life of 100,000 miles is technologically feasible for diesel passenger cars; and

WHEREAS, the Board confirms its previous finding that in model year 1983, a NOx emission standard of 1.0 gram per mile for a useful vehicle life of 100,000 miles is technologically feasible for all light-duty diesel vehicles; and

WHEREAS, the California Environmental Quality Act and Board regulations require that no project having adverse environmental impacts be adopted as originally proposed if feasible alternatives or mitigation measures are available; and

WHEREAS, the Board finds that an available measure to mitigate the air quality impacts of adopting NOx standards listed above is to eliminate the current hydrocarbon correction factor found in 13 California Administrative Code Section 1960.1(a); and

WHEREAS, an emergency public hearing has been held in accordance with the provisions of the Administrative Procedure Act (Government Code, Title 2, Division 3, Part 1, Chapter 4.5); and

WHEREAS, a public hearing and other administrative proceedings have been held in accordance with the provisions of the Administrative Procedure Act;

NOW, THEREFORE, BE IT RESOLVED, that the Board hereby amends Section 1960.1, Title 13, California Administrative Code, as set forth in Attachment A hereto.

BE IT FURTHER RESOLVED, that the Board hereby amends the "California Exhaust Emission Standards and Test Procedures for 1981 and Subsequent Model Passenger Cars, Light-Duty Trucks and Medium-Duty Vehicles" as set forth in Attachment B hereto.

BE IT FURTHER RESOLVED, that the Board hereby determines that the exhaust emission standards and test procedures adopted herein are, considered together with other vehicle emissions standards and test procedures found in Title 13 and adopted by the Board in Resolution 80-56, in the aggregate, at least as protective of public health and welfare as applicable federal standards.

I certify that the above is a true and correct copy of Resolution 80-59, as adopted by the Air Resources Board.

Sally Rump

Sally Rump, Board Secretary

EXHAUST EMISSION STANDARDS
(grams per mile)

Model-Year	Vehicle Type (1)	Equivalent Inertia Weight (lbs.) (2)	Non-Methane Hydrocarbons (3)	Carbon Monoxide	Oxides of Nitrogen (NO_2) (5)
1981	PC	All	(0.41)	3.4	1.0
	PC(4)	All	0.39 (0.41)	7.0	0.7
	LDT,MDV	0-3999	0.39 (0.41)	9.0	1.0
	LDT,MDV	4000-5999	0.50 (0.50)	9.0	1.5
	MDV	6000 & larger	0.60 (0.60)	9.0	2.0
1982	PC	All	0.39 (0.41)	7.0	0.4
	PC(4)	All	0.39 (0.41)	7.0	0.7
	LDT,MDV	0-3999	0.39 (0.41)	9.0	1.0
	LDT,MDV	4000-5999	0.50 (0.50)	9.0	1.5
	MDV	6000 & larger	0.60 (0.60)	9.0	2.0
1983 & Subsequent	PC	All	0.39 (0.41)	7.0	0.4
	LDT,MDV	0-3999	0.39 (0.41)	9.0	0.4
	LDT,MDV	4000-5999	0.50 (0.50)	9.0	1.0
	MDV	6000 & larger	0.60 (0.60)	9.0	1.5

100,000 MILE EXHAUST EMISSION STANDARDS
(grams per mile)

Model-Year	Vehicle Type (1)	Equivalent Inertia Weight (lbs.) (2)	Non-Methane Hydrocarbons (3)	Carbon Monoxide	Oxides of Nitrogen (NO_2) (5)
1981	PC (Option 1)	All	0.39 (6)	3.4	1.5
	PC (Option 2)	All	0.46 (6)	4.0	1.5
	LDT,MDV (Option 1)	0-3999	0.39 (0.41) (6)	9.0	1.5
	LDT,MDV (Option 2)	0-3999	0.46 (6)	10.6	1.5
	LDT,MDV	4000-5999	0.50 (0.50) (6)	9.0	2.0
	MDV	6000 & larger	0.60 (0.60) (6)	9.0	2.3
1982	PC (Option 1)	All	(0.41)	7.0	1.5
	PC (Option 2)	All	0.46	8.3	1.5
	LDT, MDV (Option 1)	0-3999	0.39 (0.41)	9.0	1.5
	LDT, MDV (Option 2)	0-3999	0.46	10.6	1.5
	LDT,MDV	4000-5999	0.50 (0.50)	9.0	2.0
	MDV	6000 & larger	0.60 (0.60)	9.0	2.3
1983 & Subsequent	PC	All	0.39 (0.41)	7.0	1.0
	PC	All	0.46	8.3	1.0
	LDT,MDV (Option 1)	0-3999	0.39 (0.41)	9.0	1.0
	LDT,MDV (Option 2)	0-3999	0.46	10.6	1.0
	LDT,MDV	4000-5999	0.50 (0.50)	9.0	1.5
	MDV	6000 & larger	0.60 (0.60)	9.0	2.0

(1) "PC" means passenger cars.
"LDT" means light-duty trucks.
"MDV" means medium-duty vehicles.
(2) Equivalent inertia weights are determined under subparagraph 40 CFR 86.129-79(a).
(3) Hydrocarbon standards in parentheses apply to total hydrocarbons.
(4) The second set of passenger car standards is optional. A manufacturer must select either the primary or optional sets of standards for its full product line for the entire two-year period.
(5) The maximum projected emissions of oxides of nitrogen measured on the federal Highway Fuel Economy Test (HWFET; 40 CFR Part 600, Subpart B) shall be not greater than 1.33 times the applicable passenger car standards and 2.00 times the applicable passenger car standards and 2.00 times the applicable light-duty truck and medium-duty vehicle standards shown in the table. Both the projected emissions and the HWFET standard shall be rounded to the nearest 0.1 gm/mi before being compared.
(6) For vehicles from evaporative emissions families with projected 50,000 mile evaporative emissions values below 1.0 gm/test, an adjustment to the hydrocarbon exhaust emission standards may be granted by the Executive Officer. The adjusted standard will be calculated using the following formula:

$$HC_{ex} = .75\ (.185 - [(Di+3.3\ Hs) \div (29.4)]) + HC_{o}$$

Where:

HC_{ex} = adjusted exhaust hydrocarbon standard

HC_{o} = unadjusted exhaust hydrocarbon standard

Di = diurnal evaporative emissions

Hs = hot soak evaporative emissions.

(b) The test procedures for determining compliance with these standards are set forth in "California Exhaust Emission Standards and Test Procedures for 1981 and Subsequent Model Passenger Cars, Light-Duty Trucks, and Medium-Duty Vehicles" adopted by the Air Resources Board on November 23, 1976, and as last amended ~~August 28, 1980.~~ December 2, 1980.

Attachment B

State of California
AIR RESOURCES BOARD

Note: These procedures are printed in a style to indicate the adopted changes. New text is underlined and deleted portions are noted.

CALIFORNIA EXHAUST EMISSION STANDARDS AND TEST PROCEDURES FOR 1981 AND SUBSEQUENT MODEL PASSENGER CARS, LIGHT-DUTY TRUCKS, AND MEDIUM-DUTY VEHICLES

Adopted: November 23, 1976
Adopted: December 14, 1976
Amended: May 26, 1977
Amended: June 8, 1977
Amended: June 22, 1977
Amended: September 20, 1977
Amended: January 15, 1978
Amended: March 1, 1978
Amended: April 10, 1978
Amended: May 24, 1978
Amended: February 9, 1979
Amended: May 22, 1979
Amended: March 5, 1980
Amended: March 26, 1980
Amended: August 27, 1980
Amended: August 28, 1980
Amended: December 2, 1980

CALIFORNIA EXHAUST EMISSION STANDARDS AND TEST PROCEDURES FOR 1981 AND SUBSEQUENT MODEL PASSENGER CARS, LIGHT-DUTY TRUCKS AND MEDIUM-DUTY VEHICLES

The provisions of Subparts A and B, Part 86, Title 40, Code of Federal Regulations, as they existed on April 15, 1978, are hereby adopted as the California Exhaust Emission Standards and Test Procedures for 1981 and Subsequent Model Passenger Cars, Light-Duty Trucks and Medium-Duty Vehicles, with the following exceptions and additions:

1. Applicability

   a. These test procedures are applicable to 1981 and subsequent model passenger cars, light-duty trucks and medium-duty vehicles, except motorcycles. References to "light-duty trucks" in 40 CFR 86 shall apply both to "light-duty trucks" and "medium-duty vehicles" in these procedures.

   b. Any reference to vehicle sales throughout the United States shall mean vehicle sales in California.

   c. Regulations concerning EPA hearings, EPA inspections, specific language on the Certificate of Conformity, evaporative emissions, high-altitude vehicles and testing, and heavy-duty engines and vehicles shall not be applicable to these procedures, except where specifically noted.

2. Definitions

   a. "Administrator" means the Executive Officer of the Air Resources Board.

   b. "Certificate of Conformity" means Executive Order certifying vehicles for sale in California.

   c. "Certification" means certification as defined in Section 39018 of the Health and Safety Code.

   d. "Passenger car" means any motor vehicle designed primarily for transportation of persons and having a capacity of twelve persons or less.

e. "Heavy-duty engine" means an engine which is used to propel a heavy-duty vehicle.

f. "Heavy-duty vehicle" means any motor vehicle having a manufacturer's gross vehicle weight rating greater than 6,000 pounds, except passenger cars.

g. "Light-duty truck" means any motor vehicle, rated at 6,000 pounds gross vehicle weight or less, which is designed primarily for purposes of transportation of property or is a derivative of such a vehicle, or is available with special features enabling off-street or off-highway operation and use.

h. "Medium-duty vehicle" means any heavy-duty vehicle having a manufacturer's gross vehicle weight rating of 8500 pounds or less.

3. Test Procedures

a. In order to demonstrate compliance with a non-methane hydrocarbon emission standard, hydrocarbon emissions shall be measured in accordance with the "California Non-Methane Hydrocarbon Test Procedures."

b. Durability data submitted pursuant to subparagraph 86.078-23(f) may be from vehicles previously certified by EPA or ARB.

c. The requirements in subparagraph 86.078-28(a)(4)(i)(B) (durability vehicles must meet emission standards) refer, for each pollutant, to the highest of either the federal or California emission standards.

d. In paragraph 86.079-21 (Application for certification), amend subparagraph (b)(5) to read:

(5) A statement of maintenance and procedures consistent with the restrictions imposed under subparagraph 86.078-25(a)(1), necessary to assure that the vehicles (or engines) covered by a certificate of conformity in operation in normal use conform to the regulations, and a description of the program for training of personnel for such maintenance, and the equipment required.

e. In paragraph 86.078-25 (Maintenance):

1. Amend subparagraph (a)(1) to read as follows:

(1) Scheduled maintenance on the engine, emission control system and fuel system of durability vehicles shall, unless otherwise provided pursuant to paragraph (a)(5)(iii), be restricted as set forth in the following provisions.

(i)(A) for gasoline-fueled vehicles, maintenance shall be restricted to the inspection, replacement, cleaning, adjustment and/or service of the following items at intervals no more frequent than indicated:

(1) Drive belts on engine accessories (tension adjustment only); (30,000 miles).

(2) Valve lash (15,000 miles).

(3) Spark plugs (30,000 miles).

(4) Air filter (30,000 miles).

(5) Exhaust gas sensor (30,000 miles): Provided that an audible and/or visible signal approved by the Executive Officer alerts the vehicle operator to the need for sensor maintenance at the mileage point.

(6) Choke (cleaning or lubrication only); (30,000 miles).

(7) In addition, adjustment of the engine idle speed (curb idle and fast idle), valve lash, and engine bolt torque may be performed once during the first 5,000 miles of scheduled driving, provided the manufacturer makes a satisfactory showing that the maintenance will be performed on vehicles in use.

(B) for diesel-powered vehicles, maintenance shall be restricted to the following items at intervals no more frequent than every 12,500 miles of scheduled driving, provided that no maintenance may be performed after 45,000 miles of scheduled driving:

(1) Adjust low idle speed.

(2) Adjust valve lash if required.

(3) Adjust injector timing.

(4) Adjust governor.

(5) Clean and service injector tips.

(6) Adjust drive belt tension on engine accessories.

(7) Check engine bolt torque and tighten as required.

(ii) Change of engine and transmission oil, change or service of oil filter and, for diesel-powered vehicles only, change or service of fuel filter and air filter, will be allowed at the mileage intervals specified in the manufacturer's maintenance instructions.

(iii) Maintenance shall be conducted in a manner consistent with service instructions and specifications provided by the manufacturer for use by customer service personnel.

(2) Delete subparagraph (a)(3) (Service of exhaust gas recirculation system).

(3) Delete subparagraph (a)(4) (Service of catalytic converter).

f. In paragraph 86.078-38 (Maintenance instructions):

1. Amend subparagraph (a) to read:

(a) The manufacturer shall furnish or cause to be furnished to the purchaser of each new motor vehicle (or motor vehicle engine) subject to the standards prescribed in paragraphs 86.078-8 through 86.078-11 as applicable, written instructions for the maintenance and use of the vehicle (or engine) by the purchaser as may be reasonable and necessary to assure the proper functioning of emission control systems in normal use. Such instructions shall be consistent with and not require maintenance in excess of the restrictions imposed under subparagraph 86.078-25(a)(1), except that the instructions may, subject to approval by the Administrator, require additional maintenance for vehicles operated under extreme conditions. In addition, subject to approval by the Administrator, the instructions may require inspections necessary to insure safe operation of the vehicle in use.

In addition to any maintenance which may be required pursuant to the preceding paragraph, the instructions may also recommend such inspections, maintenance, and repair as may be reasonable and necessary for the proper functioning of the vehicle and its emission control systems. If the instructions recommend maintenance in addition to that which may be required pursuant to the preceding paragraph, they shall distinguish clearly between required and recommended maintenance.

2. Amend subparagraph (c)(1) to read:

(1) Such instructions shall specify the performance of all scheduled maintenance performed by the manufacturer under subparagraph 86.078-25(a)(1).

If the instructions specify recommended maintenance as well as required maintenance, they shall distinguish clearly between the two.

3. Amend subparagraph (d) by adding a new subparagraph (3) to read:

(3) Such instructions shall specify the performance of all scheduled maintenance performed by the manufacturer under subparagraph 86.078-25(a)(1).

If the instructions specify recommended maintenance as well as required maintenance, they shall distinguish clearly between the two.

g. Amend subparagraph 86.078-39(a) (Submission of maintenance instructions) to read:

(a) The manufacturer shall provide to the Administrator, no later than the time of the submission required by paragraph 86.078-23 a copy of the maintenance instructions which the manufacturer proposes to supply to the ultimate purchaser in accordance with subparagraph 86.078-38(a). The Administrator will review such instructions to determine whether they are consistent with federal requirements, and to determine whether the instructions for required maintenance are consistent with the restrictions imposed under subparagraph 86.078-25(a)(1). The Administrator will notify the manufacturer of his determinations.

4. Standards

The following standards represent the maximum projected exhaust emissions for the useful life of the vehicle.

Model Year	Vehicle Type (a)	Equivalent Inertia Weight (lbs.)(b)	Exhaust Emission Standards (grams per vehicle mile) Non-Methane Hydrocarbons(c)	Carbon Monoxide	Oxides of Nitrogen (NO_2)(e)
1981	PC	All	(0.41)	3.4	1.0
	PC(d)	All	0.39 (0.41)	7.0	0.7
	PC(g)	All	0.39 (0.41)	7.0	1.5
	LDT, MDV	0-3999	0.39 (0.41)	9.0	1.0
	LDT,MDV(h)	0-3999	0.39 (0.41)	9.0	1.5
	LDT, MDV	4000-5999	0.50 (0.50)	9.0	1.5
	MDV	6000&larger	0.60 (0.60)	9.0	2.0
1982	PC	All	0.39 (0.41)	7.0	0.4
	PC(d)	All	0.39 (0.41)	7.0	0.7
	PC(i)	All	0.39 (0.41)	7.0	1.0
	~~Diesel-PC~~	~~All~~	~~0.39 (0.41)~~	~~7.0~~	~~1.2~~
	LDT, MDV	0-3999	0.39 (0.41)	9.0	1.0
	LDT, MDV	4000-5999	0.50 (0.50)	9.0	1.5
	LDT,MDV(h)	0-3999	0.39 (0.41)	9.0	1.5
	MDV	6000&larger	0.60 (0.60)	9.0	2.0
1983 & Sub-sequent	PC	All	0.39 (0.41)	7.0	0.4
	LDT, MDV	0-3999	0.39 (0.41)	9.0	0.4
	LDT, MDV	4000-5999	0.50 (0.50)	9.0	1.0
	MDV	6000&larger	0.60 (0.60)	9.0	1.5
1983(i)	PC	All	0.39 (0.41)	7.0	0.7
	LDT, MDV	0-3999	0.39 (0.41)	9.0	1.0 (j)
1984(i)	PC	All	0.39 (0.41)	7.0	0.7
	LDT, MDV	0-3999	0.39 (0.41)	9.0	0.7(j)
1985(i)	LDT, MDV	0-3999	0.39 (0.41)	9.0	0.7

Model Year	Vehicle Type (a)	Equivalent Inertia Weight (lbs.)(b)	100,000 Mile Exhaust Emission Standards (grams per vehicle mile) Non-Methane Hydrocarbons(c)	Carbon Monoxide	Oxides of Nitrogen NO_2(e)
1981	PC(Option 1)	All	0.39 (f)	3.4	1.5
	PC(Option 2)	All	0.46 (f)	4.0	1.5
	LDT, MDV (Option 1)	0-3999	0.39 (0.41) (f)	9.0	1.5
	LDT, MDV (Option 2)	0-3999	0.46 (f)	10.6	1.5
	LDT, MDV	4000-5999	0.50 (0.50) (f)	9.0	2.0
	MDV	6000+larger	0.60 (0.60) (f)	9.0	2.3
1982	PC(Option 1)	All	(0.41)	7.0	~~1.0-(k)~~ 1.5
	PC(Option 2)	All	0.46	8.3	~~1.0-(k)~~ 1.5
	LDT, MDV (Option 1)	0-3999	0.39 (0.41)	9.0	1.5
	LDT, MDV (Option 2)	0-3999	0.46	10.6	1.5
	LDT, MDV	4000-5999	0.50 (0.50)	9.0	2.0
	MDV	6000&larger	0.60 (0.60)	9.0	2.3
1983 & Sub-sequent	PC	All	0.39 (0.41)	7.0	1.0
	PC	All	0.46	8.3	1.0
	LDT, MDV (Option 1)	0-3999	0.39 (0.41)	9.0	1.0
	LDT, MDV (Option 2)	0-3999	0.46	10.6	1.0
	LDT, MDV	4000-5999	0.50 (0.50)	9.0	1.5
	MDV	6000&larger	0.60 (0.60)	9.0	2.0

(a) "PC" means passenger cars.
"LDT" means light-duty trucks.
"MDV" means medium-duty vehicles.

(b) Equivalent inertia weights are determined under subparagraph 86.129-79(a).

(c) Hydrocarbon standards in parentheses apply to total hydrocarbons.

(d) The second set of passenger car standards is optional. A manufacturer must select either the primary or optional sets of standards for its full product line for the entire two-year period.

(e) The maximum projected emissions of oxides of nitrogen measured on the federal Highway Fuel Economy Test (HWFET; 40 CFR Part 600, Subparagraph B) shall be no greater than 1.33 times the applicable passenger car standards and 2.0 times the applicable light-duty truck and medium-duty vehicle standards shown in the table. Both the projected emissions and the HWFET standard shall be rounded to the nearest 0.1 gm/mi before being compared.

(f) For vehicles from evaporative emissions families with projected 50,000 mile evaporative emissions values below 1.0 gm/test, an adjustment to the hydrocarbon exhaust emission standard may be granted by the Executive Officer. The adjusted standard will be calculated using the following formula:

$$HC_{ex} = .75\ (.185 - \frac{Di+3.3\ Hs}{29.4}\ ) + HC_o$$

Where:

HC_{ex} = adjusted exhaust hydrocarbon standard

HC_o = unadjusted exhaust hydrocarbon standard

Di = diurnal evaporative emissions
Hs = hot soak evaporative emissions.

(g) For vehicles certified to special standards authorized by Section 1960.2, Article 2, subchapter 1, Chapter 3, Title 13, California Administrative Code.

(h) For vehicles certified to special standards authorized by Section 1960.3, Article 2, subchapter 1, Chapter 3, Title 13, California Administrative Code.

(i) For vehicles certified to special standards authorized by Section 1960.4, Article 2, Subchapter 1, Chapter 3, Title 13, California Administrative Code. Special standards revert to "1983 and subsequent" standards for 1985 and subsequent passenger cars and 1986 and subsequent LDTs and MDVs.

(j) The Executive Officer may grant limited relief from the 1983 passenger car and 1984 LDT and MDV special NOx standard to a manufacturer who exceeds the standard because of unforeseen technical problems.

~~(k) Optionally, for turbocharged diesels, the NOx standard is 1.5 grams per mile.~~

5. Additional Requirement

a. A statement must be supplied that the production vehicles shall be in all material respects the same as those for which certification is granted.

b. If a gasoline-fueled vehicle manufacturer requires the use of unleaded fuel, a statement will be required that the engine and transmission combinations for which certification is requested are designed to operate satisfactorily on a gasoline having a research octane number not greater than 91.

c. Labeling required pursuant to paragraph 86.079-35 and Section 1965, Chapter 3, Title 13 of the California Administrative Code shall conform with the requirements specified in the "California Motor Vehicle Tune-Up Label Specifications."

d. For gasoline-powered vehicles evidence shall be supplied that the air/fuel metering system or secondary air injection system is capable of providing sufficient oxygen to theoretically allow enough oxidation to attain the CO emission standard at barometric pressures equivalent to those expected at altitudes ranging from sea level to 6,000 feet elevation.

e. The mechanism for adjusting the idle air/fuel mixture, if any, shall be designed so that either:

(i) The mixture adjustment mechanism is not visible, even with the air cleaner removed, and special tools and/or procedures are required to make adjustments; or

(ii) in the alternative, the Executive Officer may, upon reasonable notice to the manufacturer, require that a certification test of a vehicle be conducted with the idle air/fuel mixture at any setting which the Executive Officer finds corresponds to settings likely to be encountered in actual use. The Executive Officer, in making this finding, shall consider the difficulty of making adjustments, damage to the carburetor in the event of any effort to make an improper adjustment, and the need to replace parts following the adjustment.

The manufacturer shall submit for approval by the Executive Officer his or her proposed method for compliance with this requirement in his or her preliminary application for certification.

f. The exhaust emissions shall be measured from all exhaust emission data vehicles tested in accordance with the federal Highway Fuel Economy Test (HWFET; 40 CFR Part 600 Subpart B). The oxides of nitrogen emissions measured during such tests shall be multiplied by the oxides of nitrogen deterioration factor computed in accordance with paragraph 86.078-28, and then rounded and compared with the standard as set forth in paragraph 4 above. All data obtained pursuant to this paragraph shall be reported in accordance with procedures applicable to other exhaust emissions data required pursuant to these procedures.

In the event that one or more of the manufacturer's emission data vehicles fail the HWFET standard listed in paragraph 4, the manufacturer may submit to the Executive Officer engineering data or other evidence showing that the system is capable of complying with the standard. If the Executive Officer finds, on the basis of an engineering evaluation, that the system can comply with the HWFET standard, he or she may accept the information supplied by the manufacturer in lieu of vehicle test data.

g. The manufacturer shall submit to the Executive Officer a statement that those vehicles for which certification is requested have driveability and performance characteristics which satisfy that manufacturer's customary driveability and performance requirements for vehicles sold in the United States. This statement shall be based on driveability data and other evidence showing compliance with the manufacturer's performance criteria. This statement shall be supplied with the manufacturer's final application for certification, and with all running changes for which emission testing is required.

If the Executive Officer has evidence to show that in-use vehicles demonstrate poor performance that could result in wide-spread tampering with the emission control systems, he or she may request all driveability data and other evidence used by the manufacturer to justify the performance statement.

6. Optional 100,000 Mile Certification Procedure

The alternate emission standards shown in paragraph (4) above shall apply to any engine family which meets all of the following additional requirements:

a. Each exhaust emission durability data vehicle shall be driven, with all emission control systems installed and operating, for 100,000 miles or such lesser distance as the Executive Officer may agree to as meeting the objectives of this procedure. Compliance with the emission standards shall be established as follows:

(i) The linear regression line for all pollutants shall be established by use of all required data from tests of the durability vehicle at every 5,000 mile intervals from 5,000 to 100,000 miles. The requirements in subparagraph 86.078-28(a)(4)(i)(B)(durability vehicles must meet emissions standards) refer, for each pollutant, to the highest of either the federal 50,000 mile or California 100,000 mile emission standards.

(ii) Compliance with the hydrocarbon and carbon monoxide standards shall be determined as follows:

(a) For Option 1:

(A) the interpolated 4,000 and 50,000 mile points on the linear regression line in (i) shall not exceed the appropriate hydrocarbon and carbon monoxide standards, except as in (B) below.

(B) the linear regression line in (i) may exceed the standard provided that no data point exceeds the standard.

(C) the hydrocarbon and carbon monoxide data from the 4,000 mile test point of the emission data vehicle shall be multiplied by the deterioration factor computed by dividing the interpolated 50,000 mile point by the interpolated 4,000 mile point. These values shall not exceed the appropriate hydrocarbon and carbon monoxide standards.

(b) For Option 2:

(A) the interpolated 4,000 and 100,000 mile points on the linear regression line in (i) shall not exceed the appropriate hydrocarbon and carbon monoxide standards, except as in (B) below.

(B) the linear regression line in (i) may exceed the standard provided that no data point exceeds the standard.

(C) the hydrocarbon and carbon monoxide data from the 4,000 mile test point of the emission data vehicle shall be multiplied by the deterioration factor computed by dividing the interpolated 100,000 mile point by the interpolated 4,000 mile point. These values shall not exceed the appropriate 100,000 mile hydrocarbon and carbon monoxide standards.

(iii) Compliance with the oxides of nitrogen standard for Options 1 and 2 shall be determined as follows:

(a) the interpolated 4,000 and 100,000 mile points on the linear regression line in (i) shall not exceed the appropriate 100,000 mile oxides of nitrogen standard except as in (b) below.

(b) the linear regression line in (i) may exceed the standard provided that no data point exceeds the standard.

(c) the oxides of nitrogen data from the 4,000 mile test point of the emission data vehicle shall be multiplied by the deterioration factor computed by dividing the interpolated 100,000 mile point by the interpolated 4,000 mile point. These values shall not exceed the appropriate 100,000 mile oxides of nitrogen standard.

All references in these test procedures to "useful life, " 5 years, and 50,000 miles shall mean "total life," 10 years, and 100,000 miles, respectively, except in subparagraph (ii).

b. Only the following scheduled maintenance shall be allowed under subparagraph 86.078.25(a)(1)(i).

25(a)(1)(i)(A) Option 1. For 1981 and later model gasoline or diesel-fueled vehicles, maintenance shall be restricted to the inspection, replacement, cleaning, adjustment, and/or service of the following items at intervals no more frequent than indicated.

(1) Drive belt tension on engine accessories (30,000 miles).
(2) Valve lash (15,000 miles).
(3) Spark plugs (30,000 miles).
(4) Air filter (30,000 miles).
(5) Exhaust gas sensor (30,000 miles); Provided that an audible and/or visible signal approved by the Executive Officer alerts the vehicle operator to the need for sensor maintenance.
(6) Choke, cleaning or lubrication only (30,000 miles).
(7) Idle speed (30,000 miles).
(8) Fuel Filter (30,000 miles).
(9) Injection timing (30,000 miles).

25(a)(1)(i)(B) Option 2. For 1981 and later model gasoline or diesel-fueled vehicles, maintenance shall be restricted to the inspection, replacement, cleaning, adjustment, and/or service of the following items at intervals no more frequent than indicated:

(1) Drive belt tension on engine accessories (30,000 miles).
(2) Valve lash (15,000 miles).
(3) Spark plugs (30,000 miles).
(4) Air filter (30,000 miles).
(5) Fuel filter (30,000 miles).
(6) Idle speed (30,000 miles).
(7) Injection timing (30,000 miles).

(iii) In addition, adjustment of the engine idle speed (curb idle and fast idle), valve lash, and engine bolt torque may be performed once during the first 5,000 miles of scheduled driving, provided the manufacturer makes a satisfactory showing that the maintenance will be performed on vehicles in use.

c. The manufacturer agrees to apply to vehicles certified under this paragraph the provisions of Section 43204 of the California Health and Safety Code for a period of ten year or 100,000 miles, whichever first occurs.

8. For all emission standards options, any vehicle which is subject to a standard set by federal law or regulation controlling emissions of particulate matter must conform to such standard.

State of California
AIR RESOURCES BOARD

Response to Significant Environmental Issues

Item: PUBLIC HEARING TO CONSIDER CONFIRMATION OF AMENDMENTS TO TITLE 13, CALIFORNIA ADMINISTRATIVE CODE, REGARDING THE 1982 AND SUBSEQUENT MODEL YEAR EXHAUST EMISSION STANDARDS.

Agenda Item No: 80-25-2 (Resolution No. 59)

Public Hearing Date: December 2, 1980

Response Date: December 2, 1980

Issuing Authority: Air Resources Board

Comment: The South Coast Air Quality Management District stated that the increase in NOx was unacceptable and that mitigating action should be taken.

Response: Elimination of the HC evaporative allowance should mitigate the added NOx emissions. Further mitigating strategies will be discussed at a Public Hearing in the spring of 1981.

CERTIFIED: Sally Rump
Board Secretary

Date: 12/29/80

RECEIVED BY
Office of the Secretary

DEC 30 1980

Resources Agency of California

State of California

Memorandum

To : Huey D. Johnson
Secretary
Resources Agency
1416 - 9th Street
Sacramento, CA 95814

Date : December 29, 1980

Subject: Filing of Notice of Decision of the Air Resources Board

From : **Air Resources Board**

Pursuant to Title 17, Section 60007(b), and in compliance with Air Resources Board certification under section 21080.5 of the Public Resources Code, the Air Resources Board hereby forwards for posting the attached notice of decision and response to environmental comments raised during the comment period.

Sally Rump

Sally Rump
BOARD SECRETARY

att: Resolution 80-58
[redacted]
Resolution 80-60

RECEIVED BY
Office of the Secretary

DEC 30 1980

Resources Agency of California

State of California
AIR RESOURCES BOARD

Resolution 80-59

December 2, 1980

Agenda Item No. 80-25-2

WHEREAS, Section 39601 of the Health and Safety Code authorizes the Air Resources Board to adopt standards, rules, and regulations necessary for the proper execution of the powers and duties granted to and imposed upon the Board by law; and

WHEREAS, Section 43000(e) of the Health and Safety Code states that emission standards applied to new motor vehicles are standards with which all new motor vehicles shall comply; and

WHEREAS, Sections 43101 and 43104 of the Health and Safety Code authorize the Board to adopt vehicle emission standards and test procedures in order to control or eliminate air pollution caused by motor vehicles; and

WHEREAS, manufacturers of diesel-fueled passenger cars have petitioned the Board to consider amending the 100,000 mile 1.0 gram per mile oxides of nitrogen (NOx) standard for 1982 based upon their asserted lack of technological capability to meet the standard; and

WHEREAS, the Board finds that manufacturers are making and have made a good faith effort to meet the 1.2 gpm NOx standard; and

WHEREAS, the Board finds that there are technological problems associated with diesel passenger cars meeting a NOx standard of 1.0 gram per mile in model year 1982; and

WHEREAS, the Board finds that in model year 1982, a NOx emission standard of 1.5 grams per mile for a useful vehicle life of 100,000 miles is technologically feasible for diesel passenger cars; and

WHEREAS, the Board confirms its previous finding that in model year 1983, a NOx emission standard of 1.0 gram per mile for a useful vehicle life of 100,000 miles is technologically feasible for all light-duty diesel vehicles; and

WHEREAS, the California Environmental Quality Act and Board regulations require that no project having adverse environmental impacts be adopted as originally proposed if feasible alternatives or mitigation measures are available; and

RECEIVED BY
Office of the Secretary

DEC 30 1980

Resources Agency of California

State of California
AIR RESOURCES BOARD

Resolution 80-60

December 2, 1980

Agenda Item No. 80-25-2

WHEREAS, Section 39601 of the Health and Safety Code authorizes the Air Resources Board to adopt standards, rules and regulations necessary for the proper execution of the powers and duties granted to and imposed upon the Board by law; and

WHEREAS, Section 43000(e) of the Health and Safety Code states that emission standards applied to new motor vehicles are standards with which all new motor vehicles shall comply; and

WHEREAS, Sections 43101 and 43104 of the Health and Safety Code authorize the Board to adopt vehicle emission standards and test procedures in order to control or eliminate air pollution caused by motor vehicles; and

WHEREAS, the federal Environmental Protection Agency (EPA) has adopted particulate emission standards for 1982 and subsequent model year diesel-fueled light-duty vehicles and light-duty trucks, which standards are applicable to vehicles sold in California; and

WHEREAS, the Board finds that control of particulate emissions is necessary to protect the public health and achieve federal and state ambient air quality standards; and

WHEREAS, the Board finds that insufficient information is now available to enable it to establish an independent California emission standard for particulate matter; and

WHEREAS, the California Environmental Quality Act and Board regulations require that no project having adverse environmental impacts be adopted as originally proposed if feasible alternatives or mitigation measures are available; and

WHEREAS, an emergency public hearing has been held in accordance with the provisions of the Administrative Procedure Act (Government Code, Title 2, Division 3, Part 1, Chapter 4.5); and

WHEREAS, a confirmatory public hearing and other administrative proceedings have been held in accordance with the provisions of the Administrative Procedure Act;

NOW, THEREFORE, BE IT RESOLVED, that the Board hereby confirms its adoption of amendments to Section 1960.1, Title 13, California Administrative Code, as set forth in Attachment A hereto.

BE IT FURTHER RESOLVED, that the Board hereby confirms amendments made to the "California Exhaust Emission Standards and Test Procedures for 1981 and Subsequent Model Passenger Cars, Light-Duty Trucks and Medium-Duty Vehicles" as set forth in Attachment B hereto.

BE IT FURTHER RESOLVED, that the Board hereby determines that the regulations and test procedures adopted herein are, in the aggregate, at least as protective of public health and welfare as applicable federal standards.

I certify that the above is a true and correct copy of Resolution 80-60, as adopted by the Air Resources Board.

Sally Rump

Sally Rump, Board Secretary

Attachment B

State of California
AIR RESOURCES BOARD

Note: These procedures are printed in a style to indicate the confirmed changes. New text is underlined and deleted portions are noted.

CALIFORNIA EXHAUST EMISSION STANDARDS AND TEST PROCEDURES FOR 1981 AND SUBSEQUENT MODEL PASSENGER CARS, LIGHT-DUTY TRUCKS, AND MEDIUM-DUTY VEHICLES

Adopted: November 23, 1976
Adopted: December 14, 1976
Amended: May 26, 1977
Amended: June 8, 1977
Amended: June 22, 1977
Amended: September 20, 1977
Amended: January 15, 1978
Amended: March 1, 1978
Amended: April 10, 1978
Amended: May 24, 1978
Amended: February 9, 1979
Amended: May 22, 1979
Amended: March 5, 1980
Amended: March 26, 1980
Amended: August 27, 1980
Amended: August 28, 1980
Amended: December 2, 1980

CALIFORNIA EXHAUST EMISSION STANDARDS AND TEST PROCEDURES FOR 1981 AND SUBSEQUENT MODEL PASSENGER CARS, LIGHT-DUTY TRUCKS AND MEDIUM-DUTY VEHICLES

The provisions of Subparts A and B, Part 86, Title 40, Code of Federal Regulations, as they existed on April 15, 1978, are hereby adopted as the California Exhaust Emission Standards and Test Procedures for 1981 and Subsequent Model Passenger Cars, Light-Duty Trucks and Medium-Duty Vehicles, with the following exceptions and additions:

1. Applicability

   a. These test procedures are applicable to 1981 and subsequent model passenger cars, light-duty trucks and medium-duty vehicles, except motorcycles. References to "light-duty trucks" in 40 CFR 86 shall apply both to "light-duty trucks" and "medium-duty vehicles" in these procedures.

   b. Any reference to vehicle sales throughout the United States shall mean vehicle sales in California.

   c. Regulations concerning EPA hearings, EPA inspections, specific language on the Certificate of Conformity, evaporative emissions, high-altitude vehicles and testing, and heavy-duty engines and vehicles shall not be applicable to these procedures, except where specifically noted.

2. Definitions

   a. "Administrator" means the Executive Officer of the Air Resources Board.

   b. "Certificate of Conformity" means Executive Order certifying vehicles for sale in California.

   c. "Certification" means certification as defined in Section 39018 of the Health and Safety Code.

   d. "Passenger car" means any motor vehicle designed primarily for transportation of persons and having a capacity of twelve persons or less.

e. "Heavy-duty engine" means an engine which is used to propel a heavy-duty vehicle.

f. "Heavy-duty vehicle" means any motor vehicle having a manufacturer's gross vehicle weight rating greater than 6,000 pounds, except passenger cars.

g. "Light-duty truck" means any motor vehicle, rated at 6,000 pounds gross vehicle weight or less, which is designed primarily for purposes of transportation of property or is a derivative of such a vehicle, or is available with special features enabling off-street or off-highway operation and use.

h. "Medium-duty vehicle" means any heavy-duty vehicle having a manufacturer's gross vehicle weight rating of 8500 pounds or less.

3. Test Procedures

a. In order to demonstrate compliance with a non-methane hydrocarbon emission standard, hydrocarbon emissions shall be measured in accordance with the "California Non-Methane Hydrocarbon Test Procedures."

b. Durability data submitted pursuant to subparagraph 86.078-23(f) may be from vehicles previously certified by EPA or ARB.

c. The requirements in subparagraph 86.078-28(a)(4)(i)(B) (durability vehicles must meet emission standards) refer, for each pollutant, to the highest of either the federal or California emission standards.

d. In paragraph 86.079-21 (Application for certification), amend subparagraph (b)(5) to read:

(5) A statement of maintenance and procedures consistent with the restrictions imposed under subparagraph 86.078-25(a)(1), necessary to assure that the vehicles (or engines) covered by a certificate of conformity in operation in normal use conform to the regulations, and a description of the program for training of personnel for such maintenance, and the equipment required.

e. In paragraph 86.078-25 (Maintenance):

1. Amend subparagraph (a)(1) to read as follows:

(1) Scheduled maintenance on the engine, emission control system and fuel system of durability vehicles shall, unless otherwise provided pursuant to paragraph (a)(5)(iii), be restricted as set forth in the following provisions.

(i)(A) for gasoline-fueled vehicles, maintenance shall be restricted to the inspection, replacement, cleaning, adjustment and/or service of the following items at intervals no more frequent than indicated:

(1) Drive belts on engine accessories (tension adjustment only); (30,000 miles).

(2) Valve lash (15,000 miles).

(3) Spark plugs (30,000 miles).

(4) Air filter (30,000 miles).

(5) Exhaust gas sensor (30,000 miles): Provided that an audible and/or visible signal approved by the Executive Officer alerts the vehicle operator to the need for sensor maintenance at the mileage point.

(6) Choke (cleaning or lubrication only); (30,000 miles).

(7) In addition, adjustment of the engine idle speed (curb idle and fast idle), valve lash, and engine bolt torque may be performed once during the first 5,000 miles of scheduled driving, provided the manufacturer makes a satisfactory showing that the maintenance will be performed on vehicles in use.

(B) for diesel-powered vehicles, maintenance shall be restricted to the following items at intervals no more frequent than every 12,500 miles of scheduled driving, provided that no maintenance may be performed after 45,000 miles of scheduled driving:

(1) Adjust low idle speed.

(2) Adjust valve lash if required.

(3) Adjust injector timing.

(4) Adjust governor.

(5) Clean and service injector tips.

(6) Adjust drive belt tension on engine accessories.

(7) Check engine bolt torque and tighten as required.

(ii) Change of engine and transmission oil, change or service of oil filter and, for diesel-powered vehicles only, change or service of fuel filter and air filter, will be allowed at the mileage intervals specified in the manufacturer's maintenance instructions.

(iii) Maintenance shall be conducted in a manner consistent with service instructions and specifications provided by the manufacturer for use by customer service personnel.

(2) Delete subparagraph (a)(3) (Service of exhaust gas recirculation system).

(3) Delete subparagraph (a)(4) (Service of catalytic converter).

f. In paragraph 86.078-38 (Maintenance instructions):

1. Amend subparagraph (a) to read:

(a) The manufacturer shall furnish or cause to be furnished to the purchaser of each new motor vehicle (or motor vehicle engine) subject to the standards prescribed in paragraphs 86.078-8 through 86.078-11 as applicable, written instructions for the maintenance and use of the vehicle (or engine) by the purchaser as may be reasonable and necessary to assure the proper functioning of emission control systems in normal use. Such instructions shall be consistent with and not require maintenance in excess of the restrictions imposed under subparagraph 86.078-25(a)(1), except that the instructions may, subject to approval by the Administrator, require additional maintenance for vehicles operated under extreme conditions. In addition, subject to approval by the Administrator, the instructions may require inspections necessary to insure safe operation of the vehicle in use.

In addition to any maintenance which may be required pursuant to the preceding paragraph, the instructions may also recommend such inspections, maintenance, and repair as may be reasonable and necessary for the proper functioning of the vehicle and its emission control systems. If the instructions recommend maintenance in addition to that which may be required pursuant to the preceding paragraph, they shall distinguish clearly between required and recommended maintenance.

2. Amend subparagraph (c)(1) to read:

(1) Such instructions shall specify the performance of all scheduled maintenance performed by the manufacturer under subparagraph 86.078-25(a)(1).

If the instructions specify recommended maintenance as well as required maintenance, they shall distinguish clearly between the two.

3. Amend subparagraph (d) by adding a new subparagraph (3) to read:

(3) Such instructions shall specify the performance of all scheduled maintenance performed by the manufacturer under subparagraph 86.078-25(a)(1).

If the instructions specify recommended maintenance as well as required maintenance, they shall distinguish clearly between the two.

g. Amend subparagraph 86.078-39(a) (Submission of maintenance instructions) to read:

(a) The manufacturer shall provide to the Administrator, no later than the time of the submission required by paragraph 86.078-23 a copy of the maintenance instructions which the manufacturer proposes to supply to the ultimate purchaser in accordance with subparagraph 86.078-38(a). The Administrator will review such instructions to determine whether they are consistent with federal requirements, and to determine whether the instructions for required maintenance are consistent with the restrictions imposed under subparagraph 86.078-25(a)(1). The Administrator will notify the manufacturer of his determinations.

4. Standards

The following standards represent the maximum projected exhaust emissions for the useful life of the vehicle.

Model Year	Vehicle Type (a)	Equivalent Inertia Weight (lbs.)(b)	Exhaust Emission Standards (grams per vehicle mile) Non-Methane Hydrocarbons(c)	Carbon Monoxide	Oxides of Nitrogen (NO_2)(e)
1981	PC	All	(0.41)	3.4	1.0
	PC(d)	All	0.39 (0.41)	7.0	0.7
	PC(g)	All	0.39 (0.41)	7.0	1.5
	LDT, MDV	0-3999	0.39 (0.41)	9.0	1.0
	LDT,MDV(h)	0-3999	0.39 (0.41)	9.0	1.5
	LDT, MDV	4000-5999	0.50 (0.50)	9.0	1.5
	MDV	6000&larger	0.60 (0.60)	9.0	2.0
1982	PC	All	0.39 (0.41)	7.0	0.4
	PC(d)	All	0.39 (0.41)	7.0	0.7
	PC(i)	All	0.39 (0.41)	7.0	1.0
	LDT, MDV	0-3999	0.39 (0.41)	9.0	1.0
	LDT, MDV	4000-5999	0.50 (0.50)	9.0	1.5
	LDT,MDV(h)	0-3999	0.39 (0.41)	9.0	1.5
	MDV	6000&larger	0.60 (0.60)	9.0	2.0
1983 & Sub-sequent	PC	All	0.39 (0.41)	7.0	0.4
	LDT, MDV	0-3999	0.39 (0.41)	9.0	0.4
	LDT, MDV	4000-5999	0.50 (0.50)	9.0	1.0
	MDV	6000&larger	0.60 (0.60)	9.0	1.5
1983(i)	PC	All	0.39 (0.41)	7.0	0.7
	LDT, MDV	0-3999	0.39 (0.41)	9.0	1.0 (j)
1984(i)	PC	All	0.39 (0.41)	7.0	0.7
	LDT, MDV	0-3999	0.39 (0.41)	9.0	0.7(j)
1985(i)	LDT, MDV	0-3999	0.39 (0.41)	9.0	0.7

Model Year	Vehicle Type (a)	Equivalent Inertia Weight (lbs.)(b)	100,000 Mile Exhaust Emission Standards (grams per vehicle mile) Non-Methane Hydrocarbons(c)	Carbon Monoxide	Oxides of Nitrogen NO_2(e)
1981	PC(Option 1)	All	0.39 (f)	3.4	1.5
	PC(Option 2)	All	0.46 (f)	4.0	1.5
	LDT, MDV (Option 1)	0-3999	0.39 (0.41) (f)	9.0	1.5
	LDT, MDV (Option 2)	0-3999	0.46 (f)	10.6	1.5
	LDT, MDV	4000-5999	0.50 (0.50) (f)	9.0	2.0
	MDV	6000+larger	0.60 (0.60) (f)	9.0	2.3
1982	PC(Option 1)	All	(0.41)	7.0	1.5
	PC(Option 2)	All	0.46	8.3	1.5
	LDT, MDV (Option 1)	0-3999	0.39 (0.41)	9.0	1.5
	LDT, MDV (Option 2)	0-3999	0.46	10.6	1.5
	LDT, MDV	4000-5999	0.50 (0.50)	9.0	2.0
	MDV	6000&larger	0.60 (0.60)	9.0	2.3
1983 & Sub-sequent	PC	All	0.39 (0.41)	7.0	1.0
	PC	All	0.46	8.3	1.0
	LDT, MDV (Option 1)	0-3999	0.39 (0.41)	9.0	1.0
	LDT, MDV (Option 2)	0-3999	0.46	10.6	1.0
	LDT, MDV	4000-5999	0.50 (0.50)	9.0	1.5
	MDV	6000&larger	0.60 (0.60)	9.0	2.0

(a) "PC" means passenger cars.
"LDT" means light-duty trucks.
"MDV" means medium-duty vehicles.

(b) Equivalent inertia weights are determined under subparagraph 86.129-79(a).

(c) Hydrocarbon standards in parentheses apply to total hydrocarbons.

(d) The second set of passenger car standards is optional. A manufacturer must select either the primary or optional sets of standards for its full product line for the entire two-year period.

(e) The maximum projected emissions of oxides of nitrogen measured on the federal Highway Fuel Economy Test (HWFET; 40 CFR Part 600, Subparagraph B) shall be no greater than 1.33 times the applicable passenger car standards and 2.0 times the applicable light-duty truck and medium-duty vehicle standards shown in the table. Both the projected emissions and the HWFET standard shall be rounded to the nearest 0.1 gm/mi before being compared.

(f) For vehicles from evaporative emissions families with projected 50,000 mile evaporative emissions values below 1.0 gm/test, an adjustment to the hydrocarbon exhaust emission standard may be granted by the Executive Officer. The adjusted standard will be calculated using the following formula:

$$HC_{ex} = .75\ (.185 - \frac{Di+3.3\ Hs}{29.4}\ ) + HC_o$$

Where:

HC_{ex} = adjusted exhaust hydrocarbon standard

HC_o = unadjusted exhaust hydrocarbon standard

Di = diurnal evaporative emissions
Hs = hot soak evaporative emissions.

(g) For vehicles certified to special standards authorized by Section 1960.2, Article 2, subchapter 1, Chapter 3, Title 13, California Administrative Code.

(h) For vehicles certified to special standards authorized by Section 1960.3, Article 2, subchapter 1, Chapter 3, Title 13, California Administrative Code.

(i) For vehicles certified to special standards authorized by Section 1960.4, Article 2, Subchapter 1, Chapter 3, Title 13, California Administrative Code. Special standards revert to "1983 and subsequent" standards for 1985 and subsequent passenger cars and 1986 and subsequent LDTs and MDVs.

(j) The Executive Officer may grant limited relief from the 1983 passenger car and 1984 LDT and MDV special NOx standard to a manufacturer who exceeds the standard because of unforeseen technical problems.

5. Additional Requirement

a. A statement must be supplied that the production vehicles shall be in all material respects the same as those for which certification is granted.

b. If a gasoline-fueled vehicle manufacturer requires the use of unleaded fuel, a statement will be required that the engine and transmission combinations for which certification is requested are designed to operate satisfactorily on a gasoline having a research octane number not greater than 91.

c. Labeling required pursuant to paragraph 86.079-35 and Section 1965, Chapter 3, Title 13 of the California Administrative Code shall conform with the requirements specified in the "California Motor Vehicle Tune-Up Label Specifications."

d. For gasoline-powered vehicles evidence shall be supplied that the air/fuel metering system or secondary air injection system is capable of providing sufficient oxygen to theoretically allow enough oxidation to attain the CO emission standard at barometric pressures equivalent to those expected at altitudes ranging from sea level to 6,000 feet elevation.

e. The mechanism for adjusting the idle air/fuel mixture, if any, shall be designed so that either:

(i) The mixture adjustment mechanism is not visible, even with the air cleaner removed, and special tools and/or procedures are required to make adjustments; or

(ii) in the alternative, the Executive Officer may, upon reasonable notice to the manufacturer, require that a certification test of a vehicle be conducted with the idle air/fuel mixture at any setting which the Executive Officer finds corresponds to settings likely to be encountered in actual use. The Executive Officer, in making this finding, shall consider the difficulty of making adjustments, damage to the carburetor in the event of any effort to make an improper adjustment, and the need to replace parts following the adjustment.

The manufacturer shall submit for approval by the Executive Officer his or her proposed method for compliance with this requirement in his or her preliminary application for certification.

f. The exhaust emissions shall be measured from all exhaust emission data vehicles tested in accordance with the federal Highway Fuel Economy Test (HWFET; 40 CFR Part 600 Subpart B). The oxides of nitrogen emissions measured during such tests shall be multiplied by the oxides of nitrogen deterioration factor computed in accordance with paragraph 86.078-28, and then rounded and compared with the standard as set forth in paragraph 4 above. All data obtained pursuant to this paragraph shall be reported in accordance with procedures applicable to other exhaust emissions data required pursuant to these procedures.

In the event that one or more of the manufacturer's emission data vehicles fail the HWFET standard listed in paragraph 4, the manufacturer may submit to the Executive Officer engineering data or other evidence showing that the system is capable of complying with the standard. If the Executive Officer finds, on the basis of an engineering evaluation, that the system can comply with the HWFET standard, he or she may accept the information supplied by the manufacturer in lieu of vehicle test data.

g. The manufacturer shall submit to the Executive Officer a statement that those vehicles for which certification is requested have driveability and performance characteristics which satisfy that manufacturer's customary driveability and performance requirements for vehicles sold in the United States. This statement shall be based on driveability data and other evidence showing compliance with the manufacturer's performance criteria. This statement shall be supplied with the manufacturer's final application for certification, and with all running changes for which emission testing is required.

If the Executive Officer has evidence to show that in-use vehicles demonstrate poor performance that could result in wide-spread tampering with the emission control systems, he or she may request all driveability data and other evidence used by the manufacturer to justify the performance statement.

6. Optional 100,000 Mile Certification Procedure

The alternate emission standards shown in paragraph (4) above shall apply to any engine family which meets all of the following additional requirements:

a. Each exhaust emission durability data vehicle shall be driven, with all emission control systems installed and operating, for 100,000 miles or such lesser distance as the Executive Officer may agree to as meeting the objectives of this procedure. Compliance with the emission standards shall be established as follows:

(i) The linear regression line for all pollutants shall be established by use of all required data from tests of the durability vehicle at every 5,000 mile intervals from 5,000 to 100,000 miles. The requirements in subparagraph 86.078-28(a)(4)(i)(B)(durability vehicles must meet emissions standards) refer, for each pollutant, to the highest of either the federal 50,000 mile or California 100,000 mile emission standards.

(ii) Compliance with the hydrocarbon and carbon monoxide standards shall be determined as follows:

(a) For Option 1:

(A) the interpolated 4,000 and 50,000 mile points on the linear regression line in (i) shall not exceed the appropriate hydrocarbon and carbon monoxide standards, except as in (B) below.

(B) the linear regression line in (i) may exceed the standard provided that no data point exceeds the standard.

(C) the hydrocarbon and carbon monoxide data from the 4,000 mile test point of the emission data vehicle shall be multiplied by the deterioration factor computed by dividing the interpolated 50,000 mile point by the interpolated 4,000 mile point. These values shall not exceed the appropriate hydrocarbon and carbon monoxide standards.

(b) For Option 2:

(A) the interpolated 4,000 and 100,000 mile points on the linear regression line in (i) shall not exceed the appropriate hydrocarbon and carbon monoxide standards, except as in (B) below.

(B) the linear regression line in (i) may exceed the standard provided that no data point exceeds the standard.

(C) the hydrocarbon and carbon monoxide data from the 4,000 mile test point of the emission data vehicle shall be multiplied by the deterioration factor computed by dividing the interpolated 100,000 mile point by the interpolated 4,000 mile point. These values shall not exceed the appropriate 100,000 mile hydrocarbon and carbon monoxide standards.

(iii) Compliance with the oxides of nitrogen standard for Options 1 and 2 shall be determined as follows:

(a) the interpolated 4,000 and 100,000 mile points on the linear regression line in (i) shall not exceed the appropriate 100,000 mile oxides of nitrogen standard except as in (b) below.

(b) the linear regression line in (i) may exceed the standard provided that no data point exceeds the standard.

(c) the oxides of nitrogen data from the 4,000 mile test point of the emission data vehicle shall be multiplied by the deterioration factor computed by dividing the interpolated 100,000 mile point by the interpolated 4,000 mile point. These values shall not exceed the appropriate 100,000 mile oxides of nitrogen standard.

All references in these test procedures to "useful life, " 5 years, and 50,000 miles shall mean "total life," 10 years, and 100,000 miles, respectively, except in subparagraph (ii).

b. Only the following scheduled maintenance shall be allowed under subparagraph 86.078.25(a)(1)(i).

25(a)(1)(i)(A) Option 1. For 1981 and later model gasoline or diesel-fueled vehicles, maintenance shall be restricted to the inspection, replacement, cleaning, adjustment, and/or service of the following items at intervals no more frequent than indicated.

(1) Drive belt tension on engine accessories (30,000 miles).
(2) Valve lash (15,000 miles).
(3) Spark plugs (30,000 miles).
(4) Air filter (30,000 miles).
(5) Exhaust gas sensor (30,000 miles); Provided that an audible and/or visible signal approved by the Executive Officer alerts the vehicle operator to the need for sensor maintenance.
(6) Choke, cleaning or lubrication only (30,000 miles).
(7) Idle speed (30,000 miles).
(8) Fuel Filter (30,000 miles).
(9) Injection timing (30,000 miles).

25(a)(1)(i)(B) Option 2. For 1981 and later model gasoline or diesel-fueled vehicles, maintenance shall be restricted to the inspection, replacement, cleaning, adjustment, and/or service of the following items at intervals no more frequent than indicated:

(1) Drive belt tension on engine accessories (30,000 miles).
(2) Valve lash (15,000 miles).
(3) Spark plugs (30,000 miles).
(4) Air filter (30,000 miles).
(5) Fuel filter (30,000 miles).
(6) Idle speed (30,000 miles).
(7) Injection timing (30,000 miles).

(iii) In addition, adjustment of the engine idle speed (curb idle and fast idle), valve lash, and engine bolt torque may be performed once during the first 5,000 miles of scheduled driving, provided the manufacturer makes a satisfactory showing that the maintenance will be performed on vehicles in use.

c. The manufacturer agrees to apply to vehicles certified under this paragraph the provisions of Section 43204 of the California Health and Safety Code for a period of ten year or 100,000 miles, whichever first occurs.

8. For all emission standards options, any vehicle which is subject to a standard set by federal law or regulation controlling emissions of particulate matter must conform to such standard.

State of California

Memorandum

To : Huey D. Johnson
Secretary
Resources Agency
1416 - 9th Street
Sacramento, CA 95814

Date : December 29, 1980

Subject: Filing of Notice of Decision of the Air Resources Board

From : **Air Resources Board**

Pursuant to Title 17, Section 60007(b), and in compliance with Air Resources Board certification under section 21080.5 of the Public Resources Code, the Air Resources Board hereby forwards for posting the attached notice of decision and response to environmental comments raised during the comment period.

Sally Rump
BOARD SECRETARY

att: Resolution 80-58
Resolution 80-59
Resolution 80-60

RECEIVED BY
Office of the Secretary

DEC 30 1980

Resources Agency of California

State of California
AIR RESOURCES BOARD

Response to Significant Environmental Issues

Item: PUBLIC HEARING TO CONSIDER CONFIRMATION OF AMENDMENTS TO TITLE 13, CALIFORNIA ADMINISTRATIVE CODE, REGARDING THE 1982 AND SUBSEQUENT MODEL YEAR EXHAUST EMISSION STANDARDS.

Agenda Item No: 80-25-2 (Resolution No. 60)

Public Hearing Date: December 2, 1980

Response Date: December 2, 1980

Issuing Authority: Air Resources Board

Comment: No comments were received identifying any significant environmental issues pertaining to this item. The staff report identified no adverse effects.

Response: N/A

CERTIFIED: Sally Rump
Board Secretary

Date: 12/29/80

RECEIVED BY
Office of the Secretary
DEC 30 1980
Resources Agency of California

State of California
AIR RESOURCES BOARD

Resolution 80-60

December 2, 1980

Agenda Item No. 80-25-2

WHEREAS, Section 39601 of the Health and Safety Code authorizes the Air Resources Board to adopt standards, rules and regulations necessary for the proper execution of the powers and duties granted to and imposed upon the Board by law; and

WHEREAS, Section 43000(e) of the Health and Safety Code states that emission standards applied to new motor vehicles are standards with which all new motor vehicles shall comply; and

WHEREAS, Sections 43101 and 43104 of the Health and Safety Code authorize the Board to adopt vehicle emission standards and test procedures in order to control or eliminate air pollution caused by motor vehicles; and

WHEREAS, the federal Environmental Protection Agency (EPA) has adopted particulate emission standards for 1982 and subsequent model year diesel-fueled light-duty vehicles and light-duty trucks, which standards are applicable to vehicles sold in California; and

WHEREAS, the Board finds that control of particulate emissions is necessary to protect the public health and achieve federal and state ambient air quality standards; and

WHEREAS, the Board finds that insufficient information is now available to enable it to establish an independent California emission standard for particulate matter; and

WHEREAS, the California Environmental Quality Act and Board regulations require that no project having adverse environmental impacts be adopted as originally proposed if feasible alternatives or mitigation measures are available; and

WHEREAS, an emergency public hearing has been held in accordance with the provisions of the Administrative Procedure Act (Government Code, Title 2, Division 3, Part 1, Chapter 4.5); and

RECEIVED BY
Office of the Secretary

DEC 30 1980

Resources Agency of California

State of California
AIR RESOURCES BOARD

Resolution 80-62

October 22, 1980

WHEREAS, Health and Safety Code Section 40451 authorizes the Air Resources Board (the "Board") to review any action or refusal to take action by the South Coast Air Quality Management District upon appropriate petition by an aggrieved party, and further authorizes the Board to find such action or refusal to act by the District consistent or inconsistent with the purposes of Division 26 of the Health and Safety Code;

WHEREAS, Health and Safety Code Section 40451 provides that if the action of the District was inconsistent with the purposes of Division 26 of the Health and Safety Code, the Board may direct the District to take appropriate remedial action, or may take such action itself, or may refer the matter to any other state agency having jurisdiction, or may take any combination of these actions, and further provides that in taking such action, the Board is vested with all the powers of the District board;

WHEREAS, the Board on May 24, 1978, in Resolution 78-30, adopted an ambient air quality standard of 0.01 parts per million averaged over 24 hours for vinyl chloride, and made a finding that any ambient concentration of vinyl chloride in excess of that amount constitutes an endangerment to the public health (Title 17, California Administrative Code Section 70200.5);

WHEREAS, the South Coast Air Quality Management District ("SCAQMD") has adopted Rule 1005.1 to control vinyl chloride emissions and to achieve and maintain the ambient air quality standard for vinyl chloride set by the Board;

WHEREAS, the B.F. Goodrich Company, a company producing vinyl chloride and operating a plant within the jurisdiction of the SCAQMD, has petitioned the Board to review District Rule 1005.1, and to repeal that Rule or cause the District to repeal it;

WHEREAS, the Executive Officer of the District has adopted an enforcement protocol listing conditions under which it will issue notices of violation;

WHEREAS, the staff of the SCAQMD has stated its intention to work with B.F. Goodrich in implementation of the rule;

WHEREAS, the Board has held a public hearing to consider Rule 1005.1 and B.F. Goodrich's petition in accordance with law;

WHEREAS, the Board finds:

1. Rule 1005.1 is a reasonable measure to insure attainment and maintenance of the state ambient air quality standard for vinyl chloride;

2. Compliance with requirements of the rule is technologically feasible;

3. The provisions of the rule, particularly in light of the enforcement protocol adopted by the Executive Officer of the SCAQMD, are sufficiently definite to afford affected parties requisite notice of what conduct is proscribed and what conduct is permitted under the rule;

4. The rule is within the statutory authority of the SCAQMD;

5. The rule was adopted in accordance with all applicable procedural requirements.

WHEREAS, the Board finds Rule 1005.1 to be fully consistent with the purposes and requirements of Division 26 of the Health and Safety Code.

NOW, THEREFORE, BE IT RESOLVED, that the Board denies the petition of the B.F. Goodrich Company that it repeal, or cause the District to repeal, Rule 1005.1; and

BE IT FURTHER RESOLVED, that the SCAQMD is encouraged to give to B.F. Goodrich any guidance Goodrich may request in its efforts to comply with the provisions of Rule 1005.1.

I certify that the above is
a true and correct copy of
Resolution 80-62, as adopted
by the Air Resources Board

Sally Rump

Sally Rump, Board Secretary

State of California
AIR RESOURCES BOARD

Resolution 80-63

October 22, 1980

WHEREAS, the Air Resources Board("Board") and the Environmental Protection Agency have established health-based ambient air quality standards for oxidant and ozone, respectively, and these standards are frequently exceeded in several of the State's air basins;

WHEREAS, Health and Safety Code Sections 39003, 39500, 39602, and 41500 authorize the Board to coordinate, encourage, and review efforts to attain and maintain state and national ambient air quality standards;

WHEREAS, Health and Safety Code Sections 39600 and 39605 authorize the Board to do such acts as may be necessary to execute the powers and duties granted to and imposed upon the Board, to assist the air pollution control districts;

WHEREAS, the suggested control measure for the control of emissions of perchloroethylene (perc) from the dry cleaning industry was developed by the Bay Area Air Quality Management District staff with the concurrence of the Board staff, and has been approved under the Suggested Control Measure Development Process, by a technical review group consisting of representatives of EPA, ARB, BAAQMD, SCAQMD and several other air pollution control districts;

WHEREAS, the California Environmental Quality Act and Board regulations require that the Board not take any action which would have adverse environmental impacts unless the Board responds to all significant environmental issues raised and takes all feasible measures to mitigate such impacts;

WHEREAS, the Board has held a duly noticed public meeting on this matter, and has heard and considered the comments presented by representatives of the ARB, districts, affected industries, and other interested persons and agencies; and

WHEREAS, the Board finds:

That the emissions of perchloroethylene, a photochemically reactive organic compound, from the dry cleaning industry contribute to violations of the state and national ambient air quality standards for oxidant and ozone in several of the State's air basins;

That perc emissions from certain dry cleaning operations can be reduced by up to 90 percent of the present uncontrolled emission rate by the means set forth in the suggested control measure;

That these emission reductions, together with other operational requirements of the suggested control measure, can reduce the present (overall) uncontrolled emission rate from this source by up to 50 percent or more;

That the direct customer cost of air pollution controls for perc are estimated to add 1 percent or less to the overall cost of dry cleaning, and in the worst case, i.e., for very small dry cleaners, the incremental cost increase is expected to be 2-3 percent or less;

That the emission reductions required by the measure are technologically feasible, economically reasonable, and cost-effective;

That a performance-based, i.e. mileage type, emission control approach can offer specific advantages and disadvantages as compared to an explicit emission approach;

That a performance-based approach is potentially capable of accomplishing equivalent emission reductions to an explicit emission limitation approach, and is potentially compatible with an explicit emission control approach;

That there are no significant adverse effects on air quality or the environment likely to result from adoption and implementation of the suggested control measure;

That the suggested control measure addresses dry cleaning emissions of perchloroethylene only as a photochemically reactive organic compound; the Air Resources Board at this time is reviewing evidence concerning perchloroethylene as a potentially toxic, hazardous, or carcinogenic pollutant to determine if there is a need for additional emissions reductions; and

That in view of EPA's proposal to designate perchloroethylene for additional state regulation of existing sources pursuant to Section 111 of the Clean Air Act (44 Federal Register 39678, June 11, 1980) all districts which propose to amend or adopt a rule to control perchloroethylene emissions from dry cleaning operations are advised to consider and to include in the rule any provisions necessary and appropriate for compliance with Section 111 of the Clean Air Act and EPA regulations contained in Title 40 Code of Federal Register Part 60.

NOW, THEREFORE BE IT RESOLVED, that the Board endorses the suggested control measure for the control of perchloroethylene emissions from the dry cleaning industry approved by the suggested control measure technical review group as set forth in Attachment A to this Resolution, subject to consideration in light of all appropriate evidence by the technical review group of amendments to the suggested control measure relating to the following issues:

1. Deletion of the exemption for coin-operated facilities;

2. Addition of a provision requiring proper disposal of hazardous wastes containing perchloroethylene;

3. Evaluation of size cutoffs, including consideration of performance-based emission standards and base year.

BE IT FURTHER RESOLVED, that the Executive Officer is delegated the authority to endorse the actions of the technical review group on the above issues or to bring them before the Board for further consideration.

BE IT FURTHER RESOLVED, that following endorsement of any amendments to the suggested control measure approved by the technical review group, the Executive Officer is directed to forward the suggested control measure to districts which need reductions in photochemically reactive organic compound emissions to achieve and maintain state or national ambient air quality standards, with a recommendation that these districts consider adoption of the suggested control measure or a rule of equivalent effectiveness.

I certify that the above is
a true and correct copy of
Resolution 80-63, as adopted
by the Air Resources Board

Sally Rump

Sally Rump, Board Secretary

Suggested Control Measure for the Control of Volatile Organic Compound Emissions From Perchloroethylene Dry Cleaning Operations

I. Effective 60 days after adoption a person shall not operate any dry cleaning equipment which uses perchloroethylene unless all of the following requirements are satisfied:

A. Any solvent liquid or solvent vapor leaks shall be repaired immediately.

B. The residue from a solvent still shall not contain more than 0.6 kg. of solvent per kg. of wet waste.

C. The used filtration cartridges shall be put in the filter housing and drained there for at least 24 hours before being discarded or for at least 12 hours provided that they are dried in a closed container which is vented to a control device approved by the APCO.

D. The used diatomaceous earth filters shall be cooked or treated so that the residue contains no more than 0.25 kg. of solvent per kg. of wet waste.

E. Any other filtration or distillation system can be used if it can be demonstrated to the satisfaction of the APCO that it reduces waste losses below 0.01 kg. per kg. of clothes.

F. The waste containing perchloroethylene shall be stored in sealed containers.

II. Emission Control Requirements: A person shall not operate any dry cleaning equipment which uses perchloroethylene unless one of the following requirements is satisfied:

A. All exhaust gases from drying tumblers and cabinets are vented through a carbon adsorber or other control device which reduces the total emissions of organic compounds to the atmosphere during the entire cycle by at least 90 percent by weight; or

B. All of the exhaust gases from drying tumblers and cabinets are vented through a carbon adsorber or other control device which reduces the total emissions of organic compounds to the atmosphere during the entire drying cycle to 100 ppm before dilution.

The effective date for this Section II shall be as follows:

1 year after adoption - for any plant which consumes more than 4000 liters (1060 gallons) of perchloroethylene per year.

2 years after adoption - for any plant which consumes more than 2000 liters (530 gallons) of perchloroethylene per year.

3 years after adoption - for any plant which consumes more than 1200 liters (320 gallons) of perchloroethylene per year.

III. COMPLIANCE SCHEDULE

Compliance Schedule for Section III: A person subject to the requirements of Section II shall comply with the following increments of progress:

A. Submit a control plan on or before 6 months after the date of adoption.

B. Submit a complete application for any required authority to construct at least 6 months before the effective date for that plant.

C. Complete construction or installation of the required emission control equipment on or before the effective date for that plant.

IV. EXEMPTIONS

A. Coin Operated Facilities: The provisions of Section II shall not apply to coin operated cleaning plants.

B. Other Solvents: This Rule does not apply to dry cleaning plants which do not use perchloroethylene.

C. Small Users: The provisions of Section II shall not apply to dry cleaning plants which consume less than 1200 liters (320 gallons) of perchloroethylene per year.

D. Space and Steam Limitations: The provisions of Section II shall not apply to dry cleaners which satisfy one of the following conditions:

Memorandum

To : Huey D. Johnson
Resources Agency
1416 - 9th Street, 13th Floor
Sacramento, CA 95814

Date : November 17, 1980

Subject : Filing of Notice of Decision of the Air Resources Board

From : **Air Resources Board**

Pursuant to Title 17, Section 60007(b), and in compliance with Air Resources Board certification under section 21080.5 of the Public Resources Code, the Air Resources Board hereby forwards for posting the attached notice of decision and response to environmental comments raised during the comment period.

Sally Rump

Sally Rump
BOARD SECRETARY

attachments:
[redacted]
Resolution 80-67

State of California

Memorandum

To : Sally Rump
Board Secretary

Date : November 4, 1980

Subject : SCM to Control Perc Emissions from Drycleaning Industry - Response to Environmental Issues

From : **Air Resources Board**

The response to significant environmental issues adopted by the Board on the above-matter October 22, 1980, was predicated on certain changes being made to the suggested control measure as outlined in the Board's resolution (bottom of p.2). In the event these changes are not in fact made, the aforementioned response to significant environmental issues may no longer be valid and may require amendment.

David Nawi

David Nawi
General Counsel

State of California
AIR RESOURCES BOARD

Response to Significant Environmental Issues

Item: PUBLIC MEETING TO CONSIDER SUGGESTED CONTROL MEASURE FOR THE CONTROL OF VOLATILE ORGANIC EMISSIONS FROM PERCHLOROETHYLENE DRY CLEANING

Public Hearing Date: September 25 and October 22, 1980

Response Date: October 22, 1980

Comment: The suggested control measure may increase the amount of solid toxic waste material produced by dry cleaners and require additional regulation of toxic and solid waste disposal sites.

Response: The suggested control measure is expected to increase perchloroethylene (perc) solvent recapture in dry cleaning operations, and correspondingly to decrease the amount of perc used and the amount of perc waste created. The measure requires that perchloroethylene waste be stored in closed containers. It also requires that the concentration of perc in wastes be reduced prior to disposal. The measure, therefore, will not result in significant adverse environmental effects associated with toxic or hazardous wastes. Additionally, such wastes must be disposed of in accordance with state law and regulations of the Department of Health Services (DHS). DHS establishes minimum standards for the operation and maintenance of hazardous waste disposal sites. The ARB and local air pollution control districts will coordinate implementation and enforcement of this measure with DHS.

Comment: The suggested control measure is expected to increase slightly the amount of wastewater containing perchloroethylene.

Response: The installation of carbon adsorption equipment will require the use of steam to regenerate the carbon bed. The steam condensate from this equipment will be contaminated with a small quantity of perchloroethylene. The relatively low solubility of perchloroethylene in water together with the relatively small amount of water needed for regeneration is not expected to result in substantial release of perchloroethylene into the environment, as compared to the relatively much greater reduction of perchloroethylene release into the environment which will be achieved by installation of the carbon adsorption equipment.

CERTIFIED: Sally Rump
Sally Rump
Board Secretary

DATE: Nov. 10, 1980

State of California
AIR RESOURCES BOARD

Resolution 80-64

November 21, 1980

WHEREAS, the Air Resources Board has been directed to carry out an effective research program in conjunction with its efforts to combat air pollution, pursuant to Health and Safety Code Sections 39700 through 39705;

WHEREAS, a solicited research Proposal Number 948-79 entitled "Alternatives to the Open Burning of Wood Waste from Trees, Vines and Bushes, and Waste from Fruit and Nut Crops and Field Crops Other than Rice" has been submitted by the Battelle Pacific Northwest Laboratories to the Air Resources Board; and

WHEREAS, the Research staff has reviewed and recommended this proposal for approval; and

WHEREAS, the Research Screening Committee has reviewed and recommends for funding:

> Proposal Number 948-79 entitled "Alternatives to the Open Burning of Wood Waste from Trees, Vines and Bushes, and Waste from Fruit and Nut Crops and Field Crops Other than Rice" submitted by the Battelle Pacific Northwest Laboratories for an amount not to exceed $94,000;

NOW, THEREFORE, BE IT RESOLVED, that the Air Resources Board pursuant to the authority granted by Health and Safety Code Section 39703, hereby accepts the recommendation of the Research Screening Committee and approves the following:

> Proposal Number 948-79 entitled "Alternatives to the Open Burning of Wood Waste from Trees, Vines and Bushes, and Waste from Fruit and Nut Crops and Field Crops Other than Rice" submitted by the Battelle Pacific Northwest Laboratories for an amount not to exceed $94,000.

BE IT FURTHER RESOLVED, that the Executive Officer shall initiate administrative procedures and execute all necessary documents and contracts for the research effort proposed in an amount not to exceed $94,000.

I certify that the above is a true and correct copy of Resolution 80-64 as passed by the Air Resources Board.

Sally Rump

Sally Rump
BOARD SECRETARY

State of California
AIR RESOURCES BOARD

ITEM NO: 80-24-3b1
DATE: November ~~13,~~ 21 1980

ITEM: Research Proposal No. 948-79 entitled "Alternatives to the Open Burning of Wood Waste from Trees, Vines and Bushes, and Waste from Fruit and Nut Crops and Field Crops Other than Rice."

RECOMMENDATION: Adopt Resolution 80-64 approving Research Proposal No. 948-79 for funding in an amount not to exceed $94,000.

SUMMARY: The objective of this project is to identify viable alternatives to the open burning of wood waste and the wastes from fruit and nut crops and field crops other than rice. Technologically and economically feasible alternatives, including methods of implementation, are to be identified and fully evaluated.

Four proposals were submitted in response to the Request for Proposals for this study. The proposal submitted by Battelle Pacific Northwest Laboratories was recommended for funding by the staff and by the Research Screening Committee.

Battelle proposed to address each task in the Request for Proposals. The alternatives to be evaluated include production of fiberboard, pulp and paper, hydromulch, energy and fuels, chemicals, compost and controlled burning. The assessment will include an analysis of environmental, public policy, technical and economic factors which will affect the overall feasibility of the alternatives. Technical details to be documented include the basic characteristics of the wastes, mass and energy balances, and engineering flow sheets. Various criteria weightings will be applied to rank the alternatives, with consideration given to both short-term and long-term feasibility.

State of California

Memorandum

To : Mary Nichols, Chairwoman
California Air Resources Board

Date : November 19, 1980

Subject: Mail Ballot

From : **Air Resources Board**

John R. Holmes, Ph.D.
Chief, Research Division

At its October 29, 1980 meeting, the Research Screening Committee recommended three proposals for funding. These were:

1. "Alternatives to the Open Burning of Wood Waste from Trees, Vines, and Bushes, and Waste from Fruit and Nut Crops and Field Crops Other than Rice" by Battelle Pacific Northwest Laboratories, $94,000.

2. Scope Expansion of Contract A8-127-31, "Emission Characteristics of Primary Oil Production Operations in California" by KVB, $75,000.

3. "Correlative and Sensitive Discriminants for Air Quality Control (Combination of O_3/NO_2)" by Professional Staff Association of Los Angeles County/University of Southern California, $125,602.

Because of the extreme time constraints during the November hearings on Rule 1135.1, we were unable to present these proposals to the Board for your consideration. With the holiday season coming up, it is extremely important to us and to at least one of the proponents to begin immediately to move these contracts through the appropriate State agencies for their approval. Accordingly, I would appreciate very much your reviewing the attached summaries and associated resolutions as soon as possible. We have attached a mail ballot for your use in indicating your approval or disapproval of these proposed research projects. We will need to confirm the results of the mail ballot at the next public meeting of the Board.

If you have questions regarding any of these projects or require further information, please feel free to call me. Thank you very much for your assistance in this matter.

Attachments

AIR RESOURCES BOARD BALLOT

1. "Alternatives to the Open Burning of Wood Waste from Trees, Vines, and Bushes, and Waste from Fruit and Nut Crops and Field Crops Other than Rice"

☐ Approved ☐ Disapproved

2. Scope Expansion of Contract A8-127-31, "Emission Characteristics of Primary Oil Production Operations in California"

☐ Approved ☐ Disapproved

3. "Correlative and Sensitive Discriminants for Air Quality Control (Combination of O_3/NO_2)"

☐ Approved ☐ Disapproved

Signature

Date

State of California
AIR RESOURCES BOARD

Resolution 80-65

November 21, 1980

WHEREAS, the Air Resources Board has been directed to carry out an effective research program in conjunction with its efforts to combat air pollution, pursuant to Health and Safety Code Sections 39700 through 39705;

WHEREAS, an unsolicited research Proposal Number 821-69(a) entitled Scope Expansion of Contract A8-127-31 "Emission Characteristics of Primary Oil Production Operations in California" has been submitted by KVB, Inc., to the Air Resources Board; and

WHEREAS, the Research staff has reviewed and recommended this proposal for approval; and

WHEREAS, the Research Screening Committee has reviewed and recommends for funding:

> Proposal Number 821-69(a) entitled Scope Expansion of Contract A8-127-31 "Emission Characteristics of Primary Oil Production Operations in California" submitted by KVB, Inc., for an amount not to exceed $75,000;

NOW, THEREFORE, BE IT RESOLVED, that the Air Resources Board pursuant to the authority granted by Health and Safety Code Section 39703, hereby accepts the recommendation of the Research Screening Committee and approves the following:

> Proposal Number 821-69(a) entitled Scope Expansion of Contract A8-128-31 "Emission Characteristics of Primary Oil Production Operations in California" submitted by KVB, Inc., for an amount not to exceed $75,000.

BE IT FURTHER RESOLVED, that the Executive Officer shall initiate administrative procedures and execute all necessary documents and contracts for the research effort proposed in an amount not to exceed $75,000.

I certify that the above is a true and correct copy of Resolution 80-65 as passed by the Air Resources Board.

Sally Rump

Sally Rump
BOARD SECRETARY

State of California
AIR RESOURCES BOARD

ITEM NO: 80-24-3b2~~1~~
DATE: November ~~13~~, 1980

ITEM: Research Proposal No. 821-69(a) entitled Scope Expansion of Contract A8-127-31 "Emission Characteristics of Primary Oil Production Operations in California."

RECOMMENDATION: Adopt Resolution 80-65 approving Research Proposal No. 821-69(a) for funding in an amount not to exceed $75,000.

SUMMARY: The objectives of this study were: to analyze the character and rates of emissions associated with primary crude oil production operations in California, both on and offshore; to compile, from literature and/or by source testing where necessary, emission factors for the various operations, facilities and equipment; to quantify the emissions from the major primary crude oil production areas in California; and to assess the feasibility and cost of emission control measures.

At this time, about 85 percent of the work required to accomplish the original objectives has been completed and a corresponding amount of the original budget of $250,000 has been expended. The accomplishments include: completion of surveys and equipment counts for representative oil fields and offshore platforms; collection and review of available emission factor data; performance of limited source testing, with emphasis on internal combustion engines and heater treaters; classification of oil fields using field and well characteristics; assembly of a complete count of wells by oil field and county; and development of a computer program to process all of the above data.

This proposal would expand the scope of the original program to include features which would greatly improve the value of the study. The first feature provides for an expanded grouping of oil wells by leasehold. This grouping has a greater influence on the emissions associated with oil production than the geological and formation properties considered in the original proposal because each leaseholder has separate tanks and facilities to process and store the crude oil. If vapor recovery is employed, it is utilized on a leasehold basis, rather than an individual well basis.

A second feature provides for an improved software package which will provide capability to access the DOG data, assemble the individual wells and related information into leases, assign each lease to an appropriate emission model, and calculate the emissions associated with each lease. The emissions information will then be assembled and reported on a field, county, air basin and statewide basis as originally proposed. The modified system would improve the accuracy of the emissions inventory and provide the ARB staff with a capability for update and future projection of the inventory.

The third feature includes tertiary oil production emissions (from oil handling and processing) in the study. These teritary operations include about 3900 wells which are not included in the present Scope of Work.

State of California
AIR RESOURCES BOARD

Resolution 80-66

November 21, 1980

WHEREAS, the Air Resources Board has been directed to carry out an effective research program in conjunction with its efforts to combat air pollution, pursuant to Health and Safety Code Sections 39700 through 39705;

WHEREAS, an unsolicited research Proposal Number 954-79 entitled "Correlative and Sensitive Discriminants for Air Quality Control" has been submitted by the Professional Staff Association of Los Angeles County/USC to the Air Resources Board; and

WHEREAS, the Research staff has reviewed and recommended this proposal for approval; and

WHEREAS, the Research Screening Committee has reviewed and recommends for funding:

> Proposal Number 954-79 entitled "Correlative and Sensitive Discriminants for Air Quality Control" submitted by the Professional Staff Association of Los Angeles County/USC for an amount not to exceed $125,602.

NOW, THEREFORE, BE IT RESOLVED, that the Air Resources Board pursuant to the authority granted by Health and Safety Code Section 39703, hereby accepts the recommendation of the Research Screening Committee and approves the following:

> Proposal Number 954-79 entitled "Correlative and Sensitive Discriminants for Air Quality Control" submitted by the Professional Staff Association of Los Angeles County/USC for an amount not to exceed $125,602.

BE IT FURTHER RESOLVED, that the Executive Officer shall initiate administrative procedures and execute all necessary documents and contracts for the research effort proposed in an amount not to exceed $125,602.

I certify that the above is a true and correct copy of Resolution 80-66 as passed by the Air Resources Board.

Sally Rump

Sally Rump
BOARD SECRETARY

State of California
AIR RESOURCES BOARD

ITEM NO: 80-24-3b3
DATE: November 13, 1980
21

ITEM: Research Proposal No. 954-79 entitled "Correlative and Sensitive Discriminants for Air Quality Control", Professional Staff Association, L.A. County/USC Medical Center, Russell Sherwin.

RECOMMENDATION: Adopt Resolution 80-66 approving Research Proposal No. 954-79 for funding for an amount not to exceed $125,602.

SUMMARY: The proposed study is an extension of work done under ARB sponsorship, employing low levels of NO_2. The extension is to use ozone (O_3) and nitrogen dioxide (NO_2) mixtures, which should lead to health assessments under conditions more nearly similating real atmospheric conditions. Completed efforts consist of the development and application of methods developed for the study of cellular and biochemical indicators of nitrogen dioxide damage at near ambient or ambient concentrations. These methods have been employed in completed and ongoing studies to determine the rates of Type I to Type II pneumocyte conversions and studies of whether such changes are reversible. The importance of such studies lies in the function of the cells under study. The most common cell of the alveolar wall, in terms of area covered, is the Type I cell. It is a very thin cell whose role is the efficient exchange of gases between the atmosphere in the lung and the blood. The Type II cell is noted for its thickness and apparent role in lung defenses, including production of secretions. It appears from completed studies that some Type I cells are converted to Type II cells, even at very low concentrations of NO_2 (0.25 ppm). Such cellular changes are thought to be the early steps in several disease states, including emphysema.

Ongoing and completed studies into sensitive measures of rates of protein leakage into alveolar spaces also indicate increased leakage after exposures to NO_2 at near ambient concentrations. These measurements as well as image analysis of cells would be employed in tests using ozone as well as ozone with NO_2. Leakage into the alveolar spaces has also been observed on a gross level (edema) following acute exposures to certain other air pollutants. The final study areas to be continued and expanded upon with the ozone and combined ozone-NO_2 mixtures would be a study of the subcellular structures known as mitochondria and lamellar bodies.

State of California
AIR RESOURCES BOARD

Resolution 80-67

November 5, 1980

WHEREAS, the Air Resources Board ("Board") and/or the federal Environmental Protection Agency have established health-based ambient air quality standards for nitrogen dioxide, oxidant (ozone), particulate matter (TSP), and visibility which are consistently exceeded in several of the State's air basins, notably the South Coast Air Shed;

WHEREAS, Health and Safety Code Sections 39003, 39500, 39602, and 41500 authorize the State Board to coordinate, encourage, and review efforts to attain and maintain state and national ambient air quality standards;

WHEREAS, Health and Safety Code Sections 39600 and 39605 authorize the State Board to do such acts as may be necessary to execute the powers and duties granted to and imposed upon the State Board, to assist the air pollution control districts, and to hold public hearings;

WHEREAS, a suggested control measure for the control of emissions of oxides of nitrogen (NOx) from glass melting furnaces was drafted by the Board staff and has been approved under the Suggested Control Measure Development Process by a technical review group consisting of representatives of Environmental Protection Agency, Air Resources Board, and several air pollution control districts;

WHEREAS, the California Environmental Quality Act and Air Resources Board regulations require that an activity not be adopted as proposed unless feasible mitigation measures or alternatives which would substantially reduce any significant adverse environmental effects of the proposed activity are considered, and further require that the Board respond in writing to significant environmental issues raised;

WHEREAS, the Board has held a public meeting on this matter, and has heard and considered the evidence and comments presented by the ARB staff, affected industries, and other interested persons and agencies; and

WHEREAS, the Board finds:

1. That emissions of oxides of nitrogen (NOx) from glass melting furnaces contribute significantly to violations of the state and national ambient standards for nitrogen dioxide (NO_2), TSP, and visibility in several of the state's air basins;

2. That such NOx emissions are not currently subject to air pollution control regulations;

3. That the evidence suggests that the energy penalty associated with the control measure is insignificant and that this energy penalty has been taken into consideration by the Board, along with other costs, when assessing the cost effectiveness of the suggested control measure;

4. That it is technologically feasible and cost effective to reduce emissions to one-half their present rates through the use of combustion modifications and process changes;

5. That the staff report adequately responds to other environmental issues raised, and the Board concurs in the staff's findings that no significant adverse environmental effects are likely to result from adoption and implementation of the suggested control measure.

NOW, THEREFORE, BE IT RESOLVED, that the Board approves the suggested control measure for the control of emissions of oxides of nitrogen from glass manufacturers, as set forth in Attachment A to this Resolution. The Board requests the technical review group to reconsider the measure to reflect changes suggested by the Board in response to comments and evidence received at public meetings.

BE IT FURTHER RESOLVED, that the Executive Officer is delegated the authority to endorse the actions of the technical review group on the above issues.

BE IT FURTHER RESOLVED, that following endorsement of any amendments to the suggested control measure approved by the technical review group, the Executive Officer is directed to forward the suggested control measure to the South Coast Air Quality Management District and the Ventura County Air Pollution Control District with a recommendation that these districts adopt rules of equivalent effectiveness.

BE IT FURTHER RESOLVED, that the Board recognizes the potential need for an exemption for some existing furnaces, based upon existing physical site limitations, technical limitations or financial constraints.

BE IT FURTHER RESOLVED, that the Executive Officer is directed to provide assistance to any district requesting assistance in adopting, interpreting, or implementing the suggested control measure.

BE IT FURTHER RESOLVED, that if significant adverse environmental effects become apparent before or during operation of the control equipment utilized to comply with this suggested control measure once it is adopted into regulatory form the adopting districts, with the assistance of the Board should they desire it, should consider the adoption of mitigation measures or other appropriate action to reduce such adverse impacts, and are encouraged to request the Board's assistance.

I certify that the above is
a true and correct copy of
Resolution 80-67, as adopted
by the Air Resources Board

Sally Rump

Sally Rump, Board Secretary

Attachment A

Suggested Control Measure to Limit NOx Emissions from Glass Melting Furnaces

A. Emission Limitations

	Emission Limit	Effective Date
New Furnaces	2.0 lb NOx/ton glass pulled	January 1, 1983
Rebuilt Furnaces		Next furnace rebuild starting January 1, 1983 All furnaces must comply by January 1, 1987
- producing $\leq$ 200 T/D	4.0 lb NOx/ton glass pulled	
- producing between 200 T/D and 300 T/D	[[-0.015 (T/D)] + 7 lb NOx]/ ton glass pulled	
- producing $\geq$ 300 T/D	2.5 lb NOx/ton glass pulled	

Emission Limit X A = Cogeneration Based Emission Limit

$$A = \frac{\text{Heat Input (Btu/hr)} + \text{Electricity Cogenerated (Btu/hr)}}{\text{Heat Input (Btu/hr)}}$$

Heat input shall be based on the higher heating value of the fuel

All emission determinations shall be in the "as found" condition, at any production rate other than idle. For purposes of this control measure, idle shall be defined as a glass pullrate of less than 10 percent of the district maximum permitted production rate.

Averaging time for compliance determination shall be three hours.*

The NOx emission limit shall be calculated as NO_2.

Manufacturers subject to this control measure shall submit a furnace rebuild schedule to the air pollution control officer by January 1, 1982, which delineates furnace rebuild timetables.

* The glass manufacturer may also choose one of the following options for purposes of compliance determination:

1. Six hours with no peak NOx emission rate to exceed 25 percent of the six hour average; or
2. 24 hours with the use of in-plant continuous monitoring. Such monitoring equipment shall be operated in accordance with conditions specified by the Air Pollution Control Officer.

Exemptions

-- Furnaces that are limited to 15 lbs/hr. of NOx by district permit conditions.

-- Glass remelt facilities that exclusively utilize glass cullet, marbles, chips, or similar feedstocks in lieu of basic (and/or traditional) glass making raw materials.

-- Glass tableware furnaces, SIC code 3229.1.

-- Flat glass melting furnaces.

B. Technology Review

After July 1, 1982, and before January 1, 1983, the Air Resources Board in conjunction with the South Coast Air Quality Management District, or their delegates, shall conduct a public hearing to determine the technological and economic feasibility of meeting an emissions limit on a furnace specific basis to be effective upon furnace rebuild, starting January 1, 1983, with all furnaces complying by January 1, 1987, of 2.0 lb NOx, or less, per ton of glass pulled.

Memorandum

To : Huey D. Johnson
Resources Agency
1416 - 9th Street, 13th Floor
Sacramento, CA 95814

Date : November 17, 1980

Subject : Filing of Notice of Decision of the Air Resources Board

From : **Air Resources Board**

Pursuant to Title 17, Section 60007(b), and in compliance with Air Resources Board certification under section 21080.5 of the Public Resources Code, the Air Resources Board hereby forwards for posting the attached notice of decision and response to environmental comments raised during the comment period.

Sally Rump

Sally Rump
BOARD SECRETARY

attachments:
Resolution 80-63
[redacted]

State of California
AIR RESOURCES BOARD

Response to Significant Environmental Issues

Item: Public Meeting to Consider Suggested Control Measure for the Control of Oxides of Nitrogen Emissions from Glass Melting Furnaces

Agenda Item No: 80-21-2, 80-22-1

Public Hearing Date: October 23, 1980, continued to November 5, 1980

Response Date: November 5, 1980

Issuing Authority: Air Resources Board

Comment: Ammonia may be emitted in significant amounts due to some of the emission control equipment.

Response: Proper operation of such emission control equipment will limit ammonia breakthrough to less than 20 ppm. Ammonia emissions at these low levels are not expected to cause adverse effects.

Comment: Some of the emission control techniques will result in an energy penalty.

Response: These energy impacts are insignificant and justified by the benefits associated with the control measure.

CERTIFIED: Sally Rump
Board Secretary

Date: 11/14/80

State of California
AIR RESOURCES BOARD

Resolution 80-68

December 18, 1980

WHEREAS, Health and Safety Code Section 39003 provides that the Air Resources Board (the "Board") is the state agency charged with coordinating efforts to attain and maintain ambient air quality standards;

WHEREAS, Health and Safety Code Section 39002 provides that local and regional authorities have the primary responsibility for control of air pollution from all sources other than vehicular sources, and provides further that the Board shall undertake control activities in any area wherein it determines that the local or regional authority has failed to meet the responsibilities given to it by Division 26 of the Health and Safety Code or any other provision of law;

WHEREAS, Health and Safety Code Section 39500 provides that it is the intent of the Legislature that the Board shall coordinate, encourage and review the efforts of all levels of government as they affect air quality;

WHEREAS, Health and Safety Code Section 39600 provides that the Board shall do such acts as may be necessary for the proper execution of the powers and duties granted to, and imposed upon, the Board by Division 26 of the Health and Safety Code and by any other provision of law;

WHEREAS, Health and Safety Code Section 39602 designates the Board as the air pollution control agency for all purposes set forth in federal law; and provides further that the Board is responsible for preparation of the state implementation plan required by the Clean Air Act, and to this end shall coordinate the activities of all districts necessary to comply with that Act;

WHEREAS, Health and Safety Code Section 39605 provides that the Board may provide any assistance to any district;

WHEREAS, Health and Safety Code Section 40001 provides that the local districts shall adopt and enforce rules and regulations which assure that reasonable provision is made to achieve and maintain the state ambient air quality standards and shall also endeavor to achieve and maintain the federal ambient air quality standards;

WHEREAS, Health and Safety Code Section 40440, as presently in effect and as amended effective January 1, 1981, requires that the rules and regulations of the South Coast Air Quality Management District reflect the best available technological and administrative practices;

WHEREAS, Health and Safety Code Section 40462, as presently in effect and as amended effective January 1, 1981, requires that the South Coast Air Quality Management Plan provide for achievement of state ambient air quality standards at the earliest date achievable by application of all reasonable and available (or reasonably available) control measures and technologies;

WHEREAS, Health and Safety Code Section 40451 provides that on petition from any aggrieved person, the Board shall review any action or failure to act of the South Coast Air Quality Management District ("SCAQMD") Board of Directors, and provides further that if the Board finds that the action or inaction of the SCAQMD Board is inconsistent with the purposes of Division 26 of the Health and Safety Code, the Board may, inter alia, take appropriate action to implement and effectuate the purposes of Division 26;

WHEREAS, Section 107(a) of the Clean Air Act provides that it is the responsibility of each state to assure air quality within the entire geographic area of the state;

WHEREAS, Section 110(a)(1) of the Clean Air Act requires that each state adopt a plan which provides for the implementation, maintenance and enforcement of national primary ambient air quality standards within each air quality control region of the state;

WHEREAS, Section 110(a)(2) of the Clean Air Act requires that such plan provide for the attainment of such standards as expeditiously as practicable;

WHEREAS, Section 172(a)(1) of the Clean Air Act requires that an implementation plan for nonattainment areas provide for the attainment of national primary ambient air quality standards as expeditiously as practicable and no later than December 31, 1982;

WHEREAS, Section 172(b)(2) of the Clean Air Act requires the implementation of all reasonably available control measures as expeditiously as practicable;

WHEREAS, Section 172(b)(3) of the Clean Air Act requires that such nonattainment area plans require reasonable further progress (as defined in section 171(1)) including such reduction in emissions from existing sources in the area as may be obtained through the adoption, at a minimum, of reasonably available control technology;

WHEREAS, Health and Safety Code Section 41650 provides that the Board shall adopt the nonattainment area plan approved by a designated air quality planning agency as part of the state implementation plan unless the Board finds that the nonattainment area plan will not meet the requirements of the Clean Air Act;

WHEREAS, the California Environmental Quality Act and Board regulations require that an action not be adopted as proposed if significant environmental impacts have been identified and there exist within the jurisdiction of the Board feasible mitigation measures or alternatives which would substantially lessen, mitigate or avoid such impacts;

WHEREAS, in February 1978, the SCAQMD Board adopted Rule 475.1, pertaining to control of emissions of oxides of nitrogen (NOx) from power plants;

WHEREAS, the Southern California Edison Company ("SCE") and the Los Angeles Department of Water and Power ("LADWP") petitioned the Board pursuant to Health and Safety Code Section 40451 to review SCAQMD Rule 475.1;

WHEREAS, at hearings held from May to August 1978, the Board reviewed Rule 475.1 pursuant to Health and Safety Code Sections 40451 and 41504;

WHEREAS, on August 7, 1978, the Board adopted Resolution 78-48, in which it found Rule 475.1 to be inconsistent with the purposes of Division 26 for specified reasons, and in which it also found that:

The level of oxides of nitrogen emissions reduction required by Rule 475.1 is necessary to attain and maintain the federal and state ambient air quality standards for nitrogen dioxide, total suspended particulate matter, and visibility; and

The level of oxides of nitrogen emissions reduction required by Rule 475.1 is also likely to result in a net air quality benefit by causing reductions in peak ambient oxidant levels in the SCAQMD.

WHEREAS, the Board in Resolution 78-48 adopted amendments to Rule 475.1;

WHEREAS, in response to a petition for reconsideration filed by the SCAQMD, the Board on January 23, 1979, in Resolution 79-2, reaffirmed its decision adopting Resolution 78-48, and affirmed Rule 475.1 as adopted by its Executive Officer January 22, 1979, subject to such revisions as might be made by the SCAQMD consistent with the District's views expressed before the Board January 23, 1979;

WHEREAS, the SCAQMD did not adopt any changes to the Rule, but rather, by letter of its Executive Officer dated September 21, 1979, recommended that the Board hold hearings and adopt any amendments to the Rule;

WHEREAS, the Board, following notice and hearings held in January and March 1980, on March 27, 1980, adopted Resolution 80-22 in which it amended Rule 475.1 and recodified the Rule as Rule 1135.1;

WHEREAS, SCE petitioned the Board to reconsider Rule 1135.1 (475.1);

WHEREAS, the Board granted SCE's petition for reconsideration;

WHEREAS, public hearings have been held and the Board has considered all aspects of Rule 1135.1 and has received and considered the evidence presented to it;

WHEREAS, as specifically set forth in the Statement of Findings and Response to Opposing Considerations adopted herewith and made a part of this Resolution, the Board finds:

That the provisions of Rule 1135.1 as amended are technologically feasible and cost-effective;

That the provisions of Rule 1135.1 as amended are necessary to meet the requirements of the Clean Air Act;

That the provisions of Rule 1135.1 as amended assure that reasonable provision is made to achieve state ambient air quality standards;

That the provisions of Rule 1135.1 as amended are appropriate to implement and effectuate the purposes of Division 26 of the Health and Safety Code; and

That the provisions of Rule 1135.1 as amended reflect the best available technological and administrative practices.

WHEREAS, the Board further finds, in accordance with the requirements of CEQA and as set forth in detail in the Response to Significant Environmental Issues incorporated by reference herein:

That all adverse environmental effects found to be significant by the Board can be mitigated by the utilities pursuant to cost-effective operating procedures, are being minimized by improved catalyst design, or are within the jurisdiction of other public agencies which are currently regulating the activities generating such effects so as to mitigate any anticipated adverse impacts on the environment; and

That alternatives considered are either less effective in reducing NOx emissions and protecting public health and welfare, or are economically infeasible due to excessive increased costs to the utilities.

NOW, THEREFORE BE IT RESOLVED, that the Board amends SCAQMD Rule 1135.1 as set forth in Attachment A hereto.

BE IT FURTHER RESOLVED, that it is appropriate that the SCAQMD consider the adoption of regulations which provide for reductions in NOx emissions from power plants within the South Coast Air Basin not subject to Rule 1135.1.

BE IT FURTHER RESOLVED, that the Executive Officer is directed to transmit Rule 1135.1 as amended to the Environmental Protection Agency for inclusion in the California State Implementation Plan.

I certify that the above is a true and correct copy of Resolution 80-68, as adopted by the Air Resources Board.

Sally Rump

BOARD SECRETARY

Attachment A

Rule 1135.1 of the South Coast Air Quality Management District as Amended by the California Air Resources Board

December 18, 1980

I. Applicability

This rule shall apply to any electric utility with a system of electric generating units the total rated capacity of which is more than 500 megawatts.

II. Definitions

Available units are those electric generating units in the system which, except during periods of regularly scheduled maintenance, can be operated without incurring more than the normally acceptable risk to the system, unit, or personnel, and for which fuel can be supplied for at least the next day's operation.

Baseline emissions are emissions of oxides of nitrogen expressed in pounds of oxides of nitrogen (as nitrogen dioxide, NO_2) per hour at each of ten load points of equal increments from minimum load to 100 percent load for each unit of a utility as tested by the utility and as reported to the Executive Officer in 1979. In the case of units for which no such report was submitted in 1979, each affected utility shall submit to the Executive Officer source test data which show oxides of nitrogen (NOx) emission rates for 1979 at the load points specified herein.

Rated capacity is, for any electric generating unit, the lesser of the manufacturer's name-plate capacity in megawatts for the unit; or the capacity in megawatts to which a unit is restricted by a condition on the electric generating unit's permit to operate.

Steam generated electric capacity is the total rated electric capacity, as of January 1, 1978, of all units which produced electricity from electric generators driven by steam turbines located within the South Coast Air Basin. Steam generated electric capacity does not include electric generating capacity of simple or combined cycle gas turbine units.

III. Requirement for Least NOx Dispatch

A. The owner or operator of an electric power generating system shall at all times operate the available units in the system in a manner that minimizes the rate of emissions of oxides of nitrogen from the system ("least NOx dispatch"). Simple cycle gas turbines are exempted from the least NOx dispatch requirements.

B.1. A plan detailing the method for meeting the requirements in subsection III.A. shall be submitted to the Executive Officer for consideration no later than March 1, 1981. Within 60 days of receipt of such a plan, the Executive Officer shall approve or disapprove the plan. In the event the plan is disapproved, the Executive Officer shall notify the affected utility in writing, and shall state the grounds for the disapproval. Within 30 days of such notification, the affected utility shall submit a revised plan which eliminates the stated grounds of disapproval.

2. A revised plan shall also be submitted to the Executive Officer within 30 days after a new or modified unit is added to the system or a unit is removed from the system. A revised plan submitted when a unit is added to or removed from the system shall be subject to the requirements for review, approval and revision set forth in subsection III.B.1. for the original plan.

C. Effective 30 days after approval by the Executive Officer, the system shall be operated according to the approved plan.

D. Records relating to compliance with this section shall be kept in a manner and form specified by the Executive Officer.

IV. Requirements for Control

A. For a utility with a steam generated electric capacity of more than 500 megawatts and less than 5,000 megawatts:

Any owner or operator of an affected electric power generating system shall limit the emissions of oxides of nitrogen from the steam generators of individual generating units which have an aggregate steam generated electric capacity of at least 910 megawatts to a level not greater than 20 percent of the baseline emissions of each unit controlled. Such limit shall be achieved over the entire operating load range of each unit controlled.

B. For a utility with a steam generated electric capacity of more than 5,000 megawatts:

Any owner or operator of an affected electric power generating system shall limit the emissions of oxides of nitrogen from the steam generators of individual generating units which have an aggregate steam generated electric capacity of at least 1920 megawatts to a level not greater than 20 percent of the baseline emissions of each unit controlled. Such limit shall be achieved over the entire operating load range of each unit controlled.

V. Compliance Schedule

A.1. No later than December 1, 1983, each affected utility shall limit the emissions of one unit with a rated capacity greater than 300 megawatts to the levels specified in section IV, provided that this provision shall not require an affected utility to attain such limit by December 1, 1983 on more than one such unit within its total system.

2. Except for the requirements of subsection V.A.1., all controls necessary to meet the requirements of this rule shall be installed no later than during the first regularly scheduled shutdown after October 1, 1985, for each unit on which controls are to be installed as specified in the compliance plan required by section V.B.

3. All units on which controls are to be installed as specified in the compliance plan required by section V.B. shall be controlled by December 31, 1989.

B. A final compliance plan shall be submitted to the Executive Officer for consideration no later than March 1, 1981. The plan shall contain a list which identifies those units to be controlled and shall include a detailed description of the steps that will be taken to satisfy the requirements of subsections V.A.1., V.A.2, and V.A.3. The description shall contain a construction schedule for each unit on which controls are to be installed. Within 30 days of receipt of such a plan, the Executive Officer shall approve or disapprove the plan. In the event the plan is disapproved, the Executive Officer shall notify the affected utility in writing and state the grounds for the disapproval. Within 30 days of such notification, the affected utility shall submit a revised plan which eliminates the stated grounds for the disapproval.

VI. Review of Rule

Within ninety days after one year's operation on any unit of 300 megawatts or greater capacity of controls installed to achieve the emission reduction required by this rule, and upon request by an affected utility, the District Board shall conduct a hearing to consider the experience gained in meeting the requirements of the rule; and whether further implementation of the rule remains reasonable and necessary to attain the objective of a 90 percent overall reduction in power plant NOx emissions in the South Coast Air Shed. The rule shall remain in effect pending such consideration. Upon request by the District Board, the State Air Resources Board shall conduct the hearing.

VII. Severability

Except as otherwise provided in this Rule, if any portion of this Rule is found to be unenforceable, such finding shall have no effect on the enforceability of the remaining portions of the Rule. These remaining portions of the Rule shall continue to be in full force and effect.

State of California
AIR RESOURCES BOARD

Public Hearing to Reconsider Rule 1135.1 of the South Coast Air Quality Management District and Rule 59.1 of the Ventura County Air Pollution Control District Controlling Emissions of Oxides of Nitrogen from Power Plants

Statement of Findings and Response to Opposing Considerations

The Board has reviewed and considered all of the evidence and arguments presented to it in hearings on these two rules. This document is not intended to be exhaustive. It sets forth formal findings and the principal factors on which these findings rest, as well as a response to significant considerations raised in opposition to the Board's action.

December 18, 1980

1. Finding: Oxides of nitrogen (a mixture of nitric oxide, NO, and nitrogen dioxide, NO_2) are released from a multiplicity of sources that include fossil fueled power plants. Oxides of nitrogen (NOx) are rapidly converted to nitrogen dioxide (NO_2) in the atmosphere, either photochemically or by reaction with ozone (Staff Report,* pp 62-69).

   Basis: This finding is based on the Board's general knowledge of air quality and photochemistry. This issue has not been disputed during this hearing.

2. Finding: Concentrations of NO_2 in the ambient air in the South Coast Air Basin have persistently exceeded both state and national standards for NO_2 and will continue to exceed these standards unless control measures beyond those already existing are implemented.

   Basis: The facts on which this finding is based include the following:

   From 1972 to 1979, ambient concentrations of NO_2 in the South Coast Air Basin exceeded frequently and substantially both the national annual average standard and the state one-hour standard for NO_2 (Staff Report, Table IV. 1, 2, 3, pp 36-38).

   NO_2 concentrations in the South Coast Air Basin are the highest of any major metropolitan area in the world (NOx Abatement for Stationary Sources in Japan, Jumpei Ando, U.S. EPA, August 1979).

   The 1979 Air Quality Management Plan for the South Coast Air Basin projects that NO_2 concentrations will continue to exceed the national annual average standard even if all the control measures identified in the Plan are implemented. Based on the emissions projections contained in the Air Quality Management Plan, it is also expected that the state NO_2 standard will continue to be exceeded (see Finding 4, below).

3. Finding: Oxides of nitrogen emitted by gas and oil fired power plants make a substantial contribution to ground level concentrations of NO_2 in the South Coast Air Shed.

   Basis: The facts on which this finding is based include the following:

   Southern California Edison (SCE) has presented extensive technical information on tracer studies and meteorological analyses that lead it to conclude that stack height, buoyant plume rise and stable atmospheric conditions combine to reduce

*September 19, 1980 ARB Staff Report

substantially the influence of power plant emissions relative to ground level sources of NOx (Tr, Nov. 5, pp 130-155; Nov. 6, 9:30 a.m., pp 1-28; Nov. 6, 10:00 a.m., pp 52-142).

The ARB staff presented information, including the results of tracer releases and supporting meteorological analyses, that lead them to the conclusion that the ground level NO_2 impacts of power plant NOx are often large and contribute significantly to violations of both the hourly and annual average standards for NO_2. (Tr, Nov. 5, 9:15 a.m., pp 6-26; pp 27-36; pp 38-67)

a. Tracer Studies

SCE believes that power plant NOx emissions result in minimal ground level impacts based principally on two SF_6 tracer studies from the El Segundo Generating Station (ESGS). The first study was conducted by North American Weather Consultants on March 6, 7, and 8, 1979 (NAWC Report No. SBAQ-79-11, SCE January 23, 1980 Submittal). Among other conclusions, NAWC stated that "during periods of exceedances of the one-hour 0.25 parts per million (ppm) NO_2 standard, ESGS NOx contributions were at most 11 percent of the observed ambient NOx concentrations at any receptor."

From a series of SF_6 tracer tests made from the El Segundo Generating Station on September 3-5, 1980, SCE concluded that "the plume was diluted in the order of 10^5 - 10^7 times before it had an impact at ground level."

SCE concluded from these data that "the plume contributed a maximum impact of 2.5 parts per billion (ppb) of the (air monitoring) stations 50-100 ppb NOx concentration or a maximum of 5 percent." Although the Board believes SCE's analysis correctly represents the ground level impact of the one generating unit studied, subsequent SCE testimony (SCE Submittal, Nov. 3, 1980, pp 0200-0227; Tr, Nov. 6, 9:30 a.m., pp 7-10; p 27, ln 22, 23) indicated that this plume represents only one of four units in operation at El Segundo. The same testimony indicated that the other units at El Segundo and other large coastal power plants on the Santa Monica Bay are also expected to make significant contributions to the same receptor areas.

Other conclusions reached by SCE from this study are similarly based on the emissions from one unit (one-third of the generating capacity) of the ESGS and must be multiplied by at least a factor of three to represent the emissions from the entire ESGS complex, and by a still larger factor to account for adjacent power stations along the coastline.

Analysis presented by the ARB staff indicated that the additive ground level impacts from just one generating station (El Segundo) was near 20 percent in Lennox during the course of SCE's tests. (Tr, Nov. 6, 9:30 a.m., pp 21-23)

In a series of tests performed by Shair et al., at Haynes/Alamitos (Staff Report, pp 43-44 and Ref. 3) similar, though somewhat lower, dilution factors were measured (1.57×10^4 at Fullerton Fire Station Number Two on one test). Using the measured SF_6 values, the NO_2 impact due solely to the Haynes/Alamitos complex would be as high as .11 and .12 ppm, or nearly 50 percent of the state ambient air quality standard for NO_2 of 0.25 ppm for one hour. Shair also described a tracer study (Tr, Nov. 5, pp 38-47) in which SF_6 was released from the El Segundo Generating Station. The results of this test showed that the NOx emitted during night-time land-breeze conditions is widely spread along the coast, and that essentially all of the NOx is advected back across the shoreline at surface level and added to the following day's NOx burden.

b. Other Field Studies

A number of field studies were considered by the Board during the course of these hearings. For example, ambient measurements carried out in conjunction with the Haynes/Alamitos tracer studies done in 1974 clearly identified elevated ground level concentrations of NOx downwind of the power plant complex (Staff Report, p 44; Fig. IV.4, p 46). At the point of maximum ground level impact, some 9 kilometers downwind, NOx concentrations below the center line of the plume were elevated as much as 0.15 ppm (150 ppb) above the concentrations in areas adjacent to the plume. This finding is consistent with impacts inferred from the results of the tracer studies.

c. Meteorological Analysis

SCE's belief that, because the initial plume rise is at times sufficiently high to penetrate the base of the inversion layer, emissions from high stacks used by the power plants in the South Coast Air Shed prevent any impact on ground level NO_2 concentrations is contradicted by the results of the SF_6 tracer studies described above. SCE's beliefs are also contradicted by the meteorological analyses presented on pages 41-54 of the ARB Staff Report. These analyses show that, on 80 percent of the days, the base of the inversion as measured at Los Angeles International Airport, is at or above the power plant plume height, and that on 16 of the 21 days in the period 1972-1979

when NO_2 concentrations were equal to or greater than 0.45 ppm, the maximum mixing depth was greater than 984 feet. These data show that efficient mixing of the plume down to ground level would be expected on about 80 percent of all days and on 75 percent of those days when NO_2 concentrations are greater than 0.45 ppm. This finding is also supported by the SO_2/CO model study performed by TSC for SCE as interpreted by John Trijonis (John Trijonis, Review of the TSC Report "Impact of Power Plants on Ambient Nitrogen Dioxide in the South Coast Air Basin", May 1980) which shows that as much as 13.2 percent of the ground level NO_2 concentrations is due to NOx emissions from power plant stacks.

This conclusion is further supported by the testimony presented by Professor James Edinger (Tr, Nov. 5, pp 49 ff). Professor Edinger discussed the merging of the inversion layer into the mixing layer over the course of a day and presented data that show the mixing layer is deeper at inland locations where NO_2 maxima generally occur than it is at the shoreline where the power plants emit and where SCE's data on the height of the inversion base were gathered. Dr. Edinger's conclusions were graphically illustrated in a short time-lapse film that showed how pollutants trapped aloft in the inversion layer rapidly mix downward as surface heating occurs.

Another concern of the Board's is that the SCE witnesses have focused on NO_2 exceedances that occur early in the day, typically around 9:00 a.m. However, data presented in the ARB Staff Report (Staff Report, pp 51 and 52) show that the bulk of the NO_2 exceedances occur later in the day, well after the time when surface heating has caused the mixing layer to deepen and has produced the turbulence necessary to mix power plant emissions uniformly down to the ground.

On the basis of these facts -- tracer studies and meteorological analyses -- the Board believes that the idea of "suppressed mixing" put forward by SCE and their consultants (Tr, Nov. 6, 4:30 p.m., pp 114-119) is a misnomer. This phenomenon, which all the technical experts agree can sometimes occur because of initial plume rise, is more properly characterized as delayed mixing. The evidence before the Board clearly shows that pollutants transferred initially to the inversion layer do not simply disappear.

Thus, the Board concludes that during typical meteorological conditions associated with violations of ambient air quality standards, power plant NOx emissions contribute significantly to ground level NO_2 concentrations. Even in

those instances when NOx emissions from elevated power plant stacks initially reach the inversion layer, under the meteorological conditions prevailing in the South Coast Air Shed, such emissions do impact at ground level and make a substantial contribution to ground level concentrations of NO_2.

4. Finding: Reductions of NOx emissions from power plants are needed to the maximum extent feasible and as early as practicable to meet state and national ambient air quality standards for NO_2.

Basis: The facts on which this finding is based include the following:

a. The nonattainment plan for the South Coast Air Basin consists of the Air Quality Management Plan adopted in January 1979 by the SCAQMD and Southern California Association of Governments as amended and approved by the Board. The plan contains a commitment to meet the national ambient air quality annual average for NO_2 and is based in part on and assumes the reduction in NOx emissions to be attained through implementation of Rule 475.1 or a similar rule. The plan has been submitted to the U.S. EPA, and EPA has proposed to conditionally approve the NO_2 portion of the plan (45 FR 21271 ff, April 1, 1980). The plan requires enforceable measures to control NOx emissions from power plants in the South Coast Air Shed.

b. The South Coast Air Quality Management Plan (AQMP) projects that in 1982, total NOx emissions in the South Coast Air Basin and Ventura County will be approximately 1340 tons per day.[1/] Of that total, approximately 660 tons per day[1/] will be from stationary sources and 680 tons per day will be from mobile sources (AQMP, p VII-50). According to the AQMP, a 470 tons per day[1/] emission reduction will be needed to attain the federal NO_2 standard in 1982 (AQMP, p VIII-33). If all suggested mobile and stationary source control measures included in the AQMP to be implemented by 1982 are adopted and are as effective as planned, approximately 120 tons per day of NOx emissions reductions will result (AQMP, p IV-2A). Consequently, an additional 350 tons per day NOx emission reduction (470 less 120) is needed to meet the standard, The

1. The numbers presented above are different from the numbers reported in the 1979 AQMP in that the AQMP assumes that Rules 1135.1 and 59.1 will reduce power plant NOx emissions in the SCAB and Ventura County by 50 percent in 1982. The numbers above are based on the AQMP but have been changed to reflect what the emissions from power plants would have been if Rules 1135.1 and 59.1 were not in effect.

AQMP projects that in 1982, power plants will emit over 230 tons per day[1] of NOx emissions if left uncontrolled. Consequently, even if all emissions from power plants were eliminated, the AQMP shows that the NO_2 federal standard would not be attained by 1982.

c. Approximately 340 tons per day[2] of NOx emissions reductions basinwide (a 30 percent reduction) will be needed in 1985 if the national ambient air quality standard for NO_2 is to be met in the South Coast Air Basin by that date (460 tons per day[2] for the state one-hour NO_2 standard). Emission reductions of approximately 300[2] and 420 tons per day[2] will be needed to meet the national and state standards, respectively, in 1990. (The required reductions are based on the emission projections for 1985 and 1990 shown in the ARB Staff Report, Table V, p 95.) The number of tons per day of NOx emissions which must be reduced in order to meet the state and national standards is based on a rollback analysis which assumes proportionality between NOx emission rates and ambient NO_2 concentrations. The design or "baseline" values used in the rollback calculations, after adjustment for the hydrocarbon benefit and correction for NOx measurement, are 0.46 ppm for the state one-hour standard and 0.078 for the national annual average standard.

The hydrocarbon emission reduction benefit to ambient NO_2 concentrations was discussed on pages 45-46 of the May 25, 1978 ARB Staff Report. A 0.88 correction factor of NOx measured was used based on ARB laboratory findings (California Air Quality Data, Quarterly Summary, Vol. 9, No. 1, Jan-March 1977, p 2).

If no corrections were made, the design values would have been the maximum hourly average of 0.59 ppm NO_2 for the state one-hour standard and annual average of 0.089 ppm NO_2 for the national standard (California Air Quality Data, 1977 and 1978 Annual Summaries); these uncorrected concentrations would have resulted in an increase in needed reductions. Both sets of concentrations were measured in Pasadena. The maximum hourly average was measured in 1978, and the annual average was for 1977, and represent the highest concentrations observed during the last three years for which data are available.

---

2. These numbers are not reported in any documents but have been calculated by the Board from numbers included in the references cited throughout this discussion. The calculation procedures are also discussed in the text of this finding.

d. This finding is consistent with findings made earlier by the Southern California Association of Governments, the South Coast Air Quality Management District, and the Air Resources Board in connection with the adoption and approval of the Air Quality Management Plan for the South Coast Air Basin (SCAG's Resolution No. 79-158-3, January 25, 1979; SCAQMD Resolution No. 79-4, January 26, 1979; ARB Resolution No. 79-27, May 10, 1979).

5. Finding: The reductions in power plant NOx emissions in Ventura County provided for in Ventura County Air Pollution Control District Rule 59.1 are required for the attainment and maintenance of ambient air quality standards in both Ventura County and in the South Coast Air Basin.

Basis: The facts upon which this finding is based include the following:

a. Ventura County's Air Quality Maintenance Plan calls for reductions in both reactive hydrocarbon and oxides of nitrogen emissions as a means of attaining the national ambient air quality standard for ozone. California's State Implementation Plan (Chapter 17, State Implementation Plan, 1979) applicable to Ventura County as revised in April and May 1979 contains a finding that Rule 59.1, which provided for a 90 percent reduction in power plant NOx emissions, would be effective in helping to attain the national ambient air quality standard for ozone. The finding also contains a commitment to include such a rule in the State Implementation Plan. Power plant NOx emissions accounted for 47 percent of the 1977 stationary source NOx emissions in the County, and these emissions represent a substantial fraction of the potential control available to the District for attainment of the ozone standard.

b. The County's plan for attainment of and state and federal standards for suspended particulate matter ("Plan for Attainment of Standards for Total Suspended Particulate in Ventura County", 1980) includes projected reductions in suspended nitrates of 3 $\mu g/m^3$ annual average. According to the plan the reductions are to be achieved, in part, by controlling NOx emissions from power plants located within the County.

c. The Air Resources Board resolved in 1976 (Resolution 76-29) that Ventura County must, in adopting regulations, consider the effects of emissions originating within the County on adjoining air basins when determining the degree of control required. This resolution was based on evidence considered at that June 26, 1976 hearing which showed mixing of the air masses between Ventura County and the rest of the South Coast Air Shed.

d. Tracer releases from SCE's Ormond Beach generating station (ARB Staff Report, pp 40-41; B. K. Lamb, A. Lorenzen and F. H. Shair, Tracer Study of Power Plant Emission, Transport and Dispersion from the Oxnard/Ventura Plain, prepared by the California Institute of Technology for the California Air Resources Board, Contract No. ARB-5-306) have demonstrated that emissions from that facility are transported to the South Coast Air Basin and impact significantly upon air quality in that air basin. In particular, NOx from the facility is clearly contributing to violations of ambient air quality standards for NO_2 at West Los Angeles, Lennox and Reseda.

e. A meteorological analysis prepared by Science Applications, Inc. ("An Estimate of the Degree of Mixing and Interaction Between Los Angeles and Ventura County Air Basins", June 1978) indicates that wind patterns favorable to interbasin transport over coastal and land-based routes are found on more than one-half of the days each year. Transport over the coastal route is common during the late fall and winter months when NO_2 exceedances are most likely in the South Coast Air Basin.

6. Finding: Reduced NOx emissions from power plants will result in slightly less of a reduction in ozone levels in the western portions of the SCAB and Ventura County than would be expected based solely on planned and adopted hydrocarbon control measures, and slightly greater reductions in ozone levels in the eastern portions of the Basin and County, in addition to providing a general reduction in NO_2 concentrations throughout the air shed.

Basis: The facts upon which this finding is based include the following:

a. Field Studies

Field studies in which the plumes of large power plants were traced over distances of 100 kilometers or more show that while NOx in the plume scavenges (decreases) ozone aloft in the immediate vicinity of the source, NOx ultimately increases ozone as the plume moves farther downwind and mixes with the surrounding air (ARB Staff Report, p 154 ff).

b. Air Quality Modeling

The modeling studies performed by SCE and their consultants, Environmental Research and Technology (ERT) and System Applications, Inc. (SAI) relied on both a trajectory and a grid (air shed) modeling approach. The analysis made by ERT used the ELSTAR trajectory model while SAI used a grid model (SAI Air Shed model). The following discussion

briefly summarizes the use and applicability of these models with regard to the issues before the Board.

ERT stated that ELSTAR is ideally suited for examining potential impacts of these Rules on ground level concentrations of pollutants directly under the plume. In all cases where the model was used, the plume was assumed to disperse in the mixing layer in order to maximize calculated ground level impacts. In this model, the conservation of mass concept (mass balance) is applied to an air column as it undergoes vertical diffusion and chemical transformation, and receives primary emissions from surface and elevated sources, all as the column is advected through the basin. The model was used to investigate the effects of power plant NOx control measures during both ozone and NO_2 episodes. The ozone episode (July 21, 1977) simulates two trajectories starting from El Segundo and Los Alamitos at 0700 and 0800 PDT, respectively. The simulations were carried out through 1800 PDT when air columns driven by surface-level winds reach the eastern portion of the basin (Fontana-Upland). The NO_2 episode (December 6, 1977) simulates two trajectories from the same power plants, starting at the same times. However, because of low surface winds on this day, the trajectories during the 11-hour simulation reach only as far as the La Habra-Whittier-Anaheim area.

The major conclusions reached by SCE on the basis of the ERT modeling study with respect to NO_2 and O_3 impacts are the following:

- As a result of the implementation of Rules 1135.1 and 59.1 (in addition to SIP controls in 1987), peak NO_2 values will decrease in the range of 0.02 to 0.06 ppm. Due to implementation of the Rules, NO_2 concentrations are predicted to be consistently lower in all regions covered by the trajectory.

- The power plant NOx controls will also result in increased ozone concentrations, with the change in peak ozone values predicted to be in the range of 0.02 to 0.04 ppm, and with one trajectory predicting an increase of 0.10 ppm. Ozone values are predicted to be higher throughout the trajectory path (including Fontana-Upland) as a result of the power plant NOx controls.

The Board believes this analysis to be seriously flawed. All vertically resolved trajectory models, including ELSTAR, are based on the validity of one critical assumption: that the moving air column retains its integrity throughout the simulation. Verifying this critical assumption requires a knowledge of upper level wind data. Based on our general

knowledge of meteorology, we believe it unlikely that all five vertical layers used in ELSTAR, which extends to a total height of 830 meters, are advected by the surface winds as was assumed in the model. In fact, the ARB staff testified that vertical wind shear has been found to be quite pronounced (Tr, Nov. 13, p 7 ff). It is especially unrealistic to assume that the air column retains its integrity over an entire eleven hour simulation run. This fundamental assumption regarding the vertical integrity of the air column, without a knowledge and investigation of upper winds for the days in question, makes trajectory models such as ELSTAR especially unsuitable for assessing the ground level impacts of a strategy for controlling the emissions from several elevated sources when long transport times and distances are involved, and when the emissions from these sources are mixed with significant emissions from other sources.

Furthermore, both SAI and the ARB staff testified that multi-day (at least 2 day) air quality simulations are required to assess the impact of control measures. This is necessary in order to minimize the influence of assumed initial conditions on conclusions drawn from model predictions. However, trajectory models, by the very nature of their formulation, are not suitable for multi-day runs. This is because it is extremely rare for an air parcel or air column to maintain its integrity over a 12-hour period, as discussed above, much less for 48 hours. The Board believes that this shortcoming also precludes the use of trajectory modeling as a tool for evaluating the air quality effects of individual control strategies.

The SAI modeling analysis used a 3-dimensional air shed model to simulate the photochemical reactions in the atmosphere. Although an early SAI analysis was based on a one-day simulation, later simulations were made by SAI for a multi-day ozone episode that occurred on June 26 and 27, 1974, when the highest ozone concentration measured at Upland was 0.51 ppm. The application of a 3-dimensional model, such as the SAI air shed model, is generally preferable to the trajectory modeling formulation used by ERT because it can more adequately treat temporal and spatial variations in winds at the surface and aloft, and can characterize more realistically the downwind transport and dispersion of elevated plumes.

The SAI modeling results for NO_2 (Tr, Nov. 5, p 16 ff) show that a general decrease in NO_2 concentrations -- at least 0.02 ppm -- directly downwind of the power plants in the Basin would have resulted from the Rules on these days. Dr. Philip Roth of SAI testified further that, because

of the 5 kilometer grid size used, the model probably underestimates the near field impacts of the plumes on NO_2 air quality.

The results of the SAI analysis for 1987 show a slight decrease in ozone concentrations in the eastern portion of the South Coast Air Basin (in the range of 0.01 to 0.02 ppm) due to implementation of the Rules. These decreases occur some 45 to 100 kilometers downwind from the coastal power plants. A corresponding ozone increase of about 0.02 ppm is predicted to occur near the power plants for downwind distances up to 20 kilometers as a result of the Rules. The ozone increases generally occur to the west of a north-south line passing through Fontana.

Dr. Roth and Mr. Killus further testified (Tr, Nov. 6, 4:00 p.m., pp 8-9; pp 23-29) that their analysis showed significant reductions in ambient ozone concentrations in 1987 due to the implementation of other hydrocarbon and oxides of nitrogen control measures contained in the South Coast Air Quality Management Plan, and that these significant reductions in ozone concentrations would occur regardless of the implementation of Rules 1135.1 and 59.1.

Dr. Trijonis, in his review of the SAI modeling analysis (John Trijonis, Critique of the SCE Report: "Power Plant NOx Emissions and Ambient Air Quality in the South Coast Air Basin," May 1980), suggests that an analysis of historical air quality data tends to show the dividing line between ozone increases and decreases due solely to Rules 1135.1 and 59.1 to be farther to the west than indicated by the SAI modeling results. Dr. Trijonis believed that the Rules, considered alone, would produce slightly lower ozone levels in those populated areas where the ambient air quality standards for ozone are exceeded by the widest margin.

In addition, the ARB staff's rebuttal of the SAI analysis of the wind field on June 26-27, 1974, indicates that the wind field generated by the SAI model tends to advect pollutants out of the basin too quickly and does not adequately represent the effect of pollutants in the Basin carried over from one day to the next. If true, this flaw would result in the same errors noted by Dr. Trijonis and discussed in the preceding paragraph.

The ARB staff also performed an independent modeling analysis (ARB Staff Report, p 168 ff) using the EKMA and SMOG models. The Board believes that the results of these studies lead to essentially the same conclusion as

the studies conducted by SAI. The EKMA analysis indicated that a regional reduction (which may be small) in peak ozone concentrations is to be expected due solely to NOx controls on power plants. The SMOG modeling analysis, using hypothetical input data to simulate a power plant plume advected through an urban area, showed slight ozone decreases of about 0.02 ppm at the downwind end of the grid without the power plant plume, as contrasted to the case with the plume. The SMOG modeling analysis also indicated an increase in the ground level NO_2 concentrations throughout the basin due to the addition of the plume. Since the ARB staff's modeling analysis was for a hypothetical situation, the results cannot be compared directly with the SAI results. However, the results agree qualitatively with the SAI analysis in that they show that power plants are producing elevated ozone concentrations in the eastern portion of the SCAB, and that reductions in power plant NOx emissions will result in slight increases in ozone concentrations in upwind areas, slight decreases in ozone concentrations in downwind areas, and significant decreases in NO_2 concentrations in both upwind and downwind areas.

7. Finding: The issue of the toxicity of ozone relative to the toxicity of nitrogen dioxide is not relevant to this proceeding.

Basis: The facts upon which this finding is based include the following:

The Board believes that it is necessary to limit ambient levels of both these pollutants, given the existence of federal and state ambient air quality standards for each pollutant, and of data showing clear exceedances for both pollutants (Tr, Nov. 6, 4:00 p.m., p 74, ln 10-21).

In making this finding the Board takes notice of SCE's undocumented assertion about relative toxicity (SCE Comments, page 00047; Tr, Nov. 6, 4:00 p.m., p 73, ln 15 - p 77, ln 13). The Board also takes notice of "Comments on Oxides of Nitrogen Controls" by William Innes. One of the comments of Mr. Innes refers to a previous presentation by Mr. Innes, at the American Industrial Hygiene Association, in which he discussed the issue of relative toxicity. In neither of these discussions of the issue of relative toxicity is there any recognition given the overriding issue of attainment of ambient air quality standards for both NO_2 and ozone.

8. Finding: Particulate nitrate matter is a significant contributor to the total suspended particulate burden in the South Coast Air Basin, especially in the downwind receptor areas in the eastern part of the Basin. The control of NOx emissions is an essential component of the strategy to reduce total suspended particulate matter.

Basis: The facts upon which this finding is based include the following:

In 1979, air monitoring stations measured violations of the state total suspended particulate matter standard on more than half of the samples. The California Air Quality Data Bank, the Board's ACHEX Field Study, and the study by Pitts and Grosjean (James N. Pitts, Jr., and Daniel Grosjean, Detailed Characterization of Gaseous and Size-Resolved Particulate Pollutants at a South Coast Air Basin Smog Receptor Site: Levels and Modes of Formation of Sulfate, Nitrate and Organic Particulates and Their Implications for Control Strategies, Final Report, California Air Resources Board, Contracts ARB-5-384 and A6-171-30 (1978)) show that nitrates frequently comprise one-third of the total particulate burden in the eastern part of the Basin. SCE introduced testimony to show that nitrate measurements are inaccurate and frequently dominated by artifact formation and that control of NOx emissions would be of little or no value in reducing total suspended particulate matter.

However, in his written testimony during the hearing on November 13, 1980, Dr. Bruce Appel showed that even when the influence of artifact nitrates is subtracted, ambient nitrate levels are still quite high. Dr. Appel also emphasized the fact that atmospheric acidity can lead to the removal of particulate nitrate from the surface of sampling filters. This "negative artifact" phenomenon can cause measured nitrate concentrations to be lower than actual concentrations. Dr. Appel concluded that particulate nitrate still accounts for a substantial contribution to the total suspended particulate burden. Dr. Appel's statement additionally shows that a substantial portion of the nitrate aerosol particles exist in the inhalable size range, which is also the size range that most efficiently scatters visible light and, hence, contributes most heavily to visibility degradation.

9. Finding: Particulate nitrate contributes to visibility degradation, and control of NO_2 is an important factor in the effort to improve visibility in the South Coast Air Basin.

Basis: The facts upon which this finding is based include the following:

In the eastern portion of the South Coast Air Basin, visibility was reduced to less than 3 miles by air pollution on 75 days during 1979 (ARB Staff Report, p 87; South Coast Air Quality Management District, Summary of Air Quality in the South Coast Air Basin in California 1979, June, 1980).

The Board's ACHEX Study (G.M. Hidy, Ed. Characterization of Aerosols in California, Vol. IV, ACHEX Final Report, California Air Resources Board, Contract 348, (1974)), Pitts and Grosjean (James N. Pitts, Jr., and Daniel Grosjean, Detailed Characterization of Gaseous and Size-Resolved Particulate Pollutants at a South Coast Air Basin Smog

Receptor Site: Levels and Modes of Formation of Sulfate, Nitrate and Organic Particulates and Their Implications for Control Strategies, Final Report, California Air Resources Board, Contracts ARB-5-384 and A6-171-30 (1978)), and Trijonis (John Trijonis, Visibility in California, Final Report, California Air Resources Board, Contract A7-181-30 (1980)) have performed analyses which show that visibility impairment is explained almost entirely by the sulfate and nitrate aerosol fractions (ARB Staff Report, p 171).

However, SCE believes that nitrate measurements are dominated by artifact nitrate formation and that there is very little nitrate aerosol to degrade visibility.

The artifact nitrate issue was discussed in Finding 8 above. In addition, Dr. Appel reported that 70 percent of the nitrate sampled by his group was below 3.5 microns in size, and that particles in this size range are extremely effective in scattering visible light and thus degrading visibility.

10. Finding: NOx emissions contribute to acid precipitation in the South Coast Air Basin.

Basis: The facts upon which this finding is based include the following:

Chemical analysis of rainfall samples from World Meteorological Organization background sites indicates that nitrate ion concentrations at these sites are not measurable. Even in urban areas, measurements taken at the end of rainstorms exhibit pH values close to the theoretical background value of 5.65 for water in equilibrium with atmospheric carbon dioxide (Tr, Nov. 6, 4:00 p.m., p 46 ff).

Recent studies (ARB Staff Report, p 175) in the South Coast Air Basin have shown that rainfall acidity is typically 10-100 times more acidic than unpolluted rain (ARB Staff Report, p 175), with maximum acidity nearly 1000 times the background unpolluted value. Nitrate and nitrite ion concentrations in rainfall from Pasadena show significant correlations with ambient nitric oxide concentrations.

SCE questioned the existence of an acid rain problem in the South Coast Air Shed (SCE Submittal, p 843), and presented data from "background" locations in remote areas to support their position. However, the ARB staff showed (Staff Rebuttal, Nov. 13, 1980, Att VI, pp 1-2) that the locations listed by SCE, although remote, are impacted by emissions from anthropogenic sources, and that acid precipitation at these sites is incorrectly interpreted as representing natural background values.

Since nitrate ions have been shown in the South Coast Air Basin studies to be in many cases at least as important as sulfate ions (ARB Staff Report, pp 88-89) and since the levels of nitrate and sulfate correlate well with rainfall acidity (J.J. Morgan, et al, Measurement and Interpretation of Acid Rainfall in the Los Angeles Basin, Final Report, California Air Resources Board, Contract No. A7-110-30), the Board finds that power plant NOx emissions are contributing significantly to acid precipitation in the South Coast Air Basin.

11. Finding: The above findings that power plant NOx emissions will have a significant impact on ground level NO_2 concentrations are generally applicable to other pollutants and to emissions from tall stacks in general.

Basis: This finding is based on the same information and same rationale as presented in Finding 3. The conclusions drawn from the SF_6 tracer studies and from the meteorological analyses apply equally to any gaseous or fine particulate pollutants emitted from elevated sources in the South Coast Air Shed.

Although pollutants other than NOx were not specifically discussed at these hearings, the findings regarding the effects of tall stacks in the air shed apply equally well to pollutants other than NOx, and the various modeling studies (see Basis for Finding 6) can similarly be applied to other pollutants by applying appropriate chemical transformations that occur while the pollutant is in transit. Inasmuch as power plant stacks produce the highest effective stack height of any stacks in the South Coast Air Shed, it must be concluded that any stack with a lower effective stack height will also significantly impact ground level air quality.

12. Finding: A strategy to achieve the maximum practicable reduction of NOx emissions from power plants should first consider the reduction in NOx from a 50 percent cutback in oil and gas burning, and then include adoption of a measure which will reduce by 80 percent the NOx emissions from six to seven of the largest SCE steam generating units and three of the largest LADWP steam generating units.

Basis: The facts upon which this finding is based include the following:

a. There are regulatory and economic pressures to significantly reduce the consumption of oil and gas by utilities.

Although it is impossible for anyone to predict precisely the energy future of the United States at this time, it is certain that great pressures do and will continue to exist to reduce fuel oil and natural gas burning. These pressures are reflected in the current provisions of the Powerplant and Industrial Fuel Use Act (42 U.S.C. 8301 et seq.),

Section 301, which prohibits the use of natural gas as a primary energy source in an existing power plant after January 1, 1990. The likelihood of a future decrease in oil and gas burning to generate electricity is also seen in submissions by the utilities to the California Energy Commission. (Submissions to the California Energy Commission by SCE and LADWP for common forecasting methodology (CFM) II, July 1979, and CFM III, July 1980).

The record of the Board hearings on Rules 1135.1 and 59.1 in January and March 1980 contains abundant evidence presented by the utilities that because of an expected decrease in oil and natural gas availability, a substantial decrease in oil and gas generated electricity in the South Coast Air Shed could be expected (e.g., Tr, January 30, pp 72-80).

Additionally, even if natural gas and oil are available to California utilities, the price of these fuels may be expected with a considerable degree of certainty to increase throughout the 1980's and beyond, so that there will be a considerable economic incentive for utilities to reduce substantially their use of these fuels.

It is impossible to quantify precisely the reduction in future use of gas and oil for electrical generation, particularly for 1990 and beyond. Estimates have ranged from a 23 percent reduction to 50 percent reduction. (Tr, January 30, 1980, p 49; SCE CFM III, 1980; LADWP CFM III, 1980; ARB Staff Report, p 154.)

Based on the available evidence, the Board concludes that 50 percent is a reasonable upper limit for the expected reduction in oil and gas use by utilities in the South Coast Air Shed by 1990.

b. These pressures will also result in a decrease in the amount of electricity generated by existing units in the South Coast Air Shed.

A decrease of 50 percent in oil and gas burning by utilities in the South Coast Air Shed by 1990 will result in a substantial reduction in the amount of electricity generated from existing power plants in the Air Shed.

Virtually all of the gas and oil used by SCE and LADWP is used in the existing steam generating units which are located in the South Coast Air Shed. Therefore, a reduction in oil and gas consumption will result in a corresponding reduction in electrical generation from the steam generating units

governed by the Rules. The submittals of SCE and LADWP to the California Energy Commission (CFM III, July 1980) show that the amount of electricity to be generated by these steam generating units in the Air Shed will decrease annually from 1980 to 1990.

c. The remaining demand for electricity in the South Coast Air Shed will be principally satisfied by the newer, larger, and more-efficient units in the utilities' systems.

With a 50 percent decrease in oil and gas burning by the utilities and the corresponding reduction in electricity generated in the South Coast Air Shed, the base load* capacity needed from steam generating units in the Air Shed after 1990 can be supplied by six or seven of SCE's largest steam generating units and three of LADWP's largest steam generating units.

The ARB staff testified at the March 27, 1980 hearing that with a 50 percent oil and gas cutback and the corresponding reduction in electricity generation in the Air Shed, only a relatively few steam generating units would be needed to supply the base electrical demand (Tr, March 27, 1980, pp 65-70). The ARB staff further indicated that it believed the aggregate rated capacity required to satisfy the base load demand under such a condition would be 3420 megawatts for SCE and 1003 megawatts for LADWP. Detailed data submitted to the ARB staff by the utilities on their steam generating units (Based on various letters from utilities, for example, letter from James Mulloy, LADWP to P. Venturini, January 27, 1978) show that generally the largest units are also among the newer, more efficient and least NOx emitting units. These points were not contested by the utilities. Therefore, the Board finds it reasonable to conclude that these larger units would be selected by the utilities to remain as base load units after 1990.

LADWP's submittals to the California Energy Commission generally support this conclusion. The Common Forecasting Methodology III (Submitted by LADWP to the CEC in July 1980) cites high projected capacity factors for the large units and low capacity factors for small units. (CFM III, Form No. R-5, pp 1-3.) However, SCE in its Common Forecasting Methodology III (Form No. R-5, p 254) shows increasing capacity factors for its units that are less than 100 megawatts of capacity. In fact, SCE projects for the year 2000, that the small, inefficient units will have higher capacity factors than all other steam generating units in the Air Shed. This does not support the conclusion that the small units will not be used as base load units.

*As used in these findings, base load means the relatively constant portion of electrical demand.

The reasons for SCE's projected high capacity factors for small units are unclear since operating these units at such high capacity factors is contrary to both economic dispatch and least NOx dispatch. Further, the ARB staff testified that at workshops conducted prior to this hearing, SCE agreed that with a 50 percent oil and gas cutback, the generating capacity of six of their largest units would adequately supply their base electrical needs after 1990 (Tr, March 27, 1980, pp 65-70). Based on the lack of any rational basis to support SCE's most recent projections and their inconsistency with previous SCE projections and recent LADWP projections, the Board concludes that the base load demand in 1990 can be met by six or seven of SCE's largest units.

d. A 50 percent reduction in oil and gas used will result in at least a 50 percent reduction in power plant NOx emissions, with 90 percent of the remaining NOx emitted by relatively few base loaded units.

Detailed data submitted by the utilities to the ARB staff show that the larger steam generating units are newer, more efficient and emit less NOx than the smaller units. (Based on various letters from utilities, for example, letter from James Mulloy, LADWP to P. Venturini, January 27, 1978). Operating the more efficient units at higher capacity factors and decreasing the capacity factors of the less efficient units would appear, on its face, to be consistent with the goal to reduce oil and gas consumption. Furthermore, operating the lower polluting units at higher capacity factors is also consistent with the least NOx dispatch requirements of the Rules. For these two reasons, the utilities are likely to operate their newer units more often in order to minimize fuel costs and to comply with least NOx dispatch. Thus, a 50 percent reduction in oil and gas consumption will likely result in a greater than 50 percent reduction in power plant NOx emissions.

Based on information provided by the staff the Board estimated the amount of emissions that would result from the uncontrolled operation of the base loaded units after 1990 (Staff Report, dated September 19, 1980, pp 244-252). With the assumption that there would be a 50 percent reduction in oil and gas use after 1990, and that this, combined with implementation of a least NOx dispatch plan, would result in at least a 50 percent reduction in NOx emissions, the ARB staff calculated that 90 percent of the remaining emissions would come from six of the largest SCE units and three of the largest LADWP units. This point was not disputed by the utilities.

e. With a 50 percent oil and gas cutback and the implementation of a least NOx dispatch plan, rules requiring an 80 percent decrease in the emissions from six or seven of the largest SCE steam generating units and from three of the largest LADWP steam generating units will result in an overall decrease in power plant NOx emissions in the South Coast Air Shed of nearly 90 percent.

The ARB staff prepared a scenario for SCE (ARB Staff Report, September 19, 1980, pp 244-252) based on the installation of selective catalytic reduction (SCR) systems achieving 90 percent control on two 800 megawatt units in Ventura County and four 480 megawatt units in the South Coast Air Basin. The ARB staff also prepared a scenario for LADWP (ARB Staff Report, pp 244-252) based on the retrofit of SCR on Haynes 5 and 6 (344 megawatts each) and Scattergood 3 (315 megawatts). The above nine units are among the largest, newest and most efficient units in the utilities' systems. The Board estimates that under these scenarios, but adjusted for only 80 percent control on those units, there would be an 89 percent reduction in annual power plant NOx emissions.

This analysis is based on the fact that a 50 percent cutback in oil and gas use by 1990, together with the implementation of a least NOx dispatch plan, can achieve as much as a 60 percent reduction in NOx emissions if capacity factors are higher for the base loaded units and low for the peaking units (ARB Staff Report, September 19, 1980, pp 244-252). Of the remaining 40 percent of the emissions, 90 percent will come from the nine or ten large base load units. Controlling these base load units by 80 percent will result in an additional reduction in emissions of 29 percent (90 percent times 40 percent times 80 percent). Therefore, the total reduction would be 89 percent (60 percent plus 29 percent).

SCE presented written testimony (SCE Written Testimony, Dec. 2, 1980, p 13) at the December 2, 1980 hearing describing a scenario based on the retrofit of SCR on slightly different units (two 800 megawatt units, two 480 megawatt units, and three 320 megawatt units, a total of seven units, as contrasted with the ARB staff's scenario of six units). LADWP also presented written testimony at the December 2, 1980 hearing describing a scenario based on the retrofit of SCR on Haynes units No. 1 (224 megawatts), 5 and 6 (both 344 megawatts). Although the scenarios developed by the ARB staff and the utilities call for the installation of SCR on some different units, the total steam generating capacity proposed to be retrofitted is similar in magnitude in each case. Consequently, the Board finds that the overall emissions reductions achieved

in these scenarios will be similar if all retrofitted units are controlled by 80 percent, a 50 percent reduction in oil and gas consumption occurs, and least NOx dispatch is implemented.

f. A control strategy requiring the installation of 80 percent controls only on a limited number of base load units (or equivalent capacity) is prudent and reasonable because requiring controls on units which may not have significant use after 1990 would result in excessive costs.

SCE testified that the amount of replacement power that they will be able to obtain by 1990 is extremely uncertain due to delays in the construction of new electrical sources and loss of pending contracts (Tr, March 27, 1980, pp 104-117). Because of this, SCE testified that it is unable to guarantee that they will be able to reduce their oil and gas use by 50 percent by 1990. Because of such uncertainty, SCE developed a scenario for rule compliance which would require installation of SCR on 16 units and LADWP developed a scenario which would require installation of SCR on 11 units (SCE's Written Testimony, Nov. 5, 1980, pp 150-151; Tr, Nov. 13, 1980, p 62). This is in contrast to the ARB staff's scenario cited on pages 244-252 of the September 19, 1980 Staff Report which assumed the installation of SCR on six of SCE's units and three of LADWP's units. The basic reason for the difference between the ARB staff's estimate and the utilities' estimate of the number of units requiring the installation of SCR is the assumed amount of oil and gas cutback by 1990.

To minimize the uncertainty as to the number of units requiring retrofit by 1990, and, consequently, to minimize the financial risk to the utilities associated with achieving the maximum practicable NOx reductions, the Board believes it reasonable to require the installation of SCR only on those few units that are certain to remain as base load units with high capacity factors under the most optimistic oil and gas reduction scenarios. In the event that the reduction in the use of oil and gas in power plants by 1990 is less than 50 percent, and, consequently, units not controlled by 80 percent are used to supply base load demand, additional rules can be developed to require further control of NOx emissions from such units or from other NOx emitting sources. The advantage of this approach is that no units will be required to be retrofitted with 80 percent controls unless there is a substantial likelihood that these units will be operated to provide base load electricity after 1990.

13. Finding: Selective catalytic reduction (SCR) is a commercially available and proven technology to reduce NOx emissions from existing oil and gas fired electric utility boilers by 80 percent.

Basis: The facts upon which this finding is based include the following:

SCR has been retrofitted on existing, commercial size oil and gas fired electric utility boilers in Japan and is achieving NOx reductions in the range of 75-85 percent. (Testimony of William Ellison, NUS Corporation (consultant to LADWP), Tr, Nov. 13, 1980, p 68; testimony of James Sheehan, Stearns-Roger (consultant to LADWP), Tr, Nov. 13, 1980, pp 127-218; statement of Dan Waters, LADWP, Tr, Nov. 13, 1980, pp 106-107; ARB Staff Report, Sept. 19, 1980, pp 98-99.)

14. Finding: The cost per pound of NOx reduced to comply with the Rules is within the range of $2.35 to $2.90 per pound.

Basis: The facts upon which this finding is based include the following:

The cost-effectiveness of any proposed rule is determined by computing the total annual cost of compliance with the rule and dividing that cost by the annual reductions in emissions which result from the rule. The cost of compliance include both the capital cost (annualized) and the operating and maintenance costs. For these two Rules, the annual emissions reductions are dependent on the assumptions regarding capacity factors and fuel burned for the power plants equipped with controls, representing two other factors that must be taken into account. Each of these factors are discussed below.

a. The average capital costs of compliance with these Rules is within the range of $70 to $89 per kilowatt of capacity controlled for each utility, as expressed in 1980 dollars.

There is much data in the record regarding the cost of installing SCR on electric generating units of the affected utilities. SCE, LADWP, and the ARB staff have each presented to the Board their estimates of capital cost for retrofit of SCR. Because these estimates were presented in various ways, the Board has normalized the cost data when necessary to reflect only the 80 percent control actually required by the Rules, as expressed in 1980 dollars. The averages of these estimates range from $70/kw to $94/kw for each utility system in 1980 dollars.

SCE's latest capital cost estimates for 80 percent control range from $89/kw to $98/kw with an average of $93.5/kw (SCE's Written Testimony, Dec. 2, 1980, Attachment 3). These cost estimates are based on conceptual cost estimates

which have been consistently revised downwards as more detailed estimates have been made. For example, the amended version of SCE's estimates of cost shows a latest estimate of $111 per kilowatt (90 percent control), downwardly revised from SCE's previous estimate of $137 per kilowatt. Similarly, the latest SCE cost estimate is also based upon a conceptual (rather than preliminary or advanced) design. The Board believes, therefore, the current SCE estimate will likely be further reduced, as suggested by more detailed cost estimates by SCE for its demonstration (90 percent control) unit at Huntington Beach. Based on a conceptual design, SCR on the Huntington Beach unit (107.5 Mw) was originally estimated to cost about $129/kw (in 1980 dollars). However, preliminary and advanced engineering cost estimates prepared by SCE for this unit are $79/kw (in 1980 dollars). (SCE's Written Testimony, Nov. 5, 1980, p 00064, Attachment 1.)

The consultant for LADWP, Stearns-Roger, estimates the capital cost for retrofitting SCR systems for 80 percent emission controls on affected units to range from $77/kw to $124/kw with an average of $89/kw (LADWP's Supplemental Written Testimony, Dec. 2, 1980, Table 1). These estimates are the result of an analysis by Stearns-Roger of the difficulty of retrofit for individual units and the drafting of a conceptual design. Given the preliminary nature of the cost estimates, the Board finds that there is good general agreement between the ARB staff and LADWP estimates for capital cost.

The Board also finds that the major differences between the ARB staff and Stearns-Roger capital cost estimates is the assumed contingency cost. The Stearns-Roger estimate used a 25 percent contingency factor; consequently, the Stearns-Roger estimate of $89/kw should be considered an upper bound since SCE has used a much lower contingency of seven percent in its most recent cost for the Huntington Beach unit. The ARB staff estimate, on the other hand, should be considered a lower bound since it is based on the same basic assumptions as the Stearns-Roger estimate, but with a lower contingency cost.

b. The average annual operating and maintenance cost of compliance with the Rules is within the range of $9 - $10 per kilowatt of controlled capacity for each utility, as expressed in 1980 dollars.

The ARB staff, SCE, and LADWP have also presented to the Board their estimates of operating and maintenance costs for retrofit of SCR with 80 percent control on affected units. These estimates range from $9/kw/yr to $17/kw/yr in 1980 dollars.

Based on the ARB staff estimate of $10.82/kw/yr (ARB Staff Report, Sept. 19, 1980, p 120), adjusted downwardly to reflect 80 percent control and upwardly to reflect 1980 dollars, the Board estimates the cost to be $9/kw/yr. The Stearns-Roger estimate of $9/kw/yr to $10/kw/yr is in remarkably close agreement with this estimate (LADWP Written Supplemental Report, Dec. 2, 1980, Table 2).

SCE testified to the Board, however, that its estimate for operating and maintenance costs is $17/kw/yr (SCE Report, Dec. 2, 1980, p 16). This estimate is almost twice the estimate presented by the ARB staff and by Stearns-Roger. Both Stearns-Roger (Tr, Dec. 3, p 35) and SCE (SCE Written Testimony, Nov. 5, 1980, p 00068, Attachment 5) have identified and used in their estimates a catalyst cost of $875 per cubic foot. (Catalyst material must be replaced periodically.) Furthermore, Stearns-Roger and the ARB staff have both identified this catalyst cost as the single largest component of operating cost: approximately one-half (LADWP Written Testimony, Dec. 2, 1980, Table 2). Consequently, unspecified items (other than catalyst replacement) must account for the higher estimate by SCE, since all three estimates assumed the same cost and frequency of catalyst renewal. The Board finds SCE's estimate to be unsupported by its evidence, inconsistent with the estimates of LADWP, Stearns-Roger, and the ARB staff, and inconsistent with the fact that actual operating costs reported for SCR units in Japan are less than one-half the lowest estimates discussed above (Letters from Kitadada to Goodley, July 23, 1980; M. Kikkawa to Goodley, June 27, 1980).

Based on the analyses of all data in the record regarding operating and maintenance costs for retrofit of SCR with 80 percent effectiveness, the Board concludes that the approximate cost ranges from $9/kw/yr to $10/kw/yr.

c. The average capacity factors for each unit controlled with SCR will likely be in the range of 50-70 percent in 1990 and beyond.

The testimony presented to the Board has made it clear that estimates of cost-effectiveness are extremely dependent on the capacity factors assumed for units retrofitted with SCR. Therefore, in order to derive the cost of the Rules per pound of NOx reduced, it is important to determine a reasonable capacity factor for each unit. The average capacity factor for all units in the LADWP and SCE systems is presently over 40 percent, with newer units having capacity factors of over 50 percent (LADWP CFM III, Form R-5, pp 1-3 and SCE CFM III, Form R-5, p 254). Therefore, if electrical generation in the Air Shed were

reduced by 50 percent, it is reasonable to assume that a few large units could and would be used to meet most of the demand (Finding 12 above). In addition, least NOx dispatch would require that units with lowest emissions (also the newest and most efficient) would be first added and last taken off the line, the result being an even greater likelihood that such units would be operated at high capacity factors.

Capacity factors at least as high as those found for these few units today (over 50 percent), and up to 70 percent, would be likely for the units to be considered for retrofit for the NOx controls.

d. Base load power plants in the South Coast Air Shed will likely be operating on oil, and not natural gas, beyond 1990.

There is much evidence in the record that there will be little natural gas available for utility use after 1990. Section 301 of the Powerplant and Industrial Fuel Use Act of 1978 (42 U.S.C. 8301 et seq.) requires that: (1) natural gas not be used as a primary energy source in an existing electric power plant on or after January 1, 1990; and (2) natural gas not be used as a primary energy source in an existing electric power plant for any calendar year before 1990 in greater proportions than the average yearly proportion of natural gas which such power plant used as a primary energy source in calendar years 1974-1976, unless an exemption is granted under Section 312 of the Act. The thrust of the Act is to limit the use of natural gas by power plants and industrial sources, particularly after 1990 (CEC 1979 Biennial Report, pp 8-9).

The California Energy Commission and the utilities have independently projected the amount of natural gas that will be available for utility use. The CEC's natural gas availability projections as of August 29, 1980, show that approximately half of the electrical demand in 1990 and 2000 will be met with the use of natural gas. The utilities' projections, as reported in their "1990 California Gas Report" to the Public Utilities Commission, on the other hand, show that no gas will be available for power plant use after 1990 ARB Staff Report, September 19, 1980, pp 225-229). Even if natural gas is available, and if legislation is changed to allow its use in power plants, most of the available natural gas will be used after 1990 on the uncontrolled peaking units, which operate most often on summer days when natural gas availability is highest.

Consequently, the Board finds it reasonable to assume that base load power plants in the South Coast Air Shed will not be operating to any significant extent on natural gas after 1990, and that the estimates of cost-effectiveness of controls should be based on the use of oil rather than natural gas as a fuel.

e. The cost-effectiveness of compliance with the Rules is within the range of $2.35 to $2.90 per pound of NOx reduced.

The cost-effectiveness estimates of the ARB staff and the utilities for Rules 1135.1 and 59.1 are included in Tables 1, 2 and 3 of this finding, normalized for 80 percent control and expressed in 1980 dollars. Because of the variations in the capital and operating and maintenance cost and capacity factor estimates of the ARB staff and the utilities, the cost-effectiveness estimates also vary.

Although the Board recognizes uncertainties in specific cost estimates, it finds that the evidence in the record supports finding that the average cost-effectiveness of compliance with Rules 1135.1 and 59.1 for each utility ranges from a lower bound of $2.35 per pound to an upper bound of $2.90 per pound of NOx reduced. The only estimates to exceed this amount are one presented by SCE and an estimate presented by LADWP the last day of the hearing. The Board finds the SCE estimate inappropriate for the same reasons discussed above regarding SCE's capital and operating and maintenance costs. The Board finds the last LADWP estimate inappropriate because it was based upon unusually low capacity factors for the retrofitted units. This latter estimate is discussed further in Finding 20 below.

15. Finding: The cost-effectiveness of the Rules is reasonable and comparable to that of other control measures adopted by the Board.

Basis: The facts upon which this finding is based include the following:

Based on a review of measures contained in the AQMPs for the South Coast and Ventura County, as well as of other NOx control measures the Board has considered or is aware of, the Board finds that there are no other measures or combinations of measures capable of achieving the same (or similar) NOx emissions reductions as Rules 1135.1 and 59.1 for less cost. The Rules are also comparable in cost-effectiveness to other control measures adopted by the Board, including the 0.4 gram per mile passenger car NOx standard cited by the utilities for comparison. The cost of that standard is currently estimated to be $2.39 per pound, expressed in 1979 dollars, or $2.63 per pound in 1980 dollars. The upper bound cost of the Rules is within 15 percent of the cost of this motor vehicle rule; this difference is reasonable given the uncertainties in the estimated cost of the Rules.

SUMMARY TABLE 1.

UTILITY COST ESTIMATE VS. ARB STAFF COST ESTIMATES
TO COMPLY WITH SCAQMD RULE 1135.1 AND VAPCD RULE 59.1
(1980 Dollars)

UTILITY	Overall Percent Reduction with th Proposed Rule	Total Capacity (Mw) Requiring SCR Retrofit	No. of Units Requiring SCR Retrofit to Achieve 80% Control	Utility Estimates			ARB Staff Estimates		
				Total Capital Cost (Million Dollars)	Total Annual Cost (Million Dollars)	Average Cost Effectiveness ($/lb.)	Total Capital Cost (Million Dollars)	Total Annual Cost (Million Dollars)	Average Cost Effectiveness ($/lb.)
SCE	89	3520	7	329	126	3.70	246	80	2.36
DWP	88	912	3	81	25	2.88	64	21	2.40

TABLE 2

COMPAR SCE Estimates ..TAFF COST ESTIMATES TO COMPLY WITH THE PROPOSED RULE 1135.1 WITH 80 PERCENT CONTROL ON INDIVIDUAL UNITS (1980 Dollars)

Unit Number	Capacity Factor	SCE Estimates		ARB Staff Estimates	
		Capital Cost for 80% Control (million dollars)	Total Annual Cost (million dollars)	Capital Cost for 80% Control (million dollars)	Total Annual Cost (million dollars)
Ormond Beach 1	57	78.32	29.26	56.00	18.24
Ormond Beach 2	57	78.32	29.26	56.00	18.24
Alamitos 5	66	42.72	16.70	33.60	10.94
Alamitos 6	66	42.72	16.70	33.60	10.94
Alamitos 3	53	28.16	11.07	22.40	7.30
Alamitos 4	52	28.16	11.07	22.40	7.30
Etiwanda 3	52	30.98	11.64	22.40	7.30
Total		329.38	125.7	246.40	80.26

Note: Cost estimates have been adjusted to reflect 80 percent control and are expressed in 1980 dollars. Average capital cost estimates are $93.5 per kilowatt for SCE and $70 per kilowatt for the ARB staff estimates, although SCE's more detailed unit-by-unit costs are shows as well. The total annual costs include both annualized capital costs, and operating and maintenance costs of $27 per kilowatt for SCE and $9 per kilowatt for the ARB staff estimates.

16. Finding: The cost of Rules 1135.1 and 59.1, when allocated to the average residential customer of SCE, represents an increase of about 1.5 to 3 percent in the average residential customer's electricity bill over the period 1982-2007.

Basis: The facts upon which this finding is based include the following:

SCE, in its testimony submitted to the Board on December 2, 1980, included estimates (page 33) of the impact of Rules 1135.1 and 59.1 on its residential customers. Following discussions between the Board and Mr. Rodney Larson of SCE, it was agreed that the increase in average residential rates as a result of these rules would be about 1.5 to 3 percent. This would increase current average monthly residential bills of about $35.00 by about $0.50 to $1.00. The ARB staff presented an estimated bill increase of $0.55 per month, which is consistent with SCE's estimate.

17. Finding: LADWP's compliance with Rule 1135.1 will result in an increase of 2 to 3 percent in average LADWP electricity bills to residential customers.

Basis: The facts upon which this finding is based include the following:

Mr. Harrison Call testified on behalf of LADWP on December 3, 1980. According to Mr. Call's testimony, the increase in total revenues required by LADWP to comply with Rule 1135.1 would translate into a 2 to 3 percent increase in average monthly residential electricity bills. The ARB staff estimate was consistent with that of LADWP.

18. Finding: The capital costs of compliance with Rules 1135.1 and 59.1 represent a small fraction of both utilities' capital needs over the next ten years.

Basis: The facts on which this finding are based include the following:

a. SCE's testimony submitted to the Board on December 2, 1980, indicates that their capital needs through 1987 amount to about $7.5 billion. Based on SCE's estimates, the capital requirements for these Rules amount to about $374 million. The capital requirements for these Rules therefore amount to about 5 percent of their capital needs through 1987.

b. SCE indicated in their written testimony that the firm is currently experiencing a critical financial period and that the costs of these Rules would place an extreme financial burden upon them. While the Board recognizes that SCE may currently be experiencing cash flow problems, SCE's testimony indicated that they are transitory in nature, and are principally associated with ongoing construction projects which are nearing completion in the next few years.

Mr. McDaniel of SCE, during questioning, agreed with the Board's assessment that SCE's cash flow position has been difficult for the last couple of years and is expected to remain difficult for another couple of years, but that prospects for returning to financial health are favorable beyond that time.

c. Based on the testimony of Mr. Harrison Call of LADWP, the operation and maintenance costs (in 1980 dollars) of complying with Rule 1135.1 represent about 4.4 percent of LADWP's 1980 operation and maintenance costs, exclusive of fuel costs. Since fuel costs are normally included in operating and maintenance costs and comprise a large part of those costs, the operating and maintenance costs of complying with Rule 1135.1 would be considerably less than 4.4 percent of total operating and maintenance costs.

d. The testimony, on November 13, 1980, of Mr. Harrison Call of LADWP indicated that for the minimum case presented by LADWP where three units are controlled to the 90 percent level, the amount of debt financing required to comply with the Rule ($100 million), when compared to the levels of financing usually dealt with, should not present a serious problem to the Department. The Rule considered on December 2 and 3, 1980, requires only 80 percent control and according to LADWP testimony debt financing for this Rule will be about $75 million. This is $25 million less than that required for the 90 percent case and therefore should not present any serious financing problems.

19. Finding: The installation schedule, as included in the Rules adopted by the Board, is reasonable and technologically feasible.

Basis: The facts on which this finding is based include the following:

Maintenance schedules have been submitted by both utilities as part of their written testimony (Attachment 1 and p 20 of SCE's and Exhibit I of LADWP's Written Testimony of Dec. 2, 1980, and p 6-2 of LADWP's Nov. 5, 1980 Written Testimony). These schedules show the dates for scheduled outages to overhaul each of the units which would likely be controlled under the Rules. Since a major overhaul takes approximately nine to eleven weeks, the Board believes it is reasonable to require the installation of the control equipment at the time of such outages (SCE Supplemental Written Testimony, Dec. 2, 1980, pp 13-14). However, to avoid undue hardship on the utilities, it is also reasonable to ensure that not too many units are down for extended periods at the same time. The utilities indicated, and demonstrated by their submissions over time, that maintenance schedules are flexible and can generally be shifted by one to four months if necessary.

In written testimony, the utilities also provided an estimate of the total time required to install the controls. Both SCE and LADWP indicated that it would take up to 2-1/2 years to install the necessary controls on some units (SCE Supplemental Testimony, Dec. 2, 1980, pp 13-14 and LADWP Written Testimony, Nov. 5, 1980, p 6-2). Based on a review of the maintenance schedules and the testimony, the Board finds that in the case of at least one unit of more than 300 megawatts capacity of each utility, sufficient lead time exists that controls could be fully retrofitted by December 1, 1983. Additionally, prior to start-up of controls on such a unit, SCE will have an opportunity to gain operating experience with SCR through its Huntington Beach demonstration unit, which should facilitate its ability to operate SCR on a unit of larger size. Therefore, because of the need to move as expeditiously as practicable in this matter, the Board finds it is reasonable to require the installation of controls on at least one unit of each affected utility by that date.

The Board also finds that, based on the magnitude of the investment involved in complying with Rules 1135.1 and 59.1, it is prudent to include a provision that, following the installation and operation of one SCR unit on a unit of more than 300 megawatts by each major utility, the Board should require a review of the effectiveness and actual cost of that installation. The review should occur after sufficient operating experience but before any substantial expenditure of funds on subsequent units (Tr, Dec. 3, 1980, pp 55-71). Based on review of the maintenance schedules and construction schedules for SCR (Attachment 1 and p 20 of SCE's and Exhibit I of LADWP's Dec. 2, 1980 Written Testimonies and p 6-2 of LADWP's Nov. 5, 1980 Written Testimony), the Board concludes that a general requirement to install controls at the first regularly scheduled outage after October 1, 1985, provides for an adequate review period after the completion of the installation of SCR on one full-scale unit of each utility.

The purpose of this time period is two-fold: first, it provides an opportunity for the utilities to gain first-hand operating experience with a full-scale SCR unit, and then apply that experience to the final designs of subsequent units. Second, it provides an opportunity for the review of actual cost data and updated utility resource plans which could affect the number of subsequent units to be retrofitted. Although the utilities would always have the right to petition for review of the Rules on the basis of new information, the Board believes that the establishment of a specific time period for such a review would be helpful. It is the Board's intent, however, that the review result in substantive changes to the Rule only if information provided during that review indicate cost or cost-effectiveness estimates (specifically including capacity factor estimates) outside the range of the estimates found by the Board in the instant hearings.

The Board further finds that the maintenance schedules submitted by the utilities indicate that final retrofit of all units can be achieved by December 31, 1989, while still allowing the utilities to provide reliable electric services.

20. Finding: The alternative control strategy discussed by LADWP on December 3, 1980, does not achieve the maximum practicable reductions in power plant NOx emissions, is not supported by the evidence in the record, and contradicts previous LADWP testimony.

Basis: The facts on which this finding is based include the following:

At the close of his testimony on December 3, 1980, Mr. Dan Waters of LADWP introduced into the record three figures which resulted from a comparison by LADWP of the effect on NOx emissions and on cost of a NOx emissions control strategy which would require the installation of SCR on power plants and an alternative power plant control strategy. LADWP's alternative strategy would require the installation of Thermal DeNOx, instead of SCR, on certain units, plus the optimization of off-stoichiometric (O/S) firing on Scattergood units 1 and 2 and Haynes unit 2.

The Board has several major concerns regarding LADWP's presentation: First, LADWP's alternative strategy does not achieve or even come close to achieving the maximum practicable degree of control of NOx emissions from power plants or that degree of control which is required to achieve and maintain ambient air quality standards; second, because Thermal DeNOx is only effective over a small load range, LADWP's alternative strategy will not even achieve the limited reductions claimed for it; and third, the projected capacity factors on which these curves are based are new, have not been reviewed by state agencies with expertise in this area, and are not consistent with previous LADWP testimony. In addition, the figures were drafted by LADWP in a manner which misrepresented the effects of the strategy. A detailed analysis of these points follows:

a. The alternative strategy proposed by LADWP will not achieve the degree of NOx emissions control from power plants necessary to make reasonable progress towards attainment and maintenance of ambient air quality standards.

To achieve the air quality standards for nitrogen dioxide, emissions from power plants must be reduced by the maximum practicable amount. (Finding 4) SCR is a proven technology capable of achieving an 80 percent reduction in oxides of nitrogen emissions from oil and gas fired power plants, and thus represents the maximum practicable reductions which can be obtained from power plants in the South Coast Air Shed (Finding 13). However, the strategy proposed by LADWP

would achieve a NOx reduction of only about half of that achieved by SCR, even if Thermal DeNOx could achieve the average 40 percent reduction assumed by LADWP.

The figures presented by LADWP were intended to represent the emissions of its power plants over the years 1982 through 2000 (Tr, Dec. 3, pp 121-122). LADWP assumed the use of Thermal DeNOx on Haynes units 1, 5, and 6, and off-stoichiometric (O/S) firing on Scattergood units 1 and 2 and Haynes unit 2 as an alternative control strategy. It asssumed that SCR would achieve an average 80 percent reduction and that Thermal DeNOx could achieve an average 40 percent reduction for each unit so controlled.

The manner in which LADWP drew the figures suggest that the NOx emissions reduction from the Thermal DeNOx scenario is about two-thirds of that from the SCR scenario. However, the Board believes the figures to be grossly inaccurate. In the first place, the reductions due to O/S firing are but a small part of the reductions achieved by 40 percent Thermal DeNOx and 80 percent SCR. For example, Table 2 (page 6) of the KVB report (C.E. Blakeslee, J.M. Robinson, D.E. Shore, Cost-Effectiveness of NOx Reduction Techniques (Supplemental), prepared by KVB, Inc. for City of Los Angeles Department of Water and Power, October 1980) shows that for the year 1990 O/S firing reductions on Scattergood units 1 and 2 and Haynes unit 2 would be 172,000 pounds per year. However, the total reduction due to 40 percent Thermal DeNOx on Haynes units 1, 5 and 6 would be 2,685,000 pounds per year. Similarly, the 80 percent SCR reductions for Haynes units 1, 5 and 6 would be 5,375,000 pounds per year. Therefore, O/S firing reductions are only 3 percent of the total potential reductions.

Since Thermal DeNOx has been assumed by LADWP to be used on precisely the same generating units as SCR, and since LADWP assumed that Thermal DeNOx would achieve exactly one-half the reductions obtained with SCR, and since O/S firing represents only a small fraction of the total potential reductions, the reductions achieved under the Thermal DeNOx scenario must be approximately one-half the reductions achieved under the SCR scenario.

Consequently, notwithstanding the graphical techniques used by LADWP in presenting its data, the alternative strategy does not even approach the maximum practicable reductions which can be achieved from power plants in order to achieve and maintain ambient air quality standards.

b. The use of Thermal DeNOx will not likely result in the NOx emissions reductions assumed by LADWP, as evidenced by, among other things, prior testimony of both LADWP and SCE.

The alternative strategy discussed by LADWP (Tr, Dec. 3, 1980, pp 121-122) relies upon the use of Thermal DeNOx as an alternative to SCR. Thermal DeNOx is a process of injecting ammonia into the flue gas at a point where the temperature is about 1750°F. The ammonia reacts, in part, with the nitric oxide in the flue gas to form nitrogen and water. As the temperature of the flue gas differs from the optimum temperature, the effectiveness of the process rapidly falls off to zero. No catalyst is used in the Thermal DeNOx process.

The report of KVB (Blakeslee, Robinson, Short, October 1980) states that LADWP will install Thermal DeNOx on Haynes unit 4 as a demonstration project because of the uncertainties with the new Thermal DeNOx technology. The December 3, 1979 ARB Staff Report (page 22) contains a table which lists the control-effectiveness of Thermal DeNOx on Haynes unit 4 as ranging from zero at 60 percent load, to 24 percent at 90 percent load, and to 41 percent at full load. That same ARB Staff Report (page 21 ff) further states that the data are based on predictions by Exxon Research and Engineering Corporation (Exxon). The ARB staff also presented data from Exxon (Letter dated August 14, 1980, from Boyd E. Hurst of Exxon Research and Engineering Corporation to Francis DiGenova of the ARB) in which Exxon projects a reduction of 51 percent at full load if an improved mixing nozzle arrangement is used (no hydrogen case) and a reduction of only 24 percent at 90 percent load. Thus, the improvement in efficiency due to the new nozzles appears to occur only at 100 percent load. The injection of hydrogen improves the performance of Thermal DeNOx, but the utilities have expressed reluctance to use hydrogen (ARB Staff Report, December 31, 1979, p 34).

Electrical units are usually operated over a wide load range. For example, Table 5-2 of the Stearns-Roger testimony for LADWP shows the predicted 1990 loading schedule of LADWP units including Haynes unit 4. Haynes unit 4 is shown to have the following load schedule:

% Load	% Operating Time	Efficiency Thermal DeNOx
0	69	0
30	8	0
50	6	0
70	6	12
90	6	34
100	5	41

The efficiency of Thermal DeNOx is also listed in the above table. If the emissions are assumed to be linear with load, then the overall control of emissions from Haynes unit 4 using Thermal DeNOx would be 23 percent. This degree of control caused LADWP and SCE representatives and the ARB staff all to express concern regarding the viability of the Thermal DeNOx process (Mr. Waters for LADWP, Tr, March 27, 1980, p 180, ln 1-6; Mr. Bjorkland for SCE, Tr, January 30, 1980, p 68, ln 16-21; Mr. Johnson for SCE, Tr, January 30, 1980, pp 155-181; Mr. Goodley for ARB staff, Tr, January 30, 1980, pp 40-58). LADWP's suggestion that an alternative strategy be based on the less effective Thermal DeNOx process is inconsistent with the above evidence in the record, and is, itself, unsupported by any significant evidence.

c. The projected capacity factors which are critical assumptions to LADWP's alternative strategy are new, significantly different from previous LADWP submissions in this hearing, and are inconsistent with previous testimony.

The cost-effectiveness of both the Rules and LADWP's alternative strategy are inversely proportional to the capacity factors of the controlled units; emissions reductions due to each strategy are directly proportional to capacity factors. This is because the capacity factor is the amount of electrical energy that a unit produces in a year divided by the amount which it would produce if it operated at full load for the entire year. Therefore, the amount of annual emissions from a unit is directly proportional to the capacity factor, and since cost-effectiveness is annualized cost divided by annual emissions, the cost-effectiveness is inversely proportional to the capacity factor. If projected capacity factors are assumed to decrease, the calculated cost-effectiveness of controls increases.

The capacity factors assumed by LADWP in its December 3, 1980 testimony are inconsistent with the most recent estimates of the California Energy Commission, (California Energy Commission, LADWP Supply Plan Based on CEC Adopted Forecast and Biennial II Assumptions, December, 1979), the state agency responsible for the approval of utility resource plans for purposes of power plant need and siting decisions. Furthermore, these factors are inconsistent with previous LADWP submittals in this hearing as recent as November 5, 1980 (C.E. Blakeslee, J.M. Robinson, and D.E. Shore, Cost-Effectiveness of NOx Reduction Techniques, prepared by KVB, Inc. for City of Los Angeles Department of Water and Power, October 1980). In addition, these factors do not appear to reflect the application of a least NOx dispatch plan, since a unit without NOx controls (Haynes unit 3) is assumed to operate more frequently than a unit equipped with NOx controls (Haynes unit 1). For the above reasons, the Board finds LADWP's December 2 capacity factor projections unsupported by the evidence in the record.

Figure 1 shows the historical and projected emissions from the LADWP system for three scenarios: (1) no added controls; (2) Thermal DeNOx on Haynes units 1, 5 and 6; and (3) SCR on Haynes units 1, 5 and 6. All of the scenarios are based on the latest California Energy Commission projections of capacity factors, which are similar to LADWP's prior submissions in this hearing. All other assumptions used by LADWP were used by the Board. The cost-effectiveness calculated based upon these same latest California Energy Commission capacity factors for Thermal DeNox and SCR in 1990 are $1.46 and $2.97 per pound of NOx, respectively. The much larger estimates presented by LADWP for SCR are almost solely due to the significantly lower projections of capacity factors assumed for their latest submission.

21. Finding: Rules 1135.1 and 59.1 have been developed through a thorough and adequate process of planning and analysis.

Basis: A consultant for SCE asserted that the procedure followed in the adoption of Rule 1135.1 was unsound and did not include sufficient analysis.

The Air Quality Management Plan for both Ventura County and the South Coast Air Basin are the result of a thorough planning process in which SCE was able to participate. That planning process included steps outlined by the SCE consultant. In hearings on the subject Rules and as set forth in these Findings, the Board has also made a complete analysis of factors relevant to the Rules' development.

FIGURE I

ESTIMATED EMISSIONS FROM LADWP POWER PLANTS USING HISTORICAL DATA AND ENERGY COMMISSION PROJECTED CAPACITY FACTORS FOR FUTURE YEARS

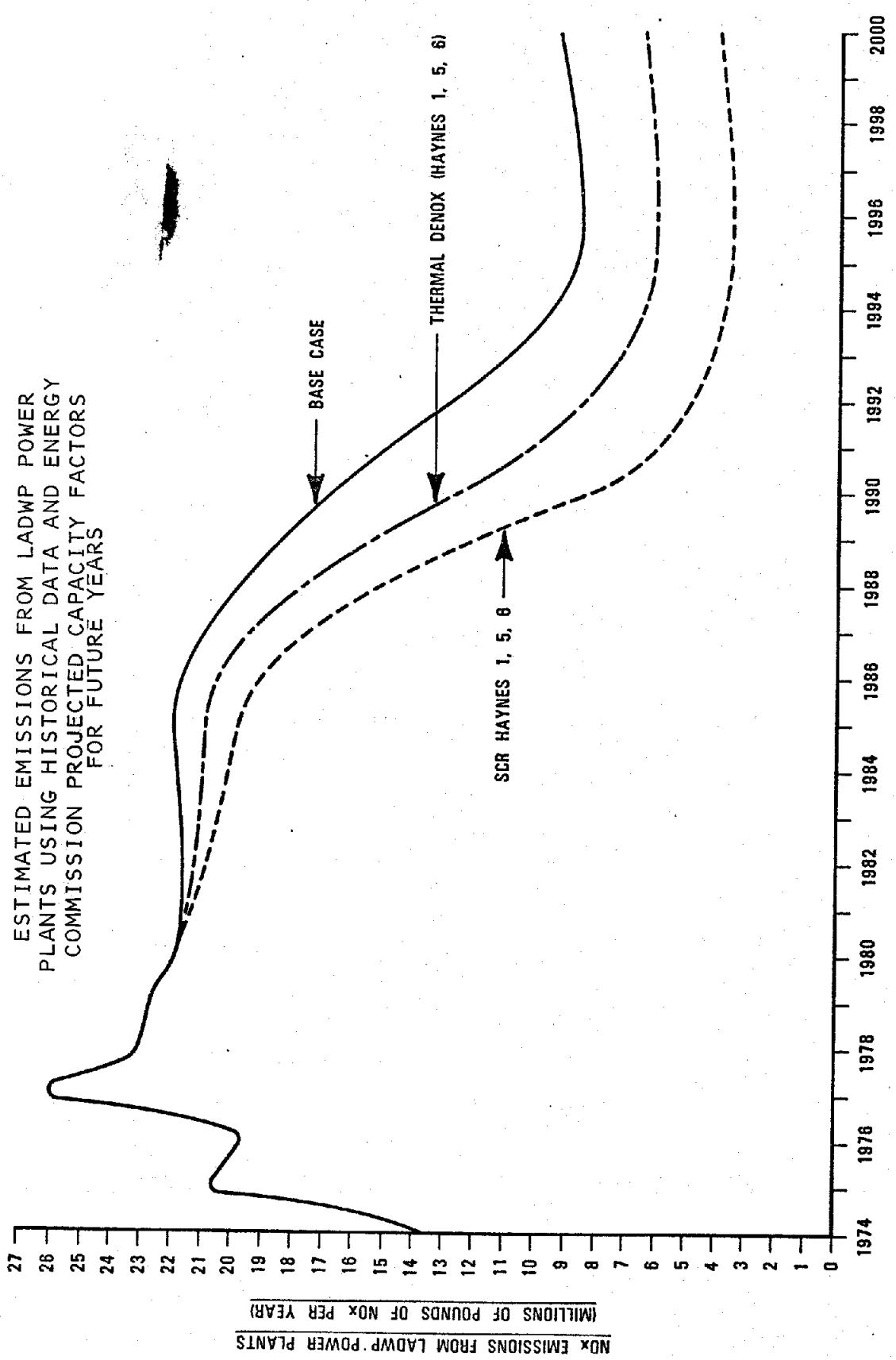

22. Finding: The Board, in Resolution 78-48, August 7, 1978, found Rule 475.1 adopted by the South Coast Air Quality Management District to be inconsistent with the purposes of Division 26. The failure of the SCAQMD to adopt a rule consistent with the purposes of Division 26 of the Health and Safety Code as found in Resolution 78-48 constitutes a failure to meet responsibilities under Division 26.

23. Finding: A major utility subject to the provisions of Rule 1135.1 has generating facilities within both the VCAPCD and the SCAQMD. Both the VCAPCD and the SCAQMD are within the South Coast Air Shed, and emissions of oxides of nitrogen from power plants in Ventura County are transported to and have an effect on air quality in the South Coast Air Basin (Finding 5). Therefore, it is necessary and appropriate that to coordinate the efforts of the VCAPCD and the SCAQMD the Board adopt for both Districts rules which provide a systematic approach to controlling power plant NOx emissions.

24. Finding: The SCAQMD has recommended that the Board consider and adopt amendments to Rule 1135.1 (Letter from J.A. Stuart to Thomas C. Austin, September 21, 1979; September 19, 1980 ARB Staff Report, Appendix E). Therefore, it is necessary and appropriate for the Board to take such action to provide assistance to the SCAQMD.

25. Finding: Ventura County Air Pollution Control District Rule 59.1 was originally adopted by the Air Resources Board in 1979 in response to an action by the Ventura County Board of Supervisors deferring to the Board the adoption of a rule for the control of NOx emissions from power plants. (Ventura County Resolution, September 19, 1978; Board Resolution 79-49, May 29, 1979.) Therefore, it is necessary and appropriate that the Board adopt amendments to Rule 59.1 to provide assistance to the VCAPCD.

26. Finding: The inclusion of Rule 1135.1 as amended in the nonattainment plan for the South Coast Air Basin is required and necessary for the nonattainment plan to meet the requirements in the Clean Air Act that the plan provide for the attainment of national primary ambient air quality standards as expeditiously as practicable and that, in the case of nonattainment areas, the plan provide for the implementation of all reasonably available control measures as expeditiously as practicable, and require reasonable further progress including emissions reductions from existing sources through the adoption of reasonably available control technology. (Sections 110(a)(2), 172(b)(2), and 172(b)(3); Findings 1-8, 12-14 above). In the absence of Rule 1135.1 as amended, the nonattainment plan for the South Coast Air Basin will not meet and does not comply with the requirements of the Clean Air Act.

27. Finding: The inclusion of Rule 59.1 as amended in the nonattainment plan applicable to Ventura County is required and necessary for the plan to meet the requirements in the Clean Air Act that the plan provide for the attainment of national primary ambient air quality standards as expeditiously as practicable and that, in the case of nonattainment areas, the plan provide for the implementation of all reasonably available control measures as expeditiously as practicable, and require reasonable further progress including emissions reductions from existing sources through the adoption of reasonably available control technology. (Sections 110(a)(2), 172(b)(2), and 172(b)(3); Findings 5 and 12-15 above). In the absence of Rule 59.1 as amended, the nonattainment plan applicable to Ventura County will not meet and does not comply with the requirements of the Clean Air Act.

28. Finding: The amendments to Rules 1135.1 and 59.1 adopted by Resolutions 80-68 and 80-69 are appropriate and necessary to simplify and clarify the Rules' requirements and to meet the concerns expressed by affected utilities that under the Rules as amended March 27, 1980, they would be required to control NOx emissions from virtually all their power generating units, even those expected to have very low capacity in 1990 and beyond. The amendments to the Rules are intended to achieve the same level of reductions in NOx emissions as the March 27 version (Staff Report, pp 157-165), while at the same time retaining the utilities' flexibility to designate which units to control and providing them with certainty regarding the capacity required to be controlled.

State of California
AIR RESOURCES BOARD

Public Hearing to Reconsider Rule 1135.1 of the South Coast Air Quality Management District and Rule 59.1 of the Ventura County Air Pollution Control District Controlling Emissions of Oxides of Nitrogen from Power Plants

ARB Compliance with the California Environmental Quality Act (CEQA)

The following discussion is intended to explain how the ARB assures that any possible adverse environmental effects of its proposed actions will be identified and mitigated. As an environmental protection agency, the ARB is not required to prepare an Environmental Impact Report (EIR) on this project, but other written documentation prepared by the agency must describe the proposed activity with alternatives to the activity and mitigation measures to minimize any significant adverse environmental impact. Further, regulations adopted by the ARB require that the action will not be adopted by the Board as proposed if there are feasible alternatives or feasible mitigation measures which would substantially lessen any significant adverse impact of the activity on the environment. ARB regulations also require that prior to taking final action, the Board must respond in writing to significant environmental points raised during the evaluation process. Finally, CEQA requires that the ARB not adopt the activity for which significant adverse effects have been identified unless one or more of the following findings are made:

1. That changes have been incorporated into the project which mitigate the significant environmental impacts.

2. That such mitigation measures are within the responsibility and jurisdiction of another public agency and have been (or can and should be) adopted by such other agency.

3. That specific economic, social, or other considerations make the mitigation measures or alternatives infeasible.

Consequently, the ARB staff report discusses several possible environmental impacts of the proposed rule. Several other concerns were raised during the hearing process. These are identified and discussed in the following section. In addition, mitigation measures which could minimize any impacts found to be significant are examined, as are alternatives to the proposed action. In this case, since the proposal is the amendment of certain rules already in existence, the "no project" alternative is for the Board to take no action and to leave the current rules in place. Other alternatives discussed are the repeal of the subject rules in their entirety, amending the rules to be less stringent, and restoring the Districts' original Rules.

RECEIVED BY
Office of the Secretary

DEC 23 1980

Resources Agency of California

The Board, prior to taking final action, has adopted the attached responses to significant environmental issues. Further, in adopting the activity itself, the Board, in its resolution, has made findings relating to each significant environmental issue raised, either incorporating feasible mitigation measures and alternatives into the rules, indicating that other agencies are responsible for mitigation of these effects, or indicating the factors which prevent the imposition of mitigation measures or alternatives. If future experience reveals adverse environmental impacts not reasonably anticipated, corrective action can be taken by the Air Resources Board or other appropriate agency (e.g., the local air pollution control districts which will be implementing any adopted rule) to mitigate such effects.

State of California
AIR RESOURCES BOARD

Response to Significant Environmental Issues

Item: Public Hearing to Reconsider Rule 1135.1 of the South Coast Air Quality Management District and Rule 59.1 of the Ventura County Air Pollution Control District Controlling Emissions of Oxides of Nitrogen from Power Plants

Public Hearing Dates: November 5, 6, 13, and December 2, 3, 18, 1980

Response Date: December 18, 1980

Issuing Authority: Air Resources Board

Introduction: Southern California Edison (SCE) and the Los Angeles Department of Water and Power (LADWP) have raised several concerns which they believe were not adequately addressed by the Air Resources Board (ARB) staff in the September 1980 report. Since the discussion of many of the issues raised by the utilities assumes an understanding of the selective catalytic reduction (SCR) process, it is appropriate to explain briefly the operation and performance of the process involved.

The utilities are being required to reduce NOx emissions on some of their steam generating boilers by 80 percent. This requirement will probably be satisfied by retrofitting utility boilers with the selective catalytic reduction (SCR) system to control oxides of nitrogen (NOx) emissions. The technology takes advantage of the preferential reaction of ammonia (NH_3) with NOx rather than with other flue gas constituents. Since oxygen (O_2) enhances the reduction, the reaction can be best expressed as

$$4NH_3 + 4NO + O_2 \longrightarrow 4N_2 + 6H_2O \qquad (1)$$

$$4NH_3 + 2NO_2 + O_2 \longrightarrow 3N_2 + 6H_2O \qquad (2)$$

Equation 1 represents the predominate reaction since approximately 95 percent of the NOx in combustion flue gas is in the form of nitric oxide (NO). Therefore, under ideal conditions a stoichiometric amount of NH_3 can be used to reduce NOx to harmless molecular nitrogen (N_2) and water vapor (H_2O).

In practice, an NH_3:NO mole ratio of about 1:1 has typically reduced NO emissions by 90 percent with a residual NH_3 concentration (also called "ammonia breakthrough") of less than 10 ppm. (1)*

The SCR process requires other auxiliary equipment such as a reactor, a catalyst, ammonia storage facilities and ammonia injection systems.

The optimum temperature for the NOx reduction reaction without a catalyst is about 1800°F. However, the catalyst effectively reduces the optimum reaction temperature to approximately 600°F to 850°F.

*See reference list page 14.

Catalysts may be made with different chemical compounds; those with vanadium (V) compounds were found to promote the reduction of NOx with NH_3 and to be unaffected by the presence of sulfur oxides (SOx), another exhaust gas component which could interfere with the desirable reaction. (2)

Titanium dioxide (TiO_2) was found to be an acceptable carrier, since it is resistant to attack from SO_3. (2) Therefore, many SOx resistant catalysts are based on TiO_2 and vanadium pentoxide (V_2O_5).

The life of the catalyst depends upon the type of flue gases it is being used to treat. The catalysts to be used on power plants in the South Coast Air Basin should last for 2 years or longer. (3) Also, because of oil firing, catalysts will be most likely of the parallel flow type. It may have one of many shapes such as parallel plate, parallel tube or honeycomb type. It may be made of ceramic material such as TiO_2 or metal.

The catalyst may be of homogenous or of coated variety. In essence, the type of the catalyst to be used in the power plant depends upon the user and the process vendor. Figure 1 shows as an example of how, typically, a honeycomb type catalyst would be placed in a reactor. When the catalyst loses its reactivity, it is replaced.

The above explanation briefly summarizes the control methods that will likely be employed to retrofit the utility boilers to comply with Rules 1135.1 and 59.1. The discussion that follows addresses the concerns raised by SCE and LADWP and the Board's response to those concerns.

Comment 1: The LADWP has expressed concerns that disposal of spent catalyst in an environmentally sound manner is an unresolved problem and that because of the presence of vanadium in the catalyst, special disposal or reclamation methods will be required.

Response: The application of selective catalytic reduction to a total of 4432 MW of power plant capacity, as required to fully comply with Rules 1135.1 and 59.1, is expected to result in the use of about 1100 tons of catalyst per year.[1] The exact type and composition of catalyst would depend on the process vendor and the user, but typically a parallel flow, honeycomb type catalyst would contain V_2O_5 and titanium dioxide (TiO_2).

---

1. This estimate follows from a total generating capacity required to be controlled of 4432 megawatts (MW) and SCE's estimate (4) that control of its units larger than 175 MW (total of 24 units having 7720 MW) would require 1860 tons per year of catalyst, assuming a two year catalyst life:

$$4432 \text{ MW} \times \frac{1860 \text{ tons of catalyst/yr}}{7720 \text{ MW}} = 1068 \text{ tons catalyst/yr}$$

Based on commercial operating experience to date on SCR installations in Japan in which catalyst deterioration has not been significant (3) catalyst lifetimes are expected to equal or exceed 2 years with fuel oil firing and 3 years with natural gas firing. Requirements for catalyst are inversely related to catalyst lifetime, hence a catalyst lifetime of 3 years corresponds to a catalyst requirement of about 712 tons per year.

FIGURE 1

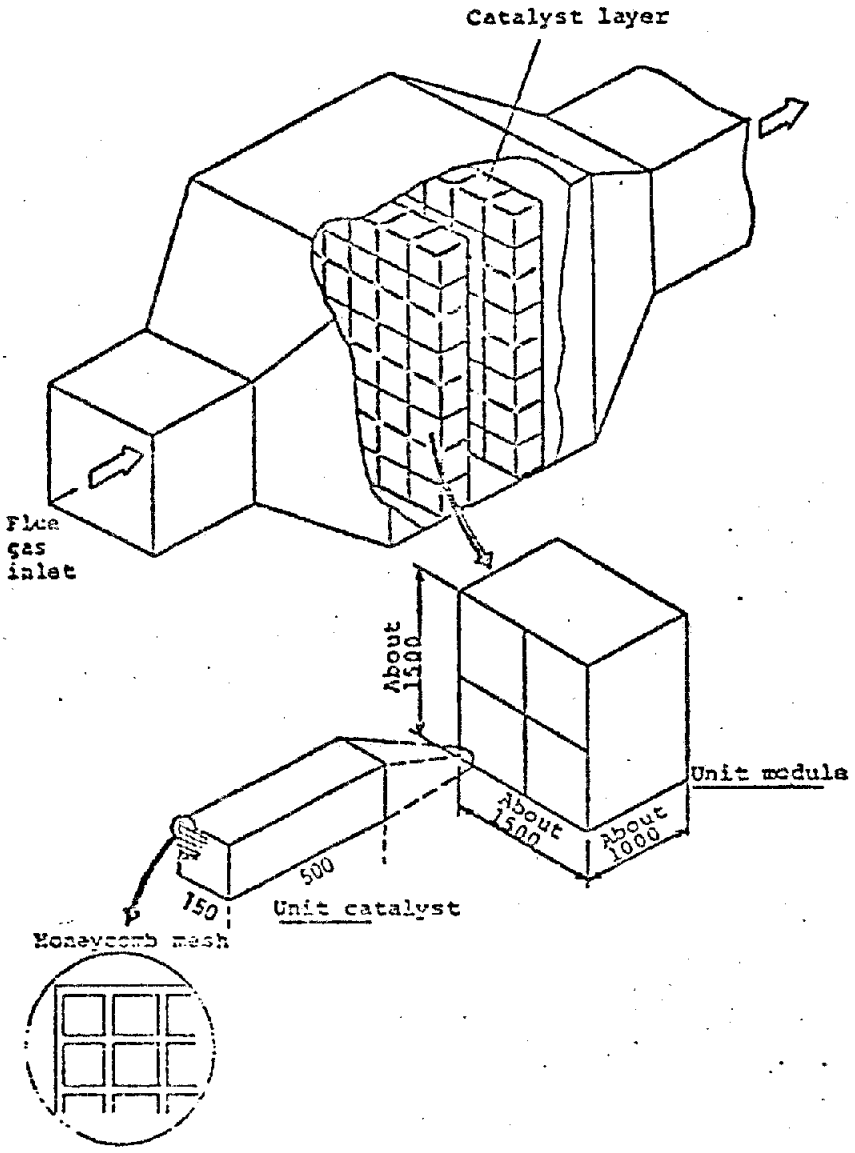

Example of a fixed bed reactor with honeycomb type catalyst (Ishikawajima-Harima Heavy Industries; sizes are in mm).

Source: J. Ando. NOx Attachment for Stationary Sources in Japan. August 1979.

Depending upon the specific type and material of the catalyst selected, valuable components may be recovered for reuse, just as used or "spent" automotive exhaust catalysts and refinery process catalysts are normally amenable to recovery or reprocessing prior to disposal. To the extent that spent catalyst cannot be recovered, and constitutes a potentially hazardous waste[2], treatment and/or disposal at a Class I or Class II-1 (hazardous waste) disposal site may be required. In such a worst case, the increment of potential hazardous waste generation due to Rules 1135.1 and 59.1 would be about 1100 tons per year, as compared with the current rate of generation of hazardous wastes in California of approximately 11,000,000 tons per year (5). Thus, full implementation of Rules 1135.1 and 59.1 is not expected to increase the production of potentially hazardous waste in California by more than about 0.01 percent, even in the worst case.

Mitigation of the above increments of hazardous waste disposal is accomplished by regulation of liquid and solid hazardous waste disposal in California by the State Water Resources Control Board (and Regional Boards), the Department of Health Services, and the Solid Waste Management Board. Through a system of hazardous waste generation reporting by the industry, and regulation by the above agencies to ensure environmentally sound disposal, the problem of hazardous waste disposal associated with the Board's action will be mitigated in the same manner as is the disposal of other toxic wastes.

Comment 2: Southern California Edison has expressed concerns that some of the toxic metals from catalysts that may be used in the SCR process can be released into the environment.

Response: The Board has received no evidence which demonstrates that catalysts which are used in the SCR process, as applied to oil or gas fired units to comply with Rules 1135.1 and 59.1, would result in significant increases in emissions of vanadium (V) or other potentially toxic metals from power plants.

Vanadium is a natural constituent of crude oil and is also contained in significant amounts in the (refined) residual oil burned in power plants in the South Coast Air Basin and Ventura County. (6) Thus, at the present time, combustion of fuel oil in the South Coast Air Basin and Ventura County is believed to result in significant release of vanadium into the environment. Based on data provided by SCE (6), and assuming 50 million barrels of oil per year burned in power plants (the minimum amount of oil burned by all utilities in any recent year), vanadium emissions are estimated to be about 120 tons per year[3] at the present time, i.e. absent further controls.

---

2. Depending upon the specific composition of the catalyst selected, "spent" catalyst may or may not be classified as a hazardous waste.

3. $$\frac{50 \times 10^6 \text{BBLS}}{\text{year}} \times \frac{320 \text{ lbs}}{\text{BBL}} \times \frac{15 \times 10^{-6} \text{ lbs V}}{\text{lb fuel oil}} \times \frac{\text{ton}}{2000 \text{ lbs}} = \frac{120 \text{ tons V}}{\text{yr}}$$

If this amount of vanadium is expressed as V_2O_5, an oxidized form, the amount of V_2O_5 is

$$\frac{120 \text{ tons V}}{\text{year}} \times \frac{182 \text{ tons } V_2O_5}{51 \text{ tons of V}} = 429 \text{ tons } V_2O_5/\text{yr.}$$

The Board is not aware of any other source of vanadium emissions, due to fuel burning, SCR, or any other source, which is larger than the above current emissions from power plants. Furthermore, the Board is not aware of any data which show that the retrofit of SCR to an oil or gas fired power plant would result in significantly increased emissions of vanadium or other components of the catalyst. To the contrary, available information from Japan indicates good catalyst performance over long periods (in excess of 2 years), suggesting that vanadium, the principal active component in the catalyst bed, remains essentially intact and continues to perform at, or near, full design efficiency. (3) Vanadium or vanadium compounds could potentially present risks as toxic compounds at elevated levels of human exposure; however, such compounds have not been identified as high priority toxic compounds at the present time, (9, 10) and evidence received by the Board does not support the concern that Rules 1135.1 and 59.1 would result in significant environmental impacts. If vanadium or vanadium compounds are identified as a significant threat or potential threat to human health or the environment at some future time, such compound(s) would be regulated in accordance with the statewide programs to control airborne toxic substances, including existing and future ARB and local district programs.

Comment 3: Southern California Edison has raised concerns that nitrosamines can be formed as a result of ammonia injection in flue gases for Thermal DeNOx and SCR processes.

Response: Representatives of SCE testified that with a model system using a propane/air flame, they have found a potential for formation of nitrosamines when ammonia is injected in the flue gases. Subsequent testimony by SCE indicated that the company's concerns regarding the formation of nitrosamines was based on injection of ammonia in a propane enriched flame. However, this situation would occur only during a boiler upset condition. It is standard operating practice at the present time to avoid any such possible upsets in order to ensure system safety and reliability. Consequently, since the utility boilers are carefully operated with excess air and are not fuel enriched, the hydrocarbon radical (essential to the formation of nitrosamines) would be completely oxidized and would not be available for the formation of nitrosamines in the presence of ammonia. Thus, no nitrosamines are expected to be formed if ammonia is injected in a normal operating mode of an electric utility boiler. Mitigation of possible impacts during boiler upset conditions consists of the utilities continuing current standard operating practices to avoid unsafe fuel-rich operation of a boiler.

Comment 4: LADWP has raised concerns regarding ammonia breakthrough to the atmosphere as a result of its injection in the noncatalytic and catalytic deNOx methods.

Response: As explained in the introduction, ammonia (NH_3) is injected in the flue gases to reduce NOx emissions through chemical reactions leading to the formation of harmless materials. Ideally, a stoichiometric (chemically correct) amount of NH_3 can be used to reduce 100 percent of the NOx to harmless molecular nitrogen and water vapor, with no ammonia breakthrough. However, in practice, the stoichiometric NH_3:NO mole ratio of 1:1, in the presence of a catalyst, will typically reduce NOx emissions by 90 percent with a residual NH_3 concentration of less than 10 parts per million (ppm). (1) In processes which reduce NOx without use of a catalyst, higher NH_3:NO mole ratios may be required for less than 90 percent reduction, resulting in slightly higher residual NH_3.

This residual NH_3 is commonly known as "NH_3 slip", "breakthrough", "carryover", or "release". This ammonia breakthrough is minimized by optimizing the design and operation of the catalytic and noncatalytic deNOx processes, as illustrated by the attached Figure 2. The attached figure shows that an SCR system, when operated for 90 percent NOx removal efficiency, is expected to result in NH_3 breakthrough in the range of 5-10 ppm in stack gases. However, SCR systems which are designed and operated for 80 percent NOx removal efficiency are expected to result in stack gas concentrations of less than 5 ppm of NH_3 carryover. As discussed in the ARB Staff Report of September 19, 1980 (7), ground level NH_3 concentrations at the point of maximum plume impact would be expected to be 1/1000 of the stack concentrations, resulting in ground level NH_3 concentrations below natural background levels and far below the level of any adverse health impacts which have been identified.

Because optimum operation of an SCR system to reduce NH_3 breakthrough would also minimize the consumption of NH_3 and the deposition of NH_3-based reaction products on components such as air preheaters, system design and operation to minimize NH_3 carryover is also in the economic interest of the system owner/operator, as this would minimize operating and maintenance expenditures. Thus, any remaining impact of NH_3 breakthrough would be fully mitigated by the utilities by system design and operation to minimize NH_3 emissions.

Comment 5: LADWP has expressed concerns that SCR systems promote the oxidation of sulfur dioxide (SO_2) to sulfur trioxide (SO_3) and that therefore the total sulfate concentration in the flue gas would be increased by the proposed rules. Furthermore, LADWP believes that increased sulfate emissions may adversely affect our ability to attain and maintain applicable ambient air quality standards and the public health and welfare which these standards are designed to protect.

Response: As explained in the introduction, SCR systems are used to facilitate NOx emission control. In addition to the two chemical reactions that convert NOx to N_2 and H_2O (see introduction), a third reaction also occurs, simultaneously. This third reaction is the oxidation of sulfur dioxide, a compound produced during the combusion of any fuel containing sulfur, to sulfur trioxide, and can be expressed as follows:

$$2\ SO_2 + O_2 \longrightarrow 2\ SO_3 \quad (3)$$

In the absence of an SCR system, this reaction will occur naturally in the atmosphere, but at a slower rate. Because of the corrosive nature of SO_3 and its potential to combine with NH_3 to form ammonium sulfates and other potentially condensible compounds most of the process vendors have improved their catalysts to minimize the conversion of SO_2 to SO_3. SCR systems which are currently in use convert from 1.5 to 2.5 percent or higher of SO_2 to SO_3 (1) whereas new catalysts are developed and tested to suppress conversion to less than one-half percent of the SO_2 to SO_3. (4) As in the case of the minimization of NH_3 breakthrough, the minimization of SO_3 formation is also in the economic interest of utilities, since it would minimize maintenance costs. Consequently, utilities can design SCR systems using catalysts which minimize SO_3 formation to substantially mitigate any potential adverse impacts of SCR on sulfate emissions.

Figure 2

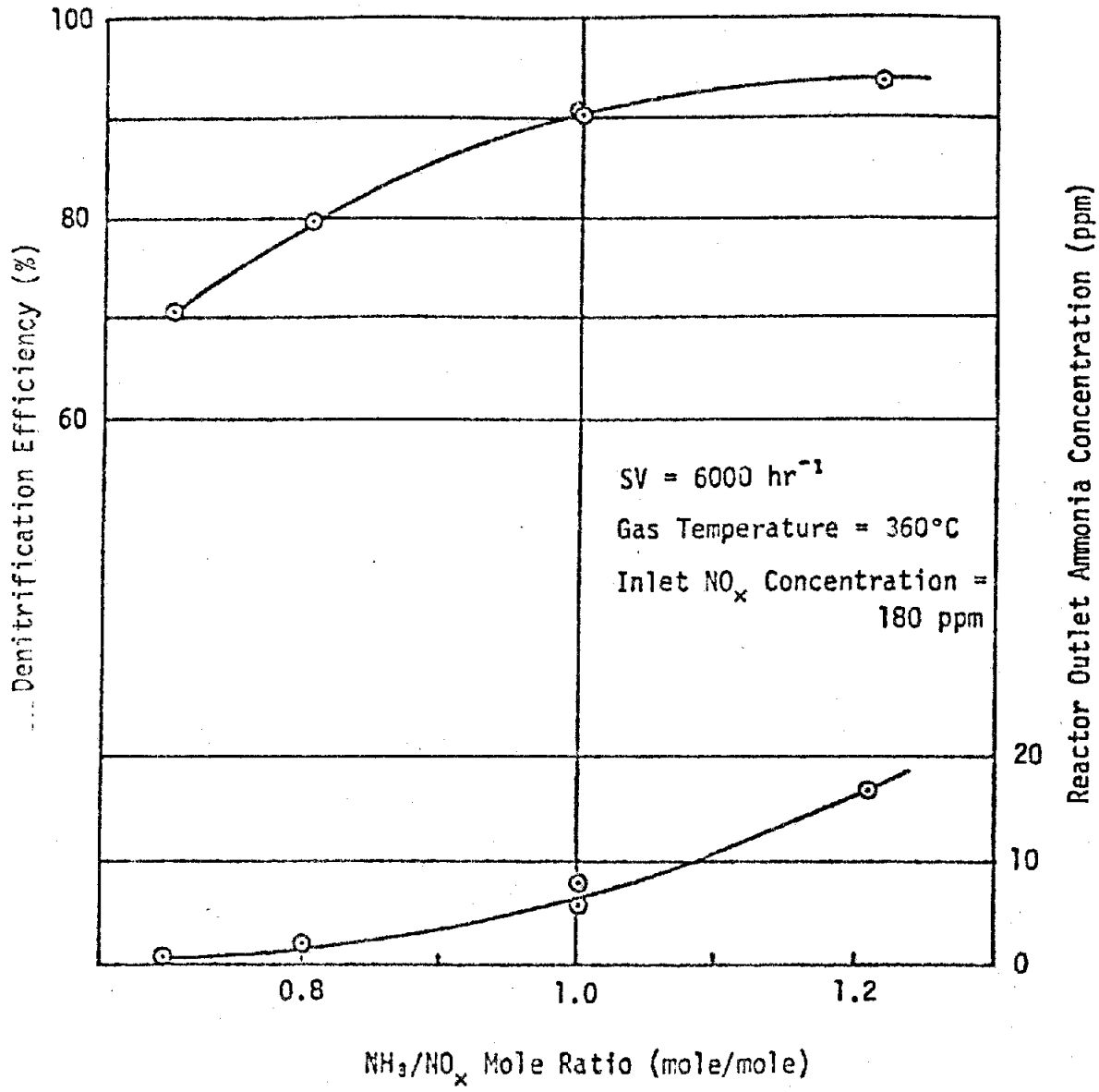

NH_3/NO_x mole ratio versus denitrification efficiency versus reactor outlet ammonia concentration for the honeycomb catalyst at Taketoyo Power Station.

Source: Reference 1.

Comment 6: LADWP has expressed concerns that the use of enough ammonia to effect a 90 percent NOx emission removal could result in the formation of ammonium sulfate ($(NH_4)_2SO_4$) and ammonium bisulfate (NH_4HSO_4) deposits which could foul the air preheater. Furthermore, LADWP believes that aerosols of these compounds could cause environmental problems, and their presence in the stack plume may cause opacity problems due to the presence of condensed particles.

Response: The formation of ammonium sulfate and ammonium bisulfate depends upon the concentrations of NH_3 and SO_3 in flue gas and also on the temperature of the flue gas. Ammonium bisulfate is formed as a result of the reaction between NH_3, SO_3, and water vapor as described in the following reaction:

$$NH_3 \text{ (gas)} + SO_3 \text{ (gas)} + H_2O \text{ (gas)} \longrightarrow NH_4HSO_4 \text{ (liquid)}$$

In the presence of excess ammonia, ammonium bisulfate may further react to form ammonium sulfate (solid) as follows:

$$NH_4HSO_4 \text{ (liquid)} + NH_3 \text{ (gas)} \longrightarrow (NH_4)_2SO_4 \text{ (solid)}$$

The conditions under which these compounds will be formed are shown in Figure 3.

As can be seen in Figure 3, actions which reduce both NH_3 carryover concentrations and SO_3 concentrations (as discussed in the responses to comments 4 and 5) will also result in lower temperatures of formation of ammonia-sulfur compounds, and thus would be expected to reduce the formation of such compounds. As discussed above, these actions, both individually and collectively, are expected to reduce potential operating and maintenance costs to the utilities. Therefore, minimization of NH_3 carryover concentrations and SO_3 concentrations are available mitigation actions which are expected to be fully implemented by the utilities and are in the economic interests of the utilities.

With regard to potential opacity problems, of the more than seventy commercial installations operating with SCR in Japan (7), the Board is unaware of any data noting opacity problems on any of these units. Furthermore, opacity (the darkness and visibility of stack emissions) is regulated by state law (Health and Safety Code Section 41701) and local air pollution control district regulations, and any adverse impacts will have to be mitigated by the utilities pursuant to these requirements.

Comment 7: LADWP has expressed concerns that ammonium sulfates formed as a result of the SCR process may produce deposits on the air preheater and force more frequent washings than would otherwise occur. An air preheater wash will create a large volume of waste water for disposal. LADWP estimates that depending upon the washing period, the additional waste water may range from 300,000 to 1,000,000 gallons and is concerned about the potential adverse environmental impact of disposal of such waste water. (LADWP did not specify whether the additional waste water use was projected on an annual basis or for some other time period.)

Figure 3

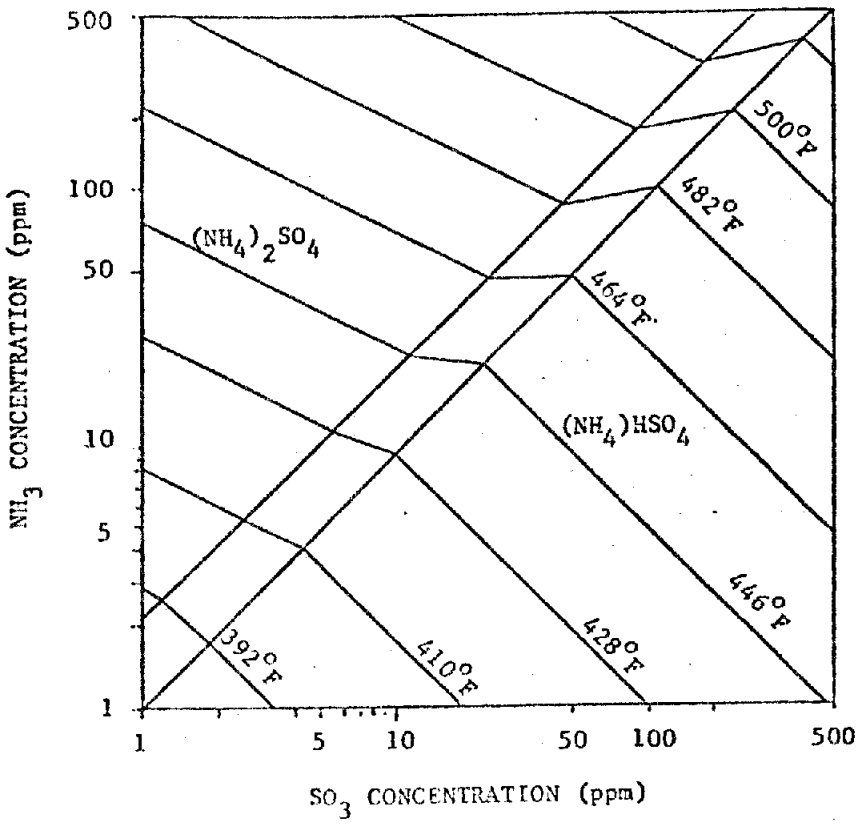

FORMATION OF AMMONIUM SULFATE
HIGH TEMPERATURE RANGE

Source: D.R. Swann, G.D. Drissel. Feasibility of Retrofitting Catalytic Post Combustion NOx Controls on an 80 MW Coal-Fired Utility Boiler. February 1980 (8)

Response: The LADWP estimate apparently applies to an annual generation rate for waste water under the assumption that 11 of its units, comprising 2593 MW, would be required to install SCR units designed for 90 percent NOx removal. The final version of Rules 1135.1 and 59.1 requires that only 3 units of LADWP, comprising 912 MW, would be required to be retrofit with SCR designed for 80 percent NOx removal. Consequently, the actual quantities of additional waste water generated due to the adopted rules will be significantly less than that estimated by LADWP. Furthermore, as explained above, the potential for formation of ammonium compounds can be minimized by techniques which are in the economic interest of utilities and which minimize NH_3 breakthrough emissions as well as the conversion of SO_2 to SO_3.

In addition, because air preheaters are periodically washed at the present time (without SCR installed), any additional waste water generated would be treated and disposed of in a manner similar to that currently used, and in accordance with requirements imposed by the State and Regional Water Quality Control Boards. Accordingly, any potential adverse environmental effects due to additional waste water disposal would thus be mitigated in accordance with regulations of those agencies having jurisdiction over water quality.

Comment 8: SCE expressed concerns regarding potential hazards of ammonia storage, handling, and transport and the possibility of accidental releases of ammonia. LADWP also expressed concerns regarding storage of ammonia.

Response: In order to evaluate the potential hazards of ammonia storage, handling and transportation, the ammonia-related hazardous materials incidents have been compared to all the hazardous materials incidents[4] in the U.S. in 1978. In addition, the amount of NH_3 required as a result of Rules 1135.1 and 59.1 is small compared with national statistics for ammonia shipments.

Table 1 compares ammonia related incidents with all hazardous materials incidents in the U.S. in 1978. As shown in this table, shipment of about 9 million tons of ammonia in 1978 resulted in spillage of about 188 tons (0.002%) in 95 incidents. These incidents resulted in 2 deaths, 58 injuries, and $98,000 in damages. By comparison, all hazardous materials incidents, totalling 17,750 in 1978 resulted in 46 deaths, 1072 injuries, and $16 million in damage. Table 1 also compares ammonia requirements of Rules 1135.1 and 59.1 with national average shipments and data on incidents. These data suggest a relatively low probability of incidents with relatively very low or negligible expected impacts.

Table 2 shows that the mean mortality index for ammonia is 0.02 as compared to the mean mortality index of hydrocarbons which ranges from 0.1-0.6. These data indicate that ammonia, which is commonly used in many household, commercial and industrial cleaning applications and which is used in agriculture in significant

---

4. A hazardous materials incident is defined in 49 CFR 171.15 (1977) according to criteria established by the U.S. Department of Transportation. Basically, these criteria include: accidental deaths or injuries, property damage in excess of $50,000, or other specified damages.

TABLE 1

ANHYDROUS AMMONIA STATISTICS

Total amounts of shipments of anhydrous ammonia in the U.S. in 1978		8.7 million tons
Total amount spilled of those shipments in the U.S. in 1978		188 tons
Statistics of the 17,750 incidents* in 1978 in the U.S.	Deaths Injuries Damages	46 1072 $16 million
Statistics of the 95 incidents involving anhydrous ammonia in 1978 in the U.S.	Deaths Injuries Damages	2 58 $98,000
Total amount of anhydrous ammonia used by agriculture in the U.S. in 1978		4.5 million tons
Total amount of anhydrous ammonia required to comply with the Rules		15,000 tons per year

*An incident is as defined in 49 CFR 171.15 (1977).

Source: U.S. Department of Transportation, National Fertilizer Association and ARB/SSCD

TABLE 2

ESTIMATE OF MEAN MORTALITY INDEX OF AMMONIA
AND ITS COMPARISON WITH OTHER GASES

LOCATION	DATE	AREA/SITE	SOURCE OF LEAKAGE	QUANTITY METRIC TON	NUMBER OF FATALITIES
Floral, Ark.	June 5, 1971	Rural	Pipeline	600 tons	0
Enid, Oklahoma	May 7, 1976	Urban	Pipeline	500	0
Conway, Kansas	December 6, 1973	Rural	Pipeline	277	0
Landskrona, Sweden	January 16, 1976	Port	Ship-storage connection	180	2
Blair, Nebraska	November 15, 1970	Rural	Storage tank	160	0
Crete, Nebraska	February 18, 1969	Urban	Rail tanker	90	9
Belle, West Va.	January 21, 1970	Urban	Rail tanker	75	0
Texas, Tx City	September 13, 1975	Urban	Pipeline	50	0
Potschefstroom, South Africa	July 13, 1973	Urban	Storage tank	38	18+
Houston, Texas	November 15, 1976	Urban	Road tanker	19	6
Lievin, France	August 21, 1968	Urban	Road tanker	19	6

Mean mortality index = $\frac{\text{total number fatalities}}{\text{total amount lost}}$

$= \frac{41}{2008}$

$= 0.02$

+Without this incident the mean mortality index = 0.01

Mean mortality index of chlorine = 0.3
" " " of flammable gases or vapor = 0.1 -0.6
" " " of Ammonium Nitrate = 0.1

Source: A report on Major Hazards by Advisors Committee, Health and Safety Commission, Great Britain, 1979.

quantities, is not particularly dangerous when handled with proper caution. Accordingly, mitigation measures expected to be taken by utilities to ensure minimization of potential hazards due to ammonia spillage, which would consist of implementation of standard safe operating practices for potentially hazardous materials, are expected to reduce potential hazards to very low or negligible levels.

Comment 9: LADWP, in its written testimony, expressed concerns regarding formation of hydrogen cyanide (HCN) by ammonia injection.

Response: Brown and Sawyer were not able to detect either HCN or other nitrogenous species (other than NOx, NH_3, or N_2) in the stack gas from a laboratory combustor burning No. 1 diesel doped with pyridine. (Quarterly Progress Report for ARB Contract A8-146-31 for 1 May - 1 July 1980). Based upon minimum detection limits associated with the various analytical procedures used, Brown and Sawyer estimated conservative upper limit concentration values of 5 ppm for all nitrogenous species (other than NOx, NH_3, and N_2) and 1 ppm for HCN in the laboratory combustor stack gas.

These data, taken along with SCE's and ARB's tracer studies, which show that emissions from tall stacks are diluted by a factor of 10^{-4} to 10^{-6} (7), show that the maximum surface level concentration of all nitrogenous species (other than NOx, NH_3, and N_2) is in the range of 5 to 500 parts per trillion and 1 to 100 parts per trillion for HCN, and may be substantially less.

A threshold limit value (TLV) of 10 parts per million has been designated for hydrogen cyanide (HCN), according to Multimedia Environmental Goals for Environmental Assessment, Volume II, MEG Charts and Background Information, J.G. Cleland and G.L. Kingsbury, November, 1977; EPA-600/7-77-136b. The ambient level goal recommended in that same work is 24 parts per billion, based on health effects. Documentation of the Threshold Limit Values for Substances in Workplace Air, (American Conference of Governmental Industrial Hygienists, Third Edition 1971), shows that the TLV of 10 parts per million "contains a two-fold margin of safety against mild symptoms of HCN response."

Thus, according to the test data, the highest ambient concentration expected would be a factor of more than 200 below EPA recommended environmental goals for the atmosphere.

Comment 10: SCE expressed concern that the Board's action would exacerbate ozone and oxidant air quality problems in the South Coast Air Basin.

Response: This concern is dealt with at length in the Board's Findings and Basis for decision, which is incorporated by reference herein.

CERTIFIED: Sally Rump
Sally Rump
Board Secretary

Date: Dec 23, 1980

References

1. Dr. Jumpei Ando, NOx Abatement for Stationary Sources in Japan, rpt. (Japan: Chou University, August 1979).

2. Proceedings of the Joint Symposium on Stationary Combustion NOx Control, Volume II, Utility Boiler NOx Control by Flue Gas Treatment, "Assessment of NOx Flue Gas Treatment Technology" by J. D. Moholey, U.S. EPA, IERL-RTP-1084, October 1980.

3. Sengoku Tadamasa, et al, The Development of a Catalytic NOx Reduction System For Coal-Fired Steam Generators (Tokyo, Japan; Mitsubishi Heavy Industries, October 6-9, 1980).

4. Proceedings of the Joint Symposium on Stationary Combustion NOx Control, Volume II, Utility Boiler NOx Control by Flue Gas Treatment, "Status of SCR Retrofit at Southern California Edison Huntington Beach Generating Station Unit 2", L. Johnson et al; U.S. EPA IERL-RTP-1084 October 1980.

5. Solid Waste Management in California: A Status Report, State of California, Solid Waste Management Board, February 1980.

6. A document from SCE titled "Emission of Vanadium and Organics from SCE Oil-Fired Generating Stations," November 24, 1980.

7. The Air Resources Board staff report entitled "Public Hearing to Reconsider Rule 1135.1 of the South Coast Air Quality Management District and Rule 59.1 of the Ventura County Air Pollution Control District Controlling Emissions of Oxides of Nitrogen from Power Plants." (September 1980)

8. D. R. Swann, G. D. Drissel. Feasibility of Retrofitting Catalytic Post Combustion NOx Controls on an 80 MW Coal-Fired Utility Boiler, rpt. (Denver, Colorado: Stearns-Roger Inc., February 1980).

9. State of California Air Resources Board Final Report of the Ad Hoc Panel on Atmospheric Carcinogens, April 1979.

10. Science Applications, Inc., Vol. I., Final Report, An Inventory of Carcinogenic Substances Released Into the Ambient Air of California, February 1979.

There are five basic alternatives which the Board could adopt in reconsidering SCAQMD Rule 1135.1 and VCAPCD Rule 59.1. Following are descriptions and discussions of these alternatives.

Alternative 1: Take no action; that is, the "no project" alternative. This alternative would, in effect, reaffirm the versions of SCAQMD Rule 1135.1 and VCAPCD Rule 59.1, currently stayed, both of which the Board adopted on March 27, 1980. This alternative would neither prevent nor mitigate the environmental and other concerns raised by the petitioner, SCE, and LADWP, the intervenor. It is with regard to the existing versions of these two rules that the environmental questions have been raised.

Alternative 2: Rescind SCAQMD Rule 1135.1 and VCAPCD 59.1. Under this alternative, further NOx emission reductions would not be required, and power plants would continue to be subject to the control prescribed by SCAQMD Rule 464 (125-225 ppm for gas-fired units and 225-325 ppm for oil-fired units) and by a comparable VCAPCD rule. Although this alternative would eliminate the concerns raised by SCE and LADWP, it would forego emission reductions of almost 60 tons per day of NOx by 1990. Currently, NOx emissions from stationary sources in the South Coast Air Shed are slightly over 450 tons per day. The nonattainment area plans for the South Coast Air Basin and the Ventura County Air Pollution Control District rely on these emission reductions to attain and maintain the national ambient air quality standards for nitrogen dioxide and suspended particulate matter and, in the case of Ventura, for ozone as well. Also, such reductions in the emissions of NOx are necessary if the state ambient air quality standards for nitrogen dioxide, suspended particulate matter, and visibility are to be attained and maintained. If those standards are not attained and maintained, the adverse effects on the public health and welfare that the standards are intended to prevent will not be prevented.

Because the federal Clean Air Act and the California Health and Safety Code require that the ambient air quality standards be attained and maintained in order to protect public health and welfare, withdrawal of Rules 1135.1 and 59.1 would require that new measures be adopted to effect equivalent reductions from other sources. That is, NOx control measures would have to be adopted for sources for which control methods have not yet been identified, or for which controls cost more for each pound of NOx reduction than those required by Rules 1135.1 and 59.1. Since all of the significant adverse environmental effects expected to result from the proposal can be mitigated, the benefit of achieving the 60 tons per day NOx emission reductions by controlling power plants is preferable to controlling other sources at this time because control of other sources may be accompanied by unknown environmental impacts.

If other, more costly or unidentified rules were not quickly adopted, this alternative would be inconsistent with state and federal laws, and would result in pollutant concentrations in the South Coast Air Shed which would be detrimental to the public health and welfare. This alternative is therefore infeasible, with significant adverse impacts on the environment.

Alternative 3: Amend Rules 1135.1 and 59.1 to be less stringent. Concerns raised by SCE and LADWP (such as increased environmental burdens of heavy metals from catalysts and emissions of ammonia) could be partially mitigated by making the existing rules less stringent. Although this alternative would still provide some cost-effective reductions in emissions of NOx, these emission reductions

would be less than the reductions that would result from the current rules. Therefore, the same problems discussed under Alternative 2 would apply, albeit to a lesser degree, to this alternative. Overall, the air quality benefit expected by implementation of the rules would be lost while the adverse impacts of the rules would not be commensurably reduced. This is especially true since all such impacts can be mitigated without loss of environmental benefits, or have been found not to be a problem.

Alternative 4: Rescind Rules 1135.1 and 59.1 and restore the South Coast Air Quality Management District's original Rule 475.1. This rule required a 90 percent reduction in emissions from every unit, a far more costly alternative since the utilities would not have the flexibility of selecting units to be controlled. This alternative would undoubtedly be unacceptable to SCE and LADWP because they petitioned the Board to set this rule aside in 1978. After hearing testimony on the rule, the Board found the rule to be inconsistent with Division 26 of the Health and Safety Code for several reasons and amended the rule on August 7, 1978. The Board found at that time that the rule imposed an unreasonable financial and engineering burden on the affected utilities and did not require best available technological and administrative practices. Nothing has changed in the interim to affect these findings; as a result, adoption of this alternative would result in a rule which would be in conflict with the Health and Safety Code. Furthermore, this alternative would exacerbate the environmental concerns raised by the two utilities. While from an air quality point of view this rule would achieve greater NOx reductions than the proposal, economic impacts of this alternative would render its application infeasible.

It also should be noted that the Ventura County Air Pollution Control District did not adopt a rule to control NOx emissions from power plants similar to Rule 475.1 adopted by the SCAQMD. Therefore, for consistency, the Board would have to consider adopting a similar rule for the VCAPCD.

Alternative 5: Amend Rules 1135.1 and 59.1 as proposed.

CONCLUSION

The Board finds that Alternative 5 is the most desirable of the alternatives listed.

Alternative 5 offers the potential of reducing emissions of NOx in the South Coast Air Shed by an amount nearly equivalent to the reductions that would result from the current versions of Rules 1135.1 and 59.1, while effectively lessening the significant environmental concerns raised by SCE and LADWP. This conclusion is based on the following:

1. The requirements of the amended Rules are clear, easily understood, and not subject to uncertainty.

2. The amended Rules require the utilities to install controls only on units that are certain to be in use as base-load units through 1990, and units which will have high capacity factors under any realistic oil and gas reduction scenario likely to occur.

3. The emission reductions resulting from implementing the amended Rules are needed to attain and maintain the state and national ambient air quality standards for nitrogen dioxide and total suspended particulate matter in the South Coast Air Basin, and for nitrogen dioxide, total suspended particulate matter, and ozone in the Ventura County Air Pollution Control District. These reductions are also needed to attain and maintain the state visibility standard.

4. Compliance with the amended rules can be achieved through installation of SCR on a limited number of units.

In addition, weakening of the rules would only partially mitigate the environmental concerns raised, while creating new, more serious concerns (e.g., increases in NOx emissions or NH_3). Most of the environmental concerns raised have been determined not to pose significant problems. Further, all legitimate concerns can be mitigated. The mitigation measures identified are either within the jurisdiction of other agencies, which are currently regulating the subject utilities, or are within the direct control of the utilities that raised the concerns. Further, the utilities have an economic interest in assuring that the measures are carried out. Finally, for the reasons identified in items 1 through 4 above, Alternative 5 will result in fewer potential adverse environmental impacts compared to Alternative 1, the no action alternative.

State of California

Memorandum

To : Huey D. Johnson
Secretary

Date : December 23, 1980

Subject : Filing of Notice of Decision of the Air Resources Board

From : Air Resources Board

Pursuant to Title 17, Section 60007(b), and in compliance with Air Resources Board certification under section 21080.5 of the Public Resources Code, the Air Resources Board hereby forwards for posting the attached notice of decision and response to environmental comments raised during the comment period.

Sally Rump

Sally Rump
BOARD SECRETARY

attach: Resolution 80-69
Resolution 80-69

RECEIVED BY
Office of the Secretary

DEC 23 1980

Resources Agency of California

RECEIVED BY
Office of the Secretary

DEC 23 1980

Resources Agency of California

State of California
AIR RESOURCES BOARD

Resolution 80-68

December 18, 1980

WHEREAS, Health and Safety Code Section 39003 provides that the Air Resources Board (the "Board") is the state agency charged with coordinating efforts to attain and maintain ambient air quality standards;

WHEREAS, Health and Safety Code Section 39002 provides that local and regional authorities have the primary responsibility for control of air pollution from all sources other than vehicular sources, and provides further that the Board shall undertake control activities in any area wherein it determines that the local or regional authority has failed to meet the responsibilities given to it by Division 26 of the Health and Safety Code or any other provision of law;

WHEREAS, Health and Safety Code Section 39500 provides that it is the intent of the Legislature that the Board shall coordinate, encourage and review the efforts of all levels of government as they affect air quality;

WHEREAS, Health and Safety Code Section 39600 provides that the Board shall do such acts as may be necessary for the proper execution of the powers and duties granted to, and imposed upon, the Board by Division 26 of the Health and Safety Code and by any other provision of law;

WHEREAS, Health and Safety Code Section 39602 designates the Board as the air pollution control agency for all purposes set forth in federal law; and provides further that the Board is responsible for preparation of the state implementation plan required by the Clean Air Act, and to this end shall coordinate the activities of all districts necessary to comply with that Act;

WHEREAS, Health and Safety Code Section 39605 provides that the Board may provide any assistance to any district;

WHEREAS, Health and Safety Code Section 40001 provides that the local districts shall adopt and enforce rules and regulations which assure that reasonable provision is made to achieve and maintain the state ambient air quality standards and shall also endeavor to achieve and maintain the federal ambient air quality standards;

WHEREAS, Health and Safety Code Section 40440, as presently in effect and as amended effective January 1, 1981, requires that the rules and regulations of the South Coast Air Quality Management District reflect the best available technological and administrative practices;

WHEREAS, Health and Safety Code Section 40462, as presently in effect and as amended effective January 1, 1981, requires that the South Coast Air Quality Management Plan provide for achievement of state ambient air quality standards at the earliest date achievable by application of all reasonable and available (or reasonably available) control measures and technologies;

State of California
AIR RESOURCES BOARD

Resolution 80-69

December 18, 1980

WHEREAS, Health and Safety Code Section 39003 provides that the Air Resources Board (the "Board") is the state agency charged with coordinating efforts to attain and maintain ambient air quality standards;

WHEREAS, Health and Safety Code Section 39002 provides that local and regional authorities have the primary responsibility for control of air pollution from all sources other than vehicular sources, and provides further that the Board shall undertake control activities in any area wherein it determines that the local or regional authority has failed to meet the responsibilities given to it by Division 26 of the Health and Safety Code or any other provision of law;

WHEREAS, Health and Safety Code Section 39500 provides that it is the intent of the Legislature that the Board shall coordinate, encourage and review the efforts of all levels of government as they affect air quality;

WHEREAS, Health and Safety Code Section 39600 provides that the Board shall do such acts as may be necessary for the proper execution of the powers and duties granted to, and imposed upon, the Board by Division 26 of the Health and Safety Code and by any other provision of law;

WHEREAS, Health and Safety Code Section 39602 designates the Board as the air pollution control agency for all purposes set forth in federal law; and provides further that the Board is responsible for preparation of the state implementation plan required by the Clean Air Act, and to this end shall coordinate the activities of all districts necessary to comply with that Act;

WHEREAS, Health and Safety Code Section 39605 provides that the Board may provide any assistance to any district;

WHEREAS, Health and Safety Code Section 40001 provides that the local districts shall adopt and enforce rules and regulations which assure that reasonable provision is made to achieve and maintain the state ambient air quality standards and shall also endeavor to achieve and maintain the federal ambient air quality standards;

WHEREAS, Section 107(a) of the Clean Air Act provides that it is the responsibility of each state to assure air quality within the entire geographic area of the state;

WHEREAS, Section 110(a)(1) of the Clean Air Act requires that each state adopt a plan which provides for the implementation, maintenance, and enforcement of national primary ambient air quality standards within each air quality control region of the state;

WHEREAS, Section 110(a)(2) of the Clean Air Act requires that such plan provide for the attainment of such standards as expeditiously as practicable;

WHEREAS, Section 172(a)(1) of the Clean Air Act requires that an implementation plan for nonattainment areas provide for the attainment of national primary ambient air quality standards as expeditiously as practicable and no later than December 31, 1982;

WHEREAS, Section 172(b)(2) of the Clean Air Act requires the implementation of all reasonably available control measures as expeditiously as practicable;

WHEREAS, Section 172(b)(3) of the Clean Air Act requires that such nonattainment area plans require reasonable further progress (as defined in section 171(1)) including such reduction in emissions from existing sources in the area as may be obtained through the adoption, at a minimum, of reasonably available control technology;

WHEREAS, Health and Safety Code Section 41650 provides that the Board shall adopt the nonattainment area plan approved by a designated air quality planning agency as part of the state implementation plan unless the Board finds that the nonattainment area plan will not meet the requirements of the Clean Air Act;

WHEREAS, the California Environmental Quality Act and Board regulations require that an action not be adopted as proposed if significant environmental impacts have been identified and there exist within the jurisdiction of the Board feasible mitigation measures or alternatives which would substantially lessen, mitigate or avoid such impacts;

WHEREAS, the Board, in Resolution 79-49, May 29, 1979, adopted Rule 59.1 for the Ventura County Air Pollution Control District in response to action of the Ventura County Board of Supervisors deferring such action to the Board;

WHEREAS, the Board, following notice and hearings held in January and March 1980, on March 27, 1980, adopted Resolution 80-23 in which it amended Rule 59.1;

WHEREAS, Southern California Edison ("SCE") petitioned the Board to reconsider Rule 59.1;

WHEREAS, public hearings have been held and the Board has considered all aspects of Rule 59.1 and has received and considered the evidence presented to it;

WHEREAS, as specifically set forth in the Statement of Findings and Response to Opposing Considerations adopted herewith and made a part of this Resolution, the Board finds:

That the provisions of Rule 59.1 are technologically feasible and cost-effective;

That the provisions of Rule 59.1 as amended are necessary to meet the requirements of the Clean Air Act;

That the provisions of Rule 59.1 as amended assure that reasonable provision is made to achieve state ambient air quality standards; and

That the provisions of Rule 59.1 as amended are appropriate to implement and effectuate the purposes of Division 26 of the Health and Safety Code.

WHEREAS, the Board further finds, in accordance with the requirements of CEQA and as set forth in detail in the Response to Significant Environmental Issues incorporated by reference herein:

That all adverse environmental effects found to be significant by the Board can be mitigated by the utilities pursuant to cost-effective operating procedures, are being minimized by improved catalyst design, or are within the jurisdiction of other public agencies which are currently regulating the activities generating such effects so as to mitigate any anticipated adverse impacts on the environment; and

That alternatives considered are either less effective in reducing NOx emissions and protecting public health and welfare, or are economically infeasible due to excessive increased costs to the utilities.

NOW, THEREFORE BE IT RESOLVED, that the Board amends VCAPCD Rule 59.1 as set forth in Attachment A hereto.

BE IT FURTHER RESOLVED, that the Executive Officer is directed to transmit Rule 59.1 as amended to the Environmental Protection Agency for inclusion in the California State Implementation Plan.

I certify that the above is a true and correct copy of Resolution 80-69, as adopted by the Air Resources Board.

Sally Rump

BOARD SECRETARY

Attachment A

Rule 59.1 of the Ventura County Air Pollution Control District as Amended by the California Air Resources Board

December 18, 1980

A. Applicability

This rule shall apply to any electric utility with a system of electric generating units the total rated capacity of which is more than 500 megawatts.

B. Definitions

Available units are those electric generating units in the system which, except during periods of regularly scheduled maintenance, can be operated without incurring more than the normally acceptable risk to the system, unit, or personnel, and for which fuel can be supplied for at least the next day's operation.

Baseline emissions are of oxides of nitrogen expressed in pounds of oxides of nitrogen (as nitrogen dioxide, NO_2) per hour at each of ten load points of equal increments from minimum load to 100 percent load for each unit of a utility as tested by the utility and as reported to the Air Pollution Control Officer in 1979. In the case of units for which no such report was submitted in 1979, each affected utility shall submit to the Air Pollution Control Officer source test data which show oxides of nitrogen (NOx) emission rates for 1979 at the load points specified herein.

Rated capacity is, for any electric generating unit, the lesser of the manufacturer's name-plate capacity in megawatts for the unit; or the capacity in megawatts to which a unit is restricted by a condition on the electric generating unit's permit to operate.

Steam generated electric capacity is the total rated electric capacity, as of January 1, 1978, of all units which produced electricity from electric generators driven by steam turbines located within the Ventura County Air Pollution Control District. Steam generated electric capacity does not include electric generating capacity of simple or combined cycle gas turbine units.

C. Requirement for Least NOx Dispatch

1. The owner or operator of an electric power generating system shall at all times operate the available units in the system in a manner that minimizes the rate of emissions of oxides of nitrogen from the system ("least NOx dispatch"). Simple cycle gas turbines are exempted from the least NOx dispatch requirements.

2.a. A plan detailing the method for meeting the requirements in subsection C.1. shall be submitted to the Air Pollution Control Officer for consideration no later than March 1, 1981. Within 60 days of receipt of such a plan, the Air Pollution Control Officer shall approve or disapprove the plan. In the event the plan is disapproved, the Air Pollution Control Officer shall notify the affected utility in writing, and shall state the grounds for the disapproval. Within 30 days of such notification, the affected utility shall submit a revised plan which eliminates the stated grounds of disapproval.

b. A revised plan shall also be submitted to the Air Pollution Control Officer within 30 days after a new or modified unit is added to the system or a unit is removed from the system. A revised plan submitted when a unit is added to or removed from the system shall be subject to the requirements for review, approval and revision set forth in subsection C.2.a. for the original plan.

3. Effective 30 days after approval by the Air Pollution Control Officer, the system shall be operated according to the approved plan.

4. Records relating to compliance with this section shall be kept in a manner and form specified by the Air Pollution Control Officer.

D. Requirements for Control

Any owner or operator of an affected electric power generating system shall limit the emissions of oxides of nitrogen from the steam generator of each electric generating unit with a rated capacity of 500 megawatts or more to not more than 20 percent of the baseline emissions. Such limit shall be achieved over the entire operating load range of each unit controlled.

E. Compliance Schedule

1.a. No later than December 1, 1983, each affected utility shall limit the emissions of one unit with a rated capacity greater than 300 megawatts to the levels specified in section D, provided that this provision shall not require an affected utility to attain such limit by December 1, 1983 on more than one such unit within its total system.

b. Except for the requirements of subsection E.1.a., all controls necessary to meet the requirements of this rule shall be installed no later than during the first regularly scheduled shutdown after October 1, 1985, for each unit on which controls are to be installed as specified in the compliance plan required by section E.2.

c. All units on which controls are to be installed as specified in the compliance plan required by section E.2. shall be controlled by December 31, 1989.

2. A final compliance plan shall be submitted to the Air Pollution Control Officer for consideration no later than March 1, 1981. The plan shall contain a list which identifies those units to be controlled and shall include a detailed description of the steps that will be taken to satisfy the requirements of subsections E.1.a., E.1.b., and E.1.c. The description shall contain a construction schedule for each unit on which controls are to be installed. Within 30 days of receipt of such a plan, the Air Pollution Control Officer shall approve or disapprove the plan. In the event the plan is disapproved, the Air Pollution Control Officer shall notify the affected utility in writing and state the grounds for the disapproval. Within 30 days of such notification, the affected utility shall submit a revised plan which eliminates the stated grounds for the disapproval.

F. Review of Rule

Within ninety days after one year's operation on any unit of 300 megawatts or greater capacity within an affected utility's electric power steam generating system of controls installed to achieve the emission reduction required by this rule and upon request by an affected utility, the District Board shall conduct a hearing to consider the experience gained in meeting the requirements of the rule; and whether further implementation of the rule remains reasonable and necessary to attain the objective of a 90 percent overall reduction in power plant NOx emissions in the South Coast Air Shed. The rule shall remain in effect pending such consideration. Upon request by the District Board, the State Air Resources Board shall conduct the hearing.

G. Severability

Except as otherwise provided in this Rule, if any portion of this Rule is found to be unenforceable, such finding shall have no effect on the enforceability of the remaining portions of the Rule. These remaining portions of the Rule shall continue to be in full force and effect.

State of California
AIR RESOURCES BOARD

Public Hearing to Reconsider Rule 1135.1 of the South Coast Air Quality Management District and Rule 59.1 of the Ventura County Air Pollution Control District Controlling Emissions of Oxides of Nitrogen from Power Plants

ARB Compliance with the California Environmental Quality Act (CEQA)

The following discussion is intended to explain how the ARB assures that any possible adverse environmental effects of its proposed actions will be identified and mitigated. As an environmental protection agency, the ARB is not required to prepare an Environmental Impact Report (EIR) on this project, but other written documentation prepared by the agency must describe the proposed activity with alternatives to the activity and mitigation measures to minimize any significant adverse environmental impact. Further, regulations adopted by the ARB require that the action will not be adopted by the Board as proposed if there are feasible alternatives or feasible mitigation measures which would substantially lessen any significant adverse impact of the activity on the environment. ARB regulations also require that prior to taking final action, the Board must respond in writing to significant environmental points raised during the evaluation process. Finally, CEQA requires that the ARB not adopt the activity for which significant adverse effects have been identified unless one or more of the following findings are made:

1. That changes have been incorporated into the project which mitigate the significant environmental impacts.

2. That such mitigation measures are within the responsibility and jurisdiction of another public agency and have been (or can and should be) adopted by such other agency.

3. That specific economic, social, or other considerations make the mitigation measures or alternatives infeasible.

Consequently, the ARB staff report discusses several possible environmental impacts of the proposed rule. Several other concerns were raised during the hearing process. These are identified and discussed in the following section. In addition, mitigation measures which could minimize any impacts found to be significant are examined, as are alternatives to the proposed action. In this case, since the proposal is the amendment of certain rules already in existence, the "no project" alternative is for the Board to take no action and to leave the current rules in place. Other alternatives discussed are the repeal of the subject rules in their entirety, amending the rules to be less stringent, and restoring the Districts' original Rules.

The Board, prior to taking final action, has adopted the attached responses to significant environmental issues. Further, in adopting the activity itself, the Board, in its resolution, has made findings relating to each significant environmental issue raised, either incorporating feasible mitigation measures and alternatives into the rules, indicating that other agencies are responsible for mitigation of these effects, or indicating the factors which prevent the imposition of mitigation measures or alternatives. If future experience reveals adverse environmental impacts not reasonably anticipated, corrective action can be taken by the Air Resources Board or other appropriate agency (e.g., the local air pollution control districts which will be implementing any adopted rule) to mitigate such effects.

State of California
AIR RESOURCES BOARD

Response to Significant Environmental Issues

Item: Public Hearing to Reconsider Rule 1135.1 of the South Coast Air Quality Management District and Rule 59.1 of the Ventura County Air Pollution Control District Controlling Emissions of Oxides of Nitrogen from Power Plants

Public Hearing Dates: November 5, 6, 13, and December 2, 3, 18, 1980

Response Date: December 18, 1980

Issuing Authority: Air Resources Board

Introduction: Southern California Edison (SCE) and the Los Angeles Department of Water and Power (LADWP) have raised several concerns which they believe were not adequately addressed by the Air Resources Board (ARB) staff in the September 1980 report. Since the discussion of many of the issues raised by the utilities assumes an understanding of the selective catalytic reduction (SCR) process, it is appropriate to explain briefly the operation and performance of the process involved.

The utilities are being required to reduce NOx emissions on some of their steam generating boilers by 80 percent. This requirement will probably be satisfied by retrofitting utility boilers with the selective catalytic reduction (SCR) system to control oxides of nitrogen (NOx) emissions. The technology takes advantage of the preferential reaction of ammonia (NH_3) with NOx rather than with other flue gas constituents. Since oxygen (O_2) enhances the reduction, the reaction can be best expressed as

$$4NH_3 + 4NO + O_2 \longrightarrow 4N_2 + 6H_2O \quad (1)$$

$$4NH_3 + 2NO_2 + O_2 \longrightarrow 3N_2 + 6H_2O \quad (2)$$

Equation 1 represents the predominate reaction since approximately 95 percent of the NOx in combustion flue gas is in the form of nitric oxide (NO). Therefore, under ideal conditions a stoichiometric amount of NH_3 can be used to reduce NOx to harmless molecular nitrogen (N_2) and water vapor (H_2O).

In practice, an NH_3:NO mole ratio of about 1:1 has typically reduced NO emissions by 90 percent with a residual NH_3 concentration (also called "ammonia breakthrough") of less than 10 ppm. (1)*

The SCR process requires other auxiliary equipment such as a reactor, a catalyst, ammonia storage facilities and ammonia injection systems.

The optimum temperature for the NOx reduction reaction without a catalyst is about 1800°F. However, the catalyst effectively reduces the optimum reaction temperature to approximately 600°F to 850°F.

*See reference list page 14.

Catalysts may be made with different chemical compounds; those with vanadium (V) compounds were found to promote the reduction of NOx with NH_3 and to be unaffected by the presence of sulfur oxides (SOx), another exhaust gas component which could interfere with the desirable reaction. (2)

Titanium dioxide (TiO_2) was found to be an acceptable carrier, since it is resistant to attack from SO_3. (2) Therefore, many SOx resistant catalysts are based on TiO_2 and vanadium pentoxide (V_2O_5).

The life of the catalyst depends upon the type of flue gases it is being used to treat. The catalysts to be used on power plants in the South Coast Air Basin should last for 2 years or longer. (3) Also, because of oil firing, catalysts will be most likely of the parallel flow type. It may have one of many shapes such as parallel plate, parallel tube or honeycomb type. It may be made of ceramic material such as TiO_2 or metal.

The catalyst may be of homogenous or of coated variety. In essence, the type of the catalyst to be used in the power plant depends upon the user and the process vendor. Figure 1 shows as an example of how, typically, a honeycomb type catalyst would be placed in a reactor. When the catalyst loses its reactivity, it is replaced.

The above explanation briefly summarizes the control methods that will likely be employed to retrofit the utility boilers to comply with Rules 1135.1 and 59.1. The discussion that follows addresses the concerns raised by SCE and LADWP and the Board's response to those concerns.

Comment 1: The LADWP has expressed concerns that disposal of spent catalyst in an environmentally sound manner is an unresolved problem and that because of the presence of vanadium in the catalyst, special disposal or reclamation methods will be required.

Response: The application of selective catalytic reduction to a total of 4432 MW of power plant capacity, as required to fully comply with Rules 1135.1 and 59.1, is expected to result in the use of about 1100 tons of catalyst per year.[1] The exact type and composition of catalyst would depend on the process vendor and the user, but typically a parallel flow, honeycomb type catalyst would contain V_2O_5 and titanium dioxide (TiO_2).

---

1. This estimate follows from a total generating capacity required to be controlled of 4432 megawatts (MW) and SCE's estimate (4) that control of its units larger than 175 MW (total of 24 units having 7720 MW) would require 1860 tons per year of catalyst, assuming a two year catalyst life:

$$4432 \text{ MW} \times \frac{1860 \text{ tons of catalyst/yr}}{7720 \text{ MW}} = 1068 \text{ tons catalyst/yr}$$

Based on commercial operating experience to date on SCR installations in Japan in which catalyst deterioration has not been significant (3) catalyst lifetimes are expected to equal or exceed 2 years with fuel oil firing and 3 years with natural gas firing. Requirements for catalyst are inversely related to catalyst lifetime, hence a catalyst lifetime of 3 years corresponds to a catalyst requirement of about 712 tons per year.

FIGURE 1

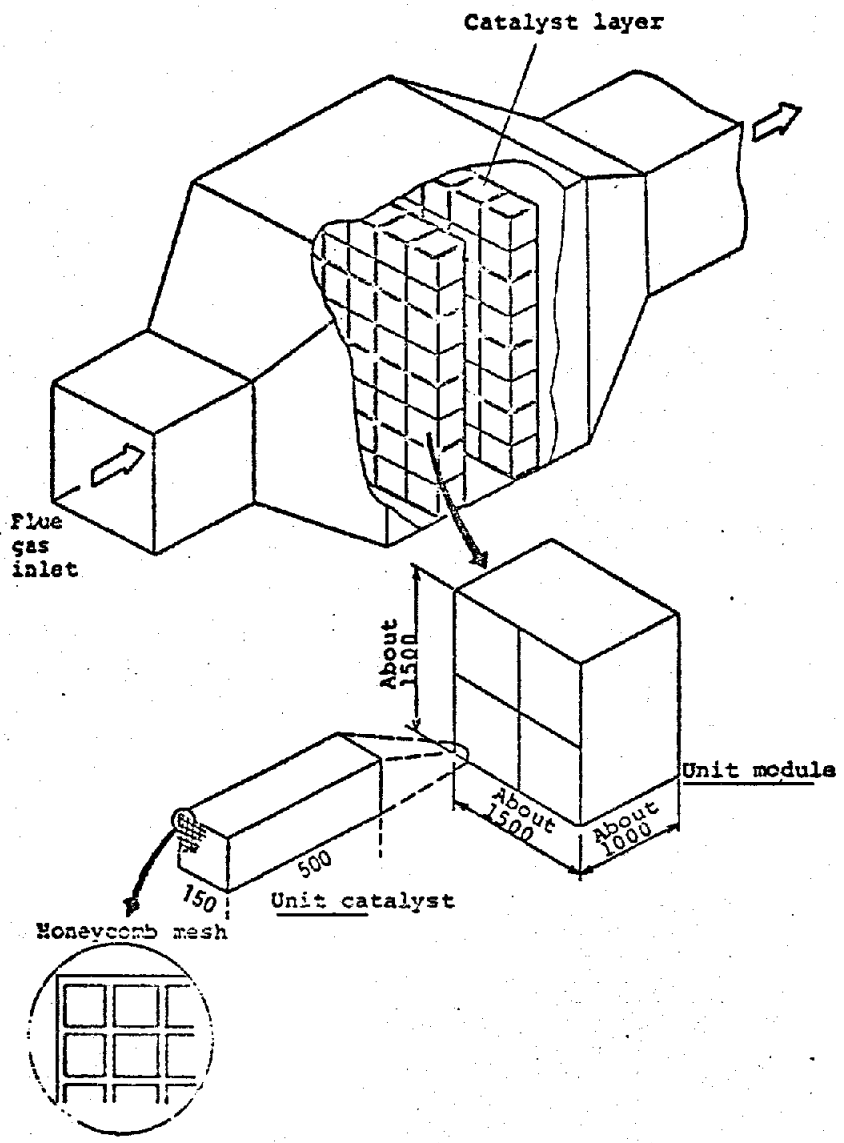

Example of a fixed bed reactor with honeycomb type catalyst (Ishikawajima-Harima Heavy Industries; sizes are in mm).

Source: J. Ando. NOx Attachment for Stationary Sources in Japan. August 1979.

Depending upon the specific type and material of the catalyst selected, valuable components may be recovered for reuse, just as used or "spent" automotive exhaust catalysts and refinery process catalysts are normally amenable to recovery or reprocessing prior to disposal. To the extent that spent catalyst cannot be recovered, and constitutes a potentially hazardous waste[2], treatment and/or disposal at a Class I or Class II-1 (hazardous waste) disposal site may be required. In such a worst case, the increment of potential hazardous waste generation due to Rules 1135.1 and 59.1 would be about 1100 tons per year, as compared with the current rate of generation of hazardous wastes in California of approximately 11,000,000 tons per year (5). Thus, full implementation of Rules 1135.1 and 59.1 is not expected to increase the production of potentially hazardous waste in California by more than about 0.01 percent, even in the worst case.

Mitigation of the above increments of hazardous waste disposal is accomplished by regulation of liquid and solid hazardous waste disposal in California by the State Water Resources Control Board (and Regional Boards), the Department of Health Services, and the Solid Waste Management Board. Through a system of hazardous waste generation reporting by the industry, and regulation by the above agencies to ensure environmentally sound disposal, the problem of hazardous waste disposal associated with the Board's action will be mitigated in the same manner as is the disposal of other toxic wastes.

Comment 2: Southern California Edison has expressed concerns that some of the toxic metals from catalysts that may be used in the SCR process can be released into the environment.

Response: The Board has received no evidence which demonstrates that catalysts which are used in the SCR process, as applied to oil or gas fired units to comply with Rules 1135.1 and 59.1, would result in significant increases in emissions of vanadium (V) or other potentially toxic metals from power plants.

Vanadium is a natural constituent of crude oil and is also contained in significant amounts in the (refined) residual oil burned in power plants in the South Coast Air Basin and Ventura County. (6) Thus, at the present time, combustion of fuel oil in the South Coast Air Basin and Ventura County is believed to result in significant release of vanadium into the environment. Based on data provided by SCE (6), and assuming 50 million barrels of oil per year burned in power plants (the minimum amount of oil burned by all utilities in any recent year), vanadium emissions are estimated to be about 120 tons per year[3] at the present time, i.e. absent further controls.

---

2. Depending upon the specific composition of the catalyst selected, "spent" catalyst may or may not be classified as a hazardous waste.

3. $$\frac{50 \times 10^6 \text{BBLS}}{\text{year}} \times \frac{320 \text{ lbs}}{\text{BBL}} \times \frac{15 \times 10^{-6} \text{ lbs V}}{\text{lb fuel oil}} \times \frac{\text{ton}}{2000 \text{ lbs}} = \frac{120 \text{ tons V}}{\text{yr}}$$

If this amount of vanadium is expressed as V_2O_5, an oxidized form, the amount of V_2O_5 is

$$\frac{120 \text{ tons V}}{\text{year}} \times \frac{182 \text{ tons } V_2O_5}{51 \text{ tons of V}} = 429 \text{ tons } V_2O_5/\text{yr}.$$

The Board is not aware of any other source of vanadium emissions, due to fuel burning, SCR, or any other source, which is larger than the above current emissions from power plants. Furthermore, the Board is not aware of any data which show that the retrofit of SCR to an oil or gas fired power plant would result in significantly increased emissions of vanadium or other components of the catalyst. To the contrary, available information from Japan indicates good catalyst performance over long periods (in excess of 2 years), suggesting that vanadium, the principal active component in the catalyst bed, remains essentially intact and continues to perform at, or near, full design efficiency. (3) Vanadium or vanadium compounds could potentially present risks as toxic compounds at elevated levels of human exposure; however, such compounds have not been identified as high priority toxic compounds at the present time, (9, 10) and evidence received by the Board does not support the concern that Rules 1135.1 and 59.1 would result in significant environmental impacts. If vanadium or vanadium compounds are identified as a significant threat or potential threat to human health or the environment at some future time, such compound(s) would be regulated in accordance with the statewide programs to control airborne toxic substances, including existing and future ARB and local district programs.

Comment 3: Southern California Edison has raised concerns that nitrosamines can be formed as a result of ammonia injection in flue gases for Thermal DeNOx and SCR processes.

Response: Representatives of SCE testified that with a model system using a propane/air flame, they have found a potential for formation of nitrosamines when ammonia is injected in the flue gases. Subsequent testimony by SCE indicated that the company's concerns regarding the formation of nitrosamines was based on injection of ammonia in a propane enriched flame. However, this situation would occur only during a boiler upset condition. It is standard operating practice at the present time to avoid any such possible upsets in order to ensure system safety and reliability. Consequently, since the utility boilers are carefully operated with excess air and are not fuel enriched, the hydrocarbon radical (essential to the formation of nitrosamines) would be completely oxidized and would not be available for the formation of nitrosamines in the presence of ammonia. Thus, no nitrosamines are expected to be formed if ammonia is injected in a normal operating mode of an electric utility boiler. Mitigation of possible impacts during boiler upset conditions consists of the utilities continuing current standard operating practices to avoid unsafe fuel-rich operation of a boiler.

Comment 4: LADWP has raised concerns regarding ammonia breakthrough to the atmosphere as a result of its injection in the noncatalytic and catalytic deNOx methods.

Response: As explained in the introduction, ammonia (NH_3) is injected in the flue gases to reduce NOx emissions through chemical reactions leading to the formation of harmless materials. Ideally, a stoichiometric (chemically correct) amount of NH_3 can be used to reduce 100 percent of the NOx to harmless molecular nitrogen and water vapor, with no ammonia breakthrough. However, in practice, the stoichiometric NH_3:NO mole ratio of 1:1, in the presence of a catalyst, will typically reduce NOx emissions by 90 percent with a residual NH_3 concentration of less than 10 parts per million (ppm). (1) In processes which reduce NOx without use of a catalyst, higher NH_3:NO mole ratios may be required for less than 90 percent reduction, resulting in slightly higher residual NH_3.

This residual NH_3 is commonly known as "NH_3 slip", "breakthrough", "carryover", or "release". This ammonia breakthrough is minimized by optimizing the design and operation of the catalytic and noncatalytic deNOx processes, as illustrated by the attached Figure 2. The attached figure shows that an SCR system, when operated for 90 percent NOx removal efficiency, is expected to result in NH_3 breakthrough in the range of 5-10 ppm in stack gases. However, SCR systems which are designed and operated for 80 percent NOx removal efficiency are expected to result in stack gas concentrations of less than 5 ppm of NH_3 carryover. As discussed in the ARB Staff Report of September 19, 1980 (7), ground level NH_3 concentrations at the point of maximum plume impact would be expected to be 1/1000 of the stack concentrations, resulting in ground level NH_3 concentrations below natural background levels and far below the level of any adverse health impacts which have been identified.

Because optimum operation of an SCR system to reduce NH_3 breakthrough would also minimize the consumption of NH_3 and the deposition of NH_3-based reaction products on components such as air preheaters, system design and operation to minimize NH_3 carryover is also in the economic interest of the system owner/operator, as this would minimize operating and maintenance expenditures. Thus, any remaining impact of NH_3 breakthrough would be fully mitigated by the utilities by system design and operation to minimize NH_3 emissions.

Comment 5: LADWP has expressed concerns that SCR systems promote the oxidation of sulfur dioxide (SO_2) to sulfur trioxide (SO_3) and that therefore the total sulfate concentration in the flue gas would be increased by the proposed rules. Furthermore, LADWP believes that increased sulfate emissions may adversely affect our ability to attain and maintain applicable ambient air quality standards and the public health and welfare which these standards are designed to protect.

Response: As explained in the introduction, SCR systems are used to facilitate NOx emission control. In addition to the two chemical reactions that convert NOx to N_2 and H_2O (see introduction), a third reaction also occurs, simultaneously. This third reaction is the oxidation of sulfur dioxide, a compound produced during the combusion of any fuel containing sulfur, to sulfur trioxide, and can be expressed as follows:

$$2\ SO_2 + O_2 \longrightarrow 2\ SO_3 \quad (3)$$

In the absence of an SCR system, this reaction will occur naturally in the atmosphere, but at a slower rate. Because of the corrosive nature of SO_3 and its potential to combine with NH_3 to form ammonium sulfates and other potentially condensible compounds most of the process vendors have improved their catalysts to minimize the conversion of SO_2 to SO_3. SCR systems which are currently in use convert from 1.5 to 2.5 percent or higher of SO_2 to SO_3 (1) whereas new catalysts are developed and tested to suppress conversion to less than one-half percent of the SO_2 to SO_3. (4) As in the case of the minimization of NH_3 breakthrough, the minimization of SO_3 formation is also in the economic interest of utilities, since it would minimize maintenance costs. Consequently, utilities can design SCR systems using catalysts which minimize SO_3 formation to substantially mitigate any potential adverse impacts of SCR on sulfate emissions.

Figure 2

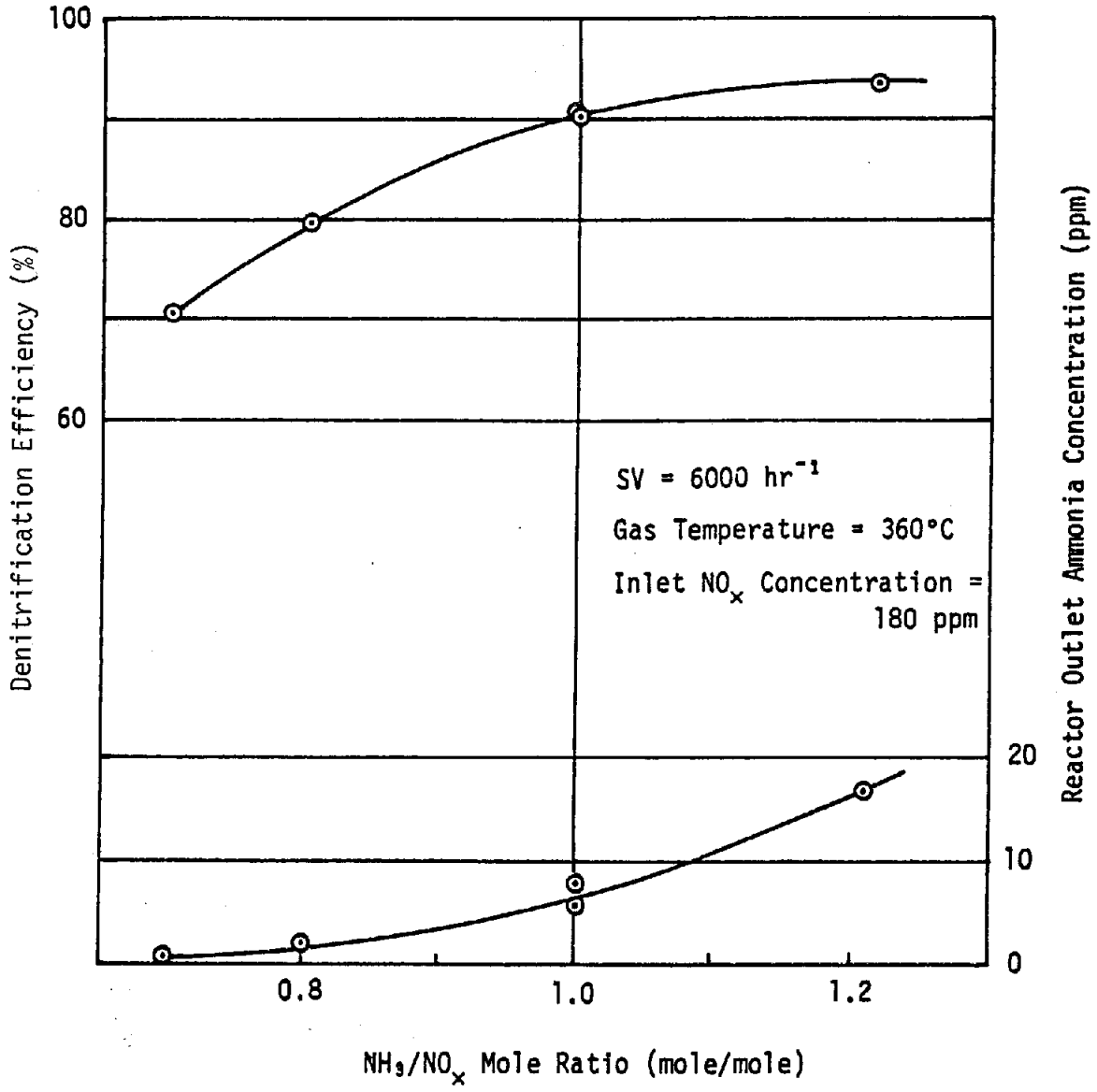

NH_3/NO_x mole ratio versus denitrification efficiency versus reactor outlet ammonia concentration for the honeycomb catalyst at Taketoyo Power Station.

Source: Reference 1.

Comment 6: LADWP has expressed concerns that the use of enough ammonia to effect a 90 percent NOx emission removal could result in the formation of ammonium sulfate ($(NH_4)_2SO_4$) and ammonium bisulfate (NH_4HSO_4) deposits which could foul the air preheater. Furthermore, LADWP believes that aerosols of these compounds could cause environmental problems, and their presence in the stack plume may cause opacity problems due to the presence of condensed particles.

Response: The formation of ammonium sulfate and ammonium bisulfate depends upon the concentrations of NH_3 and SO_3 in flue gas and also on the temperature of the flue gas. Ammonium bisulfate is formed as a result of the reaction between NH_3, SO_3, and water vapor as described in the following reaction:

$$NH_3 \text{ (gas)} + SO_3 \text{ (gas)} + H_2O \text{ (gas)} \longrightarrow NH_4HSO_4 \text{ (liquid)}$$

In the presence of excess ammonia, ammonium bisulfate may further react to form ammonium sulfate (solid) as follows:

$$NH_4HSO_4 \text{ (liquid)} + NH_3 \text{ (gas)} \longrightarrow (NH_4)_2SO_4 \text{ (solid)}$$

The conditions under which these compounds will be formed are shown in Figure 3.

As can be seen in Figure 3, actions which reduce both NH_3 carryover concentrations and SO_3 concentrations (as discussed in the responses to comments 4 and 5) will also result in lower temperatures of formation of ammonia-sulfur compounds, and thus would be expected to reduce the formation of such compounds. As discussed above, these actions, both individually and collectively, are expected to reduce potential operating and maintenance costs to the utilities. Therefore, minimization of NH_3 carryover concentrations and SO_3 concentrations are available mitigation actions which are expected to be fully implemented by the utilities and are in the economic interests of the utilities.

With regard to potential opacity problems, of the more than seventy commercial installations operating with SCR in Japan (7), the Board is unaware of any data noting opacity problems on any of these units. Furthermore, opacity (the darkness and visibility of stack emissions) is regulated by state law (Health and Safety Code Section 41701) and local air pollution control district regulations, and any adverse impacts will have to be mitigated by the utilities pursuant to these requirements.

Comment 7: LADWP has expressed concerns that ammonium sulfates formed as a result of the SCR process may produce deposits on the air preheater and force more frequent washings than would otherwise occur. An air preheater wash will create a large volume of waste water for disposal. LADWP estimates that depending upon the washing period, the additional waste water may range from 300,000 to 1,000,000 gallons and is concerned about the potential adverse environmental impact of disposal of such waste water. (LADWP did not specify whether the additional waste water use was projected on an annual basis or for some other time period.)

Figure 3

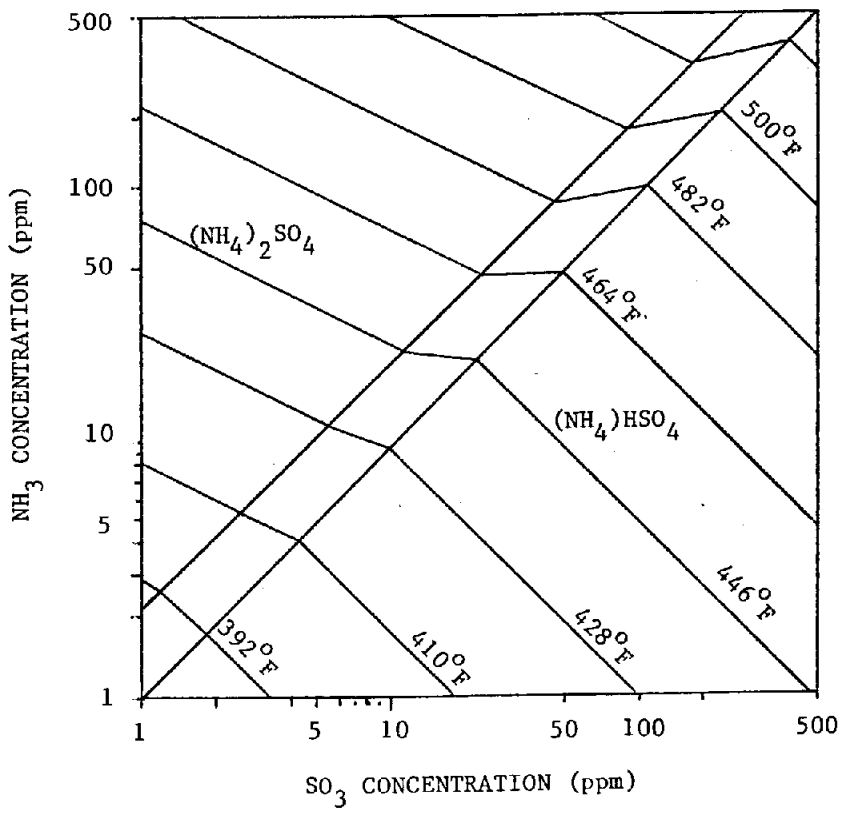

FORMATION OF AMMONIUM SULFATE
HIGH TEMPERATURE RANGE

Source: D.R. Swann, G.D. Drissel. Feasibility of Retrofitting Catalytic Post Combustion NOx Controls on an 80 MW Coal-Fired Utility Boiler. February 1980 (8)

Response: The LADWP estimate apparently applies to an annual generation rate for waste water under the assumption that 11 of its units, comprising 2593 MW, would be required to install SCR units designed for 90 percent NOx removal. The final version of Rules 1135.1 and 59.1 requires that only 3 units of LADWP, comprising 912 MW, would be required to be retrofit with SCR designed for 80 percent NOx removal. Consequently, the actual quantities of additional waste water generated due to the adopted rules will be significantly less than that estimated by LADWP. Furthermore, as explained above, the potential for formation of ammonium compounds can be minimized by techniques which are in the economic interest of utilities and which minimize NH_3 breakthrough emissions as well as the conversion of SO_2 to SO_3.

In addition, because air preheaters are periodically washed at the present time (without SCR installed), any additional waste water generated would be treated and disposed of in a manner similar to that currently used, and in accordance with requirements imposed by the State and Regional Water Quality Control Boards. Accordingly, any potential adverse environmental effects due to additional waste water disposal would thus be mitigated in accordance with regulations of those agencies having jurisdiction over water quality.

Comment 8: SCE expressed concerns regarding potential hazards of ammonia storage, handling, and transport and the possibility of accidental releases of ammonia. LADWP also expressed concerns regarding storage of ammonia.

Response: In order to evaluate the potential hazards of ammonia storage, handling and transportation, the ammonia-related hazardous materials incidents have been compared to all the hazardous materials incidents[4] in the U.S. in 1978. In addition, the amount of NH_3 required as a result of Rules 1135.1 and 59.1 is small compared with national statistics for ammonia shipments.

Table 1 compares ammonia related incidents with all hazardous materials incidents in the U.S. in 1978. As shown in this table, shipment of about 9 million tons of ammonia in 1978 resulted in spillage of about 188 tons (0.002%) in 95 incidents. These incidents resulted in 2 deaths, 58 injuries, and $98,000 in damages. By comparison, all hazardous materials incidents, totalling 17,750 in 1978 resulted in 46 deaths, 1072 injuries, and $16 million in damage. Table 1 also compares ammonia requirements of Rules 1135.1 and 59.1 with national average shipments and data on incidents. These data suggest a relatively low probability of incidents with relatively very low or negligible expected impacts.

Table 2 shows that the mean mortality index for ammonia is 0.02 as compared to the mean mortality index of hydrocarbons which ranges from 0.1-0.6. These data indicate that ammonia, which is commonly used in many household, commercial and industrial cleaning applications and which is used in agriculture in significant

---

4. A hazardous materials incident is defined in 49 CFR 171.15 (1977) according to criteria established by the U.S. Department of Transportation. Basically, these criteria include: accidental deaths or injuries, property damage in excess of $50,000, or other specified damages.

TABLE 1

ANHYDROUS AMMONIA STATISTICS

Total amounts of shipments of anhydrous ammonia in the U.S. in 1978		8.7 million tons
Total amount spilled of those shipments in the U.S. in 1978		188 tons
Statistics of the 17,750 incidents* in 1978 in the U.S.	Deaths Injuries Damages	46 1072 $16 million
Statistics of the 95 incidents involving anhydrous ammonia in 1978 in the U.S.	Deaths Injuries Damages	2 58 $98,000
Total amount of anhydrous ammonia used by agriculture in the U.S. in 1978		4.5 million tons
Total amount of anhydrous ammonia required to comply with the Rules		15,000 tons per year

*An incident is as defined in 49 CFR 171.15 (1977).

Source: U.S. Department of Transportation, National Fertilizer Association and ARB/SSCD

TABLE 2

ESTIMATE OF MEAN MORTALITY INDEX OF AMMONIA
AND ITS COMPARISON WITH OTHER GASES

LOCATION	DATE	AREA/SITE	SOURCE OF LEAKAGE	QUANTITY METRIC TON	NUMBER OF FATALITIES
Floral, Ark.	June 5, 1971	Rural	Pipeline	600 tons	0
Enid, Oklahoma	May 7, 1976	Urban	Pipeline	500	0
Conway, Kansas	December 6, 1973	Rural	Pipeline	277	0
Landskrona, Sweden	January 16, 1976	Port	Ship-storage connection	180	2
Blair, Nebraska	November 15, 1970	Rural	Storage tank	160	0
Crete, Nebraska	February 18, 1969	Urban	Rail tanker	90	9
Belle, West Va.	January 21, 1970	Urban	Rail tanker	75	0
Texas, Tx City	September 13, 1975	Urban	Pipeline	50	0
Potschefstroom, South Africa	July 13, 1973	Urban	Storage tank	38	18+
Houston, Texas	November 15, 1976	Urban	Road tanker	19	6
Lievin, France	August 21, 1968	Urban	Road tanker	19	6

Mean mortality index = $\frac{\text{total number fatalities}}{\text{total amount lost}}$

$= \frac{41}{2008}$

$= 0.02$

+Without this incident the mean mortality index = 0.01

Mean mortality index of chlorine = 0.3
" " " of flammable gases or vapor = 0.1 -0.6
" " " of Ammonium Nitrate = 0.1

Source: A report on Major Hazards by Advisors Committee, Health and Safety Commission, Great Britain, 1979.

quantities, is not particularly dangerous when handled with proper caution. Accordingly, mitigation measures expected to be taken by utilities to ensure minimization of potential hazards due to ammonia spillage, which would consist of implementation of standard safe operating practices for potentially hazardous materials, are expected to reduce potential hazards to very low or negligible levels.

Comment 9: LADWP, in its written testimony, expressed concerns regarding formation of hydrogen cyanide (HCN) by ammonia injection.

Response: Brown and Sawyer were not able to detect either HCN or other nitrogenous species (other than NOx, NH_3, or N_2) in the stack gas from a laboratory combustor burning No. 1 diesel doped with pyridine. (Quarterly Progress Report for ARB Contract A8-146-31 for 1 May - 1 July 1980). Based upon minimum detection limits associated with the various analytical procedures used, Brown and Sawyer estimated conservative upper limit concentration values of 5 ppm for all nitrogenous species (other than NOx, NH_3, and N_2) and 1 ppm for HCN in the laboratory combustor stack gas.

These data, taken along with SCE's and ARB's tracer studies, which show that emissions from tall stacks are diluted by a factor of 10^{-4} to 10^{-6} (7), show that the maximum surface level concentration of all nitrogenous species (other than NOx, NH_3, and N_2) is in the range of 5 to 500 parts per trillion and 1 to 100 parts per trillion for HCN, and may be substantially less.

A threshold limit value (TLV) of 10 parts per million has been designated for hydrogen cyanide (HCN), according to Multimedia Environmental Goals for Environmental Assessment, Volume 11, MEG Charts and Background Information, J.G. Cleland and G.L. Kingsbury, November, 1977; EPA-600/7-77-136b . The ambient level goal recommended in that same work is 24 parts per billion, based on health effects. Documentation of the Threshold Limit Values for Substances in Workplace Air, (American Conference of Governmental Industrial Hygienists, Third Edition 1971), shows that the TLV of 10 parts per million "contains a two-fold margin of safety against mild symptoms of HCN response."

Thus, according to the test data, the highest ambient concentration expected would be a factor of more than 200 below EPA recommended environmental goals for the atmosphere.

Comment 10: SCE expressed concern that the Board's action would exacerbate ozone and oxidant air quality problems in the South Coast Air Basin.

Response: This concern is dealt with at length in the Board's Findings and Basis for decision, which is incorporated by reference herein.

CERTIFIED: Sally Rump
Sally Rump
Board Secretary

Date: Dec 23, 1980

References

1. Dr. Jumpei Ando, NOx Abatement for Stationary Sources in Japan, rpt. (Japan: Chou University, August 1979).

2. Proceedings of the Joint Symposium on Stationary Combustion NOx Control, Volume II, Utility Boiler NOx Control by Flue Gas Treatment, "Assessment of NOx Flue Gas Treatment Technology" by J. D. Moholey, U.S. EPA, IERL-RTP-1084, October 1980.

3. Sengoku Tadamasa, et al, The Development of a Catalytic NOx Reduction System For Coal-Fired Steam Generators (Tokyo, Japan; Mitsubishi Heavy Industries, October 6-9, 1980).

4. Proceedings of the Joint Symposium on Stationary Combustion NOx Control, Volume II, Utility Boiler NOx Control by Flue Gas Treatment, "Status of SCR Retrofit at Southern California Edison Huntington Beach Generating Station Unit 2", L. Johnson et al; U.S. EPA IERL-RTP-1084 October 1980.

5. Solid Waste Management in California: A Status Report, State of California, Solid Waste Management Board, February 1980.

6. A document from SCE titled "Emission of Vanadium and Organics from SCE Oil-Fired Generating Stations," November 24, 1980.

7. The Air Resources Board staff report entitled "Public Hearing to Reconsider Rule 1135.1 of the South Coast Air Quality Management District and Rule 59.1 of the Ventura County Air Pollution Control District Controlling Emissions of Oxides of Nitrogen from Power Plants." (September 1980)

8. D. R. Swann, G. D. Drissel. Feasibility of Retrofitting Catalytic Post Combustion NOx Controls on an 80 MW Coal-Fired Utility Boiler, rpt. (Denver, Colorado: Stearns-Roger Inc., February 1980).

9. State of California Air Resources Board Final Report of the Ad Hoc Panel on Atmospheric Carcinogens, April 1979.

10. Science Applications, Inc., Vol. I., Final Report, An Inventory of Carcinogenic Substances Released Into the Ambient Air of California, February 1979.

Alternatives

There are five basic alternatives which the Board could adopt in reconsidering SCAQMD Rule 1135.1 and VCAPCD Rule 59.1. Following are descriptions and discussions of these alternatives.

Alternative 1: Take no action; that is, the "no project" alternative. This alternative would, in effect, reaffirm the versions of SCAQMD Rule 1135.1 and VCAPCD Rule 59.1, currently stayed, both of which the Board adopted on March 27, 1980. This alternative would neither prevent nor mitigate the environmental and other concerns raised by the petitioner, SCE, and LADWP, the intervenor. It is with regard to the existing versions of these two rules that the environmental questions have been raised.

Alternative 2: Rescind SCAQMD Rule 1135.1 and VCAPCD 59.1. Under this alternative, further NOx emission reductions would not be required, and power plants would continue to be subject to the control prescribed by SCAQMD Rule 464 (125-225 ppm for gas-fired units and 225-325 ppm for oil-fired units) and by a comparable VCAPCD rule. Although this alternative would eliminate the concerns raised by SCE and LADWP, it would forego emission reductions of almost 60 tons per day of NOx by 1990. Currently, NOx emissions from stationary sources in the South Coast Air Shed are slightly over 450 tons per day. The nonattainment area plans for the South Coast Air Basin and the Ventura County Air Pollution Control District rely on these emission reductions to attain and maintain the national ambient air quality standards for nitrogen dioxide and suspended particulate matter and, in the case of Ventura, for ozone as well. Also, such reductions in the emissions of NOx are necessary if the state ambient air quality standards for nitrogen dioxide, suspended particulate matter, and visibility are to be attained and maintained. If those standards are not attained and maintained, the adverse effects on the public health and welfare that the standards are intended to prevent will not be prevented.

Because the federal Clean Air Act and the California Health and Safety Code require that the ambient air quality standards be attained and maintained in order to protect public health and welfare, withdrawal of Rules 1135.1 and 59.1 would require that new measures be adopted to effect equivalent reductions from other sources. That is, NOx control measures would have to be adopted for sources for which control methods have not yet been identified, or for which controls cost more for each pound of NOx reduction than those required by Rules 1135.1 and 59.1. Since all of the significant adverse environmental effects expected to result from the proposal can be mitigated, the benefit of achieving the 60 tons per day NOx emission reductions by controlling power plants is preferable to controlling other sources at this time because control of other sources may be accompanied by unknown environmental impacts.

If other, more costly or unidentified rules were not quickly adopted, this alternative would be inconsistent with state and federal laws, and would result in pollutant concentrations in the South Coast Air Shed which would be detrimental to the public health and welfare. This alternative is therefore infeasible, with significant adverse impacts on the environment.

Alternative 3: Amend Rules 1135.1 and 59.1 to be less stringent. Concerns raised by SCE and LADWP (such as increased environmental burdens of heavy metals from catalysts and emissions of ammonia) could be partially mitigated by making the existing rules less stringent. Although this alternative would still provide some cost-effective reductions in emissions of NOx, these emission reductions

would be less than the reductions that would result from the current rules. Therefore, the same problems discussed under Alternative 2 would apply, albeit to a lesser degree, to this alternative. Overall, the air quality benefit expected by implementation of the rules would be lost while the adverse impacts of the rules would not be commensurably reduced. This is especially true since all such impacts can be mitigated without loss of environmental benefits, or have been found not to be a problem.

Alternative 4: Rescind Rules 1135.1 and 59.1 and restore the South Coast Air Quality Management District's original Rule 475.1. This rule required a 90 percent reduction in emissions from every unit, a far more costly alternative since the utilities would not have the flexibility of selecting units to be controlled. This alternative would undoubtedly be unacceptable to SCE and LADWP because they petitioned the Board to set this rule aside in 1978. After hearing testimony on the rule, the Board found the rule to be inconsistent with Division 26 of the Health and Safety Code for several reasons and amended the rule on August 7, 1978. The Board found at that time that the rule imposed an unreasonable financial and engineering burden on the affected utilities and did not require best available technological and administrative practices. Nothing has changed in the interim to affect these findings; as a result, adoption of this alternative would result in a rule which would be in conflict with the Health and Safety Code. Furthermore, this alternative would exacerbate the environmental concerns raised by the two utilities. While from an air quality point of view this rule would achieve greater NOx reductions than the proposal, economic impacts of this alternative would render its application infeasible.

It also should be noted that the Ventura County Air Pollution Control District did not adopt a rule to control NOx emissions from power plants similar to Rule 475.1 adopted by the SCAQMD. Therefore, for consistency, the Board would have to consider adopting a similar rule for the VCAPCD.

Alternative 5: Amend Rules 1135.1 and 59.1 as proposed.

CONCLUSION

The Board finds that Alternative 5 is the most desirable of the alternatives listed.

Alternative 5 offers the potential of reducing emissions of NOx in the South Coast Air Shed by an amount nearly equivalent to the reductions that would result from the current versions of Rules 1135.1 and 59.1, while effectively lessening the significant environmental concerns raised by SCE and LADWP. This conclusion is based on the following:

1. The requirements of the amended Rules are clear, easily understood, and not subject to uncertainty.

2. The amended Rules require the utilities to install controls only on units that are certain to be in use as base-load units through 1990, and units which will have high capacity factors under any realistic oil and gas reduction scenario likely to occur.

3. The emission reductions resulting from implementing the amended Rules are needed to attain and maintain the state and national ambient air quality standards for nitrogen dioxide and total suspended particulate matter in the South Coast Air Basin, and for nitrogen dioxide, total suspended particulate matter, and ozone in the Ventura County Air Pollution Control District. These reductions are also needed to attain and maintain the state visibility standard.

4. Compliance with the amended rules can be achieved through installation of SCR on a limited number of units.

In addition, weakening of the rules would only partially mitigate the environmental concerns raised, while creating new, more serious concerns (e.g., increases in NOx emissions or NH_3). Most of the environmental concerns raised have been determined not to pose significant problems. Further, all legitimate concerns can be mitigated. The mitigation measures identified are either within the jurisdiction of other agencies, which are currently regulating the subject utilities, or are within the direct control of the utilities that raised the concerns. Further, the utilities have an economic interest in assuring that the measures are carried out. Finally, for the reasons identified in items 1 through 4 above, Alternative 5 will result in fewer potential adverse environmental impacts compared to Alternative 1, the no action alternative.

State of California
AIR RESOURCES BOARD

Public Hearing to Reconsider Rule 1135.1 of the South Coast Air Quality Management District and Rule 59.1 of the Ventura County Air Pollution Control District Controlling Emissions of Oxides of Nitrogen from Power Plants

ARB Compliance with the California Environmental Quality Act (CEQA)

The following discussion is intended to explain how the ARB assures that any possible adverse environmental effects of its proposed actions will be identified and mitigated. As an environmental protection agency, the ARB is not required to prepare an Environmental Impact Report (EIR) on this project, but other written documentation prepared by the agency must describe the proposed activity with alternatives to the activity and mitigation measures to minimize any significant adverse environmental impact. Further, regulations adopted by the ARB require that the action will not be adopted by the Board as proposed if there are feasible alternatives or feasible mitigation measures which would substantially lessen any significant adverse impact of the activity on the environment. ARB regulations also require that prior to taking final action, the Board must respond in writing to significant environmental points raised during the evaluation process. Finally, CEQA requires that the ARB not adopt the activity for which significant adverse effects have been identified unless one or more of the following findings are made:

1. That changes have been incorporated into the project which mitigate the significant environmental impacts.

2. That such mitigation measures are within the responsibility and jurisdiction of another public agency and have been (or can and should be) adopted by such other agency.

3. That specific economic, social, or other considerations make the mitigation measures or alternatives infeasible.

Consequently, the ARB staff report discusses several possible environmental impacts of the proposed rule. Several other concerns were raised during the hearing process. These are identified and discussed in the following section. In addition, mitigation measures which could minimize any impacts found to be significant are examined, as are alternatives to the proposed action. In this case, since the proposal is the amendment of certain rules already in existence, the "no project" alternative is for the Board to take no action and to leave the current rules in place. Other alternatives discussed are the repeal of the subject rules in their entirety, amending the rules to be less stringent, and restoring the Districts' original Rules.

RECEIVED BY
Office of the Secretary

DEC 23 1980

Resources Agency of California

The Board, prior to taking final action, has adopted the attached responses to significant environmental issues. Further, in adopting the activity itself, the Board, in its resolution, has made findings relating to each significant environmental issue raised, either incorporating feasible mitigation measures and alternatives into the rules, indicating that other agencies are responsible for mitigation of these effects, or indicating the factors which prevent the imposition of mitigation measures or alternatives. If future experience reveals adverse environmental impacts not reasonably anticipated, corrective action can be taken by the Air Resources Board or other appropriate agency (e.g., the local air pollution control districts which will be implementing any adopted rule) to mitigate such effects.

State of California
AIR RESOURCES BOARD

Response to Significant Environmental Issues

Item: Public Hearing to Reconsider Rule 1135.1 of the South Coast Air Quality Management District and Rule 59.1 of the Ventura County Air Pollution Control District Controlling Emissions of Oxides of Nitrogen from Power Plants

Public Hearing Dates: November 5, 6, 13, and December 2, 3, 18, 1980

Response Date: December 18, 1980

Issuing Authority: Air Resources Board

Introduction: Southern California Edison (SCE) and the Los Angeles Department of Water and Power (LADWP) have raised several concerns which they believe were not adequately addressed by the Air Resources Board (ARB) staff in the September 1980 report. Since the discussion of many of the issues raised by the utilities assumes an understanding of the selective catalytic reduction (SCR) process, it is appropriate to explain briefly the operation and performance of the process involved.

The utilities are being required to reduce NOx emissions on some of their steam generating boilers by 80 percent. This requirement will probably be satisfied by retrofitting utility boilers with the selective catalytic reduction (SCR) system to control oxides of nitrogen (NOx) emissions. The technology takes advantage of the preferential reaction of ammonia (NH_3) with NOx rather than with other flue gas constituents. Since oxygen (O_2) enhances the reduction, the reaction can be best expressed as

$$4NH_3 + 4NO + O_2 \longrightarrow 4N_2 + 6H_2O \quad (1)$$

$$4NH_3 + 2NO_2 + O_2 \longrightarrow 3N_2 + 6H_2O \quad (2)$$

Equation 1 represents the predominate reaction since approximately 95 percent of the NOx in combustion flue gas is in the form of nitric oxide (NO). Therefore, under ideal conditions a stoichiometric amount of NH_3 can be used to reduce NOx to harmless molecular nitrogen (N_2) and water vapor (H_2O).

In practice, an NH_3:NO mole ratio of about 1:1 has typically reduced NO emissions by 90 percent with a residual NH_3 concentration (also called "ammonia breakthrough") of less than 10 ppm. (1)*

The SCR process requires other auxiliary equipment such as a reactor, a catalyst, ammonia storage facilities and ammonia injection systems.

The optimum temperature for the NOx reduction reaction without a catalyst is about 1800°F. However, the catalyst effectively reduces the optimum reaction temperature to approximately 600°F to 850°F.

*See reference list page 14.

Catalysts may be made with different chemical compounds; those with vanadium (V) compounds were found to promote the reduction of NOx with NH_3 and to be unaffected by the presence of sulfur oxides (SOx), another exhaust gas component which could interfere with the desirable reaction. (2)

Titanium dioxide (TiO_2) was found to be an acceptable carrier, since it is resistant to attack from SO_3. (2) Therefore, many SOx resistant catalysts are based on TiO_2 and vanadium pentoxide (V_2O_5).

The life of the catalyst depends upon the type of flue gases it is being used to treat. The catalysts to be used on power plants in the South Coast Air Basin should last for 2 years or longer. (3) Also, because of oil firing, catalysts will be most likely of the parallel flow type. It may have one of many shapes such as parallel plate, parallel tube or honeycomb type. It may be made of ceramic material such as TiO_2 or metal.

The catalyst may be of homogenous or of coated variety. In essence, the type of the catalyst to be used in the power plant depends upon the user and the process vendor. Figure 1 shows as an example of how, typically, a honeycomb type catalyst would be placed in a reactor. When the catalyst loses its reactivity, it is replaced.

The above explanation briefly summarizes the control methods that will likely be employed to retrofit the utility boilers to comply with Rules 1135.1 and 59.1. The discussion that follows addresses the concerns raised by SCE and LADWP and the Board's response to those concerns.

Comment 1: The LADWP has expressed concerns that disposal of spent catalyst in an environmentally sound manner is an unresolved problem and that because of the presence of vanadium in the catalyst, special disposal or reclamation methods will be required.

Response: The application of selective catalytic reduction to a total of 4432 MW of power plant capacity, as required to fully comply with Rules 1135.1 and 59.1, is expected to result in the use of about 1100 tons of catalyst per year.[1] The exact type and composition of catalyst would depend on the process vendor and the user, but typically a parallel flow, honeycomb type catalyst would contain V_2O_5 and titanium dioxide (TiO_2).

---

1. This estimate follows from a total generating capacity required to be controlled of 4432 megawatts (MW) and SCE's estimate (4) that control of its units larger than 175 MW (total of 24 units having 7720 MW) would require 1860 tons per year of catalyst, assuming a two year catalyst life:

$$4432 \text{ MW} \times \frac{1860 \text{ tons of catalyst/yr}}{7720 \text{ MW}} = 1068 \text{ tons catalyst/yr}$$

Based on commercial operating experience to date on SCR installations in Japan in which catalyst deterioration has not been significant (3) catalyst lifetimes are expected to equal or exceed 2 years with fuel oil firing and 3 years with natural gas firing. Requirements for catalyst are inversely related to catalyst lifetime, hence a catalyst lifetime of 3 years corresponds to a catalyst requirement of about 712 tons per year.

FIGURE 1

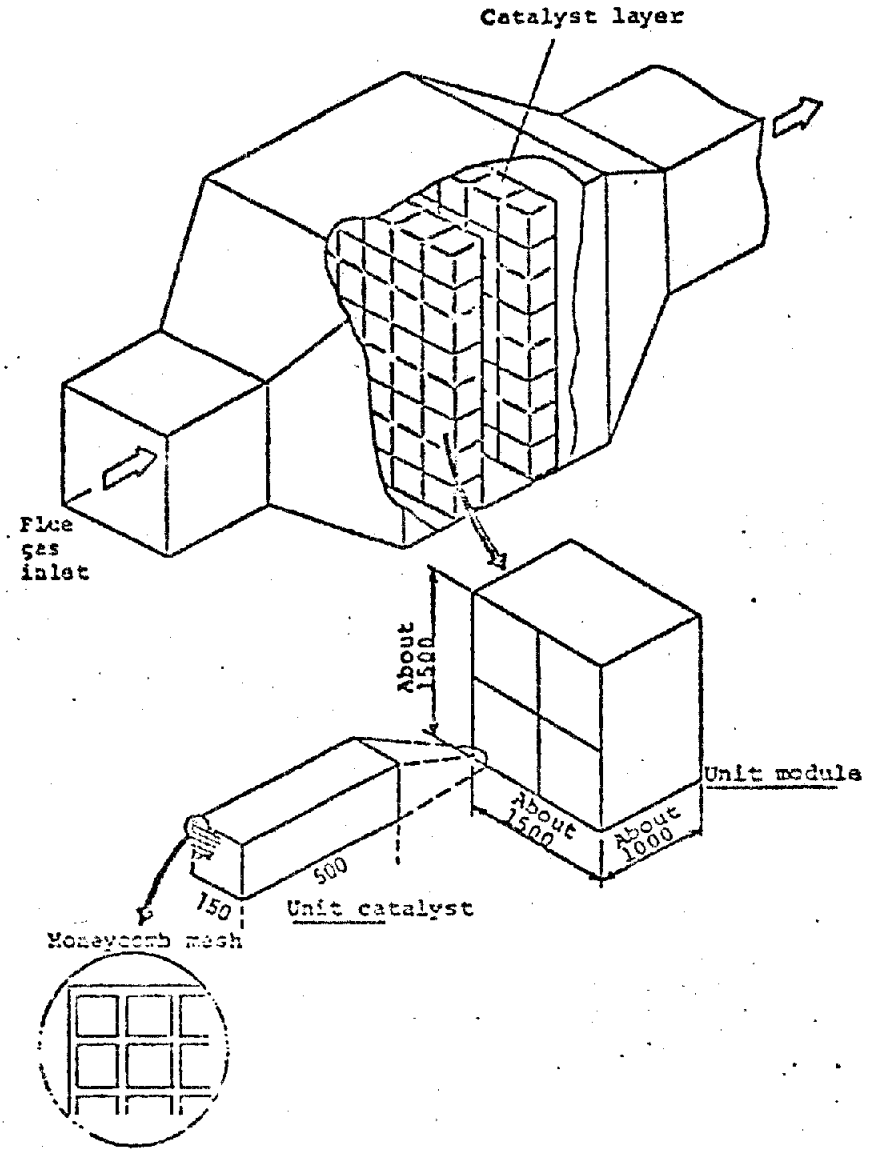

Example of a fixed bed reactor with honeycomb type catalyst (Ishikawajima-Harima Heavy Industries; sizes are in mm).

Source: J. Ando. NOx Attachment for Stationary Sources in Japan. August 1979.

Depending upon the specific type and material of the catalyst selected, valuable components may be recovered for reuse, just as used or "spent" automotive exhaust catalysts and refinery process catalysts are normally amenable to recovery or reprocessing prior to disposal. To the extent that spent catalyst cannot be recovered, and constitutes a potentially hazardous waste[2], treatment and/or disposal at a Class I or Class II-1 (hazardous waste) disposal site may be required. In such a worst case, the increment of potential hazardous waste generation due to Rules 1135.1 and 59.1 would be about 1100 tons per year, as compared with the current rate of generation of hazardous wastes in California of approximately 11,000,000 tons per year (5). Thus, full implementation of Rules 1135.1 and 59.1 is not expected to increase the production of potentially hazardous waste in California by more than about 0.01 percent, even in the worst case.

Mitigation of the above increments of hazardous waste disposal is accomplished by regulation of liquid and solid hazardous waste disposal in California by the State Water Resources Control Board (and Regional Boards), the Department of Health Services, and the Solid Waste Management Board. Through a system of hazardous waste generation reporting by the industry, and regulation by the above agencies to ensure environmentally sound disposal, the problem of hazardous waste disposal associated with the Board's action will be mitigated in the same manner as is the disposal of other toxic wastes.

Comment 2: Southern California Edison has expressed concerns that some of the toxic metals from catalysts that may be used in the SCR process can be released into the environment.

Response: The Board has received no evidence which demonstrates that catalysts which are used in the SCR process, as applied to oil or gas fired units to comply with Rules 1135.1 and 59.1, would result in significant increases in emissions of vanadium (V) or other potentially toxic metals from power plants.

Vanadium is a natural constituent of crude oil and is also contained in significant amounts in the (refined) residual oil burned in power plants in the South Coast Air Basin and Ventura County. (6) Thus, at the present time, combustion of fuel oil in the South Coast Air Basin and Ventura County is believed to result in significant release of vanadium into the environment. Based on data provided by SCE (6), and assuming 50 million barrels of oil per year burned in power plants (the minimum amount of oil burned by all utilities in any recent year), vanadium emissions are estimated to be about 120 tons per year[3] at the present time, i.e. absent further controls.

---

2. Depending upon the specific composition of the catalyst selected, "spent" catalyst may or may not be classified as a hazardous waste.

3. $$\frac{50 \times 10^6 \text{BBLS}}{\text{year}} \times \frac{320 \text{ lbs}}{\text{BBL}} \times \frac{15 \times 10^{-6} \text{ lbs V}}{\text{lb fuel oil}} \times \frac{\text{ton}}{2000 \text{ lbs}} = \frac{120 \text{ tons V}}{\text{yr}}$$

If this amount of vanadium is expressed as V_2O_5, an oxidized form, the amount of V_2O_5 is

$$\frac{120 \text{ tons V}}{\text{year}} \times \frac{182 \text{ tons } V_2O_5}{51 \text{ tons of V}} = 429 \text{ tons } V_2O_5/\text{yr}.$$

The Board is not aware of any other source of vanadium emissions, due to fuel burning, SCR, or any other source, which is larger than the above current emissions from power plants. Furthermore, the Board is not aware of any data which show that the retrofit of SCR to an oil or gas fired power plant would result in significantly increased emissions of vanadium or other components of the catalyst. To the contrary, available information from Japan indicates good catalyst performance over long periods (in excess of 2 years), suggesting that vanadium, the principal active component in the catalyst bed, remains essentially intact and continues to perform at, or near, full design efficiency. (3) Vanadium or vanadium compounds could potentially present risks as toxic compounds at elevated levels of human exposure; however, such compounds have not been identified as high priority toxic compounds at the present time, (9, 10) and evidence received by the Board does not support the concern that Rules 1135.1 and 59.1 would result in significant environmental impacts. If vanadium or vanadium compounds are identified as a significant threat or potential threat to human health or the environment at some future time, such compound(s) would be regulated in accordance with the statewide programs to control airborne toxic substances, including existing and future ARB and local district programs.

Comment 3: Southern California Edison has raised concerns that nitrosamines can be formed as a result of ammonia injection in flue gases for Thermal DeNOx and SCR processes.

Response: Representatives of SCE testified that with a model system using a propane/air flame, they have found a potential for formation of nitrosamines when ammonia is injected in the flue gases. Subsequent testimony by SCE indicated that the company's concerns regarding the formation of nitrosamines was based on injection of ammonia in a propane enriched flame. However, this situation would occur only during a boiler upset condition. It is standard operating practice at the present time to avoid any such possible upsets in order to ensure system safety and reliability. Consequently, since the utility boilers are carefully operated with excess air and are not fuel enriched, the hydrocarbon radical (essential to the formation of nitrosamines) would be completely oxidized and would not be available for the formation of nitrosamines in the presence of ammonia. Thus, no nitrosamines are expected to be formed if ammonia is injected in a normal operating mode of an electric utility boiler. Mitigation of possible impacts during boiler upset conditions consists of the utilities continuing current standard operating practices to avoid unsafe fuel-rich operation of a boiler.

Comment 4: LADWP has raised concerns regarding ammonia breakthrough to the atmosphere as a result of its injection in the noncatalytic and catalytic deNOx methods.

Response: As explained in the introduction, ammonia (NH_3) is injected in the flue gases to reduce NOx emissions through chemical reactions leading to the formation of harmless materials. Ideally, a stoichiometric (chemically correct) amount of NH_3 can be used to reduce 100 percent of the NOx to harmless molecular nitrogen and water vapor, with no ammonia breakthrough. However, in practice, the stoichiometric NH_3:NO mole ratio of 1:1, in the presence of a catalyst, will typically reduce NOx emissions by 90 percent with a residual NH_3 concentration of less than 10 parts per million (ppm). (1) In processes which reduce NOx without use of a catalyst, higher NH_3:NO mole ratios may be required for less than 90 percent reduction, resulting in slightly higher residual NH_3.

This residual NH_3 is commonly known as "NH_3 slip", "breakthrough", "carryover", or "release". This ammonia breakthrough is minimized by optimizing the design and operation of the catalytic and noncatalytic deNOx processes, as illustrated by the attached Figure 2. The attached figure shows that an SCR system, when operated for 90 percent NOx removal efficiency, is expected to result in NH_3 breakthrough in the range of 5-10 ppm in stack gases. However, SCR systems which are designed and operated for 80 percent NOx removal efficiency are expected to result in stack gas concentrations of less than 5 ppm of NH_3 carryover. As discussed in the ARB Staff Report of September 19, 1980 (7), ground level NH_3 concentrations at the point of maximum plume impact would be expected to be 1/1000 of the stack concentrations, resulting in ground level NH_3 concentrations below natural background levels and far below the level of any adverse health impacts which have been identified.

Because optimum operation of an SCR system to reduce NH_3 breakthrough would also minimize the consumption of NH_3 and the deposition of NH_3-based reaction products on components such as air preheaters, system design and operation to minimize NH_3 carryover is also in the economic interest of the system owner/operator, as this would minimize operating and maintenance expenditures. Thus, any remaining impact of NH_3 breakthrough would be fully mitigated by the utilities by system design and operation to minimize NH_3 emissions.

Comment 5: LADWP has expressed concerns that SCR systems promote the oxidation of sulfur dioxide (SO_2) to sulfur trioxide (SO_3) and that therefore the total sulfate concentration in the flue gas would be increased by the proposed rules. Furthermore, LADWP believes that increased sulfate emissions may adversely affect our ability to attain and maintain applicable ambient air quality standards and the public health and welfare which these standards are designed to protect.

Response: As explained in the introduction, SCR systems are used to facilitate NOx emission control. In addition to the two chemical reactions that convert NOx to N_2 and H_2O (see introduction), a third reaction also occurs, simultaneously. This third reaction is the oxidation of sulfur dioxide, a compound produced during the combusion of any fuel containing sulfur, to sulfur trioxide, and can be expressed as follows:

$$2\ SO_2 + O_2 \longrightarrow 2\ SO_3 \quad (3)$$

In the absence of an SCR system, this reaction will occur naturally in the atmosphere, but at a slower rate. Because of the corrosive nature of SO_3 and its potential to combine with NH_3 to form ammonium sulfates and other potentially condensible compounds most of the process vendors have improved their catalysts to minimize the conversion of SO_2 to SO_3. SCR systems which are currently in use convert from 1.5 to 2.5 percent or higher of SO_2 to SO_3 (1) whereas new catalysts are developed and tested to suppress conversion to less than one-half percent of the SO_2 to SO_3. (4) As in the case of the minimization of NH_3 breakthrough, the minimization of SO_3 formation is also in the economic interest of utilities, since it would minimize maintenance costs. Consequently, utilities can design SCR systems using catalysts which minimize SO_3 formation to substantially mitigate any potential adverse impacts of SCR on sulfate emissions.

Figure 2

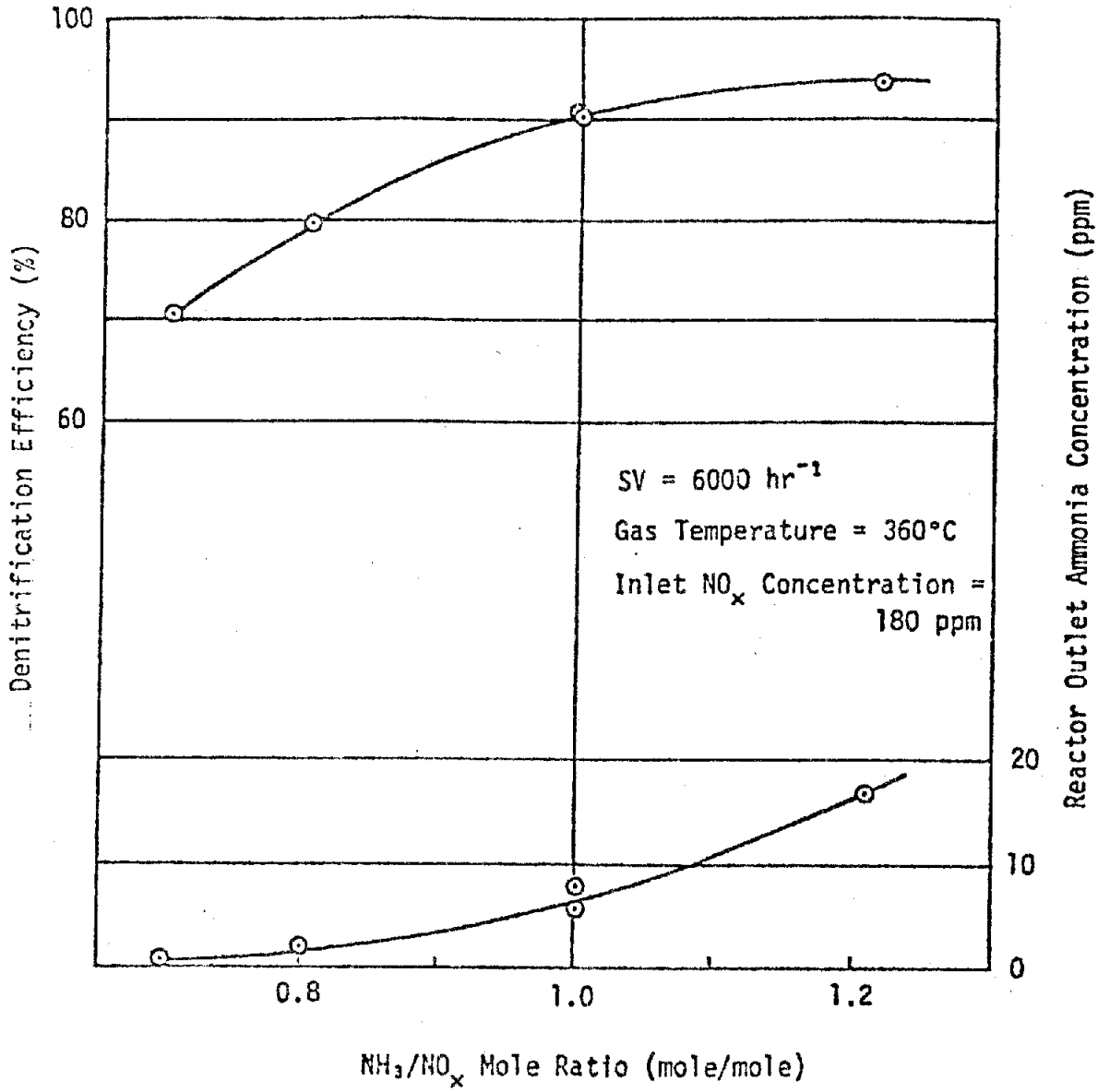

NH_3/NO_x mole ratio versus denitrification efficiency versus reactor outlet ammonia concentration for the honeycomb catalyst at Taketoyo Power Station.

Source: Reference 1.

Comment 6: LADWP has expressed concerns that the use of enough ammonia to effect a 90 percent NOx emission removal could result in the formation of ammonium sulfate ($(NH_4)_2SO_4$) and ammonium bisulfate (NH_4HSO_4) deposits which could foul the air preheater. Furthermore, LADWP believes that aerosols of these compounds could cause environmental problems, and their presence in the stack plume may cause opacity problems due to the presence of condensed particles.

Response: The formation of ammonium sulfate and ammonium bisulfate depends upon the concentrations of NH_3 and SO_3 in flue gas and also on the temperature of the flue gas. Ammonium bisulfate is formed as a result of the reaction between NH_3, SO_3, and water vapor as described in the following reaction:

$$NH_3 \text{ (gas)} + SO_3 \text{ (gas)} + H_2O \text{ (gas)} \longrightarrow NH_4HSO_4 \text{ (liquid)}$$

In the presence of excess ammonia, ammonium bisulfate may further react to form ammonium sulfate (solid) as follows:

$$NH_4HSO_4 \text{ (liquid)} + NH_3 \text{ (gas)} \longrightarrow (NH_4)_2SO_4 \text{ (solid)}$$

The conditions under which these compounds will be formed are shown in Figure 3.

As can be seen in Figure 3, actions which reduce both NH_3 carryover concentrations and SO_3 concentrations (as discussed in the responses to comments 4 and 5) will also result in lower temperatures of formation of ammonia-sulfur compounds, and thus would be expected to reduce the formation of such compounds. As discussed above, these actions, both individually and collectively, are expected to reduce potential operating and maintenance costs to the utilities. Therefore, minimization of NH_3 carryover concentrations and SO_3 concentrations are available mitigation actions which are expected to be fully implemented by the utilities and are in the economic interests of the utilities.

With regard to potential opacity problems, of the more than seventy commercial installations operating with SCR in Japan (7), the Board is unaware of any data noting opacity problems on any of these units. Furthermore, opacity (the darkness and visibility of stack emissions) is regulated by state law (Health and Safety Code Section 41701) and local air pollution control district regulations, and any adverse impacts will have to be mitigated by the utilities pursuant to these requirements.

Comment 7: LADWP has expressed concerns that ammonium sulfates formed as a result of the SCR process may produce deposits on the air preheater and force more frequent washings than would otherwise occur. An air preheater wash will create a large volume of waste water for disposal. LADWP estimates that depending upon the washing period, the additional waste water may range from 300,000 to 1,000,000 gallons and is concerned about the potential adverse environmental impact of disposal of such waste water. (LADWP did not specify whether the additional waste water use was projected on an annual basis or for some other time period.)

Figure 3

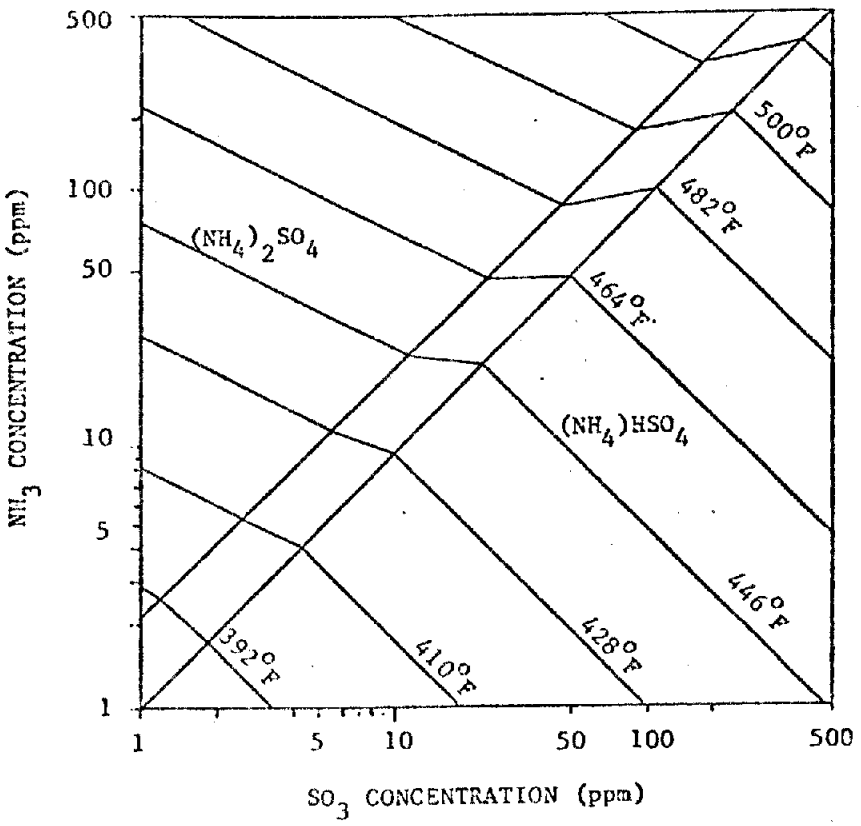

FORMATION OF AMMONIUM SULFATE
HIGH TEMPERATURE RANGE

Source: D.R. Swann, G.D. Drissel. Feasibility of Retrofitting Catalytic Post Combustion NOx Controls on an 80 MW Coal-Fired Utility Boiler. February 1980 (8)

Response: The LADWP estimate apparently applies to an annual generation rate for waste water under the assumption that 11 of its units, comprising 2593 MW, would be required to install SCR units designed for 90 percent NOx removal. The final version of Rules 1135.1 and 59.1 requires that only 3 units of LADWP, comprising 912 MW, would be required to be retrofit with SCR designed for 80 percent NOx removal. Consequently, the actual quantities of additional waste water generated due to the adopted rules will be significantly less than that estimated by LADWP. Furthermore, as explained above, the potential for formation of ammonium compounds can be minimized by techniques which are in the economic interest of utilities and which minimize NH_3 breakthrough emissions as well as the conversion of SO_2 to SO_3.

In addition, because air preheaters are periodically washed at the present time (without SCR installed), any additional waste water generated would be treated and disposed of in a manner similar to that currently used, and in accordance with requirements imposed by the State and Regional Water Quality Control Boards. Accordingly, any potential adverse environmental effects due to additional waste water disposal would thus be mitigated in accordance with regulations of those agencies having jurisdiction over water quality.

Comment 8: SCE expressed concerns regarding potential hazards of ammonia storage, handling, and transport and the possibility of accidental releases of ammonia. LADWP also expressed concerns regarding storage of ammonia.

Response: In order to evaluate the potential hazards of ammonia storage, handling and transportation, the ammonia-related hazardous materials incidents have been compared to all the hazardous materials incidents[4] in the U.S. in 1978. In addition, the amount of NH_3 required as a result of Rules 1135.1 and 59.1 is small compared with national statistics for ammonia shipments.

Table 1 compares ammonia related incidents with all hazardous materials incidents in the U.S. in 1978. As shown in this table, shipment of about 9 million tons of ammonia in 1978 resulted in spillage of about 188 tons (0.002%) in 95 incidents. These incidents resulted in 2 deaths, 58 injuries, and $98,000 in damages. By comparison, all hazardous materials incidents, totalling 17,750 in 1978 resulted in 46 deaths, 1072 injuries, and $16 million in damage. Table 1 also compares ammonia requirements of Rules 1135.1 and 59.1 with national average shipments and data on incidents. These data suggest a relatively low probability of incidents with relatively very low or negligible expected impacts.

Table 2 shows that the mean mortality index for ammonia is 0.02 as compared to the mean mortality index of hydrocarbons which ranges from 0.1-0.6. These data indicate that ammonia, which is commonly used in many household, commercial and industrial cleaning applications and which is used in agriculture in significant

---

4. A hazardous materials incident is defined in 49 CFR 171.15 (1977) according to criteria established by the U.S. Department of Transportation. Basically, these criteria include: accidental deaths or injuries, property damage in excess of $50,000, or other specified damages.

TABLE 1

ANHYDROUS AMMONIA STATISTICS

Total amounts of shipments of anhydrous ammonia in the U.S. in 1978		8.7 million tons
Total amount spilled of those shipments in the U.S. in 1978		188 tons
Statistics of the 17,750 incidents* in 1978 in the U.S.	Deaths Injuries Damages	46 1072 $16 million
Statistics of the 95 incidents involving anhydrous ammonia in 1978 in the U.S.	Deaths Injuries Damages	2 58 $98,000
Total amount of anhydrous ammonia used by agriculture in the U.S. in 1978		4.5 million tons
Total amount of anhydrous ammonia required to comply with the Rules		15,000 tons per year

*An incident is as defined in 49 CFR 171.15 (1977).

Source: U.S. Department of Transportation, National Fertilizer Association and ARB/SSCD

TABLE 2

ESTIMATE OF MEAN MORTALITY INDEX OF AMMONIA
AND ITS COMPARISON WITH OTHER GASES

LOCATION	DATE	AREA/SITE	SOURCE OF LEAKAGE	QUANTITY METRIC TON	NUMBER OF FATALITIES
Floral, Ark.	June 5, 1971	Rural	Pipeline	600 tons	0
Enid, Oklahoma	May 7, 1976	Urban	Pipeline	500	0
Conway, Kansas	December 6, 1973	Rural	Pipeline	277	0
Landskrona, Sweden	January 16, 1976	Port	Ship-storage connection	180	2
Blair, Nebraska	November 15, 1970	Rural	Storage tank	160	0
Crete, Nebraska	February 18, 1969	Urban	Rail tanker	90	9
Belle, West Va.	January 21, 1970	Urban	Rail tanker	75	0
Texas, Tx City	September 13, 1975	Urban	Pipeline	50	0
Potschefstroom, South Africa	July 13, 1973	Urban	Storage tank	38	18+
Houston, Texas	November 15, 1976	Urban	Road tanker	19	6
Lievin, France	August 21, 1968	Urban	Road tanker	19	6

Mean mortality index = $\frac{\text{total number fatalities}}{\text{total amount lost}}$

$= \frac{41}{2008}$

$= 0.02$

+Without this incident the mean mortality index = 0.01

Mean mortality index of chlorine = 0.3
" " " of flammable gases or vapor = 0.1 -0.6
" " " of Ammonium Nitrate = 0.1

Source: A report on Major Hazards by Advisors Committee, Health and Safety Commission, Great Britain, 1979.

quantities, is not particularly dangerous when handled with proper caution. Accordingly, mitigation measures expected to be taken by utilities to ensure minimization of potential hazards due to ammonia spillage, which would consist of implementation of standard safe operating practices for potentially hazardous materials, are expected to reduce potential hazards to very low or negligible levels.

Comment 9: LADWP, in its written testimony, expressed concerns regarding formation of hydrogen cyanide (HCN) by ammonia injection.

Response: Brown and Sawyer were not able to detect either HCN or other nitrogenous species (other than NOx, NH_3, or N_2) in the stack gas from a laboratory combustor burning No. 1 diesel doped with pyridine. (Quarterly Progress Report for ARB Contract A8-146-31 for 1 May - 1 July 1980). Based upon minimum detection limits associated with the various analytical procedures used, Brown and Sawyer estimated conservative upper limit concentration values of 5 ppm for all nitrogenous species (other than NOx, NH_3, and N_2) and 1 ppm for HCN in the laboratory combustor stack gas.

These data, taken along with SCE's and ARB's tracer studies, which show that emissions from tall stacks are diluted by a factor of 10^{-4} to 10^{-6} (7), show that the maximum surface level concentration of all nitrogenous species (other than NOx, NH_3, and N_2) is in the range of 5 to 500 parts per trillion and 1 to 100 parts per trillion for HCN, and may be substantially less.

A threshold limit value (TLV) of 10 parts per million has been designated for hydrogen cyanide (HCN), according to Multimedia Environmental Goals for Environmental Assessment, Volume II, MEG Charts and Background Information, J.G. Cleland and G.L. Kingsbury, November, 1977; EPA-600/7-77-136b. The ambient level goal recommended in that same work is 24 parts per billion, based on health effects. Documentation of the Threshold Limit Values for Substances in Workplace Air, (American Conference of Governmental Industrial Hygienists, Third Edition 1971), shows that the TLV of 10 parts per million "contains a two-fold margin of safety against mild symptoms of HCN response."

Thus, according to the test data, the highest ambient concentration expected would be a factor of more than 200 below EPA recommended environmental goals for the atmosphere.

Comment 10: SCE expressed concern that the Board's action would exacerbate ozone and oxidant air quality problems in the South Coast Air Basin.

Response: This concern is dealt with at length in the Board's Findings and Basis for decision, which is incorporated by reference herein.

CERTIFIED: Sally Rump
Sally Rump
Board Secretary

Date: Dec 23, 1980

References

1. Dr. Jumpei Ando, NOx Abatement for Stationary Sources in Japan, rpt. (Japan: Chou University, August 1979).

2. Proceedings of the Joint Symposium on Stationary Combustion NOx Control, Volume II, Utility Boiler NOx Control by Flue Gas Treatment, "Assessment of NOx Flue Gas Treatment Technology" by J. D. Moholey, U.S. EPA, IERL-RTP-1084, October 1980.

3. Sengoku Tadamasa, et al, The Development of a Catalytic NOx Reduction System For Coal-Fired Steam Generators (Tokyo, Japan; Mitsubishi Heavy Industries, October 6-9, 1980).

4. Proceedings of the Joint Symposium on Stationary Combustion NOx Control, Volume II, Utility Boiler NOx Control by Flue Gas Treatment, "Status of SCR Retrofit at Southern California Edison Huntington Beach Generating Station Unit 2", L. Johnson et al; U.S. EPA IERL-RTP-1084 October 1980.

5. Solid Waste Management in California: A Status Report, State of California, Solid Waste Management Board, February 1980.

6. A document from SCE titled "Emission of Vanadium and Organics from SCE Oil-Fired Generating Stations," November 24, 1980.

7. The Air Resources Board staff report entitled "Public Hearing to Reconsider Rule 1135.1 of the South Coast Air Quality Management District and Rule 59.1 of the Ventura County Air Pollution Control District Controlling Emissions of Oxides of Nitrogen from Power Plants." (September 1980)

8. D. R. Swann, G. D. Drissel. Feasibility of Retrofitting Catalytic Post Combustion NOx Controls on an 80 MW Coal-Fired Utility Boiler, rpt. (Denver, Colorado: Stearns-Roger Inc., February 1980).

9. State of California Air Resources Board Final Report of the Ad Hoc Panel on Atmospheric Carcinogens, April 1979.

10. Science Applications, Inc., Vol. I., Final Report, An Inventory of Carcinogenic Substances Released Into the Ambient Air of California, February 1979.

There are five basic alternatives which the Board could adopt in reconsidering SCAQMD Rule 1135.1 and VCAPCD Rule 59.1. Following are descriptions and discussions of these alternatives.

Alternative 1: Take no action; that is, the "no project" alternative. This alternative would, in effect, reaffirm the versions of SCAQMD Rule 1135.1 and VCAPCD Rule 59.1, currently stayed, both of which the Board adopted on March 27, 1980. This alternative would neither prevent nor mitigate the environmental and other concerns raised by the petitioner, SCE, and LADWP, the intervenor. It is with regard to the existing versions of these two rules that the environmental questions have been raised.

Alternative 2: Rescind SCAQMD Rule 1135.1 and VCAPCD 59.1. Under this alternative, further NOx emission reductions would not be required, and power plants would continue to be subject to the control prescribed by SCAQMD Rule 464 (125-225 ppm for gas-fired units and 225-325 ppm for oil-fired units) and by a comparable VCAPCD rule. Although this alternative would eliminate the concerns raised by SCE and LADWP, it would forego emission reductions of almost 60 tons per day of NOx by 1990. Currently, NOx emissions from stationary sources in the South Coast Air Shed are slightly over 450 tons per day. The nonattainment area plans for the South Coast Air Basin and the Ventura County Air Pollution Control District rely on these emission reductions to attain and maintain the national ambient air quality standards for nitrogen dioxide and suspended particulate matter and, in the case of Ventura, for ozone as well. Also, such reductions in the emissions of NOx are necessary if the state ambient air quality standards for nitrogen dioxide, suspended particulate matter, and visibility are to be attained and maintained. If those standards are not attained and maintained, the adverse effects on the public health and welfare that the standards are intended to prevent will not be prevented.

Because the federal Clean Air Act and the California Health and Safety Code require that the ambient air quality standards be attained and maintained in order to protect public health and welfare, withdrawal of Rules 1135.1 and 59.1 would require that new measures be adopted to effect equivalent reductions from other sources. That is, NOx control measures would have to be adopted for sources for which control methods have not yet been identified, or for which controls cost more for each pound of NOx reduction than those required by Rules 1135.1 and 59.1. Since all of the significant adverse environmental effects expected to result from the proposal can be mitigated, the benefit of achieving the 60 tons per day NOx emission reductions by controlling power plants is preferable to controlling other sources at this time because control of other sources may be accompanied by unknown environmental impacts.

If other, more costly or unidentified rules were not quickly adopted, this alternative would be inconsistent with state and federal laws, and would result in pollutant concentrations in the South Coast Air Shed which would be detrimental to the public health and welfare. This alternative is therefore infeasible, with significant adverse impacts on the environment.

Alternative 3: Amend Rules 1135.1 and 59.1 to be less stringent. Concerns raised by SCE and LADWP (such as increased environmental burdens of heavy metals from catalysts and emissions of ammonia) could be partially mitigated by making the existing rules less stringent. Although this alternative would still provide some cost-effective reductions in emissions of NOx, these emission reductions

would be less than the reductions that would result from the current rules. Therefore, the same problems discussed under Alternative 2 would apply, albeit to a lesser degree, to this alternative. Overall, the air quality benefit expected by implementation of the rules would be lost while the adverse impacts of the rules would not be commensurably reduced. This is especially true since all such impacts can be mitigated without loss of environmental benefits, or have been found not to be a problem.

Alternative 4: Rescind Rules 1135.1 and 59.1 and restore the South Coast Air Quality Management District's original Rule 475.1. This rule required a 90 percent reduction in emissions from every unit, a far more costly alternative since the utilities would not have the flexibility of selecting units to be controlled. This alternative would undoubtedly be unacceptable to SCE and LADWP because they petitioned the Board to set this rule aside in 1978. After hearing testimony on the rule, the Board found the rule to be inconsistent with Division 26 of the Health and Safety Code for several reasons and amended the rule on August 7, 1978. The Board found at that time that the rule imposed an unreasonable financial and engineering burden on the affected utilities and did not require best available technological and administrative practices. Nothing has changed in the interim to affect these findings; as a result, adoption of this alternative would result in a rule which would be in conflict with the Health and Safety Code. Furthermore, this alternative would exacerbate the environmental concerns raised by the two utilities. While from an air quality point of view this rule would achieve greater NOx reductions than the proposal, economic impacts of this alternative would render its application infeasible.

It also should be noted that the Ventura County Air Pollution Control District did not adopt a rule to control NOx emissions from power plants similar to Rule 475.1 adopted by the SCAQMD. Therefore, for consistency, the Board would have to consider adopting a similar rule for the VCAPCD.

Alternative 5: Amend Rules 1135.1 and 59.1 as proposed.

CONCLUSION

The Board finds that Alternative 5 is the most desirable of the alternatives listed.

Alternative 5 offers the potential of reducing emissions of NOx in the South Coast Air Shed by an amount nearly equivalent to the reductions that would result from the current versions of Rules 1135.1 and 59.1, while effectively lessening the significant environmental concerns raised by SCE and LADWP. This conclusion is based on the following:

1. The requirements of the amended Rules are clear, easily understood, and not subject to uncertainty.

2. The amended Rules require the utilities to install controls only on units that are certain to be in use as base-load units through 1990, and units which will have high capacity factors under any realistic oil and gas reduction scenario likely to occur.

3. The emission reductions resulting from implementing the amended Rules are needed to attain and maintain the state and national ambient air quality standards for nitrogen dioxide and total suspended particulate matter in the South Coast Air Basin, and for nitrogen dioxide, total suspended particulate matter, and ozone in the Ventura County Air Pollution Control District. These reductions are also needed to attain and maintain the state visibility standard.

4. Compliance with the amended rules can be achieved through installation of SCR on a limited number of units.

In addition, weakening of the rules would only partially mitigate the environmental concerns raised, while creating new, more serious concerns (e.g., increases in NOx emissions or NH_3). Most of the environmental concerns raised have been determined not to pose significant problems. Further, all legitimate concerns can be mitigated. The mitigation measures identified are either within the jurisdiction of other agencies, which are currently regulating the subject utilities, or are within the direct control of the utilities that raised the concerns. Further, the utilities have an economic interest in assuring that the measures are carried out. Finally, for the reasons identified in items 1 through 4 above, Alternative 5 will result in fewer potential adverse environmental impacts compared to Alternative 1, the no action alternative.

State of California

Memorandum

To : Huey D. Johnson
Secretary

Date : December 23, 1980

Subject: Filing of Notice of Decision of the Air Resources Board

From : Air Resources Board

Pursuant to Title 17, Section 60007(b), and in compliance with Air Resources Board certification under section 21080.5 of the Public Resources Code, the Air Resources Board hereby forwards for posting the attached notice of decision and response to environmental comments raised during the comment period.

Sally Rump

Sally Rump
BOARD SECRETARY

attach: Resolution 80-68

RECEIVED BY
Office of the Secretary

DEC 23 1980

Resources Agency of California

RECEIVED BY
Office of the Secretary
DEC 23 1980
Resources Agency of California

State of California
AIR RESOURCES BOARD

Resolution 80-69

December 18, 1980

WHEREAS, Health and Safety Code Section 39003 provides that the Air Resources Board (the "Board") is the state agency charged with coordinating efforts to attain and maintain ambient air quality standards;

WHEREAS, Health and Safety Code Section 39002 provides that local and regional authorities have the primary responsibility for control of air pollution from all sources other than vehicular sources, and provides further that the Board shall undertake control activities in any area wherein it determines that the local or regional authority has failed to meet the responsibilities given to it by Division 26 of the Health and Safety Code or any other provision of law;

WHEREAS, Health and Safety Code Section 39500 provides that it is the intent of the Legislature that the Board shall coordinate, encourage and review the efforts of all levels of government as they affect air quality;

WHEREAS, Health and Safety Code Section 39600 provides that the Board shall do such acts as may be necessary for the proper execution of the powers and duties granted to, and imposed upon, the Board by Division 26 of the Health and Safety Code and by any other provision of law;

WHEREAS, Health and Safety Code Section 39602 designates the Board as the air pollution control agency for all purposes set forth in federal law; and provides further that the Board is responsible for preparation of the state implementation plan required by the Clean Air Act, and to this end shall coordinate the activities of all districts necessary to comply with that Act;

WHEREAS, Health and Safety Code Section 39605 provides that the Board may provide any assistance to any district;

WHEREAS, Health and Safety Code Section 40001 provides that the local districts shall adopt and enforce rules and regulations which assure that reasonable provision is made to achieve and maintain the state ambient air quality standards and shall also endeavor to achieve and maintain the federal ambient air quality standards;

WHEREAS, Section 107(a) of the Clean Air Act provides that it is the responsibility of each state to assure air quality within the entire geographic area of the state;

WHEREAS, Section 110(a)(1) of the Clean Air Act requires that each state adopt a plan which provides for the implementation, maintenance, and enforcement of national primary ambient air quality standards within each air quality control region of the state;