Tri-Fuel Hybrid
A Plug-In HEV Demonstration Project

California Air Resources Board

January 27, 2004

Presented by Tom Gage
AC Propulsion, Inc.
www.acpropulsion.com

AC PROPULSION

Tri-Fuel Hybrid Vehicle Project

- Vehicle objectives
  - Plug-in capability - car runs on energy from grid or on gasoline
  - Unconstrained long-distance driving
  - Clean distributed generation while parked
- Tri-fuel operation
  - Electricity from grid for local driving
  - Gasoline for longer trips
  - Low-pressure natural gas for power generation while parked (no gas storage on vehicle)
- Project funded at $755,000, December 2001
  - CARB $230,000
  - SCAQMD 180,000
  - NREL 40,000
  - Volkswagen 225,000 in-kind
  - AC Propulsion 80,000 in-kind

AC PROPULSION

Automakers promote plugless hybrids

- "Remember, Prius never needs to be plugged in."

  – 2004 Toyota Prius Product Reference Guide

- "The Civic Hybrid's gas-electric powertrain works seamlessly and automatically as you drive.

  So you never plug it in. (emphasis in original)

  – 2004 Honda Car & Truck product brochure

- "Do I have to plug it in?"

  "No. Not once. Not Ever. Plug-in vehicles are strictly electric, not hybrids."

  – Lexus brochure for 2005 RX 400h

AC PROPULSION

Plug-in Hybrid vs Plugless 2004 Prius

Engine	1.4 liter	1.5 liter
	35 kW	56 kW
Generator	30 kW	20 kW (est)
Traction Motor	110 kW	50 kW
Transmission	Fixed ratio	Planetary
Battery	PbA	NiMH
	8 kWh	2 kWh
	650 lb	100 lb (est)
Charger	20 kW (V2G)	none
Charge port	conductive	none

AC PROPULSION

Series-Hybrid Configuration

Full-function EV with APU range extender

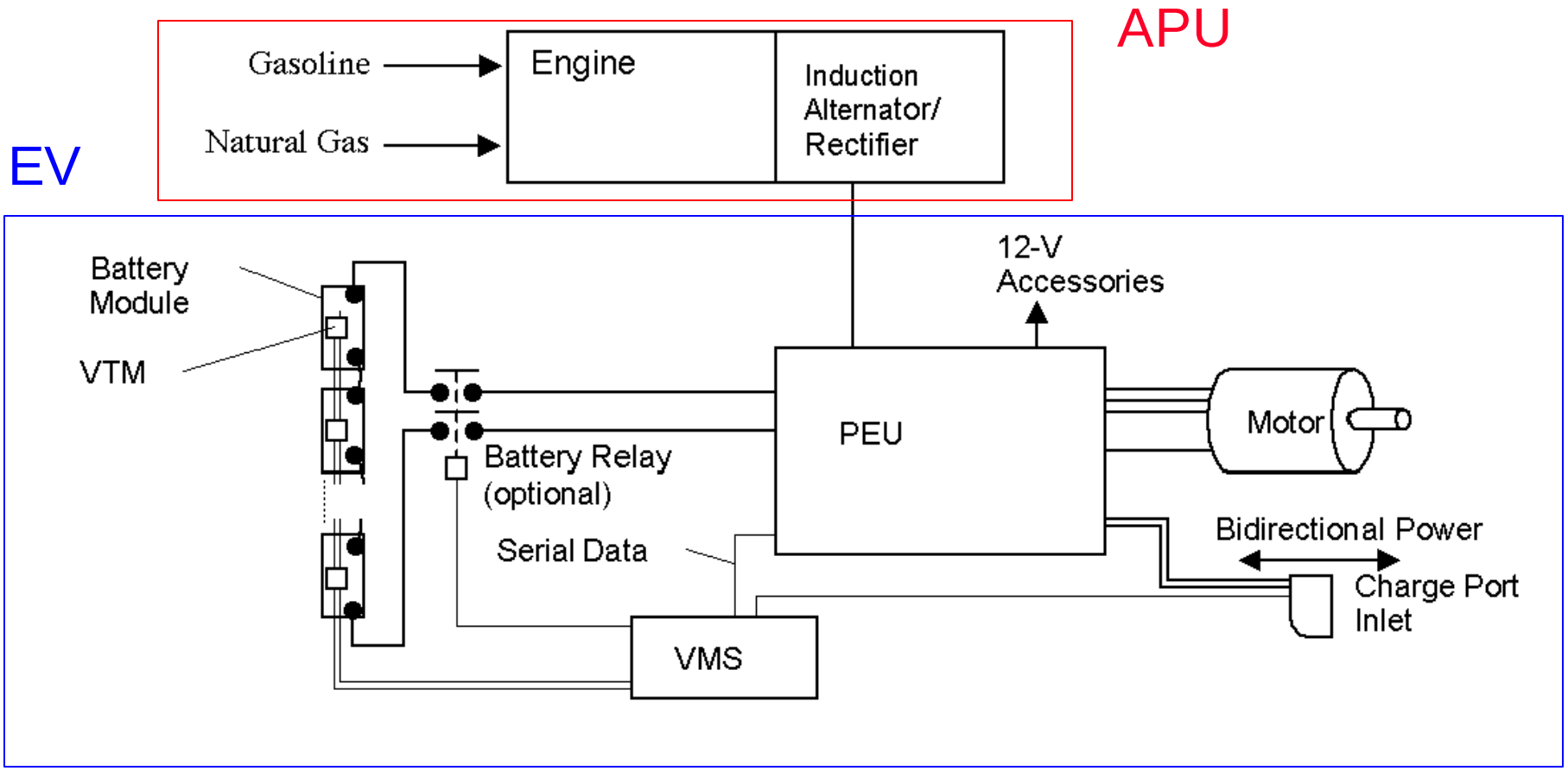

AC PROPULSION

Vehicle Packaging Layout

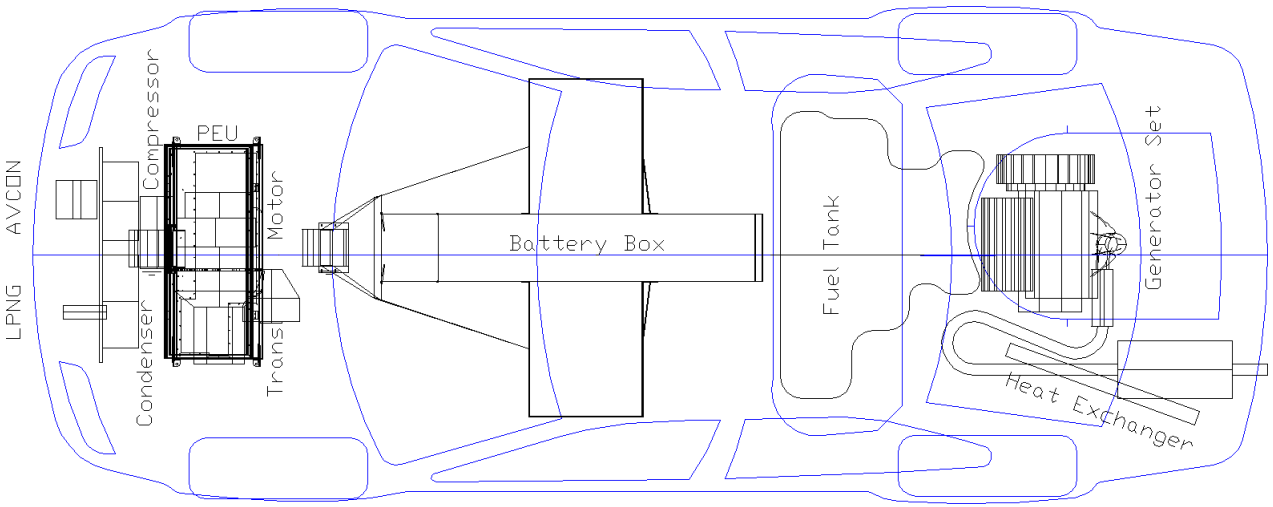

Auxiliary power unit with 1.4L engine and inverter controlled alternator

110 kW drive system with bi-directional AC power interface

8 kWh lead-acid hybrid battery

35 kW on gasoline for driving

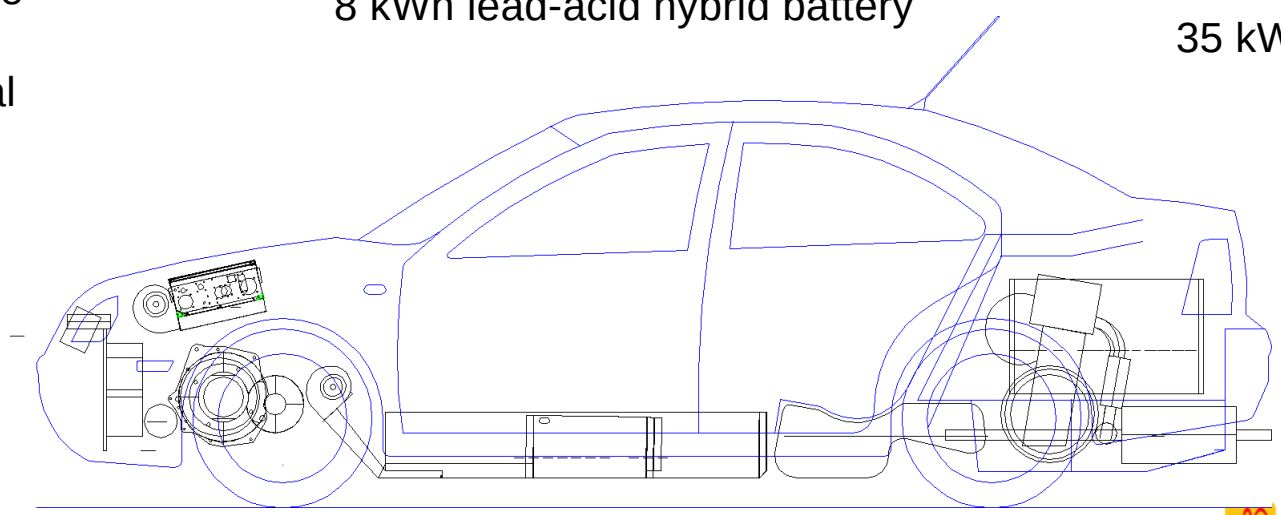

15 kW on natural gas for stationary generation

AC PROPULSION

EV Conversion and Upgrade

- Installation of 110 kW electric drivetrain
- Replace Gen 1 power electronics with Gen 2

AC PROPULSION

Battery Pack

- Panasonic HV1225, 25Ah
- Pack weight: 310 kg
- Capacity: 8.7 kWh (rated)

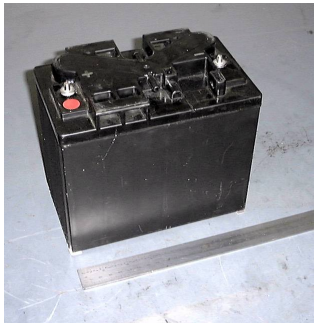

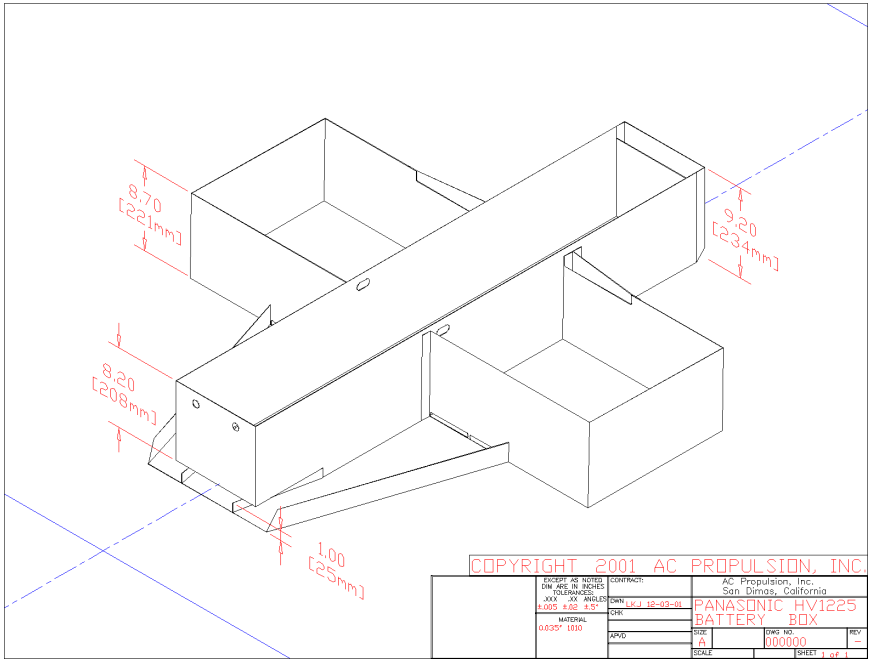

AC PROPULSION

Engine

- Volkswagen Lupo
  (European market)
- 1.4 liter gasoline
  55 kW peak power rating
- Operation mapped for peak engine efficiency
  - Silent start using alternator
  - 0 - 35 kW electrical output
  - 1000 - 3500 rpm operating speed
- Fuel Systems:
  - Electronic gasoline injection for driving
  - Low pressure natural gas for power generation

AC PROPULSION

Alternator Design

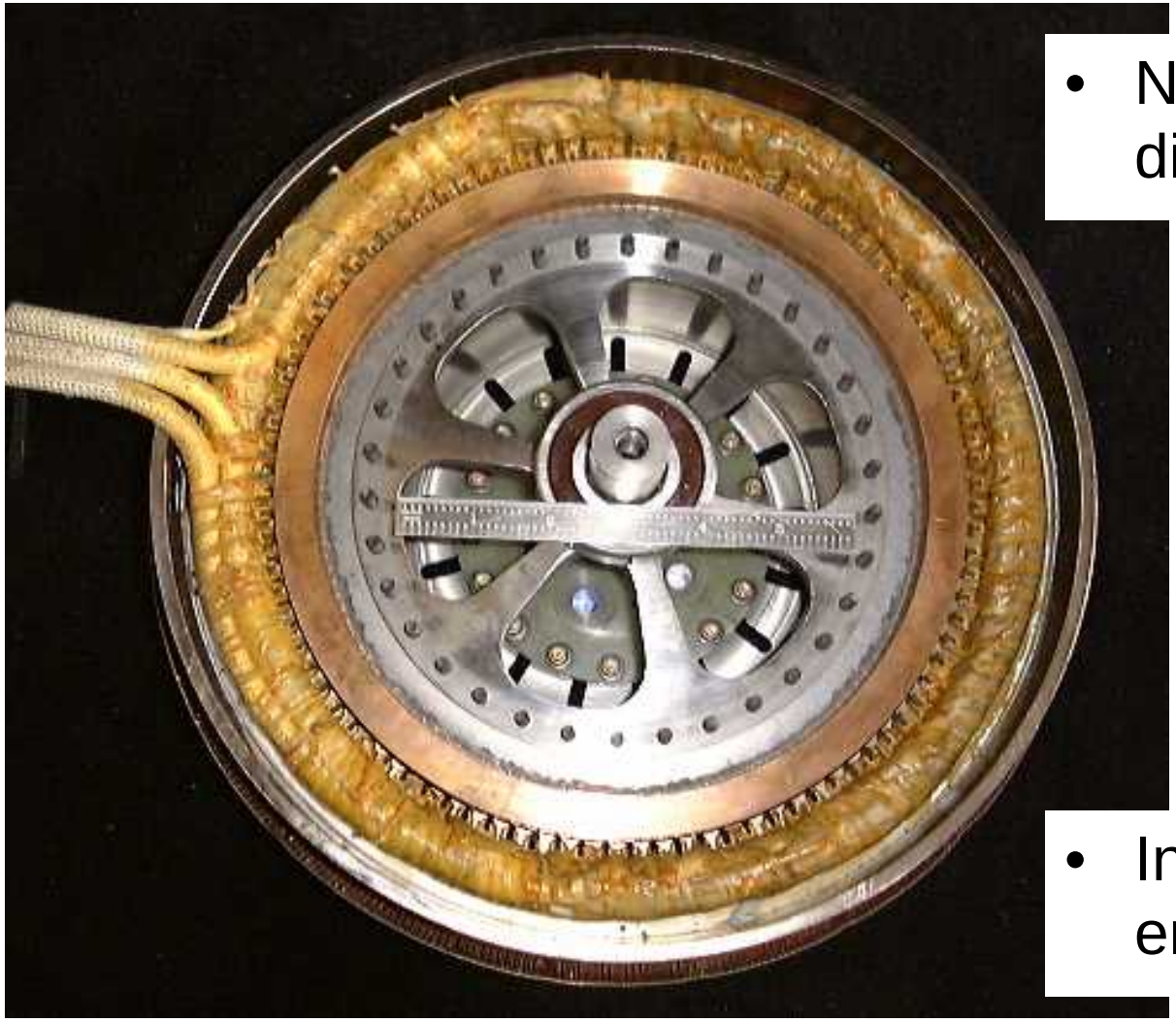

- New design with 8” diameter rotor
- Mounts directly to engine crankshaft
- Inverter control allows engine stop/start

AC PROPULSION

Alternator Development

- Calibration for performance and efficiency
- Inverter control allows engine stop/start
- Axial-flow air cooling

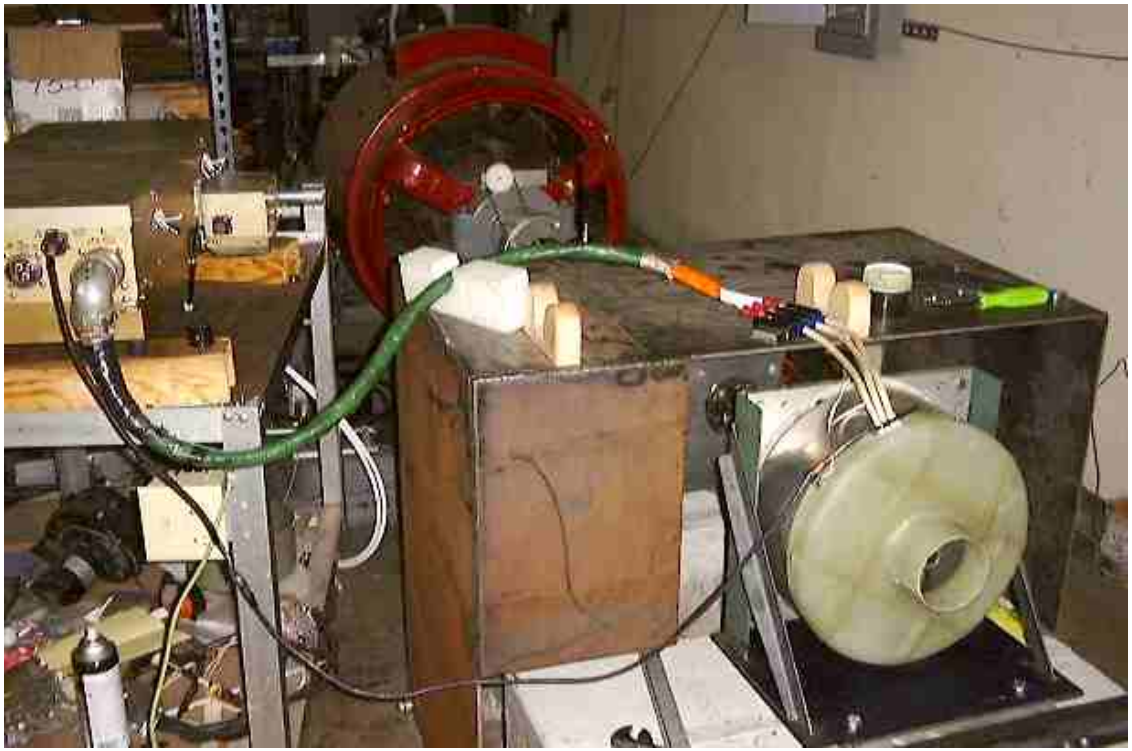

AC PROPULSION

APU Development

- Stand-alone, self-contained unit
- Adaptable to other engines, power levels, applications

AC PROPULSION

APU Installation

- Rear-mounted APU
- Packaging, cooling, NVH

AC PROPULSION

Vehicle Testing

- Efficiency
- Range
- Emissions

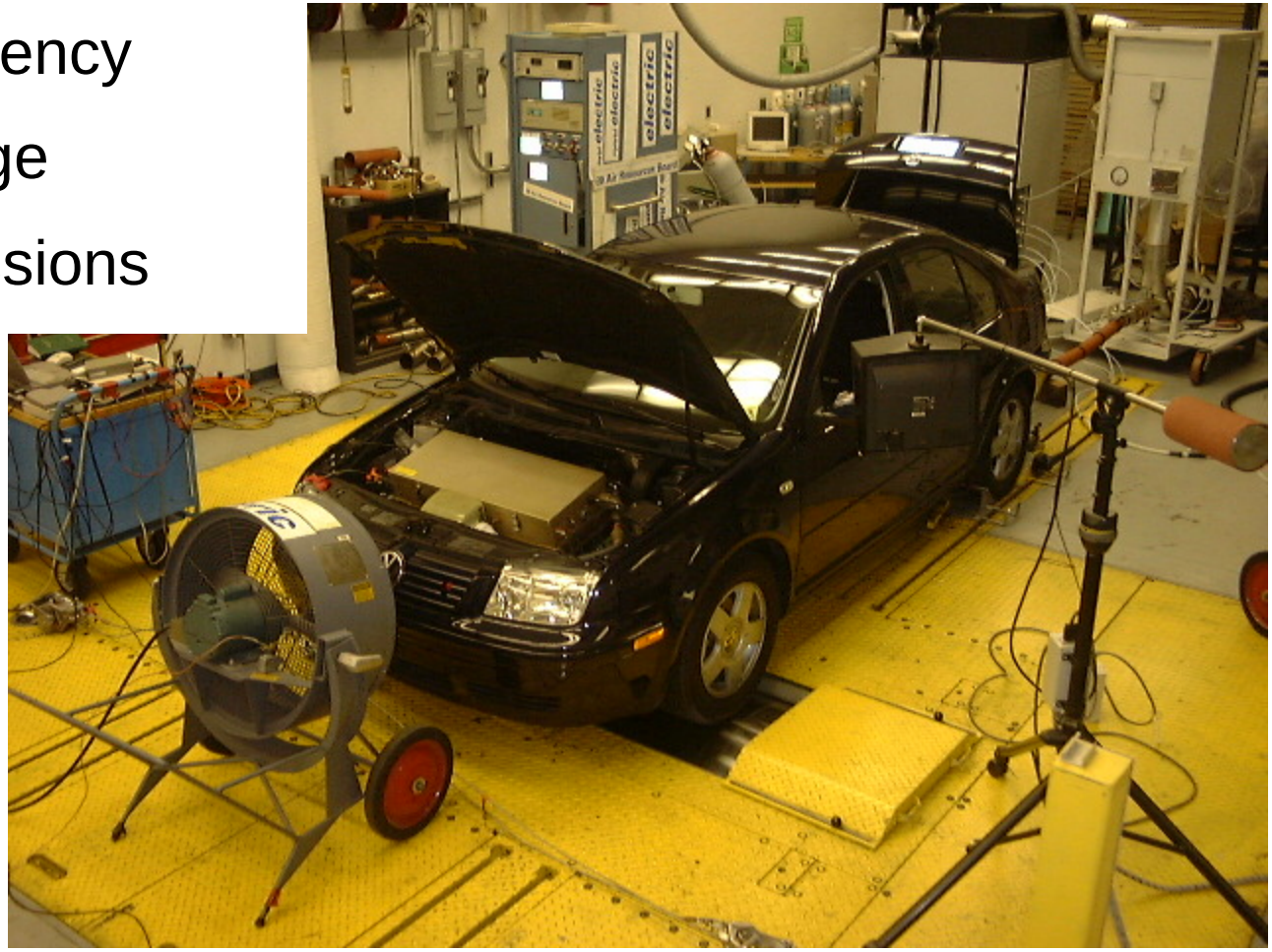

AC PROPULSION

Vehicle Testing - Results

CARB - El Monte, April-May, 2003

EV RANGE		miles	Wh/mi	avg speed
	Urban Range	39.3	212	18.9
	Highway Range	38.0	195	44.0

EMISSIONS: UDDS		NMHC gm/mi	CO gm/mi	NOx gm/mi
	TFH 3-test avg	**0.074**	**0.218**	**0.078**
	Lupo 2-test avg	0.028	0.182	0.042
ref:	LEV I	0.075	3.400	0.200
	ULEV I Std	0.040	1.700	0.200
	ULEV II Std	0.040	1.700	0.050
	SULEV	0.010	1.000	0.020

Steady State	output (kW)	NMHC (g/kWh)	CO (g/kWh)	NOx (g/kWh)	Eff % fuel to DC
	5	0.011	0.254	0.154	20.5%
	10	0.001	0.441	0.305	23.9%
	15	0.003	0.232	0.048	26.0%
	20	0.000	0.250	0.049	27.2%
	25	0.008	0.987	0.007	27.6%
	30	0.048	4.015	0.022	27.8%

AC PROPULSION

Cold-Start Emissions

- Non-optimized APU start

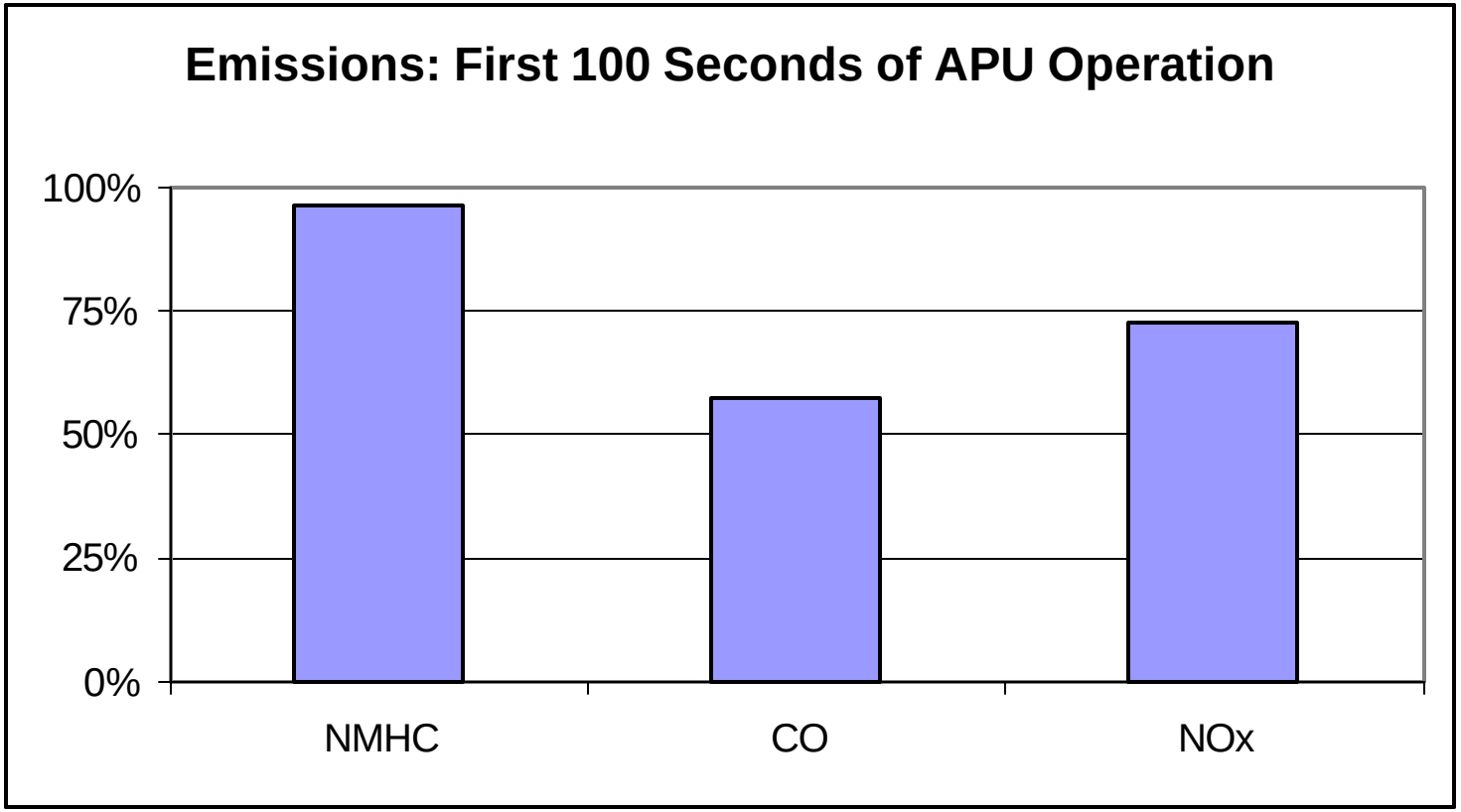

AC PROPULSION

“Cool Start” Emissions

- APU off time affects emissions

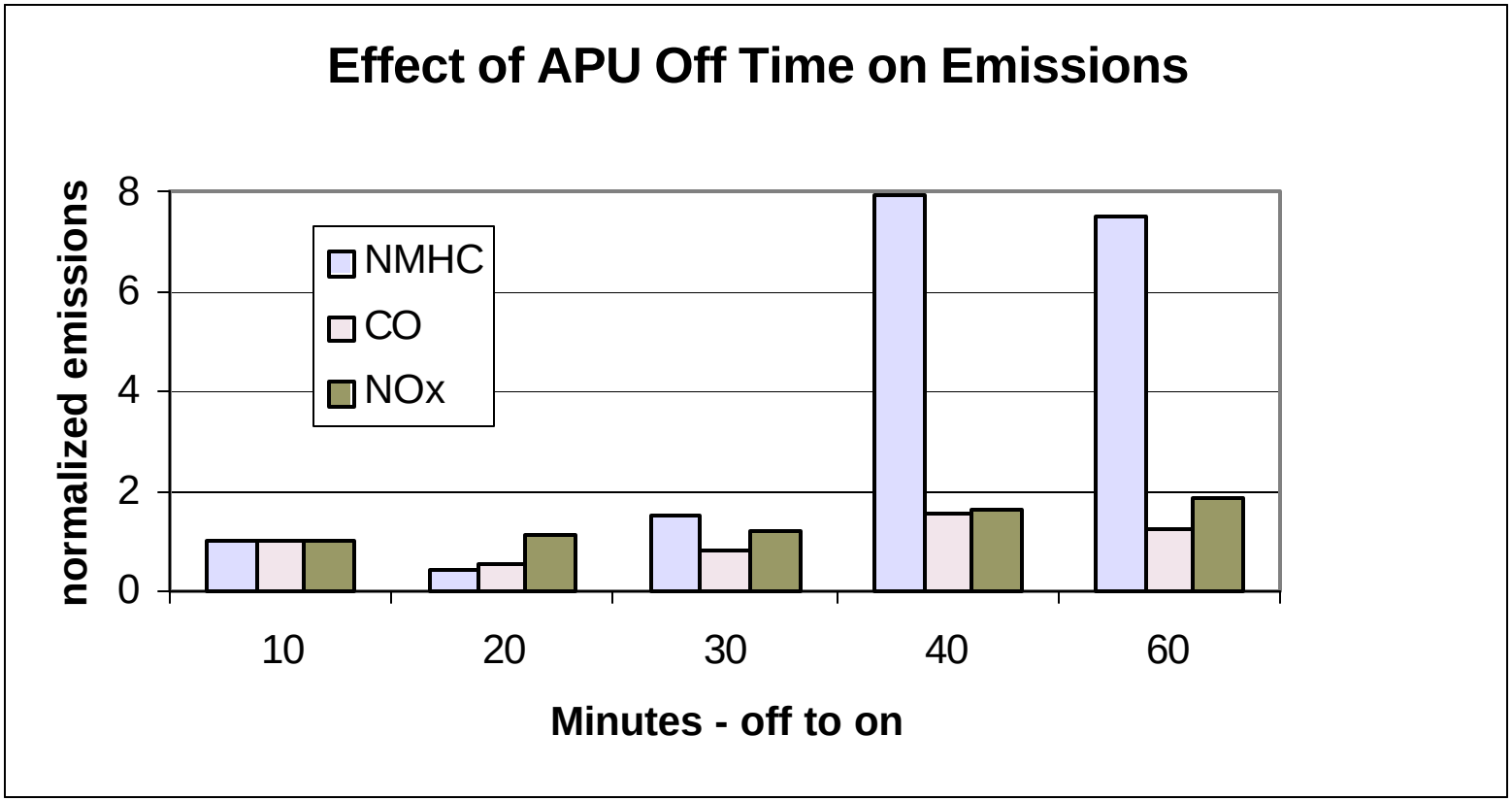

AC PROPULSION

Emission Control Potential

- Engine pre-heating
- Warm-up calibration
- Engine operation de-coupled from driveability

gm/mi	NMHC	CO	NOx
Project Vehicle	0.003	0.083	0.022
Simulation: 1st 100 sec same as warmed up operation			
SULEV standard	0.010	1.000	0.020

AC PROPULSION

On-road

- First drive: round-trip to Sacramento - March 2003
- Total use: 8300 miles as of January 2004

AC PROPULSION

On-road - Operation

Two driving modes

- EV Mode - APU stays off until single-module low-voltage threshold reached ~ 10V
- HEV Mode - APU turns on and operates automatically to recharge/sustain battery at ~60% SOC

Operator Control

- Default to EV Mode with key on
- Mode switch toggles between EV/HEV mode
- Either mode selectable at any time
- Low voltage in EV mode triggers auto HEV mode select
- Manual APU power control in EV mode

AC PROPULSION

On-road - APU Operation

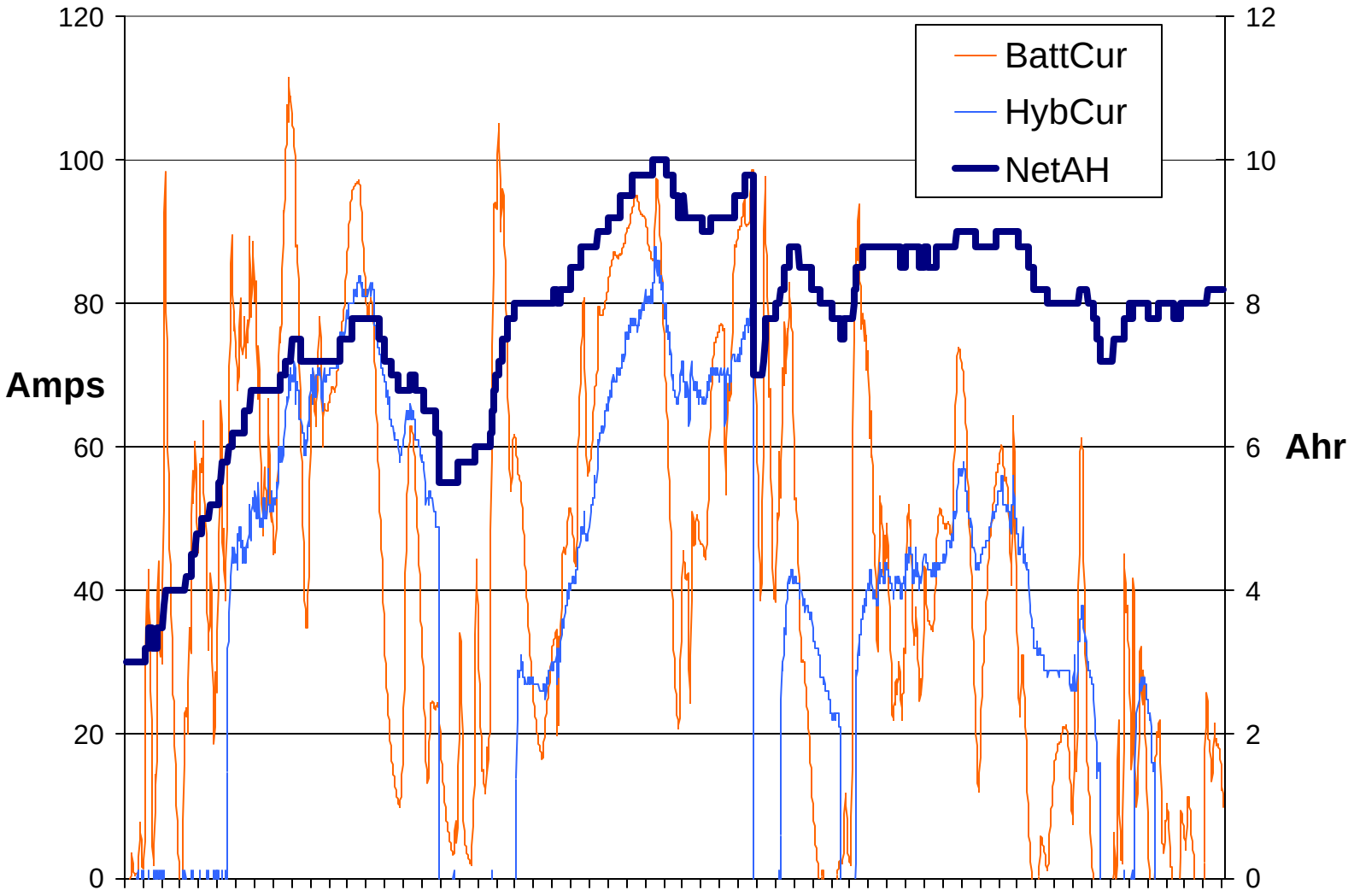

AC PROPULSION

On-road - Results

EV Mode

- Battery capacity: 20 - 24 Ah, ~ 7 - 8 kWh delivered
- Energy consumption: 200 - 250 Wh/mi observed
- Range: 25-35 miles before APU turns on

HEV Mode

- Speed: 80 mph charge sustaining, 87 mph max
- Fuel economy: 32 - 37 mpg highway

AC PROPULSION

Hybrid vs Conventional

	Project Vehicle	VW Jetta 2.0L auto.
0-60 mph acceleration	8.7 secs [1]	12.0 secs [2]
Top Speed	87 mph [3]	>100 mph
City fuel economy	27 mpg [4]	23 mpg [5]
Highway fuel economy	34 mpg [1]	29 mpg [5]
EV range	30 miles	0 miles
Max Range	540 miles	435 miles

1 measured
2 *Consumers Reports* test data
3 Governed by control system
4 CARB test result depreciated 10%
5 EPA label value

AC PROPULSION

On-track

- Michelin Challenge Bibendum - September, 2003

AC PROPULSION

On-track - Results

Results for AC Propulsion Tri-fuel Hybrid Jetta
2003 Michelin Challenge Bibendum

Event	Score	Grade	Grade Points
Award Category			
• Acceleration 0-60 mph	8.95 sec	A (trophy)	4
• Braking 60-0 mph	214.05 ft	B (trophy)	3
• Slalom	10.31 sec	C	2
• Emissions		B (trophy)	3
• Efficiency	30.87 mpg	C	2
• Noise	73.82 dB	C	2
• Local CO2	270.64	D	1
GPA for Award Category			**2.43**
Rank			**16/50**
Information Category			
• Well-to-Wheel CO2 (min)	255 g/mi	D	1
• Well-to-Wheel CO2 (max)	329 g/mi	D	1
• Range	462 miles	B	2
Overall GPA			**2.20**
Rank			**19/50**

AC PROPULSION

On-track - EVS-20 Ride-and-Drive

Comments recorded from attendees who drove the Tri-Fuel Hybrid, Long Beach, November 2003

- “I like this one, you have full accel ansd decel on one pedal”
- “very good acceleration, quite good, actually better than my Passat”
- “I do like the strong regen(erative braking). I didn’t think I would. You really have much more control”
- “really amazing power, no shifting”
- “wow, wow, wow-wow-wow, it really goes. I’m amazed, wow, like a race car, unbelievable”
- “It’s definitely the strongest EV I’ve ever driven”
- “it just drives beautifully”

AC PROPULSION

Stationary Generation

- Four modes demonstrated
  - Natural gas or gasoline
  - Grid-tied or stand-alone

AC PROPULSION

Stationary Generation Applications

- Distributed generation and ancillary services
- CARB-sponsored studies available:
  - Vehicle-to-Grid Power: Battery, Hybrid, and Fuel Cell Vehicles as Resources for Distributed Electric Power in California, W. Kempton et al, June 2001, contract # ARB00-612
  - Vehicle-to-Grid Demonstration Project: Grid Regulation Ancillary Service, with a Battery Electric Vehicle, A. Brooks et al, October 2002, contract # ARB01-313
- Back-up power for home and recreation
- Worksite power for commercial fleets

AC PROPULSION

Stationary Generation - Emissions

- Automotive systems achieve low emissions
- Potential to meet future DG standards

		Fuel gal/kWh	Eff	NMHC	CO gm/kWh	NOx
TFH APU 5 kW (gasoline)		0.148	20.5%	0.011	0.254	0.154
TFH APU 15 kW (gasoline)		0.116	26.0%	0.003	0.232	0.048
Capstone 30 kW [1]		NA	NA	0.078	0.603	0.223
US Generation Avg[2]		NA	NA	NA	NA	2.540
CA Generation Avg [3]		NA	NA	NA	NA	0.200
CARB DG Standard[4]	2003	NA	NA	0.450	2.700	0.230
CARB DG Standard[4]	2007	NA	NA	0.009	0.045	0.030

[1] natural gas, max output, source: Capstone White Paper March 6, 2000
[2] fossil fuel only, source: Capstone White Paper March 6, 2000
[3] fossil fuel only, source: CEC Environmental Performance Report, 2001
[4] source: Distributed Generation Certification Program, Sec. 94203 California Code of Regulations

AC PROPULSION

Stationary Generation - Natural Gas

- Low-pressure system from offboard gas supply
- Manual or automatic fuel selection
- Gas carburetor with EGO-based closed loop control

AC PROPULSION

Emissions with Natural Gas

- Testing at CARB not possible
- Comparative data based concentration measurement
- HC and CO emissions higher with natural gas

	HC ppm		CO %		NOx ppm	
DC output	gas	petrol	gas	petrol	gas	petrol
4 kW	141	-57	3.1	0.006	7	2
7 kW	61	-72	1.8	0.007	7	7
10 kW	40	-73	1.3	0.010	7	7

AC PROPULSION

Conclusions

- Functionality demonstrated:
  - good performance and acceptable range as an EV
  - improved fuel economy and range compared to base vehicle
  - clean, efficient generation and export of electric power
- Emissions optimization required:
  - cold-start and warm-up strategies
  - natural gas fuel control
- Potential for:
  - reduction in operating emissions due to cold-start elimination
  - substitution of electricity for petroleum

Regulatory Issues

- Emissions regulations
  - mileage or output base
  - duty cycle, cold starts
  - operating cycle: plug-in or fill-up
  - stationary operation
- Utility Regulations
  - grid-tied operation
  - grid disconnect for UPS
- V2G Regulations and Control
  - communications
  - safety
  - commercial

AC PROPULSION

Plug-in Hybrids Use Grid Electricity

Substitution of grid electricity for gasoline reduces petroleum consumption more than plugless hybrids

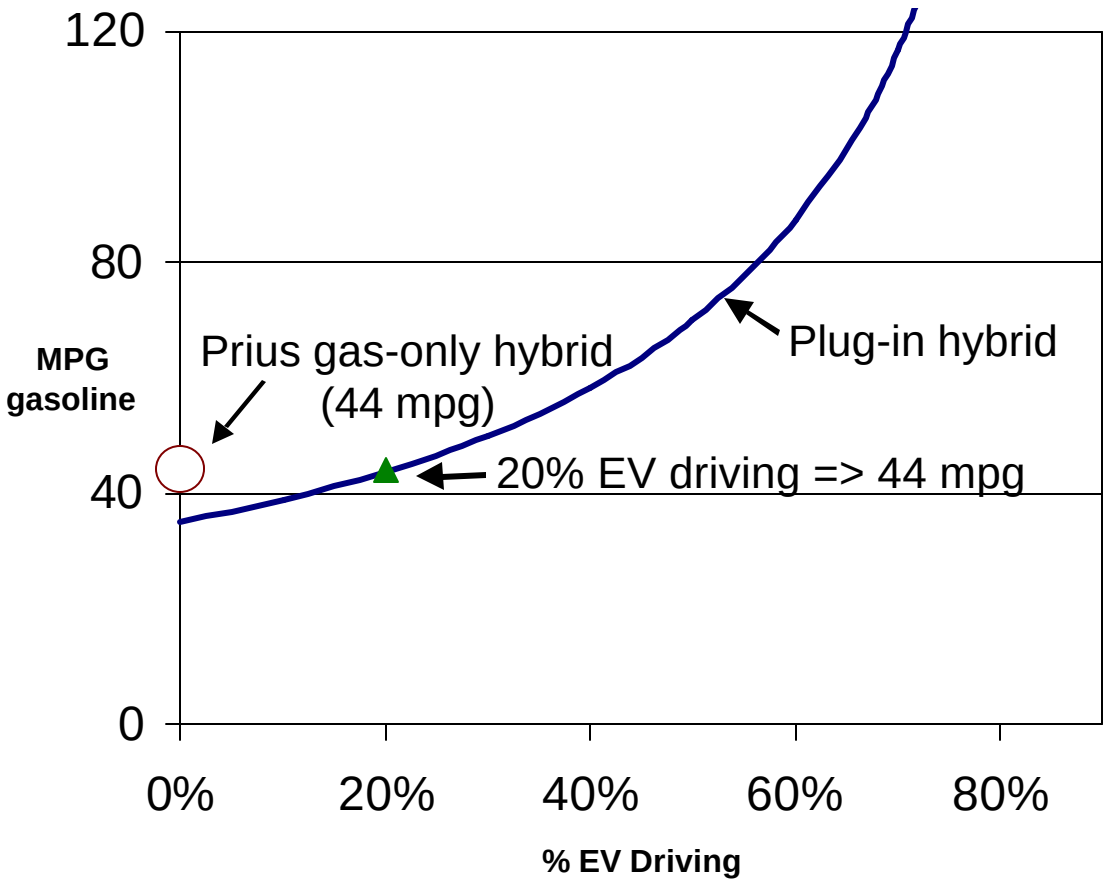

AC PROPULSION

Plug-in Hybrids - Other Benefits

- EV operation can eliminate cold starts for an unambiguous reduction in emissions
- Pure electric propulsion reduces noise and vibration, improves responsiveness.
- Consumers desire electric, zero-emission operation

AC PROPULSION

Next Steps

Possible follow-on projects for 2004:

- Extend EV range with Li Ion Batteries
- In-use testing to evaluate retail usage patterns
- In-use testing by fleets to evaluate onboard generation applications
- Durability tests of APU for possible bus application

AC PROPULSION