Driving Innovation ♦ Delivering Results

Life Cycle Analysis

environmental | economic | social

A Life Cycle Analysis Perspective of CCS

Greg Cooney

Associate – Booz Allen Hamilton

Energy Sector Planning and Analysis

April 5, 2016

LCA is well suited for energy analysis

- Draws a more complete picture than one focused solely on stack or tailpipe emissions
- Allows direct comparison of dramatically different options based on function or service
- Includes methods for evaluating a wide variety of emissions and impacts on a common basis
- Brings clarity to results through systematic definition of goals and boundaries
- Employed by LCFS to determine the carbon intensity of a fuel

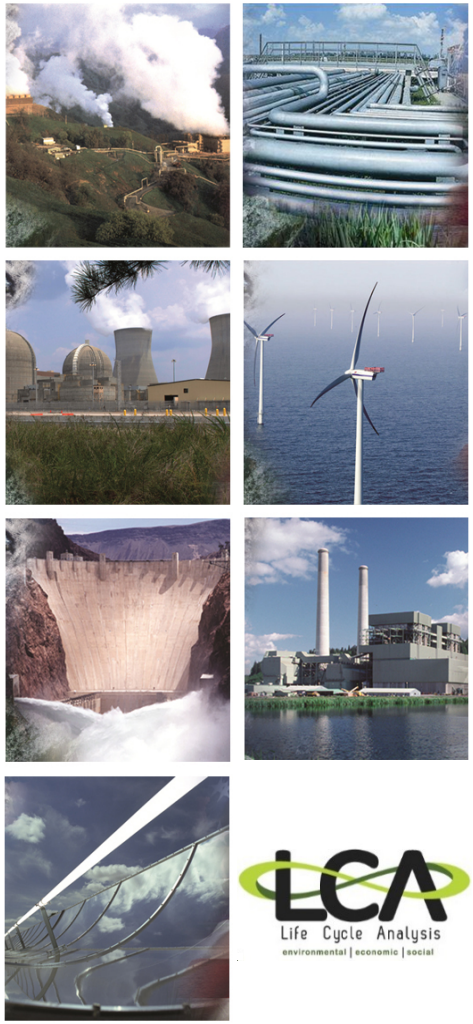

NETL CCUS-related publications

- **Gate-to-Grave Life Cycle Analysis Model of Saline Aquifer Sequestration of Carbon Dioxide *(Sept. 2013)***
- **Evaluating the Climate Benefits of CO_2-Enahanced Oil Recovery Using Life Cycle Analysis**
  - *Environmental Science & Technology*, 49(12), 7491-7500.
- **Gate-to-Gate Life Cycle Inventory and Model of CO_2-Enhanced Oil Recovery *(Sept. 2013)***
  - Full process detail and comparison of four gas processing technologies
- **Cradle-to-Gate Life Cycle Analysis Model for Alternative Sources of Carbon Dioxide *(Sept. 2013)***
  - Three potential sources considered: natural dome, ammonia production, natural gas processing
- **Saline Storage Cost Model**
- **All reports and models are accessible via:**

www.netl.doe.gov/LCA

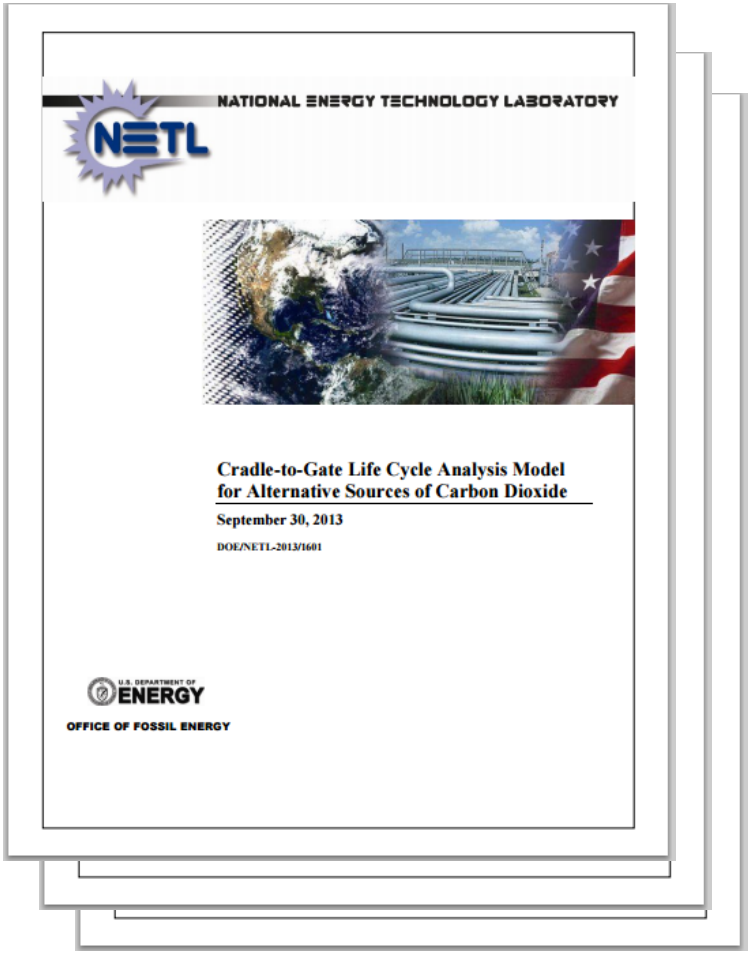
NATIONAL ENERGY TECHNOLOGY LABORATORY

Cradle-to-Gate Life Cycle Analysis Model for Alternative Sources of Carbon Dioxide

September 30, 2013

DOE/NETL-2013/1601

U.S. DEPARTMENT OF ENERGY

OFFICE OF FOSSIL ENERGY

Saline aquifers offer the largest potential for CO_2 storage

- Saline aquifers are geological formations saturated with brine water
- In the U.S. saline aquifers have broader geographical distribution than oil and gas reservoirs and have potential for large-capacity, long-term carbon dioxide (CO_2) storage
- CO_2 storage capacity of saline aquifers in U.S. has been estimated from 2.4 to 21.6 trillion tonnes of CO_2 (NETL, 2015)

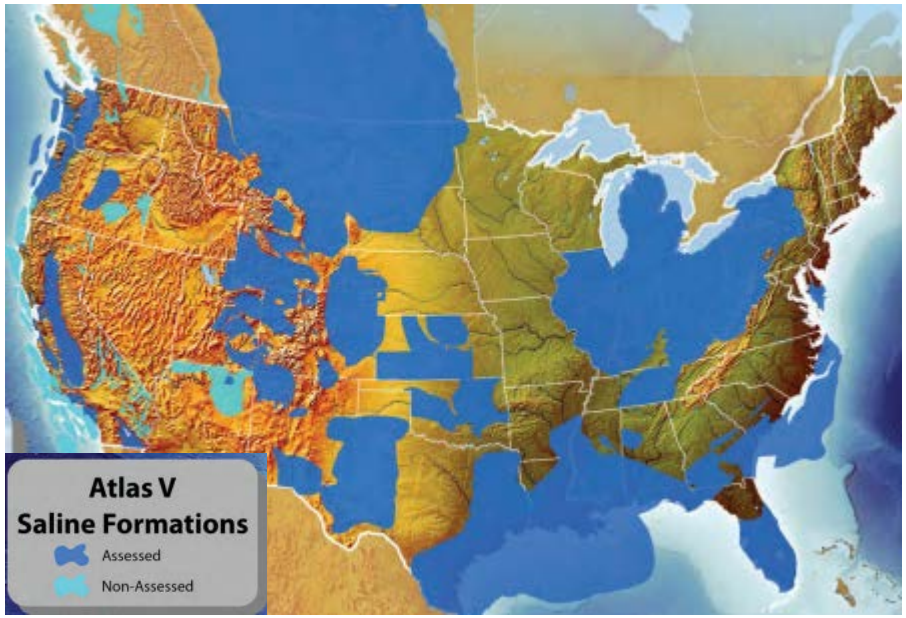

Image obtained from NETL Carbon Storage Atlas V (2015)

CCS Life cycle model accounts for construction and operations activities as a network of processes

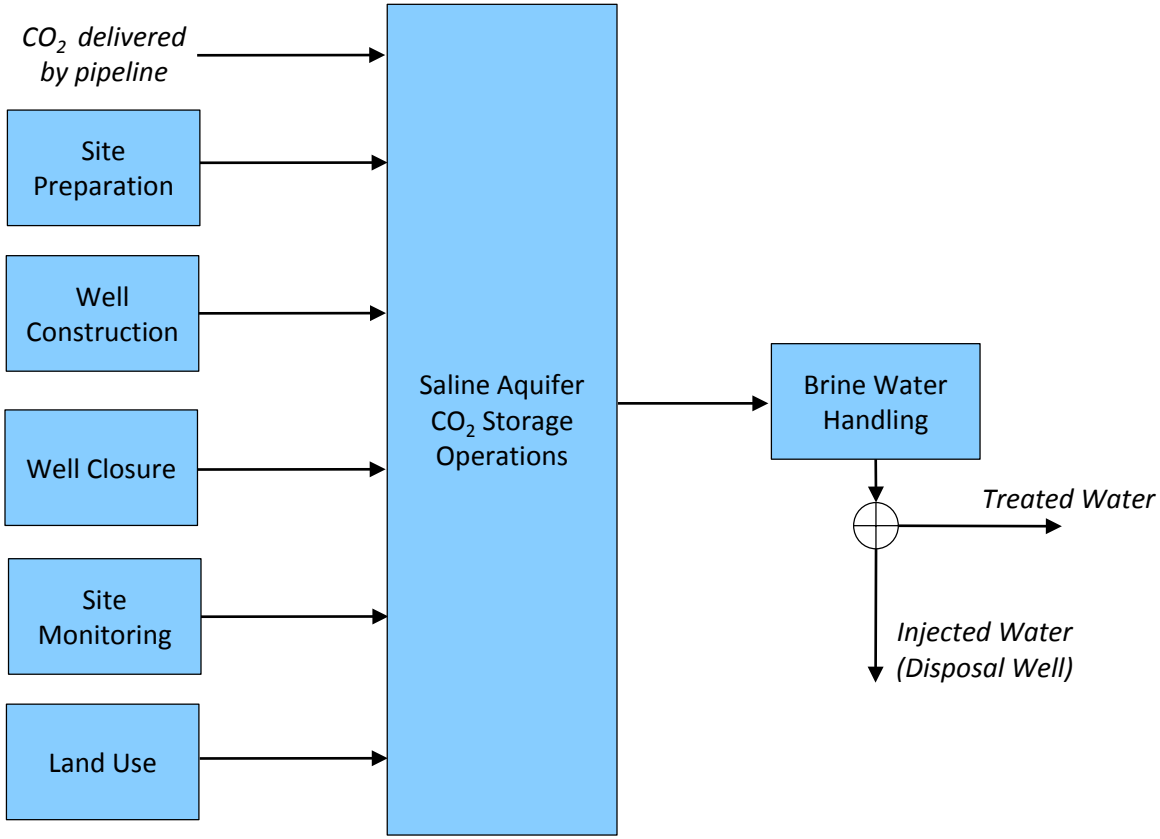

All unit processes are included in the unit process library, which is available on the NETL site:
netl.doe.gov/lca

CCS Life Cycle Model Structure: Site Preparation

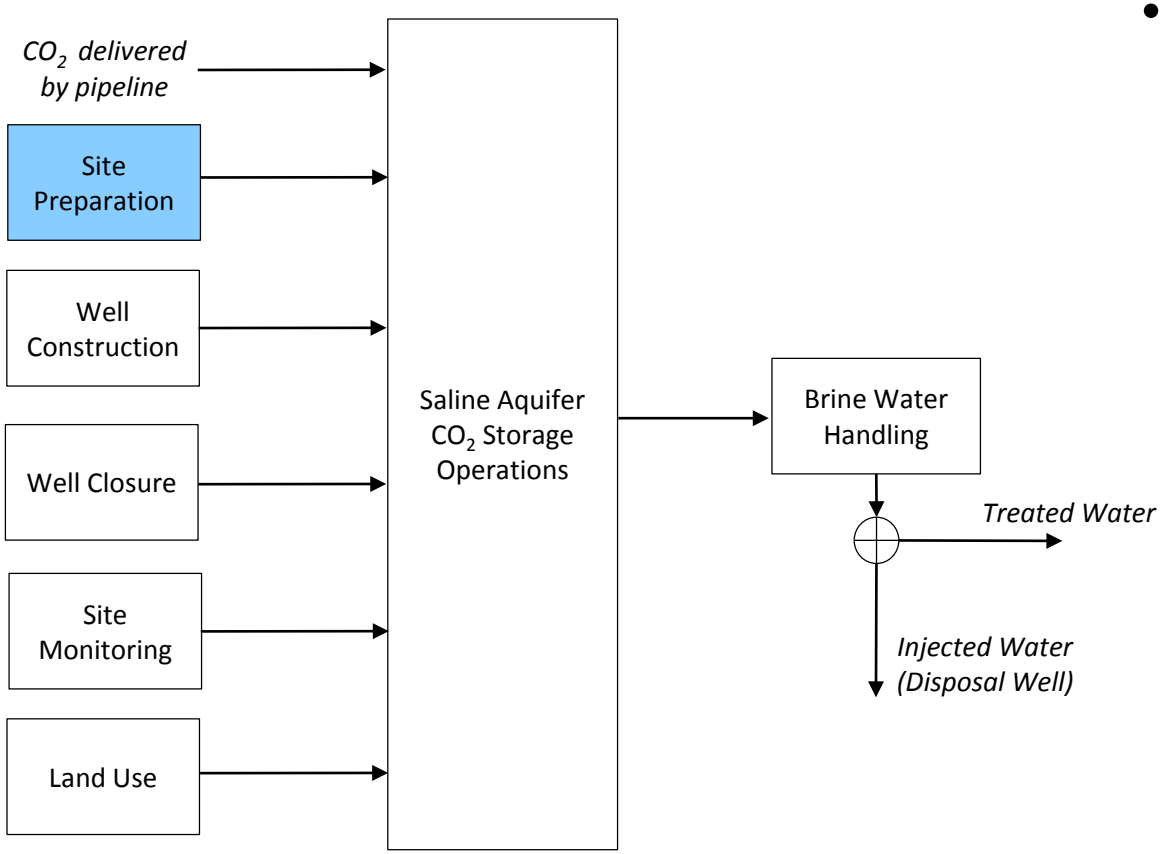

- **Site Preparation**
  - Preparation of saline aquifer site requires a seismic survey conducted by vibroseis trucks
  - Vibroseis trucks consume diesel for transport and equipment operation
  - Typical site survey takes seven, 12-hour days (CSLC, 2012).

CCS Life Cycle Model Structure: Well Construction

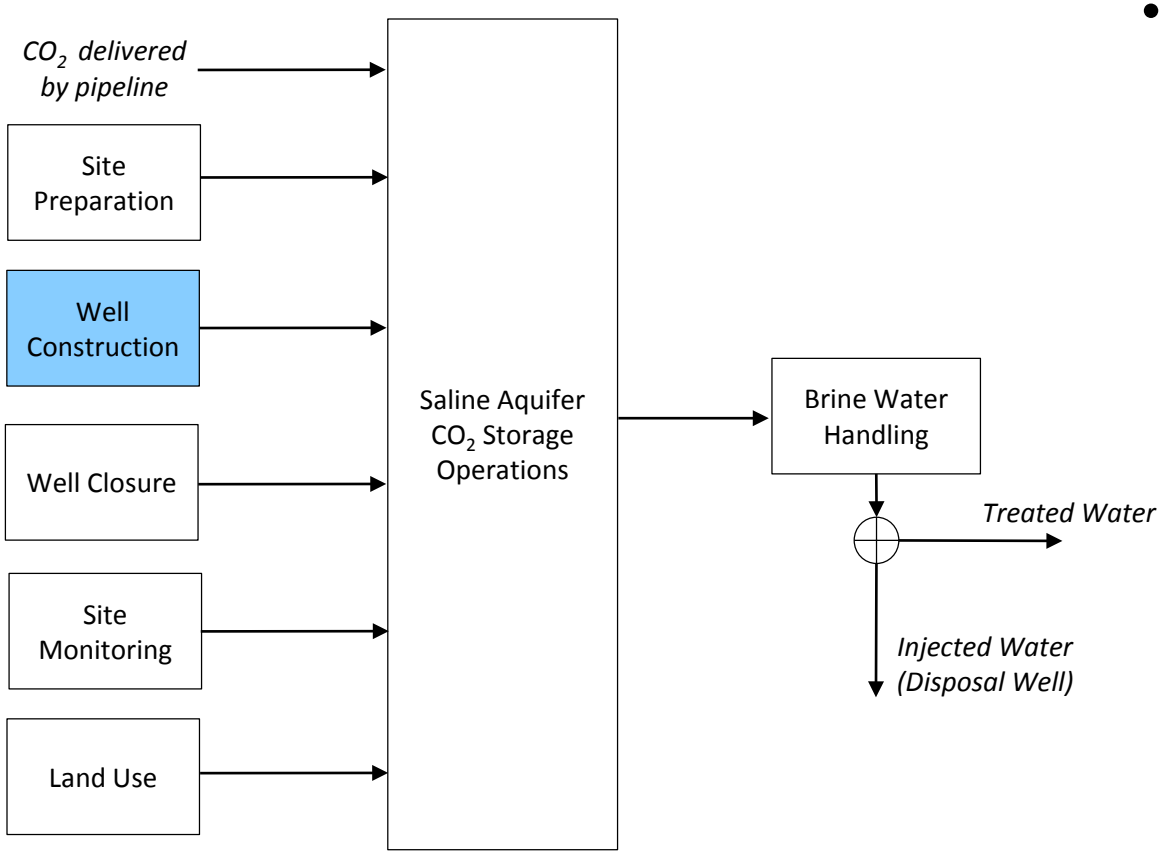

- **Well Construction**
  - Construction and installation of wells includes drilling of well bore, followed by installation of well casing
  - Well casing provides strength to well bore and prevents contamination of groundwater
  - Eight different well types of varying depths are required for CO_2 sequestration in a saline aquifer
  - NETL saline aquifer storage cost model has representative list of possible storage formations in U.S.

CCS Life Cycle Model Structure: Well Closure

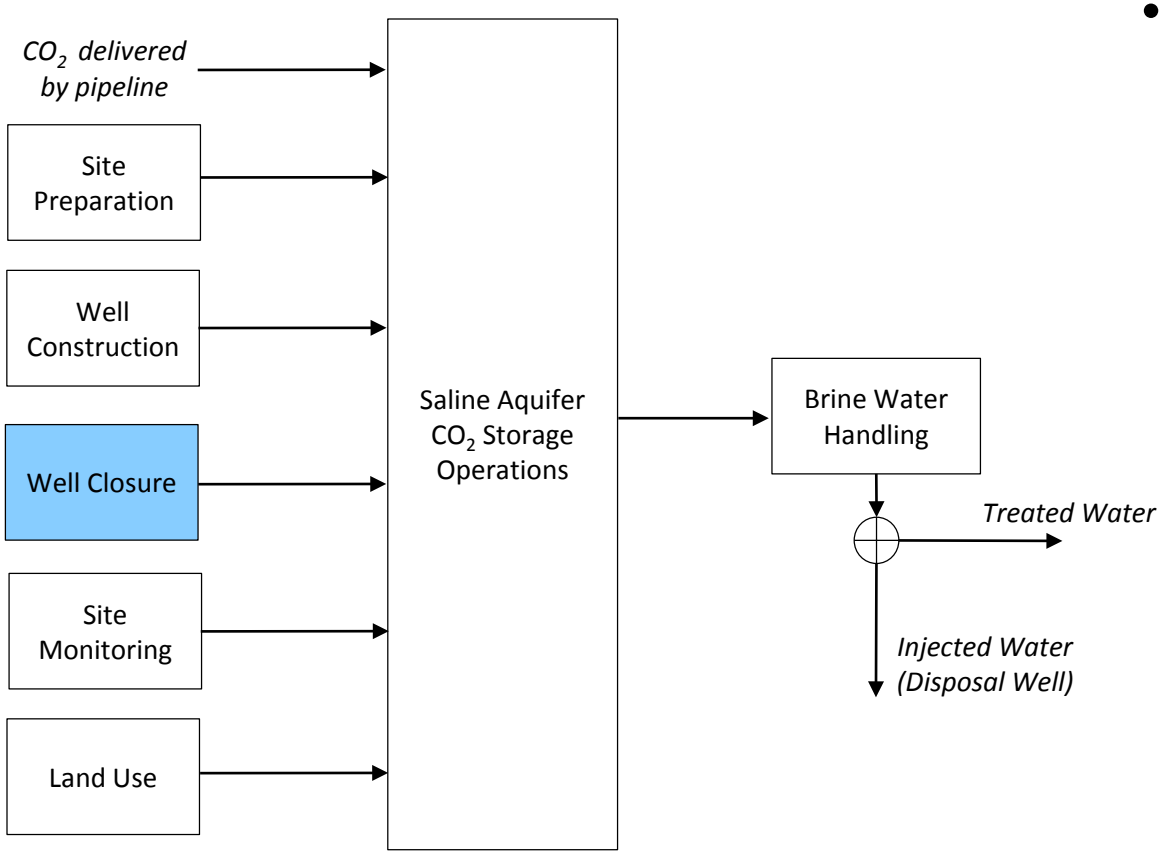

- **Well Closure**
  - Purpose for plugging wells prior to abandonment is to ensure that abandoned wells do not allow injected fluids or natural brines to pass into underground sources of drinking water (USDW) (EPA, 1994)
  - This analysis uses EPA guidance for Class II wells, defined as wells that inject fluids that are brought to surface in connection with conventional oil or natural gas production

CCS Life Cycle Model Structure: Site Monitoring

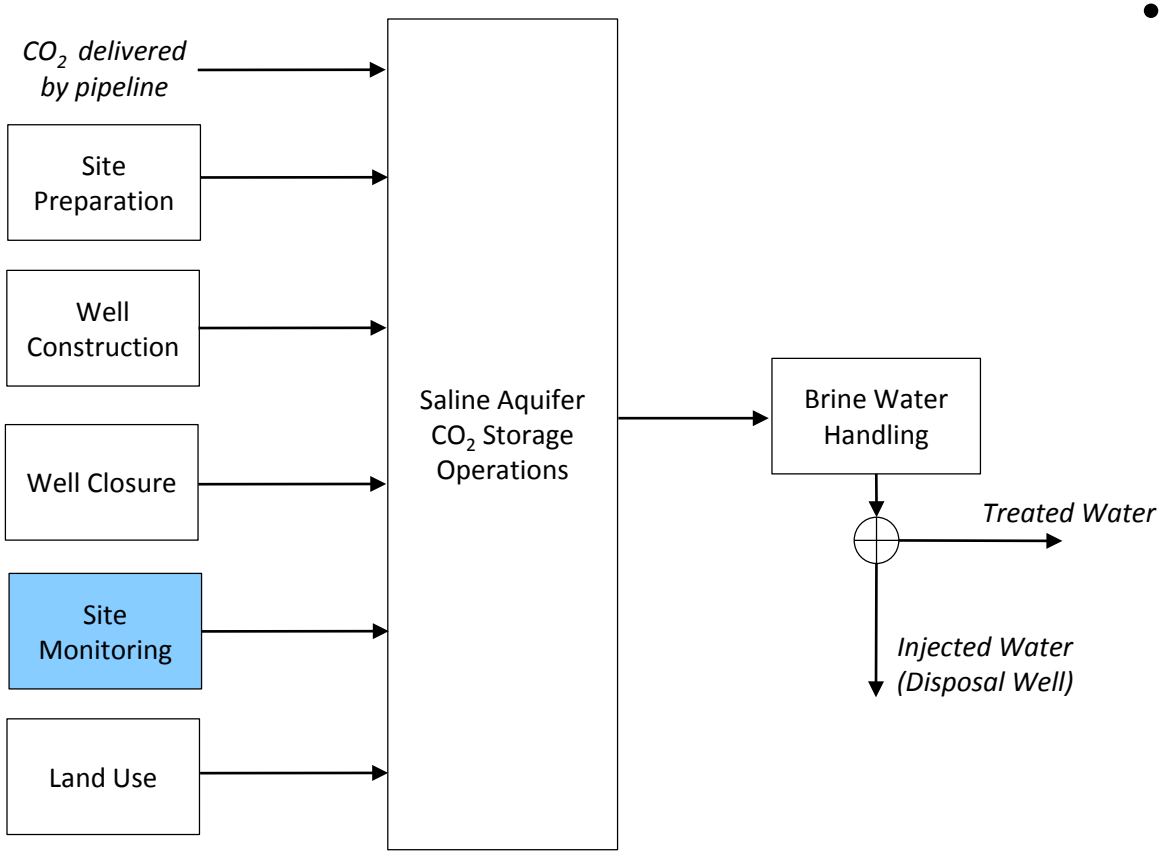

- **Site Monitoring**
  - This analysis accounts for construction of monitoring wells and seismic testing during site operations
  - Other types of monitoring activities are a negligible contribution to environmental burdens of saline aquifer site

CCS Life Cycle Model Structure: Storage Operations

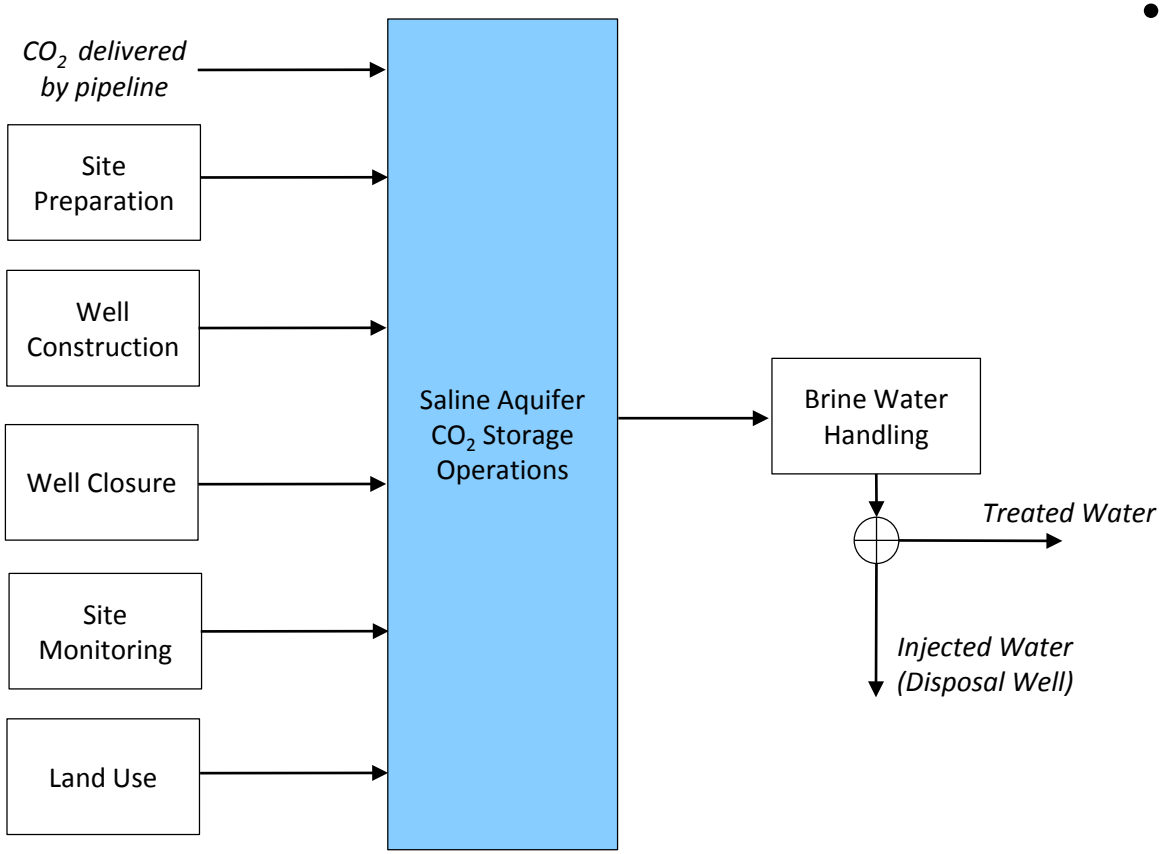

- **Storage Operations**
  - Operation of CO_2 injection site uses electricity to pressurize and inject incoming CO_2 into an underground formation
  - Electricity requirements of injection site are function of injection pressure and number of injection wells
  - In addition to fugitive CO_2 emissions from injection pump, this analysis also models leakage of CO_2 from underground formation
  - Brine water production from saline aquifer is one method to control pressure in underground formation, but it is not always required (ANL, 2011)

CCS Life Cycle Model Structure: Brine Management

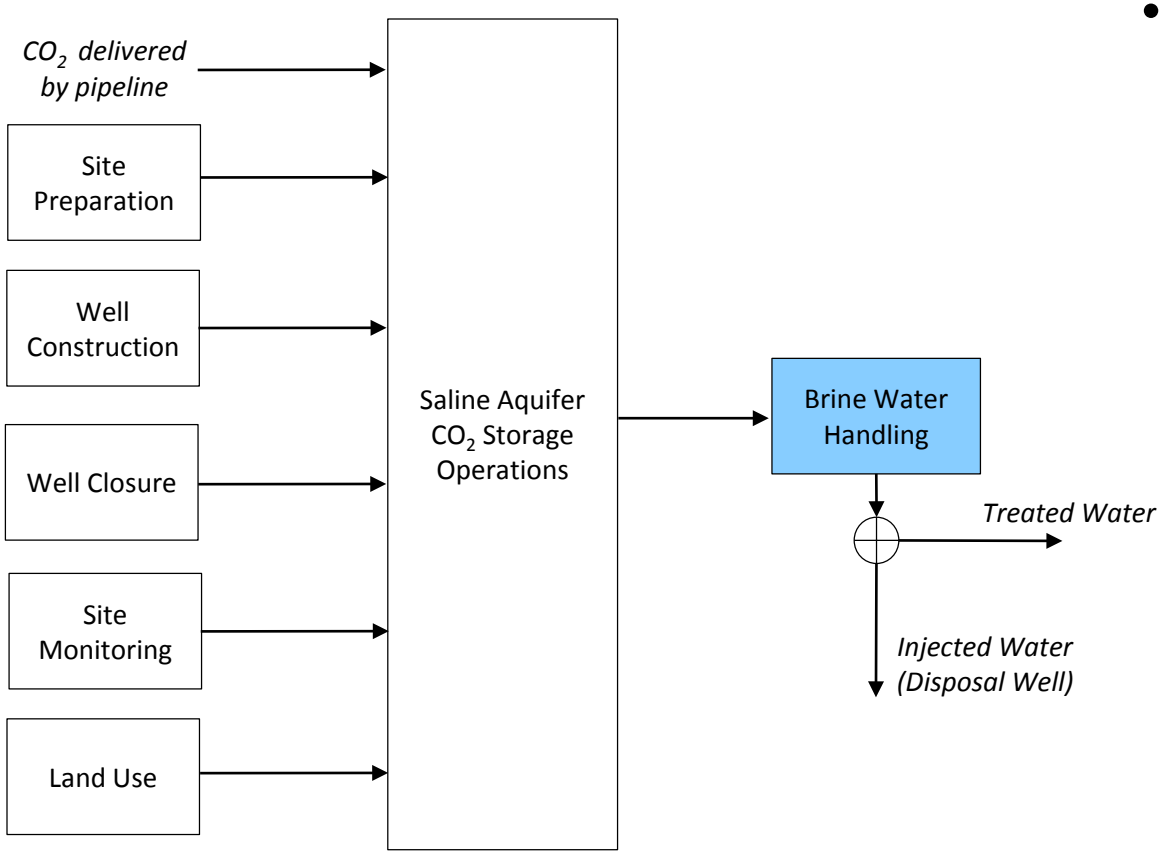

- **Brine Management**
  - Management of brine at saline aquifer site consumes electricity, used by water treatment processes and/or injection pumps
  - Two water treatment technologies are used in this analysis: reverse osmosis and vapor compression distillation
  - Instead of treating produced brine water at surface, reinjection into suitable underground formation near production site is possible (ANL, 2011)

Accounting for potential formation leakage is based on the amortization of potential losses

- ***Maximum*** of one percent of the stored CO_2 eventually migrates to the surface and is released to the atmosphere over a 100-year monitoring period
- Design expectation is for zero leakage
- Assumption necessary to bracket the range of potential loss until measurement data from operating storage sites can validate this loss factor
- Expected parameter value for the model (0.5 percent) was selected as the midpoint between the maximum leakage rate of 1 percent and no leakage

Life cycle model parameters allow for customization to represent specific aquifers

Parameter Name	Low	Expected	High	Units	Description
Site Preparation/Monitoring					
Seismic truck fuel efficiency	N/A	1.08E-02	N/A	km/liter	Vibroseis truck (diesel engine) seismic survey average fuel consumption
Number of trucks	N/A	4	N/A	dimensionless	Number of vibroseis trucks needed for seismic survey
Survey Area	N/A	2.89E+01	N/A	square miles	Surface area of CO_2 plume in formation
Well Construction/Closure					
Above-seal Monitoring Well	N/A	2.36E+03	N/A	m	Well depth
Groundwater Monitoring Well	N/A	1.52E+02	N/A	m	Well depth
Injection Well	N/A	2.52E+03	N/A	m	Well depth
In-Reservoir Monitoring Well	N/A	2.42E+03	N/A	m	Well depth
Stratographic Test Well	N/A	2.62E+03	N/A	m	Well depth
Vadose Zone Monitoring Well	N/A	1.22E+01	N/A	m	Well depth
Water Disposal Well	N/A	2.52E+03	N/A	m	Well depth
Water Production Well	N/A	2.52E+03	N/A	m	Well depth
CO_2 Injection Operations					
Brine Production	1.3	1.4	1.5	kg/kg	Amount of brine produced from saline aquifer per kg of CO_2 injected
CO_2 Mass Flow	N/A	1.00E+04	N/A	tonne/day	Flow rate of CO_2 through compressor
Formation Leakage	0.0%	0.5%	1.0%	%	Percentage of sequestered CO_2 that leaks from saline aquifer over 100 years
Injection Pump Seal Leakage Factor	N/A	6.36E+01	N/A	kg/MW-day	Emission factor for CO_2 released to air from injection pump
Injection Pump Power	2.47E-04	5.33E-04	7.70E-04	MW/tonne CO_2/day	Pumping power requirements per unit injected per day
Injection Wells	N/A	2	N/A	wells	Number of injection wells for formation
Injection pressure	2,090	3,780	5,180	psia	Hydrostatic Pressure at Midpoint of Saline Aquifer Formation
Injection Years	N/A	100	N/A	years	Number of years of CO_2 injection into saline aquifer sequestration site

Life cycle model parameters allow for customization to represent specific aquifers

Parameter Name	Low	Expected	High	Units	Description
Brine Handling					
Brine Total Dissolved Solids	4.00E+04	4.00E+04	6.00E+04	mg/L	Total dissolved solids content in brine that is produced
Distillation Power	N/A	N/A	1.41E-03	kWh/kg	Power requirements for distillation treatment per kg of brine influent
Brine Injection Pump Power	4.30E-04	4.30E-04	4.30E-04	kWh/kg	Power requirements for water injection pump per kg of water injected
Reverse Osmosis Power	7.16E-04	N/A	N/A	kWh/kg	Power requirements for reverse osmosis treatment per kg of brine influent
Treatment Scenario	1	0	1	dimensionless	0 = reinjection; 1 = on-site treatment
Electricity Grid	**U.S. Mix**	**ERCOT Mix**	**GTSC**		
Coal	45.87%	33.03%	0.00%	%	Percentage of U.S. power from coal
Geothermal	0.38%	0.00%	0.00%	%	Percentage of U.S. power from geothermal
Gas Turbine Simple Cycle (GTSC)	0.00%	0.00%	100.00%	%	Percentage of U.S. power from natural gas simple cycle turbine
Hydro	7.30%	0.16%	0.00%	%	Percentage of U.S. power from hydropower
Natural Gas	22.65%	47.90%	0.00%	%	Percentage of U.S. power from natural gas
Nuclear	20.43%	12.31%	0.00%	%	Percentage of U.S. power from nuclear
Petroleum	0.95%	1.05%	0.00%	%	Percentage of U.S. power from petroleum
Solar	0.03%	0.00%	0.00%	%	Percentage of U.S. power from solar
Wind	2.39%	5.54%	0.00%	%	Percentage of U.S. power from wind

Electricity generation to for injection and fugitive leaks account for >95% life cycle GHGs

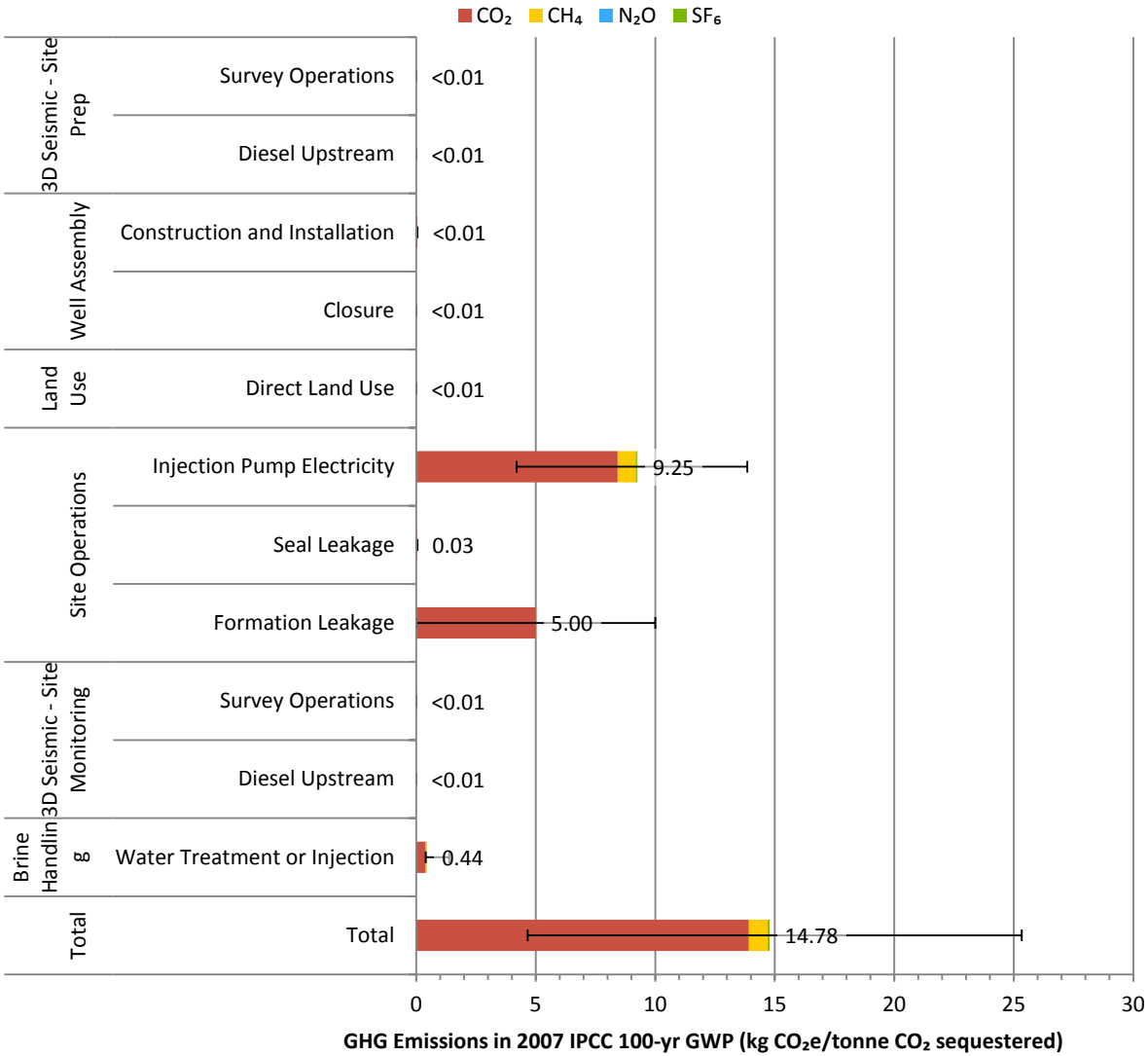

- Emissions associated with electricity for CO_2 injection pump compose 62.6 percent of gate-to-gate GHG emissions
- Next highest contributor is leakage of sequestered CO_2 from formation (33.8 percent) based on 0.5% leakage
- Lower bound of uncertainty bars for formation leakage is zero, representing a scenario with no leakage from formation
- Uncertainty in CO_2 injection pump electricity requirement is based on power demand for pump to achieve required injection pressure (function of geology)
- Added uncertainty for pumping GHG emissions is due to source of electricity to power pump (U.S. grid mix, ERCOT mix, GTSC)

Life cycle GHG emissions are most sensitive to the amount of power required for injection

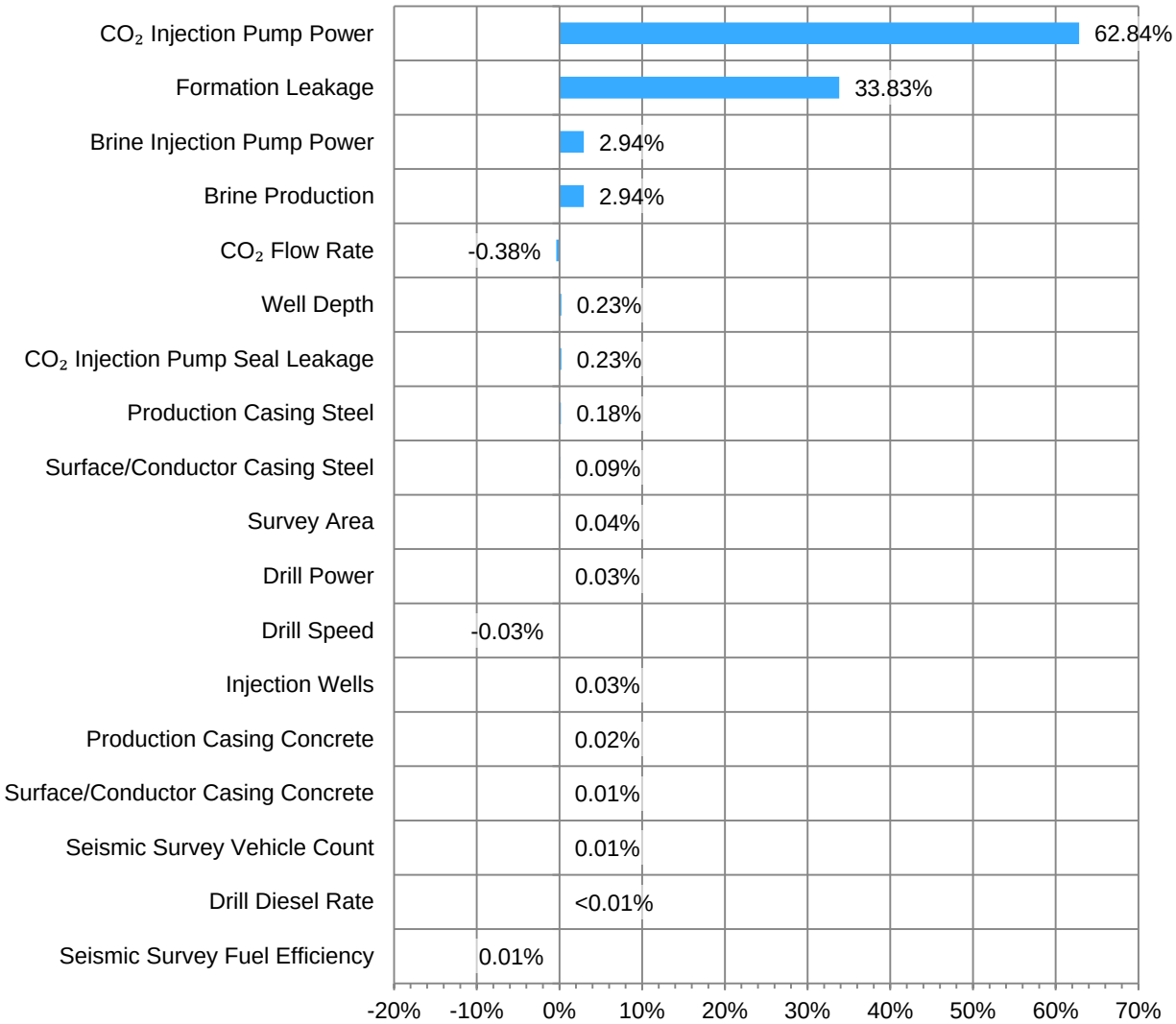

- Based on gate-to-gate boundaries, a 100 percent increase in CO_2 injection pump power consumption causes an 62.8 percent increase in total GHG emissions
- A 100 percent increase in leakage rate of CO_2 from formation causes a 33.8 percent increase in gate-to-gate GHG emissions
- GHG emissions are not sensitive to changes in parameters related to well construction and closure, site preparation, and site monitoring
- Two of four most sensitive parameters are linked to electric power demands for a process – GHG emissions are driven by composition of electricity grid

Uncertainty in the gate-to-grave emissions is almost entirely based on injection and leakage

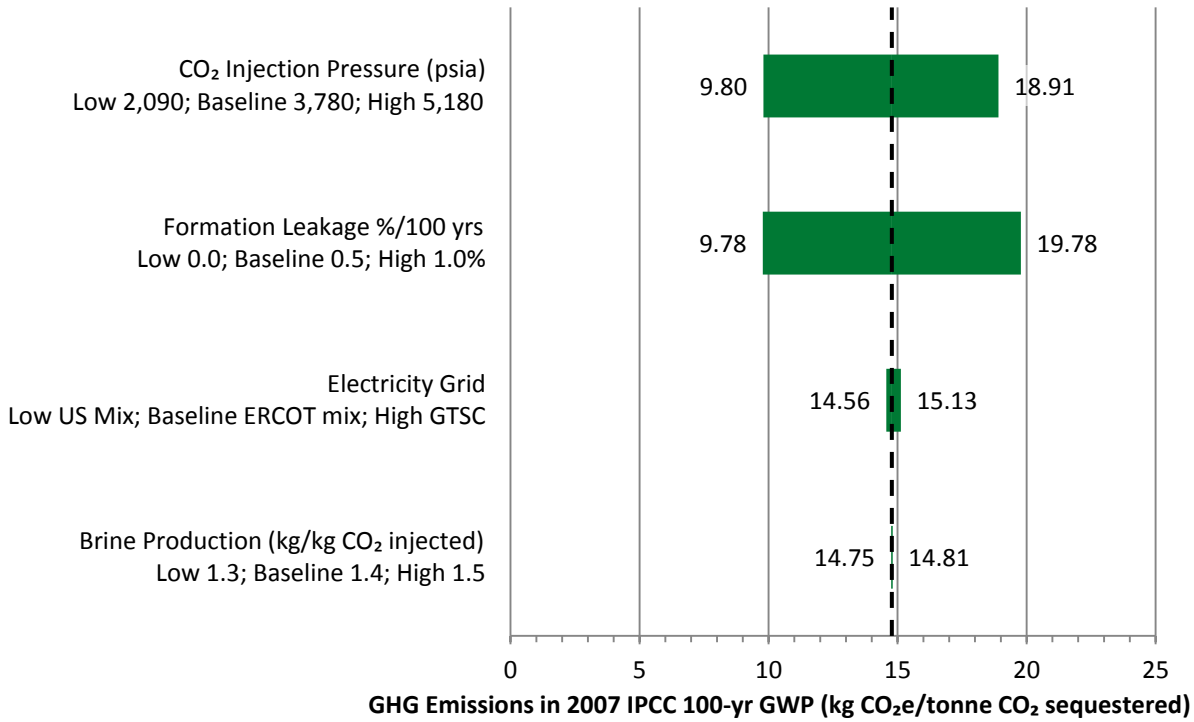

- This figure presents sensitivity results based on the uncertainty in the parameter values previously highlighted
- In this system, the majority of uncertainty is driven by required injection pressure and formation leakage, with a smaller amount of uncertainty added based on the composition of the electricity grid and the brine production rate from the aquifer.

Cradle-to-Grave Examples of CCS: Natural Gas Electricity Generation and Ethanol Production

Natural Gas Power (NGCC)

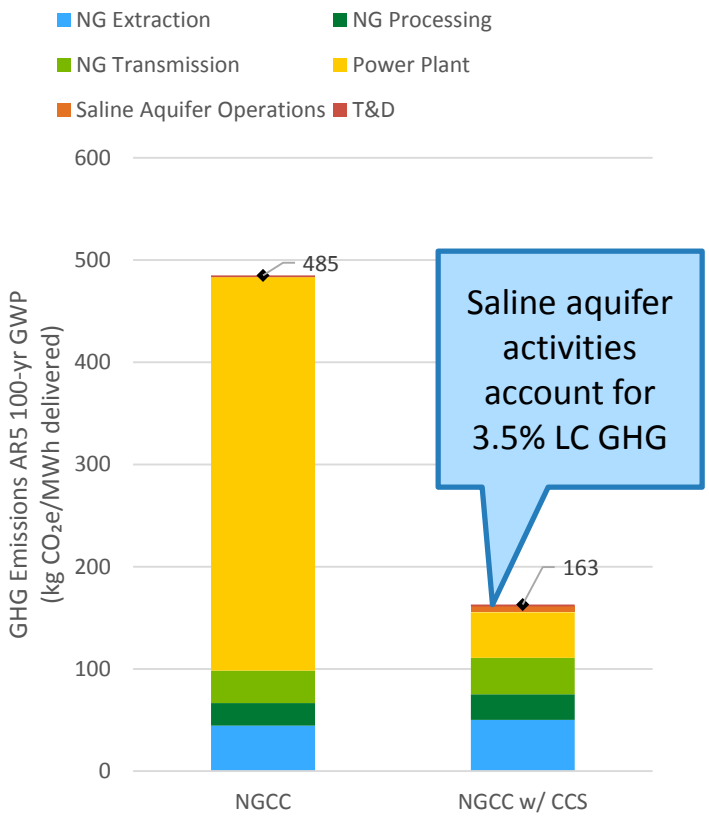

Ethanol Production (Dry Mill)

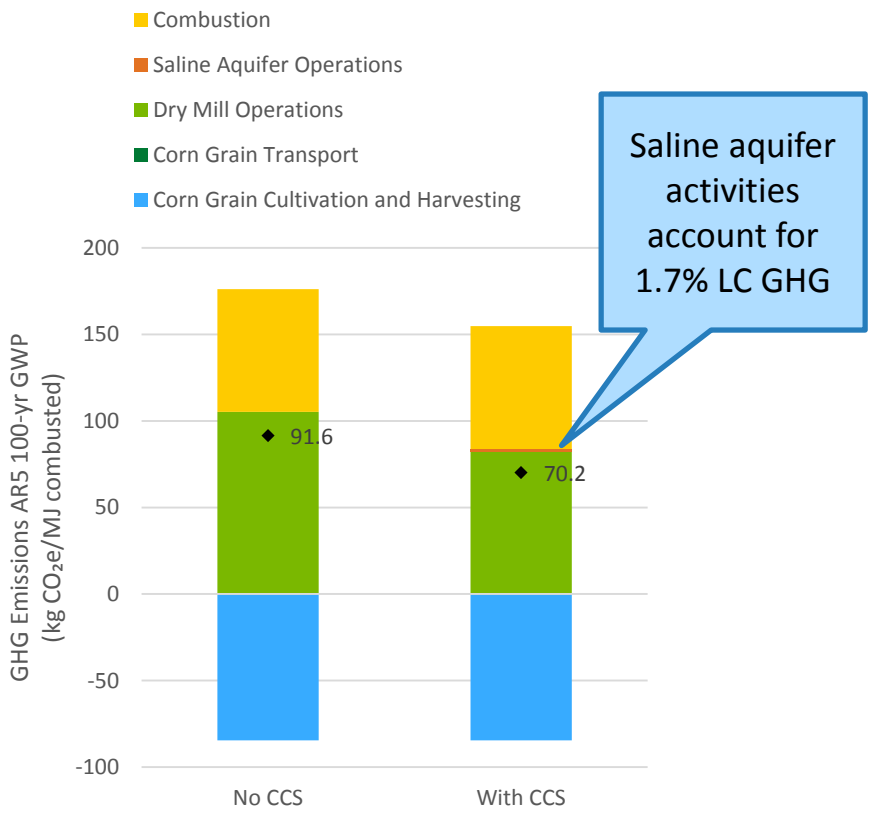

Saline aquifer sequestration is one part of a complex and integrated system with multiple pathways

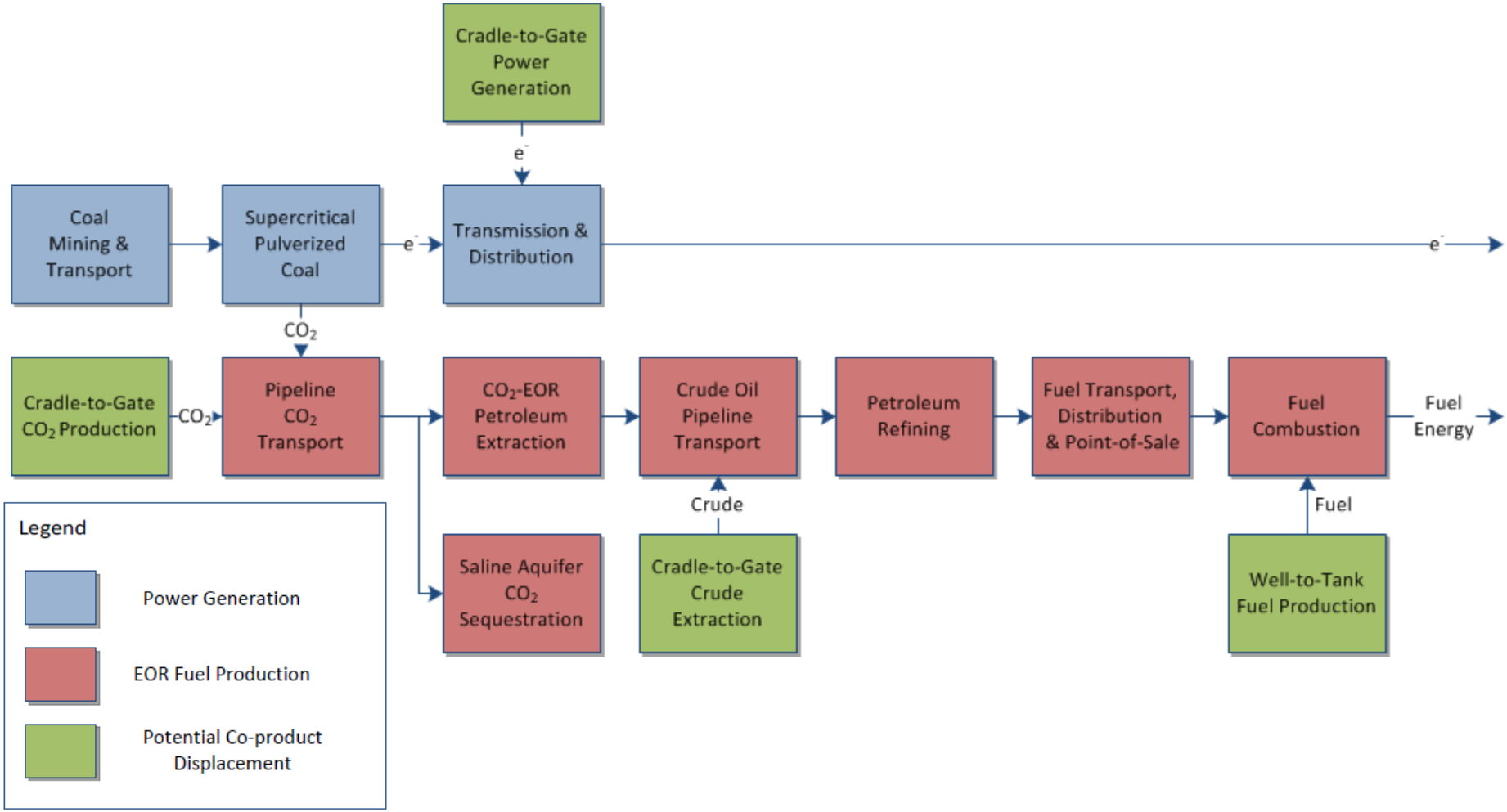

References

ANL. (2011). Management of Water Extracted from Carbon Sequestration Projects. (ANL/EVS/R-11/1). Chicago, Illinois: Argonne National Laboratory Retrieved July 25, 2012, from http://www.ipd.anl.gov/anlpubs/2011/03/69386.pdf

CSLC. (2012). Central Coastal California Seismic Imaging Project. Retrieved July 31, 2012, from http://www.slc.ca.gov/Division_Pages/DEPM/DEPM_Programs_and_Reports/CCCSIP/CCCSIP.html

CSM. (2009). An Integrated Framework for Treatment and Management of Produced Water - Technical Assessment of Produced Water Treatment Technologies. Golden, Colorado: Colorado School of Mines.

EPA. (1994). Plugging and Abandoning Injection Wells. Retrieved September 11, 2012, from http://www.epa.gov/r5water/uic/r5guid/r5_04.htm

EPA. (2010). Geologic CO_2 Sequestration Technology and Cost Analysis (EPA 816-R10-008). Washington, DC: Environmental Protection Agency Retrieved July 6, 2012, from http://water.epa.gov/type/groundwater/uic/class6/upload/geologicco2sequestrationtechnologyandcostanalysisnov2010.pdf

EPA. (n.d.). Geologic Sequestration Class VI Wells. Environmental Protection Agency Retrieved September 11, 2012, from http://water.epa.gov/type/groundwater/uic/class6/gsclass6wells.cfm

McCollum, D. L., & Ogden, J. M. (2006). Techno-Economic Models for Carbon Dioxide Compression, Transport, and Storage & Correlations for Estimating Carbon Dioxide Density and Viscosity. (UCD-ITS-RR-06-14). Davis, California: Institute of Transportation Studies, University of California Davis Retrieved September 10, 2012, from http://pubs.its.ucdavis.edu/publication_detail.php?id=1047

NETL. (2012). Carbon Sequestration Atlas of the United States and Canada Fourth Edition. National Energy Technology Laboratory Retrieved January 31, 2013, from http://www.netl.doe.gov/technologies/carbon_seq/refshelf/atlasIV/

Contact Information

Timothy J. Skone, P.E.

Senior Environmental Engineer • Strategic Energy Analysis and Planning Division • (412) 386-4495 • *timothy.skone@netl.doe.gov*

Greg Cooney

Associate • Booz Allen Hamilton • (412) 386-7555 • cooney_gregory@*bah.com*

Joe Marriott, Ph.D.

Lead Associate • Booz Allen Hamilton • (412) 386-7557 • *marriott_joe@bah.com*

Life Cycle Analysis

environmental | economic | social

netl.doe.gov/LCA

LCA@netl.doe.gov

@NETL_News