California Environmental Protection Agency

Air Resources Board

2007 Oil and Gas Industry Survey Results

Final Report (Revised)

October 2013

State of California
California Environmental Protection Agency
Air Resources Board

2007 Oil and Gas Industry Survey Results

Final Report
(Revised)

October 2013

Principal Author:
Stephanie Detwiler

Reviewed and Approved By:
James F. Nyarady, Manager
Strategy Evaluation Section

Floyd Vergara, Chief
Alternative Fuels Branch

This report has been reviewed and approved for publication by the Air Resources Board (ARB). Approval does not signify that the contents reflect the views and policies of the ARB, nor does mention of any company constitute endorsement. This report is a direct reflection of the California process and equipment survey (for calendar year 2007) submitted by the companies that responded to the "ARB Oil and Gas Industry Survey" conducted in 2009.

Acknowledgements

The 2007 ARB Oil and Gas Industry Survey and this report were developed with the assistance of the following ARB staff:

Nancy Adams
Joseph Fischer
Christain Hurley
Luis Leyva
Camille McCallion
Sarah Penfield
Minh Pham
Edgar Vidrio
Glen Villa

We would like to extend our appreciation to the following trade associations for facilitating discussion among industry and governmental representatives:

Western States Petroleum Association (WSPA)
California Independent Producers Association (CIPA)
Independent Oil Producers' Agency (IOPA)

We would also like to thank those industry representatives that met with ARB staff to share specific technical information and all the respondents that completed the survey.

Table of Contents

Glossary……ix
Executive Summary ES-1
Chapter 1 – Survey Development 1-1
Chapter 2 – General Information 2-1
Chapter 3 – Overview of Total California Emissions 3-1
Chapter 4 – Wells 4-1
Chapter 5 – Electricity Generation and Use 5-1
Chapter 6 – Vapor Recovery 6-1
Chapter 7 – Combustion Equipment 7-1
Chapter 8 – Components 8-1
Chapter 9 – Automated Control Devices 9-1
Chapter 10 – Inspection and Maintenance 10-1
Chapter 11 – Natural Gas Dehydrators 11-1
Chapter 12 – Natural Gas Sweetening and Acid Gas Removal 12-1
Chapter 13 – Other Natural Gas Processing 13-1
Chapter 14 – Total Natural Gas Processing Emissions 14-1
Chapter 15 – Natural Gas Compressors 15-1
Chapter 16 –Pipeline Pigging and Natural Gas Gathering Pipelines 16-1
Chapter 17 – Separators 17-1
Chapter 18 – Crude Oil Sumps and Pits 18-1
Chapter 19 – Crude Oil Storage Tanks 19-1
Chapter 20 – Overview of California Emissions from Crude Oil Production, Processing, and Storage 20-1
Chapter 21 – Overview of California Emissions from Dry Natural Gas Production, Processing, and Storage 21-1
Appendix A : 2007 Oil and Gas Industry Survey A-1
Appendix B : Emission Calculation Methodologies and Corresponding Emission Factors B-1
Appendix C : Site Visits and Meetings C-1
Appendix D : Internal Combustion Engine Use Categories D-1
Appendix E : Separator Type Categories E-1

List of Tables and Figures

Chapter 1 – Survey Development
Table 1-1: Site Visits and Meetings 1-2

Chapter 2 – General Information
Table 2-1: Number of Facilities by Business Type 2-2
Table 2-2: Number of Facilities by Primary Business Type 2-3
Table 2-3: Crude Oil Totals 2-4
Table 2-4: Natural Gas Totals 2-5
Table 2-5: Global Warming Potentials 2-6

Chapter 3 – Overview of Total California Emissions
Table 3-1: Total California 2007 Emissions (Metric Tons/Year) 3-1
Table 3-2: Total California Emissions by Primary Business Type (Metric Tons/Year) .. 3-2
Table 3-3: Total California Combustion, Vented, and Fugitive Emissions by Primary Business Type (Metric Tons/Year) 3-2
Table 3-4: Total California Emissions by Air District (Metric Tons/Year) 3-3
Table 3-5: Total California Combustion, Vented, and Fugitive Emissionsby Air District (Metric Tons/Year) 3-3
Table 3-6: Combustion Emissions by Combustion Type (Metric Tons/Year) 3-4
Table 3-7: Combustion Emissions by Primary Business (Metric Tons/Year) 3-4
Table 3-8: Combustion Emissions by Air District (Metric Tons/Year) 3-5
Table 3-9: Vented Emissions by Source Type (Metric Tons/Year) 3-5
Table 3-10: Vented Emissions by Primary Business Type (Metric Tons/Year) 3-6
Table 3-11: Vented Emissions by Air District (Metric Tons/Year) 3-6
Table 3-12: Fugitive Emissions by Source Type (Metric Tons/Year) 3-7
Table 3-13: Fugitive Emissions by Primary Business Type (Metric Tons/Year) 3-7
Table 3-14: Fugitive Emissions by Primary Business Type (Metric Tons/Year) 3-8
Table 3-15: Total California Emissions by CO_2e Range (Metric Tons/Year) 3-8
Table 3-16: Total California Combustion Emissions by CO_2e Range 3-9
Table 3-17: Total California Vented Emissions by CO_2e Range (Metric Tons/Year) 3-9
Table 3-18: Total California Fugitive Emissions by CO_2e Range 3-9

Chapter 4 – Wells
Table 4-1: Number of Crude Oil Active Wells and Well Cellars by API Range 4-2
Table 4-2: Number of Natural Gas Active Wells and Well Cellars 4-2
Table 4-3: Number of Crude Oil New Wells Drilled, Well Completions, Well Workovers and Well Cleanups by API Range 4-2
Table 4-4: Number of Natural Gas New Wells Drilled, Well Completions, Well Workovers, and Well Cleanups 4-2
Table 4-5: Emissions of Crude Oil Wells by API Range (Metric Tons/Year) 4-3
Table 4-6: Emissions of Natural Gas Wells (Metric Tons/Year) 4-3
Table 4-7: Emissions of Crude Oil Well Cellars by API Range (Metric Tons/Year) 4-3
Table 4-8: Emissions of Crude Oil Well Workovers by API Range 4-4
Table 4-9: Emissions of Natural Gas Well Workovers (Metric Tons/Year) 4-4

Table 4-10: Emissions of Crude Oil Well Cleanups by API Range 4-4
Table 4-11: Emissions of Natural Gas Well Cleanups (Metric Tons/Year) 4-4

Chapter 5 – Electricity Generation and Use
Table 5-1: Electricity by Primary Business (Metric Tons/Year) 5-1
Table 6-1: Number of Vapor Recovery Units by Type 6-1

Chapter 6 – Vapor Recovery
Table 6-2: Vapor Recovery Combustion Emissions by Type (Metric Tons/Year) 6-2
Table 6-3: Carbon Adsorber Vented Emissions (Metric Tons/Year) 6-2
Table 6-4: Vapor Recovery Combustion Emissions by Use (Metric Tons/Year) 6-3
Table 6-5: Number of Combustion Vapor Recovery Units by Size 6-3

Chapter 7 – Combustion Equipment
Table 7-1: External Combustion Emissions by Equipment Type (Metric Tons/Year) ... 7-2
Table 7-2: Age of External Combustion Units 7-3
Table 7-3: Internal Combustion Emissions by Equipment Type (Metric Tons/Year) 7-3
Table 7-4: Age of Internal Combustion Units 7-4
Table 7-5: Combustion Emissions of Internal Combustion Engines by Use 7-4
Table 7-6: Combustion Emissions of Internal Combustion Engines by Type 7-5
Table 7-7: Turbine Combustion Emissions by Use (Metric Tons/Year) 7-5
Table 7-8: Turbine Combustion Emissions by Cycle Type (Metric Tons/Year) 7-6
Table 7-9: Cogeneration Combustion Emissions by Type (Metric Tons/Year) 7-6
Table 7-10: Combustion Emissions by Combustion Type (Metric Tons/Year) 7-7
Table 7-11: Combustion Emissions by Primary Business (Metric Tons/Year) 7-7
Table 7-12: Combustion Emissions by Fuel Type (Metric Tons/Year) 7-8

Chapter 8 – Components
Table 8-1: Number of Components by Service Type 8-1
Table 8-2: Fugitive Emissions of Components by Primary Business Type 8-2
Table 8-3: Fugitive Emissions of Components by Service Type 8-2
Table 8-4: Fugitive Emissions of Components by Type (Metric Tons/Year) 8-3
Table 8-5: Fugitive Emissions of Natural Gas Components by Type 8-3
Table 8-6: Fugitive Emissions of Light Crude[1] Components by Type 8-4
Table 8-7: Fugitive Emissions of Heavy Crude[1] Components by Type 8-4

Chapter 9 – Automated Control Devices
Table 9-1: Vented Emissions of Automated Control Devices by Primary Business 9-2
Table 9-2: Vented Emissions of Automated Control Devices by Type 9-2

Chapter 10 – Inspection and Maintenance
Table 10-1: Number of Facilities Utilizing Each Leak Threshold 10-1

Chapter 11 – Natural Gas Dehydrators
Table 11-1: Vented Emissions of Natural Gas Dehydrators by Type 11-2
Table 11-2: Fugitive Emissions of Natural Gas Dehydrators by Type 11-2

Table 11-3: Volume of Natural Gas Dehydrators by Type 11-2
Table 11-4: Total Emissions of Natural Gas Dehydrators (Metric Tons/Year) 11-3
Table 11-5: Natural Gas Dehydrators Percent with Vapor Recovery 11-3
Table 11-6: Natural Gas Dehydrators Types of Vapor Recovery 11-3

Chapter 12 – Natural Gas Sweetening and Acid Gas Removal
Table 12-1: Vented Emissions of Natural Gas AGR Units by Type 12-2
Table 12-2: Fugitive Emissions of Natural Gas AGR Units by Type 12-2
Table 12-3: Total Emissions of Natural Gas AGR Units (Metric Tons/Year) 12-3
Table 12-4: Natural Gas AGR Units Percent on Vapor Recovery 12-3
Table 12-5: Natural Gas AGR Units Types of Vapor Recovery 12-3

Chapter 13 – Other Natural Gas Processing
Table 13-1: Emissions of Other Natural Gas Processing Units by Type 13-1
Table 13-2: Other Natural Gas Processing Units Percent on Vapor Recovery 13-2

Chapter 14 – Total Natural Gas Processing Emissions
Table 14-1: Total California Emissions (Metric Tons/Year) 14-1
Table 14-2: Natural Gas Processing Emissions by Type (Metric Tons/Year) 14-1

Chapter 15 – Natural Gas Compressors
Table 15-1: Number of Compressors by Type 15-1
Figure 15-1: Reciprocating Compressor 15-2
Figure 15-2: Centrifugal Compressor 15-2
Figure 15-3: Rotary Compressor 15-2
Table 15-2: Number of Primary Drivers by Type 15-3
Table 15-3: Number of Starters by Type 15-3
Table 15-4: Startup and Blowdown Volumes 15-3
Table 15-5: Natural Gas Compressor Startup Vented Emissions (Metric Tons/Year) 15-4
Table 15-6: Natural Gas Compressor Blowdown Vented Emissions 15-4
Table 15-7: Natural Gas Compressor Fugitive Seal Emissions (Metric Tons/Year) ... 15-4
Table 15-8: Total Emissions of Natural Gas Compressors (Metric Tons/Year) 15-5
Table 15-9: Compressor Emissions by Primary Business (Metric Tons/Year) 15-5
Table 15-10: Total Emissions of Natural Gas Compressors by Type 15-5
Table 15-11: Total Emissions of Natural Gas Compressors by Primary Driver 15-6
Table 15-12: Total Emissions of Natural Gas Compressors by Age 15-6
Table 15-13: Usage of Natural Gas Compressors by Age 15-7

Chapter 16 –Pipeline Pigging and Natural Gas Gathering Pipelines

Table 16-1: Miles of Natural Gas Gathering System Pipelines by Primary Business Type 16-1
Table 16-2: Natural Gas Gathering System Pipeline Maintenance Activity Volumes . 16-2
Table 16-3: Pigging Operations 16-2
Table 16-4: Natural Gas Vented Emissions from Gathering Pipeline Maintenance and Pigging Operations (Metric Tons/Year) 16-2
Table 16-5: Natural Gas Fugitive Emissions from Gathering Pipelines (Metric Tons/Year) 16-3

Chapter 17 – Separators

Table 17-1: Number of Separators by Primary Business Type 17-1
Table 17-2: Total Emissions of Separators (Metric Tons/Year) 17-2
Table 17-3: Fugitive Emissions of Separators by Type (Metric Tons/Year) 17-2
Table 17-4: Fugitive Emissions of Separators by Subtype (Metric Tons/Year) 17-3
Table 17-5: Separator Units by Type Percent on Vapor Recovery 17-3
Table 17-6: Separator Units by Subtype Percent with Vapor Recovery 17-4
Table 17-7: Separator Units by Types of Vapor Recovery 17-4

Chapter 18 – Crude Oil Sumps

Table 18-1: Fugitive Emissions of Sumps/Pits by Type (Metric Tons/Year) 18-1
Table 18-2: Fugitive Emissions of Sumps/Pits by Air District (Metric Tons/Year) 18-2
Table 18-3: Sumps/Pits by Percent on Vapor Recovery 18-2
Table 18-4: Sumps/Pits by Types of Vapor Recovery 18-3

Chapter 19 – Crude Oil Storage Tanks

Table 19-1: Total Emissions of Storage Tanks (Metric Tons/Year) 19-2
Table 19-2: Fugitive Emissions of Storage Tanks by Type (Metric Tons/Year) 19-2
Table 19-3: Fugitive Emissions of Storage Tanks by Subtype (Metric Tons/Year) 19-2
Table 19-4: Storage Tanks by Type Percent with Vapor Recovery 19-3
Table 19-5: Storage Tanks by Subtype Percent with Vapor Recovery 19-3
Table 19-6: Storage Tanks by Types of Vapor Recovery 19-3

Chapter 20 – Overview of California Emissions from Crude Oil Production, Processing, and Storage

Table 20-1: Crude Oil Emissions (Metric Tons/Year) 20-1
Table 20-2: Crude Oil Emissions by Primary Business Type (Metric Tons/Year) 20-1
Table 20-3: Crude Oil Total Emissions by CO_2e Range (Metric Tons/Year) 20-2
Table 20-4: Crude Oil Combustion Emissions by CO_2e Range 20-2
Table 20-5: Crude Oil Vented Emissions by CO_2e Range (Metric Tons/Year) 20-2
Table 20-6: Crude Oil Fugitive Emissions by CO_2e Range (Metric Tons/Year) 20-3
Table 20-7: Average Total CO_2e Emissions per Barrel Crude Oil Produced 20-4
Table 20-8: Average Combustion CO_2e Emissions per Barrel Crude Oil Produced ... 20-4
Table 20-9: Average Vented CO_2e Emissions per Barrel Crude Oil Produced 20-5
Table 20-10: Average Fugitive CO_2e Emissions per Barrel Crude Oil Produced 20-5

Chapter 21 – Overview of California Emissions from Dry Natural Gas Production, Processing, and Storage

Table 21-1: Natural Gas Emissions (Metric Tons/Year) 21-1
Table 21-2: Natural Gas Emissions by Primary Business Type (Metric Tons/Year)... 21-1
Table 21-3: Total Natural Gas Emissions by CO_2e Range (Metric Tons/Year) 21-2
Table 21-4: Natural Gas Combustion Emissions by CO_2e Range (Metric Tons/Year)21-2
Table 21-5: Natural Gas Vented Emissions by CO_2e Range (Metric Tons/Year)..... 21-2
Table 21-6: Natural Gas Fugitive Emissions by CO_2e Range (Metric Tons/Year)..... 21-2
Table 21-7: Average Total CO_2e Emissions per MSCF Natural Gas Produced 21-3
Table 21-8: Average Combustion CO_2e Emissions per MSCF Natural Gas 21-4
Table 21-9: Average Vented CO_2e Emissions per MSCF Natural Gas Produced..... 21-4
Table 21-10: Average Fugitive CO_2e Emissions per MSCF Natural Gas Produced... 21-4

Glossary

Term	Definition
AB 32	Assembly Bill 32, The California Global Warming Solutions Act of 2006 (Stats. 2006, ch. 488)
Active Wells	Wells that are producing crude oil or natural gas throughout the year
AGR Unit	Acid Gas Removal Unit. These units remove sulfur or CO_2 from natural gas streams.
Air District	An air pollution control district (APCD) or air quality management district (AQMD)
API Gravity	A scale used to reflect the specific gravity (SG) of a fluid such as crude oil, water, or natural gas. The API gravity is calculated as [(141.5/SG) - 131.5], where SG is the specific gravity of the fluid at 60℉
ARB	California Air Resources Board
Automated Control Device	A device that uses compressed gas or air to affect mechanical motion. Commonly referred to as pneumatic devices.
Automated Control Device Actuator	A device that accurately locates the valve plug in a position dictated by the control signal.
Automated Control Device Controller	Positions its movable part (a plug, ball or vane) relative to the stationary seat of the valve.
Board	California Air Resources Board
BTU	British Thermal Unit
CEC	California Energy Commission
CEIDARS	ARB's California Emission Inventory Development and Reporting System Database
Centrifugal Compressor	Centrifugal compressors increase the pressure of natural gas by centrifugal action, employing rotating movement of the drive shaft.

Term	Definition
CH_4	Methane
CHP	Combined Heat and Power
CIPA	California Independent Petroleum Association
CNG	Compressed natural gas
CO_2	Carbon dioxide
CO_2e	Carbon dioxide equivalents
Cogeneration	An integrated system that produces electric energy and useful thermal energy. Synonymous with combined heat and power.
Combined Cycle Turbine	A turbine that generates electricity and the waste heat of which is used to make steam. The steam is then used to generate electricity through a steam turbine or injected into a geological formation to increase production.
Combined Heat and Power	An integrated system that produces electric energy and useful thermal energy. Synonymous with cogeneration.
Combustion Emission	Greenhouse gas emission occurring during the exothermic reaction of a fuel with oxygen
Compressor	Any machine for raising the pressure of a natural gas stream by drawing in low pressure natural gas and discharging significantly higher pressure natural gas
Dehydrator	Equipment that removes water from a natural gas stream by passing it over glycol or a desiccant.
DOGGR	Department of Conservation's Division of Oil, Gas, and Geothermal Resources
Dry Gas	Natural gas produced from a gas well without associated crude oil
EIA	The US Department of Energy's Energy Information Administration
EOR	Enhanced oil recovery

Term	Definition
External Combustion Engine	An engine where an internal fluid is heated by an external heat source
FAR	IPCC Fourth Assessment Report
Four-Stroke Engine	An engine in which the piston completes four separate strokes, intake, compression, power, and exhaust, during two separate revolutions of the engine's crankshaft.
Fractionation	The process of separating natural gas liquids into their constituent liquid products.
Fugitive Emission	Unintentional release of greenhouse gas vapors to the atmosphere
Gas Injection EOR	The method of injecting a gas such as natural gas, nitrogen, or carbon dioxide into a geological formation to increase crude oil production
GHG	Greenhouse Gas
GWP	Global warming potential. Unitless measure of the radiative forcing of a particular compound relative to CO_2
H_2S	Hydrogen Sulfide
Heater/Treater	Oil/water separators that use heat to expedite the separation process
Heavy Crude	Crude oil with an API gravity of 10 to 20
HHV	Higher Heating Value
Hydraulic Fracturing	Well stimulation technique using high pressure pumps to increase fluid pressure at the bottom of a well. This fluid pressure cracks the formation and proppants such as sand or walnut hulls are injected into the newly formed crevices to keep them open when the fluid pressure is removed.
I&M Program	Inspection and Maintenance Program
Internal Combustion Engine	An engine where fuel is burned inside a combustion chamber. The expansion of the gas applies direct force to a component of

Term	Definition
	the engine such as a piston or turbine blade.
IOPA	Independent Oil Producers' Agency
IPCC	United Nation's Intergovernmental Panel on Climate Change
Lean Burn Engine	Engines that may operate up to the lean flame extinction limit, with exhaust oxygen levels of 12 percent or greater. The air to fuel ratios of lean-burn engines range from 20:1 to 50:1 and are typically higher than 24:1. The exhaust excess oxygen levels of lean-burn engines are typically around 8 percent, ranging from 4 to 17 percent.
Light Crude	Crude oil with an API gravity of 20 to 30
N_2O	Nitrous oxide
Natural Gas Gathering Pipelines	Small natural gas pipelines located on a production facility that route natural gas
PD	Protected data. In this survey report, data values that do not represent at least three companies.
PERP	Portable Equipment Registration Program
Pipeline Pig	A device sent down a pipeline to clean or inspect the pipeline.
Pits	Open pits that are used for oil/water separation or for emergency containment.
Production Facility	Facility that extracts crude oil and/or natural gas
Reboiler	Units that heat glycol to remove water, or heat amine to remove acid gas.
Reciprocating Compressor	Reciprocating compressors increase the pressure of natural gas by positive displacement, employing linear movement of a shaft driving a piston in a cylinder.
Rich Burn Engine	Engines that operate near the stoichiometric air-to-fuel ratio (16:1) with exhaust excess oxygen levels less than 4 percent (typically closer to 1 percent)
ROG	Reactive Organic Gas

Term	Definition
Rotary Compressor	Rotary compressors have blades or a cylinder that rotate off center to compress the natural gas. Synonymous with screw compressors.
SAR	IPCC Second Assessment Report
Screw Compressor	Screw compressors have blades or a cylinder that rotate off center to compress the natural gas. Synonymous with rotary compressors.
Separator	Separators split the fluids that come out of a well by gravity, heat, or both.
Simple Cycle Turbine	A turbine that generates electricity and does not utilize the waste heat.
Specific Gravity	The ratio of the density of a substance to the density of a reference substance. The reference substance is generally water.
Steam Generator	Equipment that produces steam using an external heat source
Sump	Open pit that is used for oil/water separation or for emergency containment.
TAR	IPCC Third Assessment Report
Thermal EOR	The method of injecting steam into a geological formation to increase crude oil production
TOG	Total Organic Gas
Turbine	An internal combustion engine where the force from the combustion chamber moves a blade rather than a piston.
Two-Stroke Engine	In a 2-stroke engine, the air-to-fuel charge is injected with the piston near the bottom of the power stroke. The intake ports are then covered or closed, and the piston moves to the top of the cylinder, compressing the charge. Following ignition and combustion, the power stroke starts with the downward movement of the piston. As the piston reaches the bottom of the power stroke, exhaust ports or valves are opened to exhaust, or scavenge, the combustion products, and a new air-to-fuel

Term	Definition
	charge is injected.
Ultra-Heavy Crude	Crude oil with an API gravity of less than 10
Ultra-Light Crude	Crude oil with an API gravity of greater than 30
US EPA	United States Environmental Protection Agency
Vapor Recovery	Equipment located at the source of potential gas emissions to the atmosphere that is used for collecting and routing the gas back into the process as a product and/or fuel or for destruction.
Vented Emission	Intentional release of greenhouse gas vapors to the atmosphere
Waterflood EOR	The method of injecting water into a geological formation to increase crude oil production.
Well Cellars	Lined or unlined pits around one or more wells that: (a) allow access to the wellhead components for servicing, or (b) contain intermittent flows of crude oil or water during an emergency or from drilling and petroleum production processes.
Well Cleanups	Well maintenance activities that include fracturing or removing fluids to increase production.
Well Completions	The final step to bringing a newly drilled well into production.
Well Workovers	The process of performing major maintenance or remedial treatments on an oil or gas well.
WSPA	Western States Petroleum Association

Executive Summary

On September 27, 2006, Governor Schwarzenegger signed Assembly Bill 32 (AB 32), the California Global Warming Solutions Act of 2006 (Núñez, Statutes of 2006, chapter 488). AB 32 establishes a comprehensive program of regulatory and market mechanisms to achieve real, cost-effective, quantifiable reductions of greenhouse gases (GHG). AB 32 charges the Air Resources Board (ARB) as the agency responsible for monitoring and regulating many GHG emission sources to reduce California's GHG emissions to 1990 levels by 2020.

Among the measures that the ARB staff is considering to help reach this AB 32 goal is a measure to reduce GHG emissions from upstream crude oil and natural gas production, processing, and storage operations. In order for staff to determine the potential GHG emission reductions, the technical feasibility, and the cost-effectiveness of any potential control measure, the ARB staff conducted a survey of the crude oil and natural gas industry to improve estimates of GHG emissions in California from these operations.

In February 2009, the 2007 Oil and Gas Industry Survey was mailed out to crude oil and natural gas production, processing, and storage facilities in California. The survey was completed by 325 companies representing over 1,600 facilities and approximately 97 percent of the 2007 crude oil and natural gas production in California.

Emissions were calculated using equipment information from the survey and commonly used emission equations and emission factors listed in Appendix B of this report. Total emissions for equipment covered under this survey are estimated to be 17.7 million metric tons of CO_2e. Combustion sources (equipment burning fuel for energy) account for 93 percent of the total CO_2e emissions. The remaining 7 percent of the CO_2e emissions, or about 1.3 million metric tons of CO_2e, come from vented and fugitive sources, which are intentional and unintentional releases of gases to the atmosphere, respectively.

In August 2011, staff released a draft of this report for public comment. Staff finalized this report in December 2011 based on the comments received, which resulted in the addition of a Glossary, minor text changes to improve clarity, and the inclusion of the survey cover letter and survey instructions in Appendix A.

While examining the data in detail at the equipment level as part of potential regulatory development, staff discovered several instances of equipment with unusually large emissions. Upon further review, staff determined these emissions were due to reporting errors, in some cases caused by instructions that were not applicable in specific instances. Staff worked with the survey respondents to correct these reporting errors. Staff recalculated the emissions which, in most cases, were lower. The affected equipment types were dehydrators, acid gas removal units, and other gas processing equipment.

This Revised Final Report contains these corrected emissions, as reflected in revised Chapters 3, 11, 12, 13, 14, 20, and 21. In addition, production and emissions data broken down by air district have been added to Chapters 2 and 3. Other minor text corrections discovered since December 2011 have also been made to this Revised Final Report.

Chapter 1 – Survey Development

Background

On September 27, 2006, Governor Schwarzenegger signed Assembly Bill 32 (AB 32), the California Global Warming Solutions Act of 2006 (Núñez, Statutes of 2006, chapter 488). This law required the reduction of greenhouse gas (GHG) emissions to 1990 levels by 2020.

AB 32 designated the California Air Resources Board (ARB or Board) as the lead agency for implementing AB 32 and mapped out major milestones for achieving this goal. ARB met the first milestones in 2007 by developing a list of discrete early action measures, assembling an inventory of historic emissions, establishing GHG reporting requirements, and setting the 2020 emissions limit.

In November 2007, ARB published the 1990 – 2004 California GHG inventory. The oil and gas production sector, as well as the natural gas transmission and distribution pipeline system, were identified as large sources of GHG emissions. In late 2007, a team of staff was assembled to evaluate potential reductions from these sectors.

Among the measures that the ARB staff is developing to help reach the AB 32 goal of reducing GHG emissions to 1990 levels by 2020 is one potential measure to reduce emissions from the crude oil and natural gas production, processing, and storage sector. This report provides the results of the 2007 survey of emissions from the crude oil and natural gas production, processing, and storage sector (2007 Oil and Gas Industry Survey).

Development of the 2007 Oil and Gas Industry Survey

In April 2008, ARB staff held a public workshop to discuss preliminary concepts for reducing greenhouse gases from the oil and gas production, transmission and distribution, and refinery sectors. Attendees were encouraged to sign up to be part of industry workgroups. After that workshop, the sector was split into three discrete sections: an oil and gas production section, a natural gas transmission and distribution section, and a refinery section.

Ultimately, the oil and gas production sector contained the following types of facilities:

- Crude oil extraction;
- Natural gas extraction;
- Natural gas storage;
- Crude oil processing not including refineries;
- Natural gas processing including gas plants;
- Crude oil pipelines; and
- Crude oil tank farms not including tank farms at refineries.

The natural gas transmission and distribution sector contained:

- Natural gas transmission pipelines;
- Natural gas distribution pipelines;
- Natural gas compressor stations; and
- Natural gas metering stations.

The refinery sector included only crude oil refineries.

In the months preceding the April 2008 public workshop, staff gathered available data from ARB's California Emission Inventory Development and Reporting System (CEIDARS) database, local air district permit data, and a small amount of individual company data. It was concluded that the quality and uniformity of the data were not robust enough to support regulation development. Staff then proposed surveying the sector to create a current baseline inventory.

To create a comprehensive survey that could be used to create a robust GHG emissions inventory for the oil and gas production sector, staff determined that research, industry and air district meetings, and site visits were necessary. To that end, staff spent the next 10 months educating themselves and developing a survey in cooperation with the industry, industry trade groups, and local air districts (Table 1-1).

Appendix A is a copy of the survey, and Appendix B lists the calculation methods and emission factors used to estimate emissions. Appendix C contains a more detailed version of Table 1-1.

Table 1-1: Site Visits and Meetings

Date	Action
April 2008	• Staff held public workshop. • Industry and district working groups created.
May 2008 to January 2009	• Staff met with the Western States Petroleum Association (WSPA), California Independent Petroleum Association (CIPA), Independent Oil Producers' Agency (IOPA), and air district staff. • Staff toured over twenty oil and gas facilities. • Staff developed a draft survey and worked with the industry and district working groups to revise. • Staff developed general instructions for completing the survey and electronic templates.
February 19, 2009	• ARB staff mailed out the Oil and Gas Industry Survey.
March 26, 2009	• Staff traveled to Bakersfield to conduct a training seminar for filling out the survey.
February to August 2009	• Survey responses were due on April 30, 2009. • Survey database was developed and surveys uploaded as

	they came in. • Staff answered questions from the industry about the survey. • Extensive follow-up with facilities that responded began after the April 30 due date. • By August, the majority of surveys were received. • Staff toured several oil and gas facilities.
September to December 2009	• Staffed contacted non-respondents to the survey. • Remaining surveys received and uploaded.
December 8, 2009	• Staff conducted a workshop detailing preliminary results from the survey.
January to March 2010	• Staff worked with industry to answer questions about facility emissions. • Staff checked data for quality and followed up with facilities.
March 18, 2010	• Survey data were frozen.
April to May 2010	• Staff developed survey data and emission summaries. • Staff worked with industry working group on emission summaries.
June 2010 to January 2011	• Draft survey report developed.
April 2011 to June 2011	• Draft survey report reviewed by district and industry working groups.
August 2011	• Draft survey report released for public comment.
December 2011	• Final survey report released.

The 2007 Oil and Gas Industry Survey

This report presents the results from the 2007 Oil and Gas Industry Survey conducted by ARB to estimate greenhouse gas emissions in California. This survey was a one-time collection of data intended to accurately quantify operations and processes needed to estimate greenhouse gas emissions. The survey pertained to all upstream crude oil and natural gas facilities regardless of the size of operation.

For the purpose of this survey, upstream crude oil and natural gas facilities include:

> Oil or Natural Gas Extraction Facilities: any facility that extracts crude oil, natural gas, or both crude oil and natural gas.
>
> Processing Facilities: any facility that processes crude oil or natural gas for use or distribution. This survey does not include refineries.
>
> Crude Oil Transmission Facilities: crude oil pipelines or crude oil bulk loading operations. This includes ship, truck, or rail car loading facilities.

Storage Facilities: any facility that stores crude oil or natural gas, including underground natural gas storage facilities. This survey excludes crude oil tank farms located on refinery premises.

Additional facilities or operations covered under this survey include:

Drilling or Workover Companies: any owner of drilling or workover rigs that performed well services on crude oil or natural gas facilities.

Cogeneration Plants/Combined Heat and Power: any facility that produced electricity and thermal energy for use at a crude oil extraction or storage facility.

Produced Water Disposal: any facility that stored produced water from crude oil or natural gas extraction or storage facilities.

Some companies considered the data provided in the survey to be trade secret and confidential. To address this concern, but still allow the publishing of survey results, ARB implemented the historical practice of concealing all data values that did not represent at least three companies, otherwise known as the “Three Company Rule.” In addition, this report contains summarized survey data, rather than lists of individual survey responses to further protect confidentiality. Every effort was made to reveal as much of the survey data as possible without compromising the “Three Company Rule.” However, instances did arise where it was necessary to conceal certain portions of the survey results. Throughout this report the term “Protected Data” (or PD) is used to reflect that compliance with the “Three Company Rule” could not be satisfied and the data were concealed to protect company confidentiality.

Chapter 2 – General Information

Survey Response

The 2007 Oil and Gas Industry Survey was sent out to 1,429 companies. ARB received over 750 surveys, representing 389 companies from our original mailing list. Of the remaining 1,040 companies, 960 names were removed due to the following reasons:

- The company was out of business,
- The company had merged or been bought by another, or
- The company was not in the crude oil or natural gas business.

The remaining 80 companies did not respond. Thus, there was an 83 percent response rate for relevant companies. The response rate is probably even greater assuming many of the 80 nonresponsive companies fall into one of the three removal categories above.

This report details the results of this equipment and process survey. The total number of companies that completed the survey was 325. This number is smaller than the 389 companies listed on our mailing list due to several companies being listed with multiple addresses.

In the tables that follow, it should be noted that the percentages reported may not add to 100 percent due to rounding and that percentages that round to less than one percent are shown as zero percent.

The unique nature of crude oil and natural gas extraction added complexity to assigning emissions to a company. Many companies have multiple fields, with multiple facilities. To accommodate this, ARB allowed the company to list a company name, a facility location, and a facility identification number (ID). The facility location was generally the field or lease name and the facility ID was generally an air district identification number. In both cases, the facility location and facility ID were defined by contiguous property boundaries. As a result, 325 companies representing 1,379 facility locations, and 1,632 facility IDs in 17 air districts across California completed the survey. For the remainder of this report, the term “facility” will be used for facility ID.

Table 1 of the 2007 Oil and Gas Industry Survey required companies to fill out general information about each facility and facility location. This included business type. Table 2-1 lists the number of facilities by business type. Because facilities were allowed to list multiple business types for one facility, the total number of facilities by business type is larger than the total number of facilities that completed the survey.

The business type “other” includes the following self-reported facility types:

- CNG compression and marketing
- Cogeneration

- Combined heat and power
- Electricity generation
- Portable heating
- Water disposal
- Vapor recovery services.

Table 2-1: Number of Facilities by Business Type

Type	Number
Onshore Crude	668
Offshore Crude	17
Onshore Natural Gas	786
Offshore Natural Gas	8
Natural Gas Storage	11
Natural Gas Processing	282
Crude Pipeline	111
Crude Storage	258
Crude Processing	92
PERP[1] Equipment Owner	60
Other	54
Totals:	**2,347**

1. PERP = Portable Equipment Registration Program

Throughout the remainder of this report, the term “primary business” will be used. This term is used to assign emissions for a particular facility to its primary business. Primary business type was assigned to each facility using the following list in this order:

- Onshore crude oil production
- Offshore crude oil production
- Onshore natural gas production
- Offshore natural gas production
- Natural gas storage facility
- Natural gas processing
- Crude oil pipeline
- Crude oil storage
- Crude oil processing
- PERP equipment owner
- Other

The above list shows the order in which a primary business was assigned to each facility. Thus, a facility listing the business types “onshore crude”, “natural gas processing”, and “crude storage” would have “onshore crude” designated as its primary business.

Table 2-2 shows the number of facilities by primary business type. Crude storage and crude processing were combined to protect confidential data.

Table 2-2: Number of Facilities by Primary Business Type

Type	Number
Onshore Crude Production	668
Offshore Crude Production	16
Onshore Natural Gas Production	703
Offshore Natural Gas Production	0
Natural Gas Storage	10
Natural Gas Processing	17
Crude Pipeline	65
Crude Processing and Storage	42
PERP Equipment Owner	58
Other	53
Totals:	**1,632**

California Production

Table 2 of the 2007 Oil and Gas Industry Survey required companies to fill out their production for each facility location. This table asked for the number of

- active wells,
- well cellars,
- new wells drilled,
- workovers that required tubing removal,
- well cleanups (also known as liquid unloading), and
- well completions.

The production type was also required. California crude oil production was reported by the American Petroleum Institute (API) gravity range. API gravity measures how heavy or light a petroleum product is compared to water. The lower the API gravity number, the heavier the petroleum product is compared to water. Thus, companies filled out the above list by type of production:

- dry gas production (referred to as Produced Natural Gas in the survey),
- natural gas storage,
- ultra-heavy (API < 10) crude oil production,
- heavy (API 10 - 20) crude oil production ,
- light (API 20 - 30) crude oil production, and
- ultra-light (API > 30) crude oil production.

Table 2 of the 2007 Oil and Gas Industry Survey also gathered production volume, the composition of the natural gas produced, the volume of crude oil transported, and the miles of crude oil pipeline.

Crude oil and natural gas extraction is a large industry in California. In 2007, California produced 243 million barrels of crude oil, making it the fourth largest producer of domestic crude oil (DOGGR, 2008; EIA, 2009b). This production accounts for 38 percent of the total crude oil delivered to California refineries. The other sources of

crude oil delivered to California refineries are 45 percent foreign, 16 percent Alaskan, and one percent from gulf coast states (CEC, 2010).

The 2007 Annual Report of the State Oil and Gas Supervisor stated that 58 percent of California's 2007 crude oil production was extracted through enhanced oil recovery (EOR) techniques (DOGGR, 2008). EOR techniques include thermal, waterflood, and gas injection. Thermal EOR injects steam into the formation, waterflood EOR injects water into the formation, and gas injection EOR injects natural gas, nitrogen, or carbon dioxide into the formation. Of the production that was recovered through EOR techniques, 68 percent used thermal, 27 percent used waterflood, and 5 percent used gas injection techniques (DOGGR, 2008).

The crude oil production reported under ARB's 2007 Oil and Gas Industry Survey represents 96 percent of California's total production. Table 2-3 lists the California crude oil production reported in the 2007 Oil and Gas Industry Survey by API range. Table 2-4 lists the California crude oil production by air district.

There were 882,953,716 barrels of crude oil transported through 6,799 miles of pipeline. This total includes California production and imported crude oil. The amount of crude oil transported through crude oil pipelines is greater than the 639,189,000 barrels delivered to refineries (CEC, 2010) because many crude oil extraction facilities listed crude oil transport from their facility to one of the major pipeline companies. Thus, some crude oil transport was counted twice.

Table 2-3: Crude Oil Totals

Type	Barrels Crude Oil Produced	Percent of Total Production Reported
Ultra-Heavy Oil (API <10)	614,683	0%
Heavy Oil (API 10 - 20)	156,304,520	67%
Light Oil (API 20 - 30)	61,524,698	26%
Ultra-Light Oil (API >30)	15,649,398	7%
Totals:	**234,093,299**	

Table 2-4: Crude Oil Totals by Air District

Air District	Ultra-Heavy Oil (API <10) (bbl)	Heavy Oil (API 10 - 20) (bbl)	Light Oil (API 20 - 30) (bbl)	Ultra-Light Oil (API >30) (bbl)
Bay Area AQMD	0	0	PD	0
Monterey Bay Unified APCD	0	3,561,595	PD	PD
Santa Barbara County APCD	PD	13,500,536	4,565,827	574,103
South Coast AQMD	0	19,027,656	10,143,280	977,986
San Joaquin Valley APCD	PD	117,483,089	44,194,051	13,516,247
San Luis Obispo County APCD	0	PD	0	PD
Ventura County APCD	0	2,190,819	2,603,320	576,597
Yolo/Solano AQMD	0	PD	0	0
Totals:	**614,683**	**156,304,520**	**61,524,698**	**15,649,398**

Natural gas production and natural gas storage have very similar processes. Natural gas production extracts virgin natural gas that is then processed and sold. Natural gas storage takes clean, processed gas from pipelines or large producers and injects it into a geological formation for storage. The gas is then removed at a later date when needed.

There are discrepancies between the amounts of natural gas produced that was reported to the Energy Information Administration (EIA), the Department of Conservation Division of Oil, Gas, and Geothermal (DOGGR), and the 2007 Oil and Gas Industry survey. According to the EIA Natural Gas 2007 Annual Report (EIA, 2009a), these discrepancies may be due to the way operators fill out their reports. The amount of natural gas extracted that was reported to EIA was 339 billion cubic feet (EIA, 2009a). This amount is larger than the 312 billion cubic feet reported to DOGGR (DOGGR, 2008). The amount reported in the 2007 Oil and Gas Industry survey is shown in Table 2-5 and is larger than both the EIA and DOGGR numbers. However, if the amount combusted onsite is subtracted from the amount produced, the amount available becomes similar to the EIA number. Table 2-6 shows the amount of natural gas reported by air district.

Table 2-5: Natural Gas Totals

Type	MSCF[1] Natural Gas Produced	MSCF Natural Gas Combusted	MSCF Natural Gas Available to Consumers
Associated Gas	291,115,743	54,444,514	236,671,230
Dry Gas	99,211,175	4,597,875	94,613,300
Totals:	**390,326,918**	**59,042,389**	**331,284,529**

1. MSCF is 1000 standard cubic feet

Table 2-6: Natural Gas Totals by Air District

Air District	MSCF Associated Gas Produced	MSCF Dry Gas Produced	MSCF Natural Gas Combusted	MSCF Natural Gas Available to Consumers
Bay Area AQMD	PD	5,064,381	131,967	PD
Butte County AQMD	0	PD	PD	PD
Colusa County APCD	0	9,131,772	288,237	8,843,534
Feather River AQMD	0	11,044,326	409,389	10,634,938
Glenn County APCD	0	8,052,603	309,101	7,743,502
Monterey Bay Unified APCD	PD	0	2,697	271,452
North Coast Unified AQMD	PD	0	14,498	95,002
Santa Barbara County APCD	40,161,649	PD	6,753,579	PD
South Coast AQMD	56,942,823	PD	9,160,810	PD
San Joaquin Valley APCD	185,644,665	20,895,394	38,195,104	168,344,955
San Luis Obispo County APCD	PD	0	103,047	2,339,153
Sacramento Metro AQMD	0	15,784,466	1,291,556	14,492,910
Tehama County APCD	0	7,818,949	179,094	7,639,855
Ventura County APCD	4,980,163	PD	1,168,313	PD
Yolo/Solano AQMD	PD	17,254,359	1,031,913	16,751,007
Totals:	**291,115,743**	**99,211,175**	**59,042,389**	**331,284,529**

In 2007, 2,326 billion cubic feet of natural gas were delivered to California consumers (EIA, 2009a). This includes gas used in residential, commercial, and industrial

applications; vehicular fuel; and electric power generation. According to the 2007 Oil and Gas Industry survey, California produced 14 percent of the total natural gas used in state. The remaining 86 percent came in through interstate transmission pipelines crossing the border at Arizona, Nevada, and Oregon (EIA, 2009a).

California withdrew 211 billion cubic feet of gas from natural gas storage facilities in 2007. The storage numbers include in-state production and imported natural gas.

Global Warming Potentials

The 2007 Oil and Gas Industry Survey collected comprehensive equipment and process data for the California crude oil and natural gas industry. The data from the survey are used to calculate greenhouse gas (GHG) emissions. The major GHG compounds emitted from this sector are carbon dioxide (CO_2), methane (CH_4), and nitrous oxide (N_2O). Carbon dioxide equivalents (CO_2e) are calculated by multiplying the mass of the GHG compound by its global warming potential (GWP). GWP numbers are the amount of radiative forcing a particular compound has compared to CO_2. GWP numbers are published by the Intergovernmental Panel on Climate Change (IPCC) in their Assessment Reports. Table 2-5 lists the GWP for CO_2, CH_4, and N_2O from the Second, Third, and Fourth IPCC Assessment Reports (IPCC 2007, 2001, and 1995).

Table 2-7: Global Warming Potentials

	CO_2	CH_4	N_2O
Second Assessment Report (SAR)	1	21	310
Third Assessment Report (TAR)	1	23	296
Fourth Assessment Report (FAR)	1	25	298

ARB's and US EPA's Mandatory GHG Reporting rules both use the SAR to calculate emissions. To remain consistent with both of these programs, all the CO_2e calculations in this report use the SAR GWP numbers.

Chapter 3 of this report gives an overview of the total emissions calculated from the 2007 Oil and Gas Industry Survey. Chapters 4 through 19 go through the emissions calculated from each table of the survey. The remaining chapters of the report total the emissions for oil production and natural gas production separately.

References

CEC (2010). California Energy Commission. Oil Supply Sources to California Refineries. http://www.energyalmanac.ca.gov/petroleum/statistics/crude_oil_receipts.html. July 2010.

DOGGR (2008). California Department of Conservation Division of Oil, Gas, and Geothermal Resources. 2007 Annual Report of the State Oil and Gas Supervisor. 2008.

EIA (2009a). U.S. Energy Information Administration. Natural Gas Annual 2007. January 2009.

EIA (2009b). U.S. Energy Information Administration. U.S. Crude Oil, Natural Gas, and Natural Gas Liquids Reserves 2007 Annual Report. February 2009.

IPCC (2007). Solomon, S., D. Qin, M. Manning, Z. Chen, M. Marquis, K.B. Averyt, M. Tignor and H.L. Miller (eds.). Contribution of Working Group I to the Fourth Assessment Report of the Intergovernmental Panel on Climate Change. Cambridge University Press, Cambridge, United Kingdom and New York, NY, USA. 2007.

IPCC (2001). Houghton, J.T., Y. Ding, D.J. Griggs, M. Noguer, P.J. van der Linden, X. Dai, K. Maskell, C.A. Johnson (eds.). Contribution of Working Group I to the Third Assessment Report of the Intergovernmental Panel on Climate Change. Cambridge University Press, Cambridge, United Kingdom and New York, NY, USA. 2001.

IPCC (1995). Houghton, J.T., L.G. Meira Filho, B.A. Callander, N. Harris, A. Kattenberg and K. Maskell (eds.). Contribution of Working Group I to the Second Assessment Report of the Intergovernmental Panel on Climate Change. Cambridge University Press, Cambridge, United Kingdom and New York, NY, USA. 1995.

Chapter 3 – Overview of Total California Emissions

Total Emissions

This chapter combines the emissions from all equipment surveyed in the 2007 Oil and Gas Industry Survey. These emissions do not include extrapolated emissions for equipment not covered by the survey. The emissions were calculated using equipment information from the survey and the emission equations and emissions factors listed in Appendix B. Table 3-1 shows the total California statewide emissions for the crude oil and natural gas sector for the equipment covered by the survey in 2007. Combustion sources are equipment burning fuel for energy. Vented emissions are intentional releases of vapors to the atmosphere. Fugitive emissions are unintentional releases of vapors to the atmosphere. The majority of the total CO_2e emissions in California are from combustion sources. Only 7 percent of the CO_2e emissions come from vented or fugitive sources.

Table 3-1: Total California 2007 Emissions (Metric Tons/Year)

Type	CO_2	CH_4	N_2O	CO_2e	Percent of Total CO_2e
Combustion	16,073,395	10,836	314	16,398,268	93%
Vented	56,021	16,026	0	392,563	2%
Fugitive	107,322	37,533	0	895,513	5%
Totals:	**16,236,738**	**64,394**	**314**	**17,686,345**	

Table 3-2 lists total CO_2e emissions by primary business type. Primary business type is defined in Chapter 2. The business type “other” includes the following self-reported facility types:

- CNG compression and marketing
- Cogeneration
- Combined heat and power
- Electricity generation
- Portable heating
- Water disposal
- Vapor recovery services

The facility types “crude processing” and “crude storage” were combined to protect confidential company data. The facility types “onshore crude production” and “other” account for 42 percent of the total number of facilities for this sector. However, they emit 84 percent of the total CO_2e for the state. The remaining 58 percent of the facilities account for only 16 percent of the emissions.

Table 3-2: Total California Emissions by Primary Business Type (Metric Tons/Year)

Type	Number of Facilities	CO_2	CH_4	N_2O	CO_2e	Percent of Total CO_2e
Onshore Crude Production	668	9,645,891	30,568	178	10,343,089	58%
Other	53	4,579,097	567	108	4,624,612	26%
Natural Gas Processing	17	913,595	6,090	6	1,043,400	6%
Onshore Natural Gas Production	703	205,336	16,247	4	547,624	3%
Crude Processing and Storage	42	370,666	1,719	2	407,239	2%
Natural Gas Storage	10	200,638	6,263	9	334,864	2%
PERP Equipment Owner	58	148,082	339	1	155,577	1%
Offshore Crude Production	16	101,807	1,772	4	140,118	1%
Crude Pipeline	65	71,625	829	3	89,821	1%
Totals:	**1,632**	**16,236,738**	**64,394**	**314**	**17,686,345**	

Table 3-3 lists the combustion, vented, fugitive, and total CO_2e emissions by primary business type. The facility types “crude processing” and “crude storage” were combined to protect confidential company data.

Table 3-3: Total California Combustion, Vented, and Fugitive Emissions by Primary Business Type (Metric Tons/Year)

Type	Number of Facilities	Combustion (CO_2e)	Vented (CO_2e)	Fugitive (CO_2e)	Total CO_2e	Percent of Total CO_2e
Onshore Crude Production	668	9,784,578	125,428	433,082	10,343,089	58%
Other	53	4,616,047	53	8,512	4,624,612	26%
Natural Gas Processing	17	879,601	24,102	139,698	1,043,400	6%
Onshore Natural Gas Production	703	218,910	117,835	210,879	547,624	3%
Crude Processing and Storage	42	346,952	15,940	44,347	407,239	2%
Natural Gas Storage	10	226,569	90,537	17,758	334,864	2%
PERP Equipment Owner	58	148,825	1,960	4,793	155,577	1%
Offshore Crude Production	16	104,272	16,708	19,138	140,118	1%
Crude Pipeline	65	72,515	0	17,306	89,821	1%
Totals:	**1,632**	**16,398,268**	**392,563**	**895,513**	**17,686,345**	

Total Emissions by Air District

Crude oil and natural gas operations are found in 17 air pollution control districts (APCD) and air quality management districts (AQMD) in California. Total CO_2e emissions for each air district are shown in Table 3-4. Several companies had a facility that was located in more than one air district. In those cases, the CO_2e emissions for that facility were split equally between each air district. This resulted in the total number of facilities being larger than the 1,632 facilities that reported in the survey. Nearly 80 percent of the statewide total CO_2e emissions for these operations occur in the San Joaquin Valley APCD.

Table 3-4: Total California Emissions by Air District (Metric Tons/Year)

Air District	Number of Facilities	CO_2	CH_4	N_2O	CO_2e	Percent of Total CO_2e
San Joaquin Valley APCD	456	13,289,187	30,588	240	14,005,872	79%
South Coast AQMD	265	1,045,442	6,773	57	1,205,313	7%
Santa Barbara County APCD	63	890,593	7,458	5	1,048,824	6%
Monterey Bay Unified APCD	19	494,994	130	2	498,249	3%
Ventura County APCD	83	226,188	1,760	5	264,804	1%
Sacramento Metro AQMD	155	71,031	2,933	1	133,043	1%
Yolo/Solano AQMD	200	57,023	2,339	1	106,509	1%
Glenn County APCD	79	16,989	3,549	0	91,584	1%
Feather River AQMD	69	21,108	3,063	0	85,569	0%
San Luis Obispo County APCD	4	63,653	44	1	64,785	0%
Bay Area AQMD	68	19,247	2,090	0	63,292	0%
Colusa County APCD	119	15,780	2,208	0	62,195	0%
Tehama County APCD	47	9,753	853	0	27,684	0%
Butte County AQMD	PD	PD	PD	PD	PD	PD
North Coast Unified AQMD	PD	PD	PD	PD	PD	PD
No District Reported	4	803	0	0	806	0%
San Diego County APCD	PD	PD	PD	PD	PD	PD
Totals:	**1,637**	**16,236,738**	**64,394**	**314**	**17,686,345**	

Table 3-5 lists the combustion, vented, fugitive, and total CO_2e emissions by air district.

Table 3-5: Total California Combustion, Vented, and Fugitive Emissions by Air District (Metric Tons/Year)

Air District	Number of Facilities	Combustion (CO_2e)	Vented (CO_2e)	Fugitive (CO_2e)	Total CO_2e	Percent of Total CO_2e
San Joaquin Valley APCD	456	13,462,679	121,826	421,367	14,005,872	79%
South Coast AQMD	265	1,077,660	36,196	91,458	1,205,313	7%
Santa Barbara County APCD	63	852,823	81,107	114,894	1,048,824	6%
Monterey Bay Unified APCD	19	495,724	437	2,088	498,249	3%
Ventura County APCD	83	199,615	27,561	37,628	264,804	1%
Sacramento Metro AQMD	155	76,125	22,993	33,925	133,043	1%
Yolo/Solano AQMD	200	61,484	15,655	29,370	106,509	1%
Glenn County APCD	79	17,905	29,372	44,307	91,584	1%
Feather River AQMD	69	22,627	24,543	38,400	85,569	0%
San Luis Obispo County APCD	4	63,946	0	838	64,785	0%
Bay Area AQMD	68	22,505	8,293	32,494	63,292	0%
Colusa County APCD	119	16,430	14,199	31,566	62,195	0%
Tehama County APCD	47	9,781	5,546	12,356	27,684	0%
Butte County AQMD	PD	PD	PD	PD	PD	PD
North Coast Unified AQMD	PD	PD	PD	PD	PD	PD
No District Reported	4	805	0	0	806	0%
San Diego County APCD	PD	PD	PD	PD	PD	PD
Totals:	**1,637**	**16,398,268**	**392,563**	**895,513**	**17,686,345**	

Total Emissions by Combustion, Vented, and Fugitive Sources

Table 3-6 lists the total combustion emissions by source type. The majority of the CO_2e emissions are from steam generators, combined heat and power units, and turbines.

Table 3-6: Combustion Emissions by Combustion Type (Metric Tons/Year)

Type	CO_2	CH_4	N_2O	CO_2e	Percent of Total CO_2e
Steam Generator	6,658,156	2,973	115	6,756,167	41%
Combined Heat and Power	3,568,017	612	7	3,583,006	22%
Turbine	2,731,036	835	153	2,796,035	17%
Internal Combustion Engine	1,004,624	4,537	16	1,104,754	7%
Cogeneration	930,377	15	2	931,185	6%
Flare	242,454	812	0	259,623	2%
Microturbine	232,240	581	17	249,584	2%
Thermal Oxidizer	216,378	80	0	218,155	1%
Boiler	140,240	245	0	145,454	1%
Heater	116,301	34	2	117,584	1%
Heater/Treater	115,607	47	2	117,226	1%
Incinerator	44,846	49	0	45,896	0%
Drill Rig	31,600	1	0	31,708	0%
Reboiler	17,466	15	0	17,782	0%
Workover Rig	13,300	1	0	13,345	0%
Vapor Recovery	10,681	0	0	10,690	0%
Other	72	0	0	73	0%
Totals:	**16,073,395**	**10,836**	**314**	**16,398,268**	

Table 3-7 lists the total combustion emissions by primary business type. The primary business type “crude processing” and “crude storage” were combined to protect confidential company data. Table 3-7 shows that 88 percent of the emissions are from onshore crude production and the business type “other.”

Table 3-7: Combustion Emissions by Primary Business (Metric Tons/Year)

Type	CO_2	CH_4	N_2O	CO_2e	Percent of Total CO_2e
Onshore Crude Production	9,601,843	6,069	178	9,784,578	60%
Other	4,579,058	161	108	4,616,047	28%
Natural Gas Processing	832,060	2,173	6	879,601	5%
Crude Processing and Storage	334,290	580	2	346,952	2%
Natural Gas Storage	200,225	1,126	9	226,569	1%
Onshore Natural Gas Production	204,801	620	4	218,910	1%
PERP Equipment Owner	148,048	19	1	148,825	1%
Offshore Crude	101,521	78	4	104,272	1%
Crude Pipeline	71,548	9	3	72,515	0%
Totals:	**16,073,395**	**10,836**	**314**	**16,398,268**	

Table 3-8 lists the total combustion emissions by air district. Several companies had a facility that was located in more than one air district. Table 3-8 shows that 82 percent of the emissions are from the San Joaquin Valley APCD.

Table 3-8: Combustion Emissions by Air District (Metric Tons/Year)

Air District	CO_2	CH_4	N_2O	CO_2e	Percent of Total CO_2e
San Joaquin Valley APCD	13,242,316	6,953	240	13,462,679	82%
South Coast AQMD	1,027,580	1,544	57	1,077,660	7%
Santa Barbara County APCD	829,037	1,056	5	852,823	5%
Monterey Bay Unified APCD	494,952	12	2	495,724	3%
Ventura County APCD	189,880	385	5	199,615	1%
Sacramento Metro AQMD	70,842	232	1	76,125	0%
San Luis Obispo County APCD	PD	PD	PD	PD	PD
Yolo/Solano AQMD	56,901	201	1	61,484	0%
Feather River AQMD	21,050	69	0	22,627	0%
Bay Area AQMD	19,132	153	0	22,505	0%
Glenn County APCD	16,933	43	0	17,905	0%
Butte County AQMD	PD	PD	PD	PD	PD
Colusa County APCD	15,746	30	0	16,430	0%
Tehama County APCD	9,729	2	0	9,781	0%
North Coast Unified AQMD	PD	PD	PD	PD	PD
No District Reported	803	0	0	805	0%
Totals:	**16,073,395**	**10,836**	**314**	**16,398,268**	

Table 3-9 lists the total vented emissions by source type. The type “natural gas gathering pipelines” only includes the venting from maintenance activities. These pipelines do not include natural gas transmission and distribution pipelines. Automated control devices and compressor blowdowns account for 48 percent of the total vented emissions in California.

Table 3-9: Vented Emissions by Source Type (Metric Tons/Year)

Type	CO_2	CH_4	CO_2e	Percent of Total CO_2e
Automated Control Devices	161	5,727	120,434	31%
Compressor Blowdowns	172	3,238	68,165	17%
Natural Gas Gathering Pipelines	2,659	2,490	54,940	14%
Sweetening/Acid Gas Removal	51,749	19	52,148	13%
Well Workovers	645	2,116	45,085	11%
Dehydrators	308	1,975	41,774	11%
Well Cleanups	219	327	7,082	2%
Compressor Startups	4	69	1,462	0%
Carbon Adsorbers	0	54	1,131	0%
Natural Gas Gathering Pipeline Pigging	104	5	211	0%
Storage Tank Degassing	0	5	109	0%
Separator Degassing	0	1	24	0%
New Wells Drilled	0	0	0	0%
Totals:	**56,021**	**16,026**	**392,563**	

Table 3-10 lists the total vented emissions by primary business type. The primary business type “crude processing” and “crude storage” were combined to protect confidential company data. Table 3-10 shows that 85 percent of the total vented emissions in California are from the primary business types “onshore crude production”, “onshore natural gas production”, and “natural gas storage”.

Table 3-10: Vented Emissions by Primary Business Type (Metric Tons/Year)

Type	CO_2	CH_4	CO_2e	Percent of Total CO_2e
Onshore Crude Production	18,897	5,073	125,428	32%
Onshore Natural Gas Production	127	5,605	117,835	30%
Natural Gas Storage	384	4,293	90,537	23%
Natural Gas Processing	20,649	164	24,102	6%
Offshore Crude Production	84	792	16,708	4%
Crude Processing and Storage	15,867	4	15,940	4%
PERP Equipment Owner	10	93	1,960	0%
Other	2	2	53	0%
Crude Pipeline	0	0	0	0%
Totals:	**56,021**	**16,026**	**392,563**	

Table 3-11 lists the total vented emissions by air district. San Joaquin Valley APCD and Santa Barbara County APCD account for 52 percent of the total vented emissions in California.

Table 3-11: Vented Emissions by Air District (Metric Tons/Year)

Air District	CO_2	CH_4	CO_2e	Percent of Total CO_2e
San Joaquin Valley APCD	5,225	5,552	121,826	31%
Santa Barbara County APCD	19,276	2,944	81,107	21%
South Coast AQMD	6,307	1,423	36,196	9%
Glenn County APCD	18	1,398	29,372	7%
Ventura County APCD	25,074	118	27,561	7%
Feather River AQMD	11	1,168	24,543	6%
Sacramento Metro AQMD	46	1,093	22,993	6%
Yolo/Solano AQMD	27	744	15,655	4%
Colusa County APCD	7	676	14,199	4%
Bay Area AQMD	13	394	8,293	2%
Tehama County APCD	2	264	5,546	1%
Butte County AQMD	PD	PD	PD	PD
Monterey Bay Unified APCD	6	21	437	0%
North Coast Unified AQMD	PD	PD	PD	PD
San Diego County APCD	PD	PD	PD	PD
Totals:	**56,021**	**16,026**	**392,563**	

Table 3-12 lists the total fugitive emissions by source type. The type “natural gas gathering pipeline” only includes the fugitive emissions from the gathering system pipelines. These pipelines do not include natural gas transmission and distribution pipelines. Compressor seals and storage tanks account for 69 percent of the total fugitive emissions in California that are covered by this survey.

Table 3-12: Fugitive Emissions by Source Type (Metric Tons/Year)

Type	CO_2	CH_4	CO_2e	Percent of Total CO_2e
Compressor Seals	2,025	17,679	373,274	42%
Storage Tanks	1,084	11,501	242,594	27%
Sweetening/Acid Gas Removal	61,605	576	73,694	8%
Well Cellars	0	2,154	45,225	5%
Wellheads	559	2,032	43,228	5%
Dehydrators	16,567	1,252	42,866	5%
Other Natural Gas Processing	24,888	228	29,676	3%
Natural Gas Gathering Pipelines	327	867	18,541	2%
Components	256	811	17,283	2%
Sumps	0	264	5,552	1%
Separators	11	170	3,578	0%
Totals:	**107,322**	**37,533**	**895,513**	

Table 3-13 lists the total fugitive emissions by primary business type. The primary business type “crude processing” and “crude storage” were combined to protect confidential company data. This table shows that the primary business types “onshore crude production”, “onshore natural gas production” and “natural gas processing” account for 88 percent of the total fugitive emissions.

Table 3-13: Fugitive Emissions by Primary Business Type (Metric Tons/Year)

Type	CO_2	CH_4	CO_2e	Percent of Total CO_2e
Onshore Crude Production	25,151	19,425	433,082	48%
Onshore Natural Gas Production	408	10,022	210,879	24%
Natural Gas Processing	60,886	3,753	139,698	16%
Crude Processing and Storage	20,509	1,135	44,347	5%
Offshore Crude Production	202	902	19,138	2%
Natural Gas Storage	29	844	17,758	2%
Crude Pipeline	77	820	17,306	2%
Other	37	404	8,512	1%
PERP Equipment Owner	24	227	4,793	1%
Totals:	**107,322**	**37,533**	**895,513**	

Table 3-14 lists the total fugitive emissions by air district. San Joaquin Valley APCD, Santa Barbara County APCD, and South Coast AQMD account for 70 percent of the total fugitive emissions in California.

Table 3-14: Fugitive Emissions by Air District (Metric Tons/Year)

Air District	CO_2	CH_4	CO_2e	Percent of Total CO_2e
San Joaquin Valley APCD	41,645	18,082	421,367	47%
Santa Barbara County APCD	42,280	3,458	114,894	13%
South Coast AQMD	11,554	3,805	91,458	10%
Glenn County APCD	39	2,108	44,307	5%
Feather River AQMD	47	1,826	38,400	4%
Ventura County APCD	11,234	1,257	37,628	4%
Sacramento Metro AQMD	143	1,609	33,925	4%
Bay Area AQMD	102	1,542	32,494	4%
Colusa County APCD	27	1,502	31,566	4%
Yolo/Solano AQMD	95	1,394	29,370	3%
Tehama County APCD	22	587	12,356	1%
Butte County AQMD	PD	PD	PD	PD
Monterey Bay Unified APCD	36	98	2,088	0%
North Coast Unified AQMD	PD	PD	PD	PD
San Luis Obispo County APCD	4	83	36	0%
San Diego County APCD	PD	PD	PD	PD
No District Reported	PD	PD	PD	PD
Totals:	**107,322**	**37,533**	**895,513**	

Total Emissions by CO_2e Range

Total CO_2e emissions were calculated for each facility. All facilities were then categorized into ranges of CO_2e emissions. Table 3-15 lists the number of facilities in each range and the total CO_2e emissions for all the facilities in that range. Ninety-four percent of the facilities in this sector account for only 6 percent of the total emissions while 2 percent of the facilities account for over 80 percent of the emissions.

Table 3-15: Total California Emissions by CO_2e Range (Metric Tons/Year)

Range (CO_2e per Facility)	Number of Facilities	CO_2e	Percent of Total CO_2e
< 10,000	1,537	983,552	6%
10,000 to 25,000	28	451,872	3%
25,000 to 50,000	19	679,163	4%
50,000 to 100,000	12	815,119	5%
100,000 to 500,000	27	5,122,394	29%
> 500,000	9	9,634,245	54%
Totals:	**1,632**	**17,686,345**	

Tables 3-16, 3-17, and 3-18 list the number of facilities and total CO_2e emissions for combustion, vented, and fugitive sources. These tables mirror Table 19-11 in that the majority of the emissions come from a small fraction of the total number of facilities.

Table 3-16: Total California Combustion Emissions by CO_2e Range (Metric Tons/Year)

Range (CO_2e per Facility)	Number of Facilities	CO_2e	Percent of Total CO_2e
< 10,000	1,549	544,783	3%
10,000 to 25,000	25	398,589	2%
25,000 to 50,000	17	629,251	4%
50,000 to 100,000	7	547,906	3%
100,000 to 500,000	25	4,743,074	29%
> 500,000	9	9,534,666	58%
Totals:	**1,632**	**16,398,268**	

Table 3-17: Total California Vented Emissions by CO_2e Range (Metric Tons/Year)

Range (CO_2e per Facility)	Number of Facilities	CO_2e	Percent of Total CO_2e
<1,000	1,587	101,692	26%
1,000 to 5,000	34	68,841	18%
5,000 to 10,000	PD	PD	PD
10,000 to 25,000	6	102,455	26%
> 25,000	PD	PD	PD
Totals:	**1,632**	**392,563**	

Table 3-18: Total California Fugitive Emissions by CO_2e Range (Metric Tons/Year)

Range (CO_2e per Facility)	Number of Facilities	CO_2e	Percent of Total CO_2e
< 1,000	1,505	204,824	23%
1,000 to 5,000	105	192,512	21%
5,000 to 10,000	10	73,867	8%
10,000 to 25,000	7	105,589	12%
> 25,000	5	318,720	36%
Totals:	**1,632**	**895,513**	

Chapter 4 – Wells

Wells are essential to extracting crude oil and natural gas from geological formations. These wells have emissions from the site of the well as well as from maintenance activities. Table 2 of the 2007 Oil and Gas Industry Survey required companies to fill out the number of

- active wells,
- well cellars,
- new wells drilled,
- workovers that required tubing removal,
- well cleanups (also known as liquid unloading), and
- well completions.

Active wells are wells that are producing crude oil or natural gas throughout the year. Well cellars are lined or unlined pits around one or more wells that: (a) allow access to the wellhead components for servicing, or (b) contain intermittent flows of crude oil or water during an emergency or from drilling and petroleum production processes.

Well completions are the final step to bringing a newly drilled well on to production. In some cases, a new well will be completed in a different reporting period than when the well was drilled. Thus, the number of well completions for crude oil in 2007 is larger than the number of wells drilled in that same year.

Well workovers are the process of performing major maintenance or remedial treatments on an oil or gas well. This can be done with the production tubing remaining in place or being removed. The number of well workovers listed in Tables 4-3 and 4-4 only include workovers that required tubing removal.

Well cleanups are well maintenance activities that included hydraulic fracturing or removing fluids to increase production. Hydraulic fracturing uses high pressure pumps to increase fluid pressure at the bottom of the well. This fluid pressure cracks the formation and proppants such as sand or walnut hulls are injected into the newly formed crevices to keep them open when the fluid pressure is removed. This increases the flow of the crude oil or natural gas. Fluid removal is a natural gas well maintenance activity that removes built up fluids from the well to increase natural gas production.

Table 4-1 lists the number of crude oil active wells and well cellars by API range. Table 4-2 lists the number of active wells and well cellars for natural gas.

Table 4-1: Number of Crude Oil Active Wells and Well Cellars by API Range

Type	Number of Active Wells	Number of Well Cellars
Ultra-Heavy Oil (API <10)	47	22
Heavy Oil (API 10 - 20)	36,619	7,461
Light Oil (API 20 - 30)	14,261	4,998
Ultra-Light Oil (API >30)	1,323	2,168
Totals:	**52,250**	**14,649**

Table 4-2: Number of Natural Gas Active Wells and Well Cellars

Type	Number of Active Wells	Number of Well Cellars
Dry Gas	1,397	491
Natural Gas Storage	372	337
Totals:	**1,769**	**828**

Table 4-3 lists the number of new wells drilled, well completions, well workovers, and well cleanups reported in the survey by API range. Table 4-4 lists the number of new wells drilled, well completions, well workovers, and well cleanups for natural gas.

Table 4-3: Number of Crude Oil New Wells Drilled, Well Completions, Well Workovers and Well Cleanups by API Range

Type	Number of New Wells Drilled	Number of Well Completions	Number of Well Workovers	Number of Well Cleanups
Ultra-Heavy Oil (API <10)	0	0	0	0
Heavy Oil (API 10 - 20)	1,197	1,399	12,889	956
Light Oil (API 20 - 30)	763	732	5,424	1,977
Ultra-Light Oil (API >30)	175	187	599	187
Totals:	**2,135**	**2,318**	**18,912**	**3,120**

Table 4-4: Number of Natural Gas New Wells Drilled, Well Completions, Well Workovers, and Well Cleanups

Type	Number of New Wells Drilled	Number of Well Completions	Number of Well Workovers	Number of Well Cleanups
Dry Gas	162	142	304	86
Natural Gas Storage	PD	PD	PD	PD
Totals:	**PD**	**PD**	**PD**	**PD**

Emissions

Emissions for wells and their maintenance activities are detailed in this section. Emissions from active wells and well cellars are categorized as fugitive emissions. Fugitive emissions are unintentional emission leaks. Emissions from well workovers and well cleanups are vented emissions. Vented emissions are intentional emission leaks. All CO_2 and CH_4 values are multiplied by their corresponding GWP (1 for CO_2 and 21 for CH_4) to get the CO_2e number.

Active Wells

The emissions of CO_2 and CH_4 are calculated using emission factors multiplied by the number of active wells. The calculations and emission factors are detailed in Appendix B.

Table 4-5 lists the number of wells and the calculated emissions by API range. Table 4-6 lists the number of wells and calculated emissions for natural gas. In 2007, there were 59,856 wells producing crude oil and 1,540 active dry gas wells (DOGGR, 2008). Thus, 87 percent of the actively producing crude oil wells and 91 percent of the actively producing dry gas wells in California were reported in the survey.

Table 4-5: Emissions of Crude Oil Wells by API Range (Metric Tons/Year)

Type	Number of Active Wells	CO_2	CH_4	CO_2e	Percent of Total CO_2e
Ultra-Heavy Oil (API <10)	47	0	0	4	0%
Heavy Oil (API 10 - 20)	36,619	66	155	3,327	9%
Light Oil (API 20 - 30)	14,261	459	1,415	30,163	83%
Ultra-Light Oil (API >30)	1,323	19	139	2,932	8%
Totals:	**52,250**	**543**	**1,709**	**36,427**	

Table 4-6: Emissions of Natural Gas Wells (Metric Tons/Year)

Type	Number of Active Wells	CO_2	CH_4	CO_2e	Percent of Total CO_2e
Dry Gas	1,397	14	253	5,321	78%
Natural Gas Storage	372	1	70	1,479	22%
Totals:	**1,769**	**16**	**323**	**6,801**	

Well Cellars

The emissions of CO_2 and CH_4 are calculated using emission factors multiplied by the number of well cellars. The calculations and emission factors are detailed in Appendix B.

Table 4-7 lists the number of well cellars and their emissions by crude oil API. Emission factors for natural gas well cellars do not exist at this time.

Table 4-7: Emissions of Crude Oil Well Cellars by API Range (Metric Tons/Year)

Type	Number of Well Cellars	CH_4	CO_2e	Percent of Total CO_2e
Ultra-Heavy Oil (API <10)	22	3	58	0%
Heavy Oil (API 10 - 20)	7,461	933	19,585	43%
Light Oil (API 20 - 30)	4,998	850	17,843	39%
Ultra-Light Oil (API >30)	2,168	369	7,740	17%
Totals:	**14,649**	**2,154**	**45,225**	

Drilling and Maintenance

GHG emissions can be calculated from well drilling and maintenance activities. At this time, there are emission calculations for CO_2 and CH_4 emissions from well workovers and cleanups but not for new wells drilled and well completions. The emissions are calculated using the number of workovers or cleanups, the percent CO_2 and CH_4 in the associated or dry gas, and emission factors. These calculations are detailed in Appendix B.

Tables 4-8 through 4-11 list the calculated emissions for well workovers and well cleanups. As these tables show, well workovers account for the majority of the CO_2e emissions from well maintenance activities.

Table 4-8: Emissions of Crude Oil Well Workovers by API Range (Metric Tons/Year)

Type	Number of Well Workovers	CO_2	CH_4	CO_2e	Percent of Total CO_2e
Ultra-Heavy Oil (API <10)	0	0	0	0	0%
Heavy Oil (API 10 - 20)	12,889	405	1,428	30,403	69%
Light Oil (API 20 - 30)	5,424	225	575	12,303	28%
Ultra-Light Oil (API >30)	599	9	65	1,374	3%
Totals:	**18,912**	**639**	**2,069**	**44,080**	

Table 4-9: Emissions of Natural Gas Well Workovers (Metric Tons/Year)

Type	Number of Well Workovers	CO_2	CH_4	CO_2e	Percent of Total CO_2e
Dry Gas	304	6	46	970	PD
Natural Gas Storage	PD	PD	PD	PD	PD
Totals:	**PD**	**PD**	**PD**	**PD**	

Table 4-10: Emissions of Crude Oil Well Cleanups by API Range (Metric Tons/Year)

Type	Number of Well Cleanups	CO_2	CH_4	CO_2e	Percent of Total CO_2e
Ultra-Heavy Oil (API <10)	0	0	0	0	0%
Heavy Oil (API 10 - 20)	956	103	90	1,993	29%
Light Oil (API 20 - 30)	1,977	113	201	4,327	64%
Ultra-Light Oil (API >30)	187	3	21	442	7%
Totals:	**3,120**	**219**	**312**	**6,762**	

Table 4-11: Emissions of Natural Gas Well Cleanups (Metric Tons/Year)

Type	Number of Well Cleanups	CO_2	CH_4	CO_2e	Percent of Total CO_2e
Dry Gas	86	0	14	292	PD
Natural Gas Storage	PD	PD	PD	PD	PD
Totals:	**PD**	**PD**	**PD**	**PD**	

Chapter 5 – Electricity Generation and Use

Many crude oil and natural gas facilities often produce their own electricity. This is done using generators, cogeneration units, or combined heat and power units. Many of the cogeneration units and combined heat and power units are used to generate steam as well as electricity.

Table 3 of the 2007 Oil and Gas Industry Survey required facilities to report the amount of electricity generated onsite, exported, and purchased. Table 5-1 lists the total electricity by primary business type. Twenty-four terra-watt hours (Twh) of electricity was generated by facilities through generators, cogeneration units, or combined heat and power units. Sixty percent of the generated electricity was used on site, with the remainder exported to either the grid or other facilities. Crude oil and natural gas facilities purchased 17 Twh of electricity in 2007. This is nine percent of the 200 Twh of electricity that was purchased by non-residential customers (CEC, 2007).

Table 5-1: Electricity by Primary Business (Metric Tons/Year)

Type	Generated (MWh)	Used (MWh)	Exported (MWh)	Purchased (MWh)
Onshore Crude Production	15,564,710	14,259,805	1,304,905	17,183,986
Offshore Crude Production	81,739	81,739	0	69,056
Onshore Natural Gas Production	PD	PD	PD	PD
Natural Gas Storage	7,729	7,729	0	27,976
Natural Gas Processing	49,037	18,078	30,959	60,393
Crude Pipeline	19,202	5,195	14,007	194,877
Crude Processing	PD	PD	PD	PD
Crude Storage	0	0	0	67,270
PERP Equipment Owner	PD	PD	PD	PD
Other	8,472,167	152,854	8,319,313	7,888
Totals:	**24,582,599**	**14,910,228**	**9,672,371**	**17,676,795**

The business type “other” includes the following self-reported facility types:

- CNG compression and marketing
- Cogeneration
- Combined heat and power
- Electricity generation
- Portable heating
- Water disposal
- Vapor recovery services.

References

CEC (2007). California Energy Commission. 2007 Non-Residential Electricity Consumption by County. http://www.ecdms.energy.ca.gov/elecbycounty.aspx. 2007.

Chapter 6 – Vapor Recovery

Vapor recovery is the process of collecting vapors so their emissions to the atmosphere are substantially reduced. Vapor recovery equipment collects or converts these vapors. Table 4 of the 2007 Oil and Gas Industry Survey collected information about four types of vapor recovery units. These include flares, incinerators, thermal oxidizers, and carbon adsorbers. Flares, incinerators, and thermal oxidizers convert vapors while carbon adsorbers collect them. In the oil and gas production sector, these units are also used to convert or collect natural gas that is not of good enough quality to enter a natural gas transmission pipeline or that is stranded, and which would otherwise be emitted to the atmosphere.

Table 4 of the Oil and Gas Industry Survey collected the following information about each facility's vapor recovery units.

- Type
  - Flare, incinerator, thermal oxidizer, or carbon adsorber
- Use
  - Vapor recovery or emergency were choices on the survey
  - Some facilities added other uses such as gas disposal and planned flaring
- For flares, incinerators, and thermal oxidizers
  - Size in btu/hr
  - Throughput in scf
  - Combustion efficiency
  - CH_4 and CO_2 content of the gas stream
  - Carbon mole ratio
- For carbon adsorbers
  - Size in cubic feet
  - Throughput in scf
  - Capture efficiency
  - CH_4 content of the gas stream

Table 6-1 lists the number of vapor recovery units by type. Flares represented the most common type. They account for 77 percent of the total number of vapor recovery units.

Table 6-1: Number of Vapor Recovery Units by Type

Type	Number of Units
Flare	196
Thermal Oxidizer	19
Incinerator	23
Carbon Adsorbers	17
Totals:	**255**

Emissions

Emissions from flares, incinerators, thermal oxidizers, and carbon adsorbers are detailed in this section. Emissions from flares, incinerators, and thermal oxidizers are categorized as combustion emissions from burning fuel. Emissions from carbon adsorbers are considered vented emissions. The emissions are calculated using fuel data supplied in the survey and are detailed in Appendix B. The CO_2, CH_4, and N_2O emissions are multiplied by their corresponding GWP (1 for CO_2, 21 for CH_4, and 310 for N_2O) to get the CO_2e value.

Table 6-2 lists the combustion emissions from flares, incinerators, and thermal oxidizers. Some equipment types were combined from what was listed on individual surveys to protect confidential company data and to aggregate similar pieces of equipment. For example, incinerators, burners, and afterburners were combined into the category "incinerator." This table shows that flares and thermal oxidizers have similar CO_2e emissions even though there are 10 times as many flares as thermal oxidizers. This is because both flares and thermal oxidizers combusted similar volumes of gas.

Table 6-2: Vapor Recovery Combustion Emissions by Type (Metric Tons/Year)

Type	Number of Units	CO_2	CH_4	N_2O	CO_2e	Percent of Total CO_2e
Flare	196	242,454	812	0.4	259,623	50%
Thermal Oxidizer	19	216,378	80	0.3	218,155	42%
Incinerator	23	44,846	49	0.1	45,896	9%
Totals:	**238**	**503,678**	**941**	**0.7**	**523,675**	

Table 6-3 lists the vented emissions from carbon adsorbers. The CO_2e emissions from carbon adsorbers are a very small fraction of the total emissions from vapor recovery units.

Table 6-3: Carbon Adsorber Vented Emissions (Metric Tons/Year)

Type	Number of Units	CH_4	CO_2e
Carbon Adsorbers	17	54	1,131
Totals:	**17**	**54**	**1,131**

Table 6-4 lists the uses of flares, incinerators, and thermal oxidizers. All carbon adsorbers were used for vapor recovery. Some vapor recovery uses were combined from what was listed on individual surveys to protect confidential company data and to aggregate similar equipment uses. Below is a list of use categories and the types they represent.

- Unknown – unknown, not in use, and dormant
- Emergency – emergency, emergency and vapor recovery, planned and unplanned flaring, and standby

- Gas Disposal – gas disposal, maintenance, tank degassing, fuel limited, and vapor recovery/gas disposal

As this table shows, vapor recovery is the dominant use. It accounts for 73 percent of the total CO_2e emissions.

Table 6-4: Vapor Recovery Combustion Emissions by Use (Metric Tons/Year)

Type	Number of Units	CO_2	CH_4	N_2O	CO_2e	Percent of Total CO_2e
Vapor Recovery	123	373,813	475	0.5	383,949	73%
Emergency	92	90,949	364	0.1	98,629	19%
Unknown	11	29,236	75	0.1	30,835	6%
Gas Disposal	12	9,680	28	0.0	10,262	2%
Totals:	**238**	**503,678**	**941**	**0.7**	**523,675**	

Table 6-5 lists the combustion vapor recovery units by their rated size. It includes all flares, incinerators, and thermal oxidizers reported in the 2007 Oil and Gas Industry Survey.

Table 6-5: Number of Combustion Vapor Recovery Units by Size

Range (MMBtu/Hr)	Number of Units	Percent of Total
Unknown	26	11%
<5	84	35%
5 to 25	55	23%
25 to 100	17	7%
100 to 500	32	13%
500 to 1000	9	4%
>1000	15	6%
Totals:	**238**	

Chapter 7 – Combustion Equipment

Combustion equipment encompasses many different types of equipment that all burn a fuel for energy. The 2007 Oil and Gas Industry Survey collected information about two main categories of combustion equipment: external combustion units and internal combustion units.

Table 5 of the Oil and Gas Industry Survey collected the following information about each facility's combustion equipment.

- Type
  - External
    - Boiler, steam generator, heater/treater, oil heater, glycol reboiler, or amine reboiler
    - Facilities could also specify a type not listed above
  - Internal combustion
    - Reciprocating two-stroke or four-stroke and either lean or rich burn, combined heat and power, simple or combined cycle turbine, microturbine, drill rig, or workover rig,
    - Facilities could also specify a type not listed above
- Use for internal combustion equipment
  - Compressor, vapor recovery, crude oil pump, well pump, or water injection pump
  - Facilities could also specify a use not listed above
- Fuel type
  - Including volume, higher heating value (hhv), carbon weight percent, liquid fuel density, and gaseous fuel molecular weight as appropriate
- Manufacturer
- Model year
- Average load in HP, BTU, or MW
- Inspection frequency
- Permitting and PERP registration

Emissions

Emission calculations for combustion equipment are dependent on the information reported in the survey. Three methods are available to calculate CO_2, CH_4, and N_2O. The first method uses a mass balance approach, the second uses equipment-specific emission factors, and the third method uses fuel-specific emission factors. The mass balance approach is used first if fuel composition was reported. If fuel composition was not reported, the equipment-specific emission factors are used. For combustion equipment emission calculations that could not utilize either the first or second method, fuel-specific emission factors were used. These equations and emission factors are detailed in Appendix B. The CO_2, CH_4, and N_2O emissions are multiplied by their corresponding GWP numbers (1 for CO_2, 21 for CH_4, and 310 for N_2O) to get the CO_2e values.

External Combustion

An external combustion engine is an engine where an internal fluid is heated by an external heat source. The most common types of external combustion units are steam generators and boilers. Some equipment types were combined from what was listed on individual surveys to protect confidential company data and to aggregate similar pieces of equipment. Below is a list of equipment categories and the types they represent:

- Boilers – boilers and locomotive boilers;
- Heaters – heaters, central process heaters, tank heaters, forced air furnaces, water heaters, hot water circulating heaters, line heaters, oil heaters, and process heaters; and
- Vapor Recovery – flares, incinerators, and thermal oxidizers that were reported on Table 5 rather than Table 4 of the Oil and Gas Industry Survey.

Steam generators create steam that is injected into the geological formation to increase crude oil production. Cogeneration units produce steam for injection and electricity generation. Heater/Treaters are oil/water separators that use heat to expedite the separation process. Reboilers include glycol and amine reboilers. These units heat glycol or amine to remove water in dehydrators and the acid gas in amine units.

Table 7-1 lists the CO_2, CH_4, and N_2O emissions from external combustion equipment. This table shows that the majority of the emissions are from steam generators.

Table 7-1: External Combustion Emissions by Equipment Type (Metric Tons/Year)

Type	Number of Units	CO_2	CH_4	N_2O	CO_2e	Percent of Total CO_2e
Steam Generator	587	6,658,156	2,973	115	6,756,167	83%
Cogeneration	34	930,377	15	2	931,185	12%
Boiler	132	140,240	245	0	145,454	2%
Heater	294	116,301	34	2	117,584	1%
Heater/Treater	371	115,607	47	2	117,226	1%
Reboiler	201	17,466	15	0	17,782	0%
Vapor Recovery	11	10,681	0	0	10,690	0%
Totals:	**1,630**	**7,988,827**	**3,328**	**121**	**8,096,089**	

Table 7-2 lists the age of the external combustion equipment. The age of each unit was determined from the model year. As this table shows, 80 percent of the units did not have a reported model year. Of the remaining units, most are 5 to 10 years old.

Table 7-2: Age of External Combustion Units

Type	< 5 Years	5 – 10 Years	10 – 20 Years	20 – 30 Years	>30 Years	Unknown	Total
Boiler	3	28	4	15	1	81	132
Cogeneration	0	0	0	0	0	34	34
Heater	1	30	3	4	6	250	294
Heater/Treater	11	61	5	21	5	268	371
Reboiler	5	50	5	7	5	129	201
Steam Generator	10	11	1	25	0	540	587
Vapor Recovery	0	4	1	0	0	6	11
Totals:	**30**	**184**	**19**	**72**	**17**	**1,308**	**1,630**

Internal Combustion

An internal combustion engine is an engine where fuel is burned inside a combustion chamber. The expansion of the gas applies direct force to a component of the engine such as a piston or turbine blade. Some equipment types were combined from what was listed on individual surveys to protect confidential company data and to aggregate similar pieces of equipment. Below is a list of equipment categories and the types they represent:

- Other – generators, pumps, accumulators, and welders; and
- Turbines – turbines, turbines – combined cycle, turbines – simple cycle, and turbines – combined heat and power.

Table 7-3 lists the combustion emissions for internal combustion engines. The type “internal combustion engines” encompasses all the general use reciprocating engines. The type “combined heat and power” and turbines together account for 82 percent of the emissions. The term “combined heat and power” is interchangeable with the term “cogeneration” listed above in “external combustion”. Such units produce electricity and useful heat. The heat is either used to create steam for injection into the geological formation or used to create more electricity. Combined heat and power units could be turbines or reciprocating engines. Facilities reported cogeneration and combined heat and power differently. Thus, they appear as both internal and external combustion.

Table 7-3: Internal Combustion Emissions by Equipment Type (Metric Tons/Year)

Type	Number of Units	CO_2	CH_4	N_2O	CO_2e	Percent of Total CO_2e
Combined Heat and Power	23	3,568,017	612	7	3,583,006	46%
Turbine	64	2,731,036	835	153	2,796,035	36%
Internal Combustion Engine	2,698	1,004,624	4,537	16	1,104,754	14%
Microturbine	29	232,240	581	17	249,584	3%
Drill Rig	174	31,600	1	0	31,708	0%
Workover Rig	225	13,300	1	0	13,345	0%
Other	77	72	0	0	73	0%
Totals:	**3,290**	**7,580,889**	**6,567**	**193**	**7,778,505**	

Table 7-4 lists the age of internal combustion units by type. Almost half of the units did not have a reported model year in their survey; thus, their ages are unknown.

Table 7-4: Age of Internal Combustion Units

Type	< 5 Years	5 – 10 Years	10 – 20 Years	20 – 30 Years	>30 Years	Unknown	Total
Combined Heat and Power	0	4	13	1	5	0	23
Drill Rig	123	11	10	17	12	1	174
Internal Combustion Engine	347	362	92	240	180	1,477	2,698
Microturbine	2	0	0	0	0	27	29
Other	22	0	0	0	0	55	77
Turbine	1	6	7	16	3	31	64
Workover Rig	24	63	34	4	100	0	225
Totals:	**519**	**446**	**156**	**278**	**300**	**1,591**	**3,290**

Internal Combustion Engines

The type category "internal combustion engines" was reported on Table 5 of the 2007 Oil and Gas Industry Survey as reciprocating engines. Many internal combustion engine uses were combined from what was listed on individual surveys to protect confidential company data and to aggregate similar equipment uses. Appendix D lists the use categories and the types they represent.

Table 7-5 lists the combustion emissions by use. The use "unknown" accounts for equipment where a use was not specified on the survey. The use "pump" is separate from "crude oil pump" and "water pump" as it was not indicated on the survey which kind of pump it is. Cogeneration is listed here as a use for a reciprocating engine. As stated above, cogeneration units can be either reciprocating engines or turbines.

Table 7-5: Combustion Emissions of Internal Combustion Engines by Use (Metric Tons/Year)

Use	Number of Units	CO_2	CH_4	N_2O	CO_2e	Percent of Total CO_2e
Compressor	693	714,295	4,200	13	806,644	73%
Crude Oil Pump	722	103,846	224	1	108,786	10%
Power Generation	229	54,000	41	0	54,997	5%
Well Servicing	297	53,181	3	0	53,360	5%
Water Pump	49	27,619	51	0	28,778	3%
Unknown	96	20,856	5	0	20,986	2%
Pump	297	14,796	1	0	14,841	1%
Miscellaneous	189	9,440	1	0	9,482	1%
Cogeneration	17	5,254	13	0	5,534	1%
Crane	36	915	0	0	919	0%
Air Compressor	35	277	0	0	278	0%
Emergency Services	38	145	0	0	149	0%
Totals:	**2,698**	**1,004,624**	**4,537**	**16**	**1,104,754**	

Compressors account for the majority of the emissions for internal combustion engines. They emit 73 percent of the internal combustion engine CO_2e emissions. Crude oil

pumps account for the next highest percentage. The remaining 17 percent of the emissions are distributed among the remaining ten use categories.

Table 7-6 lists combustion emissions by rich burn, lean burn, two-stroke, or four-stroke. Survey respondents did not report the type for about half of the units. Of the remaining units for which a type was not specified, 66 percent are rich burn, four-stroke engines. Rich burn two-stroke engines are the least common.

Table 7-6: Combustion Emissions of Internal Combustion Engines by Type (Metric Tons/Year)

Type	Number of Units	CO_2	CH_4	N_2O	CO_2e	Percent of Total CO_2e
Rich Burn Four-Stroke	914	378,030	828	3	396,392	36%
Rich Burn Two-Stroke	78	17,134	13	0	17,431	2%
Lean Burn Four-Stroke	284	395,947	3,279	10	467,823	42%
Lean Burn Two-Stroke	115	43,195	356	2	51,262	5%
Unknown	1,307	170,318	62	1	171,846	16%
Totals:	**2,698**	**1,004,624**	**4,537**	**16**	**1,104,754**	

Turbines

Turbines are a type of internal combustion engine where the force from the combustion chamber moves a blade rather than a piston. Some turbine uses were combined from what was listed on individual surveys to protect confidential company data and to aggregate similar equipment uses. Below is a list of use categories and the types they represent:

- Cogeneration – cogeneration, electrical and steam generation, electrical and process heat generation;
- Electricity – electrical generation and power generation; and
- Other – compressors and pumps.

Table 7-7 lists the combustion emissions for turbines by use. Cogeneration accounts for 81 percent of the total emissions.

Table 7-7: Turbine Combustion Emissions by Use (Metric Tons/Year)

Use	Number of Units	CO_2	CH_4	N_2O	CO_2e	Percent of Total CO_2e
Cogeneration	46	2,207,183	791	125	2,262,524	81%
Electricity	6	308,823	22	21	315,810	11%
Other	12	215,029	22	7	217,701	8%
Totals:	**64**	**2,731,036**	**835**	**153**	**2,796,035**	

Table 7-8 lists the combustion emissions from turbines by the type of cycles they use. Combined cycle turbines have a gas turbine that generates electricity, and the waste heat is used to make steam. The steam is then used to generate electricity through a

steam turbine or injected into the geological formation to increase production. Simple cycle turbines generate electricity in the same manner as combined cycle turbines. The difference is that the waste heat is not used to create steam for more electricity or useful steam.

Some turbine cycle types were combined from what was listed on individual surveys to protect confidential company data:

- Turbine Combined Cycle – turbine combine cycle and turbines-combined heat and power.

Table 7-8 shows that the majority of the emissions are from combined cycle turbines.

Table 7-8: Turbine Combustion Emissions by Cycle Type (Metric Tons/Year)

Type	Number of Units	CO_2	CH_4	N_2O	CO_2e	Percent of Total CO_2e
Turbine Combined Cycle	23	1,648,609	167	124	1,690,680	60%
Turbine	26	682,553	640	1	696,374	25%
Turbine Simple Cycle	15	399,873	28	27	408,981	15%
Totals:	**64**	**2,731,036**	**835**	**153**	**2,796,035**	

Cogeneration

Cogeneration and combined heat and power are interchangeable terms. Both refer to engines that produce electricity and waste heat. In these categories, the waste heat is used to create steam. This steam is then injected into geological formations to increase crude oil production or used to create more electricity.

Cogeneration and combined heat and power units were reported in the 2007 Oil and Gas Industry Survey in many different ways. Table 7-9 lists these units together in the manner they were reported. Two turbine types were combined from what was listed on individual surveys to protect confidential company data. The type “turbines combined cycle” and “turbines-combined heat and power” were combined under the type “turbine combined cycle.”

Table 7-9: Cogeneration Combustion Emissions by Type (Metric Tons/Year)

Type	Number of Units	CO_2	CH_4	N_2O	CO_2e	Percent of Total CO_2e
Combined Heat and Power	23	3,568,017	612	7	3,583,006	50%
Turbine Combined Cycle	19	1,642,198	153	124	1,683,882	24%
Cogeneration	34	930,377	15	2	931,185	13%
Turbine	23	563,939	638	1	577,654	8%
Turbine Simple Cycle	10	309,869	21	21	316,799	4%
Internal Combustion Engine	54	36,143	19	0	36,633	1%
Totals:	**163**	**7,050,543**	**1,457**	**155**	**7,129,158**	

Total Combustion Emissions

Table 7-10 lists the combustion emissions from equipment listed on both Tables 4 and 5 of the Oil and Gas Industry Survey. It shows that the majority of the emissions are from external and internal combustion engines. Vapor recovery units, which include flares, thermal oxidizers, and incinerators, only account for 3 percent of the total combustion emissions from this sector.

Table 7-10: Combustion Emissions by Combustion Type (Metric Tons/Year)

Type	CO_2	CH_4	N_2O	CO_2e	Percent of Total CO_2e
External	7,988,827	3,328	121	8,096,089	49%
Internal	7,580,889	6,567	193	7,778,505	47%
Vapor Recovery	503,678	941	1	523,675	3%
Totals:	**16,073,395**	**10,836**	**314**	**16,398,268**	

Table 7-11 lists the total combustion emissions by primary business type. This table shows that 88 percent of the emissions are from onshore crude production and the business type “other.”

The business type “other” includes the following self-reported facility types:

- CNG compression and marketing,
- Cogeneration,
- Combined heat and power,
- Electricity generation,
- Portable heating, and
- Water disposal.

Table 7-11: Combustion Emissions by Primary Business (Metric Tons/Year)

Type	CO_2	CH_4	N_2O	CO_2e	Percent of Total CO_2e
Onshore Crude Production	9,601,843	6,069	178	9,784,578	60%
Other	4,579,058	161	108	4,616,047	28%
Natural Gas Processing	832,060	2,173	6	879,601	5%
Crude Processing and Storage	334,290	580	2	346,952	2%
Natural Gas Storage	200,225	1,126	9	226,569	1%
Onshore Natural Gas Production	204,801	620	4	218,910	1%
PERP Equipment Owner	148,048	19	1	148,825	1%
Offshore Crude	101,521	78	4	104,272	1%
Crude Pipeline	71,548	9	3	72,515	0%
Totals:	**16,073,395**	**10,836**	**314**	**16,398,268**	

Table 7-12 lists the total combustion emissions by fuel types. Natural gas accounts for 99 percent of the total combustion emissions. Pipeline natural gas and associated gas are the top two of all the natural gas fuels.

Table 7-12: Combustion Emissions by Fuel Type (Metric Tons/Year)

Type	Volume Combusted (mscf or gal)	CO_2	CH_4	N_2O	CO_2e	Percent of Total CO_2e
Pipeline Quality Gas	202,096,976	11,313,493	3,718	231	11,463,292	70%
Associated Gas	54,465,754	3,424,822	5,740	71	3,567,473	22%
Waste Gas	17,656,611	886,192	619	5	900,899	5%
Dry Gas	4,623,503	252,638	749	4	269,709	2%
Diesel	18,195,581	180,052	8	2	180,688	1%
Landfill Gas	332,047	14,007	0	0	14,014	0%
Propane	419,638	1,748	0	0	1,750	0%
Gasoline	47,081	433	0	0	435	0%
LPG	1,400	8	0	0	8	0%
Totals:		**16,073,395**	**10,836**	**314**	**16,398,268**	

Chapter 8 – Components

In the 2007 Oil and Gas Industry Survey, Table 6 asked for counts of components by service type. Service type was natural gas, light crude oil (API >20), and heavy crude oil (API <20). Facilities were asked to report counts of the following component types:

- Components 1 inch and above
  - Manual valves, flanges, connectors, open-ended lines, and threaded components; and
- Other components
  - Pump seals, pressure relief valves, bursting discs, diaphragms, hatches, meters, polished rod stuffing boxes, sight glasses, loading arms, and dump lever arms.

Table 8-1 lists the number of components by service type that was reported. The service type "natural gas" includes dry gas, associated gas, and gas storage. This table shows that the total number of all components is fairly equally distributed throughout the three service types.

Table 8-1: Number of Components by Service Type

Type	Natural Gas	Light Crude (API >20)	Heavy Crude (API <20)	Total
Connectors	1,006,166	963,565	1,401,237	3,370,968
Threaded Components	992,715	633,749	531,380	2,157,844
Manual Valves	471,916	244,296	321,321	1,037,533
Flanges	348,579	260,939	370,274	979,792
Polished Rod Stuffing Boxes	1,925	8,441	35,174	45,540
Pressure Relief Valves	16,754	7,293	3,614	27,661
Meters	8,997	3,687	5,670	18,354
Open-ended Lines	5,639	1,543	9,608	16,790
Pump Seals	8,049	3,327	3,942	15,318
Hatches	5,043	2,410	4,820	12,273
Sight Glasses	2,983	1,825	2,740	7,548
Diaphragms	5,142	995	1,114	7,251
Dump Lever Arm	2,963	515	1,337	4,815
Bursting Discs	1,354	195	175	1,724
Loading Arms	547	137	334	1,018
Totals:	**2,878,772**	**2,132,917**	**2,692,740**	**7,704,429**

Emissions

Components are connections from which vapors could leak. Emissions from components are considered fugitive emissions because these connections are not designed to intentionally leak. CO_2 and CH_4 emissions are calculated using emission factors and total component counts and are detailed in Appendix B. The CO_2 and CH_4, emissions are multiplied by their corresponding GWP numbers (1 for CO_2 and 21 for CH_4) to get the CO_2e values.

Table 8-2 lists the fugitive emissions by primary business type. The business type "other" includes the following self-reported facility types:

- CNG compression and marketing,
- Cogeneration,
- Combined heat and power,
- Electricity generation,
- Portable heating,
- Water disposal, and
- Vapor recovery services.

This table shows that the majority of the number of components and the total CO_2e are from onshore crude production. This business type includes both oil and associated natural gas components. It accounts for 76 percent of the emissions and 82 percent of the number of components.

Table 8-2: Fugitive Emissions of Components by Primary Business Type (Metric Tons/Year)

Type	Number of Units	CO_2	CH_4	CO_2e	Percent of Total CO_2e
Onshore Crude	6,339,732	232	617	13,198	76%
Natural Gas Processing	738,279	8	69	1,457	8%
Onshore Natural Gas	195,062	1	34	712	4%
Crude Processing	PD	PD	PD	PD	PD
Offshore Crude	231,733	7	28	604	3%
Natural Gas Storage	47,486	0	12	245	1%
Crude Pipeline	69,612	1	10	216	1%
Crude Storage	25,586	1	6	130	1%
Other	PD	PD	PD	PD	PD
Totals:	**7,704,429**	**256**	**811**	**17,283**	

Table 8-3 lists the fugitive emissions by service type. Natural gas components account for 40 percent of the CO_2e emissions. The emissions are relatively evenly distributed among natural gas, heavy crude, and light crude service.

Table 8-3: Fugitive Emissions of Components by Service Type (Metric Tons/Year)

Type	Number of Units	CO_2	CH_4	CO_2e	Percent of Total CO_2e
Natural Gas	2,878,772	68	324	6,866	40%
Heavy Crude	2,692,740	160	263	5,680	33%
Light Crude	2,132,917	29	224	4,737	27%
Totals:	**7,704,429**	**256**	**811**	**17,283**	

Table 8-4 lists the fugitive emissions by type of component. Connectors, manual valves, flanges, and threaded components account for 83 percent of the emissions. They also account for 98 percent of the total number of components.

Table 8-4: Fugitive Emissions of Components by Type (Metric Tons/Year)

Type	Number of Units	CO_2	CH_4	CO_2e	Percent of Total CO_2e
Connectors	3,370,968	44	239	5,063	29%
Manual Valves	1,037,533	44	152	3,234	19%
Flanges	979,792	99	141	3,057	18%
Threaded Components	2,157,844	37	142	3,008	17%
Pump Seals	15,318	8	50	1,060	6%
Polished Rod Stuffing Boxes	45,540	10	26	561	3%
Pressure Relief Valves	27,661	4	21	453	3%
Meters	18,354	3	13	274	2%
Hatches	12,273	2	8	180	1%
Sight Glasses	7,548	1	6	117	1%
Diaphragms	7,251	1	6	117	1%
Dump Lever Arm	4,815	1	3	68	0%
Open-ended Lines	16,790	1	2	47	0%
Bursting Discs	1,724	0	1	31	0%
Loading Arms	1,018	0	1	14	0%
Totals:	**7,704,429**	**256**	**811**	**17,283**	

Tables 8-5 through 8-7 list the fugitive emissions by type of component and service type.

Table 8-5: Fugitive Emissions of Natural Gas Components by Type (Metric Tons/Year)

Type	Number of Units	CO_2	CH_4	CO_2e	Percent of Total CO_2e
Manual Valves	471,916	21	81	1,720	25%
Connectors	1,006,166	15	59	1,263	18%
Threaded Components	992,715	9	58	1,237	18%
Flanges	348,579	9	48	1,014	15%
Pump Seals	8,049	6	42	893	13%
Pressure Relief Valves	16,754	2	13	267	4%
Meters	8,997	2	7	139	2%
Diaphragms	5,142	1	4	87	1%
Hatches	5,043	1	4	79	1%
Sight Glasses	2,983	0	2	50	1%
Dump Lever Arm	2,963	1	2	44	1%
Polished Rod Stuffing Boxes	1,925	0	1	30	0%
Bursting Discs	1,354	0	1	25	0%
Open-ended Lines	5,639	1	1	13	0%
Loading Arms	547	0	0	8	0%
Totals:	**2,878,772**	**68**	**324**	**6,866**	

Table 8-6: Fugitive Emissions of Light Crude[1] Components by Type (Metric Tons/Year)

Type	Number of Units	CO_2	CH_4	CO_2e	Percent of Total CO_2e
Connectors	963,565	7	75	1,588	34%
Threaded Components	633,749	7	46	978	21%
Flanges	260,939	5	42	877	19%
Manual Valves	244,296	5	31	665	14%
Polished Rod Stuffing Boxes	8,441	1	8	159	3%
Pressure Relief Valves	7,293	1	7	151	3%
Pump Seals	3,327	1	6	123	3%
Meters	3,687	1	3	73	2%
Hatches	2,410	0	2	48	1%
Sight Glasses	1,825	0	2	36	1%
Diaphragms	995	0	1	18	0%
Dump Lever Arm	515	0	0	9	0%
Open-ended Lines	1,543	0	0	4	0%
Bursting Discs	195	0	0	4	0%
Loading Arms	137	0	0	2	0%
Totals:	**2,132,917**	**29**	**224**	**4,737**	

1. Light Crude is crude oil with an API gravity greater than 20.

Table 8-7: Fugitive Emissions of Heavy Crude[1] Components by Type (Metric Tons/Year)

Type	Number of Units	CO_2	CH_4	CO_2e	Percent of Total CO_2e
Connectors	1,401,237	22	104	2,212	39%
Flanges	370,274	85	51	1,166	21%
Manual Valves	321,321	18	40	849	15%
Threaded Components	531,380	21	37	794	14%
Polished Rod Stuffing Boxes	35,174	9	17	372	7%
Meters	5,670	1	3	62	1%
Hatches	4,820	1	3	53	1%
Pump Seals	3,942	1	2	43	1%
Pressure Relief Valves	3,614	1	2	35	1%
Sight Glasses	2,740	0	1	31	1%
Open-ended Lines	9,608	0	1	30	1%
Dump Lever Arm	1,337	0	1	14	0%
Diaphragms	1,114	0	1	12	0%
Loading Arms	334	0	0	4	0%
Bursting Discs	175	0	0	2	0%
Totals:	**2,692,740**	**160**	**263**	**5,680**	

1. Heavy Crude is crude oil with an API gravity less than 20.

Chapter 9 – Automated Control Devices

Table 7 of the 2007 Oil and Gas Industry Survey asked facilities to report the number of automated control devices. Automated control devices are also commonly referred to as pneumatic devices. Facilities were asked to report the following information about their automated control devices:

- Controllers
  - Gas, electric, or air actuated
  - Continuous bleed, intermittent bleed, low bleed, or no bleed
  - Number on gas recovery, and
- Actuators
  - Gas, electric, or air actuated
  - Piston valve, hydraulic valve, or turbine valve operator
  - Number on gas recovery.

Emissions

Emissions from automated control devices are considered vented emissions as these devices are designed to leak. CO_2 and CH_4 emissions from automated control devices are calculated by multiplying the number of devices by an emission factor; those calculations are detailed in Appendix B. The number of each type of device used to calculate emissions is the total number of devices minus the number on gas recovery. Devices on gas recovery capture the gas used to actuate. The CO_2 and CH_4 emissions are multiplied by their corresponding GWP numbers (1 for CO_2 and 21 for CH_4) to get the CO_2e values.

Table 9-1 lists the vented emissions by primary business type. The business type "other" includes the following self-reported facility types:

- Cogeneration,
- Combined heat and power,
- Electricity generation,
- Portable heating,
- Water disposal, and
- Vapor recovery services.

This table shows that the majority of the vented emissions are from automated control devices found in onshore natural gas production facilities. However, these facilities account for only 3 percent of the total number of devices in California. Onshore crude oil production facilities have 79 percent of the number of automated control devices but account for only 4 percent of the emissions.

Table 9-1: Vented Emissions of Automated Control Devices by Primary Business Type (Metric Tons/Year)

Type	Number of Units	CO_2	CH_4	CO_2e	Percent of Total CO_2e
Onshore Natural Gas	2,526	88	5,056	106,267	88%
Natural Gas Storage	2,585	2	380	7,984	7%
Onshore Crude	57,549	69	253	5,378	4%
Natural Gas Processing	832	1	36	764	1%
Offshore Crude	6,197	0	2	35	0%
Crude Storage	PD	PD	PD	PD	PD
Crude Pipeline	2,517	0	0	0	0%
Crude Processing	PD	PD	PD	PD	PD
Other	109	0	0	0	0%
Totals:	**72,861**	**161**	**5,727**	**120,434**	

Table 9-2 lists the vented emissions by type of automated control device. This table also lists the total number of devices and the number on gas recovery. Several facilities listed electric and air controllers and actuators on gas recovery. We are assuming that controllers and actuators that are either air or electrically actuated do not have any emissions associated with them. Continuous bleed and intermittent bleed controllers account for 99 percent of the vented emissions from this category. However, they only account for 2 percent of the total number of devices.

Table 9-2: Vented Emissions of Automated Control Devices by Type (Metric Tons/Year)

Type	Number of Units	Number on Gas Recovery	CO_2	CH_4	CO_2e	Percent of Total CO_2e
Controllers						
Continuous Bleed	1,151	2	89	4,915	103,298	86%
Intermittent Bleed	405	24	69	760	16,019	13%
Low Bleed	50	0	2	46	969	1%
No Bleed	1,054	0	0	0	0	0%
Electric Controller	6,391	384	0	0	0	0%
Air Controller	7,995	599	0	0	0	0%
Actuators						
Piston Valve Operator	1,030	111	0	1	15	0%
Hydraulic Valve Operator	136	0	1	6	131	0%
Turbine Valve Operator	3	0	0	0	1	0%
Electric Actuator	6,205	18	0	0	0	0%
Air Actuator	48,441	643	0	0	0	0%
Totals:	**72,861**	**1,781**	**161**	**5,727**	**120,434**	

Chapter 10 – Inspection and Maintenance

Many air districts in California require crude oil and natural gas facilities to routinely inspect their fugitive components. Table 8 of the 2007 Oil and Gas Industry Survey collected information about each facility's inspection and maintenance program (I&M). The following information were requested:

- Whether or not the facility follows an I&M program;
- District rule number governing the I&M program; and
- Leak Threshold.

An I&M program is a routine that a facility follows to inspect components for vapor leaks. Many air districts require facilities to inspect their components a specific number of times per year. They will also designate a leak threshold to test against. A component leaking above the threshold or below the threshold will determine how long the facility has to repair the leak. Components with a higher leak rate generally must be repaired sooner than ones with a lower leak rate.

Of the 1,632 facilities that completed the survey, 602 have an I&M program, 566 do not have an I&M program, and 470 did not complete Table 9 of the survey. Table 10-1 lists the number of facilities utilizing each leak threshold. Many facilities have more than one leak threshold they test against depending on the type of component. Thus, the total number of facilities listed in Table 10-1 will add up to more than the total 602 facilities with an I&M program.

Table 10-1: Number of Facilities Utilizing Each Leak Threshold

Leak Threshold	Number of Facilities
0 – 500 ppm	247
500 – 1,000 ppm	217
1,000 – 2,000 ppm	146
2,000 – 10,000 ppm	166
10,000 – 50,000 ppm	145
> 50,000 ppm	60

Chapter 11 – Natural Gas Dehydrators

Natural gas dehydrators remove water from gas streams by passing natural gas through glycol or over a desiccant material. Table 9 of the 2007 Oil and Gas Industry Survey (Appendix A) collected process information about natural gas dehydrators. Facilities were asked to report the following information:

- Type
  - Glycol or dessicant
  - Facilities could also specify a type not listed above;
- Average natural gas composition
  - Percent CH_4, H_2S, CO_2 for input and output streams
  - Higher heating value (HHV) in btu for input and output streams;
- Input and output volume in standard cubic feet;
- Quantity of liquids removed in tons/year;
- For glycol units
  - Circulation rate (gal/hr)
  - Average flash tank pressure (psia)
  - Average contactor pressure (psia)
  - Whether a gas assisted pump, electric pump, stripping gas, or a flash separator was used;
- For desiccant units
  - Volume of dehydrator (ft^3)
  - Pressure (psig)
  - Percent of packed vessel volume that is natural gas
  - Frequency of desiccant replacement (days); and
- For all units' vapor recovery system
  - Type
    - Flare, incinerator, collection system
    - Facilities could also specify a type not listed above
  - Control efficiency.

Emissions

Dehydrators have combustion, vented, and fugitive emissions. Combustion emissions were calculated from Table 5 of the 2007 Oil and Gas Industry Survey and are listed under "reboiler" emissions in Chapter 7 of this report. Vented and fugitive emissions are summarized here.

There are two methods for calculating vented emissions from dehydrators and one method for calculating fugitive. The first venting method is for glycol units. It uses process information to calculate venting losses. The second venting method is for desiccant units. It calculates vented emissions based on replacement of the desiccant material. The third method calculates the fugitive emissions using a mass balance approach. Appendix B details the calculations for all three methods. The CO_2 and CH_4

emissions are adjusted by the vapor recovery efficiency and then multiplied by their corresponding GWP numbers (1 for CO_2 and 21 for CH_4) to get the CO_2e values.

Table 11-1 lists the vented emissions by type of dehydrator. Some equipment types were combined from what was listed on individual surveys to protect confidential company data and to aggregate similar pieces of equipment. Below is a list of equipment categories and the types they represent:

- Desiccant – desiccant and scrubber dehydrators; and
- Chiller – gas chiller, methanol chiller, low temperature separation, and refrigeration dehydrators.

Glycol dehydrators make up 85 percent of the dehydrators in California and are responsible for almost all the CO_2e emissions.

Table 11-1: Vented Emissions of Natural Gas Dehydrators by Type (Metric Tons/Year)

Type	Number of Units	CO_2	CH_4	CO_2e	Percent of Total CO_2e
Glycol	261	308	1,974	41,772	100%
Desiccant	41	0.01	0.09	1.94	0%
Chiller	6	0	0	0	0%
Totals:	**308**	**308**	**1,975**	**41,774**	

Table 11-2 lists the fugitive emissions by type of dehydrator. Again, glycol dehydrators emit the vast majority of the CO_2e emissions reported in this survey.

Table 11-2: Fugitive Emissions of Natural Gas Dehydrators by Type (Metric Tons/Year)

Type	Number of Units	CO_2	CH_4	CO_2e	Percent of Total CO_2e
Glycol	261	16,567	718	31,643	74%
Chiller	6	0	534	11,224	26%
Desiccant	41	0	0	0	0%
Totals:	308	**16,567**	**1,252**	**42,866**	

Table 11-3 lists the total input volume for each dehydrator type. This volume includes natural gas, water, and other impurities. As indicated, nearly the entire input volume is moved through glycol dehydrators.

Table 11-3: Volume of Natural Gas Dehydrators by Type

Type	Volume (MSCF)	Percent of Total
Glycol	701,123,262	100%
Desiccant	1,338,428	0%
Chiller	1,119,742	0%
Totals:	**703,581,432**	

Table 11-4 lists the combustion, vented, and fugitive emissions from all natural gas dehydrators. The combustion emissions are from Table 5 of the 2007 Oil and Gas Industry Survey and were calculated using the methods detailed in Chapter 7 of this report. This table shows that vented and fugitive CO_2e emissions make up the majority of the emissions from this category.

Table 11-4: Total Emissions of Natural Gas Dehydrators (Metric Tons/Year)

Type	CO_2	CH_4	N_2O	CO_2e	Percent of Total CO_2e
Combustion	14,093	14	0	14,406	15%
Vented	308	1,975	0	41,774	42%
Fugitive	16,567	1,252	0	42,866	43%
Totals:	**30,968**	**3,241**	**0**	**99,046**	

Table 11-5 lists the number of dehydrators that have vapor recovery units. Less than 50 percent of the glycol dehydrators have vapor recovery units. Overall, only 44 percent of all the dehydrators reported in this survey have vapor recovery units.

Table 11-5: Natural Gas Dehydrators Percent with Vapor Recovery

Type	Number of Units	Number on Vapor Recovery	Type-Specific Percent on Vapor Recovery
Glycol	261	125	48%
Chiller	6	5	83%
Desiccant	41	5	12%
Totals:	**308**	**135**	**44%**

Table 11-6 lists the types of vapor recovery units used on dehydrators. Some vapor recovery types were combined from what was listed on individual surveys to protect confidential company data and to aggregate similar pieces of equipment. Below is a list of equipment categories and the types they represent:

- Flare – flares and emergency flares;
- Combustion Unit – burn lines, burners, reboilers, and turbines; and
- Collection System – compressors, collection systems, and carbon adsorbers.

Table 11-6: Natural Gas Dehydrators Types of Vapor Recovery

Type	Number of Units	Percent of Total
None	173	56%
Collection System	77	25%
Combustion Unit	25	8%
Incinerator	17	6%
Flare	11	4%
Thermal Oxidizer	5	2%
Totals:	**308**	

Chapter 12 – Natural Gas Sweetening and Acid Gas Removal

Natural gas sweetening and acid gas removal units (AGR) remove sulfur and CO_2 from the gas streams. Table 10 of the Oil and Gas Industry Survey collected process information about AGR units. Facilities were asked to report the following information:

- Type
  - Solid and non-solid material (Specific types listed in Appendix A)
  - Facilities could also specify a type not listed;
- Average natural gas composition
  - Percent CH_4, H_2S, CO_2 for input and output streams
  - Higher heating value (HHV) in btu for input and output streams;
- Input and output volume in standard cubic feet;
- Quantity of liquids removed in tons/year;
- CO_2 removal
  - Total CO_2 removed (tons/year)
  - Amount vented (tons/year)
  - Amount incinerated (tons/year)
  - Amount captured (tons/year);
- For solid material units
  - Volume of unit (ft^3)
  - Pressure (psig)
  - Percent of packed vessel volume that is natural gas
  - Frequency of material replacement (days); and
- For all units' vapor recovery system
  - Type
    - Flare, incinerator, collection system
    - Facilities could also specify a type not listed above
  - Control efficiency.

Emissions

Natural gas sweetening and AGR units have combustion, vented, and fugitive emissions. Combustion emissions were calculated from Table 5 of the Oil and Gas Industry Survey and are listed under "reboiler" emissions in Chapter 7 of this report. Vented and fugitive emissions are summarized here.

Vented emissions are only calculated for replacing the solid material in solid material AGR units. Fugitive emissions are calculated using a mass balance approach for both solid and non-solid material units. See Appendix B for detailed calculations. The CO_2 and CH_4 emissions are adjusted by the vapor recovery efficiency and then multiplied by their corresponding GWP numbers (1 for CO_2 and 21 for CH_4) to get the CO_2e values.

Table 12-1 lists the vented emissions by type of AGR unit. These emissions contain the calculated vented emissions from solid material replacement as well as the reported

vented CO_2 values. Some equipment types were combined from what was listed on individual surveys to protect confidential company data and to aggregate similar pieces of equipment. Below is a list of equipment categories and the types they represent:

- Sulfa – sulfa scrubs, sulfa treats, sulfurchecks, soluroxes, and sulfide scavengers; and
- Other – triazine, claus process, grace membrane, contactor, liquid redox, lo-cat, molecular gate.

This table shows that 63 percent of the vented CO_2e emissions are from amine AGR units.

Table 12-1: Vented Emissions of Natural Gas AGR Units by Type (Metric Tons/Year)

Type	Number of Units	CO_2	CH_4	CO_2e	Percent of Total CO_2e
Amine	19	32,727	0	32,727	63%
Other	8	19,002	16	19,349	37%
Sulfa	38	19	3	72	0%
Totals:	**65**	**51,749**	**19**	**52,148**	

Table 12-2 lists the fugitive emissions by type of AGR unit. As listed above for Table 12-1, the same categories were combined to protect confidential company data and to aggregate similar pieces of equipment. This table shows that fugitive emissions are more spread out among the three categories. Here, 50 percent of the fugitive CO_2e emissions are from the "other" category. The remaining 50 percent is split between amine units and sulfa units.

Table 12-2: Fugitive Emissions of Natural Gas AGR Units by Type (Metric Tons/Year)

Type	Number of Units	CO_2	CH_4	CO_2e	Percent of Total CO_2e
Other	8	27,651	425	36,578	50%
Sulfa	38	22,755	0	22,756	31%
Amine	19	11,199	151	14,360	19%
Totals:	**65**	**61,605**	**576**	**73,694**	

Table 12-3 lists the combustion, vented, and fugitive emissions from all natural gas AGR units. The combustion emissions are from Table 5 of the 2007 Oil and Gas Industry Survey and were calculated using the methods detailed in Chapter 7 of this report. This table shows that vented and fugitive CO_2e emissions make up the majority of the emissions from this category.

Table 12-3: Total Emissions of Natural Gas AGR Units (Metric Tons/Year)

Type	CO_2	CH_4	N_2O	CO_2e	Percent of Total CO_2e
Combustion	3,373	0	0	3,377	3%
Vented	51,749	19	0	52,148	40%
Fugitive	61,605	576	0	73,694	57%
Totals:	**116,727**	**595**	**0**	**129,219**	

Table 12-4 lists the number of AGR units that have vapor recovery units. Overall, 75 percent of all the AGR units in California have vapor recovery units.

Table 12-4: Natural Gas AGR Units Percent on Vapor Recovery

Type	Number of Units	Number on Vapor Recovery	Type-Specific Percent on Vapor Recovery
Amine	19	11	58%
Other	8	5	63%
Sulfa	38	33	87%
Totals:	**65**	**49**	**75%**

Table 12-5 lists the types of vapor recovery units used on AGR units. Some vapor recovery types were combined from what was listed on individual surveys to protect confidential company data and to aggregate similar pieces of equipment. Below is a list of equipment categories and the types they represent:

- Combustion Unit – boilers, heater/treaters, steam generators, and combustion equipment;
- Collection System – compressors and collection systems.

Table 12-5: Natural Gas AGR Units Types of Vapor Recovery

Type	Number of Units	Percent of Total
Collection System	30	46%
None	16	25%
Combustion Unit	10	15%
Flare	PD	PD
Incinerator	PD	PD
Thermal Oxidizer	PD	PD
Totals:	**65**	

Chapter 13 – Other Natural Gas Processing

Other natural gas processing includes all other units that process natural gas but are not dehydrators (Chapter 10) or AGR units (Chapter 11). Table 11 of the Oil and Gas Industry Survey collected information about these units. The following information was requested from each facility:

- Type
  - Fractionation, nitrogen removal, mercury removal
  - Facilities could list a type not listed above;
- Average natural gas composition
  - Percent CH_4, H_2S, CO_2 for input and output streams
  - Higher heating value (HHV) in btu for input and output streams;
- Input and output volume in standard cubic feet;
- Quantity of liquids removed in tons/year; and
- For all units' vapor recovery system
  - Type
    - Flare, incinerator, collection system
    - Facilities could also specify a type not listed above
  - Control efficiency.

Emissions

Emissions of CO_2 and CH_4 from natural gas processing units are calculated using a mass balance approach. This calculation is detailed in Appendix B. Because a mass balance approach calculates the total vapor loss, determining whether they are vented emissions or fugitive emissions or both is not possible. Thus, emissions from these units are categorized as fugitive. The CO_2 and CH_4 emissions are adjusted by the vapor recovery efficiency and then multiplied by their corresponding GWP numbers (1 for CO_2 and 21 for CH_4) to get the CO_2e values.

Table 13-1 lists the emissions of the natural gas processing units by type. This table shows that almost all the emissions from this category come from fractionation units.

Table 13-1: Emissions of Other Natural Gas Processing Units by Type (Metric Tons/Year)

Type	Number of Units	CO_2	CH_4	CO_2e	Percent of Total CO_2e
Fractionation	5	24,888	225	29,620	100%
Liquefied Petroleum Gas Extraction	PD	PD	PD	PD	PD
Denitrification	PD	PD	PD	PD	PD
Scrubber	PD	PD	PD	PD	PD
Totals:	**14**	**24,888**	**228**	**29,676**	

Table 13-2 lists the number of natural gas processing units with vapor recovery by type of unit. This table shows that nearly all fractionation units have vapor recovery and that,

overall, 93 percent of the natural gas processing units have vapor recovery. Collection systems and flares are used as vapor recovery for these natural gas processing units.

Table 13-2: Other Natural Gas Processing Units Percent on Vapor Recovery

Type	Number of Units	Number on Vapor Recovery	Type-Specific Percent on Vapor Recovery
Fractionation	5	5	100%
LPG Extraction	PD	PD	PD
Scrubber	PD	PD	PD
Denitrification	PD	PD	PD
Totals:	**14**	**13**	**93%**

Chapter 14 – Total Natural Gas Processing Emissions

This chapter combines the emissions from the various natural gas processing equipment discussed in previous chapters. This includes dehydrators (Chapter 11), natural gas sweetening and acid gas removal units (Chapter 12), and other natural gas processing (Chapter 13).

Table 14-1 lists the total California emissions from natural gas processing. As shown, fugitive emissions account for 57 percent of the total emissions from this category while vented emissions account for 36 percent.

Table 14-1: Total California Emissions (Metric Tons/Year)

Type	CO_2	CH_4	N_2O	CO_2e	Percent of Total CO_2e
Combustion	17,466	15	0	17,782	7%
Vented	52,056	1,994	0	93,922	36%
Fugitive	103,061	2,056	0	146,237	57%
Totals:	**172,584**	**4,064**	**0**	**257,941**	

Table 14-2 lists the total natural gas processing emissions by type. This table shows that 50 percent of the emissions from natural gas sweetening and acid gas removal units.

Table 14-2: Natural Gas Processing Emissions by Type (Metric Tons/Year)

Type	CO_2	CH_4	N_2O	CO_2e	Percent of Total CO_2e
Sweetening/Acid Gas Removal	116,727	595	0	129,219	50%
Dehydration	30,968	3,241	0	99,046	38%
Other Processing	24,888	228	0	29,676	12%
Totals:	**172,584**	**4,064**	**0**	**257,941**	

Chapter 15 – Natural Gas Compressors

Natural gas compressors compress natural gas to higher pressures and lower volumes. Table 12 of the 2007 Oil and Gas Industry Survey required facilities to provide the following information about their compressors:

- Type
  - Centrifugal, reciprocating, rotary
  - Facilities could specify a type not listed above;
- For centrifugal
  - Number of wet seals and dry seals;
- For reciprocating
  - Number of cylinders;
- Primary driver type
  - Electric, turbine, piston engine, or integral;
- Starter type
  - Natural gas expansion, instrument air expansion, electric, or hydraulic
  - Facilities could specify a type not listed above;
- Manufacturer;
- Model year;
- Annual usage (hours);
- Inspection frequency;
- Maintenance frequency;
- Discharge pressure (psia);
- Discharge temperature (°F);
- Idle pressure (psia);
- For blowdowns
  - Number
  - Volume of natural gas vented, flared, or recovered; and
- For startups
  - Number
  - Volume of natural gas vented, flared, or recovered.

Table 15-1 lists the number of compressors by type. Some compressor types were combined from what was listed on individual surveys to protect confidential company data and to aggregate similar pieces of equipment. The compressor type “rotary” contain the types rotary, rotary vane, screw, and vane.

Table 15-1: Number of Compressors by Type

Type	Number of Compressors
Centrifugal	47
Reciprocating	911
Rotary	97
Unknown	16
Totals:	**1,071**

Figure 15-1: Reciprocating Compressor

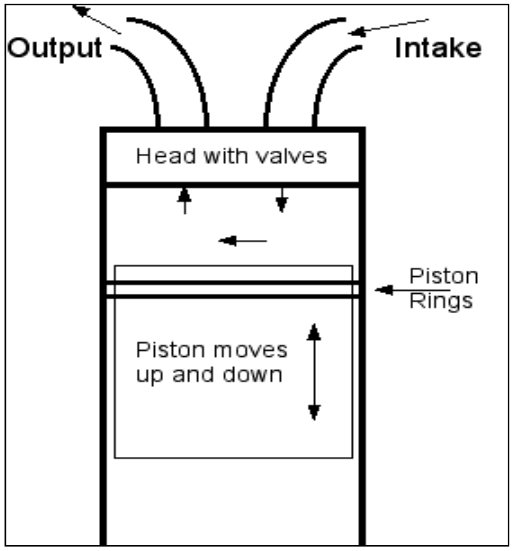

Figures 15-1 through 15-3 shows the compression chambers for each type of compressor.

Reciprocating compressors increase the pressure of natural gas by positive displacement, employing linear movement of a shaft driving a piston in a cylinder.

Figure 15-2: Centrifugal Compressor

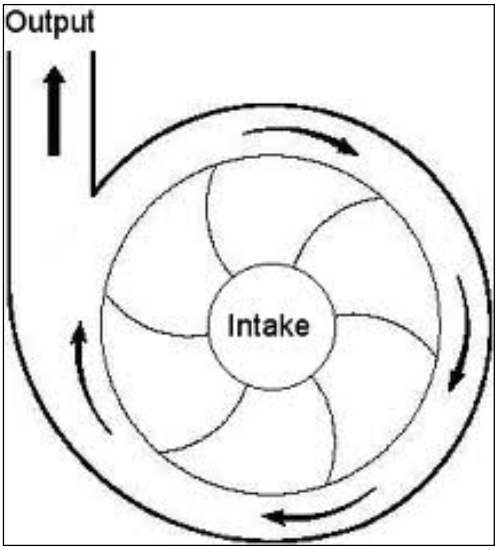

Centrifugal compressors increase the pressure of natural gas by centrifugal action, employing rotating movement of the drive shaft.

Rotary and screw compressors have blades or a cylinder that rotate off center to compress the natural gas.

Figure 15-3: Rotary Compressor

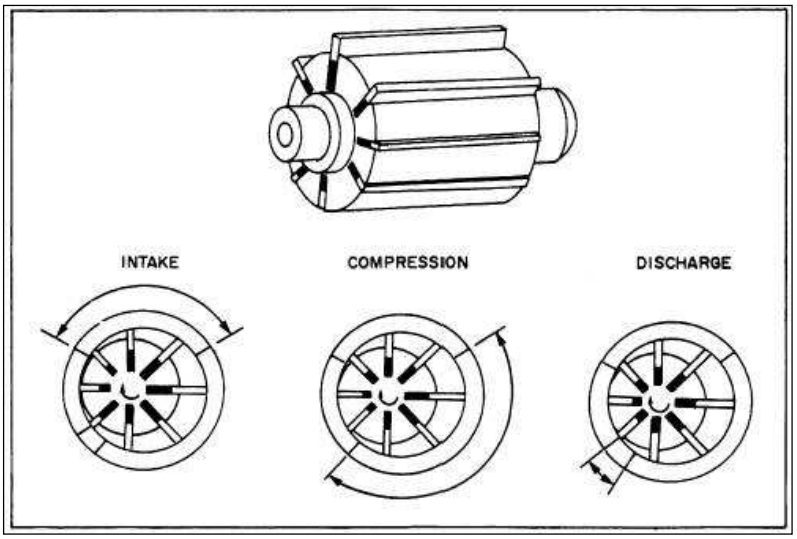

Each compressor type can have a different driver, which is the engine that drives the compressor. The driver could be electric, turbine, piston engine, or integral. Integral compressors are unique in that the compressor is integrated into the engine design. Essentially the two cannot be separated. Table 15-2 lists the number of compressors by type of compressor and primary driver.

Table 15-2: Number of Primary Drivers by Type

Type	Electric	Integral	Piston Engine	Turbine	Total
Centrifugal	18	PD	24	PD	47
Reciprocating	313	PD	516	PD	911
Rotary	83	PD	14	PD	97
Unknown	16	PD	0	PD	16
Totals:	**430**	**PD**	**554**	**PD**	**1,071**

Compressor starters also vary across the different types of compressors. Some natural gas compressor starters use natural gas expansion. These starters use high-pressure natural gas expanded across the starter to initiate the startup of the engine. The gas is then either vented to the atmosphere or recovered back into the sales line or routed to a flare. Table 15-3 lists the number of compressors by type of compressor and starters.

Table 15-3: Number of Starters by Type

Type	Electric	Gas Expansion - Instrument Air	Gas Expansion - Natural Gas	Total
Centrifugal	20	0	27	47
Reciprocating	367	52	492	911
Rotary	86	PD	PD	97
Unknown	16	PD	PD	16
Totals:	**489**	**54**	**528**	**1,071**

Compressor blowdowns are the depressurization of the compressor. The natural gas in the compressor chamber is either vented to atmosphere, flared, or recovered and piped back into the system. Table 15-4 lists the volumes of natural gas that are flared, recovered, or vented for both compressor blowdowns and natural gas expansion startups.

Table 15-4: Startup and Blowdown Volumes

Type	Flared (mcsf)	Recovered (mscf)	Vented (mscf)
Startup	821	42	4,196
Blowdown	9,835	26,246	189,062
Totals:	**10,657**	**26,288**	**193,259**

Emissions

Natural gas compressors have combustion, vented, and fugitive emissions. Combustion emissions were calculated from Table 5 of the 2007 Oil and Gas Industry Survey. They are included with the types of internal combustion engines listed in Chapter 7 of this report. Vented and fugitive emissions are calculated here.

Vented emissions are calculated from the volumes of gas released from startups and blowdowns. Fugitive emissions are calculated from the number and type of compressor seals, the hours of operation and seal-specific emission factors. These calculations are detailed in Appendix B. The CO_2 and CH_4, emissions are multiplied by their corresponding GWP numbers (1 for CO_2 and 21 for CH_4) to get the CO_2e values.

Table 15-5 lists the vented emissions from natural gas compressor startups, and Table 15-6 lists the vented emissions from blowdowns. The majority of the emissions come from reciprocating compressors. The compressor type "unknown" encompasses survey responses where "other" was checked but the type was not specified.

Table 15-5: Natural Gas Compressor Startup Vented Emissions (Metric Tons/Year)

Type	CO_2	CH_4	CO_2e	Percent of Total CO_2e
Reciprocating	4	68	1,438	98%
Rotary	0.08	0.87	18	1%
Centrifugal	0.01	0.26	6	0%
Unknown	0	0	0	0%
Totals:	**4**	**69**	**1,462**	

Table 15-6: Natural Gas Compressor Blowdown Vented Emissions (Metric Tons/Year)

Type	CO_2	CH_4	CO_2e	Percent of Total CO_2e
Reciprocating	170	3,210	67,578	99%
Centrifugal	0	17	358	1%
Rotary	1	11	229	0%
Unknown	0	0	0	0%
Totals:	**172**	**3,238**	**68,165**	

Table 15-7 lists the fugitive emissions from compressor seals. Again, reciprocating compressors account for the majority of the CO_2e emissions for this category.

Table 15-7: Natural Gas Compressor Fugitive Seal Emissions (Metric Tons/Year)

Type	CO_2	CH_4	CO_2e	Percent of Total CO_2e
Reciprocating	1,797	16,871	356,096	95%
Rotary	200	451	9,661	3%
Centrifugal	28	357	7,517	2%
Unknown	0	0	0	0%
Totals:	**2,025**	**17,679**	**373,274**	

Table 15-8 lists the combustion, vented, and fugitive emissions from all natural gas compressor units. The combustion emissions are from Table 5 of the Oil and Gas Industry Survey (Appendix A) and are categorized under internal combustion engines and turbines in Chapter 7 of this report. This table shows that combustion CO_2e emissions make up the majority of the emissions from this category while fugitive CO_2e account for the majority of the remaining 34 percent.

Table 15-8: Total Emissions of Natural Gas Compressors (Metric Tons/Year)

Type	CO_2	CH_4	N_2O	CO_2e	Percent of Total CO_2e
Combustion	782,515	4,210	19	876,891	66%
Vented	176	3,307	0	69,627	5%
Fugitive	2,025	17,679	0	373,274	28%
Totals:	**784,716**	**25,196**	**19**	**1,319,792**	

Table 15-9 shows the total compressor emissions by primary business type. These numbers include combustion, vented, and fugitive emissions. The business type "other" includes the following self-reported facility types:

- CNG compression and marketing,
- Cogeneration,
- Combined heat and power,
- Electricity generation,
- Portable heating ,
- Water disposal, and
- Vapor recovery services.

Table 15-9: Compressor Emissions by Primary Business (Metric Tons/Year)

Type	CO_2	CH_4	N_2O	CO_2e	Percent of Total CO_2e
Onshore Natural Gas	186,766	9,960	3	396,957	30%
Natural Gas Processing	289,705	4,449	5	384,674	29%
Natural Gas Storage	188,601	5,002	9	296,357	22%
Onshore Crude	116,310	4,506	2	211,517	16%
Offshore Crude	179	793	0	16,915	1%
PERP Equipment Owner	PD	PD	PD	PD	PD
Crude Processing	PD	PD	PD	PD	PD
Crude Pipeline	PD	PD	PD	PD	PD
Other	PD	PD	PD	PD	PD
Totals:	**784,716**	**25,196**	**19**	**1,319,792**	

Table 15-10 lists the total compressor emissions by type of compressor. Reciprocating compressors account for 89 percent of the total CO_2e emissions as well as 85 percent of the total number of compressors.

Table 15-10: Total Emissions of Natural Gas Compressors by Type (Metric Tons/Year)

Type	Number of Units	CO_2	CH_4	N_2O	CO_2e	Percent of Total CO_2e
Reciprocating	911	664,407	24,168	13	1,176,006	89%
Centrifugal	47	110,038	535	6	123,155	9%
Rotary	97	10,272	492	0	20,631	2%
Unknown	16	0	0	0	0	0%
Totals:	**1,071**	**784,716**	**25,196**	**19**	**1,319,792**	

Table 15-11 lists the total compressor emissions by type of primary driver. Piston engines and integral compressors account for 85 percent of total CO_2e emissions.

Table 15-11: Total Emissions of Natural Gas Compressors by Primary Driver (Metric Tons/Year)

Type	Number of Units	CO_2	CH_4	N_2O	CO_2e	Percent of Total CO_2e
Piston Engine	554	414,579	15,200	6	735,647	56%
Integral	81	281,453	4,687	7	382,146	29%
Electric	430	1,154	5,164	0	109,591	8%
Turbine	6	87,530	145	6	92,408	7%
Totals:	**1,071**	**784,716**	**25,196**	**19**	**1,319,792**	

Table 15-12 lists the total compressor emissions by type and age of the compressor. Sixty percent of the total emissions from this category are from reciprocating compressors that are over 30 years old or for which the age is unknown.

Table 15-12: Total Emissions of Natural Gas Compressors by Age (Metric Tons/Year)

Age	Number of Units	CO_2	CH_4	N_2O	CO_2e	Percent of Total CO_2e
Reciprocating						
Unknown	403	124,541	10,093	2	337,201	26%
< 5 Years	70	82,080	1,773	1	119,592	9%
5 - 10 Years	61	53,533	2,040	1	96,708	7%
10 - 20 Years	43	33,173	986	0	53,991	4%
20 - 30 Years	131	57,271	2,899	2	118,655	9%
> 30 Years	203	313,809	6,379	7	449,859	34%
Centrifugal						
Unknown	9	206	149	0	3,335	0%
< 5 Years	PD	PD	PD	PD	PD	PD
5 - 10 Years	0	0	0	0	0	0%
10 - 20 Years	16	8,407	155	0	11,713	1%
20 - 30 Years	PD	PD	PD	PD	PD	PD
> 30 Years	PD	PD	PD	PD	PD	PD
Rotary						
Unknown	44	3,082	255	0	8,451	1%
< 5 Years	34	6,856	41	0	7,733	1%
5 - 10 Years	PD	PD	PD	PD	PD	PD
10 - 20 Years	6	77	29	0	679	0%
20 - 30 Years	8	16	165	0	3,491	0%
> 30 Years	PD	PD	PD	PD	PD	PD
Unknown						
Unknown	16	0	0	0	0	0%
Totals:	**1,071**	**784,716**	**25,196**	**19**	**1,319,792**	

Table 15-3 lists the total number of hours and the average daily usage for each compressor type. This table shows that reciprocating compressors account for the majority of the hours of use.

Table 15-13: Usage of Natural Gas Compressors by Age

Age	Number of Units	Total Hours	Average Daily Hours
Reciprocating			
Unknown	403	2,400,079	16
< 5 Years	70	399,935	16
5 - 10 Years	61	296,475	13
10 - 20 Years	43	292,492	19
20 - 30 Years	131	773,125	16
> 30 Years	203	1,155,998	16
Subtotals:	*911*	*5,318,104*	*16*
Centrifugal			
Unknown	9	71,430	22
< 5 Years	PD	PD	PD
5 - 10 Years	0	0	0
10 - 20 Years	16	69,074	12
20 - 30 Years	PD	PD	PD
> 30 Years	PD	PD	PD
Subtotals:	*47*	*280,131*	*16*
Rotary			
Unknown	44	299,080	19
< 5 Years	34	256,124	21
5 - 10 Years	PD	PD	PD
10 - 20 Years	6	51,943	24
20 - 30 Years	8	61,320	21
> 30 Years	PD	PD	PD
Subtotals:	*97*	*682,396*	*19*
Unknown			
Unknown	16	140,160	24
Subtotals:	*16*	*140,160*	*24*
Totals:	**1,062**	**6,349,360**	**16**

Chapter 16 –Pipeline Pigging and Natural Gas Gathering Pipelines

Pipelines are used to transport crude oil and natural gas around the facility and throughout the state. This chapter only includes information about natural gas gathering system pipelines and pipeline pigging operations for both crude oil and natural gas. It does not include natural gas transmission or distribution pipelines. Table 13 of the 2007 Oil and Gas Industry Survey required facilities to provide the following information about their pipelines:

- Length of natural gas gathering system pipelines;
- Maintenance activities for natural gas gathering system pipelines;
  - Type and volume of natural gas vented, flared, or recovered; and
- Pigging operations
  - Number of crude oil and natural gas launchers and receivers
  - Number of types each launcher and receiver was opened
  - If launcher or receiver was purged with inert gas prior to being opened.

Pipelines in a natural gas gathering system are pipes of various sizes that move natural gas around the facility. They move the natural gas to combustion units, gas processing units, or to compressors to be put into transmission lines. Table 16-1 lists the number of miles of natural gas gathering system pipelines by primary business type. The business type “other” includes the following self-reported facility types:

- CNG compression and marketing,
- Cogeneration,
- Combined heat and power,
- Electricity generation,
- Portable heating ,
- Water disposal, and
- Vapor recovery services.

Table 16-1: Miles of Natural Gas Gathering System Pipelines by Primary Business Type

Primary Business	Miles of Natural Gas Gathering System Pipeline
Natural Gas Processing	1,124
Onshore Natural Gas	626
Onshore Crude	321
Natural Gas Storage	169
Offshore Crude	54
Crude Processing	PD
Other	PD
Totals:	**2,295**

Maintenance activities of these natural gas gathering systems encompass repairs or improvements that are done to the pipelines. These activities often result in natural gas being vented to the atmosphere. Table 16-2 lists the volumes of natural gas that were vented, recovered, or flared due to pipeline maintenance activities.

Table 16-2: Natural Gas Gathering System Pipeline Maintenance Activity Volumes

Type	Flared (mscf)	Recovered (mscf)	Vented (mscf)
Pipeline Gas	2,002	628,149	3,962
Associated Gas	349,193	1,379,138	180,340
Dry Gas	1,902	2,367,936	75
Totals:	**353,097**	**4,375,223**	**184,377**

Pigging refers to sending a device (a “pig”) through a pipeline to clean it. Pigging is used in both crude oil and natural gas pipelines. The natural gas pig launchers and receivers are pressurized with natural gas. This gas is either purged with an inert gas prior to opening, or the gas is vented to atmosphere. Table 16-3 lists the number of pig launchers/receivers and the number of openings.

Table 16-3: Pigging Operations

Type	Number of Launchers/Receivers	Number of Openings
Crude Oil	786	989
Natural Gas	146	1,417
Totals:	**932**	**2,406**

Emissions

Vented emissions are calculated from the amount of gas vented from natural gas gathering system maintenance activities, and the number of natural gas pigging operations. These are multiplied with an emission factor to yield emission estimates. No emission factor is available for crude oil pigging. Fugitive emissions are calculated from the miles of natural gas pipeline and an emission factor. These calculations are detailed in Appendix B. The CO_2 and CH_4 emissions are multiplied by their corresponding GWP numbers (1 for CO_2 and 21 for CH_4) to get the CO_2e values.

Table 16-4 lists the vented emissions from the natural gas gathering system maintenance activities and natural gas pigging operations. As shown, pipeline maintenance activities account for almost all of the vented emissions from pipelines.

Table 16-4: Natural Gas Vented Emissions from Gathering Pipeline Maintenance and Pigging Operations (Metric Tons/Year)

Type	CO_2	CH_4	CO_2e	Percent of Total CO_2e
Natural Gas Pipelines	2,659	2,490	54,940	100%
Natural Gas Pigging	104	5	211	0%
Totals:	**2,763**	**2,495**	**55,151**	

Table 16-5 lists the fugitive emissions from natural gas pipelines.

Table 16-5: Natural Gas Fugitive Emissions from Gathering Pipelines (Metric Tons/Year)

Type	CO_2	CH_4	CO_2e	Percent of Total CO_2e
Natural Gas Pipelines	327	867	18,541	100%
Totals:	**327**	**867**	**18,541**	

Chapter 17 – Separators

Separators are used to split the fluids that come out of a well. In crude oil fields, this fluid can be made of crude oil, natural gas, water, and other contaminants. In natural gas fields, this fluid can contain natural gas, water, and other contaminants. Table 14 of the 2007 Oil and Gas Industry Survey gathered information about separators. Facilities were required to submit the following information about their separators:

- Type
  - Free water knockout, heater/treater, horizontal separator, vertical separator, flow splitter, wemco, emulsion treater, or condensate tank
  - Facilities could also specify a type not listed above;
- Subtype
  - Bolted or welded;
- Size;
- Number of degassing events;
- Throughput in barrels crude oil per year or scf of natural gas per year;
- Crude oil API;
- Reactive organic gas (ROG) and total organic gas (TOG) emissions in tons/year
  - For working, breathing, and flashing losses
  - Average concentration of CH_4 and CO_2 in the vapor losses;
- Whether the separator had an access hatch or pressure relief valve
  - Were they counted in the components from Table 6 of the 2007 Oil and Gas Industry Survey;
- Vapor recovery system type
  - Flare, incinerator, collection system, or none
  - Facilities could also specify a type not listed above; and
- Vapor recovery system control efficiency.

Table 17-1 lists the number of separators by primary business type. The business type "crude processing" and "crude pipeline" were combined to protect confidential company data.

Table 17-1: Number of Separators by Primary Business Type

Primary Business	Number of Separators
Onshore Crude	3,228
Onshore Natural Gas	891
Natural Gas Processing	379
Natural Gas Storage	75
Offshore Crude	40
Crude Processing and Pipeline	5
Totals:	**4,618**

Emissions

Vented emissions are calculated from separator degassing events. This is where the separator is completely emptied of fluids and opened to atmosphere for cleaning or repair. Fugitive emissions are calculated from the total organic gas emissions from working, breathing, and flashing losses and the head space vapor concentrations. These equations are detailed in Appendix B. The CO_2 and CH_4 emissions are adjusted by the vapor recovery efficiency and then multiplied by their corresponding GWP numbers (1 for CO_2 and 21 for CH_4) to get the CO_2e values.

Table 17-2 lists the total vented and fugitive emissions from separators as reported in the survey. As shown, almost all of the emissions are fugitive.

Table 17-2: Total Emissions of Separators (Metric Tons/Year)

Type	CO_2	CH_4	CO_2e	Percent of Total CO_2e
Vented	0	1	24	1%
Fugitive	11	170	3,578	99%
Totals:	**11**	**171**	**3,602**	

Table 17-3 lists the fugitive emissions by type of separator. For approximately 90 percent of the separators reported, a value for ROG or TOG was not reported. Thus, emissions from separators are most likely underestimated. Some separator types were combined from what was listed on individual surveys to protect confidential company data and to aggregate similar equipment uses. Appendix E lists the categories and the types they represent.

Table 17-3: Fugitive Emissions of Separators by Type (Metric Tons/Year)

Type	Number of Units	CO_2	CH_4	CO_2e	Percent of Total CO_2e
Separator	715	0	68	1,435	40%
Shipping Tank	88	5	54	1,139	32%
Wash Tank	188	1	15	319	9%
Vertical Separator	604	1	14	288	8%
Produced Water Tank	130	1	8	160	4%
Crude Oil Separator	37	1	7	140	4%
Wemco	65	0	3	61	2%
Free Water Knockout	297	0	1	19	1%
Settling tanks	10	0	0	7	0%
Heater/Treater	309	0	0	5	0%
Stage Separator	88	0	0	2	0%
Horizontal Separator	1,046	0	0	1	0%
Condensate tank	81	0	0	0	0%
Gas Separator	102	0	0	0	0%
Surge Tank	9	0	0	0	0%
Scrubber	257	0	0	0	0%
Trap Separator	90	0	0	0	0%
Well Tester	502	0	0	0	0%
Totals:	**4,618**	**11**	**170**	**3,578**	

Seventy-two percent of the emissions come from the categories “separator” and “shipping tank”. The majority of separators in the category “separator” were not reported by a specific type. Shipping tanks are tanks that should have been listed on Table 16 of the 2007 Oil and Gas Industry Survey but were instead listed on Table 15.

Table 17-4 lists the fugitive emissions by subtype of separator. Bolted separators account for 57 percent of the emissions but only 12 percent of the total number. The subtype “unknown” is the next largest contributor to the total fugitive emissions.

Table 17-4: Fugitive Emissions of Separators by Subtype (Metric Tons/Year)

Type	Number of Units	CO_2	CH_4	CO_2e	Percent of Total CO_2e
Bolted	537	9	97	2,044	57%
Unknown	2,062	1	68	1,423	40%
Welded	1,999	0	5	111	3%
Both	PD	PD	PD	PD	PD
None	PD	PD	PD	PD	PD
Poly	PD	PD	PD	PD	PD
Riveted	PD	PD	PD	PD	PD
Totals:	**4,618**	**11**	**170**	**3,578**	

Table 17-5 lists the number of separator units with vapor recovery by type of separator. This table shows that, overall, 70 percent of separators have vapor recovery.

Table 17-5: Separator Units by Type Percent on Vapor Recovery

Type	Number of Units	Number on Vapor Recovery	Percent on Vapor Recovery
Scrubber	257	257	100%
Settling tanks	10	10	100%
Well Tester	502	500	100%
Surge Tank	9	8	89%
Stage Separator	88	78	89%
Gas Separator	102	90	88%
Wemco	65	56	86%
Trap Separator	90	74	82%
Horizontal Separator	1,046	819	78%
Free Water Knockout	297	209	70%
Condensate tank	81	52	64%
Heater/Treater	309	196	63%
Crude Oil Separator	37	23	62%
Vertical Separator	604	325	54%
Produced Water Tank	130	68	52%
Shipping Tank	88	43	49%
Separator	715	349	49%
Wash Tank	188	66	35%
Totals:	**4,618**	**3,223**	**70%**

Table 17-6 lists the number of separator units with vapor recovery by subtype of separator. For both the welded and bolted subtype, about 50 percent have vapor

recovery. The subtype "unknown" has 96 percent with vapor recovery. The percentages for the remaining subtypes are not shown due to protected data.

Table 17-6: Separator Units by Subtype Percent with Vapor Recovery

Type	Number of Units	Number with Vapor Recovery	Percent with Vapor Recovery
Unknown	2,062	1,975	96%
Bolted	537	275	51%
Welded	1,999	966	48%
Both	PD	PD	PD
Riveted	PD	PD	PD
None	PD	PD	PD
Poly	PD	PD	PD
Totals:	**4,618**	**3,223**	**70%**

Table 17-7 lists the types of vapor recovery units used on separators. Some vapor recovery types were combined from what was listed on individual surveys to protect confidential company data and to aggregate similar pieces of equipment. Below is a list of equipment categories and the types they represent:

- Flare – flares, flares/collection systems, flares/collection systems/combustion equipment;
- Combustion Unit – steam generators, pump engines, oil heaters, gas plants, and boilers; and
- Collection System – compressors, collection systems, disposal wells, pressure vessels, fuel gas systems, and carbon adsorbers.

This table shows that 65 percent of the total number of separators uses a collection system for vapor recovery. Four percent send the vapors directly to a flare, incinerator, or combustion unit. The remaining 30 percent have no vapor recovery unit.

Table 17-7: Separator Units by Types of Vapor Recovery

Type	Number of Units	Percent of Total
Collection System	3,019	65%
None	1,405	30%
Flare	105	2%
Incinerator	55	1%
Combustion Unit	34	1%
Totals:	**4,618**	

Chapter 18 – Crude Oil Sumps and Pits

Crude oil sumps and pits are open pits that are used for oil/water separation or for emergency containment. Table 15 of the 2007 Oil and Gas Industry Survey gathered information about sumps and pits. Facilities were required to submit the following information about their sump/pits:

- Level
  - Primary, secondary, tertiary;
- Crude oil API;
- Number of days in use;
- Dimensions
  - Area and depth;
- Vapor recovery system type
  - Flare, incinerator, collection system, cover, or none
  - Facilities could also specify a type not listed above; and
- Vapor recovery system control efficiency.

Primary sumps/pits contain crude oil emulsions straight from the well. The liquids have not gone through any separation. Secondary sumps/pits contain emulsions that have gone through separation and thus contain mostly water and very little crude oil. Tertiary sumps/pits are primarily water.

Emissions

Fugitive emissions from sumps/pits are calculated using emission factors based on the type, area, and the days of use of the sump. These equations are detailed in Appendix B. The CO_2 and CH_4 emissions are adjusted by the vapor recovery efficiency and then multiplied by their corresponding GWP numbers (1 for CO_2 and 21 for CH_4) to get the CO_2e values.

Table 18-1 lists the fugitive emissions by type of sump/pit. About half the emissions are from primary sumps/pits. The remaining half is split between secondary and tertiary sumps/pits.

Table 18-1: Fugitive Emissions of Sumps/Pits by Type (Metric Tons/Year)

Type	Number of Sumps	CH_4	CO_2e	Percent of Total CO_2e
Primary	62	128	2,678	48%
Secondary	94	80	1,674	30%
Tertiary	94	57	1,200	22%
Totals:	**250**	**264**	**5,552**	

Table 18-2 lists the fugitive emissions by type of sump/pit for each air district. Only seven air districts contain sump/pits. Most of the CO_2e emissions from sumps/pits are in the San Joaquin Valley and Santa Barbara County air districts.

Table 18-2: Fugitive Emissions of Sumps/Pits by Air District (Metric Tons/Year)

Air District	Type	Number of Sumps	CH_4	CO_2e
Bay Area AQMD	Secondary	PD	PD	PD
Monterey Bay Unified APCD	Secondary	PD	PD	PD
Santa Barbara County APCD	Primary	36	76	1,587
	Secondary	29	39	826
	Tertiary	15	2	40
South Coast AQMD	Primary	PD	PD	PD
	Secondary	27	1	18
	Tertiary	34	0	5
San Joaquin Valley APCD	Primary	14	46	971
	Secondary	18	18	372
	Tertiary	30	55	1,151
San Luis Obispo County APCD	Tertiary	PD	PD	PD
Ventura County APCD	Primary	PD	PD	PD
	Secondary	17	5	100
	Tertiary	14	0	4
Totals:		**250**	**264**	**5,552**

Table 18-3 lists the number of sumps/pits with vapor recovery. Less than 20 percent of the primary sumps/pits have vapor recovery. Overall, only 50 percent of all sumps/pits have vapor recovery.

Table 18-3: Sumps/Pits by Percent on Vapor Recovery

Type	Number of Units	Number on Vapor Recovery	Percent on Vapor Recovery
Primary	62	12	19%
Secondary	88	75	80%
Tertiary	94	38	40%
Totals:	**250**	**125**	**50%**

Table 18-4 lists the types of vapor recovery used on sumps/pits. Some vapor recovery types were combined from what was listed on individual surveys to protect confidential company data and to aggregate similar pieces of equipment. Below is a list of equipment categories and the types they represent:

- Collection System – compressors, collection systems, tanks, and carbon adsorbers; and
- Cover – covers, covers and pressure relief devices, and covers and activated carbon.

This table shows most of the sumps/pits that have vapor recovery use either a cover or a collection system. The remaining sumps/pits have no vapor recovery.

Table 18-4: Sumps/Pits by Types of Vapor Recovery

Type	Number of Units	Percent of Total
None	125	50%
Cover	73	29%
Collection System	48	19%
Flare	PD	PD
Incinerator	PD	PD
Totals:	**250**	

Chapter 19 – Crude Oil Storage Tanks

Crude oil storage tanks store crude oil before it's transported to a refinery for processing. They can be located on crude oil extraction sites, at tank farms, along pipelines, or at the refinery. Table 16 of the 2007 Oil and Gas Industry Survey collected information about crude oil storage tanks. Storage tanks at refineries were not included. Facilities were required to submit the following information about their tanks:

- Type
  - Fixed roof, internal floating roof, external floating roof, or open top roof;
- Subtype
  - Bolted or welded;
- Size in barrels;
- Number of degassing events;
- Average crude oil API gravity;
- Reactive organic gas (ROG) and total organic gas (TOG) emissions in tons/year
  - For working, breathing, and flashing losses
  - Average concentration of CH_4 and CO_2 in the vapor losses;
- Whether the storage tank had an access hatch or pressure relief valve
  - Were they counted in the components from Table 6 of the 2007 Oil and Gas Industry Survey;
- For floating roof tanks only
  - Deck leg height in feet
  - Tank diameter in feet
  - Primary seal type
  - Secondary seal type;
- Vapor recovery system type
  - Flare, incinerator, collection system, or none
  - Facilities could also specify a type not listed above; and
- Vapor recovery system control efficiency.

Emissions

Vented emissions are calculated from storage tank degassing events. This is where the storage tank is completely emptied of fluids and opened to atmosphere for cleaning or repair. Fugitive emissions are calculated from the total organic gas emissions from working, breathing, and flashing losses and the head space vapor concentrations. These equations are detailed in Appendix B. The CO_2 and CH_4 emissions are adjusted by the vapor recovery efficiency and then multiplied by their corresponding GWP numbers (1 for CO_2 and 21 for CH_4) to get the CO_2e values.

Table 19-1 lists the total vented and fugitive emissions from storage tanks. As shown, nearly all of the emissions are fugitive.

Table 19-1: Total Emissions of Storage Tanks (Metric Tons/Year)

Type	CO_2	CH_4	CO_2e	Percent of Total CO_2e
Vented	0	5	109	0%
Fugitive	1,084	11,501	242,594	100%
Totals:	**1,084**	**11,506**	**242,703**	

Table 19-2 lists the fugitive emissions by tank type. Most of the emissions are from fixed roof storage tanks. Fixed roof tanks also account for 94 percent of the total number of storage tanks in California. Approximately 65 percent of the storage tanks reported did not have a value reported for ROG or TOG. Thus, emissions for storage tanks are most likely underestimated.

Table 19-2: Fugitive Emissions of Storage Tanks by Type (Metric Tons/Year)

Type	Number of Units	CO_2	CH_4	CO_2e	Percent of Total CO_2e
Fixed Roof	3,417	993	9,795	206,683	85%
Internal Floating Roof	34	71	1,492	31,396	13%
External Floating Roof	138	18	193	4,063	2%
Open Top Roof	37	2	16	348	0%
Unknown	13	0	5	105	0%
Totals:	**3,639**	**1,084**	**11,501**	**242,594**	

Table 19-3 lists the fugitive emissions by subtype. Bolted tanks account for 80 percent of the total fugitive emissions and 61 percent of the total number of storage tanks.

Table 19-3: Fugitive Emissions of Storage Tanks by Subtype (Metric Tons/Year)

Type	Number of Units	CO_2	CH_4	CO_2e	Percent of Total CO_2e
Bolted	2,220	937	9,239	194,960	80%
Welded	694	141	1,463	30,874	13%
Unknown	653	5	785	16,480	7%
Riveted	PD	PD	PD	PD	PD
Steel	PD	PD	PD	PD	PD
Poly	PD	PD	PD	PD	PD
Open Top	PD	PD	PD	PD	PD
Totals:	**3,639**	**1,084**	**11,501**	**242,594**	

Table 19-4 lists the number of storage tanks that have vapor recovery by the type of tank. As shown, less than half of the fixed roof tanks have vapor recovery. Floating roof tanks, both internal and external, are considered a type of vapor recovery system for a storage tank. They typically will not have an additional vapor recovery system. Overall, only 45 percent of all the storage tanks have vapor recovery units.

Table 19-4: Storage Tanks by Type Percent with Vapor Recovery

Type	Number of Units	Number with Vapor Recovery	Percent with Vapor Recovery
Unknown	13	10	77%
Fixed Roof	3,417	1,579	46%
Internal Floating Roof	34	10	29%
External Floating Roof	138	40	29%
Open Top Roof	37	9	24%
Totals:	**3,639**	**1,648**	**45%**

Table 19-5 lists the number of storage tanks that have vapor recovery by subtype. Sixty percent of the welded tanks and 44 percent of the bolted tanks have vapor recovery units.

Table 19-5: Storage Tanks by Subtype Percent with Vapor Recovery

Type	Number of Units	Number with Vapor Recovery	Percent with Vapor Recovery
Welded	694	415	60%
Bolted	2,220	970	44%
Unknown	653	208	32%
Steel	PD	PD	PD
Poly	PD	PD	PD
Riveted	PD	PD	PD
Open Top	PD	PD	PD
Totals:	**3,639**	**1,648**	**45%**

Table 19-6 lists the type of vapor recovery systems used on storage tanks. Some vapor recovery types were combined from what was listed on individual surveys to protect confidential company data and to aggregate similar pieces of equipment. Below is a list of equipment categories and the types they represent:

- Flare – flares, flares/collection systems, flares/collection systems/combustion equipment;
- Combustion Unit – boilers, gas plants, heaters, heater/treaters, and steam generators; and
- Collection System – collection system, carbon adsorber, compressor, and disposal well.

As shown, most of the storage tanks with vapor recovery utilize collection systems.

Table 19-6: Storage Tanks by Types of Vapor Recovery

Type	Number of Units	Percent of Total
None	2,019	55%
Collection System	1,313	36%
Flare	131	4%
Combustion Unit	61	2%
Incinerator	61	2%
Unknown	54	1%
Totals:	**3,639**	

Chapter 20 – Overview of California Emissions from Crude Oil Production, Processing, and Storage

Total Crude Oil Emissions

This chapter gives an overview of emissions from crude oil production, processing, and storage. This encompasses the primary business types: onshore crude production, offshore crude production, crude processing, crude storage, and crude pipelines. These categories account for 62 percent of California's statewide GHG emissions from the oil and gas sector. As can be seen in Table 20-1, most of the emissions come from combustion sources.

Table 20-1: Crude Oil Emissions (Metric Tons/Year)

Type	CO_2	CH_4	N_2O	CO_2e	Percent of Total CO_2e
Combustion	10,109,202	6,737	186	10,308,317	94%
Vented	34,848	5,868	0	158,077	1%
Fugitive	45,939	22,283	0	513,874	5%
Totals:	**10,189,989**	**34,888**	**186**	**10,980,268**	

The emissions in Table 20-1 do not include 13 cogeneration units that supply steam to oil fields but do not have any production associated with them. They were listed under the primary business type "other" and their emissions are included in Chapter 8 of this report.

Table 20-2 lists the combustion, vented, and fugitive emissions for crude oil facilities by primary business type. The primary business types crude oil processing and crude oil storage were combined to protect confidential data. Most of the emissions are from onshore crude oil production facilities. The remaining 6 percent of the emissions are from offshore production, processing, storage, and pipelines.

Table 20-2: Crude Oil Emissions by Primary Business Type (Metric Tons/Year)

Type	Number of Facilities	Combustion (CO_2e)	Vented (CO_2e)	Fugitive (CO_2e)	Total CO_2e	Percent of Total CO_2e
Onshore Crude Production	668	9,784,578	125,428	433,082	10,343,089	94%
Crude Processing and Storage	42	346,952	15,940	44,347	407,239	4%
Offshore Crude Production	16	104,272	16,708	19,138	140,118	1%
Crude Pipeline	65	72,515	0	17,306	89,821	1%
Totals:	**791**	**10,308,317**	**158,077**	**513,874**	**10,980,268**	

Total CO_2e emissions were calculated for each facility. The facilities were then categorized into ranges of CO_2e emissions. Table 20-3 lists the number of facilities in each range and the total CO_2e emissions for the facilities in that range. As this table shows, 83 percent of the emissions come from two percent of the facilities.

Table 20-3: Crude Oil Total Emissions by CO_2e Range (Metric Tons/Year)

Range (CO_2e per Facility)	Number of Facilities	CO_2e	Percent of Total CO_2e
< 10,000	732	438,940	4%
10,000 to 25,000	20	314,565	3%
25,000 to 50,000	13	476,097	4%
50,000 to 100,000	9	653,132	6%
100,000 to 500,000	11	2,475,235	23%
> 500,000	6	6,622,297	60%
Totals:	**791**	**10,980,268**	

Tables 20-4, 20-5, and 20-6 list the number of facilities and total CO_2e emissions for combustion, vented, and fugitive sources. These tables are similar to Table 20-3 in that the majority of the emissions come from a small fraction of the facilities.

Table 20-4: Crude Oil Combustion Emissions by CO_2e Range (Metric Tons/Year)

Range (CO_2e per Facility)	Number of Facilities	CO_2e	Percent of Total CO_2e
< 10,000	742	337,672	3%
10,000 to 25,000	15	231,994	2%
25,000 to 50,000	12	454,116	4%
50,000 to 100,000	6	449,261	4%
100,000 to 500,000	10	2,254,854	22%
> 500,000	6	6,580,418	64%
Totals:	**791**	**10,308,317**	

Tables 20-5 and 20-6 list the number of facilities and total CO_2e emissions for vented and fugitive emissions separately. With the combustion emissions removed, the range of CO_2e values is much smaller. The majority of the facilities fall in the “less than 1,000 metric ton CO_2e per year” range, while a small fraction of the facilities account for a majority of the GHG emissions.

Table 20-5: Crude Oil Vented Emissions by CO_2e Range (Metric Tons/Year)

Range (CO_2e per Facility)	Number of Facilities	CO_2e	Percent of Total CO_2e
<1,000	776	17,152	11%
1,000 to 5,000	9	20,571	13%
5,000 to 10,000	PD	PD	PD
10,000 to 25,000	PD	PD	PD
> 25,000	PD	PD	PD
Totals:	**791**	**158,077**	

Table 20-6: Crude Oil Fugitive Emissions by CO_2e Range (Metric Tons/Year)

Range (CO_2e per Facility)	Number of Facilities	CO_2e	Percent of Total CO_2e
< 1,000	734	76,445	15%
1,000 to 5,000	40	74,675	15%
5,000 to 10,000	8	60,736	12%
10,000 to 25,000	PD	PD	PD
> 25,000	PD	PD	PD
Totals:	**791**	**513,874**	

Average Emissions per Barrel Produced

This section includes emissions from onshore and offshore crude production. A way to classify facilities is to determine their average total CO_2e emissions per barrel of crude oil produced. This can be calculated in two ways, as a facility average and as a production-weighted average.

Facility Average

The average CO_2e emissions per barrel of crude oil produced was calculated for each facility by dividing the facility's total CO_2e emissions by its total production. Those values were then averaged for each range of production, as a facility average and as a production-weighted average.

$$\text{Avg. } CO_2e/bbl_{range} = \sum[(CO_2e/bbl_{facility})]_{range}/\text{number facilities}_{range}$$

Production-Weighted Average

The average CO_2e emissions per barrel of crude production was calculated by summing the total CO_2e emissions for each range of production and dividing it by the total barrels produced in that range.

$$\text{Avg. } CO_2e/bbl_{range} = (\text{total } CO_2e_{range})/(\text{total } bbl_{range})$$

The above calculations were done for total emissions and combustion, vented, and fugitive emissions separately. Table 20-7 shows the average CO_2e emissions per barrel for total emissions. The range "not reported" includes facilities that listed themselves as crude production but did not fill out their crude oil production for 2007. Most of the CO_2e emissions per barrel numbers are very close with the exception of the range 10,000 to 25,000. This range is skewed upwards due to facilities generating electricity as well as producing crude oil.

Table 20-7: Average Total CO_2e Emissions per Barrel Crude Oil Produced (Metric Tons/Year)

Range (Barrels Crude Oil produced per Year)	Number of Facilities	Total Barrels of Crude Oil Produced	Total CO_2e	Facility Average CO_2e per Barrel	Production Weighted Average CO_2e per Barrel
Not Reported	87	Not Reported	208,300	N/A	N/A
< 1,000	87	42,720	3,444	0.12	0.08
1,000 to 10,000	238	961,326	36,480	0.04	0.04
10,000 to 25,000	84	1,267,662	273,644	0.31	0.22
25,000 to 50,000	57	2,093,042	72,740	0.04	0.03
50,000 to 75,000	21	1,344,532	101,704	0.07	0.08
75,000 to 100,000	11	896,802	16,528	0.02	0.02
> 100,000	99	227,371,062	9,770,367	0.05	0.04
Totals:	**684**	**233,977,146**	**10,483,207**	**0.08**	**0.04**

Table 20-8 shows the average CO_2e emissions per barrel for combustion emissions only. Most of the ranges are relatively similar except for the 10,000 to 25,000 range. Again, this is due to facilities generating electricity as well as producing crude oil.

Table 20-8: Average Combustion CO_2e Emissions per Barrel Crude Oil Produced (Metric Tons/Year)

Range (Barrels Crude Oil produced per Year)	Number of Facilities	Total Barrels of Crude Oil Produced	Total CO_2e	Facility Average CO_2e per Barrel	Production Weighted Average CO_2e per Barrel
Not Reported	87	Not Reported	176,148	N/A	N/A
< 1,000	87	42,720	1,267	0.03	0.03
1,000 to 10,000	238	961,326	25,122	0.03	0.03
10,000 to 25,000	84	1,267,662	258,871	0.30	0.20
25,000 to 50,000	57	2,093,042	39,504	0.02	0.02
50,000 to 75,000	21	1,344,532	92,469	0.07	0.07
75,000 to 100,000	11	896,802	4,782	0.01	0.01
> 100,000	99	227,371,062	9,290,688	0.03	0.04
Totals:	**684**	**233,977,146**	**9,888,850**	**0.06**	**0.04**

Table 20-9 shows that vented CO_2e emissions per barrel produced are relatively consistent for all ranges of production.

Table 20-9: Average Vented CO_2e Emissions per Barrel Crude Oil Produced (Metric Tons/Year)

Range (Barrels Crude Oil produced per Year)	Number of Facilities	Total Barrels of Crude Oil Produced	Total CO_2e	Facility Average CO_2e per Barrel	Production Weighted Average CO_2e per Barrel
Not Reported	87	Not Reported	15,848	N/A	N/A
< 1,000	87	42,720	113	0.0025	0.0027
1,000 to 10,000	238	961,326	1,846	0.0019	0.0019
10,000 to 25,000	84	1,267,662	1,312	0.0010	0.0010
25,000 to 50,000	57	2,093,042	2,213	0.0011	0.0011
50,000 to 75,000	21	1,344,532	1,616	0.0012	0.0012
75,000 to 100,000	11	896,802	381	0.0004	0.0004
> 100,000	99	227,371,062	118,807	0.0049	0.0005
Totals:	**684**	**233,977,146**	**142,137**	**0.0019**	**0.0006**

Table 20-10 shows the CO_2e emissions per barrel for fugitive emissions only. The high average CO_2e emission per barrel for the < 1,000 range is due to a number of facilities that produce less than 1 barrel of crude oil per day.

Table 20-10: Average Fugitive CO_2e Emissions per Barrel Crude Oil Produced (Metric Tons/Year)

Range (Barrels Crude Oil produced per Year)	Number of Facilities	Total Barrels of Crude Oil Produced	Total CO_2e	Facility Average CO_2e per Barrel	Production Weighted Average CO_2e per Barrel
Not Reported	87	Not Reported	16,303	N/A	N/A
< 1,000	87	42,720	2,064	0.088	0.048
1,000 to 10,000	238	961,326	9,512	0.011	0.010
10,000 to 25,000	84	1,267,662	13,461	0.010	0.011
25,000 to 50,000	57	2,093,042	31,023	0.017	0.015
50,000 to 75,000	21	1,344,532	7,619	0.005	0.006
75,000 to 100,000	11	896,802	11,366	0.011	0.013
> 100,000	99	227,371,062	360,873	0.010	0.002
Totals:	**684**	**233,977,146**	**452,220**	**0.020**	**0.002**

Chapter 21 – Overview of California Emissions from Dry Natural Gas Production, Processing, and Storage

Total Natural Gas Emissions

This chapter gives an overview of natural gas production, processing, and storage. This encompasses the primary business types: onshore natural gas production, natural gas processing, and natural gas storage. These categories account for 11 percent of California's statewide GHG emissions from the oil and gas sector. As can be seen in Table 21-1, about 70 percent of the emissions come from combustion sources and about a third come from vented and fugitive sources.

Table 21-1: Natural Gas Emissions (Metric Tons/Year)

Type	CO_2	CH_4	N_2O	CO_2e	Percent of Total CO_2e
Combustion	1,237,087	3,918	18	1,325,080	69%
Vented	21,160	10,063	0	232,473	12%
Fugitive	61,322	14,620	0	368,335	19%
Totals:	**1,319,569**	**28,601**	**18**	**1,925,888**	

Table 21-2 lists the combustion, vented, and fugitive emissions for natural gas facilities. About half of the emissions come from natural gas processing. The remaining emissions are split between onshore gas production and natural gas storage.

Table 21-2: Natural Gas Emissions by Primary Business Type (Metric Tons/Year)

Type	Number of Facilities	Combustion (CO_2e)	Vented (CO_2e)	Fugitive (CO_2e)	Total CO_2e	Percent of Total CO_2e
Natural Gas Processing	17	879,601	24,102	139,698	1,043,400	54%
Onshore Natural Gas	703	218,910	117,835	210,879	547,624	28%
Natural Gas Storage	10	226,569	90,537	17,758	334,864	17%
Totals:	**730**	**1,325,080**	**232,473**	**368,335**	**1,925,888**	

"Natural gas processing" covers facilities that only process gas but do not extract gas. They are generally referred to as gas plants. Many extraction facilities have gas processing equipment onsite while others send their gas to gas plants.

The CO_2e emissions were calculated for each facility. The facilities were then categorized into ranges of CO_2e emissions. Table 21-3 lists the number of facilities in each range and the CO_2e emissions for the facilities in that range. As this table shows, about 75 percent of the emissions come from about 2 percent of the facilities.

Table 21-3: Total Natural Gas Emissions by CO_2e Range (Metric Tons/Year)

Range (CO_2e per Facility)	Number of Facilities	CO_2e	Percent of Total CO_2e
< 1,000	580	154,516	8%
1,000 to 5,000	118	231,265	12%
5,000 to 10,000	15	106,265	6%
10,000 to 25,000	6	87,945	5%
> 25,000	11	1,345,898	70%
Totals:	**730**	**1,925,888**	

Table 21-4 lists the number of facilities in each range and the total combustion CO_2e emissions for all the facilities in that range. Again, most of the emissions come from a small fraction of the facilities. Most of the facilities fall into the < 1,000 CO_2e range.

Table 21-4: Natural Gas Combustion Emissions by CO_2e Range (Metric Tons/Year)

Range (CO_2e per Facility)	Number of Facilities	CO_2e	Percent of Total CO_2e
< 1,000	679	70,852	5%
1,000 to 5,000	31	67,690	5%
5,000 to 10,000	5	31,319	2%
10,000 to 25,000	8	117,233	9%
> 25,000	7	1,037,986	78%
Totals:	**730**	**1,325,080**	

Tables 21-5 and 21-6 show the number of facilities and the total CO_2e emissions for vented and fugitive sources separately. Information for three ranges is listed as “PD” to protect confidential data.

Table 21-5: Natural Gas Vented Emissions by CO_2e Range (Metric Tons/Year)

Range (CO_2e per Facility)	Number of Facilities	CO_2e	Percent of Total CO_2e
<1,000	700	82,528	35%
1,000 to 5,000	25	48,270	21%
5,000 to 10,000	PD	PD	PD
10,000 to 25,000	PD	PD	PD
> 25,000	PD	PD	PD
Totals:	**730**	**232,473**	

Table 21-6: Natural Gas Fugitive Emissions by CO_2e Range (Metric Tons/Year)

Range (CO_2e per Facility)	Number of Facilities	CO_2e	Percent of Total CO_2e
< 1,000	661	118,093	32%
1,000 to 5,000	64	114,820	31%
5,000 to 10,000	PD	PD	PD
10,000 to 25,000	PD	PD	PD
> 25,000	PD	PD	PD
Totals:	**730**	**368,335**	

Average Emissions per MSCF Produced

This section includes emissions from onshore and offshore natural gas production. A way to classify facilities is to determine their average total CO_2e emissions per thousand cubic feet (mscf) of natural gas produced. This can be calculated in two ways.

Facility Average

The average CO_2e emissions per mscf natural gas produced was calculated for each facility by dividing the facility's total CO_2e emissions by its total production. Those values were then averaged for each range of production.

$$\text{Avg. } CO_2e/mscf_{range} = \sum[(CO_2e/mscf_{facility})]_{range}/\text{number facilities}_{range}$$

Production – Weighted Average

The average CO_2e emissions per mscf natural gas production was calculated by summing the total CO_2e emissions for each range of production and dividing it by the total mscf produced in that range.

$$\text{Avg. } CO_2e/mscf_{range} = (\text{total } CO_2e_{range})/(\text{total } mscf_{range})$$

The above calculations were done for total emissions and combustion, vented, and fugitive emissions separately. Table 21-7 shows the average CO_2e emissions per mscf for total emissions. The range "not reported" includes facilities that listed themselves as natural gas production but did not fill out their natural gas production for 2007.
Table 21-7 shows that most of the ranges have similar average CO_2e emissions per mscf of natural gas produced except for the two lowest ranges. The "< 1,000 mscf" range has several facilities that produce less than one mscf of natural gas. This artificially increases the CO_2e emissions per mscf. The "1,000 to 50,000 mscf" range is larger than the remaining ranges due to several facilities with compressors onsite.

Table 21-7: Average Total CO_2e Emissions per MSCF Natural Gas Produced (Metric Tons/Year)

Range (MSCF Natural Gas Produced per Year)	Number of Facilities	Total MSCF of Natural Gas Produced	Total CO_2e	Facility Weighted Average CO_2e per MSCF	Production Weighted Average CO_2e per MSCF
Not Reported	31	Not Reported	50,656	N/A	N/A
< 1,000	57	5,196	1,023	25.438	0.197
1,000 to 50,000	329	9,181,032	202,829	0.052	0.022
50,000 to 250,000	242	34,859,306	252,624	0.007	0.007
250,000 to 500,000	35	10,830,889	27,687	0.003	0.003
> 500,000	9	13,178,870	12,805	0.001	0.001
Totals:	**703**	**68,055,293**	**547,624**	**2.090**	**0.008**

Table 21-8 lists the average CO_2e emissions per mscf natural gas produced for combustion emissions by range of production. Here, the bottom two ranges have higher CO_2e per mscf values due to the reasons stated above for Table 21-7.

Table 21-8: Average Combustion CO_2e Emissions per MSCF Natural Gas Produced (Metric Tons/Year)

Range (MSCF Natural Gas Produced per Year)	Number of Facilities	Total MSCF of Natural Gas Produced	Total CO_2e	Facility Weighted Average CO_2e per MSCF	Production Weighted Average CO_2e per MSCF
Not Reported	31	Not Reported	36,316	N/A	N/A
< 1,000	57	5,196	178	0.0056	0.0343
1,000 to 50,000	329	9,181,032	108,511	0.0227	0.0118
50,000 to 250,000	242	34,859,306	59,464	0.0018	0.0017
250,000 to 500,000	35	10,830,889	7,777	0.0008	0.0007
> 500,000	9	13,178,870	6,664	0.0003	0.0005
Totals:	**703**	**68,055,293**	**218,910**	**0.0118**	**0.0032**

Tables 21-9 and 21-10 detail the average CO_2e emissions per mscf of natural gas produced for vented and fugitive emissions. In both these tables, the range "< 1,000 mscf" range is higher due to several facilities producing less than one mscf of natural gas.

Table 21-9: Average Vented CO_2e Emissions per MSCF Natural Gas Produced (Metric Tons/Year)

Range (MSCF Natural Gas Produced per Year)	Number of Facilities	Total MSCF of Natural Gas Produced	Total CO_2e	Facility Weighted Average CO_2e per MSCF	Production Weighted Average CO_2e per MSCF
Not Reported	31	Not Reported	4,434	N/A	N/A
< 1,000	57	5,196	609	1.0773	0.1172
1,000 to 50,000	329	9,181,032	30,316	0.0097	0.0033
50,000 to 250,000	242	34,859,306	71,806	0.0020	0.0021
250,000 to 500,000	35	10,830,889	6,308	0.0006	0.0006
> 500,000	9	13,178,870	4,361	0.0001	0.0003
Totals:	**703**	**68,055,293**	**117,835**	**0.0926**	**0.0017**

Table 21-10: Average Fugitive CO_2e Emissions per MSCF Natural Gas Produced (Metric Tons/Year)

Range (MSCF Natural Gas Produced per Year)	Number of Facilities	Total MSCF of Natural Gas Produced	Total CO_2e	Facility Weighted Average CO_2e per MSCF	Production Weighted Average CO_2e per MSCF
Not Reported	31	Not Reported	9,907	N/A	N/A
< 1,000	57	5,196	236	24.3552	0.0454
1,000 to 50,000	329	9,181,032	64,001	0.0196	0.0070
50,000 to 250,000	242	34,859,306	121,354	0.0037	0.0035
250,000 to 500,000	35	10,830,889	13,601	0.0013	0.0013
> 500,000	9	13,178,870	1,780	0.0001	0.0001
Totals:	**703**	**68,055,293**	**210,879**	**1.9852**	**0.0031**

Appendix A: 2007 Oil and Gas Industry Survey

California Air Resources Board
Oil and Gas Industry Survey

Air Resources Board

Mary D. Nichols, Chairman
1001 I Street • P.O. Box 2815
Sacramento, California 95812 • www.arb.ca.gov

Linda S. Adams
Secretary for Environmental Protection

Arnold Schwarzenegger
Governor

February 17, 2009

Dear Sir or Madam:

The Air Resources Board (ARB) is requesting your participation in a survey of the oil and natural gas sector. This sector includes oil and gas extraction, processing, storage, and crude oil pipelines. The purpose of this survey is to improve our current estimate of greenhouse gas emissions in California. Gathering this information is part of our responsibilities under AB 32, the California Global Warming Solutions Act of 2006 (California Health and Safety Code section 38500 to 38599). Due to the wide range of operations in this sector, your participation is important to help us make accurate estimates.

We have designed the enclosed survey in a table format. We will also accept electronic data transfers and have included both Microsoft Excel and Access templates on the enclosed compact disc for your convenience. Please see the enclosed instructions for assistance and to locate staff who can answer specific questions.

Pursuant to California state law, **completion and submittal of this survey is a mandatory requirement**. The information being requested is for use by the ARB to develop a baseline greenhouse gas emissions inventory. This request for information is made pursuant to sections 39607, 39701, and 41511 of the California Health and Safety Code, and Title 17, California Code of Regulations, section 91100. These sections authorize the ARB to require the submission of information needed to estimate atmospheric emissions and to carry out its other statutory responsibilities.

All data will be protected as confidential in accordance with Title 17, California Code of Regulations, section 91000 to 91022 and the California Public Records Act (Government Code section 6250 et seq.).

We appreciate your participation and are available to provide assistance. Please submit the completed survey or electronic data transfers by **April 30, 2009**.

The energy challenge facing California is real. Every Californian needs to take immediate action to reduce energy consumption. For a list of simple ways you can reduce demand and cut your energy costs, see our website: http://www.arb.ca.gov.

California Environmental Protection Agency

Printed on Recycled Paper

Sir or Madam
February 17, 2009
Page 2

For general questions, please contact Joseph Fischer at (916) 445-0071 or via e-mail at joseph.fischer@arb.ca.gov. For additional information, or to sign up for our automatic e-mail notification system, please visit http://www.arb.ca.gov/oil-gas/oil-gas.htm.

Sincerely,

Barbara Fry, Chief
Measures Assessment Branch
Stationary Source Division

cc: Mr. Joseph Fischer
Air Resources Engineer

Enclosures

California Air Resources Board
Oil and Gas Industry Survey

For additional information related to this survey, please see accompanying

General Instructions.

Reporting Year 2007

Table 1: Facility Description

Company Name:		
Facility Name:	Air District:	
Address:		
City:	State:	Zip:
Contact Person:	Phone:	Email:

Type of Business (Check all that apply) **Air District Facility ID[1]:**

- ☐ Onshore Crude Oil Production _____
- ☐ Offshore Crude Oil Production _____
- ☐ Onshore Natural Gas Production _____
- ☐ Offshore Natural Gas Production _____
- ☐ Natural Gas Storage Facility _____
- ☐ Natural Gas Processing _____
- ☐ Crude Oil Pipeline _____
- ☐ Crude Oil Storage _____
- ☐ Crude Oil Processing _____
- ☐ PERP Equipment Owner[2] _____
- ☐ Other (Specify): _____ _____

1. If your facility does not have an air district facility ID, please see instructions to create one. This code will be used in the remaining tables under "Air District Facility ID".
2. Portable Equipment Registration Program (PERP).

California Air Resources Board
Oil and Gas Industry Survey

Reporting Year 2007

Table 2: Facility Production

Facility Name:

Box 1: Production

Number of:	**Produced Natural Gas[1]**	**Natural Gas Storage**	**Ultra Heavy Oil API < 10°**	**Heavy Oil API 10° - 20°**	**Light Oil API 20° - 30°**	**Ultra Light Oil API > 30°**
Active Wells	_____	_____	_____	_____	_____	_____
Well Cellars	_____	_____	_____	_____	_____	_____
New Wells Drilled	_____	_____	_____	_____	_____	_____
Workovers (Tubing Removal)	_____	_____	_____	_____	_____	_____
Well Cleanups[3]	_____	_____	_____	_____	_____	_____
Well Completions	_____	_____	_____	_____	_____	_____
Volume Produced (bbl)		_____	_____	_____	_____	_____

Box 2: Associated or Produced Natural Gas Production[2]

	Mole % Methane	Mole % CO_2	Mole % H_2S	Higher Heating Value (Btu)	Volume Produced (SCF)
Average Raw Gas Stream	_____	_____	_____	_____	_____

Box 3: Crude Oil Transmission Pipeline (After LACT Unit)
Volume Transported

Barrels Crude Oil _____ Length (Miles) _____

1. Produced Natural Gas is gas extracted from a non-oil producing gas well. This category does not include associated gas.
2. Associated Gas is gas produced with crude oil extraction. Box 2 is to be used for both associated and produced natural gas.
3. Well cleanups are maintenance activities that include fracturing or removing fluids to increase production.

California Air Resources Board
Oil and Gas Industry Survey

Reporting Year 2007

Table 3: Facility Electrification

Air District Facility ID:		
Onsite Generated Electricity:		
Amount Generated: _____ MWh	Amount Exported: _____ MWh	Amount Purchased: _____ MWh

California Air Resources Board
Oil and Gas Industry Survey

Reporting Year 2007

Table 4: Vapor Recovery and Flares
(Complete one for each piece of equipment)

Air District Facility ID:	
Type: ☐ Flare ☐ Thermal Oxidizer ☐ Incinerator ☐ Carbon Adsorption	**Use:** ☐ Vapor Recovery ☐ Emergency
Flares, Thermal Oxidizers, and Incinerators Only Size (Btu/hr): _____ Throughput (SCF): _____ Combustion Efficiency: _____ **Avg. Composition** (Mole %)**:** _____ % Methane _____ % CO_2 **Carbon Mole Ratio**[1] _____	**Carbon Adsorbers Only:** Size (ft^3): _____ Throughput (SCF): _____ Capture Efficiency: _____ **Avg. Composition** (Mole %)**:** _____ % Methane

1. Please see instructions to calculate the carbon mole ratio.

California Air Resources Board
Oil and Gas Industry Survey

Reporting Year 2007

Table 5: Combustion Equipment
(Complete one for each piece of equipment)

Air District Facility ID:

External Combustion Type:

- ☐ Boiler
- ☐ Steam Generator
- ☐ Heater/Treater
- ☐ Oil Heater
- ☐ Reboiler
  - o Glycol
  - o Amine
- ☐ Other (Specify) _____

Internal Combustion Type:

Type:

- ☐ Reciprocating
  - o Rich Burn Two-Stroke
  - o Lean Burn Two-Stroke
  - o Rich Burn Four-Stroke
  - o Lean Burn Four-Stroke
- ☐ Combined Heat and Power
- ☐ Turbine
  - o Simple Cycle
  - o Combined Cycle
- ☐ Microturbine
- ☐ Drill Rig
- ☐ Workover Rig

Use:

- ☐ Compressor
  - o ID[1] _____
- ☐ Vapor Recovery
- ☐ Crude Oil Pump
- ☐ Well Pump
- ☐ Water Injection Pump
- ☐ Other (Specify) _____

Manufacturer[2]:

Model Year:

Average Load (HP/BTU/MW):

Avg. Thermal Efficiency:
(Steam Generators and Turbine Engines)

Inspection Frequency:

Instrument Test _____

Visual Inspection _____

Third Party _____

Under Air District Permit?
☐ Yes ☐ No

PERP[4] Registered?
☐ Yes ☐ No

Fuel Type:	**Primary**	**Secondary**
Diesel	☐	☐
Pipeline Quality Gas	☐	☐
Associated Gas	☐	☐
Produced Gas	☐	☐
Waste Gas	☐	☐
Landfill Gas	☐	☐
Liquefied Petroleum Gas	☐	☐
Propane	☐	☐
Gasoline	☐	☐
Other (Specify): _____	☐	☐
Annual Fuel Volume: (Gallons/SCF)		
Metered	_____	_____
Calculated	_____	_____
Avg. Higher Heating Value (Btu)	_____	_____
Carbon Weight %	_____	_____
Liquid Fuel Density (lb/gal)	_____	_____
Gaseous Fuel Molecular Weight[3]	_____	_____

1. Create a unique ID number for each compressor engine. The number will be used in conjunction with Table 12.
2. For external combustion, list the burner manufacturer.
3. See instructions for calculation. 4. Portable Equipment Registration Program (PERP)

California Air Resources Board
Oil and Gas Industry Survey

Reporting Year 2007

Table 6: Component Counts[1]

Air District Facility ID:

Type:	**Number of Components by Product Type:**		
(1-inch and above):	**Natural Gas**	**Light Crude (API >20°)**	**Heavy Crude (API <20°)**
☐ Manual Valves	_____	_____	_____
☐ Flanges	_____	_____	_____
☐ Connectors	_____	_____	_____
☐ Open-ended Lines	_____	_____	_____
☐ Threaded Components	_____	_____	_____
Other Components:			
☐ Pump Seals	_____	_____	_____
☐ Pressure Relief Valves	_____	_____	_____
☐ Bursting Discs	_____	_____	_____
☐ Diaphragms	_____	_____	_____
☐ Hatches	_____	_____	_____
☐ Meters	_____	_____	_____
☐ Polished Rod Stuffing Boxes	_____	_____	_____
☐ Sight Glasses	_____	_____	_____
☐ Loading Arms	_____	_____	_____
☐ Dump Lever Arm	_____	_____	_____

1. If actual counts are not available please estimate. See instructions for details.

California Air Resources Board
Oil and Gas Industry Survey

Reporting Year 2007

Table 7: Automated Control Devices[1]

Air District Facility ID:

	Number:	Number on Gas Recovery[2]
Controllers:		
Gas Actuated		
Continuous Bleed	_____	_____
Intermittent Bleed	_____	_____
Low Bleed	_____	_____
No Bleed[3]	_____	
Electronically Actuated	_____	_____
Air Actuated	_____	_____
Actuators:		
Gas Actuated		
Piston Valve Operator	_____	_____
Hydraulic Valve Operator	_____	_____
Turbine Valve Operator	_____	_____
Electronically Actuated	_____	_____
Air Actuated	_____	_____

1. If actual counts are unavailable, please estimate.
2. Includes units connected to a vapor recovery system or vented back into a system.
3. A “No Bleed” controller is not connected to a gas recovery system.

California Air Resources Board
Oil and Gas Industry Survey

Reporting Year 2007

Table 8: Inspection and Maintenance Program[1] (For Table 6 and 7)

Air District Facility ID:		
Does your facility follow an Inspection and Maintenance (I&M) Program?	☐ **Yes**	☐ **No**
District Rule # for I&M Program (If Applicable)**:**		
I&M Program Type:		
Stratum:	Leak Threshold (ppm):	
☐ 0 – 500 ppm	_____	
☐ 500 – 1,000 ppm	_____	
☐ 1,000 – 2,000 ppm	_____	
☐ 2,000 – 10,000 ppm	_____	
☐ 10,000 – 50,000 ppm	_____	
☐ > 50,000 ppm	_____	
Is this test data available electronically? ☐ Yes ☐ No (If yes, please submit electronically)		

1. An Inspection and Maintenance Program is where the operator of a facility inspects their facility for leaks of organic gases and repairs the leaks.

California Air Resources Board
Oil and Gas Industry Survey

Reporting Year 2007

Table 9: Natural Gas Dehydration
(Complete one for each piece of equipment)

Air District Facility ID:

Type:
☐ Glycol ☐ Desiccant ☐ Other (Specify) _____

Avg. Natural Gas Composition (Mole %):

Input:	**Output:**
_____ % Methane	_____ % Methane
_____ % H_2S	_____ % H_2S
_____ % CO_2	_____ % CO_2
_____ HHV[1] (Btu)	_____ HHV[1] (Btu)

Input Volume (SCF):

Output Volume (SCF):

Volume of Liquids Removed (tons/year)**:**

For Glycol Units Only:

Glycol Circulation Rate (Gallons/Hour): _____

Average Flash Tank Pressure (PSIA): _____

Average Contactor Pressure (PSIA): _____

Gas Assisted Pump? ☐ Yes ☐ No

Electric Pump? ☐ Yes ☐ No

Stripping Gas Used? ☐ Yes ☐ No

Flash Separator? ☐ Yes ☐ No

For Desiccant Units Only:

Volume of Dehydrator (ft^3): _____

% of Packed Vessel Volume that is Natural Gas[2]: _____

Vessel Pressure (PSIG): _____

Frequency of Desiccant Replacement (days): _____

Vapor Recovery System:

☐ Flare
☐ Incinerator
☐ Collection System
☐ None
☐ Other (Specify) _____

Control Efficiency: _____%

1. HHV is Higher Heating Value.
2. See instructions.

California Air Resources Board
Oil and Gas Industry Survey

Reporting Year 2007

Table 10: Natural Gas Sweetening or Acid Gas Removal (Complete one for each piece of equipment)

Air District Facility ID:

Type:

- ☐ Amine
- ☐ Lo-Cat
- ☐ Claus Process
- ☐ Morphysorb
- ☐ Sulfa Treat
- ☐ Iron Sponge
- ☐ Mol Sieve
- ☐ Molecular Gate
- ☐ Grace Membranes
- ☐ Kvaerner Membrane
- ☐ Other (Specify) _____

Avg. Natural Gas Composition (Mole %):

Input:	**Output:**
_____ % Methane	_____ % Methane
_____ % H_2S	_____ % H_2S
_____ % CO_2	_____ % CO_2
_____ HHV[1] (Btu)	_____ HHV[1] (Btu)

Input Volume (SCF):

Output Volume (SCF):

Volume of Liquids Removed (tons/year)**:**

CO_2 Removal:

Total CO_2 Removed (tons/year): _____ Amount Incinerated (tons/year): _____

Amount Vented (tons/year): _____ Amount Captured (tons/year): _____

For Units that Require Solid Material Replacement

Volume of Unit (ft^3): _____ % of Packed Vessel Volume that is Natural Gas[2]: _____

Vessel Pressure (PSIG): _____ Frequency of Material Replacement (days): _____

Vapor Recovery System:

- ☐ Flare
- ☐ Incinerator
- ☐ Collection System
- ☐ None
- ☐ Other (Specify) _____

Control Efficiency: _____%

1. HHV is Higher Heating Value.
2. See instructions.

California Air Resources Board
Oil and Gas Industry Survey

Reporting Year 2007

Table 11: Other Natural Gas Processing
(Complete one for each piece of equipment)

Air District Facility ID:	
Unit Type: ☐ Fractionation ☐ Mercury Removal ☐ Nitrogen Removal ☐ Other (Specify) _____	
Avg. Natural Gas Composition (Mole %): **Input:** **Output:** _____ % Methane _____ % Methane _____ % H_2S _____ % H_2S _____ % CO_2 _____ % CO_2 _____ HHV[1] (Btu) _____ HHV[1] (Btu)	**Input Volume** (SCF): **Output Volume** (SCF): **Volume of Liquids Removed** (tons/year)**:**
Vapor Recovery System: ☐ Flare ☐ Other (Specify) _____ Control Efficiency: _____% ☐ Incinerator ☐ None ☐ Collection System	

1. HHV is Higher Heating Value.

California Air Resources Board
Oil and Gas Industry Survey

Reporting Year 2007

Table 12: Natural Gas Compressors
(Complete one for each piece of equipment)

Air District Facility ID:		
Type: ☐ Centrifugal o # Wet Seals _____ o # Dry Seals _____ ☐ Reciprocating o # Cylinders _____ ☐ Rotary ☐ Other (Specify) _____	**Primary Driver:** Compressor ID[1] _____ Type: ☐ Electric ☐ Turbine ☐ Piston Engine ☐ Integral	**Starter Type** (For Primary Driver)**:** ☐ Gas Expansion o Natural Gas o Instrument Air ☐ Electric ☐ Hydraulic ☐ Other (Specify) _____
Manufacturer:	**Model Year:**	**Annual Usage** (Hours)**:**
Inspection Frequency (Daily, Monthly, Annually, ect.)**:**	**Maintenance Frequency**[2]**:**	
Discharge Pressure (PSIA)	**Discharge Temperature** (°F)	**Idle Pressure** (PSIA)
Blow-downs: Total Number: _____ Total Volume of Gas for Blow-downs (SCF): ☐ Vented _____ ☐ Flared _____ ☐ Recovered _____	**Start-ups:** Total Number: _____ Total Volume of Gas for Start-ups (SCF): ☐ Vented _____ ☐ Flared _____ ☐ Recovered _____	

1. Enter the compressor engine ID number from Table 5. If the compressor engine is electric, leave this field blank.
2. The maintenance frequency is the number of times the unit had to be disassembled to replace valves, seals, or packing.

California Air Resources Board
Oil and Gas Industry Survey

Reporting Year 2007

Table 13: Pipelines

Air District Facility ID:

Natural Gas:
Extraction Facility Gathering System (Prior to Gas Meter) Estimated Length (miles): _____

Natural Gas Gathering System Maintenance Activites (SCF)**:**

	Pipeline Gas	Associated Gas[1]	Produced Gas[2]
Vented	_____	_____	_____
Flared	_____	_____	_____
Recovered[3]	_____	_____	_____

Pigging Operations:

Number of Launchers/Receivers Crude Oil _____ Natural Gas _____

Number of Launcher/Receiver Openings Crude Oil _____ Natural Gas _____

Are Launchers/Receivers Purged with Inert Gas Prior to Opening? ☐ Yes ☐ No

1. Associated Natural Gas is gas produced with crude oil extraction.
2. Produced Natural Gas is gas extracted from a gas well.
3. Recovered is any volume of gas that is not either vented or flared.

California Air Resources Board
Oil and Gas Industry Survey

Reporting Year 2007

Table 14: Crude Oil or Natural Gas Separation Units
(Complete one per piece of equipment)

Air District Facility ID:		
Type: ☐ Free Water Knockout ☐ Heater/Treater ☐ Horizontal Separator ☐ Vertical Separator ☐ Flow Splitter ☐ Wemco ☐ Emulsion Treater ☐ Condensate Tank ☐ Other (Specify) _____	**Subtype:** ☐ Bolted ☐ Welded	**Size** (Barrels/SCF)**:** **Number of Degassing Events:** **Throughput** (Barrels/year or SCF/year)**:** **Avg. Crude Oil API:**
	ROG (tons/year) **TOG** (tons/year) Working Loss _____ _____ Breathing Loss _____ _____ Flashing Loss _____ _____ Avg. Methane _____ % Avg. CO_2 _____ %	**Components:** ☐ Access Hatch ☐ Pressure Relief Valve Are hatches and pressure relief valves included in Table 6? ☐ Yes ☐ No
Vapor Recovery System: ☐ Flare ☐ Incinerator ☐ Collection System	☐ None ☐ Other (Specify) _____	Control Efficiency: _____%

California Air Resources Board
Oil and Gas Industry Survey

Reporting Year 2007

Table 15: Crude Oil Separation Sumps or Pits
(Complete one per piece of equipment)

Air District Facility ID:	
Level: ☐ Primary ☐ Secondary ☐ Tertiary	**Usage:** ☐ Crude Oil API _____ ☐ Number of Days in Use _____
Dimensions: Area (Square Feet) _____ Depth (Feet) _____	**Vapor Recovery System:** ☐ Flare ☐ Cover ☐ Incinerator ☐ None ☐ Collection System ☐ Other (Specify) _____ Control Efficiency _____%

California Air Resources Board
Oil and Gas Industry Survey

Reporting Year 2007

Table 16: Crude Oil Storage Tanks
(Complete one per piece of equipment)

Air District Facility ID:

Type:	**Subtype:**	**Size** (Barrels)**:**
☐ Fixed Roof ☐ Internal Floating Roof ☐ External Floating Roof ☐ Open Top Roof	☐ Bolted Tank ☐ Welded Tank	**Number of Degassing Events:** **Avg. Crude Oil API:**

	ROG (tons/year)	**TOG** (tons/year)
Working Loss	_____	_____
Breathing Loss	_____	_____
Flashing Loss	_____	_____

Avg. Methane _____ % Avg. CO_2 _____ %

Components:

☐ Access Hatch
☐ Pressure Relief Valve

Are hatches and pressure relief valves included in Table 6? ☐ Yes ☐ No

Floating Roof Tanks Only:

Deck Leg Height (ft): _____ Tank Diameter (ft): _____

Primary Seal:

- ☐ Metallic Shoe
  - o Liquid Mounted
  - o Vapor Mounted
- ☐ Resilient Toroid
  - o Liquid Mounted
  - o Vapor Mounted
- ☐ Wiper
- ☐ Other (Specify) _____

Secondary Seal:

- ☐ Wiper
- ☐ Resilient Toroid
  - o Liquid Mounted
  - o Vapor Mounted
- ☐ Other (Specify) _____

Vapor Recovery System:

☐ Flare
☐ Incinerator
☐ Collection System
☐ None
☐ Other (Specify) _____

Control Efficiency: _____%

California Environmental Protection Agency
Air Resources Board

Oil & Natural Gas Industry Survey

General Instructions

Mailing Address:

California Air Resources Board
P.O. Box 2815
Sacramento, California 95812
Attention: SSD / Oil & Gas Survey

February 2009

Overview

The Oil & Natural Gas Industry Survey has been designed to improve our estimates of greenhouse gas emissions in California. We are collecting data for the 2007 calendar year in order to accurately quantify equipment and operation processes. This survey is intended to be a one-time collection of information needed to develop a statewide inventory baseline. This survey is not being used as a compliance tool nor is it part of other mandatory reporting programs. This survey pertains to all upstream oil and natural gas facilities regardless of the size of the operation.

The following instructions have been provided to answer general questions pertaining to the individual survey tables. Since this survey covers a wide range of processes and operations, some companies may not need to complete every table.

Who should fill out this survey? Any owner or operator of the following facilities:

> Oil or Natural Gas Extraction Facilities: includes any facility that extracts crude oil, natural gas, or both crude oil and natural gas.
>
> Processing Facilities: includes any facility that processes crude oil or natural gas for use or distribution. This survey does not include refineries.
>
> Crude Oil Transmission Facilities: includes crude oil pipelines or crude oil bulk loading operations. This includes ship, truck, or rail car loading facilities.
>
> Storage Facilities: includes any facility that stores crude oil or natural gas, including underground natural gas storage facilities. This survey excludes crude oil tank farms that are located on refinery premises.

Submission Format. Paper forms, Microsoft Excel/Access files, or a combination of both paper and electronic files are acceptable. It is preferable to have all data submitted electronically. We have staff available to provide assistance or answer questions via e-mail or telephone.

Permitted and Non-Permitted Equipment. This survey covers both air district permitted and non-permitted equipment and includes equipment that is registered under the Portable Equipment Registration Program (PERP). Therefore, this survey includes equipment that is moved more than once annually and includes non-air district permitted equipment that is below 50-horsepower in rating.

Questions? Please contact any of the following ARB staff for questions or assistance:

Stephanie Lee	(916) 324-8024	sjlee@arb.ca.gov
Joseph Fischer	(916) 445-0071	joseph.fischer@arb.ca.gov
Luis Leyva	(916) 323-1079	lleyva@arb.ca.gov

General Instructions

Table 1: Facility Description

This survey and the Facility Description Table are to be completed one time per geographically distinct facility (i.e., property boundary) by the entity that has operational control of the equipment. Even though a single operator may oversee operations at multiple facilities, please complete one survey per geographically distinct facility in order for us to determine the locations of equipment and processes.

PERP Equipment Owners: In the case where a company owns and operates equipment that is portable (e.g., PERP registered equipment such as drill rigs, portable gas compressors) please use the company headquarters contact information as the facility description.

Inside a facility there may be different Facility ID numbers provided by the local air district (e.g., multiple gas plants). Please provide the facility ID number where indicated. In some cases, a Facility ID number may not be available and a generic number must be created. One way to create a unique ID number is by using the first two letters of the local air district where the facility is located and a number. For example, a facility located in San Joaquin Valley APCD could use "*SJ1, SJ2, etc.*"

Table 2: Facility Production

The Facility Production Table is designed to list active wells, production, and workover information for the 2007 calendar year. Enter information in the corresponding categories. Indicate the number of new wells drilled, completions, and workovers for the facility. For well workovers, enter the number that required tubing removal only. The number that did not require tubing removal is not required. Well cleanups (also referred to as well unloading) include fluids removal or well fracturing, where in either case fluids are removed from the well.

There is a separate column listed for underground natural gas storage facilities. Some of these facilities may intermittently produce crude oil with the natural gas. For simplification, please enter the volume of oil intermittently produced from the gas wells in Box 1 under the Natural Gas Storage Column, and enter the total volume of natural gas extracted in Box 2. For all companies, please enter the average natural gas composition and volume in Box 2.

For crude oil transmission facilities, a section has been included for length of pipeline and barrels of crude oil transported. These facilities are located after a production facility's LACT unit. A production facility does not enter information in Box 3.

Table 3: Facility Electrification

The Facility Electrification Table is designed to determine the level of electrification at crude oil and natural gas facilities. This information is important to understand the level of electrification within the sector. In some instances, a facility may generate or export its own electricity using Generators, Microturbines, Turbines, or Combined Heat and Power units. This includes electricity generated from standby or backup, on-site generators used in the event of power outages. Please indicate the amount of electricity generated, exported, and purchased. Estimated values are acceptable.

Table 4: Vapor Recovery and Flaring

Vapor recovery units consist of flares, thermal oxidizers, incinerators, and carbon adsorption units. These units control the release of hydrocarbons and may be designed for continuous or emergency operation. Table 4 is to be completed one time for each piece of equipment. In most cases, it may be easier to use one of the electronic templates.

Enter the throughput volume and rated size of the unit. For flares, enter the size in terms of btu/hour. For carbon adsorption units, enter the size in terms of the volume of the unit (height x diameter, etc.). In some cases the units are source tested for combustion or capture efficiency. If test data are available, please enter the efficiency where indicated.

For flares, thermal oxidizers, or incinerators, the average composition of the raw natural gas stream is required to enter the average gas composition and calculate the Carbon Mole Ratio. In many cases, a Gas Chromatograph (GC) analysis will have all of the values but the Carbon Mole Ratio must be calculated. If you are unsure on how to calculate these parameters, please call or submit a copy of a GC analysis and we will provide assistance. For convenience, the formula and a simplified example are shown below.

$$Carbon\ Mole\ Ratio = \sum \left[\frac{mole\ \%\ hydrocarbon}{100}\right] * Number\ carbons\ in\ hydrocarbon$$

The carbon mole ratio is calculated by adding up each of the mole percentages multiplied by the number of carbons in each species. The following is a simplified example:

Species	Mole %
Methane (CH_4)	80
Ethane (C_2H_2)	15
Propane (C_3H_8)	5

In this example, the carbon mole ratio would be calculated as follows:

Carbon Mole Ratio = (80/100)(1) + (15/100)*(2) + (5/100)*(3) = <u>1.25</u>*

Table 5: Combustion Equipment

Table 5 is to be completed one time for each piece of combustion equipment. In most cases, it may be easier to use one of the electronic templates. This table is designed to accommodate a wide variety of external and internal combustion equipment. List both air district and nonair district permitted equipment. The table also includes a box to indicate if the equipment is included in the Portable Equipment Registration Program (PERP).

The purpose of this survey is to perform an accurate statewide inventory baseline. Therefore, this survey includes equipment that is moved more than once annually and includes non-air district permitted equipment that is below 50-horsepower in rating.

We have provided examples from which to choose and the option to specify equipment not included as an example. For engines powering compressors, enter a unique ID number that will be used with the natural gas compressor table (Table 12). This number will link the primary driver engine with the natural gas compressor.

Enter the manufacturer name where indicated. For some external combustion units (e.g., steam generators) it is acceptable to enter the name of the burner manufacturer if no other information is available. Enter the inspection frequency and indicate the frequency that involves testing with instruments, visual inspections, and the use of a third-party tester. Estimated inspection frequencies are acceptable.

Fuel Type and Fuel Properties

Under fuel type, list the primary and, if necessary, the secondary fuel type and volume as metered or calculated. The average Higher Heating Value and Liquid Fuel Density may be entered as standard values. If available, it is preferred to have actual values. A Gas Chromatograph (GC) analysis will provide the values for you.

In many cases, a GC analysis will list values or allow figures to be computed. If you are unsure on how to calculate these parameters, please call or submit a copy of a GC analysis and we will provide assistance. For convenience, the formula for Gaseous Fuel Molecular Weight is provided below.

$$Gaseous\ Fuel\ MW = \frac{1}{100} * \sum \left[\left(Mole\ \%_{compound} \right) * \left(MW_{compound} \right) \right]$$

Where:

$$Mole\ \%_{compound} = indicated\ on\ GC\ analysis$$

$$MW_{compound} = \sum Weight_{element} * Coefficient_{element}$$

An example calculation for $MW_{compound}$: CH_4 = (12*1) + (1*4) = *16*

Table 6: Component Counts

Table 6 provides a means of organizing components by natural gas, heavy crude, and light crude oil. If the actual number of components is unknown for a facility, it is acceptable to estimate the number using an average number of components per unit and then multiply by the total number of similar units. Table 6 has been designed similarly to local air district inspection and maintenance (I&M) programs and should be completed in conjunction with Table 8.

Table 7: Automated Control Devices

Automated Control Devices (i.e., pneumatic devices) control the flow of fluids or gases. The devices may be connected to a central vapor recovery system or plumbed back into a natural gas system (gas recovery). Table 7 has been designed similarly to local air district inspection and maintenance (I&M) programs and should be completed in conjunction with Table 8.

Typically, a single unit consists of one or more components. For example, a controller is used to control an actuator and the actuator is used to operate a block or turbine valve. Intermittent bleed devices are the actuators that only emit when actuated. Low bleed devices are the controllers that continuously emit less than 6 scfh. Figure 1 shows the common components. For additional information, please refer to the manufacturer catalogue or look at the EPA Natural Gas Star web site for topics on pneumatic devices, such as http://www.epa.gov/gasstar/documents/ll_pneumatics.pdf

Due to design characteristics of the various units, indicate how many controllers and actuators are located at the facility and whether the devices are instrument air, gas, or electronically actuated. If the actual number of components is unknown for a facility, an estimated number of components are acceptable.

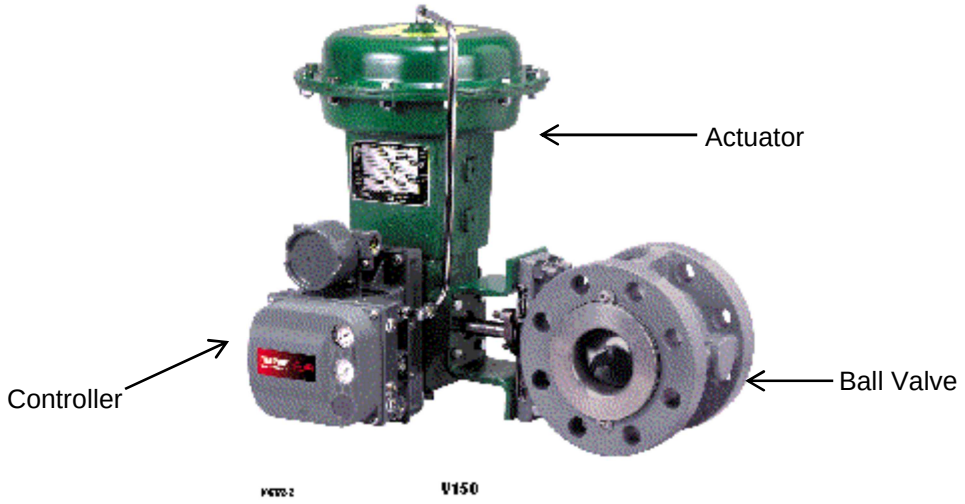

Figure 1. Typical Vee-Ball® Valves with Type 1052 Actuators and DVC6020 Digital Valve Controllers.

Table 8: Inspection and Maintenance Program

An inspection and maintenance (I&M) program requires a facility operator to routinely screen for and repair leaks from equipment at their facility. Many facilities are required to comply with local air district I&M programs. Table 8 is designed to list how companies comply with the various requirements. Check the box or boxes that indicate the stratum range that the facility tests to. Indicate a different leak threshold should the facility test to a different level within the indicated stratum range.

In many cases oil and gas facilities store I&M data electronically. This data may be provided by a third-party tester, etc. If you have I&M data available in electronic format, submittal of the information would help prevent overestimating emissions or relying on national averages. Please submit electronic I&M program data in any Microsoft Excel or Access format. Submittal of hard copy data is not required.

Table 9: Natural Gas Dehydration

Natural Gas Dehydration units are used to remove moisture from a natural gas stream. The most common types are glycol and desiccant units. Please complete one table for each unit. In some cases, it may be simpler to use one of the electronic templates.

Enter the average input and output gas composition and enter the estimated volume of liquids removed for the 2007 calendar year. Indicate if the unit is connected to a vapor recovery system and if available, enter the control efficiency of the vapor recovery system.

For glycol units, there are fields provided for average circulation rate, pump type, and stripping gas. Check each box and fill in the appropriate fields that apply. Similarly, a separate box is included for desiccant units. For desiccant units, indicate the volume of the unit (height x diameter, etc.) and indicate the average remaining volume that exists after the unit is packed with desiccant (a typical value is 45 percent). If you can estimate a more precise percent packed volume value, please provide where indicated.

Table 10: Natural Gas Sweetening or Acid Gas Removal

Natural gas sweetening and acid gas removal units are used to condition gas for combustion or resale. Table 10 is designed to accommodate a large variety of units. In some cases all fields may not need to be completed. Please complete one table for each particular unit. It may be convenient to use one of the electronic templates.

Enter the average input and output gas composition. Enter the Higher Heating Value of the input and output gas streams (average values are acceptable).

In some units CO_2 is mixed with waste gas and sent to an incinerator or vented. Indicate the method of CO_2 disposal. For units that require regular solid material replacement, indicate the average remaining volume that exists after the unit is packed with material

(a typical value is 45 percent). If you can estimate a more precise percent packed volume value, please enter the value where indicated.

Table 11: Other Natural Gas Processing

Table 11 is for listing other processing units used for removing natural gas liquids other than CO_2, H_2S, and water. Please complete one table for each particular unit. It may be convenient to use one of the electronic templates.

Enter the average input and output gas composition and average volume of liquids removed. Indicate if the unit is connected to a vapor recovery system and list the estimated control efficiency of the vapor recovery system where indicated. In some cases it may be necessary to estimate total throughput.

Table 12: Natural Gas Compressors

Table 12 is designed to cover a variety of natural gas compressors. Please complete one table for each individual unit. This table should be completed using the unique compressor ID number from Table 5. This will link the compressor with the primary driver engine.

The primary types of compressors are reciprocating, centrifugal, rotary, and integral. In an integral unit, the primary driver engine and compressor are combined into a single unit. In other cases, the primary driver engine (internal combustion or turbine engine) are separated by a drive shaft.

For centrifugal units, indicate the type and number of wet or dry seals under the corresponding seal type. Wet seals, also known as lubricated seals, use oil as a means to retain internal compressor pressure. Wet seal units may be identified as having a separate “seal oil” pump used to maintain seal pressure. Dry seal compressors may be identified as having a separate “seal gas” outlet for gas to escape the compressor. Both wet and dry seal compressors will have a lube oil pump.

Indicate the primary driver and starter type. Enter the average discharge and idle pressure in units of pounds per square inch and the discharge temperature in degrees F. The discharge pressure is the average pressure inside the unit during operation. The idle pressure is the average pressure when the unit is idle.

Indicate the hours of usage, number of start-ups and blowdowns, and the inspection frequency. The maintenance frequency is the number of times the unit had to be disassembled to replace valves, seals, or packing. If actual numbers are not available, estimated values are acceptable.

Table 13: Pipelines

Table 13 pertains to natural gas gathering systems found within an extraction or underground natural gas storage facility (prior to a gas meter). Enter, or estimate, the length of the natural gas pipeline gathering system where indicated. Enter estimated volumes depicting how gas is handled for system maintenance or modification activities.

Table 13 also pertains to crude oil transmission and natural gas pipeline pigging operations conducted at the facility. Enter, or estimate how many times a pig was sent or received for the 2007 calendar year. Please indicate whether the operations were for crude oil or natural gas pipeline.

Table 14: Crude Oil or Natural Gas Separation Units

Table 14 is designed to accommodate a variety of crude oil and natural gas separation units. There are a variety of units in this category. We have included a list of some examples and an option to specify units at the facility that may go by a different name. Please complete one table per individual unit. In some cases, it may be more convenient to use one of the electronic templates provided.

Enter the Working, Breathing, and Flashing Losses as calculated with *TANKS* (US Environmental Protection Agency) or similar software or calculation, or enter the values as listed on the district permit. If the calculations have not been performed and are not required by the local air district, please leave these fields blank.

In order to prevent double counting of components, indicate if the separation unit components were included in Table 6 and indicate if the unit is controlled by a vapor recovery system.

Table 15: Crude Oil Separation Units Sumps or Pits

Crude oil separation sumps or pits are used to separate water from crude oil and may be used for permanent or emergency purposes. Indicate whether the sump is primary, secondary, or tertiary and list the average crude oil API number and number of days the sump or pit was in use. In some cases, a sump may be used in conjunction with a cover or a vapor collection system. Please indicate if either type of system is used.

Table 16: Crude Oil Storage Tanks

Table 16 is designed to accommodate fixed roof and floating roof crude oil storage tanks. Please complete one table per storage tank. In some cases, it may be convenient to use one of the electronic templates.

Enter the tank type, size, and average crude oil API number. Enter the number of degassing events that required the tank to be completely emptied of liquid and vapor.

For fixed roof and floating roof tanks, enter the Working, Breathing, and Flashing Losses as reported to the local air district. If available, enter the average methane and carbon dioxide values as depicted in a Gas Chromatograph analysis. If information is not available for methane or carbon dioxide concentration, please leave those fields blank.

Appendix B: Emission Calculation Methodologies and Corresponding Emission Factors

California Air Resources Board
Oil and Gas Industry Survey

Emission Calculation Methodologies
and
Corresponding Emission Factors

Appendix B details the individual equations and emission factors used to calculate greenhouse gas emissions. Default mole percent of CH_4 and CO_2 are 78.8 percent and 3 percent, respectively (API, 2004). For equipment that has vapor recovery, CO_2 and CH_4 emissions are reduced by the vapor recovery efficiency before conversion to CO_2e. All CO_2, CH_4, and N_2O values are multiplied by their corresponding GWP (1 for CO_2, 21 for CH_4, and 310 for N_2O) to get the CO_2e number.

Method 1 – Active Wells

The 2007 Industry survey separates crude oil into four categories: ultra-heavy, heavy, light, and ultra-light. It also separates gas wells by dry gas fields and gas storage fields. When calculating GHG emissions from active wells, the categories ultra-heavy and heavy crude use the emission factor "heavy crude", light and ultra-light crude use the emission factor "light crude", and dry gas and gas storage use the emission factor "natural gas".

CO_2 emissions (tonnes/year) = (CO_2 EF)*(Number)*(CO_2 Mole Fraction\0.03)

Where

CO_2 EF = See Table 1
Number = Number of active wells
CO_2 Mole Fraction = (lbmole CO_2)/(lbmole gas)

Data Requirements

1. Number of active wells
2. Mole % CO_2

CH_4 emissions (tonnes/year) = (CH_4 EF)*(Number)*(CH_4 Mole Fraction\0.788)

Where

CH_4 EF = See Table 1
Number = Number of active wells
CH_4 Mole Fraction = (lbmole CH_4)/(lbmole gas)

Data Requirements

1. Number of active wells
2. Mole % CH_4

Table 1: Wellheads

Type	CH_4 (tonnes/well-year)	% Methane Assumption	CO_2 (tonnes/well-year)	% CO_2 Assumption
Natural Gas	0.157[1]	78.8	1.644E-02[1]	3
Light Crude	0.108[1]	78.8	1.128E-02[1]	3
Heavy Crude	4.568E-03[1]	78.8	4.782E-04	3

1. API (2004)

Method 2 – Well Cellars

The 2007 Industry survey separates crude oil into four categories: ultra-heavy, heavy, light, and ultra-light. When calculating GHG emissions from well cellars, an average dimension of 6 feet by 6 feet is used (Kern County APCD,1990). Additionally, the categories ultra-heavy and heavy crude use the emission factor “heavy crude”, light and ultra-light crude use the emission factor “light crude”.

CH_4 emissions (tonnes/year) = (CH_4 EF)*(Number)

Where
CH_4 EF = See Table 2
Number = number of well cellars

Data Requirements
1. Number of well cellars

Table 2: Well Cellars

Type	CH_4 (tonnes/well cellar-year)
Light Crude	0.170[1]
Heavy Crude	0.125[1]

1. Kern County APCD (1990)

Method 3 – New Wells Drilled

CH_4 emissions (tonnes/year) = (CH_4 EF)*(Number)

Where
CH_4 EF = See Table 3
Number = Number of wells drilled

Data Requirements
1. Number of wells drilled

Table 3: New Wells Drilled

Type	CH_4 (tonnes/well-year)
Natural Gas	
Light Crude	
Heavy Crude	

Method 4 – Well Workovers and Cleanups

The calculations for well workovers and cleanups assume an average well depth, casing diameter, and tubing diameter and that only one well volume is released. For crude oil wells, the volume of gas released is assumed to be the space between the casing and tubing. For natural gas wells, the volume of gas released is assumed to be the entire volume of the casing.

CO_2 emissions (tonnes/year) = (EF)*(CO_2 Mole Fraction)*(D)* (Events)

Where

EF = See Table 4
CO_2 Mole Fraction = (lbmole CO_2)/(lbmole gas)
D = (molar volume)*(Molecular Weight CO_2)*(tonne/2204.6lb)
Molar Volume = (1 lbmole gas)/(379.3 scf gas)
Molecular Weight CO_2 = (44 lb CO_2)/(lbmole CO_2)
Events = Number of well workovers and cleanups

Data Requirement

1. Number of well workovers and cleanups
2. Mole % CO_2

CH_4 emissions (tonnes/year) = (EF)*(CH_4 Mole Fraction)*(D)* (Events)

Where

EF = See Table 4
CH_4 Mole Fraction = (lbmole CH_4)/(lbmole gas)
D = (molar volume)*(Molecular Weight CH_4)*(tonne/2204.6lb)
Molar Volume = (1 lbmole gas)/(379.3 scf gas)
Molecular Weight CH_4 = (16 lb CH_4)/(lbmole CH_4)
Events = Number of well workovers and cleanups

Data Requirement

1. Number of well workovers and cleanups
2. Mole % CH_4

Emission Factor Calculation (Listed in Table 4)

Equation = $[(V)*(P_1)*(T_2)]/[(P_2)*(T_1)]$

Where

V = volume of well
P_1 = shut-in pressure (psia) of well
P_2 = 14.7 psia (standard surface pressure)
T_1 = temperature in well at shut-in pressure
T_2 = 60°F (standard surface temperature)

Assumptions

Depth = 5000 ft
Casing Diameter = 7 in
Tubing Diameter = 2.875 in
P_1 = 100 psia
T_1 = 60°F

Table 4: Well Workovers and Cleanups

Type	CH_4/CO_2 (scf/event)
Natural Gas	9090.256
Light Crude	7556.855
Heavy Crude	7556.855

Method 5 – Well Completions

CH_4 emissions (tonnes/year) = (CH_4 EF)*(Number)

Where
CH_4 EF = See Table 5
Number = Number of wells completed

Data Requirements
1. Number of wells completed

Table 5: Well Completions

Type	CH_4 (tonnes/well)
Natural Gas	
Light Crude	
Heavy Crude	

Method 6 – Flares, Incinerators, Thermal Oxidizers

CO_2 and CH_4 emission calculations based on the following mass balance equations (API, 2004).

CO_2 emissions (tonnes/year) = (Combustion Emissions) + (Vented Emissions)

Combustion emissions (tonnes/year) = (Throughput)*(Carbon Mole Ratio)*(Combustion Efficiency)*(D)

Where
Throughput = volume of gas flared (scf gas/year)
Carbon Mole Ratio = ∑[(mole % hydrocarbon/100)*(# carbons in hydrocarbon)]
D = (molar volume)*(Molecular Weight CO_2)*(tonne/2204.6lb)
Molar Volume = (1 lbmole gas)/(379.3 scf gas)
Molecular Weight CO_2 = (44 lb CO_2)/(lb mole CO_2)

Data Requirements
1. Throughput (scf gas/year)
2. Combustion Efficiency (98% will be assumed if no combustion efficiency is supplied)
3. Carbon Mole Ratio of gas

Vented emissions (tonnes/year) = (Throughput)*(CO_2 Mole Fraction)*(D)

Where
Throughput = volume of gas flared (scf/year)
CO_2 Mole Fraction = (lbmole CO_2)/(lbmole gas)
D = (molar volume)*(Molecular Weight CO_2)*(tonne/2204.6lb)
Molar Volume = (1 lbmole gas)/(379.3 scf gas)
Molecular Weight CO_2 = (44 lb CO_2)/(lb mole CO_2)

Data Requirements
1. Throughput (scf/year)
2. Mole % CO_2

CH_4 emissions (tonnes/year) = (Throughput)*(CH_4 Mole Fraction)*(% Residual CH_4)*(D)

Where

Throughput = volume of gas flared (scf gas/year)
CH_4 Mole Fraction = (lbmole CH_4)/(lbmole gas)
% Residual CH_4 = 100 – (Combustion Efficiency)
D = (molar volume)*(Molecular Weight CH_4)*(tonne/2204.6lb)
Molar Volume = (1 lbmole gas)/(379.3 scf gas)
Molecular Weight CH_4 = (16 lb CH_4)/(lb mole CH_4)

Data Requirements

1. Throughput (scf gas/year)
2. Combustion Efficiency (98% will be assumed if no combustion efficiency is supplied)
3. Mole % CH_4

N_2O emissions (tonnes/year) = (Throughput)*(N_2O Emission Factor)

Where

Throughput = volume of gas flared (scf gas/year)
N_2O Emission Factor = 1E-10 tonnes/scf gas (INGAA, 2005)

Data Requirements

1. Throughput (scf/year)

Method 7 – Carbon Adsorbers

The vented emission calculation for carbon adsorbers assumes that 100% of the methane in the gas stream passes through the adsorber.

CH_4 emissions (tonnes/year) = (Throughput)*(CH_4 Mole Fraction)*(D)

Where

Throughput = volume of gas (scf gas/year)
CH_4 Mole Fraction = (lbmole CH_4)/(lbmole gas)
D = (molar volume)*(Molecular Weight CH_4)*(tonne/2204.6lb)
Molar Volume = (1 lbmole gas)/(379.3 scf gas)
Molecular Weight CH_4 = (16 lb CH_4)/(lbmole CH_4)

Data Requirements

1. Throughput (scf gas/year)
2. Mole % CH_4

Method 8 – Mass Balance Fuel Consumption

CO_2 and CH_4 combustion calculations for all combustion equipment (except flares, incinerators, and thermal oxidizers) are based on the following mass balance equations (INGAA, 2005).

Gaseous Fuels

CO_2 emissions (tonnes/year) = (Combustion Emissions) + (Vented Emissions)

Combustion Emissions (tonnes/year) = (Fuel Use)*(MW_{fuel})*(Carbon Weight %)*(COX)*(D)

Where

Fuel Use = fuel use (scf/year)
MW_{fuel} = molecular weight of fuel (lb fuel/lbmole fuel)
Carbon Weight % = (lb C/lb fuel)
COX = fraction of fuel oxidized (assumed to be 99%)
D = (molar volume)*(1/MW_C)*(lbmole CO_2/lbmole C)*(MW_{CO2})*(tonne/2204.6 lb)
Molar Volume = (1 lbmole gas)/(379.3 scf gas)
MW_C = (12 lb C)/(lb mole C)
MW_{CO2} = (44 lb CO_2)/(lb mole CO_2)

Data Requirements

1. Fuel Use (scf gas/year)
2. Molecular Weight of fuel
3. Carbon Weight % of fuel
4. COX (if different from assumed value of 99%)

Vented Emissions (tonnes/year) = (Fuel Use)*(1-COX)*(CO_2 Mole Fraction)*(D)

Where

Fuel Use = fuel use (scf/year)
COX = fraction of fuel oxidized (assumed to be 99%)
D = (molar volume)*(MW_{CO2})*(tonne/2204.6 lb)
Molar Volume = (1 lbmole gas)/(379.3 scf gas)
MW_{CO2} = (44 lb CO_2)/(lb mole CO_2)

Data Requirements

1. Fuel Use (scf gas/year)
2. COX (if different from assumed value of 99%)
3. Mole % CO_2

CH_4 emissions (tonnes/year) = (Fuel Use)*(CH_4 Mole Fraction)*(1-COX)*(D)

Where

Fuel Use = fuel use (scf/year)
COX = fraction of fuel oxidized (assumed to be 99%)
D = (molar volume)*(MW_{CH4})*(tonne/2204.6 lb)
Molar Volume = (1 lbmole gas)/(379.3 scf gas)
MW_{CH4} = (16 lb CH_4)/(lb mole CH_4)

Data Requirements

1. Fuel Use (scf gas/year)
2. COX (if different from assumed value of 99%)
3. Mole % CH_4

Liquid Fuels

CO_2 emissions (tonnes/year) = (Fuel Use)*(Fuel Density)*(Carbon Weight %)*(COX)*(D)

Where

Fuel Use = fuel use (gal/year)
Fuel Density = density of fuel (lb fuel/gal fuel)
Carbon Weight % = (lb C/lb fuel)
COX = fraction of fuel oxidized (assumed to be 99%)
D = $(1/MW_C)$*(lbmole CO_2/lbmole C)*(MW_{CO2})*(tonne/2204.6 lb)
MW_C = (12 lb C)/(lb mole C)
MW_{CO2} = (44 lb CO_2)/(lb mole CO_2)

Data Requirements

1. Fuel Use (gal fuel/year)
2. Fuel Density
3. Carbon Weight % of fuel
4. COX (if different from assumed value of 99%)

Method 9 - Equipment Specific

Combustion calculations for equipment with equipment specific emission factors. This method is used only for those equipment that have emission factors listed in Table 6.

CO_2 emissions (tonnes/year) = (Fuel Use)*(HHV)*(CO_2 Emission Factor)*(10^{-6})

Where

Fuel Use = volume of fuel used (scf/year or gal/year)
HHV = Higher Heating Value of fuel (Btu/scf or Btu/gal)
CO_2 Emission Factor = See Table 6

Data Requirement

1. Type of equipment
2. Fuel Use (scf/year or gal/year)
3. HHV of fuel (Btu/scf or Btu/gal)

CH_4 emissions (tonnes/year) = (Fuel Use)*(HHV)*(CH_4 Emission Factor)*(10^{-6})

Where

Fuel Use = volume of fuel used (scf/year or gal/year)
HHV = Higher Heating Value of fuel (Btu/scf or Btu/gal)
CH_4 Emission Factor = See Table 6

Data Requirement

1. Type of equipment
2. Fuel Use (scf/year or gal/year)
3. HHV of fuel (Btu/scf or Btu/gal)

N_2O emissions (tonnes/year) = (Fuel Use)*(HHV)*(N_2O Emission Factor)*(10^{-6})

Where

Fuel Use = volume of fuel used (scf/year or gal/year)
HHV = Higher Heating Value of fuel (Btu/scf or Btu/gal)
N_2O Emission Factor = See Table 6

Data Requirement

1. Type of equipment
2. Fuel Use (scf/year or gal/year)
3. HHV of fuel (Btu/scf or Btu/gal)

Table 6: Combustion Equipment

Equipment Type	CO_2 (tonnes/MMBtu)	CH_4 (tonnes/MMBtu)	N_2O (tonnes/MMBtu)
Natural Gas Fired			
Boilers	0.0534[2]	1.023E-06[4]	9.8E-07[5]
Steam Generators	0.0534[2]	1.023E-06[4]	9.8E-07[5]
Heaters	0.0534[2]	1.023E-06[4]	9.8E-07[5]
Reciprocating Engine			
Two – Stroke Lean	0.0499[3]	6.577E-04[4]	2.3E-06[5]
Four – Stroke Lean	0.0499[3]	5.670E-04[4]	1.4E-06[5]
Four – Stroke Rich	0.0499[3]	1.043E-04[4]	4.5E-07[5]
Turbine	0.0499[3]	3.901E-06[4]	3.8E-06[5]
Diesel Fired			
Reciprocating Engine			
Two – Stroke Lean	0.0744[1]	4E-06[5]	
Two – Stroke Rich	0.0744[1]	4E-06[5]	
Four – Stroke Lean	0.0744[1]	4E-06[5]	
Four – Stroke Rich	0.0744[1]	4E-06[5]	
Gasoline Fired			
Reciprocating Engine			
Two – Stroke Lean	0.0699[1]	1.2E-04[5]	
Two – Stroke Rich	0.0699[1]	1.2E-04[5]	
Four – Stroke Lean	0.0699[1]	3.9-05[5]	
Four – Stroke Rich	0.0699[1]	3.9-05[5]	
Landfill Gas Fired			
Turbine	0.0227[3]		

1. EPA (1996b); 2. EPA (1998); 3. EPA (2000); 4. API (2004); 5. INGAA (2005)

Method 10 – Fuel Based

Combustion calculations for equipment using fuel based emission factors listed in Table 7.

CO_2 emissions (tonnes/year) = (Fuel Use)*(HHV)*(CO_2 Emission Factor)*(10^{-6})

Where

Fuel Use = volume of fuel used (scf/year or gal/year)
HHV = Higher Heating Value of fuel (Btu/scf or Btu/gal)
CO_2 Emission Factor = See Table 7

Data Requirement

1. Fuel Use (scf/year or gal/year)
2. HHV of fuel (Btu/scf or Btu/gal)

CH_4 emissions (tonnes/year) = (Fuel Use)*(HHV)*(CH_4 Emission Factor)*(10^{-6})

Where

Fuel Use = volume of fuel used (scf/year or gal/year)
HHV = Higher Heating Value of fuel (Btu/scf or Btu/gal)
CH_4 Emission Factor = See Table 7

Data Requirement

1. Fuel Use (scf/year or gal/year)
2. HHV of fuel (Btu/scf or Btu/gal)

N_2O emissions (tonnes/year) = (Fuel Use)*(HHV)*(N_2O Emission Factor)*(10^{-6})

Where

Fuel Use = volume of fuel used (scf/year or gal/year)
HHV = Higher Heating Value of fuel (Btu/scf or Btu/gal)
N_2O Emission Factor = See Table 7

Data Requirement

1. Fuel Use (scf/year or gal/year)
2. HHV of fuel (Btu/scf or Btu/gal)

Table 7: Fuels

Fuel Type	CO_2 (tonnes/MMBtu)	CH_4 (tonnes/MMBtu)	N_2O (tonnes/MMBtu)
Natural Gas			
Unspecified	0.05302[1]	9E-07[1]	1E-07[1]
975 to 1,000 Btu/scf	0.05397[1]	9E-07[1]	1E-07[1]
1,000 to 1,025 Btu/scf	0.05287[1]	9E-07[1]	1E-07[1]
1,025 to 1,050 Btu/scf	0.05302[1]	9E-07[1]	1E-07[1]
1,050 to 1,075 Btu/scf	0.05342[1]	9E-07[1]	1E-07[1]
1,075 to 1,100 Btu/scf	0.05368[1]	9E-07[1]	1E-07[1]
> 1,100 Btu/scf	0.05467[1]	9E-07[1]	1E-07[1]
Landfill Gas	0.05203[1]	9E-07[1]	1E-07[1]
Diesel	0.0731[2]	3E-06[1]	6E-07[1]
Liquidfied Petroleum Gas	0.06298[1]	1E-06[1]	1E-07[1]
Propane	0.06302[1]	1E-06[1]	1E-07[1]
Gasoline	0.07083[1]	3E-06[1]	6E-07[1]

1. ARB Manditory Reporting (2008)
2. ARB Manditory Reporting (2008) Distillate Fuel Oil #1, #2, #4

Method 11 – Components

Components for other equipment (e.g. storage tanks) will be backed out of this calculation.

CO_2 emissions (tonnes/year) = (CO_2 EF)*(Number)*(CO_2 Mole Fraction/0.03)

Where

CO_2 EF = See Table 8
Number = Number of components
CO_2 Mole Fraction = (lbmole CO_2)/(lbmole gas)

Data Requirements

1. Mole % CO_2
2. Number of components

CH_4 emissions (tonnes/year) = (CH_4 EF)*(Number)*(CH_4 Mole Fraction/0.788)

Where

CH_4 EF = See Table 8
Number = Number of components
CH_4 Mole Fraction = (lbmole CH_4)/(lbmole gas)

Data Requirements

1. Mole % CH_4
2. Number of components

Table 8: Components

Component Type	Natural Gas[1]	Light Crude[2] (tonnes/component-year)	Heavy Crude[3]
CH_4 (78.8% Methane Assumption)			
Manual Valves	1.759E-04[4]	1.348E-04[4]	1.341E-04[4]
Flanges	1.407E-04[4]	1.703E-04[4]	2.203E-04[4]
Connectors	6.029E-05[4]	7.095E-05[4]	7.661E-05[4]
Open-ended Lines	1.206E-04[4]	1.277E-04[4]	1.436E-04[4]
Threaded Components	6.029E-05[4]	7.095E-05[4]	7.661E-05[4]
Pump Seals	5.004E-03[4]	1.880E-03[4]	5.458E-04[4]
Pressure Relief Valves	7.386E-04[4]	9.294E-04[4]	5.458E-04[4]
Bursting Discs	7.386E-04[4]	9.294E-04[4]	5.458E-04[4]
Diaphragms	7.386E-04[4]	9.294E-04[4]	5.458E-04[4]
Drains	7.386E-04[4]	9.294E-04[4]	5.458E-04[4]
Hatches	7.386E-04[4]	9.294E-04[4]	5.458E-04[4]
Instruments	7.386E-04[4]	9.294E-04[4]	5.458E-04[4]
Meters	7.386E-04[4]	9.294E-04[4]	5.458E-04[4]
Polished Rod Stuffing Boxes	7.386E-04[4]	9.294E-04[4]	5.458E-04[4]
Sight Glasses	7.386E-04[4]	9.294E-04[4]	5.458E-04[4]
Loading Arms	7.386E-04[4]	9.294E-04[4]	5.458E-04[4]
Dump Lever Arm	7.386E-04[4]	9.294E-04[4]	5.458E-04[4]
CO_2 (3% CO_2 Assumption)			
Manual Valves	2.247E-05[4]	1.411E-05[4]	1.404E-05[4]
Flanges	1.473E-05[4]	1.783E-05[4]	2.306E-05[4]
Connectors	6.312E-06[4]	7.428E-06[4]	8.021E-06[4]
Open-ended Lines	1.263E-05[4]	1.337E-05[4]	1.504E-05[4]
Threaded Components	6.312E-06[4]	7.428E-06[4]	8.021E-06[4]
Pump Seals	5.239E-04[4]	1.968E-04[4]	5.715E-05[4]
Pressure Relief Valves	7.733E-05[4]	9.730E-05[4]	5.715E-05[4]
Bursting Discs	7.733E-05[4]	9.730E-05[4]	5.715E-05[4]
Diaphrams	7.733E-05[4]	9.730E-05[4]	5.715E-05[4]
Drains	7.733E-05[4]	9.730E-05[4]	5.715E-05[4]
Hatches	7.733E-05[4]	9.730E-05[4]	5.715E-05[4]
Instruments	7.733E-05[4]	9.730E-05[4]	5.715E-05[4]
Meters	7.733E-05[4]	9.730E-05[4]	5.715E-05[4]
Polished Rod Stuffing Boxes	7.733E-05[4]	9.730E-05[4]	5.715E-05[4]
Sight Glasses	7.733E-05[4]	9.730E-05[4]	5.715E-05[4]
Loading Arms	7.733E-05[4]	9.730E-05[4]	5.715E-05[4]
Dump Lever Arm	7.733E-05[4]	9.730E-05[4]	5.715E-05[4]

1. Assume THC is 70% CH_4; 2. Assume THC is 74% CH_4; 3. Assume THC is 72% CH_4; 4. CAPCOA (1999)

Method 12 – Automated Control Devices

CO_2 emissions (tonnes/year) = (CO_2 Emission Factor)*(CO_2 Mole Fraction/0.03)*(# Devices)

Where

CO_2 Emission Factor = See Table 9
CO_2 Mole Fraction = (lbmole CO_2)/(lbmole gas)
Devices = Number of automated control devices

Data Requirements

1. Mole % CO_2
2. Number of automated control devices

CH_4 emissions (tonnes/year) = (CH_4 Emission Factor)*(CH_4 Mole Fraction/0.788)*(# Devices)

Where

CH_4 Emission Factor = See Table 9
CH_4 Mole Fraction = (lbmole CH_4)/(lbmole gas)
Devices = Number of automated control devices

Data Requirements

1. Mole % CH_4
2. Number of automated control devices

Table 9: Automated Control Devices

Device Type	CH_4 (tonnes/device-year)	% Methane Assumption	CO_2 (tonnes/device-year)	% CO_2 Assumption
Controllers				
Continuous Bleed	3.599[1]	78.8	0.377[1]	3
Intermittent Bleed	1.778[1]	78.8	0.186[1]	3
Low Bleed	0.792[2]	78.8	0.083[2]	3
Actuators - Production				
Piston Valve Operator	7.237E-04[3]	78.8	7.577E-05	3
Hydraulic Valve Operator	4.095E-02[3]	78.8	4.287E-03	3
Turbine Valve Operator	1.086E-02[3]	78.8	1.137E-03	3

1. API (2004); 2. EPA (2003a); 3. EPA (1996a)

Method 13 – Natural Gas Dehydration (Glycol Units)

Vented emissions from glycol dehydrators (CEC 2006).

CO_2 emissions (tonnes/year) = (Throughput)*(EF\0.90)*(CO_2 Mole Fraction)*D

Where

EF = [(0.0066)*(GCR)*(P)*(GAP)] + (SG)
EF units = (Mcf CH_4/year per MMcf gas throughput/day)
EF conversion = [(1 year)/(365 days)]*[(1 MMcf gas)/(10^6 scf gas)]*[(1000 scf CH_4)/(1 Mcf CH_4)]
0.90 = % methane used to create EF (lbmole CH_4)/(lbmole gas)
GCR = glycol circulation rate (gph)
P = flash tank or contactor pressure (psia)
GAP = 2.5 if a gas assist pump is installed or 1.0 if there is no gas assist pump
SG = 0.245 if stripping gas is used or 0 if no stripping gas is used
CO_2 Mole Fraction = (lbmole CO_2)/(lbmole gas)
D = (CH_4 Density)*(lb/453.5 grams)*(1/MW_{CH4})*(MW CO_2)*(tonne/2204.6lb)*(EF conversion)
CH_4 Density = (19.2 grams)/(scf CH_4)
MW CH_4 = (16 lb CH_4)/(lbmole CH_4)
MW CO_2 = (44 lb CO_2)/(lbmole CO_2)

Data Requirements

1. Throughput (scf/year)
2. Input Mole % CO_2
3. Glycol circulation rate (gallons/hour)
4. Flash tank pressure (psia)
5. Contactor pressure (psia)
6. Gas assist pump installation
7. Stripping gas use

CH_4 emissions (tonnes/year) = (Throughput)*(EF\0.90)*(CH_4 Mole Fraction)*D

Where

EF = [(0.0066)*(GCR)*(P)*(GAP)] + (SG)
EF units = (Mcf CH_4/year per MMcf gas throughput/day)
EF conversion = [(1 year)/(365 days)]*[(1 MMcf gas)/(10^6 scf gas)]*[(1000 scf CH_4)/(1 Mcf CH_4)]
0.90 = % methane used to create EF (lbmole CH_4)/(lbmole gas)
GCR = glycol circulation rate (gph)
P = flash tank or contactor pressure (psia)
GAP = 2.5 if a gas assist pump is installed or 1.0 if there is no gas assist pump
SG = 0.245 if stripping gas is used or 0 if no stripping gas is used
CH_4 Mole Fraction = (lbmole CH_4)/(lbmole gas)
D = (CH_4 Density)*(lb/453.5 grams)*(tonne/2204.6lb)*(EF conversion)
CH_4 Density = (19.2 grams)/(scf CH_4)

Data Requirements

1. Throughput (scf/year)
2. Input Mole % CH_4
3. Glycol circulation rate (gallons/hour)
4. Flash tank pressure (psia)
5. Contactor pressure (psia)
6. Gas assist pump installation
7. Stripping gas use

Method 14 – Natural Gas Dehydration (Desiccant Units)

Vented emissions from refilling desiccant (EPA 2003b).

CO_2 emissions (tonnes/year) = (EF)*(CO_2 Mole Fraction)*D

Where

EF = [(P_2)*(G)*(365 days/yr)*(V)]\[(P_1)*(T)]
P_1 = 14.7 psia (atmospheric pressure)
P_2 = (Pressure of Gas (psig)) + 14.7
G = % of Packed Vessel Volume that is Natural Gas
V = Volume of Dehydrator (ft^3)
T = Frequency of Desiccant Replacement (days)
CO_2 Mole Fraction = (lbmole CO_2)/(lbmole gas)
D = (molar volume)*(Molecular Weight CO_2)*(tonne/2204.6lb)
Molar Volume = (1 lbmole gas)/(379.3 scf gas)
Molecular Weight CO_2 = (44 lb CO_2)/(lbmole CO_2)

Data Requirements

1. Mole % CO_2
2. Volume of Dehydrator
3. Pressure of Natural Gas
4. Frequency of Desiccant Replacement
5. % of Packed Vessel Volume that is Natural Gas (45% will be assumed if no value is provided)

CH_4 emissions (tonnes/year) = (EF)*(CH_4 Mole Fraction)*D

Where

EF = [(P_2)*(G)*(365 days/yr)*(V)]\[(P_1)*(T)]
P_1 = 14.7 psia (atmospheric pressure)
P_2 = (Pressure of Gas (psig)) + 14.7
G = % of Packed Vessel Volume that is Natural Gas
V = Volume of Dehydrator (ft^3)
T = Frequency of Desiccant Replacement (days)
CH_4 Mole Fraction = (lbmole CH_4)/(lbmole gas)
D = (molar volume)*(Molecular Weight CH_4)*(tonne/2204.6lb)
Molar Volume = (1 lbmole gas)/(379.3 scf gas)
Molecular Weight CH_4 = (16 lb CH_4)/(lbmole CH_4)

Data Requirements

1. Mole % CH_4
2. Volume of Dehydrator
3. Pressure of Natural Gas
4. Frequency of Desiccant Replacement
5. % of Packed Vessel Volume that is Natural Gas (45% will be assumed if no value is provided)

Method 15 – Natural Gas Dehydration Fugitive Emissions

Fugitive emission calculations using mass balance.

CO_2 emissions (tonnes/year) = (Mass Balance) – (Vented Emissions)

Where

Mass Balance = D*[(Input)*(In CO_2 Mole Fraction) – (Output)*(Out CO_2 Mole Fraction)]
Vented Emissions = Method 13 or Method 14
Input = Input volume (scf/year)
Output = Output volume (scf/year)
In CO_2 Mole Fraction = Input CO_2 Mole Fraction = (lbmole CO_2)/(lbmole gas)
Out CO_2 Mole Fraction = Output CO_2 Mole Fraction = (lbmole CO_2)/(lbmole gas)
D = (molar volume)*(Molecular Weight CO_2)*(tonne/2204.6lb)
Molar Volume = (1 lbmole gas)/(379.3 scf gas)
Molecular Weight CO_2 = (44 lb CO_2)/(lbmole CO_2)

Data Requirements

1. Input volume (scf/year)
2. Output volume (scf/year)
3. Input Mole % CO_2
4. Output Mole % CO_2
5. Vented Emissions

CH_4 emissions (tonnes/year) = (Mass Balance) – (Vented Emissions)

Where

Mass Balance = D*[(Input)*(In CH_4 Mole Fraction) – (Output)*(Out CH_4 Mole Fraction)]
Vented Emissions = Method 13 or Method 14
Input = Input volume (scf/year)
Output = Output volume (scf/year)
In CH_4 Mole Fraction = Input CH_4 Mole Fraction = (lbmole CH_4)/(lbmole gas)
Out CH_4 Mole Fraction = Output CH_4 Mole Fraction = (lbmole CH_4)/(lbmole gas)
D = (molar volume)*(Molecular Weight CH_4)*(tonne/2204.6lb)
Molar Volume = (1 lbmole gas)/(379.3 scf gas)
Molecular Weight CH_4 = (16 lb CH_4)/(lbmole CH_4)

Data Requirements

1. Input volume (scf/year)
2. Output volume (scf/year)
3. Input Mole % CH_4
4. Output Mole % CH_4
5. Vented Emissions

Method 16 –Natural Gas Sweetening/Acid Gas Removal (Solid Material Units)

Vented emissions from refilling solid material (EPA 2003b).

CO_2 emissions (tonnes/year) = (EF)*(CO_2 Mole Fraction)*D

Where

EF = [(P_2)*(G)*(365 days/yr)*(V)]\[(P_1)*(T)]
P_1 = 14.7 psia (atmospheric pressure)
P_2 = (Pressure of Gas (psig)) + 14.7
G = % of Packed Vessel Volume that is Natural Gas
V = Volume of Unit (ft^3)
T = Frequency of Solid Material Replacement (days)
CO_2 Mole Fraction = (lbmole CO_2)/(lbmole gas)
D = (molar volume)*(Molecular Weight CO_2)*(tonne/2204.6lb)
Molar Volume = (1 lbmole gas)/(379.3 scf gas)
Molecular Weight CO_2 = (44 lb CO_2)/(lbmole CO_2)

Data Requirements

1. Input Mole % CO_2
2. Volume of unit
3. Pressure of Natural Gas
4. Frequency of solid material replacement
5. % of Packed Vessel Volume that is Natural Gas (45% will be assumed if no value is provided)

CH_4 emissions (tonnes/year) = (EF)*(CH_4 Mole Fraction)*D

Where

EF = [(P_2)*(G)*(365 days/yr)*(V)]\[(P_1)*(T)]
P_1 = 14.7 psia (atmospheric pressure)
P_2 = (Pressure of Gas (psig)) + 14.7
G = % of Packed Vessel Volume that is Natural Gas
V = Volume of Unit (ft^3)
T = Frequency of Solid Material Replacement (days)
CH_4 Mole Fraction = (lbmole CH_4)/(lbmole gas)
D = (molar volume)*(Molecular Weight CH_4)*(tonne/2204.6lb)
Molar Volume = (1 lbmole gas)/(379.3 scf gas)
Molecular Weight CH_4 = (16 lb CH_4)/(lbmole CH_4)

Data Requirements

1. Input Mole % CH_4
2. Volume of unit
3. Pressure of Natural Gas
4. Frequency of solid material replacement
5. % of Packed Vessel Volume that is Natural Gas (45% will be assumed if no value is provided)

Method 17 – Natural Gas Sweetening/Acid Gas Removal Fugitive Emissions (Solid Material Units)

Fugitive emission calculations using mass balance.

CO_2 emissions (tonnes/year) = (Mass Balance) – (Vented Emissions)

Where

Mass Balance = D*[(Input)*(In CO_2 Mole Fraction) – (Output)*(Out CO_2 Mole Fraction)]
Vented Emissions = Method 16
Input = Input volume (scf/year)
Output = Output volume (scf/year)
In CO_2 Mole Fraction = Input CO_2 Mole Fraction = (lbmole CO_2)/(lbmole gas)
Out CO_2 Mole Fraction = Output CO_2 Mole Fraction = (lbmole CO_2)/(lbmole gas)
D = (molar volume)*(Molecular Weight CO_2)*(tonne/2204.6lb)
Molar Volume = (1 lbmole gas)/(379.3 scf gas)
Molecular Weight CO_2 = (44 lb CO_2)/(lbmole CO_2)

Data Requirements

1. Input volume (scf/year)
2. Output volume (scf/year)
3. Input Mole % CO_2
4. Output Mole % CO_2
5. Vented Emissions

CH_4 emissions (tonnes/year) = (Mass Balance) – (Vented Emissions)

Where

Mass Balance = D*[(Input)*(In CH_4 Mole Fraction) – (Output)*(Out CH_4 Mole Fraction)]
Vented Emissions = Method 16
Input = Input volume (scf/year)
Output = Output volume (scf/year)
In CH_4 Mole Fraction = Input CH_4 Mole Fraction = (lbmole CH_4)/(lbmole gas)
Out CH_4 Mole Fraction = Output CH_4 Mole Fraction = (lbmole CH_4)/(lbmole gas)
D = (molar volume)*(Molecular Weight CH_4)*(tonne/2204.6lb)
Molar Volume = (1 lbmole gas)/(379.3 scf gas)
Molecular Weight CH_4 = (16 lb CH_4)/(lbmole CH_4)

Data Requirements

1. Input volume (scf/year)
2. Output volume (scf/year)
3. Input Mole % CH_4
4. Output Mole % CH_4
5. Vented Emissions

Method 18 – Natural Gas Sweentening/Acid Gas Removal Mass Balance (Non-solid Material Units)

Fugitive emissions from natural gas sweetening or acid gas removal.

CO_2 emissions (tonnes/year) = D*[(Input)*(In CO_2 Mole Fraction) – (Output)*(Out CO_2 Mole Fraction)]

Where

Input = Input volume (scf/year)
Output = Output volume (scf/year)
In CO_2 Mole Fraction = Input CO_2 Mole Fraction = (lbmole CO_2)/(lbmole gas)
Out CO_2 Mole Fraction = Output CO_2 Mole Fraction = (lbmole CO_2)/(lbmole gas)
D = (molar volume)*(Molecular Weight CO_2)*(tonne/2204.6lb)
Molar Volume = (1 lbmole gas)/(379.3 scf gas)
Molecular Weight CO_2 = (44 lb CO_2)/(lbmole CO_2)

Data Requirements

1. Input volume (scf/year)
2. Output volume (scf/year)
3. Input Mole % CO_2
4. Output Mole % CO_2

CH_4 emissions (tonnes/year) = D*[(Input)*(In CH_4 Mole Fraction) – (Output)*(Out CH_4 Mole Fraction)]

Where

Input = Input volume (scf/year)
Output = Output volume (scf/year)
In CH_4 Mole Fraction = Input CH_4 Mole Fraction = (lbmole CH_4)/(lbmole gas)
Out CH_4 Mole Fraction = Output CH_4 Mole Fraction = (lbmole CH_4)/(lbmole gas)
D = (molar volume)*(Molecular Weight CH_4)*(tonne/2204.6lb)
Molar Volume = (1 lbmole gas)/(379.3 scf gas)
Molecular Weight CH_4 = (16 lb CH_4)/(lbmole CH_4)

Data Requirements

1. Input volume (scf/year)
2. Output volume (scf/year)
3. Input Mole % CH_4
4. Output Mole % CH_4

Method 19 – Other Natural Gas Processing

Vented and fugitive emissions from other natural gas processing.

CO_2 emissions (tonnes/year) = D*[(Input)*(In CO_2 Mole Fraction) – (Output)*(Out CO_2 Mole Fraction)]

Where

Input = Input volume (scf/year)
Output = Output volume (scf/year)
In CO_2 Mole Fraction = Input CO_2 Mole Fraction = (lbmole CO_2)/(lbmole gas)
Out CO_2 Mole Fraction = Output CO_2 Mole Fraction = (lbmole CO_2)/(lbmole gas)
D = (molar volume)*(Molecular Weight CO_2)*(tonne/2204.6lb)
Molar Volume = (1 lbmole gas)/(379.3 scf gas)
Molecular Weight CO_2 = (44 lb CO_2)/(lbmole CO_2)

Data Requirements

1. Input volume (scf/year)
2. Output volume (scf/year)
3. Input Mole % CO_2
4. Output Mole % CO_2

CH_4 emissions (tonnes/year) = D*[(Input)*(In CH_4 Mole Fraction) – (Output)*(Out CH_4 Mole Fraction)]

Where

Input = Input volume (scf/year)
Output = Output volume (scf/year)
In CH_4 Mole Fraction = Input CH_4 Mole Fraction = (lbmole CH_4)/(lbmole gas)
Out CH_4 Mole Fraction = Output CH_4 Mole Fraction = (lbmole CH_4)/(lbmole gas)
D = (molar volume)*(Molecular Weight CH_4)*(tonne/2204.6lb)
Molar Volume = (1 lbmole gas)/(379.3 scf gas)
Molecular Weight CH_4 = (16 lb CH_4)/(lbmole CH_4)

Data Requirements

1. Input volume (scf/year)
2. Output volume (scf/year)
3. Input Mole % CH_4
4. Output Mole % CH_4

Method 20 – Natural Gas Compressor Startups

CO_2 emissions (tonnes/year) = (Total Volume of Gas Vented)*(CO_2 Mole Fraction)*D

Where

CO_2 Mole Fraction = (lbmole CO_2)/(lbmole gas)
D = (molar volume)*(Molecular Weight CO_2)*(tonne/2204.6lb)
Molar Volume = (1 lbmole gas)/(379.3 scf gas)
Molecular Weight CO_2 = (44 lb CO_2)/(lbmole CO_2)

Data Requirements

1. Total volume of gas vented (scf)
2. Mole %CO_2

CH_4 emissions (tonnes/year) = (Total Volume of Gas Vented)*(CH_4 Mole Fraction)*D

Where

CH_4 Mole Fraction = (lbmole CH_4)/(lbmole gas)
D = (molar volume)*(Molecular Weight CH_4)*(tonne/2204.6lb)
Molar Volume = (1 lbmole gas)/(379.3 scf gas)
Molecular Weight CH_4 = (16 lb CH_4)/(lbmole CH_4)

Data Requirements

1. Total volume of gas vented (scf)
2. Mole %CH_4

Method 21 – Natural Gas Compressor Blowdowns

CO_2 emissions (tonnes/year) = (Total Volume of Gas Vented)*(CO_2 Mole Fraction)*D

Where

CO_2 Mole Fraction = (lbmole CO_2)/(lbmole gas)
D = (molar volume)*(Molecular Weight CO_2)*(tonne/2204.6lb)
Molar Volume = (1 lbmole gas)/(379.3 scf gas)
Molecular Weight CO_2 = (44 lb CO_2)/(lbmole CO_2)

Data Requirements

1. Total volume of gas vented (scf)
2. Mole %CO_2

CH_4 emissions (tonnes/year) = (Total Volume of Gas Vented)*(CH_4 Mole Fraction)*D

Where

CH_4 Mole Fraction = (lbmole CH_4)/(lbmole gas)
D = (molar volume)*(Molecular Weight CH_4)*(tonne/2204.6lb)
Molar Volume = (1 lbmole gas)/(379.3 scf gas)
Molecular Weight CH_4 = (16 lb CH_4)/(lbmole CH_4)

Data Requirements

1. Total volume of gas vented (scf)
2. Mole %CH_4

Method 22 – Natural Gas Compressor Seals

Fugitive emission calculations for natural gas compressor seals.

CO_2 emissions (tonnes/year) = (CO_2 EF)*(CO_2 Mole Fraction\0.03)*(Seals)*(Usage)

Where

CO_2 EF = See Table 10
CO_2 Mole Fraction = (lbmole CO_2)/(lbmole gas)
Seals = Number seals
Usage = Annual Usage (hours/year)

Data Requirements

1. Mole % CO_2
2. Number of compressor seals
3. Annual usage (hours/year)

CH_4 emissions (tonnes/year) = (CH_4 EF)*(CH_4 Mole Fraction\0.788)*(Seals)*(Usage)

Where

CH_4 EF = See Table 10
CH_4 Mole Fraction = (lbmole CH_4)/(lbmole gas)
Seals = Number of seals
Usage = Annual Usage (hours/year)

Data Requirements

1. Mole % CH_4
2. Number of compressor seals
3. Annual usage (hours/year)

Table 10: Compressor Seals

Device Type	CH_4 (tonnes/component[1]-hr)	% Methane Assumption	CO_2 (tonnes/component[1]-hr)	% CO_2 Assumption
Reciprocating Seal	9.925E-04[2]	78.8	1.039E-04[2]	3
Centrifugal Seal	1.035E-03[2]	78.8	1.083E-04[2]	3
Rotary Seal[3]	1.035E-03[2]	78.8	1.083E-04[2]	3
Screw Seal[3]	1.035E-03[2]	78.8	1.083E-04[2]	3
Vane Seal[3]	1.035E-03[2]	78.8	1.083E-04[2]	3

1. Leak rate for when the compressor is pressurized.
2. EPA (1996a)
3. Assumed Rotary, Screw, and Vane seals emit at the same rate as Centrifugal seals.

Method 23 – Natural Gas Gathering System Pipelines

Fugitive emission calculations for natural gas gathering system pipelines (before the gas meter).

CO_2 emissions (tonnes/year) = (CO_2 EF)*(CO_2 Mole Fraction\0.03)*(Miles) + (Oxidation CO_2 EF)*(Miles)

Where

CO_2 EF = See Table 11
CO_2 Mole Fraction = (lbmole CO_2)/(lbmole gas)
Oxidation CO_2 EF = See Table 10
Miles = miles of natural gas pipeline

Data Requirement

1. Mole % CO_2
2. Mile of natural gas pipeline

CH_4 emissions (tonnes/year) = (CH_4 EF)*(CH_4 Mole Fraction\0.788)*(Miles)

Where

CH_4 EF = See Table 11
CH_4 Mole Fraction = (lbmole CH_4)/(lbmole gas)
Miles = miles of natural gas pipeline

Data Requirements

1. Mole % CH_4
2. Miles of natural gas pipeline

Table 11: Natural Gas Gathering Pipelines

Type	CH_4 (tonnes/mile-yr)	% Methane Assumption	CO_2 (tonnes/mile-yr)	% CO_2 Assumption	Oxidation CO_2 (tonnes/mile-yr)
Gathering Pipeline	0.374[1]	78.8	7.682E-02[1]	3	3.833E-02[1]

1. API (2004)

Method 24 – Natural Gas Gathering System Maintenance Activities

CO_2 emissions (tonnes/year) = (Total Volume of Gas Vented)*(CO_2 Mole Fraction)*D

Where

CO_2 Mole Fraction = (lbmole CO_2)/(lbmole gas)
D = (molar volume)*(Molecular Weight CO_2)*(tonne/2204.6lb)
Molar Volume = (1 lbmole gas)/(379.3 scf gas)
Molecular Weight CO_2 = (44 lb CO_2)/(lbmole CO_2)

Data Requirements

1. Total volume of gas vented (scf/year)
2. Mole % CO_2

CH_4 emissions (tonnes/year) = (Total Volume of Gas Vented)*(CH_4 Mole Fraction)*D

Where

CH_4 Mole Fraction = (lbmole CH_4)/(lbmole gas)
D = (molar volume)*(Molecular Weight CH_4)*(tonne/2204.6lb)
Molar Volume = (1 lbmole gas)/(379.3 scf gas)
Molecular Weight CH_4 = (16 lb CH_4)/(lbmole CH_4)

Data Requirements

1. Total volume of gas vented (scf/year)
2. Mole % CH_4

Method 25 – Pipeline Pigging

Vented emission calculations for natural gas pipeline pigging (EPA 2005).

CO_2 emissions (tonnes/year) = (CO_2 EF)*(CO_2 Mole Fraction\0.03)*(Openings)

Where

CO_2 EF = See Table 12
CO_2 Mole Fraction = (lbmole CO_2)/(lbmole gas)
Openings = Number of time launcher/receiver is opened

Data Requirements

1. Mole % CO_2
2. Number of launcher/receiver openings

Emission Factor Calculation

Equation = $V*[(P_1)*(T_2)]/[(P_2)*(T_1)]$

Where

V = pig laucher/receiver volume
P_1 = gathering line pressure (psia)
P_2 = 14.7 psia (standard surface pressure)
T_1 = temperature of the pig launcher/receiver
T_2 = 60°F (standard surface temperature)

Assumptions (from EPA 2005)

$V = 11.5\ ft^3$ (for an 18 in line)
$P_1 = 315$ psia
$T_1 = 60°F$

CH_4 emissions (tonnes/year) = (CH_4 EF)*(CH_4 Mole Fraction\0.788)*(Openings)

Where

CH_4 EF = See Table 12
CH_4 Mole Fraction = (lbmole CH_4)/(lbmole gas)
Openings = Number of time launcher/receiver is opened

Data Requirements

1. Mole %CH_4
2. Number of launcher/receiver openings

Table 12: Pigging

Device Type	CH_4 (tonnes/opening)	% Methane Assumption	CO_2 (tonnes/opening)	% CO_2 Assumption
Pigging	3.716E-03[1]	78.8	3.89E-04[1]	3

1. EPA (2005)

Method 26 – Tank Cleaning (Separators and Storage Tanks)

Vented emission calculations for the cleaning of crude oil storage tanks or separation units.

CO_2 emissions (tonnes/year) = (V)*(CO_2 Mole Fraction)*(0.1)*(Events)*D

Where

V = Volume of tank (ft^3)
0.1 = Common air district rule that vapors must be reduced at least 90% before opening
CO_2 Mole Fraction = (lbmole CO_2)/(lbmole gas)
D = (molar volume)*(Molecular Weight CO_2)*(tonne/2204.6lb)
Molar Volume = (1 lbmole gas)/(379.3 scf gas)
Molecular Weight CO_2 = (44 lb CH_4)/(lbmole CO_2)
Events = Number of degassing events

Data Requirements

1. Size of tank (bbl/ft^3)
2. Mole % CO_2 in vapor head space
3. Number of degassing events

CH_4 emissions (tonnes/year) = (V)*(CH_4 Mole Fraction)*(0.1)*(Events)*D

Where

V = Volume of tank (ft^3)
0.1 = Common air district rule that vapors must be reduced at least 90% before opening
CH_4 Mole Fraction = (lbmole CH_4)/(lbmole gas)
D = (molar volume)*(Molecular Weight CH_4)*(tonne/2204.6lb)
Molar Volume = (1 lbmole gas)/(379.3 scf gas)
Molecular Weight CH_4 = (16 lb CH_4)/(lbmole CH_4)
Events = Number of degassing events

Data Requirements

1. Size of tank (bbl/ft^3)
2. Mole % CH_4 in vapor head space
3. Number of degassing events

Method 27 – Crude Oil Separation and Storage Tanks

Fugitive emission calculations for crude oil separation and storage tanks. Default CH_4 and CO_2 mole percents are 43% and 4% respectively (HARC, 2006).

CO_2 emissions (tonnes/year) = (TOG)*(% CO_2)

Where

TOG = (Working Loss TOG)+(Breathing Loss TOG)+(Flashing Loss TOG)
% CO_2 = percent CO_2 in the head space vapor concentration

Data Requirements

1. Working Losses (tons/year)
2. Breathing Losses (tons/year)
3. Flashing Losses (tons/year)
4. % CO_2 in the head space vapor concentration

CH_4 emissions (tonnes/year) = (TOG)*(% CH_4)

Where

TOG = (Working Loss TOG)+(Breathing Loss TOG)+(Flashing Loss TOG)
% CH_4 = percent CH_4 in the head space vapor concentration

Data Requirements

1. Working Losses (tons/year)
2. Breathing Losses (tons/year)
3. Flashing Losses (tons/year)
4. % CH_4 in the head space vapor concentration

Method 28 – Sumps and Pits

Fugitive emission calculations for sumps and pits.

CH_4 emissions (tonnes/year) = (CH_4 EF)*(Area)*(Days)

Where

CH_4 EF = See Table 13
Area = area of the sump or pit
Days = Number of Days in Use

Data Requirements

1. Area of sump or pit
2. Sump or pit level (primary, secondary, tertiary)
3. Crude Oil API
4. Number of days sump is in use

Table 13: Sumps

Type	CH_4 (tonnes/ft^2-day)
Light Crude	
Primary Sump	1.297E-05[1]
Secondary Sump	1.814E-06[1]
Tertiary Sump	9.070E-07[1]
Heavy Crude	
Primary Sump	9.480E-06[1]
Secondary Sump	4.672E-06[1]
Tertiary Sump	5.90E-07[1]

1. Kern County APCD (1990)

References

API (2004). American Petroleum Institute. Compendium of Greenhouse Gas Emissions Methodologies for the Oil and Gas Industry. February 2004.

ARB Mandatory Reporting (2008) California Code of Regulation, Title 17, Chapter 1 Subchapter 10, Article 2, Sections 95100-95133.

CAPCOA (1999). California Air Pollution Control Officers Association. California Implementation Guidelines for Fugitive Hydrocarbon Leaks at Petroleum Facilities.

CEC (2006). California Energy Commission. Evaluation of Oil and Gas Sector Greenhouse Gas Emissions Estimation and Reporting. April 2006.

EPA (1996a). US Environmental Protection Agency. Methane Emissions from the Natural Gas Industry. June 1996.

EPA (1996b). US Environmental Protection Agency. Compilation of Air Pollution Emission. AP-42. October 1996.

EPA (1998). US Environmental Protection Agency. Compilation of Air Pollution Emission. AP-42. July 1998.

EPA (2000). US Environmental Protection Agency. Compilation of Air Pollution Emission. AP-42. July 2000.

EPA (2003a). US Environmental Protection Agency. Natural Gas Star Lessons Learned. Options for Reducing Methane Emissions from Pneumatic Devices in the Natural Gas Industry. July 2003

EPA (2003b). US Environmental Protection Agency. Natural Gas Star Lessons Learned. Replacing Glycol Dehydrators with Desiccant Dehydrators. November 2003.

EPA (2005). US Environmental Protection Agency. Natural Gas Star Lessons Learned. Efficient Pigging of Gathering Lines. April 2005.

HARC (2006). Houston Advanced Research Center. VOC Emissions From Oil and Condensate Storage Tanks. October, 2006.

INGAA (2005). Interstate Natural Gas Association of America. Greenhouse Gas Emission Estimation Guidelines for Natural Gas Transmission and Storage, Volume 1.

Kern County APCD (1990). Corrections to CARB's AB2588 Air Toxics "Hot Spots" Technical Guidance Document Table D-1, Page 118. April 25. 1990.

Appendix C: Site Visits and Meetings

California Air Resources Board
Oil and Gas Industry Survey

Site Visits and Meetings

Date	Action
April 2008	• Staff held preliminary public workshop. • Industry and district working groups created.
May 2008	• Staff met with the Western States Petroleum Association (WSPA) and several large crude oil production companies. Staff explained to WSPA our intention to survey the sector and asked for contacts for potential site visits.
June 2008	• Staff met with the California Independent Petroleum Association (CIPA). CIPA was asked for contacts for site visits and staff explained our intention for a survey to create an accurate baseline inventory for regulatory development.
July 2008	• Staff traveled to Bakersfield to tour two large crude oil production fields and several small independent producers. • Staff met with the Independent Oil Producers' Agency (IOPA) to hear their concerns about potential regulation and to inform them of our intention to survey the sector. • Staff toured a large Northern California dry gas field.
August 2008	• Staff toured a natural gas storage field. • Staff traveled to Santa Barbara to tour an onshore processing plant for offshore platforms. • Staff met with Santa Barbara and Ventura air district personnel responsible for permitting oil and gas production facilities. • Staff travelled to Los Angeles to tour two large crude oil producers and to meet with South Coast air district staff. • A draft version of the survey was sent to the industry workgroup for review.
September 2008	• A conference call with the industry workgroup was held to discuss the draft survey. Attendees of the call gave detailed feedback to staff. • A revised version of the survey was then sent out to the industry working group for review and comments. • Staff travelled to the Los Angeles area to tour several oil terminals and to meet with the South Coast air district staff again. • Staff and the industry working group met to discuss the revised draft survey. Staff took detailed comments from the industry and incorporated them into another

	revised draft survey.
October 2008	• Staff travelled to the Santa Barbara area to tour an offshore platform and an onshore processing plant. Staff also toured a large natural gas storage facility in the northern Los Angeles area during that trip. • Staff sent a portion of the revised survey out to the industry working group for their review and comments. • Staff traveled to Bakersfield to attend the Oil and Gas Conference put on by the Department of Conservation, Division of Oil, Gas, and Geothermal Resources. During that trip, a crude oil pipeline storage and heating station was also toured.
November 2008	• Staff received supporting information from the industry working group for changes they had requested of the draft survey. Staff made the appropriate changes to the draft survey. • Staff travelled to Bakersfield to tour a small crude oil production field using a microturbine to generate electricity. Staff also toured a crude oil pipeline processing station.
December 2008	• Staff sent out the draft survey with general instructions for completing the survey and electronic templates to two companies for a pilot survey. • Staff conducted a conference call with our district working group to discuss comments on the draft survey. • Staff toured a natural gas storage field north of Sacramento. • Staff conducted a meeting with the industry working group to discuss emission factors ARB would be using to calculate the baseline GHG emissions inventory for the oil and gas production sector. • Staff continued working with the companies performing the pilot survey and incorporated changes to the draft survey based on comments from the industry and district working group.
January 2009	• Comments from the pilot group were received. Staff revised the draft survey and general instructions based on those comments and sent out a revised version of both to the industry working group. • Staff conducted a conference call with the industry working group. Comments were incorporated where appropriate and staff sent a revised draft survey and general instructions to the industry working group for review and comment.

February 2009	• Staff toured a large natural gas extraction facility just north of Sacramento. • ARB staff mailed out the Oil and Gas Industry Survey on February 19.
March 2009	• On March 26, 2009 staff traveled to Bakersfield to conduct a training seminar for filling out the survey.
April 2009	• Staff answered questions from the industry about the survey. • The Oil and Gas Industry Survey was due on April 30. • Extensive follow-up with facilities started.
May to August 2009	• Staff toured crude oil facilities in the Los Angeles area. • Majority of surveys received. • Staff continued to follow up with facilities with questions on surveys received. • Surveys uploaded to survey database.
September to December 2009	• Staff contacted non-respondents for the survey. • Remaining surveys received and uploaded. • On December 8, 2009 staff conducted a workshop detailing preliminary results from the survey.
January to March 2010	• Staff worked with industry to answer questions about facility emissions. • Staff QA'd and QC'd data and followed up with facilities.
March 18, 2010	• Survey data was frozen.
April to May 2010	• Staff developed survey data and emission summaries. • Staff worked with industry working group on emission summaries.
June 2010 to January 2011	• Draft survey report developed.
April 2011 to June 2011	• Draft survey report review by district and industry working groups.
August 2011	• Draft survey report released for public comment.

Appendix D: Internal Combustion Engine Use Categories

California Air Resources Board
Oil and Gas Industry Survey

Internal Combustion Engine Use Categories

Air Compressor Air Compressor Emergency Instrument Air Compressor	**Cogeneration** Cogen Start Co-generation Co-generation plant Cogeneration Starter	**Compressor** Compressor Portable Compressor
Crane 30 ton Crane Crane Crane Engine East Crane Pedestal crane east West Crane	**Crude Oil Pump** Crude Oil Prod Crude Oil Pump Oil Pump Well Pump Well Pumps Crude Oil Pump/Charge Pump	**Emergency Services** Emergency Fire pump Emergency Firewater Pump Emergency Flood Control Emergency Freshwater Fire Pump Emergency Well Kill Pump Fire Pump Fire Water Pump Firewater Pump
Miscellaneous Acid pump A-Frame Backhoe Blower Broadbill - auxiliary engine Broadbill - main engine Building Heater Concrete saw Crew Boat - auxiliary engine Crew boat - auxiliary engines DPV Crew Boat - main engine Crew boat - main engine DPV Crew boat - main engine spot charter Crew Boat - spot charter Crew Boat -Auxiliary engines DPV Crew Boat -Auxiliary engines DPV Broadbill Crew Boat -Main engines Crew Boat -Main engines DPV Broadbill Crew Boat -Main engines spot charter Dozer E-line unit Forklift Gas Disposal Hydroblaster	Hyperclean Large Forklift LIGHT PLANT Light Tower Loader Engine Manilift Nitrogen Pump Paint Sprayer Pipe Threader Plate compactor Poly Tank Pump motor Portable Welder Portable Wood Grinder Pump Skid Road Grader Engine Roller Single Drum Roller Skip Loader Small Forklift Spare Sprayer STARTING AIR Steam Cleaner Sub-Base Supply boat - Auxiliary engines	Supply boat - main engine Supply boat - main engine (Spot charter) Supply boat - main engine DPV Supply boat - main engine spot charter Supply Boat -Bow thruster and auxiliary engines Supply Boat -Main engines spot charter SupplyBoat -Main engines Survival capsule Survival Capsule #1 Survival Capsule #2 Top Drive Tractor Engine Tractor Loader TRANSFER PUMP Truck Engine Vibe Weed Eater Welder Welding Machine

Power Generation Backup Generator Electric Generator Electrical Generator Emergency Emergency drilling generator Emergency Generator emergency power Emergency Power Generator Emergency production generator Emergency response - main and auxiliary Gen House	 Gen Set Generator Generators Hydraulic Power Unit Portable Generator Power Generation Power Generator Power Unit Standby Generator starter engine Turbine Starter	**Pump** Hydraulic Pump Lift Pump Pump Pump Unit Test Pump Wash Pump
Water Pump Water Injection Pump Water Pump Engine Water Transfer Pump	**Well Servicing** Baker/Apollo Injecting Unit BJ Cement Unit Blackstart Engine Cement Pump Circulating Pump Circulation pump Cmt. Bulk Trailer Coiled Tubing Powerpack CTU Draw Works Drum Vibratory Roller Emergency drilling engine Fluid Pump Foam unit	 Foamer Mud Pump Mud Pump Driver Portable Mud Pump Portable Power Swivel Power Pumping Unit Power Swivel Produced Water Production Rig Rig Engine Rig Power Stang Pump Well Kill Pump Engine Workover Rig

Appendix E: Separator Type Categories

California Air Resources Board
Oil and Gas Industry Survey

Separator Type Categories

Condensate tank Condensate Accumulator Condensate tank Condensate vessel Condensate	**Free Water Knockout** Free Water Knockout	**Heater/Treater** Boiler Heat Exchanger Heater/Treater Heater-PU
Crude Oil Separator		
Clean Out Tank Clean Up Tank Crude Oil Tank Crude Stock Tank Crude Tank Dirty Oil Tank Disc Pot	Discharge Drip Pot Vessel Drip Vessel Oil Water Separator overflow drain tank Skim oil tank skim tank Skim Water Tank	Skimmer skims tank Stand-by Surge/Skim oil tank Wet oil reject tank Wet oil tank Production Unit
Gas Separator		
Absorber Casing Collection Separator Casing Gas Scrubber Casing Gas Separator Contactor Dehydrator Flare Knock Out Drum Flare Separator Vessel	Gas Scrubber Flash Drum Flow Splitter Flowsplitter Fuel Gas Scrubber Gas Knockout Gas Oil Separator	Gas Separator Gas Trap Vessel Glycol Catch Trap Glycol separator Inlet Scrubber Reboiler Spherical Separator
Horizontal Separator Horizontal Horizontal Separator Horizontal Separators Horizontal test trap Horizontal Vessel	**Scrubber** Loading Rack Vapor Recovery Suction Scrubber Sales gas scrubber Scrubber	Suction Bottle Suction Drip Pot Suction Pot Suction Scrubber
Produced Water Tank		
Clarification Tank Clarifier Clarifier Tank Depurator Floatation Unit Flotation Cell Induced Static Floatation	Induced Static Flotation Produced Water Produced Water Clarifier Produced Water Tank Production Inlet Drum Reject oil / produced water Reject tank	Waste Water Tank Wastewater Surge Tank Wastewater Tank Water Mixing Tank Water Tank Water
Separator		
Cone bottom tank Methanol Tank Natural Gasoline Bullet Other - No Production Equipment POT Pressure Vessel	Rerun Tanks Separator Stripper Feed Separator Tank Test Tank Tote Tank	Treater, unheated Vapor Recovery Vapor Recovery Unit Vaporizer Vessel Blow Tank
Settling tanks Sand Water Tank Settling tanks Slop Tank Sludge Collection Tank Sludge Tank Slug Catcher solids tank	**Shipping Tank** Shipping Tank Stock Tank Storage Tank	**Surge Tank** Injection Surge Tank Surge Drum surge tank

Stage Separator		**Trap Separator**
1st Stage Discharge	3rd Stage Discharge Scrubber	Ball Separator
1st Stage Discharge Bottle	3rd Stage Suc Drum	Ball Trap
1st Stage Suction Bottle	3rd Stage Suction Bottle	DBL Ball Trap
1st Stage Suction Scrubber	3rd Stage Suction Scrubber	Gage Trap
2nd Stage Discharge	4th Stage Discharge Drum	Inlet Gas Trap
2nd Stage Suction	4th Stage Suc Drum	Master Trap
2nd Stage Suction Bottle	Compressor Interstage Scrubber	Master Trap / Scrubber
2nd Stage Suction Scrubber	Compressor Interstage Separator	
3-Phase	Three stage clarifier	
3rd Stage Discharge Bottle		
Vertical Separator	**Wemco**	**Wash Tank**
Vertical	Wemco	Wash Tank
Vertical Separator	Wemco Flotation cell	**Well Tester**
Vertical Vessel	Wemco holding tank	Automatic Well Tester
	Wemco surge tank	Well Test separator