Investigating Methane Emissions from California's Natural Gas System

Yu Hou, Guido Franco
Climate Change and Environmental Research
Energy Research and Development Division
California Energy Commission

Methane Emissions from California's Natural Gas System: Challenges and Solutions
June 6, 2016

Outline

- Historical context: Energy Commission's prior research on methane emissions from California's natural gas* system
- Overview of PIER (Public Interest Energy Research) Natural Gas research on methane emissions
- Upcoming project and next steps

*Natural gas is mostly methane (CH_4) with small quantities of ethane (C_2H_6) and other compounds

Historical Context

Dimitri Otis/Photographer's Choice/Getty Images

Ambient Methane Measurements

Courtesy of Dr. Marc Fischer, LBNL

- Institution: Lawrence Berkeley National Laboratory
- Instrumented two communication towers (Walnut Grove and Sutro) to measure methane concentration
- The Air Resource Board continued and expanded the measurements

nature International weekly journal of science

comments on this story

Stories by subject
- Earth and Environment

Stories by keywords
- climate change

This article elsewhere
Blogs linking to this article
Add to Digg
Add to Facebook
Add to Newsvine
Add to Del.icio.us
Add to Twitter

Published online 24 October 2007 | *Nature* **449**, 960 (2007) | doi:10.1038/449960b

News in Brief

Greenhouse-gas sensors tower over California

California has begun installing regional greenhouse-gas detection systems in metropolitan areas, becoming the first US state to gather such regional data.

Sensors have been placed on Sutro Tower in San Francisco and Richland Tower in the Sacramento suburbs as part of the California Greenhouse Gas Emissions Project, a collaboration between state and federal agencies and universities. They measure greenhouse-gas concentrations twice a day.

Sutro Tower in San Francisco hosts the first of California's regional greenhouse-gas detectors.

S. Ragan/AP

"California….becoming the **first** US state to gather such regional data"
Nature. **October 2007**

Classical Schematic Representation of the Natural Gas System

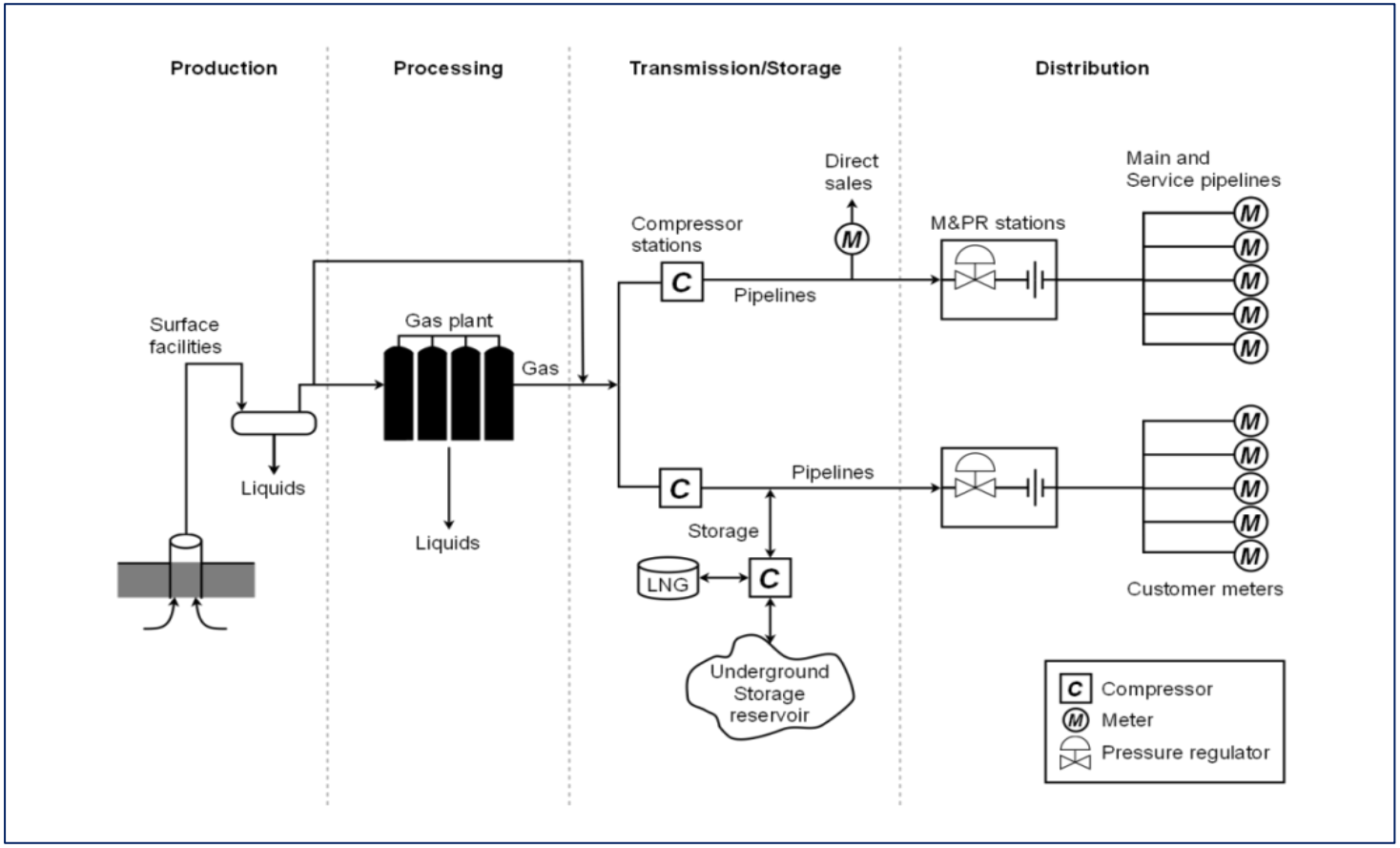

Reproduced from an EPA Report

Revised Schematic Representation of the Natural Gas System

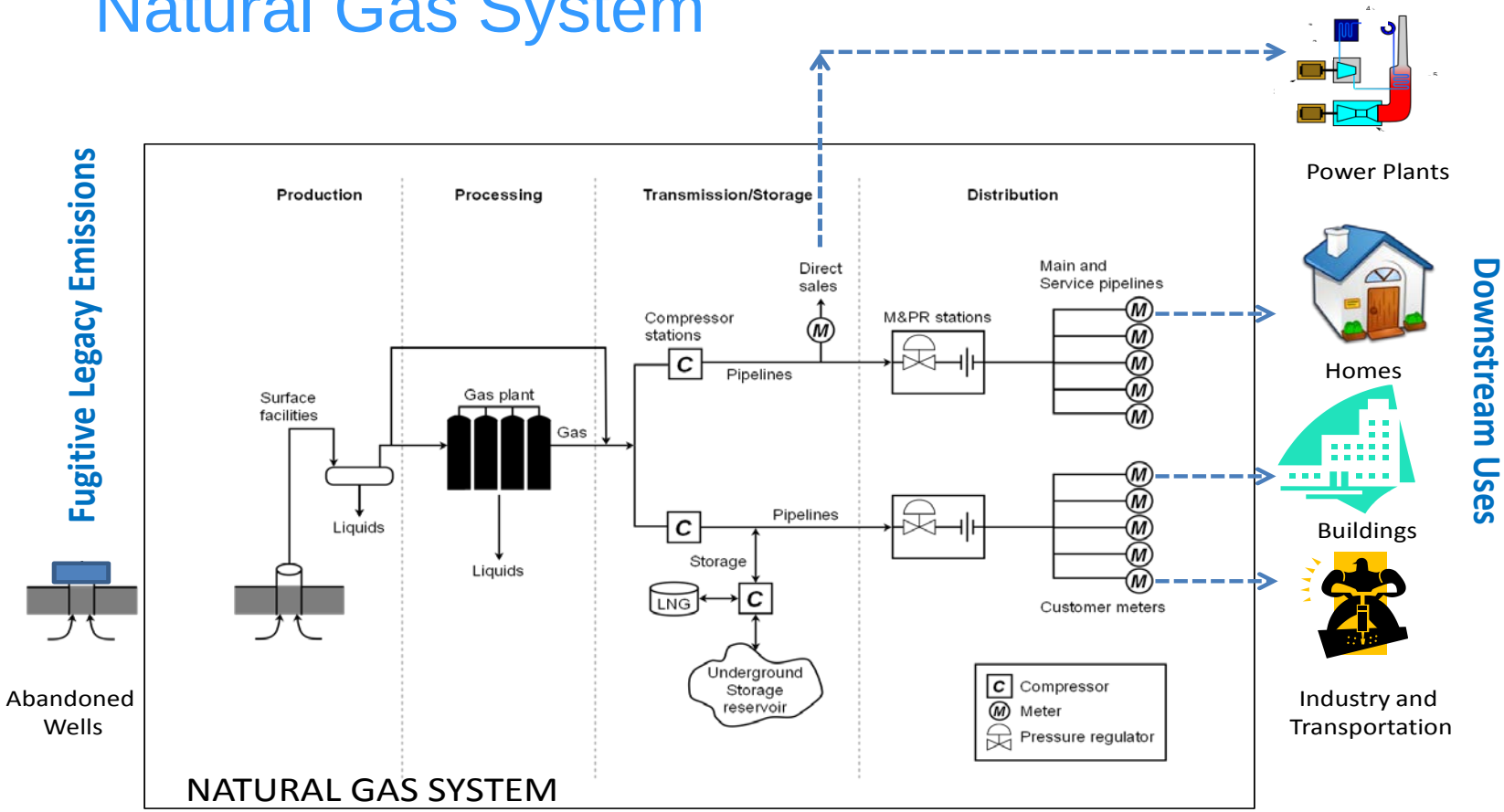

Franco, Ziaja, Hou, Bining. Methane Emissions Associated with Natural Gas Consumption in California. Draft Staff Paper. 2015

Overview of PIER Natural Gas Projects

PUBLIC INTEREST ENERGY RESEARCH

"Research Powers the Future"

Methane Emission Measurements in the Natural Gas System

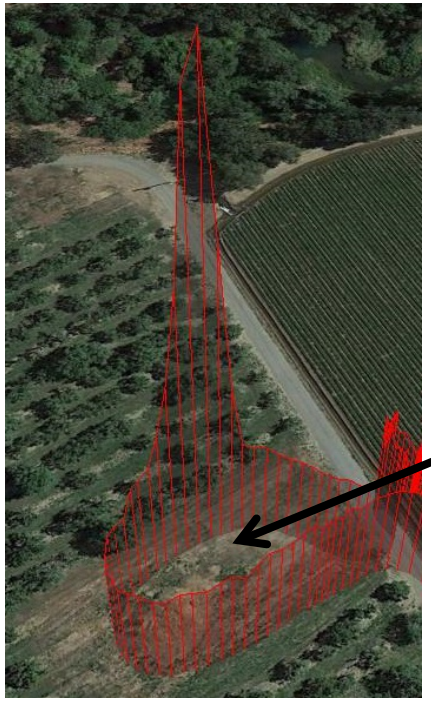

Capped well

Courtesy of Dr. Marc Fischer, LBNL

LBNL Mobile System

Other sources tested: underground storage units, NG vehicle fueling stations, ~10 homes, Refineries (aircraft), NG fields (aircraft)

Emission from Homes (LBNL)

- Preliminary test indicate notable emissions from homes
- Measurements in ~75 additional homes
- Data also indicates methane from incomplete combustion of home appliances

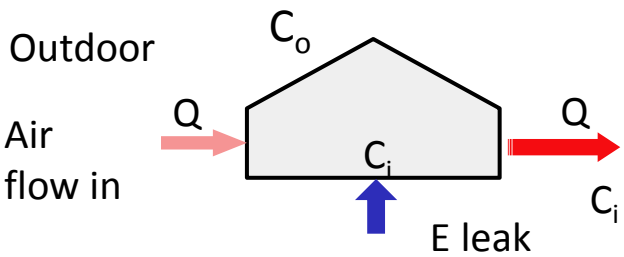

Measured indoor (white) and outdoor (grey) methane during calibrated indoor leak (red)

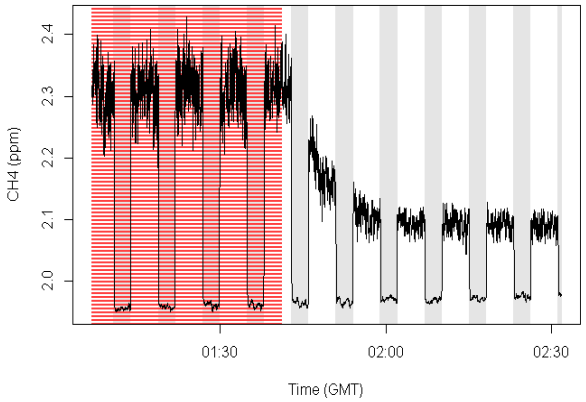

Source: LBNL

Courtesy of Dr. Marc Fischer, LBNL

Emission from Buildings (GTI, ICF)

- Field measurements of buildings from multiple regions in California
- Gas Technology Institute plans to test approximately 40 restaurants and healthcare facilities
- ICF International plans to conduct tests in other building types (e.g., schools)
- Appliances will be also tested
- Expected completion: 2019

Emission from Natural Gas Pipeline and Storage Facilities

- Validated by controlled release
  - Methane release rate: ~15 kg hr^{-1}
- Use of an ethane sensor to distinguish leaks of natural gas from other sources

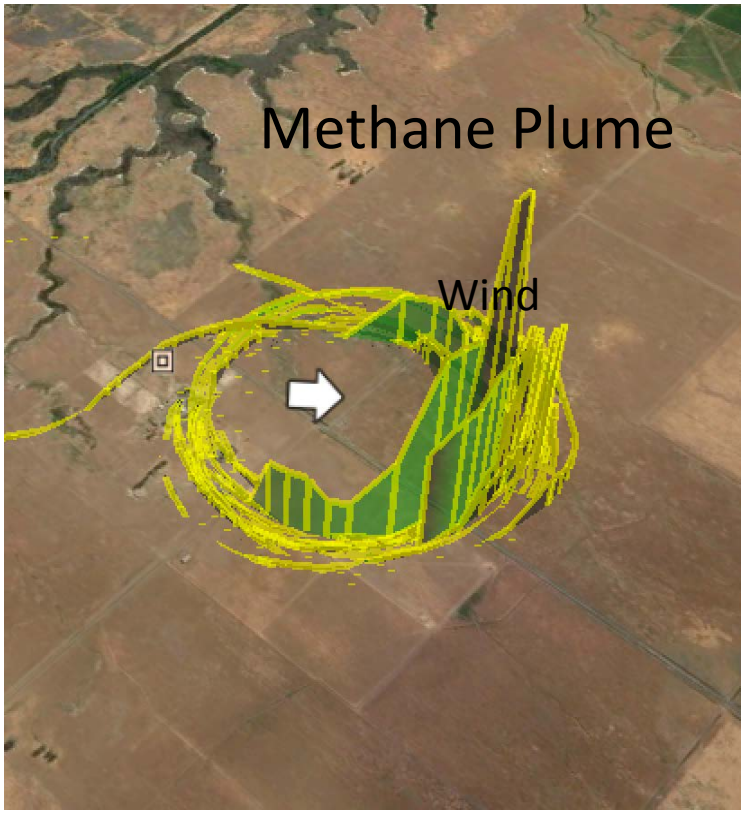

Courtesy of Dr. Steven Conley, UCD

Natural Gas Storage Facilities

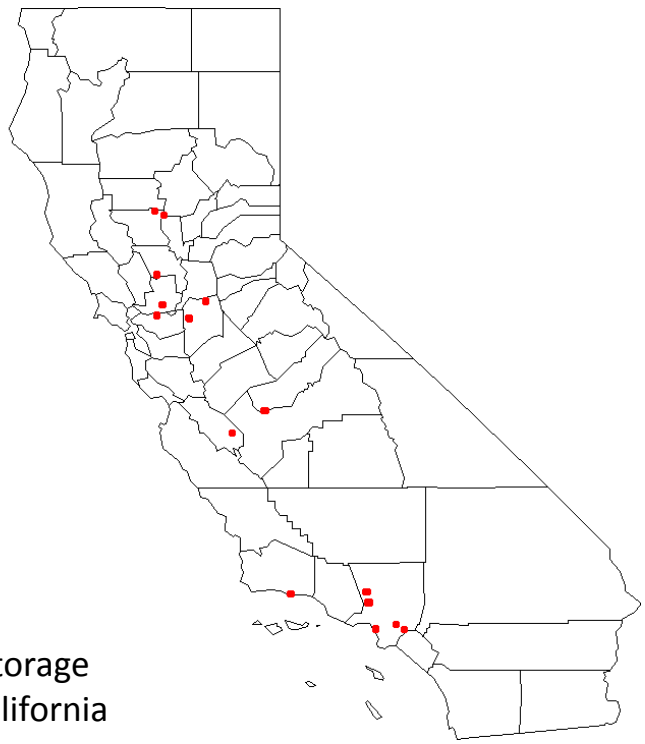

Natural Gas Storage Facilities in California

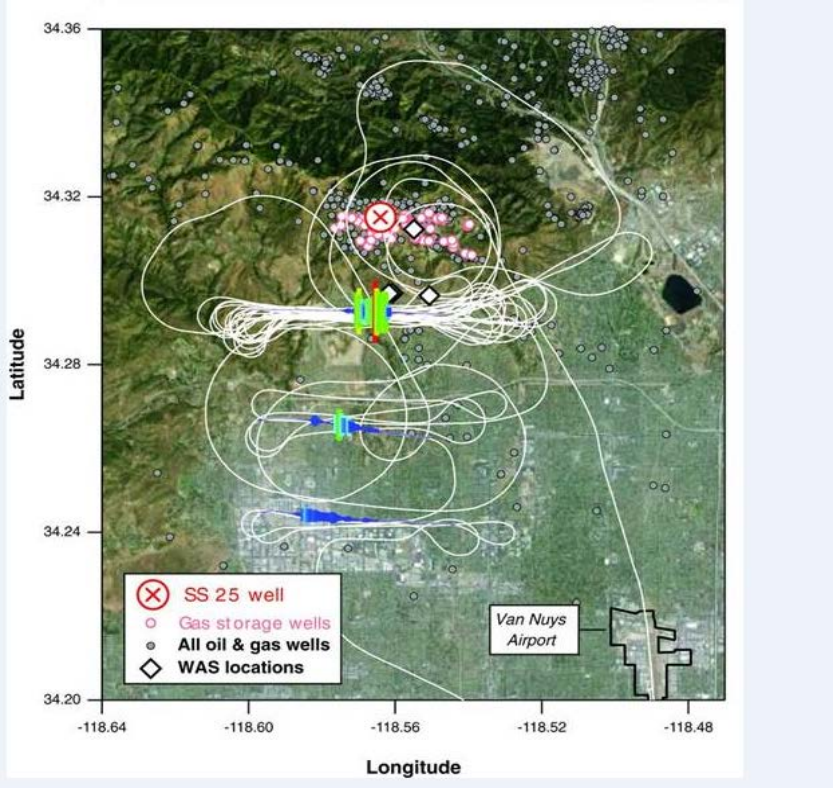

Publication in *Science*

GAS INFRASTRUCTURE

Methane emissions from the 2015 Aliso Canyon blowout in Los Angeles, CA

S. Conley,[1,2]*† G. Franco,[3] I. Faloona,[2] D. R. Blake,[4] J. Peischl,[5,6] T. B. Ryerson[6]†

Single-point failures of natural gas infrastructure can hamper methane emission control strategies designed to mitigate climate change. The 23 October 2015 blowout of a well connected to the Aliso Canyon underground storage facility in California resulted in a massive release of natural gas. Analysis of methane and ethane data from dozens of plume transects, collected during 13 research-aircraft flights between 7 November 2015 and 13 February 2016, shows atmospheric leak rates of up to 60 metric tons of methane and 4.5 metric tons of ethane per hour. At its peak, this blowout effectively doubled the methane emission rate of the entire Los Angeles basin and, in total, released 97,100 metric tons of methane to the atmosphere.

Upcoming Project and Next Steps

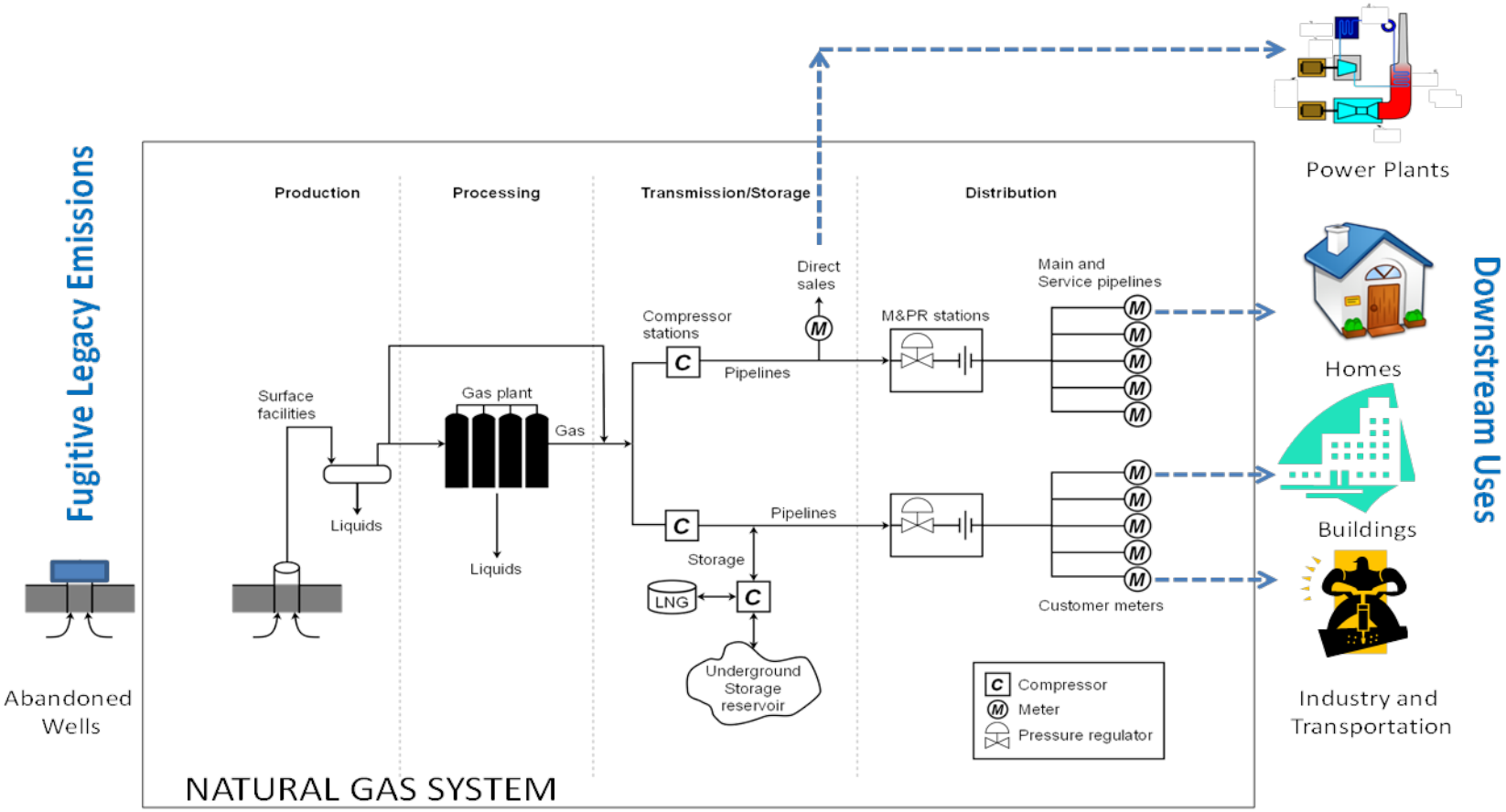

ARB-NASA-CEC Joint Effort

- NASA/JPL Methane Survey Project
- Collaborative effort between the ARB and the Energy Commission
- The Energy Commission project will focus on the natural gas system
- Coordinating with Division of Oil, Gas and Geothermal Resources (DOGGR)
- Project will identify large emitters

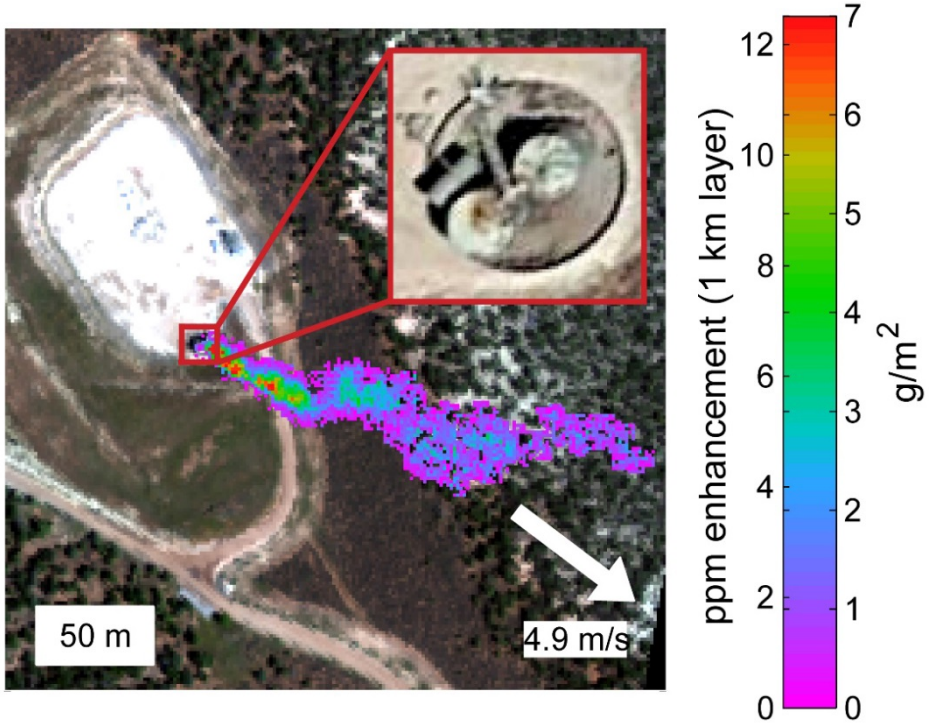

Source: Aubrey et al., NASA, 2015

NASA CL#16-2304

Natural Gas Research Plan

- After-the-meter emissions in Industrial and power sectors
- Groundwater related subsidence impacts on the natural gas system:
  - underground storage Facilities
  - pipelines
  - abandoned natural gas wells

2 year old well (drilled 2010). Land surface shows 2 feet of subsidence (well location shown on map). Photo courtesy Sarge Green, California Water Institute.

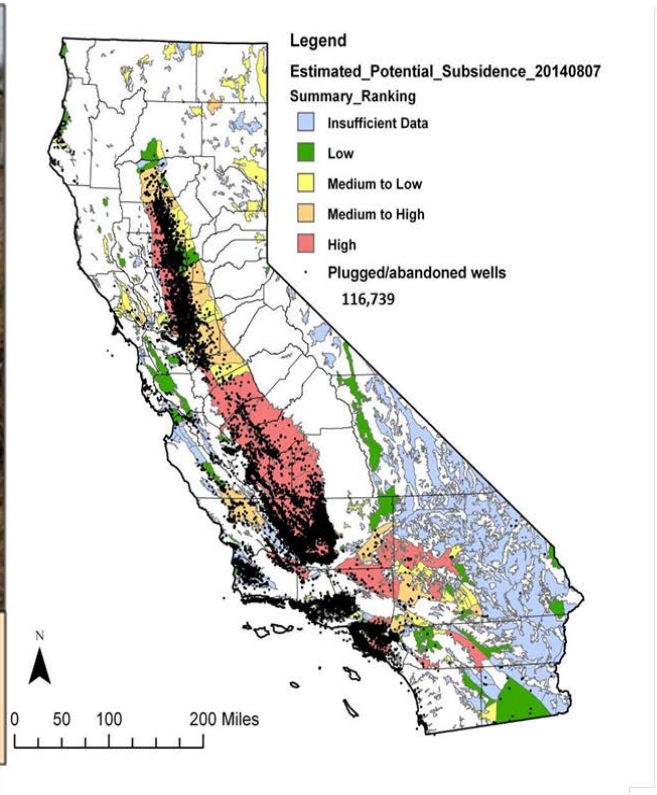

Summary

- The Energy Commission has been working on this topic for a long time
- Progress made in identification and characterization of the emission sources, measurement techniques. However, much work is still needed
- Working closely with ARB, DOGGR and other entities, the Energy Commission continue to support research in this topic area through the PIER Natural Gas program

Thank you!

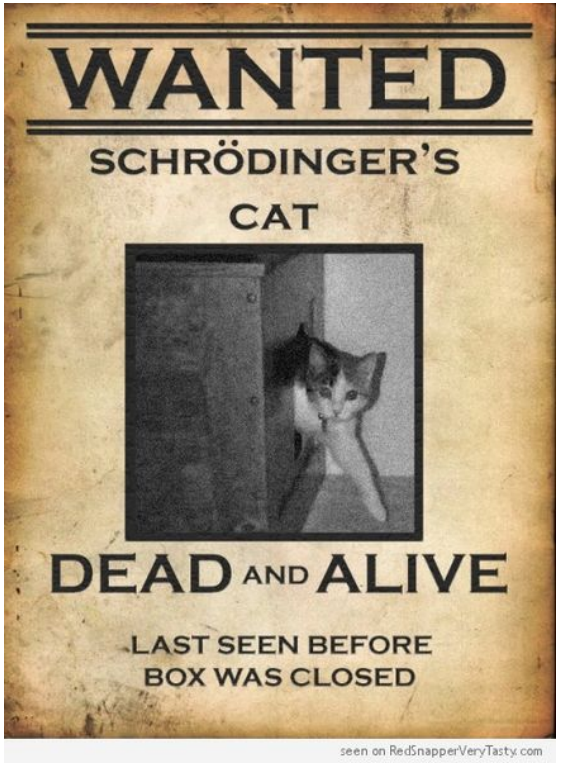

DISCLAIMER
A staff member of the California Energy Commission prepared this presentation. As such, it does not necessarily represent the views of the Energy Commission, its employees, or the State of California. The Energy Commission, the State of California, its employees, contractors and subcontractors make no warrant, express or implied, and assume no legal liability for the information in this presentation; nor does any party represent that the uses of this information will not infringe upon privately owned rights. This presentation has not been approved or disapproved by the Energy Commission nor has the Commission passed upon the accuracy or adequacy of the information in this presentation.