Guidance for Missing Data Substitution Procedures in Section 95129

For the California's mandatory greenhouse gas reporting regulation

This document provides guidance on the missing data substitution requirements as specified in section 95129 of the current Regulation for the Mandatory Reporting of Greenhouse Gas Emissions (reporting regulation or MRR), title 17, California Code of Regulations, sections 95100-95158 for 2013 data reported in 2014 and for data reported in future years.

The California Air Resources Board (ARB) first approved the mandatory reporting regulation in 2007, with revisions in 2010, 2012, and 2013.[1] The 2013 MRR revisions became effective on January 1, 2014. **No substantive changes were made to this guidance document in 2014.**

This guidance document outlines the regulation sections for missing data substitution procedures (Section 1 below), explains the circumstances which result in the need to use the missing data substitution procedures (Section 2), provides answers to some frequently asked questions (Section 3), and includes illustrative examples as additional guidance (Section 4).

In addition to minor clarification to the 2012 MRR, the 2013 amendments added a default factor for liquids and solids not in Table 1 of §95129 when historical data is not available for replacing missing data.

1. Regulatory Sections Containing Missing Data Substitution Procedures

Section 95129 of the reporting regulation provides requirements for missing data substitution for stationary fuel combustion (SFC) sources, including electricity generating units, and emissions reported using a Continuous Emissions Monitoring System (CEMS). For process and vented emission sources, refer to the missing data procedures in the respective regulation sections that are applicable to your specific industry sector(s). Table 1 provides a list of references to all the missing data procedures in the reporting regulation. This guidance document only pertains to the data substitution procedures in section 95129.

[1] The rulemaking documents for the *2010 and 2012 versions* are available at http://www.arb.ca.gov/cc/reporting/ghg-rep/regulation/mrr_regulation.htm

Table 1. Missing Data Substitution Procedure References

Rule Section	Emission Source or Data Element
95129(a)	Part 75 units
95129(b)	Units equipped with CEMS (Tier 4 of Subpart C)
95129(c)	Fuel characteristic data for stationary fuel combustion sources
95129(d)	Fuel consumption data for stationary fuel combustion sources
95129(e)	Steam production data that are used as the basis for emissions calculation
95129(f)	Procedure for establishing load ranges
95129(g)	Alternate load range (must be approved by ARB Executive Officer)
95129(h)	Interim fuel analytical data collection procedure during equipment breakdowns
95129(i)	Interim data collection procedure during breakdown for unit equipped with CEMS (Tier 4 of Subpart C)
95110(c)	Cement production, non-SFC sources
95113(k)	Petroleum refinery, non-SFC sources
95114(h)	Hydrogen production, non-SFC sources
95115(l)	points to section 95129 for all SFC sources
95116(c)	Glass production, non-SFC sources
95117(c)	Lime manufacturing, non-SFC sources
95118(c)	Nitric acid production, non-SFC sources
95119(c)	Pulp & paper manufacturing, non-SFC sources
95120(c)	Iron & steel production, non-SFC sources
95121(e) / 40 CFR §98.395	Supplier of transportation fuel
95122(e) / 40 CFR §98.405	Supplier of natural gas, natural gas liquids, liquefied petroleum gas
95123(b)	Supplier of CO_2
95124(c)	Lead Production
95155(a)(2)	Oil and gas system, non-SFC sources

Note: This guidance document pertains only to the missing data substitution procedures in section 95129.

2. When Do I Need to Use Section 95129 to Substitute Missing Data?

A missing data period is defined by section 95102(a) as a time period when a piece of data is:

- not collected, or
- invalid, or
- collected while the measurement device is not in compliance with the applicable quality-assurance requirements (see section 95103(k)).

Not all missing data situations require the use of data substitution procedures in section 95129. In some situations, the procedures in section 95129 are specified as one of the options for missing data substitution that the facility operator may choose. Facility operators should check whether the missing data substitution requirements are triggered before applying the methods in section 95129. Guidance for determining whether a situation requires the use of the section 95129 procedures is provided below.

2.1. Sources Not Required to Meet the Calibration and Accuracy Standard

For the following emission sources that are not required to meet the calibration and accuracy standards specified in section 95103(k), facility operators have the choice of either following section 98.35 of Title 40 of the Code of Federal Regulations (40 CFR) or the methods in section 95129:

- Any emission sources in a facility that qualifies for abbreviated reporting
- Emission units that combust only exempt biomass-derived fuels
- De minimis sources

2.2. Fuel Characteristic Data

For fuel characteristic data (carbon content, high heat value, and molecular weight) that are used to calculate emissions that are subject to the calibration and accuracy standards, the facility operator must first demonstrate every reasonable effort to obtain a fuel characteristic data capture rate of 100%. Time periods during which fuels were not combusted are not included in the calculation of data capture rate, but a missing data period is the entire sampling period (e.g., week, month, or quarter) for which corresponding fuel characteristic data are not obtained.

The section 95129(c) procedures are required only if all of the following alternatives to obtaining valid data have been exhausted:

- If the original sample is still available for a re-analysis, reanalyze the original sample.
- If a backup sample from the same sampling period is available, analyze the backup sample.
- If the sampling period has not passed, obtain valid data from a replacement sample. For a semiannual sampling frequency, consecutive samples must be taken at least 4 months apart. For a quarterly sampling frequency, consecutive samples must be taken at least 30 days apart (40 CFR §98.35(a)-(b)).
- If the fuel supplier maintains fuel characteristic data that meet the requirements of the regulation, obtain data from the fuel supplier.

2.3. Fuel Consumption Data - Applicability

For fuel consumption data used to calculate emissions that are subject to the calibration and accuracy standard of section 95103(k), the facility operator must demonstrate every reasonable effort to obtain a total facility fuel consumption data capture rate of 100%. Time periods during which fuels were not combusted are not included in the calculation of data capture rate. The section 95129(d) requirements are triggered only during time periods when the *total facility* fuel consumption is not completely and accurately known. Facility operators may use any combination of fuel measurement devices to demonstrate that the total facility fuel consumption is completely and accurately known for any given time period, but all fuel measurement devices used to sum to the facility total must *individually* be in compliance with the applicable quality-assurance requirements of section 95103(k). See also Examples 1 to 7 for additional guidance.

Missing data periods generally fall into two types. The applicability of the missing data substitution provisions under the two types of situations are describe below:

<u>Situation 1:</u> *A time period during which the total facility fuel consumption data are completely and accurately known, but fuel consumption data at the unit-level are missing or invalid.*

In this situation, the requirement to use the procedures in section 95129(d)(1)-(3) is not triggered for this time period. Facility operators have the following options to fill in the missing unit-level data.

- If there are upstream or downstream fuel measurement devices that meet the calibration and accuracy requirements of section 95103(k), the operator may use any combinations of these upstream/downstream devices to reconstruct the missing unit-level data for this time period. (Examples 1 and 2)

- Along the main fuel line and its downstream branches of fuel lines, if there are measurement devices that meet the requirements of section 95103(k) that would enable the operator to triangulate the missing unit-level fuel consumption, the operator may calculate the missing unit-level fuel consumption by subtracting the upstream fuel quantity by the fuel quantities measured at parallel branches of the fuel line. (Examples 5 and 7)

- If there is an upstream fuel measurement device that meets the requirements of section 95103(k) for the time period, but there are no lower-level fuel measurement devices available for directly triangulating the missing unit-level data, the operator may use an engineering estimation to calculate the missing data (95129(d)). Acceptable engineering estimation should utilize other available data parameters that are routinely measured at the facility (e.g., electrical load, steam production, operating hours, or production output). The operator must be able to demonstrate to the verifier that the chosen engineering estimation method is reasonable and based on good engineering

principles, and the estimated fuel quantities at the lower level must add up to the accurate upstream total. (Examples 5 and 7)

- If the facility operators choose not to use any of the above options, they can follow the procedures in section 95129(d)(1)-(3).

Situation 2: *A time period during which the total facility fuel consumption data are not completely and accurately known, and there is no combination of other fuel measurement devices that meet the calibration and accuracy standard for the operator to reconstruct the total facility fuel consumption quantity.*

In this situation, the facility operator should immediately take corrective action to bring the missing data period to an end as quickly as possible. This could include installing a temporary meter that meets the calibration and accuracy standard of section 95103(k) to collect accurate fuel consumption data while the existing meter is down (Examples 3, 4, and 6). Alternatively, the operators may calibrate any combinations of existing upstream or downstream meters so Situation 1 applies (Examples 4 and 6). Otherwise, the operator is required to use the procedures in section 95129(d)(1)-(3) for this time period.

If the facility operator opts for using a temporary meter or chooses to calibrate existing upstream/downstream meters, the fuel quantities measured by the temporary meter and the calibrated upstream/downstream meters are considered valid data that are not missing. However, for the time period after the failure of the original meter and before the complete installation of the temporary meter or the calibration of existing upstream/downstream meters, the use of the procedures in section 95129(d)(1)-(3) is required because this time period is considered a missing data period.

The facility operator must keep calibration records of meters (including temporary meter and upstream/downstream meters that are calibrated during the missing data event) to demonstrate compliance with the calibration and accuracy requirements of the regulation. If the operator is not able to demonstrate the accuracy of the fuel measurements to the satisfaction of the verifier, the operator is required to use the procedures in section 95129(d)(1)-(3).

2.4. Fuel Consumption Data - Eligibility for Each Of the Three Procedures

Section 95129(d) provides three procedures for substituting missing data. Before using any of these procedures, the operator must have met the eligibility criteria of the procedure. If the operator is eligible for more than one method in section 95129(d)(1)-(3), the operator has the option to choose one of the applicable methods. The eligibility criteria for each of the three procedures are summarized below:

1. *Eligibility Criteria for 95129(d)(1) - Continuous Fuel Flow Rate Data Using Load Ranges*

A source must meet all of the following criteria to be eligible for using the method in 95129(d)(1):

- The source combusts gaseous or liquid fuels.
- The source produces electrical or thermal output.
- The source uses a fuel flowmeter system to continuously measure fuel flow rate.
- The source is equipped with a data acquisition and handling system (DAHS) that continuously records fuel flow rates and measured electrical and thermal output on an hourly basis (which enables segregation of the fuel flow rate data into bins).

2. *Eligibility Criteria for 95129(d)(2) - Fuel Consumption Data Without Load Ranges*

A source must meet all of the following criteria to be eligible for using the method in section 95129(d)(2). Eligibility is determined on a per-fuel basis.

- The facility operator has established and implemented a fuel monitoring plan as a part of the GHG Monitoring Plan specified in section 95105(c)(10).
- The facility operator has monitored fuel measurement equipment and maintained records of its proper operation by recording fuel consumption quantities at least weekly. For fuels that are combusted less than 180 days in a calendar year, the operator must record fuel consumption at least daily on each day the fuel is combusted. Data collected by a DAHS at a measurement frequency shorter than weekly can be used to meet this criterion.
- The facility operator has compiled records of fuel consumption that are sufficient for the application of the procedures in this paragraph.

3. *Eligibility Criteria for 95129(d)(3) - Alternate Missing Data Procedure for Fuel Consumption Data*

If a source does not meet the eligibility criteria for using the procedures in sections 95129(d)(1) and (2), the operator must use the method in section 95129(d)(3) to substitute missing data. All stationary fuel combustion sources are eligible for using the method in section 95129(d)(3). However, facility operators are encouraged to use the options described in the previous sub-sections before using the more conservative missing data method described in section 95129(d)(3).

3. Frequently Asked Questions

Q1. A stationary fuel combustion unit does not produce electricity or steam, and there are no other fuel meters upstream or downstream. It has some fuel consumption data missing and is subject to the substitution procedure in paragraph 95129(d)(2)(A). If the data capture rate is ≥95%, is it acceptable to use the average of the data points before and after the missing data period?

Answer:

Yes, the operator may use the average of the data points before and after the missing data period if the data capture rate is ≥95%.

Alternatively, the reporter can also come up with other estimation approaches. The best available estimation must be based on operational data actually measured/recorded at the unit. (The data recorded in the "before and after" hours and unit operating hours both fall into that category.) If there is reason to think that the "before and after" average may not be representative of the data period, the reporter should look to other available process data or production data that are routinely measured and recorded at the unit, and use those as the basis for estimation. The reporter needs to demonstrate to the verifier that their chosen estimation method is reasonable and based on good engineering principles, and is expected to produce a reasonably accurate estimate.

Q2. For a fuel combustion source, if the regulation requires at least a daily fuel characteristic data measurement, but the facility has instrumentation and DAHS that collect hourly data, should the data capture rate be determined based on the hourly data or based on the number of days with at least one valid data point?

Answer:

This emission unit potentially has 8,760 hourly fuel sample data (in a non-leap year). The facility operator may choose to use all the available hourly data in the calculation to get a more accurate representation of actual data capture rate. If a daily average can be calculated that is representative of that day's operations, the daily average could be used to replace the missing data for that day if more than 90% of the data was captured based on the hourly data. If the operator chooses to identify a daily average by taking a weighted average for each 24-hour period, the number of samples would be the number of operating days (or partial operating days) in the year.

Q3. The missing data substitution procedures in paragraph 95129(d)(2)(A) direct reporters to use the 90th and 95th percentile values of the data collected during the current reporting year and the previous two years. Should hours with 0 fuel use be included or ignored? Should invalid data be ignored? Should substituted data (after missing data substitution procedure is applied) from the past 2 years be used in the percentile?

Answer:

The historical data set should only include data that were directly measured when the unit was actually combusting fuel. Hours with 0 fuel use should be ignored in the historical data look-back. Hours with invalid data and substituted numbers (after a missing data substitution procedure was applied) should also be excluded.

Q4. What is the difference between "data capture rate" and "emission capture rate," and how do they affect a conformance determination?

Answer:

"Data capture rate" is defined in sections 95129(c), (d)(2), and (e) of the regulation. It is the number of valid data points divided by the total number of data points when the unit is in operation, evaluated based on each data element. Data capture rate determines which progressively-more-stringent data substitution method should be used.

The term "emissions capture rate" is not explicitly defined in the regulation, and it is not used for determining which data substitution method should be used. However, the concept of "emissions capture rate" is described in paragraph 95131(b)(13)(D), which requires the verifier to note at least a nonconformance if more than 5% of a facility's emissions are being calculated using missing data substitution procedures.

Data capture rates are evaluated by each data element. It is possible that more than one data element may be missing during the same timeframe. Each data element or each emission source with a missing data element represents some fraction of the total facility emissions. For these reasons, reporters and verifiers should not calculate the emissions capture rate by summing the data capture rates for the purpose of paragraph 95131(b)(13)(D). Instead, they must first calculate the amount of emissions that are substituted, then divide the total substituted emissions by the total facility emissions (including both the substituted emissions and the emissions directly measured/calculated from valid data) to get the emissions capture rate for the facility. See Example 8 for guidance on data capture rate and emissions capture rate calculations.

Q5. How does a verifier evaluate conformance with section 95129?

Answer:

Verification bodies review whether the 80% data capture rate has been met for all sources of missing data; whether all missing data represents more than 5% of the total emissions; and whether the reporting entity has a reasonable system to manage data substitution and documents that system in their GHG Monitoring Plan.

A non-conformance in any of these areas would trigger a qualified positive emissions data verification statement. However, if the data is substituted according to the regulation, the verifier accepts the data as accurate and a material misstatement evaluation would not consider that data to be misreported.

A non-conformance is automatically triggered if any data element has a data capture rate of less than 80% regardless of the amount of emissions that are affected by the missing data. By correctly following the missing data substitution procedures in the rule, the reporter has complied with the specific requirements to substitute missing data, and avoided further consequences associated with not having valid emission data for compliance obligation determination. However, it does not change the fact that the reporter was out of compliance with the applicable monitoring and recordkeeping requirements which led to a non-conformance.

The verification body should evaluate whether the reporting entity made every reasonable effort to obtain a data capture rate of 100%, as required in section 95129(c)-(d). Reasonable effort could include adherence to a written GHG Monitoring Plan, which describes steps the reporting entity takes to help ensure all data is captured.

The verification body should also evaluate whether the reporting entity has systems in place to prevent loss of data which could help inform the verification team on whether the reporting entity understands the regulation and whether other aspects of their emissions data report are likely reported accurately.

4. Examples

The following examples are provided as additional guidance for when and how to use the missing data substitution procedures of section 95129:

Example 1

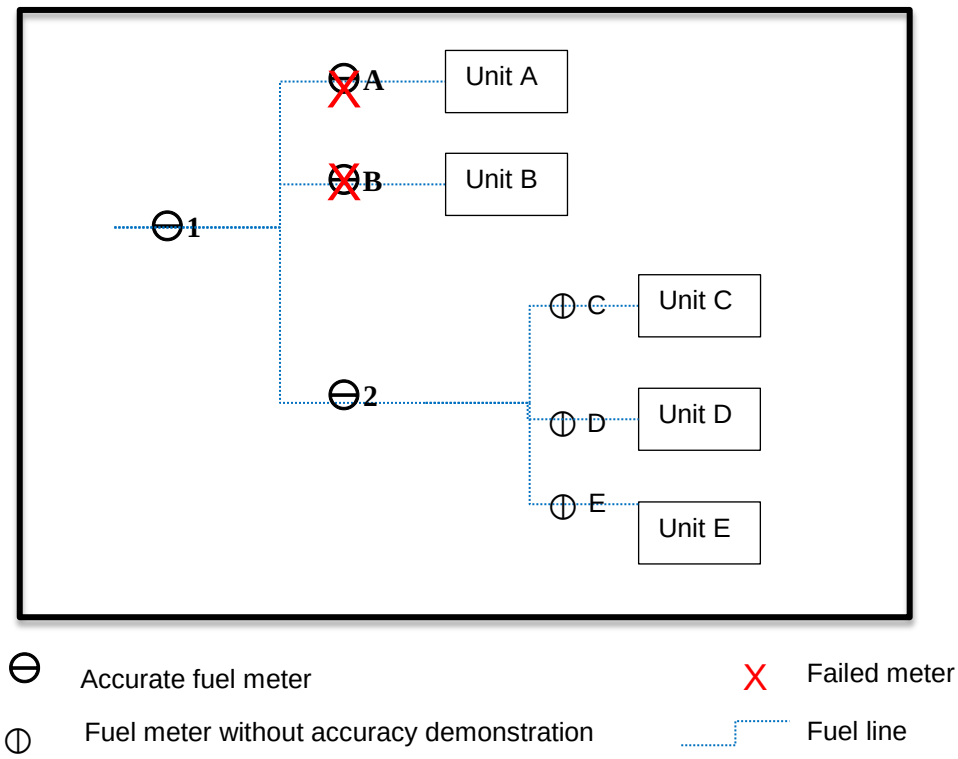

Are section 95129(d)(1)-(3) requirements triggered for this time period? **No.**

The total facility fuel consumption is completely and accurately known during this time period because Meter 1 is in proper operation. The operator may use engineering estimation methods to calculate the fuel consumption of Unit A and Unit B. Acceptable estimation methods may include (but are not limited to) calculating the difference between Meter 1 and Meter 2 measurements, and then proportionating the difference by the ratio of historical fuel use or production data of Unit A and Unit B. The operator must be able to demonstrate to the verifier that the estimation method is reasonable and based on good engineering principles, and the estimated fuel quantities at Unit A and Unit B and Meter 2 add up to the accurate total measured by Meter 1.

Example 2

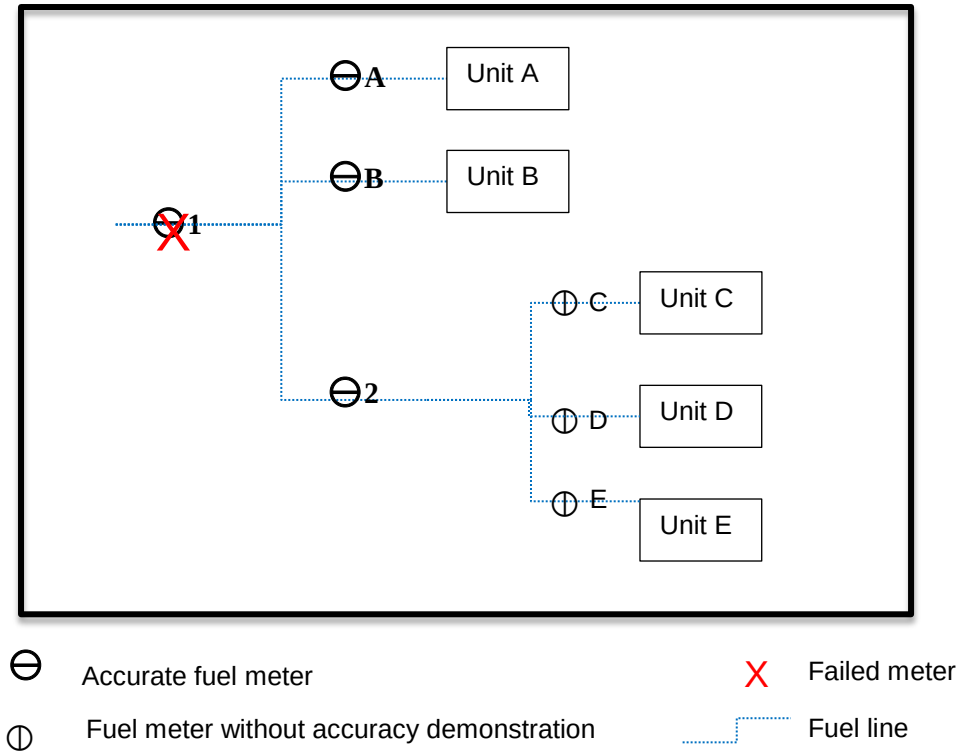

Are section 95129(d)(1)-(3) requirements triggered for this time period? **No.**

The total facility fuel consumption is completely and accurately known because Meter A, Meter B, and Meter 2 are functioning properly. The operator may use Meter A, Meter B, and Meter 2 to report fuel consumption quantities for the emission units.

Example 3

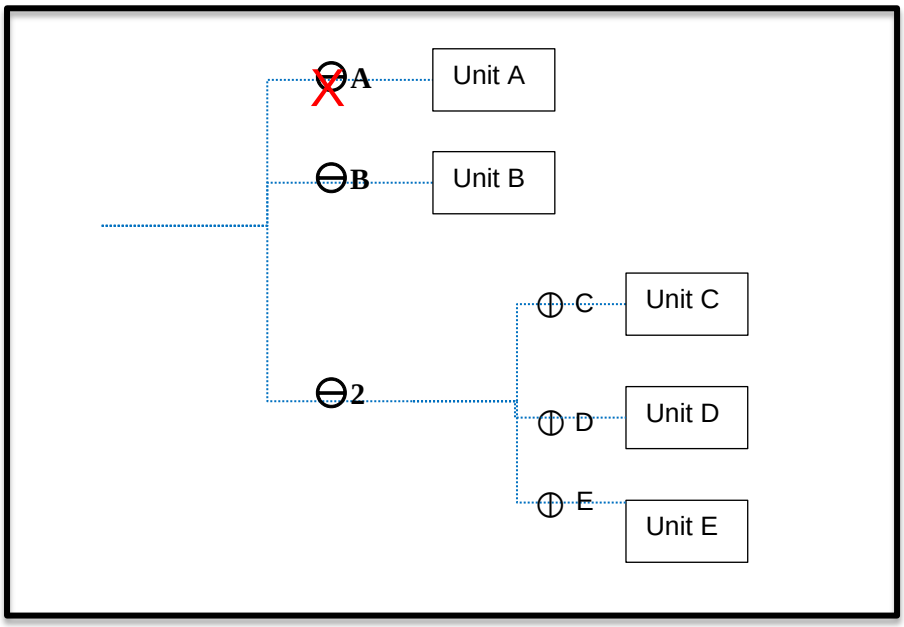

Accurate fuel meter

Fuel meter without accuracy demonstration

Failed meter

Fuel line

Are section 95129(d)(1)-(3) requirements triggered for this time period? **Yes.**

The total facility fuel consumption is not completely and accurately known during this time period. If the operator cannot repair or substitute the Meter A immediately, they can install a calibrated temporary meter at the Meter A location to bring the missing data period to an end. For any time period during which Meter A was not working properly and there was no temporary meter, the operator must use the applicable procedure in section 95129(d)(1)-(3) to substitute missing data.

Example 4

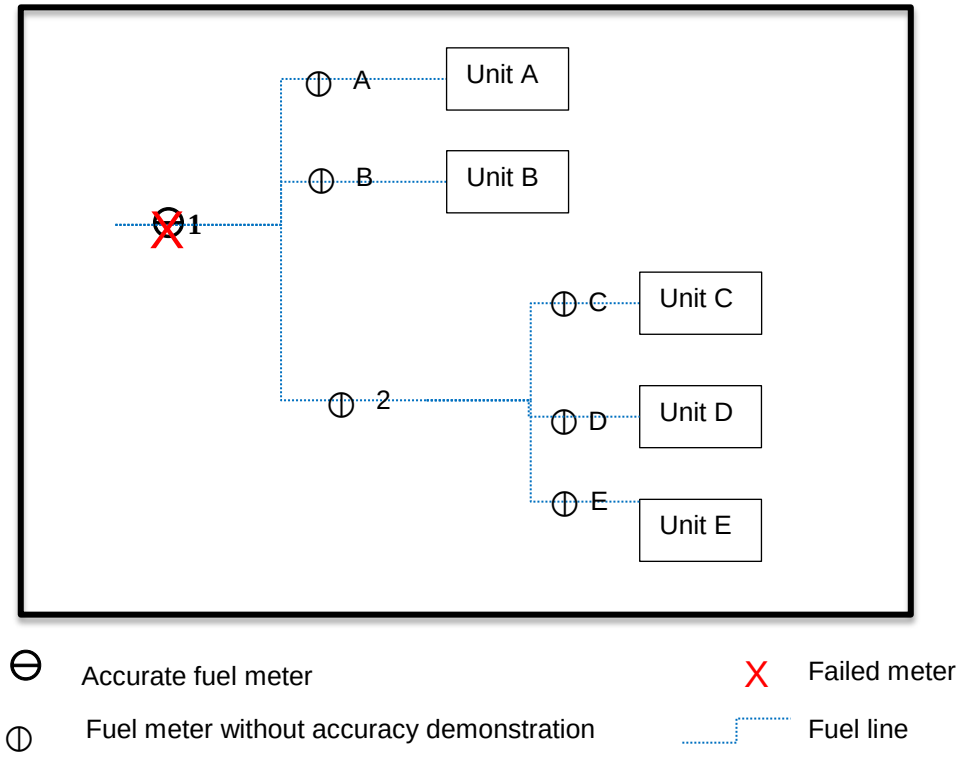

Are section 95129(d)(1)-(3) requirements triggered for this time period? **Yes.**

The total facility fuel consumption is not completely and accurately known during this time period because none of the downstream meters are accurate. The operator may end the missing data period by installing a temporary meter that meets the calibration and accuracy standard of the regulation at the Meter 1 location. The operator may also calibrate Meter A, Meter B, and Meter 2 so the situation depicted in Example 2 applies. Otherwise, the operator must use the applicable procedure in section 95129(d)(1)-(3) to substitute missing data at all five units, Units A-E. For any time period during which Meter 1 was not working properly and there was no temporary meter, or any time period before Meter A, Meter B, and Meter 2 are calibrated, the operator must use the applicable procedure in section 95129(d)(1)-(3) to substitute missing data.

Example 5

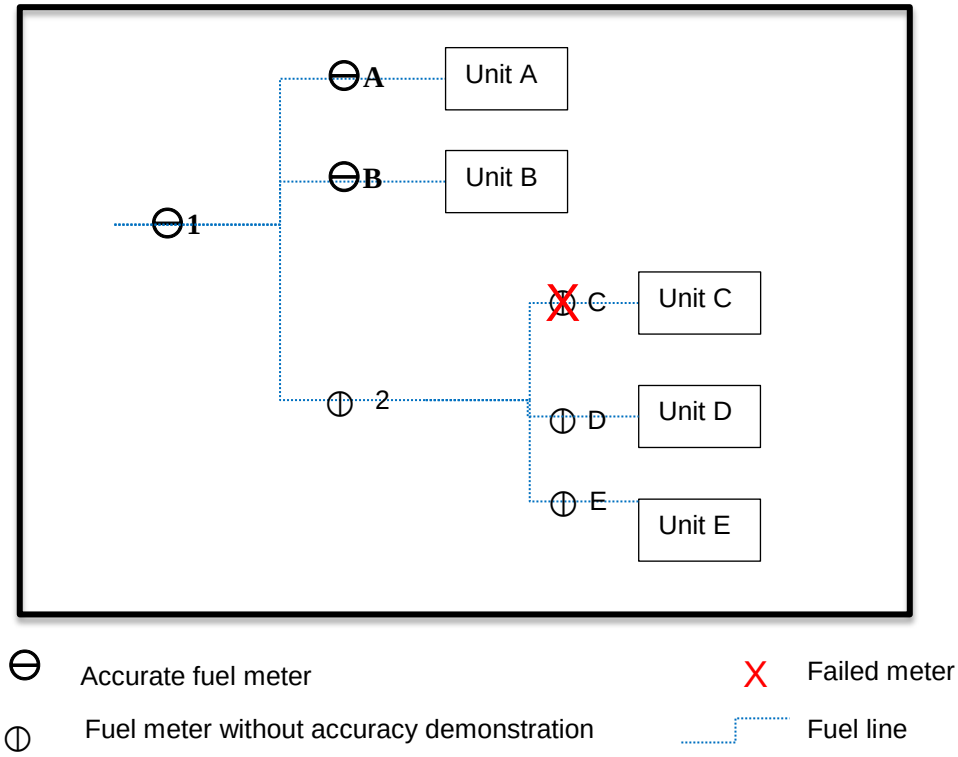

Are section 95129(d)(1)-(3) requirements triggered during this time period? **No.**

The total facility fuel consumption is completely and accurately known during this time period because Meter 1 is working properly. The operator may calculate the fuel consumption of Unit C using an unbiased estimation method which may be satisfied by one of the following two methods:

Fuel consumption of Unit C = Meter 1 – Meter A – Meter B – Meter D – Meter E

Fuel consumption of Unit C = Meter 2 – Meter D – Meter E

However, the calculated numbers at the unit-level must add up to the accurate total upstream. The operator must be able to demonstrate to the verifier that the estimation method is reasonable and based on good engineering principles.

Example 6

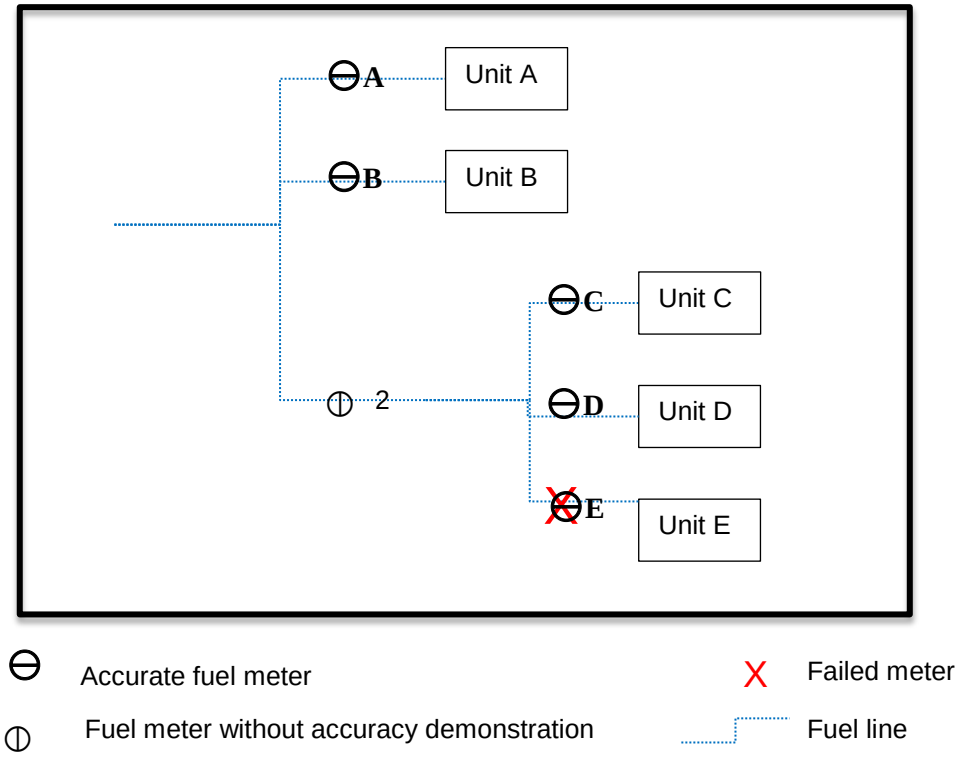

Are section 95129(d)(1)-(3) requirements triggered during this time period? **Yes.**

The total facility fuel consumption is not completely and accurately known during this time period. The operator may end the missing data period by installing a temporary meter that meets the calibration and accuracy standard of the regulation at the Meter E location. The operator may also calibrate Meter 2 so the fuel consumption of Unit E can be calculated by subtracting Meter C and Meter D measurements from the calibrated Meter 2 measurement. Otherwise, the operator must use the applicable procedure in section 95129(d)(1)-(3) to substitute missing data at Unit E. For any time period during which Meter E was not working properly and there was no temporary meter, and for any time period before Meter 2 was calibrated, the operator must use the applicable procedure in section 95129(d)(1)-(3) to substitute missing data.

Example 7

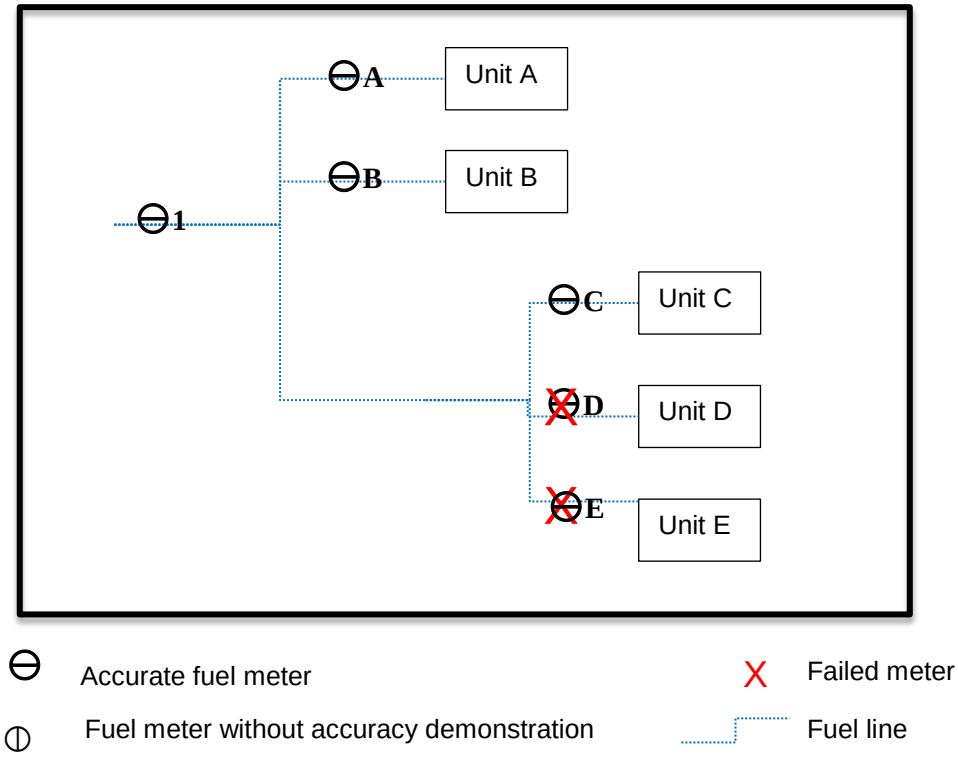

Are section 95129(d)(1)-(3) requirements triggered during this time period? **No.**

The total facility fuel consumption is completely and accurately known during this time period. The operator may calculate the sum of fuel consumptions of Unit D and Unit E as follows:

Unit D + Unit E = Meter 1 – Meter A – Meter B – Meter C

Next, the operator may use engineering estimation methods to calculate the fuel consumption of Unit D and Unit E during this time period because Meter 1 is working properly. Acceptable estimation methods may include (but are not limited to) calculating the difference between Meter D and Meter E measurements, and proportionating the difference by the ratio of historical fuel use or other production data at Unit A and Unit B. The operator must be able to demonstrate to the verifier that the estimation method is reasonable and the estimated fuel quantities at Unit D and Unit E add up to the accurate total measured by Meter 1.

Example 8

This missing data example illustrates multiple data elements that are missing with overlapping timeframes and how the data is substituted pursuant to section 95129.

Facility description:

A facility with a cogeneration system combusts field gas to produce electricity and steam from non-pipeline quality natural gas. Fuel data is provided by monthly invoices; carbon content and molecular weight are measured monthly by an off-site laboratory. It is determined that one month of fuel data, two months of carbon content data, and three months of molecular weight measurements are all invalid or missing. This missing data example is illustrated in Tables 2 and 3.

Step 1: Determine data capture rate (>90%; 80-90%; or <80%)

- The missing fuel data represents 1 of 12 months of data, representing 8% of the data. Substituting the data with the 90th percentile of the captured fuel data conforms with the regulation and the verifier may accept the substituted data as accurate.
- The missing carbon content data represents 2 of 12 months of data, representing 17% of the data. Substituting the data with the maximum value from the previous 3 years conforms with the regulation, and the verifier may accept the substituted data as accurate.
- The missing molecular weight data is problematic because less than 80% of the data is captured, which is an automatic non-conformance with the single data element constraint in the first portion of the first sentence in 95131(b)(13)(D). The data is substituted with the maximum value from all previous years.

Step 2: Identify data substitution method for each type of missing data (Fuel, CC, MW)

The method of data substitution is shown in Table 2. The previous year's data is not shown in this example, even though in the case of carbon content, that data is the basis for calculating the substituted data, and would need to be reviewed by the verification body.

Step 3: Substituted missing data

The substituted data (A, B, and C) is added to the captured data in Table 2.

Step 4: Calculate emissions

Emissions are calculated using both the captured and substituted data. If the substituted data is substituted correctly, the substituted data is assumed to be accurate by the verification body.

Step 5: Identify non-conformances (either <80% data capture, or >5% of emissions)

Because the data capture rate for monthly molecular weight measurements is <80%, a non-conformance is triggered.

Because the emissions associated with the substituted data represent >5% of the total facility emissions, a non-conformance is also triggered. If other emissions sources were present at the facility, the verifier would compare the emissions associated with the missing data with the entire facility's emissions to determine if the missing data represent greater than 5% of the total facility emissions.

Table 2 - Missing Data for Total Emissions Constraint

	Data from Reporting Year			Data from Previous Years				
	Fuel Quantity	Fuel Characteristics		Fuel Quantity		Fuel Characteristics		
Month	**[Fuel]** = Mass or volume of the fuel combusted, for the month (express mass in short tons for solid fuel, volume in standard cubic feet for gaseous fuel, and volume in gallons for liquid fuel).	**[CC]** = Measured carbon content of the fuel for the month (percent by weight, as a decimal fraction).	**[MW]** = Measured molecular weight of the gaseous fuel (kg/kg-mole).	**Fuel (scf) (Reporting year - 1)**	**Fuel (scf) (Reporting year - 2)**	**CC (Reporting year - 1)**	**CC (Reporting year - 2)**	**Highest MW from each month for all years**
January	52,060,504	0.36497	36.01	53,576,532	51,487,600	0.36001	0.34601	36.12
February	47,875,436	0.36011	36.02	49,984,322	49,434,232	0.38650	0.35032	36.02
March	49,506,054	0.39900	35.08	49,799,321	49,976,002	0.35706	0.35931	36.01
April	50,294,023	0.36467	C	51,900,003	54,909,432	0.35512	0.37537	36.10
May	A	B		52,005,901	54,065,001	0.35212	0.40001	35.99
June	50,176,567			50,005,432	54,932,100	0.39911	0.3578	35.90
July	51,125,654	0.33237	36.01	50,400,921	49,928,714	0.36253	0.34587	36.02
August	54,687,800	0.36097	36.01	53,043,981	54,000,004	0.36251	0.38524	36.20
September	58,723,412	0.39570	36.13	57,032,871	59,021,590	0.34870	0.35289	36.28
October	57,923,235	0.36467	36.02	56,987,100	57,012,474	0.36041	0.39221	36.05
November	51,655,443	0.37876	36.31	50,443,254	52,009,201	0.40002	0.36212	36.31
December	52,006,553	0.37824	33.45	55,087,353	53,912,350	0.39951	0.40001	36.32
Total	576,034,681							
Data capture rate:	11 of 12 **(92%)** >90%	10 of 12 **(83%)** 80-90%	9 of 12 **(75%)** <80%					

90th percentile of fuel usage (current and previous 2 years)	57,024,712

Method of Substituting Missing Data

A: Greater than 90% data capture rate requires 90th percentile of monthly fuel usage from previous 3 years per section 95129(d)(2)(A). Value = 57,024,712
B: Between 80% and 90% data capture rate requires highest monthly carbon content value from the current year and the previous 2 years per section 95129(c). Value = 0.40002
C: Less than 80% data capture rate requires the highest monthly molecular weight from all years per section 95129(c). Value = 36.32

Substituted Data	
A:	**57,024,712**
B:	**0.40002**
C:	**36.32**

Table 3 - Missing Data for Total Emissions Constraint

	Fuel Quantity	Fuel Characteristics			
Month	**[Fuel]** = Mass or volume of the fuel combusted, for the month (express mass in short tons for solid fuel, volume in standard cubic feet for gaseous fuel, and volume in gallons for liquid fuel).	**[CC]** = Measured carbon content of the fuel for the month (percent by weight, as a decimal fraction).	**[MW]** = Measured molecular weight of the gaseous fuel (kg/kg-mole).	Emissions (MT)	% of total Emissions
January	52,060,504	0.36497	36.01	2,953.14	8.0%
February	47,875,436	0.36011	36.02	2,680.40	7.3%
March	49,506,054	0.39900	35.08	2,990.88	8.1%
April	50,294,023	0.36467	**36.32**	2,875.21	7.8%
May	**57,024,712**	**0.40002**	**36.32**	3,576.01	9.8%
June	50,176,567	**0.40002**	**36.32**	3,146.56	8.6%
July	51,125,654	0.33237	36.01	2,641.07	7.2%
August	54,687,800	0.36097	36.01	3,068.18	8.3%
September	58,723,412	0.39570	36.13	3,624.11	9.9%
October	57,923,235	0.36467	36.02	3,284.28	8.9%
November	51,655,443	0.37876	36.31	3,066.21	8.3%
December	52,006,553	0.37824	33.45	2,840.33	7.7%
Total	633,059,393			36,749.15	
Data capture rate:	11 of 12 **(92%)** >90%	10 of 12 **(83%)** 80-90%	9 of 12 **(75%)** <80%		
[CC annual] = Weighted annual carbon content of the fuel (percent by weight, expressed as a decimal fraction, e.g., 95% = 0.95). (for 2011)				0.375257	
[MW annual] = Weighted annual molecular weight of the gaseous fuel (kg/kg-mole). (for 2011)				35.842359	

>5% of emissions are missing

Non-Conformance