STATE OF CALIFORNIA

California Environmental Protection Agency

AIR RESOURCES BOARD

Verification of Greenhouse Gas Emissions Data Reports:

Technical Guidance for Verifiers

Planning and Technical Support Division
Emission Inventory Branch

May 2011

This page intentionally left blank

Verification of Greenhouse Gas Emissions Data Reports:

Technical Guidance for Verifiers

May 2011

Table of Contents

Appendix A iii

Resources iii

CHAPTER 1: Introduction 5

1.1 Overview and Purpose 5

1.2 Crosswalk between the Regulation and the Verification Technical Guidance Document 7
1.3 Verification Cycle 8
1.3.1 Annual Verification 8
1.3.2 Triennial Verification 9
1.4 Verification Activities 11
1.5 Verification Standard 12
1.5.1 Minimum Quality Standards 12
1.5.1.1 Uncertainty 12
1.5.1.2 Professional Judgment 13

CHAPTER 2: Preparing for Verification 14

2.1 Guidance: Preparing for Verification – Operators 14
2.1.1 Summary Steps for the Operator to Prepare for Verification 14
2.1.2 Select a Verifier 14
2.1.3 Contracts with the Verification Body 15
2.1.3.1 Contract Terms and Conditions – Items to Consider 18
2.1.4 Issues for Operators to Consider 19
2.2 Guidance: Preparing for Verification - Verification Bodies 19
2.2.1 Issues for Verification Bodies to Consider 20
2.2.2 Verification Team Roles 20
2.2.3 Subcontracting 23
2.2.4 Self Evaluation for Conflict of Interest and Notification of Verification Services (COI/NOVS) 23
2.2.5 COI/NOVS Evaluation Approval Process 25
2.2.6 Percentage of Fee 26
2.2.7 Rotation of Verification Bodies 27
2.2.8 Examples of COI situations 27
2.3 Verification Timeline 31

CHAPTER 3: Core Verification Activities 34

3.1 Planning – Initial Review of Systems and Processes 34
3.2 Verification Plan 34
3.3 Site Visits 35
3.3.1 Site Visit Planning 36
3.3.2 Source Inventory Review 37
3.3.3 Data Management System Review 38
3.3.4 Review of Other Relevant Information 41
3.4 Sampling Plan 43
3.5 Data Checks 45
3.6 Assessing Material Misstatement 48
3.7 Conformance with the Regulation 52
3.8 Less Intensive (or, Interim) Verification 53
3.9 Emissions Data Report Modification 54
3.10 Report Drafting – Detailed Verification Report 54

CHAPTER 4: Monitoring and Measurement Issues 57

4.1 Missing Data 57
4.1.1 Fuel Analytical Data Capture Rate 57
4.1.2 Missing Data Substitution 57
4.2 De Minimis Sources 59
4.3 Measurement Accuracy 59
4.3.1 Preparing for Review of Fuel Analytical Data Capture Instrumentation 61
4.3.2 Orifice Flow Meters 61
4.3.3 Solid Fuels 62
4.4 Continuous Emissions Monitoring Systems 63

CHAPTER 5: Completing the Verification Process 66

5.1 Finalization 66
5.2 Independent Technical Review 66
5.3 Verification Opinion 67
5.4 Petition Process 68
5.5 Completion and Issuance of Opinion 69

CHAPTER 6: Air Resources Board Oversight 70

6.1 Conflict of Interest 70
6.2 Audits 70
6.3 Issues 70

Table of Tables and Figures

Table 1-1 California GHG Mandatory Reporting and Verification Schedule 10
Table 1-2 Summary of Verification Regulatory Activities 11
Figure 2-A Verification Process Overview 16
Table 2-1 Conflict of Interest Determinations – Regulatory Requirements 24
Figure 2-B Verification Process Timeline 33
Table 3-1 Items to Consider about Data Management Systems 40
Table 3-2 Examples of Supporting Documents Relevant to Verification 42
Figure 3-A Conceptual GHG Emissions Data Chain 46
Table 3-3 Example Summary of Data Checks 56
Table 5-1 Verification Opinions 68

Appendix A

Table A-4.1 Suggested Document Reviews for Refinery Sector ……A-8
Figure A-5.1 Examples of Reporting Situations (1) ……...A-20
Figure A-5.2 Examples of Reporting Situations (2) ……...A-21
Figure A-5.3 Examples of Reporting Situations (3) ……...A-22
Figure A-5.4 Examples of Reporting Situations (4) ……...A-23
Figure A-5.5 Examples of Reporting Situations (5) ……...A-24
Figure A-5.6 Examples of Reporting Situations (6) ……...A-25
Table A-5.2 Flow diagram …..……..……..A-27
Table A-5.3 Annual Transactions …..……..……A-28
Table A-5.4 Aggregation Example, Continued ……...……A-29
Table A-5.5 Aggregation Completed……..A-30

Resources

Text of Regulation:
http://www.arb.ca.gov/regact/2007/ghg2007/froghg.pdf

Verification Webpage, including FAQs:
http://www.arb.ca.gov/cc/reporting/ghg-ver/ghg-ver.htm

Instructional Guidance for Reporting Regulation
http://www.arb.ca.gov/cc/reporting/ghg-rep/ghg-rep-guid/ghg-rep-guid.htm

Step-by-step Guidance for Using ARB's Reporting Tool
http://www.arb.ca.gov/cc/reporting/ghg-rep/ghg-tool.htm#sectorguidance

Operators and verifiers will be notified of any changes/updates to these references via email. For questions regarding verification, please email ghgverify@arb.ca.gov.

This page intentionally left blank

CHAPTER 1: Introduction

1.1 Overview and Purpose

This technical guidance is intended for both facility operators and accredited verifiers to provide administrative detail and recommended practices for compliance with the verification provisions of the California Air Resources Board's (ARB) Regulation for the Mandatory Reporting of Greenhouse Gas (GHG) Emissions (Regulation) (Title 17, California Code of Regulations, §95100-95133). ***This Guidance is only applicable to verifications of 2010 emissions data conducted in 2011***. Unlike the Regulation, this technical guidance does not have the force of law, does not establish new mandatory requirements for verification, and in no way supplants, replaces or amends any of the legal requirements of the Regulation. Conversely, any omission or truncation of regulatory requirements in this technical guidance does not relieve operators and verifiers of their legal obligation to fully comply with all requirements of the Regulation.

The technical guidance is intended to facilitate compliance with the Regulation by providing operators and verifiers explanations about the regulatory requirements, practical advice regarding steps that should be taken to ensure compliance with those requirements, and examples that illustrate how the requirements would apply in particular circumstances. Specifically, Chapter 1 provides an overview of the Regulation and its requirements. Chapter 2 provides technical guidance, in a regulatory context, regarding preparing for verification. Chapter 3 provides specific verification activities and recommendations on meeting regulatory requirements. Chapter 4 provides technical guidance on monitoring and measurement issues, and Chapter 5 explains regulatory provisions related to the completion of the verification process and examples of positive and adverse verification opinions. Chapter 6 sets forth ARB's oversight of the verification process. Appendix A sets forth supplemental verification guidance for specific sectors.

This material is provided to help operators and verifiers successfully comply with GHG reporting and verification requirements. The technical guidance also includes suggested best practices and other recommendations in certain areas to assist operators and verifiers and help assure the best possible emissions information. Best practices in this technical guidance that are not taken directly from the Regulation are not mandatory.

The Regulation was developed pursuant to California's Global Warming Solutions Act of 2006 and can be accessed at http://www.arb.ca.gov/regact/2007/ghg2007/ghg2007.htm. Instructional guidance on GHG reporting to facility operators is available at http://www.arb.ca.gov/cc/reporting/ghg-rep/ghg-rep-guid/ghg-rep-guid.htm.

A successful GHG emissions reduction program requires a system to calculate, report, and verify GHG emissions. The Regulation requires GHG emissions reporting from major industrial and commercial stationary sources in California. A key element of a credible GHG emissions data-reporting program is an independent and impartial verification of the reported emissions to ensure their completeness, accuracy, and conformance with the Mandatory Reporting Regulation. The Regulation outlines the minimum services which verification must provide. These requirements are consistent with international standards. Under the Regulation, verification services must be performed by qualified, trained and accredited third-party verifiers who meet specifications for education and experience, and demonstrate that there is no potential or actual conflict of interest (COI) between themselves and the facility operator.

Operators of facilities required to report their GHG emissions annually include electricity generating facilities, electricity retail providers and power marketers, oil refineries, hydrogen plants, cement plants, cogeneration facilities, and general stationary combustion (GSC) sources that emit over 25,000 metric tonnes (MT) per year of CO_2 from stationary source combustion. The latter category includes diverse facilities such as food processing, glass container manufacturing, oil and gas production, and mineral processing facilities. Electricity generating facilities, retail providers, and marketers of electricity are required to report their transactions data as well as specific fugitive emissions using the methods specified in the Regulation.

The Regulation provides detailed reporting specifications for each regulated industrial sector, defining which facility processes and GHG emissions must be reported. In general, all facilities must report their on-site stationary combustion emissions of carbon dioxide (CO_2), nitrous oxide (N_2O), and methane (CH_4). Cement plants, oil refineries, hydrogen plants, and electricity generators also report process emissions when specified, which occur from chemical or other non-combustion activities. Facilities report fugitive emissions when specified in the Regulation. The CO_2 emissions from biomass-derived fuels are reported separately.

Electricity retailers and marketers are required to report wholesale electricity transactions, including purchases, sales, imports, exports, and exchanges. Emissions data reports in the electric power sector include two additional Kyoto gases, sulfur hexafluoride (SF_6) and hydro-fluorocarbons (HFCs).

ARB provides a comprehensive on-line GHG emissions data Reporting Tool for the reporting, verification, and review of emissions data reports for all stakeholders (operators, verifiers, and the public). Facility operators set up accounts in the system where they can assign staff, consultants, and verifiers who will have varying levels of access to enter, modify, or view the facility data. A Reporting Tool User's Guide provides more information on who has access to which features within the tool. http://www.arb.ca.gov/cc/reporting/ghg-rep/ghg-tool.htm

1.2 Crosswalk between the Regulation and the Verification Technical Guidance Document

CHAPTER 1: Introduction	
Verification Cycle	§95103(c)(1-3); §95130(a-b)
Uncertainty	§95102(a)(195)
Professional Judgment	§95102(a)(161)
Conflict of Interest	§95133
CHAPTER 2: Preparing for Verification	Verification Guidance
Verification Team Roles	§95102(a)(204), §95102(a)(205) §95102(a)(200), §95102(a)(106), §95131 (a)(2), §95131(c)(1)(C),
Subcontracting	§95132(e)
Self Evaluation for Conflict of Interest & Notification of Verification Services (COI/NOVS)	§95133
Percentage of Fee	§95131(e)
Rotation of Verification Bodies	§95133(d)(1)(A)(2)
CHAPTER 3: Core Verification Activities	
Planning – Initial Review of Systems and Processes	§95131(a), §95131(b)(1-3)
Verification Plan	§95131(b)(1-3)
Site Visits	§95131(b)(3-7)
Sampling Plan and Data Checks	§95131(b)(8-9)
Assessing Material Misstatement	§95102(a)(113), §95131(b)(11), §95131(c)(2)(B)
Conformance with the Regulation	§95102(a)(135), §95131(b)(11), §95131(c)(2)(B)
Less Intensive (or, Interim) Verification	§95102(a)(107), §95130(a-b), §95131(b)(9)
Emissions Data Report Modification	§95131(b)(10), §95131(c)(3), §95131(d)
Report Drafting – Detailed Verification Report	§95131(c)(2)(A)
CHAPTER 4: Monitoring and Measurement Issues	§95103
Missing Data	§95103(a)(8)
Missing Data Substitution	§95103(a)(8)
De Minimis Sources	§95103(a)(6)
Fuel Measurement Accuracy	§95103(a)(9)
Preparing for Review of Fuel Analytical Data Capture Instrumentation	§95131(b)(8)(c)
Continuous Emissions Monitoring Systems	§95131(b)(8)(c)
CHAPTER 5: Completing the Verification Process	§95131(c)
Independent Technical Review	§95131(c)
Verification Opinion	§95102(a)(2), §95102(a)(151), §95102(a)(202), §95131(c-e)
Dispute Resolution	§95131(c)(3)
CHAPTER 6: Air Resources Board Oversight	§95130, §95133(e)
Appendix A: Sectors	
Electricity Generation and Cogeneration	§95111, §95112
Cement	§95110
Refinery	§95113
Electricity Transactions	§95111(b)
Appendix B: ARB Oversight	
ARB Verifier Accreditation	§95132

1.3 Verification Cycle

The Regulation includes two separate annual reporting deadlines, each followed by a six-month verification period. Electric generating facilities and cogeneration facilities that are *not* part of other reporting entities, along with GSC facilities outside the oil and gas sector, must submit emissions data reports each year by April 1, for emissions occurring in the previous calendar year. All remaining reports are due by June 1. Verification opinions are due October 1, for operators subject to the April reporting deadline, and December 1 for all others. The frequency of required third-party verification services is specified in §95103(c) of the Regulation.

Table 1-1 contains both annual reporting and annual and triennial verification schedules. In cases where a facility reports both a primary and secondary sector, the facility is subject to the verification requirements of the most frequent sector. For example, a cement plant or general stationary combustion facility that has operational control over a cogeneration plant burning primarily fossil fuels with capacity to generate 10 MW or more of electrical power is required to have annual verification of its emissions data reports, because annual verification is required for cogeneration facilities of this size.

1.3.1 Annual Verification

Where required, an operator needs to have its emissions data report verified annually. However, the operator is allowed, subject to verifier concurrence, to have a less intensive verification in the second and third years after a positive full verification. For example, in the first year, all of the verification requirements are required. This includes a site visit, verification plan, sampling plan, review of the data management system, and data checks, etc. In the second and third years, the verification effort may be a streamlined process to include emissions data checks based on the sampling plan that resulted in a positive verification opinion, developed in the first year. This cycle then repeats beginning with the next full verification. Section 95130 of the Regulation contains the following requirements for operators subject to annual verification:

- A full verification must be carried out at least:
  - Every third year;
  - The first year after a facility operator receives an adverse verification opinion;
  - Each time the facility operator changes verification bodies.
- The facility operator must change verification bodies after six consecutive years to avoid complacency and potential conflicts of interest.
- The operator may elect to use this verification body again, after a break of at least three years.

1.3.2 Triennial Verification

When an operator is required to have its emissions data report verified triennially, full verification is required every three years. Operators may choose to obtain less intensive verification services for the two years following a required year of full verification services. For example, in the first year, all of the verification requirements of a site visit, verification plan, sampling plan, review of the data management system, and data checks are required. In the second and third years, verification of the entity's emissions data report is optional. This cycle then repeats.

A facility operator that is subject to triennial verifications may elect to do annual verification, but a verification opinion is not required to be submitted for the interim years, even if the verifier has completed the verification.

Table 1-1 California GHG Mandatory Reporting and Verification Schedule

REPORTING SCHEDULE	VERIFICATION SCHEDULE	
April 1, every calendar year	**October 1, every calendar year**	
• **General Stationary Combustion Facilities (GSC**), excluding oil and gas facilities with a NAICS code of 211111	**TRIENNIAL VERIFICATION**	• ***Exception:*** **GSC with Electric Generating or Cogeneration Facilities with nameplate generating capacity ≥10 MW and burning fossil fuels (>3% of total fuel) must verify annually**
• **Electric Generating Facilities,** and • **Cogeneration Facilities** When not under the operational control of a retail provider, cement plant operator, refinery operator, hydrogen plant operator, or oil and gas facility with a NAICS code of 211111	**ANNUAL VERIFICATION**	• **Combust fossil fuels (> 3%), and** • **Nameplate generating capacity ≥10 MW**
	TRIENNIAL VERIFICATION	• **Nameplate generating capacity <10 MW, or** • **Geothermal generating facilities, or** • **Combusting pure biomass or biogas (at least 97%)**
June 1, every calendar year	**December 1, every calendar year**	
• **Retail Providers** • **Marketers** • **Petroleum Refineries** • **Hydrogen Plants** • **GSC, in the oil and gas sector with NAICS of 211111**	**ANNUAL VERIFICATION**	• **When these operators have electricity generation or cogeneration facilities under their control, the electricity and cogeneration operations are also verified annually**
• **Electric Generating Facilities,** and • **Cogeneration Facilities** When under the operational control of another facility subject to GHG reporting	**ANNUAL VERIFICATION**	• **When under the operational control of a retail provider, refinery operator, hydrogen plant operator, or oil and gas facility with a NAICS code of 211111**
	TRIENNIAL VERIFICATION	• **When under the operational control of a cement plant, with nameplate generating capacity <10 MW or combusting pure biomass or biogas (at least 97%)**
• **Cement Plants**	**TRIENNIAL VERIFICATION**	• ***Exceptions:*** **Changes in materials or operations that require a change in air district permit require verification of report for following calendar year.** • **Annual verification if the facility is in operational control of on-site electric generating or cogeneration facilities with nameplate generating capacity ≥10 MW and burning fossil fuels (>3% of total fuel)**

*If any change in materials or operations occurs at a cement plant that requires a change in permit filed with an air pollution control district or air quality management district, the reporting entity will obtain verification of the emissions data report that covers the first full calendar year following the permit change, in addition to the regular triennial schedule. Provisions for new facilities and cessation of reporting after reduced emissions are located in §95103 (d) and (e) of Mandatory Reporting Regulation.

Table 1-2 Summary of Verification Regulatory Activities

1. An ARB accredited verification body is selected by an operator;

2. Verification body performs a COI assessment and submits a notice of verification services (NOVS form) to ARB;

3. Upon approval of the verification body-operator arrangement, the verification team develops a verification plan;

4. Verification team conducts core verification activities;
   - Develop Verification Plan
   - Develop Sampling Plan
   - Conduct and document risk assessment
   - Conduct Site Visit
   - Evaluate and understand data Management Systems
   - Ensure all emission sources identified and reported
   - Perform interviews of appropriate facility staff
   - Perform Data Checks
   - Determine if the Emissions Data Report is free of material misstatement, and is in conformance with all regulatory requirements

5. Verification body prepares a draft verification report and a verification opinion. The lead verifier on the verification team affirms that the verification team has carried out all the verification services as required. A lead verifier from within the verification body who was not part of the verification services for the operator conducts an independent review and determines whether they concur with the verification team findings and that the regulatory requirements of verification have been complied with;

6. Verification body submits the final verification report and opinion to the operator, and the verification opinion to ARB.

1.4 Verification Activities

Table 1-2 is a brief outline of the kinds of activities that must be included in verification. However, the Regulation requires that a verifier use their professional judgment in key areas. For example, the Regulation does not state how many data checks a verifier must conduct, but does require that a verifier use their professional judgment to determine how many areas of data to check to assure themselves that there is reasonable assurance no material misstatement exists.

1.5 Verification Standard

All verifiers assess an emissions data report against the regulatory requirements of the GHG reporting program. The standard is the ARB Regulation for the Mandatory Reporting of Greenhouse Gas Emissions. The Regulation can be accessed at http://www.arb.ca.gov/regact/2007/ghg2007/frofinoal.pdf.

1.5.1 Minimum Quality Standards

Emissions data reports submitted to ARB must be free from material misstatement, avoid bias in the selection and presentation of information, and provide a credible and balanced account of the reporting entity's emissions data. The verification body must be able to state with reasonable assurance, as defined in §95102(a), that the reported emissions are within +/- 5% of the true CO_2e emissions for the facility, for all sources for which reporting is required. The verification body also confirms that all applicable regulatory methodologies and requirements have been met in the calculation and reporting of the emissions data.

It is possible that during the verification process, differences will arise between the emissions totals determined by the operator and those calculated by the verifier during data checks. Differences of this nature may be classified as either material (significant) or immaterial (insignificant).

A discrepancy that leads the verification body to believe the reported total facility emissions contain an error greater than 5% of "true" facility level CO_2e emissions is considered a material error and the emissions data report contains a material misstatement. If an emissions data report meets the "free of material misstatement" requirements of the Regulation, then it means errors found during verification would not cause a greater than 5% error in total CO_2e or electricity transactions reported by the facility and the emissions data report contains no material misstatement.

1.5.1.1 Uncertainty

The verification body may find errors that may or may not lead to material misstatements in the emissions data report. Besides the risk of using the incorrect emission factors or calculation methods, there is an inherent or "design" uncertainty associated with the accuracy of monitoring equipment, emission factors, laboratory test methods, and some calculation methodologies which may cause the emissions data to deviate from the "true" facility level emissions. ARB recognizes this inherent uncertainty, and the Regulation does not require verifiers to include these inherent uncertainties when evaluating for material misstatement, provided that all monitoring equipment and calculation methodologies conform to the requirements of the Regulation. If a meter meets the defined inherent uncertainty requirement, the meter readings are assumed to be true and accurate. Conversely, if there is a specific accuracy requirement in the regulation, such as for fuel use measurements, and the measurements do

not conform to required accuracy standard, then the uncertainty will need to be included in the evaluation of potential material misstatement. See Chapters 3 and 4 for further explanation.

1.5.1.2 Professional Judgment

The Regulation requires verifiers to use their professional judgment when performing verification activities.

Professional judgment is the ability to render sound decisions based on professional qualifications and relevant greenhouse gas accounting experience. §95102(a)(161).

Application of a verifier's professional judgment is required in the following areas:

- collection and review of information needed to conduct the verification activities;
- the number of data checks required for the team to conclude with reasonable assurance whether the reported emissions and transactions are free of material misstatement and the emissions data report otherwise conforms to the requirements of the Regulation.

CHAPTER 2: Preparing for Verification

The mandatory reporting Regulation specifies practices for the quantification, reporting and verification of GHG emissions. Prior to performing any verification activities, a number of procedural steps must occur to ensure that the obligations and responsibilities of the verification body and the operator are clear. Chapter 2 provides an overview of these steps for the verification body and the operator. Chapter 2 also includes additional information for the verification team as they prepare to provide verification services. Figure 2-A provides an overview of the verification process, and Figure 2-B depicts the deadlines for GHG reporting and verification.

2.1 Guidance: Preparing for Verification – Operators

Verification schedules are listed in Chapter 1, Table 1-1. Although all operators subject to mandatory reporting will report to ARB every year, the triennial verification schedule in §95131(a) requires full verification only once every three years. The annual verification schedule in §95131(b) requires full verification the first year, and every third year thereafter with an option to have either full verification or less intensive verifications performed in the interim years.

2.1.1 Summary Steps for the Operator to Prepare for Verification

Identify approved verification bodies from ARB's verification webpage:

- Negotiate a contract with a verification body;
- Assemble your complete GHG inventory and associated documents necessary for the verification body to verify your GHG emissions data report.

2.1.2 Select a Verifier

To initiate the verification process, the operator may review the list of ARB-accredited verification bodies available in the Reporting Tool and on ARB's website: http://www.arb.ca.gov/cc/reporting/ghg-ver/ghg-ver.htm.

ARB staff recommends that facility operators review the entire list of ARB-accredited verification bodies, paying careful attention to each company's expertise, experience and resources to successfully complete the verification for facility operator, including any sector specialty accreditations that may be required. After reviewing the list of potential verification bodies, it is recommended that the operator provide as much information about the facility's emissions data report and the data management system as possible to the verification bodies that bid on the verification. This will assist each verification body in understanding and managing their business risk, as well as their costs associated with providing verification services for the operator.

2.1.3 Contracts with the Verification Body

It can be difficult for verifiers to accurately estimate the total number of hours required to complete a verification before the commencement of verification services. This is because the verifier generally will not know in advance what issues may arise during the verification, how organized and readily available facility data and records are, how transparent data systems and documentation are, as well as the possibility of other unforeseen circumstances. When contracting with an operator, the verification body should consider contingency clauses where the total cost of the verification can be increased if significant issues arise that require them to expand the scope of verification, or the operator is not forthcoming with needed information. Verification bodies have a regulatory obligation to conduct a thorough verification in accordance with all regulatory requirements, and need to carefully consider their ability to fulfill their regulatory obligations when contracting.

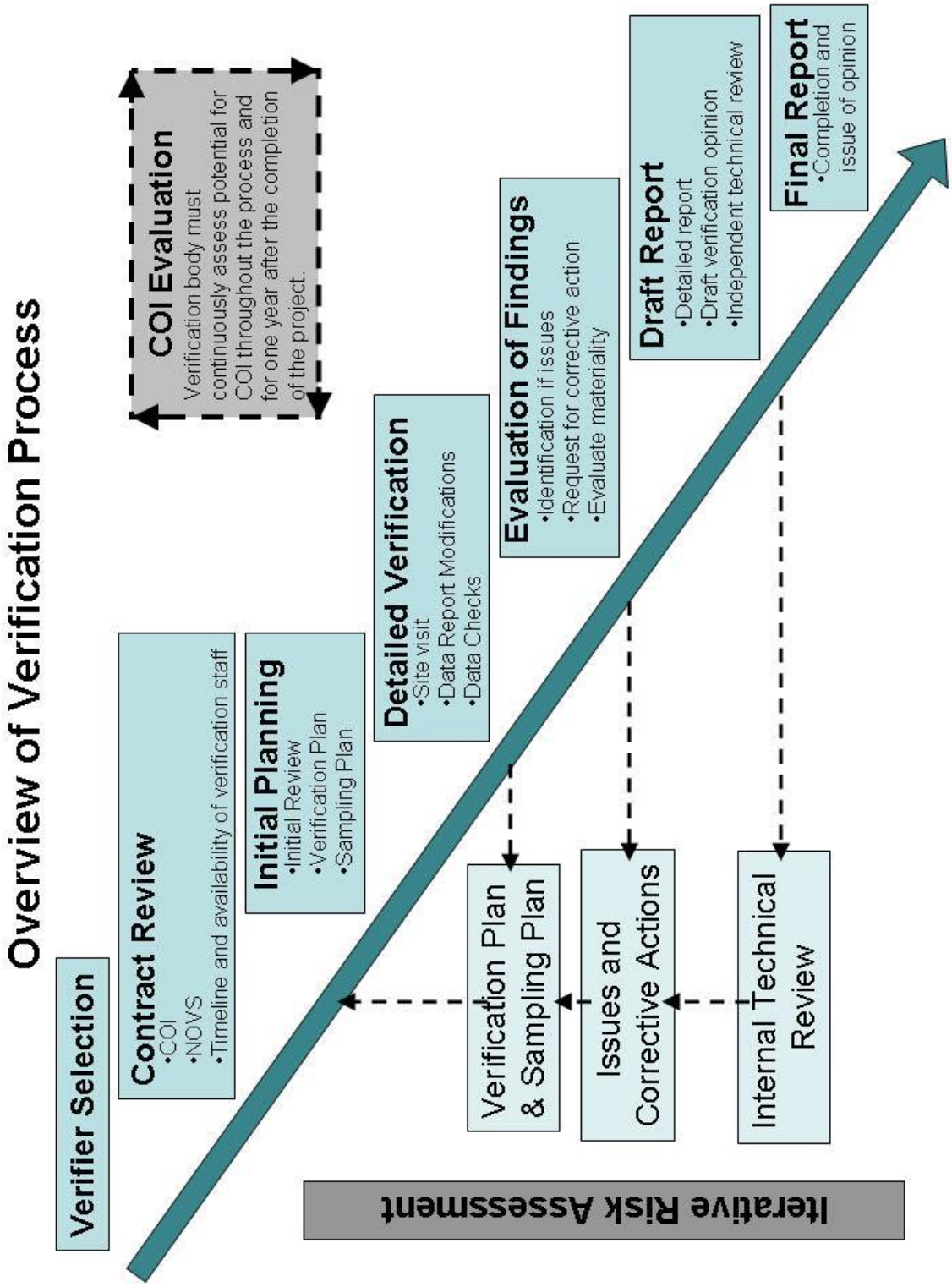

Figure 2-A Verification Process Overview

If the operator chooses to undergo a competitive bidding process, they will solicit bids from several ARB accredited verification bodies. ARB suggests the operator consider signing a non-disclosure agreement with each prospective bidder in order to share needed information but prevent confidential information from becoming compromised during the process. This agreement may require both the operator and verification body to sign before any confidential data is exchanged between the parties.

It is recommended that an operator consider asking for technical proposals from any potential bidders that include (but are not limited to) the following information:

- *History and description of the verification body and its organization;*
- *Types of verification services they are accredited for (special sectors, etc.);*
- *Estimate of time required to complete the verification service – calendar of proposed dates and timing of proposed requests for change;*
- *Confidentiality policy;*
- *Price for providing verification services, proposed ARB accredited verifiers who will perform the services, and duration of the contract;*
- *Approach for completing the verification services and how results will be provided to the operator; and*
- *Contingency ("What if") clauses to cover any other risks or issues identified by the verifier that necessitate expanding the scope and time required to complete verification services***;**

Once the operator has received several competitive bids from verification bodies, the operator will select a verification body and negotiate a contract. Prior to beginning any actual verification activities, the selected verification body must submit a self-evaluation of its COI between itself and the operator to ARB, as specified in §95133. To comply with this requirement, the verification body may use ARB's COI/NOVS form (PTSD/GHG_03), available on the ARB verification website.

Important: Verification services may not commence until the verification body has ARB's approval to initiate verification services. The Regulation requires the verification body to submit the COI self-evaluation to begin the approval process and no verification services can be provided under the Regulation if ARB has not reviewed and approved the COI form. Therefore, the verifier may wish to begin the COI approval process before finalizing the contract.

The operator may choose to wait to finalize its contract with a verification body until after ARB approves the COI self-evaluation. The contract is for direct services between the operator and the verification body. ARB will not negotiate any part of the contract on behalf of either party. The section below lists some of the items to consider when negotiating the contract.

2.1.3.1 Contract Terms and Conditions – Items to Consider

- Confirmation of the Verification Process – The contract may identify the GHG emissions report that will be verified.
- Confirmation of the Verification Body – The contract may state that the verification body is accredited by ARB to perform verification services.
- Verification Standard – The contract terms may include a statement that the GHG emissions data report will be verified against the Regulation.
- Non-disclosure Terms – Both parties may agree on methods for identifying and protecting proprietary information.
- Facility Access – Both parties may agree on the verification body's facility visits.
- Documentation and Data Requirements – Both parties may agree on how and when emissions data, calculations, and other necessary information will be provided to the verification body.
- Timeframe of Contract – The triennial verification schedule requires full verification every three years, at a minimum. The annual verification schedule requires full verification the first year, and every third year thereafter, with a less intensive verification performed in the interim years. Your contract may consider this information, since a full verification is required each time a new verification body is selected.
- Schedule – Both parties may agree on a schedule to complete the verification services and for the delivery of the Verification Report and the Verification Opinion.
- Payment – Terms and method of payment will be determined and included in the contract. Typical payment terms include total value and schedule of payments.
- Contingency ("What if") clauses – Terms to cover expanding the scope and time required to complete verification services when issues identified by the verification team warrant this;

- Data/Misstatement Corrections – The parties may want to come to an understanding on how data issues that need correction will be handled and the schedule for these situations to be corrected. (Note: The verification body may not provide guidance or assistance regarding how to remedy inconsistencies).
- Contacts – Both parties may identify their respective contact leads.
- Conflict of Interest – Operator may wish to add a clause to end the contract if ARB does not approve the COI between the operator and the verification body

2.1.4 Issues for Operators to Consider

The commercial value of the fee bid (the total cost for the facility operator) may vary greatly between verification bodies. Operators are urged to look closely at the reputation and experience of the verification body in the operator's industry. A firm that has experience with similar facilities in California may have a better understanding of California-specific facility operations and be able to provide more efficient verification services to the operator.

A well-organized facility GHG accounting system may make verification a more straightforward process, which translates into less work for the verification body. If the operator does not provide sufficient information to the verifier, the verification body may not be able to accurately estimate the time necessary for providing verification, which could result in higher cost verification, than if more detailed information was provided at the outset.

Because verifiers are required to submit a verification opinion based on reasonable assurance that the operator conformed to the Regulation with no material misstatement, they will need adequate time to review the data. It is very important for both the operator and verification body to negotiate the total cost of the verification while understanding that the time needed for the verification body to complete the minimum required tasks is not negotiable.

2.2 Guidance: Preparing for Verification - Verification Bodies

When determining the scope of the contract with the facility operator, the verification body will need to determine the feasibility of providing verification services, and understand and manage the available resources and competencies of the verification body's staff. The verification body will also need to understand the scope and boundaries of the facility and data report, including applicability and complexity of the sources at the facility. This includes travel costs and the geographic extent of the facility boundary. The verification body will also want to understand, in general terms, how data is processed (i.e. in an automated plant information (PI) system or by several people in an informal fashion).

Because the costs associated with verification are dictated by the quality and transparency of the data management system, the scale of emissions or technical function may not be a good guide to verification complexity and time

required. A very large and complex facility with an excellent data management system may be easier (and quicker, and therefore cheaper) for the verifier, than a smaller facility with a poor GHG accounting system that requires much more time to track data through their reporting system.

2.2.1 Issues for Verification Bodies to Consider

Verifiers have been trained to manage their business risks associated with providing verification services under ARB's Regulation. Therefore, verification bodies might consider only accepting contracts with facility operators where they have enough expertise and resources to apply within the timeframe of the Regulation. Verification bodies might also want to take into consideration their workload and schedules before taking on more work.

In the event that a verification body is unable to receive needed information from a facility operator in a reasonable amount of time, the verifier may contact ARB.

2.2.2 Verification Team Roles

Various roles and responsibilities of the personnel providing verification services include:

Verification body means a firm or air district (AQMD/APCD), accredited by ARB, that is able to render a verification opinion and provide verification services for operators subject to reporting under this article. §95102(a)(200).

Verification team means all of those working for a verification body, including all subcontractors, to provide verification services for an operator. The lead verifier for the verification team shall be a lead verifier in the verification body. §95102(a)(204).

Lead Verifier means a person that has met all of the requirements in §95132(b)(2) and who may act as the lead verifier of a verification team providing verification services or as a lead verifier providing an independent review of verification services rendered. §95102(a)(106).

Independent Reviewer from §95131(c)(2)(C) is a lead verifier who has conducted the independent review of verification services and findings specified in §95131(c)(1) shall attest to his or her independent review on behalf of the verification body and his or her concurrence with the verification findings.

Verifier means an individual accredited by ARB to carry out verification services as specified in §95131. §95102(b)(205).

Sector Specific Verifier is an accredited verifier or lead verifier who is also accredited by ARB to carry out verification services as a specialist in one or more of the following sectors:

- Electricity transactions specialist for a retail provider or power marketer;

- Refinery specialist for a petroleum refinery or hydrogen plant;
- Cement plant specialist for a cement plant.

A sector specific verifier has specific industry knowledge, skills, and competencies to understand any complex issues related to cement plants, refineries, and electricity transactions. A verification team must have at least one ARB accredited sector specialist if it performs sector specific verification services for one of those sector operators. It is recommended that the sector specific verifier be part of the team that conducts the site visit.

Accredited Subcontractor is someone that may be accredited by ARB to perform verification services as a verifier, lead verifier, or sector specific verifier. A verification body may use an ARB accredited subcontractor for some verification services. However they cannot be used as the lead verifier on, or as an independent reviewer for, the verification team. A verification body may subcontract with an ARB accredited sector specialist to provide sector specific verification services to an operator.

Technical Staff may be a non-ARB accredited verification team member, employed by the verification body (directly or by contract), and is overseen by an ARB accredited verifier and supports the verification once a verification plan and sampling plan are developed. The person in this role may provide special knowledge or expertise regarding an industrial process or emissions source, or could be gaining relevant work experience by participating on the verification team as a trainee verifier.

Administrative Personnel may provide administrative assistance to the verification team and the verification body. These persons may account for up to three of the total staff requirement for the verification body.

Examples of Verification Related Tasks by Team Role

Tasks only an ARB accredited lead verifier or verifier is allowed to complete:

- Evaluate COI requirements
- Manage the planning and functions of the verification team
- Develop a verification plan and a sampling plan
- Interpret data checks and risk analyses as they relate to the sampling plan
- Develop an issues log and convey information about the issues to the operator
- Request revisions to the emissions data report
- Provide a verification opinion and detailed verification report

- Complete all other tasks in Regulation

<u>Tasks that might be completed by non-accredited technical staff under the direct supervision of an ARB accredited verifier:</u>

- Collect documents and other information from operator at the request of the lead verifier
- Email documents on behalf of the lead verifier (should cc the lead verifier)
- Assist with site visit
  - Review a subset of fuel meters and calibration records
  - Take notes and compile a written summary of site visit for lead verifier
- Technical assistance related to complicated process units or unit configurations
  - Explain chemistry/physics of process
  - Identify areas where measurement(s) may be difficult or complex
  - Interpret meter installation/calibration/maintenance procedures
  - Visually inspect fuel meters
  - Evaluate continuous emissions monitoring systems (CEMS)
  - Interview process engineer to better understand a technical issue
- Assist with understanding Code of Federal Regulation Part 75 requirements as they relate to electricity generation reporting requirements
- Conduct very limited data checks of a subset of calculations for which an ARB accredited verifier has already established how to perform the calculation
- Format documents and reports – ARB accredited verifier must complete the assigned verification tasks, but then may send the text of each section of the verification report to a non-accredited staff person to be formatted in a final report

<u>Tasks that might be completed by a non-technical staff person:</u>

- Handle scheduling and organization of verification services for verification body
  - Ensure deadlines are met
  - Handle logistics of site visits, including managing documents and records for each operator
  - Facilitate internal discussions and exchange of information within the verification body

2.2.3 Subcontracting

A verification body has specific requirements that it must follow if it elects to use subcontractors when providing verification services.

§95132(e) sets forth the following requirements which apply to any verification body using subcontractors:

1. All subcontractors must be accredited by ARB to perform the verification services for which the subcontractor has been engaged by the verification body.
2. The verification body must assume full responsibility for verification services performed by subcontractor verifiers or verification bodies.
3. A verification body shall not use subcontractors to meet the minimum staff total or lead verifier requirements as specified in §95132(b)(1)(A(1) and §95132(b)(1)(A)(2).
4. A verification body or verifier acting as a subcontractor to another verification body shall not further subcontract or outsource verification services for an operator.
5. A verification body that engages a subcontractor shall be responsible for demonstrating an acceptable level of conflict of interest, as provided in §95133, between its subcontractor and the operator for which it will provide verification services.

Non-accredited technical experts may be hired as subcontractors to assist with specific technical questions, such as those related metering or measurement accuracy, but may not provide verification services. The tasks that may be performed by non-accredited technical experts in Section 2.2.2 apply to subcontracted technical experts as well as those employed by the verification body.

2.2.4 Self Evaluation for Conflict of Interest and Notification of Verification Services (COI/NOVS)

Conflict of interest means a situation in which, because of financial or other activities or relationships with other persons or organizations, a person or body is unable or potentially unable to render an impartial verification opinion of a potential client's greenhouse gas emissions, or their person or body's objectivity in performing verification services is or might be otherwise compromised. §95102(a)(51).

Effective management of actual or perceived conflicts of interest that verification bodies may have with the facility/operator is critical to maintaining the credibility and integrity of the verification process. Because the verifier is reviewing the accuracy of the reported emissions data, as well as the operator's conformance with the requirements of the Regulation, the verification process must be independent, transparent, and free of any external bias for or against the operator and the emissions data report.

The purpose of the COI submittal requirement in §95133 is for the verification body to show its ability to determine and manage any real or potential conflict before performing verification services for an operator. The relationship between the verification body, its team members and the operator must not create or appear to create a conflict of interest. The verification body must assess the potential for conflict between themselves and facility operators, as well as between entities related to the verification body and companies that share management with the facility to be verified. Individuals within the verification body and any subcontractors must also be included in the conflict of interest review. The COI portion of the COI/NOVS form lists specific tasks set forth in the Regulation that are considered to create a high potential for conflict of interest. Table 2-1 provides a partial list of requirements related to assessing the potential for COI.

Table 2-1 Conflict of Interest Determinations – Regulatory Requirements

High COI **Verification may not commence §95133(b)**	**Low COI** **Verification may commence §95133(c)**	**Medium COI** **Submittal of a COI mitigation plan required §95133(d)**
1. Verification body and the operator share management or board of directors' memberships, or management staff of the operator have been previously employed by the verification body (or vice versa) in the last 3 years. 2. Over the last 3 years verification body staff provided the operator with services including GHG emissions, health and safety, accounting, financial statements, appraisals, opinions, legal services, broker dealer (see full listing of specific high-COI tasks in §95133(b)(2)). 3. Staff member of the verification body has provided verification services for the operator within the last 3 years, except as allowed in Regulation (§95130(a) and §95130(b)). 4. The lead verifier doing the independent review for the verification team has provided verification or non-verification services for the operator in the last year as specified in §95131(c)(1).	No potential conflict of interest is found. Over the last 3 years, any non-verifying services provided by a member of the verification body or subcontractor to the operator are valued at less than 20 percent of the proposed verification fee.	If the COI is not determined to be high or low, then it is deemed medium. Verification body submits a **COI mitigation plan** that includes (but is not limited to): 1. Demonstration that conflicted staff have been removed or insulated from the project. 2. Explanation of the changes to the organizational structure or verification body to remove the conflict of interest. 3. Other information that addresses the sources for COI. ARB Executive Officer (EO) evaluates the COI mitigation plan to determine if verification services may proceed.

Section 95131 of the Regulation requires the verification body to provide a Notice of Verification Services to ARB of its intention to initiate verification services. The NOVS portion of the COI/NOVS form contains the following items as required in §95131(a):

Staff List – The notice includes a list of staff that will provide services as the verification team, including the names of each verification team member, the lead verifier, and each subcontractor.

Role of Each Team Member – The roles and responsibilities that each verification team member will have during the verification must be clearly stated in the notice.

> **Note:** The lead verifier on the verification team is responsible for attesting that the verification team has carried out all the verification services as required by the Regulation. The lead verifier, who conducts the independent review of the verification services on behalf of the verification body, cannot be involved in the verification services for the operator during that year.

Skills Documentation – The notice must include documentation that the verification team has the skills required for the verification. If the verification services to be performed are for a retail provider or marketer of electricity, a cement plant, an oil refinery, or a hydrogen plant, an ARB accredited sector specific verifier is required for that sector.

Additional Information- The notice also includes the expected date(s) of the site visits. Any change in the planned site visit(s) must be communicated to ARB staff before the site visit may commence.

2.2.5 COI/NOVS Evaluation Approval Process

To commence any verification services for an operator, the verification body must secure ARB's approval of the potential for COI in writing, as specified in §95133(e)(1). A form has been provided that verification bodies may use to meet the requirements for submitting required information on COI and NOVS. The COI and NOVS forms may be submitted separately, or the verification body may submit the COI/NOVS at the same time, in order to streamline the process.

The COI form must be submitted at least **forty-five days** ahead of the planned start of verification. §95133(f). The NOVS form must be submitted a minimum of **ten working days** prior to the start of verification services, pursuant to §95131(a), in order to allow ARB the opportunity to make any arrangements to accompany the verification team on site visits and to monitor the verification activities.

After the COI form is submitted, ARB reviews and evaluates the form to determine whether the verification body's level of risk of COI associated with the operator meets the regulatory requirements to allow verification activities to proceed.

ARB staff will notify the verification body if the COI or NOVS information is not complete. Staff will evaluate the verification body's potential conflict of interest

with the operator, based upon the information provided by the verification body, within **forty-five days** of the submitted information being deemed complete.

- If there is a **high** potential for COI, ***verification services may not proceed.***
- If there is a **low** potential for COI, the verification body will be ***authorized to proceed*** after ARB confirms the potential for low COI***.***
- If there is a **medium** potential for COI, ARB will evaluate the *mitigation plan* submitted pursuant to 95133(d) and may request additional information before approving a verification arrangement.

Once the potential for COI is found to meet the regulatory requirements, ARB staff will notify the verification body in writing that the verification body is authorized to proceed with verification services. If there are any changes to the verification team the verification body must resubmit the COI form to ARB for reevaluation prior to commencing verification.

ARB's COI/NOVS form is available at:
http://www.arb.ca.gov/cc/reporting/ghg-ver/ghg-ver.htm.

2.2.6 Percentage of Fee

Previous non-verification work done by a verification body for the operator that exceeds a certain amount in the previous three years may be a potential for conflict interest. Therefore, §95133(e)(1)(D)(2)(c) requires specific information regarding the cost of past non-GHG consulting as a percentage of the verification body's gross income and (e) requires the same information for their GHG or electricity consulting.

§95133(c) states that conflict of interest will be deemed to be low where there is no high conflict of interest, and where any non-verification services provided by any member of the verification body to the operator in the last three years are valued at less than 20% of the proposed fee for verification services.

% of fee = 100 * (sum of fees or estimated value* for all services provided to operator from any member of verification body in past three years) / (proposed fee for current verification)

If the % of fee is greater than 20%, the potential for conflict of interest cannot be low.

*Note for Air District Staff: If a fee was not charged for past services provided to an operator, or if the fee structure for some reason does not accurately reflect the value of the services performed, the air district staff should estimate the value of past work as the sum of hours worked by each staff member multiplied by an appropriate hourly rate that reflects the value of the services provided by each staff member.

2.2.7 Rotation of Verification Bodies

The Regulation requires that the operator change verification bodies at least once every six years to avoid potential COI issues from a lengthy business relationship. This allows a verification body to remain impartial with each of their clients. This requirement will reduce complacency that may occur given the comfort and familiarity a verification body may develop with an operator's emissions data report after successive review.

2.2.8 Examples of COI situations

There is no way to specify every COI situation that may exist. However due to the nature of business, some situations are common but complicated. Below are a few examples of situations, with discussions and ARB findings based on regulatory requirements.

Example 1 – High Risk COI

An employee of a verification body assisted in developing a GHG inventory for a facility operator two years ago while that employee was working for a different company. The verification body has not previously had any business relationships with the facility operator and wants to verify the operator's emissions data report. Is there a conflict of interest in this case, and can the verification proceed?

Discussion: As stated in 95133(b)(2), there is automatically a high COI if any staff member of the verification body has provided any of the 16 listed services within the last three years. As a result, there would be a high COI between the verification body and the operator. It does not matter by whom the staff member was employed at the time the high-risk services were provided, and isolating the staff member in question from the verification team would not be sufficient to mitigate the potential for COI in this case.

Recommendations: ARB recommends that verification bodies have sufficient procedures in place to identify not only all past work the verification body has provided for a potential verification client, but also work that staff members conducted for the operator while employed by other organizations within the last three years. Not all past work with an operator constitutes a high COI, but operators will need to be aware of and disclose all past work with the operator so that the potential for COI can be identified, and if possible, mitigated.

Example 2 – Verification Body did prior CEQA Evaluations for Operator

Within the past three years, the verification body was responsible for reviewing an environmental analysis for a facility under the California Environmental Quality Act (CEQA). Members of the verification body specifically reviewed the calculations to account for GHG impacts, mitigation plans for managing GHG

impacts, and suggested and reviewed alternative methods to reduce those impacts. Is there a conflict of interest? Can the verification services proceed?

Discussion: When a verification body has conducted a CEQA analysis that includes an evaluation of GHG emissions, impacts and or/mitigation, this would result in a high conflict of interest under §95133(b)(2)(B), (developing greenhouse gas emission factors or other greenhouse gas related engineering analysis). CEQA climate change impacts analysis is considered greenhouse gas related engineering analysis, and creates a high conflict of interest due to its close relationship with

Recommendations: Since no verification services can take place between an operator and a verification body where there is a potential for high conflict of interest, ARB recommends verification bodies be aware of their entire company's prior consulting work as well as the consulting work of any subcontractors hired on this job and avoid verification in any instance where CEQA analysis or other potentially high conflict of interest work has taken place.

Example 3 – Medium Risk COI

In the past three years, a verification body has conducted non-greenhouse gas related consulting services for a facility operator for a total fee of $7,000. The services were not any of the 16 high-risk activities listed in §95133(b)(2). The verification body is now proposing to verify the operator's emissions data report for $10,000. Is there a conflict of interest in this situation, and what actions may be taken for the verification to proceed?

Discussion: As long as the consulting services provided to the operator do not include any activities designated in the Regulation as high risk, the potential for COI would generally be medium. The potential for COI would only be low if the past services were valued at less than 20% of the proposed verification fee. In this case, they constitute 70% of the proposed fee ($7,000 / $10,000), so the COI would be medium.

A medium potential for COI requires an approved mitigation plan for the verification to proceed. This would include isolating any individuals who have provided consulting services to the operator in the past from the verification team.

Recommendations: ARB recommends that verification bodies develop procedures for isolating individuals with medium potential for COI from a verification team. In general, no verification team members, including subcontractors, can have provided any services to the facility operator within the last three years. Individuals that have provided non-high risk services must be isolated from the verification team (§95133(d)(1)(A)).

Example 4 – Operational Control of a Facility is at the Corporate Level

A verification body is under contract to perform verification services for a facility. Although the verification body has done high-risk consulting for a sister company, they are reasonably certain that no conflict exists between themselves and the facility for which they are contracted to verify. However, it is later discovered that operational control for the facility as well as the sister company lies at the corporate, or entity level. Is there a conflict?

Discussion: In this situation, since the operational control for both the facility and the sister company is coming from a central location, it would be considered a high conflict situation and verification could not commence.

Recommendations: ARB recommends that all verification bodies find out who has operational control over a facility whose verification they are bidding on *before* they submit a bid for verification.

Example 5 – Operators who Hire a Company to Prepare their Emissions Data Report

An operator contracts a consulting company to prepare and submit their emissions data report to ARB. The operator then contracts a verification body to perform verification services. Additionally, the consulting company and the verification body have a previous business relationship. Is there a conflict between any of the parties?

Discussion: ARB's COI policy stipulates that there is not to be any conflict or potential COI between the operator and the verification body. As long as the verification body's prior business relationship with the consultant has nothing to do with this verification, there is no obvious conflict for these purposes.

Recommendations: If the verification body and the consultant have an ongoing business relationship, it is recommended they take precautions to insulate the overlapping portions of their businesses and these situations where they are associated with opposite parties of a verification.

Example 6 – Operators who Contract a Company to Facilitate their Contracts

An operator is subject to extensive Regulations from outside agencies. To simplify the process of obtaining a short-term contract they hire a company for the sole purpose of acquiring and facilitating contractual relationships for them. The contracting company hires both a consultant to prepare the emissions data report for the operator and a verification body to carry out verification services for them. Is there any potential for conflict between the verification body and either the contracting company or consulting company?

Discussion: Assuming that the verification body has assessed a low risk with the operator, verification services may occur. However, because the contracting company is acting as an agent of the operator, the verification body should evaluate conflict with the contracting company, in addition to the operator, and maintain a conflict-free status with the contracting company as well.

Recommendations: Like in example 5, if the verification body has any prior or ongoing relationships with either the contracting company or the consulting company, they should take steps to insulate those business obligations from the verification services for this operator.

Example 7 – Previously Undisclosed Conflict is Discovered During a Verification

A verification body files its COI/NOVS form with ARB stating that they have low conflict with the operator for which they are performing verification services. They are granted approval and begin verification services. During the verification process, a high conflict is discovered between the operator and verification body.

Discussion: When filing a COI form with ARB, the verification body is always expected to perform its due diligence thoroughly. However, there may be times when new information is discovered during the verification. Under §95133(g)(3), it is the obligation of the verification body to monitor and make full disclosure to ARB in writing of any potential COI situation that arises, within 30 days of discovery (§95133(g)(2)). The disclosure must include a description of actions taken or proposed to be taken to avoid, neutralize or mitigate the potential COI.

When emerging potential conflicts arise during a verification, ARB should be informed (§95133(g)), and the verification *must not proceed until ARB has completed a review*. Verification bodies that fail to disclose conflicts that they are aware of are in violation of the Regulation and may be subject to enforcement action, including rescinding accreditation of the verification body, its verification staff and its subcontractor(s) (§95133(g)(5)).

Recommendations: Late discovery of conflict is troublesome and potentially costly to both the verification body and the operator, and this example underscores the importance of thorough COI self-evaluations by the verification body. There may be serious consequences for failing to identify and disclose a potential COI, but ARB understands that mistakes can sometimes be made and the consequences will be minimized when verification bodies follow their legal obligation to disclose any new potential conflicts that emerge.

Example 8 – Emerging Conflict after Verification Services are Complete

What obligation does a verification body have to monitor potential COI after the verification opinion has been issued? For example, what would happen if a

verification body enters into a consulting contract with the operator? What if a member of the verification team leaves and is hired by the operator?

Discussion: The verification body has an obligation to monitor emerging conflicts of interest for a period of one year after completing verification services (§95133(g)(1)). The verification body must notify ARB's Executive Officer within 30 days of entering into any new contract with an operator they provided verification services to within the previous year (§95133(g)(2)).

Depending on the nature of the conflict, the Executive Officer may invalidate the verification finding, and the accreditation of the verifier and the verification body may be rescinded (§95133(g)). For instance, entering into any contract for an activity that constitutes a high risk for COI under §95133(b) may result in the verification opinion being invalidated. Entering into a contract for any activities not designated as high risk would require a detailed disclosure submitted to and approved by ARB (§95133(g)(2)).

A member of the verification team being hired by the operator within a year would constitute a high risk that may necessitate invalidating the verification opinion and the individual's accreditation. ARB recognizes that the verification body would have little control over such a situation, but the operator may then be required to have their emissions data report reverified by a different verification body.

Recommendations: The verification body should be very cautious about entering into any kind of consulting arrangement with the operator. If a conflict is found, the verification opinion may be invalidated and the verification body and any verifiers involved may be at risk of having their accreditations revoked. (§95133(g)(4)-(5)).

2.3 Verification Timeline

There are only a few rigid deadlines that exist in GHG reporting and verification. However, the logistics of procuring a verifier, providing COI/NOVS information, and working through possible correctable conformance issues may place a time constraint on both the operator and the verification team. Figure 2-B depicts the reporting and verification deadlines for reports due April 1 and June 1.

To more fully understand all of the elements that affect this timeline, consider an example of a facility operator whose GHG reports are due April 1. Assuming the operator begins the verifier selection process in January, it will take several weeks to research verification bodies, solicit bids, and choose a verification body. If the verification body is chosen by March 15, they will take a number of days to fill out the COI form, which must be submitted and approved *before any* verification services may begin (§95133(e)). If the COI is submitted to ARB by April 1 (which is also the reporting deadline for this operator), ARB could take up to 45 days for review. This means that if the COI/NOVS forms were submitted

together, for the purposes of this example, the first date that verification services could begin would be May 15. If the forms were submitted separately, the NOVS must be submitted at least 10 working days prior to the start of verification services (§95131(a)), which brings the verification services start-date to May 29. Keeping in mind that the preliminary verification opinion is due to the operator on September 17, (10 working days prior to the verification deadline), that gives approximately 3 months to perform the verification, from planning to detailed verification to evaluation of findings and completion.

Because verification is an iterative process, all parties are urged to consider the amount of time that will be spent gathering information and fixing correctable issues. ARB's experience thus far has shown that even simple verifications take more than one month from planning to drafting an opinion, during the first year of verification. Therefore, expect to take longer than one month, for the first verification, with complex operations taking up to several months.

To avoid missing the verification deadlines, ARB strongly recommends that facility operators plan ahead by securing their verification body well in advance of their reporting deadlines. It is recommended that verification bodies submit their COI information as soon as possible, upon commencing their contract with the operator, ensuring they update them as often as needed, to avoid further delay in performing verification services.

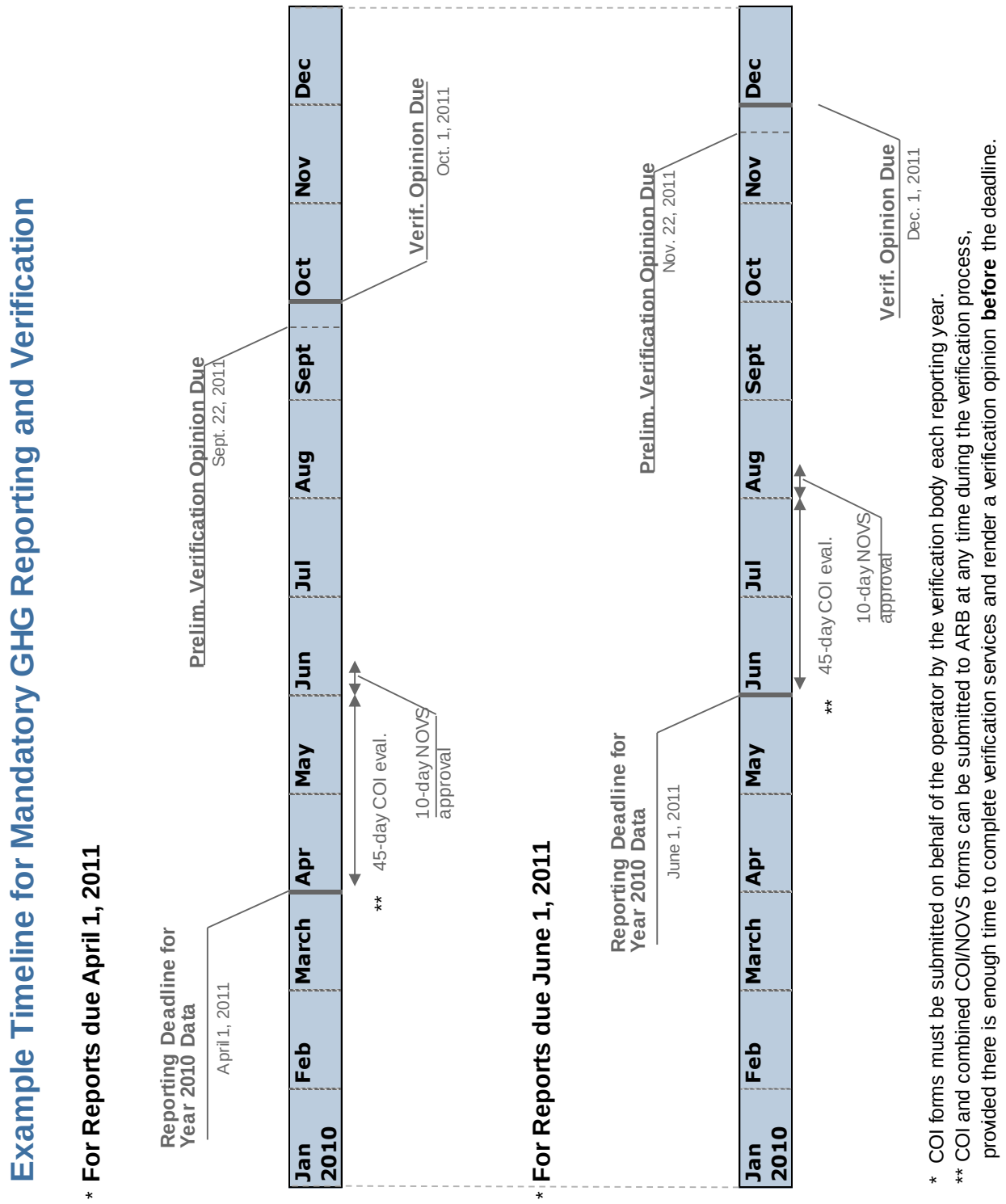

Figure 2-B Verification Process Timeline

CHAPTER 3: Core Verification Activities

Chapter 3 provides the verification team members with information regarding the Regulation's requirements to conduct the core verification activities, including developing a verification plan, developing a sampling plan, conducting site visits, and conducting data checks. Chapter 3 also contains a discussion of potential issues that could lead to material misstatement.

3.1 Planning – Initial Review of Systems and Processes

The first step in the development of a verification plan is to obtain some basic information from the operator. An information review provides the verification team the initial opportunity to review the GHG emissions data and assess where to focus verification efforts. Because operators will submit their emissions data reports via the ARB online Reporting Tool, it is recommended that verification bodies read the GHG Reporting Tool User's Guide for directions on how to access the emissions data report (http://www.arb.ca.gov/cc/reporting/ghg-rep/ghg-tool.htm). All verification team members have read-only access and cannot make changes to emissions data reports. The Reporting Tool provides access to all inputs to the emissions data report and any optionally attached documentation provided by the operator.

Table 3-1 provides a list of information and documents that could be reviewed both in the initial planning and during the detailed verification activities by the verification team to assess potential risks for errors and omissions when developing a verification plan.

3.2 Verification Plan

Once ARB has indicated verification services between a verification body and an operator may proceed (i.e. approved COI/NOVS), and the ten working day period in the notice of verification services has passed, the verification team may begin to develop and implement a verification plan. The plan will provide a roadmap for conducting the verification activities by outlining the specific activities to be conducted during verification services and identifying the expected timeline for completion of each activity.

Verification plans may vary according to the approach of a verification body, the size and complexity of the facility, and the emission sources or process activities at the facility. This guidance contains some key elements that must be included in every sampling plan. *Developing a verification plan is a required element of every verification, and specific requirements are addressed in 95131(b)(1-3).*

Before developing the verification plan, the verification team is required by the Regulation (§95131(b)(1)) to obtain and review the following information:

- Information to allow the verification team to develop a general understanding of facility or entity boundaries, operations, emissions sources, and electricity transactions as applicable;

- Information regarding the training or qualifications of personnel involved in developing the emissions data report;
- Description of the specific methodologies used to quantify and report greenhouse gas emissions, electricity transactions, and other required data as applicable; and
- Information about the data management system used to track greenhouse gas emissions, electricity transactions, and other required data as applicable.

A review of the preceding information will enable the verification team to develop a sufficient understanding of a facility so that they are able to effectively scope out the verification activities. The verification plan itself will identify expected dates of meetings, site visits, completion of verification services, and other relevant dates at the verifier's discretion. The plan must also include a description of the types of document and data reviews to be conducted during the verification. (§95131(b)(1)). The description of these reviews in the verification plan may involve a "high level" discussion; the detailed descriptions of specific document and data reviews will be included in the sampling plan and addressed through the data checks. At a minimum, §95131(b)(2) requires the verification plan to contain the following information:

- Dates of proposed meetings and interviews with the operator personnel;
- Dates of proposed site visits;
- Types of proposed document and data reviews; and
- Expected date for completion of the verification services.

In order to fulfill the verification requirements of the Regulation, ARB recommends the verification team also discuss the scope of the verification services with the operator and request any information and documents needed for initial verification services. This may be conducted during an initial kick-off meeting or phone call with the operator. The verification plan can be adjusted once the operator has provided the necessary preliminary information. The verification plan may be modified or updated as the verification progresses, such as if a date of a meeting or site visits change.

3.3 Site Visits

The Regulation requires a site visit for each facility that has submitted an emissions data report during each year a full verification is required, including in the first year of each three-year reporting cycle. (§95131(b)(4)). A site visit is optional, but not required, during less-intensive verification. In the case of power entities (retail providers or marketers), the verification team must visit the headquarters or other location of central data management. If a sector specialist is required for an operator, the expertise of the sector specialist will be essential for conducting a successful site visit. A verifier may decide that more than one

site visit is needed to gain access to the personnel involved in developing an emissions data report, to review original documents, or to evaluate conformance of monitoring equipment, etc.

3.3.1 Site Visit Planning

A successful site visit begins with effective planning. Time on site may be limited, and the verification team will want to maximize use of their time so that they are able to complete all of the required verification tasks and gather other relevant information. In preparation, it is recommended that the verification team begin with a background review of the facility's operations and emissions -- focus on the emissions data report and past reports, but also look at other relevant documents (see Table 3-2). For example, comparison of a Title V permit with the emissions data report may assist in verifying that all major emission sources have been reported. Making an inventory list of sources, source types, measurement devices, or other checklists that could aid in verification while on site is also recommended. This type of review may be conducted as part of the verification plan and sampling plan preparation.

The size and complexity of facilities will vary, and ARB does not specify a minimum amount of time that the verification team should spend on site, and professional judgment will be required to ensure a thorough verification is completed and that the verifier can issue a verification opinion based on reasonable assurance. The number of verification staff onsite and the amount of work the verification team chooses to do on site as opposed to in the office will also affect the length of the visit. ARB expects that site visits for more complex facilities such as refineries will likely take multiple days with more than one verifier present, while more simple facilities may take a half day to a full day. When planning a site visit, the verification team must allow enough time on site to complete required activities such as reviewing the emission source inventory, data measurement and management systems review, interviews, and data collection.

Before the site visit, the verification team is strongly encouraged to discuss the scope of the on-site activities with the operator, including any proposed meetings and interviews with the operator's personnel. Effective communication between the verifier and operator in advance will help to ensure the site visit goes smoothly. It is strongly recommended that verifiers provide the operator with a detailed agenda and list of expectations in advance, including data and documentation that verifiers will want to review while onsite. This will enable operators to make the preparations necessary to ensure that the verifiers are able to meet with all appropriate facility staff and have access to all necessary data, documents, and facilities in order to conduct required verification activities. This will also improve the efficiency of how time is spent onsite – time at the facility is generally limited, and many records can take a significant amount of time to retrieve if the facility does not have advanced notice of the types of data that will need to be available. If the verifiers want to have access to staff and

engineers with expertise in particular areas relevant to the verification (i.e. related to particular emission sources or process units), they will need to coordinate with the operator to ensure these staff are available during the site visits.

While the sampling plan does not need to be completed before the site visit, it is highly recommended that verifiers conduct a preliminary risk assessment (based on quantity of emissions and degree of uncertainty) to the extent possible so that verifiers have a plan for what sources to investigate in more detail while on site. Verifiers are also strongly encouraged to review calculation methods and measurement techniques for conformance with the Regulation to the extent possible before going on site to help inform investigations while on site.

The Regulation in §95131(b)(4) requires the verification team to conduct the following activities during the site visit:

- Check that all emission sources specified in §95110 to 95115 have been identified and reported properly;
- Review and understand the data management systems used by the operator to track, quantify, and report GHG emissions and/or electricity transactions; evaluate the uncertainty and effectiveness of these data management systems; and
- Collect and review other information that, in the professional judgment of the team, is needed in the verification process.

3.3.2 Source Inventory Review

To verify that all applicable sources have been reported, the verification team will likely need to conduct a facility walk-around, interview appropriate staff, and review process diagrams and documentation. The verification team will also want to look for situations where the operator may have reported sources not required by the Regulation, incorrectly classified sources, or for potential double counting of reported emissions (such as an operator including a source whose emissions are already accounted for upstream). It will be important to pay attention to applicable process and fugitive emission sources, as well as small stationary combustion sources, as these are the most likely to be omitted. When evaluating whether any emission sources have been omitted (or mis-reported), it will be helpful to review relevant documents such as process diagrams, air permits, etc., and to conduct interviews with technical staff. Questions to consider when reviewing the emission source inventory could include:

- Does the report include GHG emissions by gas type (CO_2, CH_4, and N_2O) for the entire facility, and GHG emissions produced for each fuel type?
- Have all applicable process and fugitive emission sources been included?
- Is fuel consumption reported separately by fuel type and by process unit (or groups of units) where separately metered?

- Is all fuel consumed by stationary combustion sources reported?
- Is any fuel for mobile sources or portable equipment reported separately as optional (not supplemental or summed)?
- Have any exempt sources under §95101(c), like portable equipment, been reported?
- Are CO_2 emissions from biomass combustion separately identified and reported?
- Were any efficiency metrics correctly calculated (if applicable)?

These questions are a starting point to begin gathering information. Table 3-2 lists some documents that will assist the verification team to determine if all emission sources have been identified.

3.3.3 Data Management System Review

When reviewing a facility's data management systems, the verification team may consider:

- How is raw data collected? How does it enter the system?
- How centralized is data management and processing at the facility? Is data from different process units managed in different systems?
- Is an individual responsible for managing and reporting GHG emissions? Is this individual qualified to perform this function?
- Who has access to and analyzes the data?
- Is appropriate training provided to personnel assigned to GHG emissions reporting duties?
- If the operator relies on external staff to perform required activities, are the contractors qualified to undertake such work? Is there internal oversight to assure quality of the contractor's work?
- What data security mechanisms are in place?
- What are the calculation methodologies/procedures used to calculate GHG emissions data at the unit and facility level?
- Has the operator only used the emission factors and equations from the Regulation to calculate emissions? If the operator uses emission factors from source testing, are they documented and appropriate?
- Does the management system capture the variety of the sources that comprise each emission category? Are there multiple types of stationary combustion fuel sources that require different fuel testing and sampling requirements?

- Does the system capture all the GHGs emitted from each emission source category?
- Are procedures for data processing and emission calculation well documented? Are appropriate documents created to support and/or substantiate activities related to GHG emissions reporting activities, and is such documentation retained appropriately? For example, is such documentation maintained through reporting plans or procedures and fuel purchase records?
- How transparent is the data management system?
- Are the mechanisms used to measure and review the effectiveness of GHG emissions reporting programs appropriate for this purpose? For example, are policies, procedures, and practices evaluated and updated at appropriate intervals?
- What parts of the system create the highest risk of introducing error or uncertainty into the GHG calculations?

In evaluating the data management systems, verifiers need to understand how data enters the system, transformations or calculations embedded within the systems, and to assess the effectiveness of these systems. Review of the data management system will inform the sampling plan and data checks. As part of the risk assessment for calculation uncertainty (§95131), verifiers should identify weaknesses in the systems that could lead to material misstatements or non-conformances in the emissions data report and document them in the issues log. Weaknesses in the data management system may not create a non-conformance standing alone, but shortcomings in the data management systems increase the likelihood that a non-conformance or material misstatement may be found in the emissions data report.

When reviewing the operator's data management systems, it is also pertinent to review the documented GHG Inventory Program and internal audit QA/QC programs required under §95104(b)-(c). For example, maintaining the GHG inventory program requires operators to maintain and document data acquisition and handling activities to measure, monitor, analyze, record, process and calculate parameters specified by the Regulation. Any concerns about the inventory program or procedures related to internal audit and review should be noted in the issues log. A weak or poorly documented inventory program or internal audit procedures would not directly result in a non-conformance; however, weaknesses in these systems create a higher risk of non-conformance or material misstatement in the emissions data report.

Verifiers should also be aware that a data management system may not always be a single system, but can sometimes be a disaggregated set of systems from which data must then be pulled together to compile the emissions data report. For example, data may not automatically be pulled into a single database or data

management system, but may initially remain in systems associated with the various process units (for example if the cogeneration plant or hydrogen plant on site has a separate data management system). The relevant data may have to be pulled from several locations at the facility to compile the emissions data report.

Another issue more common at larger facilities like refineries relates to how complex it can become to track data from the operator's final emission calculation spreadsheets back to the "raw" data. Not only may there be numerous sources involved, but there also may be multiple data layers associated with each source such that the final spreadsheet may have built upon tens or potentially hundreds of underlying spreadsheets and databases. For example, if a refinery has 3 refinery fuel gas systems, each with three different fuel meters, HHV online analyzers and carbon content lab analyses, there are at a minimum nine (and potentially many more) underlying data sources for any refinery fuel gas calculations.

Table 3-1 Items to Consider about Data Management Systems

Topic	Activity/Document Review
Data Management Systems	Gather sufficient evidence Locate the data collection system (is it centralized or decentralized) Evaluate the management system and parameters that are tracked • Inspect data acquisition and handling system • Conduct interviews and examine documents and records • Observe staff and systems during daily operations
Responsibilities for Implementing the GHG Emissions Report	GHG management plan Document and retention plan Equipment monitoring, calibration and maintenance records
Training	Training manual and records Standard operating procedures manual Consultant qualifications statement Monitoring plan/protocols

Methodologies	Evaluate calculation methodologies for conformance with the Regulation Equations/Emission factors used Quality Assurance/Quality Control plans for data collections systems, including CEMS

3.3.4 Review of Other Relevant Information

The verification team has discretion to gather any other information relevant to the verification while on the site visit. Examples of other relevant information or activities to undertake while on site might include:

- Interview the appropriate personnel, such as process engineers and metering experts, as well as staff involved in compiling data and preparing the emissions data report;
- Review contracts, and other **original** documents such as utility bills, log books, laboratory test results, to substantiate reported data and ensure that data sampling and monitoring are conducted as described in the Regulation;
- Make direct observation of equipment (fuel meters, CEMS, scales, and calibration equipment, etc.);
- Assess conformance with fuel analytic data requirements such as fuel meter accuracy requirements (OEM records, installation location, operating conditions, calibration records and frequency, etc.).

Verifiers will need to use their profession judgment when determining both the quantity and nature of additional information to evaluate on their site visit, taking into account that they must ultimately issue a verification opinion assessing for both material misstatement and conformance with reasonable assurance.

Table 3-2 Examples of Supporting Documents Relevant to Verification

Information/Data Required	Possible Supporting Documents
Review of Emission Source Inventory	
GHG Emission Source Inventory	• Emissions Data Report from Reporting Tool (to obtain initial list of reported stationary combustion, process, and fugitive emission sources) • GHG reports under other schemes/programs • List of facility permits • Facility plot plans showing direct emission sources • Process flow / piping and instrumentation diagrams • Fuel purchases records, by fuel type • Feedstock purchases • EPA Acid Rain Program reports • Indirect energy usage • Security and Exchange Commission Forms • Corporate annual reports • Map of operations
Measured Emissions from Continuous Emission Monitor System (CEMS)	
GHG Emissions	• CEMS Data Reports • QA/QC plan, QA/QC test records (from 40 CFR 75) • Emissions Data Reports prepared for federal agencies • Fuel Composition Reports (for co-firing of fossil fuels and biomass or waste derived fuels) • Calibration Information/Reports • Operating Methodology
Calculated Emissions from Stationary Combustion	
Fuel Usage (by fuel type)	• Monthly Utility Bills • Fuel Purchase Records • Fuel Sale Records • Fuel Usage Reports (reporting frequency dependent on method used) • Meter, scale or other measuring device calibration information and testing records • Unit or group of units operation logs • Stock Balances • Lab sample and analysis, etc.
Non-Default High Heat Value (HHV) or Carbon Content (by fuel type)	• Fuel Supplier HHV Records • Lab Analysis Reports • Sampling Protocols/Reports and chain of custody processes • Lab Certification for Applicable testing (ISO17025) • Lower Heat Value records • Non-Default Lower Heat Value conversion factor • On-line instrumentation sampling reports • Equipment Calibration Information (including accredited calibration gases) • Records of average daily molecular weights for refinery fuel gas system A or flexigas

Biomass and Municipal Solid Waste Fuels	• Annual Steam Generation, pounds /year • Boiler Design Heat Input/ Boiler Design Heat Output, MMBtu/pound Steam • Source Specific Emission Factors • Source test plan approved by ARB • Scale calibration information
Non-Default Source Specific Emission factors for CH_4 and N_2O Combustion Emissions	• Source test plan approved by ARB • Annual source tests under the supervision of ARB or the local air district
Fugitive CH_4 Emissions from Coal Storage	• Coal Purchase Records • Default emission factor for CH_4 based on coal origin and mine type used
Indirect Electric Usage	• Electric Utility Bills • Pro-rated Electric Utility Bill Calculations
Indirect Thermal Energy Usage (by provider)	• Monthly Utility Bills • Monthly thermal purchase and sales reports • Records of annual thermal use by facility in BTUs

3.4 Sampling Plan

The verification team does not assess every piece of data that was used by the operator to generate the emissions data report; rather, the verification team will take a risk-based approach in verifying the report. This involves a targeted sample of the emissions calculations, data acquisition equipment, data processing, and data management systems to check for material misstatement and conformance with the Regulation. (§95131(b)(8)). The sampling plan will identify those emission sources, data systems and processes that pose the greatest risks of potential misstatement or non-conformance. The sampling plan should guide the verification team during the verification in selecting which data requires further evaluation.

The sampling is developed based on a **strategic analysis** of the inputs to the emissions data report, rigor of the relevant GHG or electricity transactions data management systems, and the level of coordination within an operator's organization to manage the equipment and systems used to develop the emissions data report.

Fundamental to the process is the concept of **risk**. In the context of GHG verification, the two factors that contribute to risk of material misstatement for an emissions source are: 1) magnitude of emissions, and 2) calculation uncertainty. The latter category can be interpreted broadly to include uncertainties that measurement equipment are accurate, that management systems will produce an accurate result for the source, and that the calculations were conducted accurately and using a method in conformance with the Regulation. Calculation uncertainty can take into account anything that may lead to the material misstatement of emissions data.

Each sampling plan is required by §95131(b)(8) to include the following three items (§95131(b)(8)):

1. A ranking of emissions sources by the amount of contribution to total CO_2 equivalent emissions (or by power exchanged for power entities) for the operator;
2. A ranking of emissions sources with the largest calculation uncertainty (both for emissions and electricity transactions); and
3. A qualitative narrative describing the uncertainty risk assessment.

The first item requires the verifier to list every emitting activity in the Detailed Emission Records along with the CO_2 emissions from highest to lowest. The second item will require both preliminary review and professional judgment. ARB does not expect that verifiers will be able to rank all the emissions sources by uncertainty numerically for every facility. Rather, verifiers should be able to rank in a relative sense what sources have relatively higher or lower risk of misstatement at each facility. This could be accomplished, for example, by ranking the risk as high, medium or low, or on a one to five scale. The purpose of this step is to ensure that sources with higher uncertainty are not neglected from subsequent sampling.

The **qualitative narrative** of the uncertainly risk assessment is an expanded synthesis of the information contained in the rankings, and includes more detail on specific risks. As stated previously, risk is based on the emissions contribution of different fuel/process systems, and the potential risks of misstatement in the data acquisition equipment, data sampling and frequency, data processing, emissions calculations, data reporting, and management policies or practices. For example, in evaluating the uncertainty of the data acquisition equipment, a verifier may consider the type, age, and availability of maintenance records. For data processing, the verifier may consider how the data management system records and tracks data that supports emissions calculations (i.e. does it involve a simple spreadsheet with data entered by hand, or direct readings from a data logger?). The risk assessment in the sampling plan evaluates how much confidence rests with the underlying infrastructure that generates emissions data in order to target the sampling that will follow. Pursuant to §95131(b)(8)(C), the verifier must consider the following areas of risk when developing the risk narrative:

- Data acquisition equipment, including sources (meters, CEMS), procedures, analytical equipment, calibrations and maintenance;
- Data sampling and frequency (which data points are used and how often data is collected);
- Data processing and tracking (including the manipulation and transformation of raw data);
- Emissions calculations;
- Data reporting;

- Management policies or practices in developing emissions data reports (i.e. accountability, QA/QC procedures, sign off).

Sampling plans are dynamic; as relevant information becomes available and potential issues emerge relating to misstatement or nonconformance with the Regulation's requirements, the verification team may make changes to the sampling plan. Developing most of the sampling plan prior to conducting the site visit will be helpful to inform on-site reviews, such as determining which fuel meters and data acquisition systems to evaluate in greater detail. However, the site visit will provide the verifier with considerably more information, so it becomes an iterative process, and revisions to the sampling plan following the site visit will be necessary in order to describe how the result of the evaluation of the systems and items in the risk narrative and if/how the sampling will need to be expanded **The risk narrative should be updated at the end of the verification to identify how each risk was addressed.**

The focus on risk in the sampling plan requirements is designed to help target the verifier's efforts in a way that will maximize both the effectiveness and the efficiency of the verification process. Spending extra time on planning will pay dividends later by targeting the verification team's efforts to focus on sources with the greatest potential to contribute to a material misstatement or result in a non-conformance with the Regulation. Pursuant to §95131(b)(8), after all of the risk assessments have been completed, the sampling plan should identify:

- Sources targeted for data checks;
- Types of documentation requested/reviewed for each source; and
- Methods used to conduct data checks for each source.

In the context of risk, it is important that high risk sources are targeted for data checks, and that verifiers do not neglect to review data acquisition and data processing (especially for conformance with the Regulation), as well as checking emissions calculations. For example, for a high-risk source identified in the sampling plan, a verifier may review the fuel meter for conformance with accuracy requirements in the Regulation, and review analytical data capture rates in addition to recalculating the emission calculation methods and independently calculating all or a subset of the emissions from that source.

The sampling plan must be retained, as specified in §95131(b)(8)(E), either in paper, electronic, or other format, for a period of not less than five years following the submission of each verification opinion. Pursuant to §95105, ARB may request a copy of the sampling plan at any time.

3.5 Data Checks

To determine the reliability of the submitted emissions data report, the verification team will use data checks following the requirements of §95131(b)(9). This is not a duplication of all emissions calculations, but rather checking of specific subsets

of the reported data based on areas of highest contribution of emissions or risk of uncertainty as identified in the sampling plan.

Selection of data subsets for checking involves a review of the largest contributions to overall emissions, as well as the emissions associated with the greatest potential for misstatement (highest uncertainty) in calculations of emissions and electricity transactions. Data checks will establish if any of the sources identified in the sampling plan contain material misstatements or nonconformances. Data checks may include retracing data from spreadsheets to the data sources, recalculating emissions estimates to check original calculations, or reviewing how/when calibrations were completed, etc.

Figure 3-A illustrates the steps that emissions data goes through before it is entered into the emissions data report, from measurement of fuel analytic data to the final input into the ARB emissions data report. A single box in the diagram, like data processing, may actually involve multiple steps and data transformations in spreadsheets before the data is compiled into the final report.

Figure 3-A Conceptual GHG Emissions Data Chain

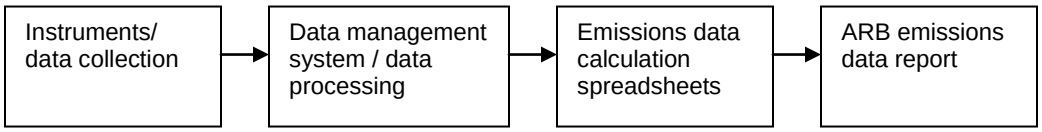

The figure is meant to draw attention to the fact that data checks that focus exclusively on one part of the chain, such as the operator's final emissions calculation spreadsheets or the ARB emissions data report, will neglect key components of the data chain (and consequently may miss significant errors or non-conformances). Human or technical errors can enter into any part of the chain, from instrumentation (accuracy, calibration, etc.), to data management/processing (unit conversions, appropriate equations/methods, temperature/pressure corrections, etc.), to final spreadsheet calculations and ultimate entry into the ARB Reporting Tool. The more stages there are in a data chain, the higher the risk for errors. In addition, systematic errors somewhere in the chain may go undetected if the results of the data output are plausible. For these reasons, it is recommended that the verification team's sampling and data checks address all aspects of the data chain, and for high-risk sources, be able to trace and recalculate data throughout the chain.

Section 95131(b)(9) requires the verification team to include the following when conducting data checks:

- Assurance that the operator used the appropriate methodologies and emission factors for the emissions sources and electricity transactions required in §95110 - 95115 of the Mandatory Reporting Regulation, as applicable;

- Sources targeted for data checks (for both emissions and electricity transactions, as applicable) are based on their relative sizes and risks of material misstatement as indicated in the sampling plan;
- Reliance on professional judgment to determine the scope, number, and extent of data checks required to conclude with reasonable assurance whether the reported emissions and transactions are free of material misstatement and conform to the Regulation.

When conducting data checks by recalculating a sample of emissions data as described in the sampling plan, it is necessary to choose representative data, with a reasonable scale of sampling to be able to provide a reasonable level of assurance as to the quality of the data. The verifier will compare their own calculated results with the reported data in order to confirm the extent and impact of any omissions and errors. The verifier may need to investigate a source of discrepancies (i.e. are the errors systematic or random). When including data checks in the Verification Report, transparency is critical. The verification team should adequately explain what each data check represents. Additionally each step in the data check should be listed independently. For example check fuel consumption data, and then confirm the emission calculations as two separate line items rather than combining into one. If calculation mistakes are identified, the sampling plan may be amended to reflect this, and the tests and results of data checks should be documented in the issues log and verification report.

A good verifier will look at data with a sceptical eye and ask questions of multiple people in order to determine if the relevant information is widely known in the organization. Such questions may help the verifier determine if the GHG accounting process is important enough to the operator to have that information known by employees involved with the data.

Some large facilities, like refineries, may produce an overwhelming amount of raw data for the verifier to review. Trending the data, comparing similar sources, and triangulating data are critical tools for the verifier. Trending data for a source over the year or several years (if possible) will allow the verifier to identify potential issues. Data from similar units should be compared and examined for inconsistencies. Comparing the output to input or other parameters may provide a useful metric in determining the validity of data. Inconsistencies in the data do not necessarily indicate a problem; however, they do indicate the need for further examination. In order to do these comparisons, the verifier will have to obtain more than just the minimum data for calculating emissions; verifiers may need to obtain data on other process parameters for evaluation.

The verifier will follow data trails via documentation, people, and processes, and may need to ask for more information. If the verifier has trouble compiling information and documentation that supports emissions calculations and conformance requirements because the operator is not forthcoming, the verifier should contact ARB staff at ghgverify@arb.ca.gov.

After reviewing the data trail, verifiers may review facility details in the Reporting Tool by clicking on the facility name. The verifier has read-only access, but this review may help the verifier understand how the facility set up their data in the Tool. Because information about the cogeneration system is not provided in the Facility Report, verifiers will need to use this method of viewing data in the Tool for cogeneration facilities (see http://www.arb.ca.gov/cc/reporting/ghg-ver/verifiers/rt_guid.pdf).

3.6 Assessing Material Misstatement

The following equation may be used to determine percent accuracy of the facility's total emissions data after the data checks have been completed. For power entities with electricity transactions, the total reported Megawatt hours (aggregate of purchases, sales, imports, and exports) should be used in the denominator.

$$\text{\% Accuracy} = 100 - \left| \frac{(\Sigma(\text{errors} + \text{omissions} + \text{mis-reporting}) * 100)}{\text{total reported emissions}} \right|$$

The numerator consists of the sum of errors, omissions, or mis-reporting found by the verifier for the subset of data that was included in the data checks. If the verification team determines with reasonable assurance that the percent accuracy of the operator's total emissions are 95% of the 'true value', (i.e. total misstatements within +/- 5%), the verification team can conclude that the emissions data report is free of material misstatement.

The inherent accuracy of measurement systems is not included in the calculation of percent accuracy (material misstatement threshold). If a fuel meter conforms to the Regulation and is accurate within +/-5%, the assumption is that the meter readings are the true value, and any uncertainty associated with that meter is ignored for the purposes of assessing for material misstatement. Similarly, for other analytic data such as heat value or carbon content analysis where an ASTM method is specified, the verifier should evaluate conformance with the ASTM method; however, uncertainties associated with the approved method would not be included in an assessment of material misstatement.

An assessment of material misstatement is conducted separately, when applicable, for:

- Total reported facility GHG emissions (metric tonnes CO_2e);
- Total reported facility indirect electricity purchases (kWh); and
- Total electricity purchases, sales, imports and exports for power entities (MWh).

The Regulation currently excludes purchased thermal energy from the material misstatement, so reported purchases of thermal energy will be evaluated based on conformance with the Regulation. In order for a facility to have a positive verification, as defined in §95102(a)(151), **all** of the applicable categories (electricity transactions, or emissions and indirect electricity) must be free of material misstatement.

During the course of the data checks, the team may find that some sources may have been underestimated (resulting in a negative error), while other sources were overestimated (resulting in a positive error). When assessing for material misstatement, the equation accounts for the offsetting of positive and negative errors. The following examples illustrate how to assess for material misstatement using the equation in this section.

Example 1 – Material Misstatement assessed based on total reported emissions

Consider a hypothetical facility with only four stationary combustion sources. After the verification team completes all of the data checks, a number of misstatements have been identified (summarized below). Is there a material misstatement?

	Operator Reported ($MTCO_2e$)	Verifier Calculation ($MTCO_2e$)	Discrepancy ($MTCO_2e$)	% difference
Boiler 1	30,000	31000	-1,000	-3.33%
Boiler 2	30,000	25000	5,000	16.67%
Boiler 3	10,000	11000	-1,000	-10.00%
Boiler 4	10,000	11000	-1,000	-10.00%
TOTAL	80,000	78000	2,000	2.50%

The emissions of one boiler have been overstated, while the emissions from the three remaining boilers have been understated. Applying the material misstatement equation, in this case:

% accuracy = 100 – ([-1,000 + 5,000 – 1,000 – 1,000] * 100) / 80,000

= 100 – ([2,000] * 100) / 80,000

= 100 – 2.50 = 97.5% accuracy

In this case, the report is free of material misstatement even though individual sources may have error greater than 5%. Material misstatements are evaluated based on total reported emissions, not based on individual sources. *However, ARB wants the most accurate data possible and strongly recommends that all errors be corrected whether or not they result in a material misstatement.*

This example assumed that the verifier was able to calculate the total emissions for each source, and for the facility. How does a verifier assess material misstatement when a) sampling includes only a subset of data, or b) the verifier cannot estimate an exact figure for a particular source due to uncertainty that has to be accounted for? The next two examples address these questions.

Example 2 – Systematic errors

Consider a different facility with four sources. In this case, the verifier has decided to review all of the records for the largest emissions source. Two medium-sized boilers are nearly identical in design and operation, and the verifier felt it was sufficient to sample several months of data from them. The smallest boiler was identified as low risk and not included in the sampling plan.

NOTE: This description of data sampled in this hypothetical problem is for illustrative purposes only, and should not be used as guidance when determining how much sampling to do at any particular facility.

	Operator Reported ($MTCO_2e$)	Data reviewed
Boiler 1	60,000	all data reviewed
Boiler 2	15,000	3 month sample
Boiler 3	15,000	1 month sample
Boiler 4	5,000	not sampled
TOTAL	95,000	

During the data checks, the verifier identified a systematic error in the emission calculations of Boilers 2 and 3 that led to a systematic understatement of emissions. However, because the verifier has only reviewed several months of the data, does the verifier now have to expand the sampling plan so that they can calculate the total discrepancy?

Not necessarily, and if the there is a strong indication that the error is systematic and has occurred throughout the year, the most appropriate step could be to extrapolate the results for the reporting year based on the % discrepancy calculated for the source. For example, if several months of data are analyzed and the verifier's calculated total is 10% higher due to a systematic error, the verifier would then multiply the total annual emissions for that source by 10% to estimate the actual emissions (see below). However, it would **not** be correct to extrapolate on the basis of time alone (i.e. multiplying by 365/90 if 90 days were sampled). This would imply that emissions were constant throughout the year, which is unlikely to be a valid assumption. Rather, if there is a systematic under- or over-estimation, that percentage deviation should be applied to the total annual emissions for the source for the reporting year.

	Operator Reported ($MTCO_2e$)	Verifier Calculation ($MTCO_2e$)	Discrepancy ($MTCO_2e$)	% difference
Boiler 1	60,000	60,000	0	0.00%
Boiler 2	15,000	16,500	-1,500	-10.00%
Boiler 3	15,000	16,500	-1,500	-10.00%
Boiler 4	5,000	not sampled	N/A	N/A
TOTAL	95,000	N/A	-3,000	-3.16%

Also, note that if a source is identified as low risk (such as Boiler 4) and has not been evaluated in the data checks, it would be excluded from an assessment of material misstatement. In this example, however, it would be appropriate for the verification team to expand their sampling to determine if the systematic error identified in boilers 2 and 3 also affected the calculations of boiler 4. The verifier could review a small sample of data from boiler 4 as part of additional data checks.

Remember, it is not necessary for a verifier to recalculate all of a facility's emissions to assess for material misstatements. Rather, ARB recommends that the verifier focus on sources identified in the sampling plan and targeted in the data checks.

Example 3 – Measurement Uncertainty

Returning to the facility discussed in Example 1, suppose that during the site visit, you discover that the fuel meter for Boiler 1 is not accurate within +/-5%. The fuel meter has not been calibrated in several years and was not operating under conditions specified in the OEM documentation for much of the reporting year. After some engineering analysis, you estimate that the meter may have been as accurate as +/- 8% at best, but may also have been as inaccurate as +/-20%. As the verifier, what do you do?

First, this example demonstrates a non-conformance with the fuel meter accuracy provision of the Regulation that will result in an adverse verification opinion regardless of whether or not there is a material misstatement. However, the verifier must still assess for material misstatement because the verification opinion must address both material misstatement and conformance. Recall that when meters are in conformance with the Regulation, inherent uncertainty does not need to be accounted for. When a meter is not in conformance, it is recommended the verifier estimate a "worst-case" uncertainty – in this example +/- 20% – to assess whether the non-conformance also results in a material misstatement. The verifier would then examine if either the worst-case overestimate or underestimate would result in an adverse opinion. If either estimate would result in a discrepancy > +/-5% for the facility total emissions, the result would be a material misstatement in the verification opinion.

Case A: +20%	**Operator Reported ($MTCO_2e$)**	**Verifier Calculation ($MTCO_2e$)**	**Discrepancy ($MTCO_2e$)**	**% difference**
Boiler 1	30,000	**36,000**	-6,000	-20.00%
Boiler 2	30,000	25,000	5,000	16.67%
Boiler 3	10,000	11,000	-1,000	-10.00%
Boiler 4	10,000	11,000	-1,000	N/A
TOTAL	80,000	83,000	-3,000	**-3.75%**
Case B: - 20%	**Operator Reported ($MTCO_2e$)**	**Verifier Calculation ($MTCO_2e$)**	**Discrepancy ($MTCO_2e$)**	**% difference**
Boiler 1	30,000	**24,000**	6,000	20.00%
Boiler 2	30,000	25,000	5,000	16.67%
Boiler 3	10,000	11,000	-1,000	-10.00%
Boiler 4	10,000	11,000	-1,000	N/A
TOTAL	80,000	71,000	9,000	**11.25%**

In this scenario, the verifier would not have reasonable assurance that the report is free of material misstatement because an underestimate of 20% in Boiler 1 would result in a misstatement >5% in the total reported emissions (i.e. 88.75% accuracy). In any case, where the operator has one or more non-conformances with the fuel use measurement accuracy requirement and a majority of emission are calculated using these devices it is highly likely that the verifier cannot be assured the emissions data report is free or material misstatement.

3.7 Conformance with the Regulation

In order to receive a positive verification opinion, an emissions data report must conform to the requirements of the Regulation. Any non-conformance that is not corrected before the verification deadline will result in an adverse opinion, so it is critical for the verification team to evaluate conformance with the Regulation in their risk assessments, site visits, sampling, and data checks. Examples of non-conformances include:

- Required emission sources not reported
- Emission sources not subject to reporting included in the emissions data report and not identified as optional
- Use of calculation methods or emission factors not specified in the Regulation
- Required data collection or sampling methods not followed when specified (i.e. did not follow specified ASTM method when, or sampling less frequently than, required by the Regulation)
- Missing fuel analytical data > 20% for a fuel source
- Inaccurate fuel meters (accuracy outside +/-5% when collecting data used in emission calculations)

Verifiers are not responsible for assessing conformance with administrative requirements in the Regulation, such as record keeping provisions, that do not directly relate to the development of the emissions data report. Calculation errors will generally be addressed during the material misstatement assessment activities, though provisions related to data collection, capture and use of approved calculation methods will be subject to conformance requirements.

Some non-conformances, such as the incorrect calculation methods or the omission of required emission sources, can be corrected provided that the data is available. However, other non-conformances may not be capable of being corrected, such as when data was not sampled in accordance with the Regulation (inaccurate meters or less frequently than required) or not sampled at all. In these cases, an adverse opinion may be unavoidable for the current verification. The operator will need to address the underlying issue to avoid an adverse opinion in subsequent years.

3.8 Less Intensive (or, Interim) Verification

Section 95130(a) allows operators subject to annual or triennial verification to opt for less-intensive verification during the second and third years of a verification cycle following a positive verification opinion in the first year. This option is allowed because the verifier will have done a very thorough risk assessment within the last three years, and as long as operations and emission sources at the facility have not changed significantly (by adding emissions sources, for example), the risks of misstatement in the emissions data should be very similar to the previous year's data, and a risk assessment conducted as part of the last full verification would still be considered valid. Therefore, the verifier may use the previous year's sampling plan as a basis for conducting verification.

Interim year less-intensive verification requires the same level of reasonable assurance from the verifier that the emissions report conforms to the Regulation and contains no material misstatement. Less-intensive verification does not require a site visit, but the verifier *may* still need to visit the site if facility modifications have occurred in the past year resulting in new emission sources or if there have been changes to methodologies used in emission calculations as documented in the change log, as described in §95105(c)(12). A verifier's ability to provide reasonable assurance is a regulatory requirement and supersedes an operator's regulatory flexibility to have a less intensive verification.

Less-intensive verification principally focuses on data checks, and is based on the risk assessment in the sampling plan developed for the last full verification. Relying on a prior sampling plan during less intensive verification does <u>not</u> imply only rechecking the same sources and documents targeted for data checks in prior years. The risk assessment conducted in the prior sampling plan along with the past issues logs inform the verification team what sources to target for data checks and what documents to review during interim years.

Some verification bodies (that are risk adverse) may insist that they conduct a site visit every year to ensure that they fully understand the facility's emissions sources. If the verification body does not accept less intensive verification, the operator will need to either have that verification body conduct a full verification, or contract with a different verification body. However, because a full verification is required after a change in verification body, the operator will have to have full verification for that next year in either case.

3.9 Emissions Data Report Modification

When operators submit their emissions data reports, they are certifying that the information in the report is accurate and complete. However, ARB recognizes that unintentional mistakes can occur, and §95131(b)(10) allows the emissions data report to be modified to address issues prior to the verification deadline. In order to receive a positive verification opinion, the Regulation requires that the operator correct issues that would otherwise result in material misstatement or non-conformance, if possible, prior to the verification deadline(§95104(d)(1). ARB expects that most, but not all, issues that would result in an adverse opinion can be corrected if operators work to address them in a timely manner. Operators are also encouraged, but not required, to correct any minor errors that may not lead to material misstatements so that the most accurate emissions data is reported, even if these would not result in an adverse opinion.

After an emissions data report has been certified by an operator, it can no longer be modified by the operator, unless requested to do so by its verification body. After revisions are complete, the data is once again certified by the operator and made available to the lead verifier. This is an iterative process and may take more than one round of revisions by the operator for a verification body to render its final verification opinion.

It is good practice for verifiers to limit the number of requests for revisions. It is best practice for verifiers to compile a list of any issues in their issues log prior to requesting revisions so that operators may address all relevant issues during a single modification. Verifiers may also indicate to operators which issues, if not addressed, would result in an adverse opinion either individually or cumulatively. However, in some cases more than one revision may be necessary, especially if new issues are identified after the initial revision.

For guidance on how to modify or verify data within the Reporting Tool, see the step-by-step guides for using the Reporting Tool available at: http://www.arb.ca.gov/cc/reporting/ghg-rep/ghg-tool.htm.

3.10 Report Drafting – Detailed Verification Report

After the core verification activities have been completed, the verification team must draft a detailed verification report to deliver to the operator as required by §95131(c)(2). The detailed verification report summarizes the activities conducted by the verification team and relevant findings. Verification teams have

some discretion in how to prepare detailed verification reports; however, pursuant to §95131(c)(2), the following information must be included in every detailed verification report:

- The verification plan;
- Detailed comparison of the data checks with the submitted emissions data report;
- Log of issues identified in the course of verification and their resolution;
- Qualifying comments on findings during the verification services.

The detailed verification report therefore provides an overview of the work conducted by the verification team, and provides evidence to support the final verification opinion. In addition to your client, the audience of the verification report may also be ARB. The verification report is a critical document that ARB will look at when conducting audits of verification bodies and when resolving issues that arose during verification. Even if ARB auditors have accompanied the verification team on the site visit, they may not have been privy to follow-up discussions or requests and are not as familiar with the site as you or your client. Therefore, it will be useful for the verification team to include the following information in the verification report:

(1) a detailed description of the facility or entity including all sources and boundaries;
(2) a detailed description of data acquisition, tracking and emission calculation systems, and how these systems were evaluated;
(3) an acknowledgment that the verifier has ensured every covered source has been reported and that *de minimis* and missing data have been evaluated; and
(4) a detailed narrative summary of documents and data reviewed during the data checks, as well as a description of activities conducted on the site visit.

Other information may be included at the discretion of the verification team. The sampling plan is not required to be included in the report, though it may be included at the discretion of the lead verifier.

When providing the detailed comparison of data checks, it is recommended that the verification team provide enough detail to indicate which sources were checked, the types and quantity of data that were evaluated for each source, and any discrepancies that were identified. Verifiers are strongly encouraged to include narrative texts and lists to make summary of data checks transparent. For example, Table 3-3 includes an example summary table of the data checks conducted for a facility.

Table 3-3 Example Summary of Data Checks

Source	Data Reviewed	Units	Verifier Calculated Value	Operator Reported Value	Identified Discrepancy	Comments
Unit 1	Fuel volume reported (Jan 1, 2010 – Jan 31, 2010);	mscf	55,442	54,212	1,230	Missing data not accounted for in spreadsheet calculations
Unit 1	heating value measurements (Jan 2010);	Btu/scf	1,082	1,027	55	Inappropriately used default HHV
Unit 1	spreadsheet calculations (Jan 2010)	MTCO2e	3,220,168	2,951,927	26,824	Result of two previously identified errors
Boiler 1	Utility invoices(May-Oct 2010)	mscf	12,344	12,344	0	No misstatements identified
Boiler 2	Coal deliveries (Oct-Dec 2010);	Short tons	3,092	3,406	-314	Spreadsheet calculation error identified

The issues log is where the verification team identifies issues and their resolution (if any). Issues can include individual misstatements that by themselves would not be a material misstatement but could be in aggregate, as well as qualitative issues like weaknesses in data management systems that could ultimately affect the emissions data report. The issues log is an important part of the "evidence trail," which supports the verification findings, increases transparency for the independent reviewer and ARB, and will be relied upon if there are disputes with operators over the verification findings.

In the example in Table 3-3, the issues log would include a summary of the discrepancies identified in the Generating Unit 1 and Boiler 2 calculations, and indicate if these issues were corrected by the operator prior to completing the verification. ARB suggests the issues log indicate whether the issues could impact material misstatement or conformance; for example, in this case, improperly accounting for missing data could result in a non-conformance even if the resulting discrepancy is not a material misstatement.

The verification report may include any other qualifying comments or findings during verification. It is important that the verification team does not provide consulting services to the operator in the verification report; however, identifying issues does not constitute consulting. For example, it is appropriate for the verification team to identity high-risk areas in the operator's GHG inventory program, but it may not be appropriate for the team to make specific recommendations on how to improve the inventory program. Recommending improvements is considered a medium or high conflict of interest, and must be disclosed to ARB as an emerging conflict of interest, as required in §95133(g).

CHAPTER 4: Monitoring and Measurement Issues

Chapter 4 provides verification guidance on common issues related to the monitoring and measurement requirements of the Regulation. It is not possible to address all issues a verifier may encounter; consequently, for issues not addressed in this chapter or other ARB guidance, verifiers should direct questions to ARB staff.

4.1 Missing Data

Section 95103(a)(8) of the Regulation requires operators to demonstrate every reasonable effort to obtain a fuel analytical data capture rate of 100% each year. Fuel analytical data is any data collected relating to the mass, volume, flow rate, carbon content, and heat content of a fuel used in emission calculations.

When evaluating missing data, verifiers should initially determine if the data is actually missing (i.e. not captured) or if it is stored in another location in the data management system or recoverable from another source. If the data is truly missing, the verifier may need to assess both the data capture rate, and the methods used to substitute missing data as part of conformance checks with the Regulation. ARB staff does not expect verifiers to evaluate conformance with data capture and missing data substitution requirements for all fuel parameters of every emission source. Rather, it is recommended that verifiers adopt a risk-based approach that focuses on sources identified in the sampling plan, sources that emerge during the verification process as potentially having missing data, and representative missing data substitution procedures to assess conformance with the Regulation and consistency among sources.

4.1.1 Fuel Analytical Data Capture Rate

To assess the analytical data capture rate of a parameter, a verifier may need to consider the actual captured data compared to the expected quantity of captured data based on regulatory requirements, and operational considerations. For example, if a source operated only six months out of the year, the capture rate would be determined relative to the six months of operation, not on an annual basis.

Next, verifiers will evaluate if the fuel analytical data capture rate is at least 80%. If so, then the source is still considered “verifiable,” and the verifiers will proceed to determine if the correct data substitution methods have been followed (see next section). If the capture rate for any fuel analytical data parameter is less than 80% and the source is not designated as *de minimis*, the source is considered “unverifiable,” resulting in a non-conformance.

4.1.2 Missing Data Substitution

<u>Less than 20% missing</u>: If less than 20% of the fuel analytical data is missing, and it is not being reported as *de minimis* or subject to the requirements of

40 CFR 60 or 75, the operator is required to substitute missing data with the mean of the year's captured data(§95103(a)(8)). Note that data is not considered to be captured when the associated equipment is not being operated; for example if zero values were recorded during a period when equipment was not operating, those values are not included in the mean. If the operator is using a CEMS to report emission, missing data must be handled using procedures described in
40 CFR 75 (§95103(a)(8)). In either case, when appropriate data substitution procedures have been followed, verifiers may assume that the substituted data is accurate and do not include any uncertainty in the assessment for material misstatement as long as the data used to calculate the missing data is accurate itself. If the accuracy of the captured data is in question, then any uncertainty must be carried over to the missing data calculations. For example, if a verifier discovers a systematic error affecting the captured data, the systematic error would also affect the mean of the captured data which is used to fill in missing data.

Greater than 20% missing: If a source is unverifiable due to >20% missing data, it still must be included in assessments for material misstatement. Material misstatement is assessed based on a facility's total emissions, and this source would still be included in the facility total. While this would result in an automatic non-conformance, it does not always result in a material misstatement.

The Regulation does not specify what method operators should follow for substituting the missing data when there is greater than 20% missing, but the method they follow will affect the uncertainty of the source's emissions. A verifier still needs to include uncertainty associated with the non-conformant source when evaluating for material misstatement. Verifiers should use professional judgment in determining how to evaluate missing data substitution for non-conformant sources. Some helpful techniques could include: analyzing the variability of captured data, investigating operational variability and load, back-calculating from other data, trending, engineering judgment, and conducting a bounding calculation of highest and lowest possible emissions for the source during the reporting year based on captured data. It is recommended that verifiers evaluate the impact on material misstatement using an approach analogous to Example 3 on measurement uncertainty in Chapter 3. Unless the verifier is able to state with reasonable assurance that the uncertainty in the reported emissions for the non-conformant source would not result in the total facility emission being outside the 95% accuracy required, the verifier would also indicate the presence of a material misstatement on the verification opinion.

Issues with data management systems: ARB staff recommends that verifiers also be aware of data management systems that automatically substitute values when a measurement is not taken; for example, by averaging related values or repeating the last captured value. Automatic data substitution using methods not described in the Regulation is not captured data and is considered missing data

under the Regulation. Captured data must involve actual measured values, not default values recorded by the data management system, such as repeating the last captured value. Verifiers will need to look very closely at underlying data because having a value present in a spreadsheet does not automatically imply that it is captured data. Data substituted using methods other than those described in §95103(a)(8) is a regulatory non-conformance that would need to be corrected in order to obtain a positive verification opinion.

4.2 *De Minimis* Sources

Emission sources designated *de minimis* may employ alternative estimation methods outside the Regulation for calculating emissions. There are several important considerations for verifiers regarding *de minimis* sources as set forth in §95103(a)(6). First, verifiers must be satisfied that the sum of all *de minimis* sources are below the threshold of 20,000 MT CO_2e and 3% of the total reported facility emissions, whichever is lower. In terms of conformance with the Regulation, verifiers must be reasonably assured that the *de minimis* sources do not exceed this threshold. Consequently, review of *de minimis* sources will require greater scrutiny when they are near the threshold. Bounding calculations based on estimated uncertainty may prove useful. Verifiers can review what data is available for the *de minimis* sources, and evaluate the sensitivity of calculations to changes in methodological assumptions. If uncertainty in the alternative estimation methodologies is such that a verifier is not reasonably assured that actual emissions fall below the threshold, the *de minimis* sources would need to be reclassified and follow regulatory methods. Otherwise the *de minimis* classification would result in a non-conformance.

Alternative methods are subject to verifier concurrence under the Regulation, and verifiers must be satisfied that alternative methodologies used to quantify emissions are appropriate and reasonable. Operators are given considerable discretion in identifying alternative methods; for example, engineering calculations may be employed and fuel use data does not need to meet the +/-5% accuracy requirement. Alternative methods must attempt to accurately estimate emissions, and not be biased toward over- or under-estimating emissions (§95103(a)(6). While verifiers may need to consider bounding calculations to ensure *de minimis* thresholds are not exceeded, the emphasis of the Regulation is on accurate reporting and *de minimis* sources should <u>not</u> deliberately be overestimated as a conservative approach. Any concerns that verifiers have with *de minimis* methods should be documented in the issues log; a non-conformance would result when the verifier cannot concur with the approach taken for *de minimis* sources, or the verifier does not have reasonable assurance that the threshold is not exceeded.

4.3 Measurement Accuracy

Section 95103(a)(9) requires that all fuel use data measurements (mass or volume flow) be quantified within +/-5% when used in emission calculations, and fuel use measurement devices must be maintained and calibrated in a manner

required to achieve this level of accuracy. Supplemental fuel use measurements not used in emissions calculations do not need to meet this accuracy requirement, and verifiers need not spend time assessing the accuracy of those measurement devices. Section 95103(a)(9) specifically requires that the operator employ procedures for fuel use measurement to achieve +/-5% accuracy. Thus, while fuel meters may be the most common type of fuel use measurement device, this requirement applies broadly to all procedures or devices that measure fuel use (mass or volume flow) when the data is used in emission calculations, including weigh scales and stock change measurements for solid, liquid, or gaseous fuels.

For the purposes of assessing fuel measurement accuracy for flow meters, a meter consists of everything up until the data enters an electronic data management system, including the measuring device itself, piping around the meter to ensure developed flow, pressure and temperature probes, electronic sensors or readouts, wiring or signals connecting to a data collection device, and any other equipment required to report the data within +/-5% accuracy at the standard temperatures and pressures listed in the Regulation.

When evaluating all flow meters, the following reviews may aid a verifier in assessing conformance with the Regulation:

1. Installation: Is the device installed according to original equipment manufacturer (OEM) specifications?
2. Measurement location: Is the measurement location appropriate? Is a meter that measures gas flow installed at a low point that may introduce error due to liquid in the gas stream?
3. Calibration and inspections: Does the frequency of calibrations and inspections meet OEM specifications?
4. Operating conditions: Is the flow measurement device designed to meet the required level of accuracy under the conditions (temperature and pressure) and the flow range for which it is used? Is the correct type of meter installed for the operating conditions? Is a meter designed for measuring gas flow being used to measure liquid flow?

For example, if a gas flow meter is designed to measure a pressure difference to a high degree of accuracy, but it does not measure and correct for temperature, a verifier would need to assess the effect of this on the meter's overall accuracy. Similarly, it would not be able to achieve the design accuracy if it is not installed in a location consistent with the original equipment manufacturer specifications, or if it is measuring flows at temperatures and pressures outside of its optimal design range.

4.3.1 Preparing for Review of Fuel Analytical Data Capture Instrumentation

It may be necessary for verifiers to evaluate fuel analytical data capture device accuracy for many different types of devices. Verifiers may want to consider requesting a piping and instrumentation diagram of all devices and emissions sources from the facility operator prior to the site visit. Based on this information, the verification team can organize data requests and prepare questions about each of the fuel analytical data capture devices before they arrive at the facility. The verifier may also choose to identify several key fuel analytical data capture devices for on-site inspection, and communicate this to the operator so that they can have qualified staff prepared to answer questions about these devices during the site visit. This in no way limits the verifier to reviewing only these pre-selected devices on the site visit and the verifier should feel free to examine any additional devices. This preparation will allow the verification team to be better organized and more efficient during the site visit. Verifiers may want to photograph meters as they view them to facilitate recall and conversation when back in the office. Always make sure photography is approved, especially flash photography, which may set off flame detectors at facilities. Alternatively, the verifier may request that the operator photograph selected meters prior to the site visit.

Communication near devices may be difficult or impossible due to excessive noise or other operating conditions. It may be advisable to discuss what the verifier is hoping to achieve by viewing this device before entering the area, and then wrap up any questions outside that area after viewing the device. A well-prepared verifier will have the ability to recognize which device is being viewed, even when communication with the operator is difficult and the facility is complex.

4.3.2 Orifice Flow Meters

Orifice meters used to measure gaseous flow volumes are the most common type of fuel meters found at refineries, and are frequently found in other sector such as at electricity generation and cogeneration facilities combusting natural gas or associated gas. The meter consists of several components: the orifice plate itself in a flange assembly, the upstream and downstream piping, flow conditioners (if present), a device for recording the differential pressure, a device for measuring temperature (if present), and a device for measuring static pressure. The flow rate is calculated from the differential pressure and reported at one of the standard temperature and pressure conditions found in the Regulation. The equations employed contain a variety of parameters that are empirically determined, measured, or supplied. Placement of the meter to ensure fully developed flow is critical to the accuracy of the meter. The U.S. EPA Mandatory Reporting Rule (40 CFR 86, 87, 89) required the “calibration” of orifice meters prior to April 1, 2010 (40 CFR 98.3(1)((3)) with some exceptions. The verifier may want to request this data and evaluate it when considering the accuracy of data.

The operator must prove to the verifier's satisfaction that the measured fuel use data from the meter meets the Regulation's +/-5% accuracy requirement when the data is being used in emissions calculations. Showing that the differential pressure transmitter/transducer is installed and calibrated correctly is not sufficient to show that the meter is within the accuracy required by the Regulation. If there are no original equipment manufacturer (OEM) guidelines available for installation and calibration and maintenance intervals, the verifier can look at generally accepted industry guidance from sources such as API, ISO, and ASTM to determine if the meter is installed correctly and a reasonable frequency of calibration and maintenance to maintain the meter accuracy required by the Regulation. The EPA Mandatory Reporting of Greenhouse Gases Rule is also a good source of information regarding methods to quantify the accuracy of an orifice meter. In many cases, the verifier will also find that the total pressure and temperature probes are not located in close proximity to the orifice meter. The operator must demonstrate to the verifier's satisfaction that using these measurements at a remote location does not adversely affect meter accuracy.

If a meter does not exactly conform to the specification from the OEM, API, ASTM, ISO, etc. this does not automatically indicate that the meter is not in conformance with the Regulation. The verifier will need to also be open to accepting evidence of accuracy that is not necessarily spelled out in the sources listed above. If evidence exists from a peer-reviewed journal article, a strap-on ultrasonic flow meter (verifiable to 5% accuracy) that correlates well with the installed meter, engineering calculation, or any other methodology the verifier finds reasonable indicates that the orifice meter is within the 5% accuracy requirement of the Regulation, the method would be acceptable. This includes an engineering assessment that relates power production to fuel usage that can be shown to be accurate to within +/-5%. The verifier is encouraged to contact ARB if any further clarification is needed.

If the operator is unable to provide enough evidence to convince the verifier (with reasonable assurance) that the entire flow measurement device results in a reading that is within 5% of the actual value, there would be a nonconformance. There is no exception to allow a facility to replace the meter at their earliest convenience; the verifier must impartially assess conformance for data collected in the emissions data report under review (§95103(b)). Corrective actions would be handled by ARB.

4.3.3 Solid Fuels

Unless solid fuel use is *de minimis*, solid fuel measurements must meet the same +/-5% accuracy requirements as all other fuels. To determine solid fuel use accuracy, verifiers may need to look at belt and conveyer scale OEM accuracy specifications and calibration and maintenance requirements. Operators must calibrate belt and conveyer scales at least quarterly. The operator must be able to provide documentation that the belt or conveyer scales is capable of meeting

the accuracy requirements and maintained in a manner to reasonably assure that accuracy is preserved (§95103(a)(9)). If belt and conveyer scales are not used, the operator must quantify solids fuels by another method of sufficient accuracy such as gate scales, weight tickets and/or fuel pile surveys. If gate scales are used, the verifier should be assured of the accuracy of the scales. Similar to belt and conveyer scales, this would involve determining the gate scale's OEM accuracy specifications and maintenance and calibration requirements to determine if they meet the +/-5% accuracy requirements. If weigh tickets are used, the tickets can be assumed to meet the accuracy requirements of the Regulation. For fuel pile surveys, the method should be well documented and capable of reasonably assuring at least 5% accuracy. An ASTM Method is one method that would be considered acceptable. The equation in §95115(a)(2)(A) can then be used to calculate solid fuel use. As specified in §95115(a)(2)(A), solid fuels must be reported in units of short tons for non-biomass based solids and bone-dry short tons for biomass derived fuels. Verifiers must ensure operators have not reported in any other units, including metric tonnes.

When determining fuel specific HHV or carbon content (under §95125(c)(1) or §95125(d)(1)), the operator must collect weekly samples of equal mass that are combined into a monthly composite sample and well mixed before analysis. Verifiers should look at documentation of the sampling procedure to ensure it avoids bias, and that samples are taken appropriately. Where the Regulation specifies an ASTM methodology for determination of HHV or carbon content, the operator must use this method, or a revised and updated equivalent version of the ASTM method; when no method is specified, the verifier should ensure the method is reasonable and meets the Regulation requirements for accuracy.

If the operator is using §95125(h) to calculate solid fuel emissions from biomass, municipal solid waste, or waste-derived fuels, the Regulation does not specify a methodology for measuring steam generation, nor is there a specified accuracy requirement for steam flow measurement. However, the verifier must find this methodology reasonable, and any uncertainties should be considered when assessing for material misstatement. Section 95125(h) may place additional requirements on operators combusting less than pure biomass to determine the biomass-derived portion of emissions. The verifier must determine if the operator has followed the regulatory provisions in §95125(h)(2) and ASTM appropriately. If the operator has chosen to use a source specific emission factor, the verifier must determine that an ARB approved source test plan is in place and the emission factor is updated annually.

4.4 Continuous Emissions Monitoring Systems

For most combustion and process emission sources, operators are given the option to report CO_2 emissions using continuous emissions monitoring systems (CEMS) as specified in §95125(g). The methods in this section rely heavily upon existing US EPA requirements for the operation of CEMS in 40 CFR Parts 60 and 75, and verifiers are responsible for assessing conformance of CEMS with

the applicable requirements referenced in US EPA rules. Verifiers must keep in mind that Part 75 includes options for fuel-based methods for CO_2 calculations, but for the purposes of ARB reporting, §95111(c) indicates that these methods would only be followed by generation facilities subject to Part 75 who already report CO_2 to EPA using Part 75 fuel-based methods.

CEMS are complex systems that have the potential to collect very accurate emissions data based on measurements of flue gas concentrations of O_2 or CO_2 along with flow rate measurements to derive continuous (hourly) CO_2 mass measurements. CEMS generally consist of a package of gas analyzers, sample probe, and monitors for flow, opacity, and temperature integrated into a common system. Verifiers should never assume that GHG emissions data derived from CEMS is inherently accurate; emissions sources monitored with CEMS often tend to be 'higher risk' due to the complexity of data collection and calculation procedures. CEMS also tend to be utilized by larger stationary or process emission sources rather than smaller dispersed sources.

Section 95125(g)(b)(1) requires existing CEMS to be operated in accordance with 40 CFR Part 60 or 75, and must calculate CO_2 emissions following methods in Part 75, Appendix F. Further, §95125(g)(7) requires new CEMS to be installed and operated in accordance with 40 CFR Part 75 requirements. Evaluation of conformance with the relevant requirements in Parts 60 and/or Part 75 is included within the scope of verification services and informs the verification opinion.

<u>Initial Certification</u>: Part 75 includes detailed requirements about the initial certification of CEMS systems. ARB does not expect verifiers to review that initial certification requirements have been completed for existing CEMS that have been permitted by an air district. Evidence that the CEMS has been approved and permitted by a local air district is sufficient. However, new CEMS installed specifically to monitor CO_2 emissions for this Regulation would not necessarily have been certified by a local air district, so verifiers should not assume that initial tests and certification have been conducted. In this case, verifiers may need to review documentation that the initial tests and certification required by Part 75 have been conducted appropriately. These tests include, but are not limited to, a 7-day calibration test and relative accuracy test audit (RATA) for each monitor, a linearity check and cycle time test for each pollutant concentration monitor, and a bias test and daily interference test for each flow monitor.

<u>Ongoing Calibration and Maintenance</u>: Verifiers may need to review documentation to ensure CEMS have been operated and maintained in conformance with relevant 40 CFR Part 60 or 75 requirements. Failure to do so would constitute a non-conformance with the Regulation, as well as call into question the accuracy of any CEMS emissions data. Each CEMS is required under Part 75 to have a documented QA/QC Plan that specifies the types of

ongoing maintenance and testing that must be conducted. ARB staff does not expect verifiers to check if every test has been conducted; rather, it would be appropriate for verifiers to review the QA/QC plan and review some evidence that ongoing testing is being conducted in accordance with the plan. Ongoing CEMS requirements in Part 75 include, but are not limited to, daily calibration error tests, daily interference tests, quarterly linearity checks for gas meters, and annual or semi-annual RATA and bias testing.

Biomass-derived and waste-derived fuels: If biomass-derived fuel is combusted and O_2 concentrations are used, verifiers may need to evaluate if annual source testing has been conducted that demonstrates calculated CO_2 concentrations meet the RATA requirements in 40 CFR Part 60, Appendix B: Performance Specification 3, when compared to measured CO_2 concentrations. If the operator combusts municipal solid waste or other waste derived fuels, the verifier must ensure that CEMS calculations are based on measured CO_2 (not O_2) concentrations (§95125(g)(2)). In general the Regulation requires non-standard fuels, such as any fuel mixtures that include municipal solid waste or refinery fuel gas, to measure CO_2 concentrations because these fuels can be variable in composition and reliable factors for converting O_2 measurements to CO_2 emissions do not exist. Also for waste-derived fuels, verifiers may need to assess if biomass fractions were determined quarterly using the ASTM method in 95125(h)(2) except where explicitly exempt in cases where the biomass fraction is pure (>97%), very small (<5%), or the waste-derived fuels are <30% of a fuel mixture.

Additional guidance on the CEMS provisions of 40 CFR Part 75 is available at the US EPA webpage:

Part 75 Emissions Monitoring Policy Manual:
http://www.epa.gov/airmarkets/emissions/monitoring.html

Plain English Guide to Part 75:
http://www.epa.gov/airmarkets/emissions/rules.html

CHAPTER 5: Completing the Verification Process

5.1 Finalization

To complete verification services, a final meeting may be held with the operator to review the findings and the detailed verification report. Because the independent technical reviewer may request that the verification team conduct further investigations, the verification team may wait to have the final exit meeting after the independent reviewer has concurred with the findings and conclusions detailed in the verification report. If a dispute arises between the operator and the verification team regarding the verification opinion, there is a process for ARB to arbitrate. The final verification opinion must be submitted to ARB and the operator by the verification deadline.

5.2 Independent Technical Review

Before a verification opinion can be issued, §95131(c)(1) indicates that an ARB accredited lead verifier that has not been involved in the verification services under review must independently review the work of the verification team. The independent technical review serves as a final check on the verification team's work to identify any significant concerns related to the draft verification opinion, and as a way to manage the verification body's business risk associated with providing verification services. The independent reviewer must be employed by the verification body.

The independent reviewer is the final check on identifying errors in planning, data sampling, and judgments by the verification team. The independent reviewer will need to review documents relevant to the verification services provided, and identify any failure to comply with ARB rules or with the verification body's internal policies and procedures for providing verification services. The independent reviewer must concur with the verification findings before the verification opinion can be issued (§95131(c)(1)).

If the independent reviewer does not feel that some aspects of the verification have been conducted adequately or completely, or has unresolved questions about some of the findings, the reviewer cannot sign off on the verification opinion until these issues are resolved to his or her satisfaction. The level of response needed by the verification team will depend on the type of issue identified. The lead verifier may be able to address minor issues through further discussions with the independent reviewer or by providing more detailed documentation or explanations in the verification report. On the other hand, if significant gaps in the verification services are identified, such as insufficient sampling or data checks, the verification team will need to conduct further technical work.

The independent reviewer is allowed to be involved in drafting a proposal or contract to conduct verification services, the initial project scoping and the contract negotiating. However, the independent reviewer must not take part in

any of the verification activities such as developing the sampling plan or conducting the site visit (§95131(c)(1)). The independent reviewer may choose to conduct a site visit independent of the verification team if that is deemed necessary.

The lead verifier may also request to have the independent reviewer evaluate the sampling plan and proposed data checks early in the verification process. An intermediate technical review step could save the verification team time and resources by identifying critical issues such as gaps in the proposed verification services or an insufficient sample size before the end of the verification. The independent reviewer must still maintain independence from the verification by not making specific recommendations about how the verification services should be conducted. It is not appropriate for the independent reviewer to suggest a sampling size is too large, or to interfere with the way the lead verifier manages verification services. The independent reviewer must still conduct a full review of all the verification services prior to the issuance of the final verification opinion.

5.3 Verification Opinion

Section 95131(c) requires that the verification opinion include a determination by the verification body (the lead verifier and the independent reviewer) on whether the emissions data report submitted by the facility operator conforms to the requirements of the Regulation, and whether the data is free of material misstatement. A verification body must make both determinations, even if an adverse opinion is inevitable. For example, if a facility has missing data >20% for a source that will result in an adverse opinion, the verification team must still assess conformance for other sources at the facility and assess whether the total reported emissions are within 95% accuracy.

For a positive verification opinion, an emissions data report must:

- Be free of material misstatement, and
- Conform to all requirements of the mandatory reporting Regulation. (See §95131(c)(2)(B)).

An emissions data report will receive an adverse verification opinion if the verification team does <u>not</u> have reasonable assurance that either:

- the report is free of material misstatement in reported emissions;
- the report conforms to all requirements of the Regulation (i.e. contains one or more non-conformances with the Regulation); or
- the report is not free of material misstatement of reported emissions and does not conform to the requirements of the Regulation. (See §95131(c)(2)(B)).

<u>Note</u>: The phrasing of the verification opinion and the requirements of the regulation are important in terms of where the burden of proof lies. A verification

team must have reasonable assurance that an emissions data report is *free* of material misstatement, not that the report contains a material misstatement. In other words, if there is uncertainty as to whether or not there is a material misstatement in emissions, the verifier's default assumption must be that the report is *not* free of material misstatement. The lead verifier would be attesting that based on their investigations, they do not have sufficient evidence to be reasonably assured that the report is free of material misstatement.

Situations that will result in a positive or adverse verification opinion are summarized in Table 5-1.

Table 5-1 Verification Opinions

	Free of Material Misstatement?	Conforms to the Regulation?	Verification Opinion
Case 1	**Yes**	**Yes**	**Positive**
Case 2	Yes	No	Adverse
Case 3	No	Yes	Adverse
Case 4	No	No	Adverse

ARB has made available a verification opinion form that verification bodies may use when providing a verification opinion to the operator and ARB. There is room for the verifier to make qualifying comments on the verification opinion form. For example, the lead verifier could describe any problems associated with the verification that may help ARB staff understand the issues, and could document the cause of any non-conformances. Because of the range of seriousness regarding adverse opinions, the lead verifier is encouraged to include as much relevant information as deemed necessary for purposes of explaining an adverse opinion.

5.4 Petition Process

If the verification team finds that a verification opinion will be adverse, §95131(c)(3) requires that they formally provide the operator with at least 10 working days to modify the emissions data report. Most, but not all, issues that would result in an adverse opinion can be corrected if the operator works proactively to address them. Verifiers will need to keep the 10-day window in mind when planning their verification services as the verification deadlines are fixed and no extensions are possible. The final emissions data report must still be submitted by the verification deadline.

In the event that the verification body and the operator disagree about an adverse verification opinion, the operator may petition to the ARB Executive Officer to make a final decision, as required by §95131(c)(3)(A). This petition must be made to ARB before the verification opinion is submitted. ARB will then objectively evaluate the situation and relevant evidence, and make a final determination regarding the verification opinion. Both the verification body and

the operator need to cooperate with the Executive Officer to arrive at a final decision. If the Executive Officer finds that the emissions data report does not meet the requirements of the Regulation, §95131(c)(3)(B) provides the operator with 30 days to make any final revisions and re-submit the report. The report must then be re-verified, subject to the same provisions regarding verification opinions in the Regulation. If the Executive Officer finds that the emissions data report does not meet the standards and requirements specified in the regulation, it might not always be possible to correct the underlying problems. In this case, the operator may choose not to take the extra 30 days to correct the report, and the final opinion can be submitted as adverse.

However, when there are situations when assistance is needed before the end of the verification process, verifiers and operators should not hesitate to contact ARB verification staff. This may help address situations early on to avoid the need for formal dispute resolution. Neither the facility operator nor the verification team should wait until the last minute to seek guidance or assistance from ARB staff.

5.5 Completion and Issuance of Opinion

ARB's provides a verification opinion form that both the lead verifier and independent reviewer to can use to attest to their findings and provide their signature before submitting it to ARB. The information must not be submitted to ARB until after the completion of all verification services, after any final meetings with the operator, and if applicable, after the operator has had at least 10 working days to address any issues that will result in an adverse opinion. The Users Guide (http://www.arb.ca.gov/cc/reporting/ghg-rep/ghgtoolusersguide.pdf) has instructions on attaching the verification opinion form via the Reporting Tool.

In addition to completing the form, which allows the verification body to separately indicate if there is material misstatement and conformance, as well as the opinion (positive or adverse), the Reporting Tool also requires the verifier to choose a finding using a drop-down menu (either positive or adverse). That means the positive or adverse verification opinion will be entered both on the paper form, and in the Reporting Tool.

After submitting the verification opinion to ARB, it is good practice for verification bodies to inform the operator that verification services have been completed. ARB staff recommends that operators that intend to rehire their verification body for the next year should renew the contract with that verification body as soon as practicable. This allows the staff of the verification body to plan an itinerary of verification services for the following year, which helps the verification body to manage their time and resources, and may reduce costs for both the verification body and the operator.

CHAPTER 6: Air Resources Board Oversight

ARB assumes full responsibility for the implementation and enforcement of the Regulation. Therefore, ARB will have full oversight of all facets of the program. This oversight spans from COI review to dispute resolutions and audits of both the facility operator and the verification body.

6.1 Conflict of Interest

Upon submission of COI/NOVS forms, ARB reviews each one separately. ARB will track relationships between verification bodies and individual verifiers with operators.

In the case where a verification body, verifier or operator knowingly or accidentally holds back information that could potentially create a conflict, and this information is discovered at a later date, the Executive Officer may choose to set aside the verification opinion (§95133(g)(4)). This would also require the operator to get a new verification for that emissions data report. Additionally, depending on the scope of the conflict, the accreditation of the verification body and the individual verifier may be revoked (§95132(d)).

6.2 Audits

Pursuant to §95105 and 95131(g), ARB can choose to audit any verification at any time during the verification process, including all site visits, and relevant verification materials. Audits associated with the verification program should not be viewed as adversarial; the purpose of auditing is for ARB to monitor and oversee functioning of the mandatory reporting and verification program, and to ensure quality, rigor and consistency across verification bodies.

Any time ARB chooses to audit a verification, both the operator and verifier will be notified by the staff leading the audit. An initial statement will be provided to both parties, detailing the level of the audit, as well as any requests for information. Following the completion of an audit, ARB staff will provide the verification body with written feedback concerning any areas for improvement or non-conformances identified during the audit.

6.3 Issues

Often, issues arise on which the operator and verifier do not agree. Both parties are encouraged to work together to find a solution. Alternately, both parties can approach ARB for guidance in finding a solution in a collaborative effort. In the absence of this, ARB's Executive Officer will act as arbiter, and makes the final decision. For more information regarding the petition process, see §95131(c)(3) of the Regulation.

Appendix A Sectors

1. Electricity Generation

Regulatory Requirements

Verifiers that provide verification services to electricity generation facilities should be familiar with §95111 of the Regulation. A sector specialist is not required to perform verification services for electricity generation facilities.

Supplemental Verification Guidance

Electricity Generation - "Net power generated" means the gross generation minus station service or generating unit service power requirements (also known as parasitic load), expressed in megawatt hours (MWh) per year. It includes power sold to the grid (or a specified user) as well as on-site consumption of electricity for production processes, but should not include parasitic loss (power required to keep system operating). In the case of cogeneration, net power generated includes on-site consumption of electricity for the purpose of a production process, power provided directly to end users, as well as wholesale power provided to the grid. An engineering estimate of station service or generating unit service power requirements is acceptable and does not need to meet the +/-5% accuracy requirement.

Net power generation is used for evaluating the efficiency of generating units. Net power generation is intended to include only the unit service power requirements during the time when the unit is generating power. For generating facilities with a low capacity factor (Note: capacity factor is the ratio of the electrical energy produced by a generating unit for the period of time considered to the electrical energy that could have been produced at continuous full power operation during the same period.), whose total station service power requirement is greater than total generation for the year due (e.g. at a peaker plant), operators are strongly encouraged to not report a negative net generation number. Instead, we ask the operators to exclude from net power generation the power requirements during unit downtime or unit standby. An engineering estimate of the excluded power requirement is acceptable. However, reporting a negative net generation does not constitute a nonconformance under the current GHG reporting regulation. However, operators and verifiers should be aware of any changes to the definition in the proposed revisions to the Mandatory GHG Reporting Regulation (http://www.arb.ca.gov/regact/2010/ghg2010/ghg2010.htm).

Engineering Estimation of Parasitic Load – If a facility does not directly measure both gross generation and net generation, and parasitic load is also not directly measured, facility operators may use engineering principles to estimate parasitic load. Parasitic load is the sum of energy use of the auxiliary equipment that supports the electricity generation process, and these may include fans, pumps, drive motors, pollution control equipment, lighting, and other equipment. Satisfactory parasitic load quantification is either (a) a direct measurement of the energy used by the auxiliary

equipment, (b) an engineering estimation based on an energy audit of the specific electricity generation system, or (c) an energy consumption accounting calculation to estimate the energy needs of each auxiliary equipment based on their physical specifications. The facility operator needs to demonstrate the reasonableness of the parasitic load estimate to the verifier.

Process Emissions from Acid Gas Scrubbing is likely to be a small source of emissions. The operator is not responsible for measuring the average molecular weight of the sorbent material and can use the estimated value from the supplier. The verifier may want to simply ensure that the determination of the sorbent content is reasonable.

Spinning (and Supplemental) Reserve Capacity – It is recommended that verifiers ensure that all fuel burned by electricity generation systems, including fuel burned for the purpose of providing reserve capacity, is attributed to electrical generation, regardless of whether power was generated at these times. Cogeneration systems should include this fuel use in their distributed emissions calculation.

---

2. Cogeneration

Regulatory Requirements

Verifiers that provide verification services to cogeneration facilities should be familiar with §95112 of the regulation. A sector specialist is not required to perform verification services for cogeneration facilities. *However, cogeneration facilities can be complex, and ARB strongly recommends using an accredited verifier on the verification team who has cogeneration experience.*

Supplemental Verification Guidance

The following section provides additional information for verifiers providing verification services for cogeneration facilities.

Instructional Guidance for the Reporting Regulation for Cogeneration Facilities can be found at: http://www.arb.ca.gov/cc/reporting/ghg-rep/ghg-rep-guid/09_Cogen.pdf.

Although cogeneration does not require special sector verification accreditation like cement plants, refineries and power entities, it is highly recommended that the verifier have experience with power generation and cogeneration. These systems are often complex, and may require substantial expertise when reviewing the distributed emissions calculations. Both topping cycle and bottoming cycle cogeneration systems may be complex and challenging from a verification perspective.

Abbreviated Data Report – If an abbreviated report has been submitted for a cogeneration facility, the verifier may need to ensure that the facility:

- is not primarily an electricity generating facility;
- is a self-generation facility;
- has a nameplate capacity less than 10 MW;
- has stationary combustion emissions less than 25,000 MT CO_2.

An abbreviated report from a facility that does not meet the above criteria would result in a non-conformance adverse verification opinion from the verifier unless the operator updates the emissions data report and provides a full report as required in §95112.

For thermal energy production, a verifier may accept an engineering calculation in lieu of a measured energy value if the operator demonstrates that (1) it is not possible to measure thermal energy from the source or (2) the calculated value is more accurate than a measured value, such as input steam to a steam turbine.

For bottoming cycle cogeneration systems, emissions are distributed to manufactured product outputs. That means the verifier will have to understand the manufacturing process in order to be able to evaluate the distributed emissions calculation. If the facility emits less than 25,000 MT CO_2, only emissions associated with power generation or the manufactured product are reported - other sources may be reported as optional in the emissions data report. It will be important for the verifier to understand which sources are being attributed to the manufactured product, and which may not be reported, in order to verify the emissions report.

Cogeneration System – Because of the complexity of cogeneration systems, the verifier may want to request a piping/process and instrumentation diagram (P&ID) or an energy flow schematic diagram that clearly shows all fuels and energy information relevant to the Regulation. The verifier is encouraged to request this information early in the verification process so it is available for review before the site visit.

When verifying a cogeneration system, verifiers should check that the cogeneration facility actually meets the criteria for cogeneration. By definition, a cogeneration system must recover heat that would otherwise be wasted and utilize the heat for some useful purposes. Some electricity generation facilities that also generate steam do not utilize waste heat for steam generation, and these facilities should not be categorized as cogeneration. Verifiers should let ARB staff know when they see these cases.

Default efficiency factor – If a default efficiency factor is used for electricity generation or thermal energy production, it is recommended that the verifier ask the operator why it was not possible to report a site-specific factor. The Regulation requires a site-specific factor to be reported if measured.

Consumed on-site— Reporting of electricity consumed on-site [95112(a)(3)(C)] refers to electricity generated by the cogeneration system and consumed on-site by other industrial processes other than electricity generation. Grid electricity consumed is reported in kWh as electricity usage [§95112(a)(6)]. Electricity consumed on-site is the difference between net electricity generated and electricity provided or sold off-site. It excludes station service power requirement for the cogeneration system and any electricity acquired from off-site (either from the grid or from another facility).

Reporting of thermal energy consumed on-site [§95112(a)(4)(A)(2)] refers to thermal energy generated on-site and consumed by other on-site industrial processes other than power generation. This quantity should not include steam used for power augmentation or NOx control, sent to a de-aerator, sent to a cooling tower, or vented.

Useful thermal output refers to thermal energy made available for use in any industrial or commercial process, heating or cooling application, or delivered to other end users, i.e., total thermal energy made available for processes and applications other than electrical generation (see §95102(198) for definition). Steam used for power augmentation or NOx control, sent to a de-aerator, or sent to a cooling tower is not considered useful thermal energy. Also, this quantity should exclude thermal energy that is vented, discharged, or wasted before it is made available to processes and applications. Examples of such waste may include steam vented immediately after it was produced from the cogeneration unit but never reached any industrial process, and hot water discharged during warmer seasons due to lack of demand for heating application. However, thermal energy wasted after it has been utilized does not need to be subtracted from useful thermal output. Examples of such waste may include energy loss at the condenser, and steam vented between two industrial or commercial processes that sequentially utilize the steam/condensate in a series.

Subtracting the enthalpy in the returned condensate and make-up water is preferable, but either including or excluding the condensate enthalpy conforms under the current regulation. However, operators and verifiers should be aware of any changes to the definition in the proposed revisions to the Mandatory GHG Reporting Regulation (see http://www.arb.ca.gov/regact/2010/ghg2010/ghg2010.htm).

Furthermore, Useful Thermal Output includes only steam generated by equipment that is a part of the cogeneration system. For a facility with a cogeneration system and a backup boiler, whose steam generated is not used for electricity generation, the steam from the backup boiler should be excluded from Useful Thermal Output. That is because the backup boiler is not an integrated part of the cogeneration system.

Backup boilers can be used to provide steam to a thermal host when the cogeneration system is not able to fulfill a contract (and not permitted as emergency standby by the local air district), is reported as a stationary combustion source, but is not included in the distribution of emissions, nor included as a source of electrical generation.

3. Cement

Regulatory Requirements

At least one member of the verification team providing verification services to a cement plant operator must be an ARB-accredited cement plant specialist. To become an accredited cement specialist, an individual must meet the requirements in §95132.

Supplemental Verification Guidance

The following questions may assist the verifier to assess if all the emissions data has been included in the emissions data report:

1. Does the report include GHGs emissions by gas type (CO_2, CH_4, and N_2O) for the entire facility, and GHG emissions produced for each fuel type?
2. Are all process emissions included?
3. Are fugitive emissions included?
4. Is fuel consumption reported separately by fuel type and by process unit (or groups of units) where separately metered?
5. Is all fuel consumed by stationary combustion sources reported?
6. Is fuel consumption reported separately for kiln and non-kiln fuel use?
7. Is fuel for mobile sources or portable equipment reported separately as optional (not supplemental or summed)?
8. Is TOC content reported? Are all of the clinker inputs included (metric tonnes/year)? Was the correct default factor used (0.2 percent)?
9. Are CO_2 from biomass combustion separately identified and reported? Are kiln and non-kiln CO_2 biomass emissions reported separately?
10. Was the efficiency metric correctly calculated? CO_2 emissions from mobile combustion sources or purchased electricity, steam, or heat should not be included. The efficiency metrics should only include activities and products from that calendar year.

These questions are a starting point to begin gathering information. The cement plant sector specialist may work with the lead verifier to develop the verification and sampling plan, and determine what actions and interviews will take place during the site visit.

In some cases, a site visit to a cement plant may not be very productive for document review because the data is stored at a central organization or corporate

headquarters. ARB staff recommends that the verifier determine in advance of the site visit where the data resides, and plan accordingly.

Verification requires the facility operator to disclosure to the verifier sensitive business information, like cement composition. The lead verifier may contact ARB if an operator is unwilling to share pertinent information with the verifier.

Stationary Combustion Emissions – It may be common for cement plants to calculate low heating values (LHV) for fuel, rather than high heating values (HHV). The verifier must determine if this calculation is done correctly, if applicable.

Process Emissions – Process emissions can be larger than stationary combustion emissions. However, the total emissions are roughly equal to the amount of clinker or cementitious product produced for that year, on a mass-to-mass basis.
In addition, if the facility uses CEMS to report stationary and process emissions from the kiln, the operator may report process emissions using the clinker-based method and TOC content in raw material, but must then also identify those emissions as "supplemental" in the emissions data report. This avoids double-counting process emissions. Regulation §95125(g)(5) allows CEMS to be used in lieu of the clinker-based method and TOC content for estimating process emissions.

Companies are currently not allowed to use a site-specific TOC content emission factor even though TOC content may be highly variable if a company consumes substantial volumes of shale or fly ash as raw materials entering the kiln.
Cement plants may differentiate between bypass dust and cement kiln dust (CKD) for purposes of material handling and accounting. Because the amounts of these materials are generally small, verifiers may want to focus on other aspects of the emissions data report. Bypass dust is usually fully calcinated, and the verifier may accept this in the calculation of process CO_2 emissions from clinker production using the clinker emission factor.

Efficiency metrics – Other information, including an efficiency metric for clinker and cementitious product, is required to be reported and subject to verifier review. The verifier may want to compare the reported metric for the facility with the metrics reported for the other cement plants in California. As a rule of thumb, the efficiency metric is on the order of 0.7 to 1.1, depending on the individual facility. Efficiency metrics outside of this range may need additional scrutiny by the verification team.

Verifiers should determine if the method used by the operator for estimating the amount (mass) of clinker and clinker substitutes (used to manufacture cement) is reasonable. Although the level of accuracy of this measurement is not explicitly defined in the Regulation (e.g. +/-5% for fuel usage for calculating emissions), the verifier should contact ARB staff if the estimation method is not reasonable to the satisfaction of the verifier.

Because clinker can be stockpiled and then used in future reporting years, the cement efficiency metrics (for clinker and cementitious product) may vary from year

to year. The Regulation specifies that the annual mass of clinker consumed for that year should be used in the efficiency metric calculation (§95110(e)). Verifiers should ensure the efficiency metrics only include activities and products from that calendar year, and that the metrics do not take into account emissions from production from a previous year's inventory.

---

4. Refinery

Regulatory Requirements

At least one member of the verification team providing verification services to a refinery plant operator must be an ARB-accredited refinery and hydrogen plant specialist. To become an accredited refinery and hydrogen plant specialist, an individual must meet the requirements in §95132.

Supplemental Verification Guidance

In addition to documents listed in the Verification Guidance, there are a number of documents specific to petroleum refineries and hydrogen plants that may prove useful to verifiers in assessing conformance with the Regulation. Verifiers may need to use professional judgment in determining the subset of documents to review, and the extent to which the documents are reviewed. Table A-4.1 provides a list of suggested documents that may be useful for verifiers to review for the refinery sector.

Table A-4.1 Suggested Document Reviews for Refinery Sector

Activity or Emission Source	Document
Emissions Source Inventory	• Facility permits • Facility plans • Process flow diagrams • Piping and instrumentation diagrams • Air emission inventory reports (AB2588) • EPA Title V reports
Combustion	• Refinery fuel gas analysis[1] • Fuel mixtures analysis • Low Btu gases analysis • Data acquisition and handling system reports • Flow meter calibration and maintenance records • Utility bills • CEMS records • Relative accuracy test audit (RATA) results • Bias adjustment factor (if any) applied to CEMS data
Continuous Catalytic Cracking	• CEMS records • Relative accuracy test audit (RATA) results • Bias adjustment factor (if any) applied to CEMS data • Daily records of average coke burn rate • Data acquisition and handling system report • Methodology and frequency of carbon fraction determination • Flow meter calibration and maintenance records • Gas compositional analysis
Other Catalyst Regeneration	• Records of catalyst mass regenerated • Records of weight fraction of carbon on spent and regenerated catalyst – methodologies and frequencies • Records of the number of annual regenerations • Records of annual hours of operation

[1] RFG analysis documentation will potentially include high heat value, carbon content, composition, and molecular weight data, and will vary depending upon the source of data – inline analyzer, onsite lab, or offsite lab.

Process Vents	• Records of control device operation • Records of vent release rate • Records of vent durations • Records of number of vents • Gas compositional analysis
Asphalt Blowing	• Local AQMD/APCD reporting/requirements • Records of control device operation • Records of mass of asphalt blown
Sulfur Recovery	• Records of gas volumes sent to sulfur recovery • Flow meter calibration and maintenance records • ARB approval of source test plan • Gas compositional analysis data • Records of control device operation
Wastewater Treatment	• Selection of methane correction fraction • Chemical oxygen demand analysis – methodologies and sampling location • Records of volume of wastewater treated • Records of volume of sludge removed • Total nitrogen in wastewater data • Records of control device operation
Oil-Water Separators	• Records of volume of wastewater treated • Records of control device operation
Storage Tanks	• U.S. EPA TANKS input and output data • ARB approval of headspace gas composition analysis • Records of control device operation
Gas Service Components	• AQMD/APCD leak detection and repair (LDAR) procedures • CAPCOA component identification and counting methodologies • Records that refinery has extended gas service component screening to include all components containing natural gas, refinery fuel gas, and low Btu gases • Component screening data

Flaring	• Local AQMD reporting/requirements • Records of manufacture data – combustion efficiency • Gas compositional analysis data • Refinery throughput • Emission factor used
Electrical Generating Units	• See guidance – confirm operational control
Cogeneration Systems	• See guidance – confirm operational control
Indirect Electricity Purchases	• Utility bills
Hydrogen Plants	• Fuel and feedstock flow meter records[2] • Carbon content analysis records • Utility bills • CO_2 and CO sales records • Air district permit • Confirmation of operational control

The verifier is required to review the operator's reported emission source inventory and determine that all required emission sources have been reported (§95131(b((4)((A)). Refineries are extremely complex facilities. As such, access to facility plans, process diagrams, APCD/AQMD permits, EPA Title V permits, and emission reports submitted to the local APCD/AQMD and EPA are valuable data sources to examine for identifying all emission sources. The site visit is also critical for indentifying all sources and evaluating any potential conformity issues. A visual inspection of sources including flow meter location, sampling ports, and other information relevant to the specific emissions source will aid in the verification process. This is also an opportunity to speak with the source operators and process engineers who are the people most familiar with the emissions sources.

Refinery Fuel Gas – RFG is a significant source of emissions and subject to compositional variation. There are three options for calculation emissions for RFG: 1) CEMS, 2) carbon content testing, and 3) system specific CO_2 emission factor. Refineries often have multiple RFG systems, and the verifier must review all systems to confirm that each fuel stream is measured and calculated correctly.

[2] Note that RFG and natural gas can be both a fuel and a feedstock

1) CEMS (refer to Verification Guidance chapter 4.4)

2) The carbon content testing method is described in §95125(d). Refiners must determine refinery fuel gas carbon content a minimum of three times per day (every eight hours). The verifier must determine that the thrice-daily sampling requirement has been met, the correct methodologies were used (ASTM D1945-03 or ASTM D1946-90 (2006)) for the determination of carbon content, and that sampling and measurement location are appropriate and avoid bias. Determination of carbon content may be done onsite or by an offsite lab. The verifier must assess the expertise of the lab/technician providing the results as they are part of the personnel providing data to support the emissions data report. Additionally, if inline or onsite gas chromatograph analysis is occurring, ARB staff recommends that the verifier examine the installation, calibration, and maintenance documents for the gas chromatograph. Any uncertainty in the methods will be carried over to the assessment for material misstatement.

3) The system specific CO_2 emission factor method is described in §95125(e). Larger refiners must take daily carbon content (CC) measurements, high heat value (HHV) and molecular weight (MW) samples to calculate daily emission factors, and continuously monitor either HHV or low heat value (LHV) to determine a daily average. Small refiners must calculate weekly emissions factors and use the same weekly HHV in calculating emissions. The verifier then determines whether the daily/weekly sampling requirements have been met, the correct methodologies were used for the determination of CC (ASTM D1945-03 or ASTM D1946-90 (2006)), HHL/LHV (ASTM D1826-94(2003), ASTM D3588-98 (2003), ASTM D4891-89 (2006), GPA Standard 2261-00, or on-line instrumentation accurate to within 5.0%), and MW, and that sampling and measurement location are appropriate and avoid bias. To meet Regulatory requirements, ARB recommends the verifier determine that the lab/technician providing the results is qualified. Additionally, if inline or onsite analysis is occurring the verifier should examine the installation, calibration, and maintenance documents for the analysis equipment. Any uncertainty in the methods will be carried over to the assessment for material misstatement.

Refinery fuel gas usage as a fuel or as a feedstock is reported separately. If refinery fuel gas is mixed with natural gas or low Btu gas prior to combustion the operator has three options to report emissions: 1) determine individual fuel flow rates and fuel specific parameters prior to mixing, calculate the individual fuel emissions separately and sum the emissions from the mixture; 2) use CEMS; or 3) determine fuel flow rate and fuel parameters post mixing and calculate emissions using the carbon content or fuel specific emission factor methodologies described above. Note: If a refinery is following the less frequent sampling methods allowed for small refineries, verifiers should review eligibility based on the definition of “small refiner” referenced in 95102(a)(177). This definition takes into account ownership history; a low production rate at an individual facility does not necessarily imply that it is classified as a small refiner under the Regulation.

Catalytic Cracking – Process emissions from catalyst regeneration, in the absence of CEMS data, are calculated by several methods depending on the unit type. Catalyst regeneration in the fluid catalytic cracking unit is generally the largest source of process emissions at a refinery, and these emissions should generally receive close scrutiny by verifiers. The parameters that are required for calculating emissions are generally monitored or estimated as part of normal refinery operations, with the possible exception of carbon fraction determinations.

1) To calculate process emissions from a fluid catalytic cracking unit, the operator must first calculate the hourly coke burn rate as specified in 95113(b)(1)(A) in units of kg/hr or lb/hr. The Regulation then directs the operator to use these values to calculate a daily average coke burn rate in units of kg/day. **However, the method described in 95113(b)(1)(B) contains an error and calculation of an average coke burn rate is incorrect. Instead, the operator should calculate a daily (not average) coke burn rate by summing the hourly coke burn rates (CR) and using 0 for any time the unit was not in operation (converted to units of kg/day). The operator should *not* divide by the number of operational hours. This daily coke burn rate should then be used instead of the daily average coke burn rate to calculate CO_2 emissions using the equation listed in §95113(b)(1)(C).** Keeping track of units helps to yield the correct result, as 95113(b)(1)(C) correctly identifies the units of CR_d as the kg of coke burned per day; however, it is not actually an average value and following 95113(b)(1)(B) will not produce the correct daily coke burn rate. To calculate process CO_2 emissions for the year, equation 95113(b)(1)(C) calculates and sums daily CO_2 emissions over the number of days operated using the appropriate daily coke burn rates and the carbon fraction in the coke burned as determined by the operator.

The verifier may need to ensure that the data required for the calculations are collected appropriately and that the coke burn rate is in the correct units (kg/day). Refineries may already be required to calculate the coke burn rate under 40 CFR 63.1564, and the verifier should review all calculations to make sure they are reported in the correct units and conditions for the Regulation. Even if not required to calculate the hourly coke burn rate by Regulation, most refineries already calculate this for process control purposes. However, the verifier will need to make sure the approach used by the operator is consistent with 95113(b)(1)(A) as there may be some variations in existing approaches. For example, the effect of supplemental (non-coke) fuel combustion would need to be taken into account if it can affect the volume and concentration measurements used in the coke burn rate calculation. **The k-values found in Table 11 of Appendix A or listed in 40 CFR 63.1564 that are used in the coke burn rate equation may not be appropriate for the standard temperature. Operators and verifiers are encouraged to contact ARB for assistance with this calculation.** There is not a requirement that the volumetric flow rates (Q_r, Q_a, Q_{oxy}) or volume percents (%CO_2, %CO, %O_2, %O_{xy}) be within the 5% accuracy required for fuel meters; however, this will be taken into account when considering material misstatement of the total emissions. Neither the methodology nor the sampling frequency for determining the carbon fraction (CF) in the coke

burned, or the methodology for determining inlet and exhaust gas species volume percent (%CO_2, %CO, %O_2, %O_{xy}) are specified by the Regulation. The verifier must make sure a sound methodology for determining the required parameters is in place. The procedures should be appropriate, well documented and minimize uncertainty. The process may include direct measurement or an engineering approach. The verifier must determine if the sampling frequency is appropriate, which is based on the variability of the parameter. Any issues associated with the selected method should be noted in the issues log and discussed with the operator. Any uncertainty in the methodology should be considered when assessing for material misstatement. It is up to the verifier to ensure all accuracy requirements for all measurements used for emissions calculations meet the Regulation's requirements.

2) For other types of catalytic regeneration, as long as it occurs within the boundaries of the refinery, the emissions are calculated as described in §95113(b)(2)(A)&(B). Any regeneration that occurs offsite (outside the facility boundaries as defined in §95102(72)) is not included in the refinery emissions. The methodology for determining the weight fraction of carbon on the catalyst (CF_{spent}, CF_{regen}) is not specified by the Regulation. The verifier may need to evaluate whether a sound methodology for determining the required parameters is in place. The procedures should be appropriate, well documented and minimize uncertainty to provide the most accurate data for the emissions data report. The process may include direct measurement or an engineering approach. The verifier may need to determine if the sampling frequency is appropriate, which is based on the variability of the parameter. Any issues associated with the selected method should be noted in the issues log and discussed with the operator. Any uncertainty in the methodology should be considered when assessing for material misstatement.

<u>Hydrogen Plant</u> – It is important to confirm operational control. If the hydrogen plant is under the same operational control as the refinery, it must report as part of the refinery (§95102(a)(139 and 140). If the hydrogen plant is under independent operational control, it will report separately. In the case of separate operational control, monitoring the transfer of fuels and feedstocks between the two facilities may be more complicated.

Hydrogen plant stationary combustion and process emissions are calculated using one of the three methods specified in §95114(b): (1) CEMS, (2) fuel and feedstock mass balance based on carbon content determination, or (3) a carbon content determination for process emissions and a method specified in 95113(a)(1) for stationary combustion emissions. The Regulation specifies a daily sampling frequency for carbon content of all feedstocks, except unmixed natural gas, which is sampled monthly. The methodologies for measuring feedstock carbon content are not specified but should not differ significantly from the method described in §95125(d)(3) and the verifier must ensure that the methods used are reasonable. The frequency and methodologies for carbon content sampling for fuels is described in §95125(d).

A unique feature of the hydrogen plant process emissions calculations is the "S" factor. This is a way for making sure emissions are not double counted. The "S" factor is used to account for emissions that are accounted for by another method. The "S" factor is not used to account for CO_2 sold. The verifier must be able to trace all "S" factor reductions to another reported emissions source. One common usage of the "S" factor will be PSA off-gas, which may be routed to a fuel gas system, or to a flare for destruction. In both these instances, the emissions would be accounted for through another method. The verifier may need to determine that the data required for the calculations is collected appropriately; specifically the daily/weekly carbon content measurements and that sampling and measurement location are appropriate and avoid bias. Hydrogen plants may also need to report hydrogen produced, hydrogen sold, and CO and CO_2 sold or transferred; however, CO or CO2 sold or transferred offsite may <u>not</u> be subtracted from the reported emissions total. Make sure fuel and feedstock values are reported under the correct categories – fuel should be reported as stationary combustion emission and feedstock should be reported as process emissions. It is possible that the same gas is used as both a feedstock and as a fuel, and therefore reported separately.

<u>Additional Emission Sources</u> – Refineries may be required to calculate emissions from several additional sources. While these sources individually may not make a significant contribution to the overall emissions, as a group they could potentially have an effect on material misstatement in the emissions data report. Therefore, it is important for the verifier to evaluate the risk associated with these sources when completing the sampling plan, and not neglect evaluating these sources for conformance with the Regulation.

<u>Other Fuels</u> – Besides RFG, refineries and hydrogen plants may also combust several other fuels including natural gas, associated gas, low Btu gas, and distillate fuels. The Regulation specifies how emissions for each of these fuels are to be calculated in §95113(a)(1)(A-E).

<u>Coker/Calciner</u> – The coker/calciner process generates low-Btu gases. Reporting the emission from these gasses may or may not be required under the Regulation. If the low-Btu gases are directed to other combustion systems at the refinery, these emissions will be captured under those sources. If the gases are combusted internally in the Coker/Calciner process, reporting the emissions is not required by the Regulation. If these emissions are reported, the verifier may need to ensure that these sources are listed as supplemental or optional.

<u>SF_6 and HFCs</u> – Fugitive SF_6 and HFC emissions associated with electricity generation or cogeneration units located at the facility must be reported using methods under §95111(f) and §95111(g). There are no additional reporting requirements for fugitive SF_6 and HFCs for refineries and hydrogen plants beyond the requirements referenced in section 95111(a)(1)(H) and (J). Any SF_6 onsite, whether in switchgear, bottles or other equipment, must be reported using the EPA inventory method listed in Appendix A. (§95111(c)(7)(F)).

Process Vents – Operators are required to report CO_2, CH_4 and N_2O emissions from process vents using the method described in §95113(b)(3). Operators are required to determine the molar fraction (F_x) of each species in the vent gas stream, the vent rate (VR), and the vent time (VT). There are no requirements for sampling frequency or method to determine F_x, there are also no requirements for the accuracy of the VR or VT. The verifier must be satisfied that the methodologies used to quantify these values are appropriate and should account for any uncertainty when assessing for material misstatement.

Asphalt Production – This method assumes that emissions are not being routed to a destruction device. If emissions are being routed to a destruction device, the operator should not report any emissions for asphalt production and the verifier should determine if the emissions are being accounted for in the destruction device emissions. The operator is required to determine the mass of asphalt blown (M_A), but there are no accuracy requirements provided. The verifier must be satisfied that the methodology used to quantify this value is appropriate and should account for any uncertainty when assessing for material misstatement.

Sulfur Recovery – The operator is required to determine the volumetric flow rate of acid gas (FR). The operator may also determine the molecular fraction of CO_2 in the sour gas (MF) or use the default value (20%). There are no accuracy requirements for FR. The verifier must be satisfied that the methodology used to quantify this value is appropriate and should account for any uncertainty when evaluating for material misstatement. If an operator uses a source specific molar fraction of CO_2 in the sour gas, the verifier should confirm that an annually conducted ARB approved, source test plan was used to determine this value. A source test plan must be approved by ARB for each sour gas stream, and any sour gas stream that does not have an ARB approved plan must use the default value.

Wastewater Treatment – This method assumes that the fugitive methane emissions from wastewater treatment are not being captured. If methane emissions are being captured, the operator may need to report zero emissions from wastewater treatment and the verifier should verify that the emissions are either reported as a fuel for another source or as being destroyed. As in the case of process emissions, several parameters must be measured or determined by the operator. The volume of wastewater treated (Q) and mass of sludge removed (S) are not required to be reported within +/-5% accuracy. The chemical oxygen demand (COD_{qave}) and nitrogen in effluent (N_{qave}) are required to be measured quarterly, and the methods are not specified. The verifier must be satisfied that the methodologies used to quantify these values are appropriate and should account for any uncertainty when assessing for material misstatement. When evaluating the selection of the methane conversion factor (MCF) from Table 12 in Appendix A, the verifier must pay attention to not only the type of treatment and discharge pathway, but the comments associated with each type as well. For further clarification of the MCF values, the verifier can see the reference cited in Table 12.

Oil-Water Separators – The volume of wastewater treated (V_{water}) is not required to be within 5% accuracy. The verifier must be satisfied that the methodology used to quantify this value is appropriate and should account for any uncertainty when assessing for material misstatement. When evaluating the selection of the non-methane hydrocarbon emission factor (NMHC) from Table 13 in Appendix A, the verifier may need to confirm that the correct emissions factor was selected. Additionally, if the separator is connected to a recovery or destruction system and 0 is used for the emission factor, the verifier must make sure emissions are accounted for correctly elsewhere. For further clarification of the NMHC values, the verifier can see the reference cited in Table 13 of Appendix A of the Regulation.

Storage Tanks – Tank emissions can be calculated using the U.S. EPA TANKS Model software. The verifier should look at the inputs to the software and make sure that they are consistent with what the verifier is observing. The verifier should also review the scope of storage tank emissions reported; tanks containing crude oil, naptha, asphalt, distillate oil and gas oil must be included, but tanks containing gasoline and diesel products do not. When tanks are connected to a vapor recovery technology, the operator should report zero emissions and the verifier should confirm that the captured emissions are being reported as a fuel elsewhere or as being destroyed. The operator must either use a species-specific VOC conversion factor or the default factor (0.6). A source test plan must be approved by ARB for the headspace vapor analysis used for the species-specific conversion factor, and if an ARB approved plan is not in place, the operator must use the default value.

Equipment Fugitives – Further clarification of this method can be found in the CAPCOA (1999) reference. The Regulation expands on existing air district requirements in most cases by requiring that screening be extended to all gas service components containing natural gas, refinery fuel gas, and low Btu gases. Verifiers should ensure that refineries have updated their screening procedures where the existing air district rules do not capture all gas service components required by this Regulation. ARB staff recommends that verifiers familiarize themselves with local AQMD/APCD regulations/rules regarding use of the pegged 10,000 ppmv ($E_{VOCP-10}$) or pegged 100,000 ppmv ($E_{VOCP-100}$) factors. The default VOC to CH_4 conversion factor (CF_{VOC}) must only be used when the operator is not able to determine a system specific conversion factor based on gas composition and methane content data. The default VOC to CH_4 conversion factor (CF_{VOC}) should only be used when the operator does not have a system specific conversion factor. The system specific conversion factor should be available in most cases. If this is reported as *de mininis*, the operator must be using a reasonable and well-documented alternative method that takes into account the quantity and type of components, and available data on leak rates. Alternative methods must attempt to accurately estimate emissions, and not be biased toward over- or under-estimating emissions.

Flares – The verifier must confirm that emissions from pilot and purge gas were calculated according to §95113(a)(1) and (2). The verifier must be familiar with local AQMD/APCD regulations/rules regarding flares. If the refinery is required to report

CH_4 and non-methane hydrocarbon (NMHC) emissions to the local AQMD/APCD, the refinery must use the reported values in the method described in §95113(d)(2)(A). When the refinery is required by the district to determine the actual carbon fraction in the NMHC the verifier must determine that the refinery used this value when reporting. The flare destruction efficiency (FE) is specified by the local AQMD/APCD. The verifier must also review the CH_4 emissions from the flare the refinery reported to the local AQMD/APCD.

If the operator is subject to South Coast AQMD Rule 1118, the refinery will report CO_2 emissions using ROG as described in Attachment B of the rule. The verifier should determine the refinery used the correct method to calculate flare emissions. The destruction efficiency specified by South Coast AQMD will be used. Methane emissions are not required to be reported.

If the refinery is not subject to reporting flare emissions to a local AQMD/APCD, the refinery reports CO_2 emission based on throughput. The verifier should make sure that the refinery crude feed throughput (RFT) volume is in m^3/year, rather than barrels/year. The RFT is not subject to the 5% accuracy requirement. The verifier must be satisfied that the methodology used to quantify this value is appropriate and should account for any uncertainty when evaluating for material misstatement.

Emissions from the destruction of low Btu gases by a method other than flare are calculated by the method described in §95113(d)(3). The verifier must confirm that carbon content (CC_A) and molecular weight (MW_A) are determined quarterly (at least four times a year) using the methods from §95125(d)(3)(A). The volume of gas destroyed (GV_A) is only subject to a **7.5%** accuracy requirement. This requirement should be confirmed in the same manner as the 5% accuracy requirement is for fuel measurement devices used to calculate GHG emissions – examining the meter, the installation, and calibration and maintenance records.

Note: The verifier should not accept the value reported to an AQMD/AQMD without confirming how it was calculated. Just because the local AQMD/APCD accepted the value does not relieve the verifier of their responsibility to confirm the value.

<u>Molar Volume Conversion Factor</u> – Gaseous flow measurements are corrected to standard temperature and pressure conditions, and the Regulation species two different STP conditions that are commonly used in California industry. The verifier must confirm that the appropriate molar volume conversion (MVC) factor is used based upon the STP conditions used by the refinery.

<u>Double Counting</u> – It is important to watch for double counting. Some process or fugitive emissions may be routed to a destruction device or recovered as fuel. The verifier should check that emissions reported under process or fugitive emissions are not also being counted under the flare emissions or under combustion emissions. Emissions from many combustion sources at refineries, particularly refinery fuel gas systems, are calculated upstream, creating the potential for double counting of emissions downstream. Additionally, it is important for the verifier to check that

combustion emissions are not being reported both under the fuel based method and the CEMS method when a CEMS is installed on a device.

Additional Guidance – It is recommended that verifiers review the reporting guidance document for refiners found at http://www.arb.ca.gov/cc/reporting/ghg-rep/ghg-rep-guid/10_PetroRefine.pdf, as well as the frequently asked questions for both reporting and verification found at http://www.arb.ca.gov/cc/reporting/ghg-rep/updated_faq.pdf.

---

5. Power Entities – Electricity Transactions Sector

Regulatory Requirements

Electricity retail providers, marketers, and generating facility operators subject to the Regulation must meet all of the reporting requirements as provided in the Regulation, including §95111(b).

At least one member of the verification team providing verification services to an electricity transactions entity must be an ARB-accredited electricity transactions specialist. To become an accredited electricity transactions specialist, an individual must meet the requirements in §95132.

Supplemental Guidance

Electricity transactions reporting is akin to financial accounting and chain of custody. Therefore, information gathered on-site – including any computer files, documentation and personnel interviews – will be very valuable for the verifier to use in providing verification services.

Electricity Sector Operator Core Verification Checks – A list of documents that can be reviewed when verifying reported fugitive emissions or electricity transactions data is available here: http://www.arb.ca.gov/cc/reporting/ghg-ver/ghg-ver.htm.

The verifier may use this list as a guide and may ask for other supporting information as needed to verify the submitted GHG data report. The power sector operators should be prepared to provide any of these documents, or additional documents to a verifier upon request as part of verification.

Since there are **no *de mininis* provisions for electricity transactions**, the reporting of all electricity transaction information is required as prescribed in §95111(b).

SF_6 Emissions Sources – The SF_6 emissions inventory reporting method and form are located in Appendix A of the Regulation. This form must be followed closely by the operator (§95111(g)). Although SF_6 is measured in pounds on the form, an operator submitting their emissions data report via the Reporting Tool, must enter the SF_6 in metric tonnes. Verifiers need to ensure SF_6 is reported using the correct units.

Site Visits – It is important to be well prepared for the visit as it is one of the most critical components of the verification process. If the operator is unwilling or unable to release data for the verifier to evaluate back at the offices of the verification team, the bulk of the verification information and perhaps the entire document review may occur on-site. This is an opportunity for the verifier to understand the data management system, the GHG inventory management system, check records and documentation, and to speak with key personnel responsible for generating, coordinating, and assembling the data required for the emissions report. Accomplishing this high-level understanding of the reporting entity involves obtaining as much information as possible before the visit, and having a plan of what needs to take place during the visit. It is also important to ensure all the key people the verifier wishes to meet with are available during the period of the visit. Verification is not a quick data check; it is a detailed process that will allow the verifier to provide reasonable assurance as required by the Regulation.

Organizational structure of entity – Electricity transactions are reported at the entity level. Although operational control is generally known, complex organizational structure could create confusion. In some cases an entity reporting electricity transactions will also own one or more generation facilities. A verification body proposing to perform verification services for the entity must make certain that they continue to adhere to all of the COI rules, including whether they have done previous work for the subsidiaries or sister companies of the reporting entity.

Access to original documentation – Although a select number of long-term purchase contracts are filed on paper, most of the documentation in electricity transactions are electronic. These will range from Word and Excel documents, to viewing original data on the computer screen via the Open Access Technology, Inc. (OATI) data management system interface. It is important for verifiers to remember that they should never attempt to access the reporting entity's database – verifiers should always request an analyst to query information requests for them. However, because the Regulation allows the verifier access to original documentation, the verifier could request to be present while the analyst carries out the query.

Examples of reporting situations – Understanding the different situations that create a reporting obligation for electricity transactions is the basis for evaluating conformance. The following pages will list several situations, which are listed in Chapter 8 of the Reporting Guidance. Here, they are diagramed and further explained.

The first five scenarios are situations that focus on first deliverers, while the remaining scenarios discuss other complex situations for reporting electricity transactions.

.

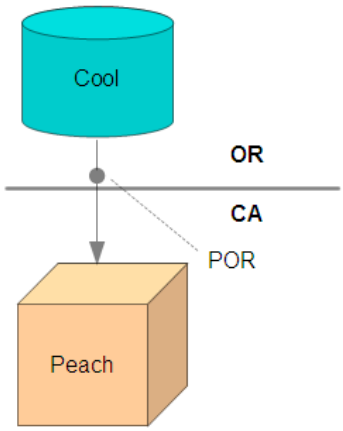

First Deliverers of Power –

Scenario 1: California Utility as First Deliverer –

Peach is a California Utility purchasing 1000 MWh from Cool Energy, located in Oregon. Peach takes possession at the point of receipt (POR), and acts as the first deliverer since they owned the electricity as it was brought across the state line into California.
Reporting obligations:
Cool: Does not report.
Peach: Reports a 1000 MWh purchase of Unspecified Power where they are the first deliverer, region: Pacific Northwest (PNW), counterparty: Cool
Discussion: Since Cool is not the first deliverer of power into California, they do not have any obligation to report.

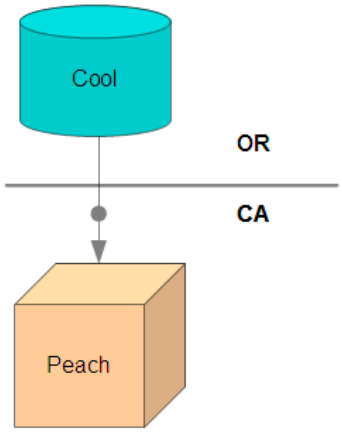

Scenario 2: Imports from Utilities Outside California –

Cool Energy, a supplier, imports 1000 MWh into California and delivers to Peach at the FPOD.
Reporting obligations:
Cool: Since they act as first deliverer of the power and the supplier to Cool at the POR, they are required to report the 1000 MWh sale into CA.
Peach: As a retail provider, they report a 1000 MWh Unspecified Purchase, region: PNW, counterparty: Cool. This transaction must be indicated as an import, but not with Peach as First Deliverer.
Discussion: The Regulation requires the party who acts as first deliverer of power into California, to report it. In this case, it amounts to a double-reporting of that sale for monitoring purposes, but will not be double-reported for cap-and-trade compliance obligations or GHG inventory.

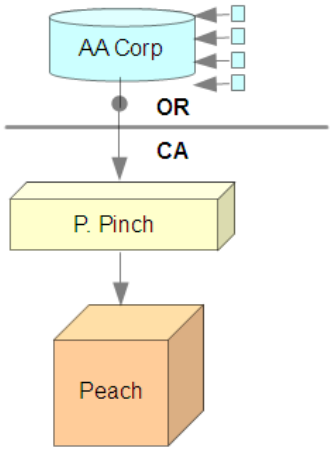

Scenario 3: Marketer as First Deliverer –

Peach requests 1000 MWh from P. Pinch Marketers in CA, who purchases that amount from AA Corp, an operator of several generating facilities in OR. P. Pinch is the first deliverer of power into CA.
Reporting obligations: **AA Corp**: Since they are not importing power into CA, they have no reporting obligations.
P. Pinch: Reports a 1000 MWh sale into CA, where they are the first deliverer of electricity into California, having taken possession of the electricity at the POR, which was in Oregon. Region: PNW, supplier: AA Corp.
Peach:Reports a 1000 MWh Unspecified purchase from region: PNW, counterparty: P. Pinch, supplier: AA Corp.
Discussion: Even though Peach can see that the power comes from AA Corp, it is considered Unspecified unless Peach has a contract with AA Corp mapping the power directly from a specific facility.

Figure A-5.1 Examples of Reporting Situations (1)

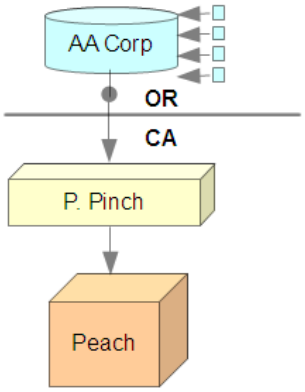

Scenario 4: California Utility as Importer but not First Deliverer –

Like the previous example with Marketer as Deliverer, Peach is buying 1000 MWh of electricity from AA Corp, through the marketer, P. Pinch. This time however, Peach does have a contract to purchase the energy from AA Corp.
The reporting obligations would remain exactly the same as the previous example.
Discussion: Although in this example Peach does have a contract with AA Corp and P. Pinch simply acts as the importer of energy, Peach's contract does not stipulate which of AA Corp's generating facilities the it is coming from. Therefore, the purchase is still considered "unspecified".

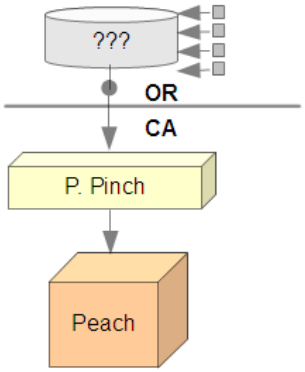

Scenario 5: California Retail Provider does not know the source of an import –

In the rare case where a CA Retail Provider purchases energy from a marketer, and e-tag information is not available regarding the origin of it:
P. Pinch: Responsible for reporting their import of energy into California, listing their supplier as counterparty.
Peach: Because they do not know where the energy originated, Peach will report the purchase as type: Unspecified, region: California, counterparty: P. Pinch, even though they know it was an import.
Discussion: Peach is not the first deliverer here, therefore P. Pinch reports this import already.

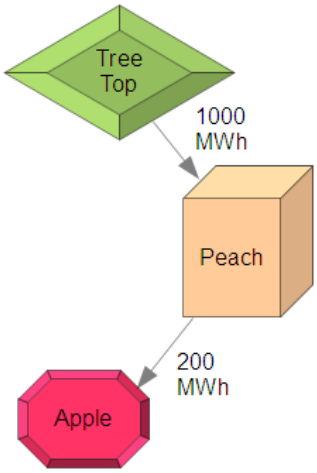

Other Reporting Scenarios –

Scenario 6: Power Taken and Sold from a Facility Operated by a Retail Provider –

In this example, Peach owns a generation facility, Treetop. In a reporting year, Treetop produces 1000 MWh, but Peach only needs 800 MWh. Therefore, Peach sells 200 MWh to Apple. The reporting obligations are as follows:
Treetop: They will report net electricity generation figures in their emissions data report.
Peach: Because they are the parent company of Treetop, Peach is obligated to show that they took or purchased all of the power generated, 1000 MWh as a specified purchase, region: California, counterparty: Peach. They will also report a wholesale sale of 200 MWh to Apple.
Apple: Reports a 200 MWh unspecified purchase, region: CA, counterparty: Peach.
Discussion: Since Peach is the owner of Treetop, Peach has to **take** all of the energy from them, before selling any of it to Apple.

Figure A-5.2 Examples of Reporting Situations (2)

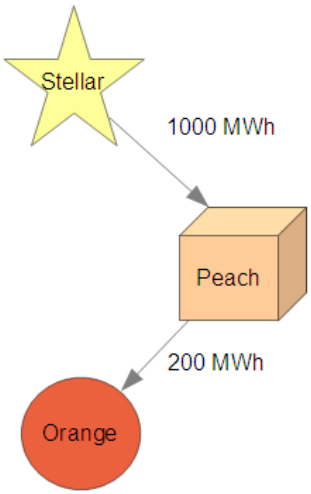

Scenario 7: Power Taken and Sold from a Facility NOT Operated by a Retail Provider –

Peach has a "take or pay" agreement with Stellar Generating Facility for 1000 MWh and they do not own or operate Stellar. As in the previous example, Peach cannot use all 1000 MWh and must sell 200 MWh to Orange Utility.
Stellar: They will report net electricity generation figures in their emissions data report.
Peach: The nature of Peach's contract with Stellar makes them purchase all of the energy they agreed to in their contract, then sell the remainder as wholesale. Therefore Peach will report a Specified purchase of 1000 MWh, region: CA, counterparty: Stellar. Peach also reports a wholesale sale to Orange of 200 MWh.
Orange: They will report an unspecified purchase of 200 MWh, region: CA, counterparty: Peach.
Discussion: Here, it is important to note that although Peach does not need all of the electricity it purchases, they still have to take all of it and sell off what they do not need in order to satisfy the terms of their specified contract.

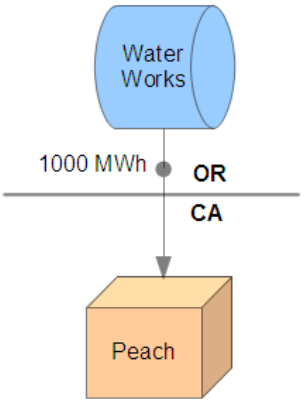

Scenario 8: Purchase from a Large Hydroelectric Plant –

Peach has a contract to purchase 1000 MWh of power from Waterworks, a 50 MW hydro-electric generating facility located in Oregon. The contract has been in effect since 2006.
Waterworks: Large hydroelectric, nuclear, solar and wind generation are exempt from mandatory reporting.
Peach: Because there are special reporting requirements for purchases from a large hydro-electric facility, Peach will report the specified purchase of 1000 MWh in the region: PNW and counterparty: Waterworks. Peach also reports that they are the first deliverer at the FPOD in Oregon and that they satisfy stipulation 1 for purchases from a large hydro facility in the reporting tool.
Discussion: In order to discourage contract shuffling, stipulation 1 in the reporting tool spreadsheet indicates that Peach did, in fact, have a valid contract with Waterworks before January 1, 2008.

Figure A-5.3 Examples of Reporting Situations (3)

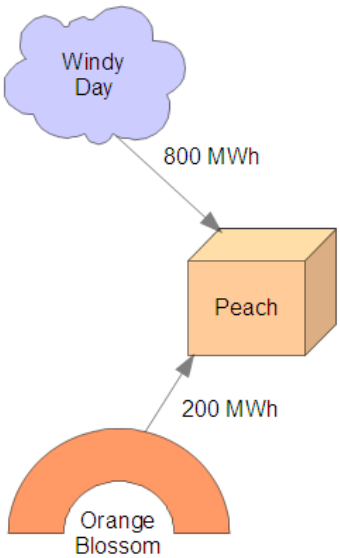

Scenario 9: Purchase from CA Eligible Renewable Resource (Firming Power) –

Peach has a contract to purchase 1000 MWh from Windy Day Power Farm, that includes firming power from Orange Blossom Utility. Windy Day is only able to provide 800 MWh of power over the year, so Orange Blossom must provide 200 MWh to fulfill the contract.
Windy Day: Large hydroelectric, nuclear, solar and wind generation is exempt from mandatory reporting unless they report another sector.
Peach: Since Peach received their energy from two different sources, they need to report it in the form of separate transactions. 1) A Specified Purchase of 800 MWh, region: CA , counterparty: Windy Day. 2) Unspecified Purchase of 200 MWh, region: CA, counterparty: Orange Blossom.
Orange Blossom: They will report net electricity generation figures in their emissions data report.
Discussion: Since Peach's contract was specifically with Windy Day, the only specified purchase can be claimed from Windy Day, not Orange Blossom.

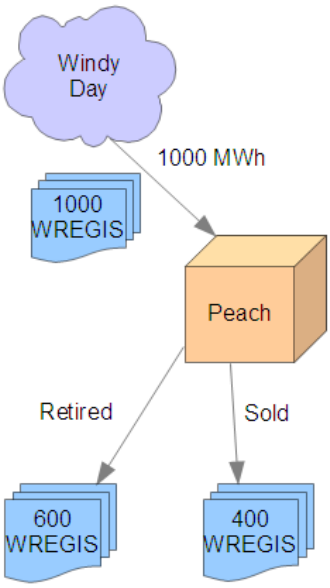

Scenario 10: Purchase of Null Power –

Peach has a contract with Windy Day (a California renewable power generation facility), and buys 1000 MWh of power with WREGIS ("renewables") certificates. Peach retires (uses) 600 of the certificates and sells the remaining 400 certificates, separated from the power, to another buyer. One reason for a utility to sell certificates separately is if the utility has already fulfilled their stakeholder obligation to purchase renewable energy for the year. In such a case, claiming extra renewables will not have extra benefit, so the certificates are sold separately, and null power is claimed for the amount of electricity that was used but the WREGIS certificates sold.
Windy Day: Large hydro-electric, nuclear, solar and wind generation is exempt from mandatory reporting.
Peach: Two distinct purchases are reported: 1) 600 MWh Specified, region: CA, counterparty: Windy Day. 2) 400 MWh Unspecified, region: CA, counterparty: Windy Day.
Discussion: Although Peach has a contract specifying power from Windy Day, Peach is also selling the certificates certifying the renewable portion, to another entity. Therefore, the 600 MWh portion for which Peach retires the certificates is still considered a renewable when used and so it was also a specified purchase. However the 400 MWh portion for which the certificates were sold separately, is now considered null power, so not only are they no longer considered renewable, but now they are also considered an unspecified purchase.

Figure A-5.4 Examples of Reporting Situations (4)

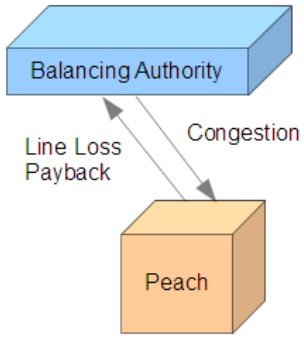

Scenario 11: Transmission Line Congestion, Line Losses –

Sometimes Peach is obligated to inject power into the transmission system for line-loss paybacks. Other times, Peach must receive power from the system to accommodate transmission line congestion.
Peach: When Peach must inject power into the system, they will report it as a wholesale sale of power. Conversely, when they receive power from the system to alleviate congestion, this is considered a purchase and would be reported as such. In these cases, the Balancing Authority is listed as the counterparty.
Balancing Authority: The Balancing Authority does not report.
Discussion: The fact that no money was exchanged in these transactions is not relevant for the purposes of reporting transactions.

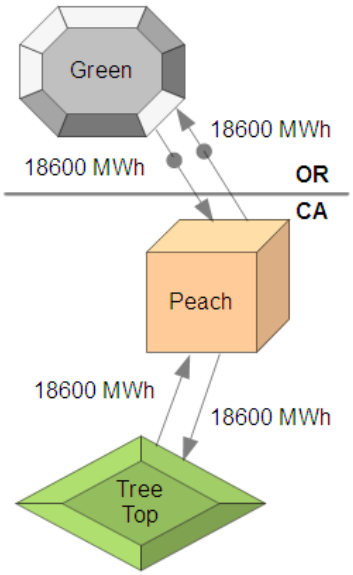

Scenario 12: Seasonal Exchanges –

Peach arranges to deliver 25 MW from their Treetop Generating Facility around the clock for the month of January, to Green Power, in exchange for an equal amount of power delivered in May, by Green's fleet of generating facilities. (25 MW x 24 hours x 31 Days = 18600 MWh).
Peach: Peach reports a wholesale sale to Green for 18,600 MWh in January with themselves as the exporter or the first deliverer at the POR in OR. In May, Peach will also report an Unspecified purchase for 18600 MWh region: PNW, counterparty: Green.
Green: Green is located outside of CA and is not obligated to report their transactions, since they are not the importer or exporter during these transactions. However, Green does have the option to report voluntarily, and they opt to do so.
Discussion: One reason for a seasonal power exchange would be to utilize renewables such as hydroelectric, when they are able to generate more energy than the local utility can use. At a later date, ARB will match the emission rate associated with the Treetop Generating Facility to the power sale made to Green. Green's fleet average emission factor will be matched with the sale made to Peach.

Figure A-5.5 Examples of Reporting Situations (5)

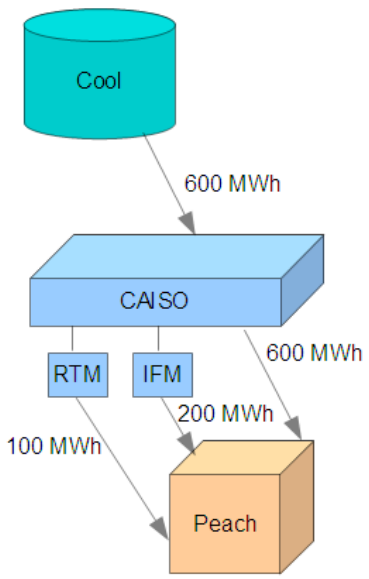

Scenario 13: CAISO Markets –

Peach is located in California and has a total forecast load of 900 MWh for the peak hour of the next day. Peach agrees to purchase 600 MWh from Cool, also located inside California. Peach schedules this purchase from Cool through the CAISO Integrated Forward Market (IFM). Peach then submits a bid for the remaining 300 MWh in the IFM. CAISO confirms that only 200 MWh will be available through the IFM at the bid price. The next day, Peach buys 100 MWh from the CAISO Real Time Market (RTM), in order to meet its load.
Peach: There are three separate transactions.
1) The first 600 MWh purchase from Cool through CAISO will be reported as Unspecified, region: CA, counterparty: Cool. 2) The 200 MWh purchased through the CAISO IFM is reported as an Unspecified purchase, region, IFM, counterparty: CAISO. 3) The final 100 MWh purchased through CAISO RTM is reported as an Unspecified purchase, region: RTM, counterparty: CAISO.
CAISO: Because CAISO is a balancing authority, they do not report transactions to ARB.
Cool: Since Cool is inside of CA, they will report their wholesale sales of electricity normally.
Discussion: CAISO is the balancing authority for Peach, but here they also operate two different markets for energy trading, the IFM, or day-ahead market, and the RTM, or real-time market. Even though all three purchases were transacted through CAISO, only the two transactions where an open bid was fulfilled through CAISO are listed with CAISO as the counterparty.
Note: The CAISO markets became active only after 1 April 2009, so reporting prior to this date will not use the CAISO markets for transaction reporting.

Figure A-5.6 Examples of Reporting Situations (6)

Because understanding reporting requirements is critical for the verifier in the electricity transaction sector, below are some examples of common reporting errors by power entities.

Net Generation (Retail Providers) - Although the electricity transactions sector only reports purchases and sales of power, it is less clear how to report wholesale purchases or sales from fully or partially owned generating facilities. The Regulation requires that power entities report the power they purchase/take from facilities they operate or own (fully or partially), as well as the net generation for the same facilities (§95111(b)(3)(Q)). Although net generation is reported at the facility level and submitted with the emissions data report for that facility, the power entity (parent company or partial owner) needs to also report how much their company purchased/took – in case they a) did not own 100% of the facility or b) did not take 100% of the power generated by the facility. This is the same situation as the diagram in Scenario 6 (Power taken and sold from a facility operated by a retail provider).

Where/How to report net electricity generation - Depending on the type of facility owned or partially owned, retail providers may need to report the net generation in one of three different places. First, if the entity operates the generation facility and the facility emits GHGs, they report net generation as an energy and production submission with the normal emissions data report for the facility. Second, if they operate a renewable facility, they must use sheet one of the hydro-nucl-sol-wind spreadsheet. Third, if they own the facility but do not operate it, sheet two of the hydro-nucl-sol-wind spreadsheet may be used.

Renewable resources and owned facilities (retail providers) - Retail providers need to fill out and attach the hydro-nucl-sol-wind file if they operate a renewable resource or have ownership in other facilities they do not operate.

Balanced reporting of wholesale transactions and retail sales (retail providers) - If the retail provider has followed the Regulation correctly, they must be able to do the following calculation:

IMPORTS + WHOLESALE PURCHASES/TAKES – EXPORTS – WHOLESALE SALES = RETAIL SALES

The numbers on both sides of the equation may not match perfectly because of line losses and other factors such as unspecified purchases and sales, but they should be reasonably close. If the calculation is off significantly, the verifier should request a detailed explanation. A possible explanation for when the equation does not balance is that the retail provider forgot to include their purchases/takes from operated facilities as in the net generation example above.

Facility identification numbers for specified transactions - Retail providers need to use the proper ARB facility ID numbers for specified transactions and when reporting for renewable resources and owned facilities. In some cases it may be difficult to identify all of the facilities from whom they take power. The organization of the facility ID numbers is as follows:

Facility ID numbers are 6-digit numbers where

100000 series: In-state or out-of-state facilities with GHG emissions that are required to submit reports to ARB

400000 series: Facilities below ARB's reporting threshold

500000 series: Hydroelectric

600000 series: Nuclear

700000 series: Solar

800000 series: Wind

900000 series: Out-of-state facilities that do not report to ARB.

Examples of Aggregating Transactions - The goal of verification is to ensure accuracy and conformance with respect to regulatory requirements. Proper reporting is especially important in Electricity Transactions because: 1) there is a large and complex volume of data reported to ARB each year and 2) every transaction must be traceable back to original contracts – if aggregation is not completed properly, it will be impossible to follow a transaction through the system.

Before reporting, the transactions from Table A-5.3 need to be sorted (aggregated) into a series of bins. The flow diagram, at right, contains all of the possible choices for sorting the wholesale Power Purchased/Taken from CA sources for Retail Providers. Each transaction will be placed into only one bin.

Starting from the top of Table A-5.2 one should work their way through the flow diagram and combine like transactions by adding the MWh together with other transactions in the same bin (see shaded example on Table A-5.4).

This flow diagram was also provided in the GHG Reporting Guidance in Chapter 8 (Chart 8-e), along with several other charts depicting the method of reporting for the other transaction spreadsheets.

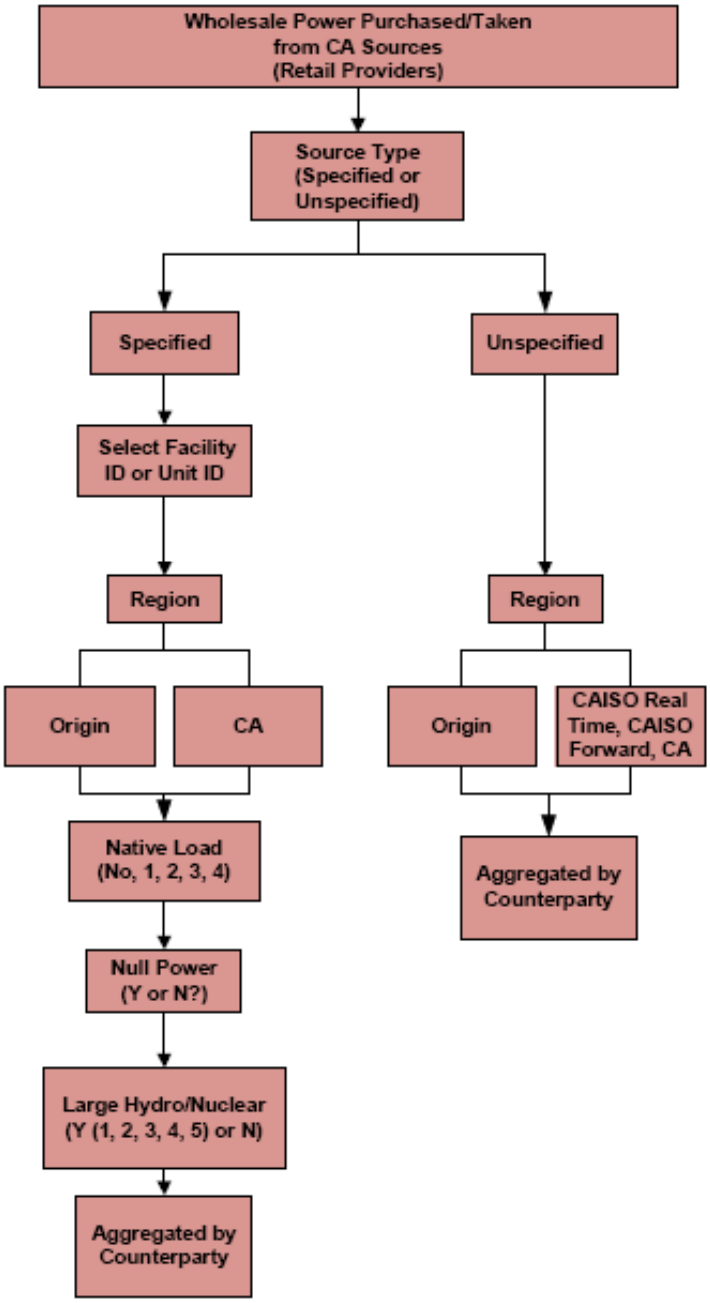

Table A-5.2 Flow diagram describing aggregation of electricity transactions of wholesale power purchased from CA sources (includes power taken from owned or partially owned generation facilities).

WHOLESALE POWER PURCHASED/TAKEN FROM CALIFORNIA SOURCES									
Counterparty Name	**Units**	**Source Type**	**Origin/ Destination**	**Geographic Region**	**Native Load Stipulation**	**Null Power**	**Large Hydro/ Nuclear Stipulation**	**ARB ID**	**Facility or Unit Name**
Aggregated by Counterparty	**MWh**	**Specified** or Unspecified	Origin Only	**Specified** – CA **Unspecified** - CAISO Real Time, CAISO Forward, or CA	**Specified Only** – No, Stip. 1, Stip. 2, Stip. 3, Stip. 4	**Specified Only** - Yes or No	**Specified Only** - No, Stip. 1, Stip. 2, Stip. 3, Stip. 4, or Stip. 5	**Specified Only**	**Specified Only**
Cool	25	Unspecified		CAISO RTM	No	No	No		
Treetop	100	Specified		CA	No	No	No	10945	Bartonville
Waterworks	50	Specified		CA	Stip. 1	No	Stip. 1	50102	Riverside
Windy Day	135	Specified		CA	No	No	No	80681	Sky Park
Cool	60	Unspecified		CAISO RTM	No	No	No		
Windy Day	80	Unspecified		CA	No	Yes	No		
Windy Day	30	Specified		CA	No	No	No	80681	Sky Park
Treetop	100	Specified		CA	No	No	No	10945	Bartonville
Cool	175	Unspecified		CAISO RTM	No	No	No		
CAISO	95	Unspecified		CAISO IFM	No	No	No		
Waterworks	190	Unspecified		CA	No	Yes	No		
Cool	20	Unspecified		CA	No	No	No		
Waterworks	40	Specified		CA	Stip. 1	No	Stip. 1	50102	Riverside
Windy Day	50	Specified		CA	No	No	No	80681	Sky Park
CAISO	100	Unspecified		CAISO IFM	No	No	No		
Treetop	90	Unspecified		CAISO RTM	No	No	No		

Table A-5.3 This spreadsheet contains annual transactions for a power entity.

WHOLESALE POWER PURCHASED/TAKEN FROM CALIFORNIA SOURCES

Counterparty Name	Units	Source Type	Origin/ Destination	Geographic Region	Native Load Stipulation	Null Power	Large Hydro/ Nuclear Stipulation	ARB ID	Facility or Unit Name
Aggregated by Counterparty	**MWh**	**Specified** or Unspecified	Origin Only	**Specified** – CA **Unspecified** - CAISO Real Time, CAISO Forward, or CA	**Specified Only** – No, Stip. 1, Stip. 2, Stip. 3, Stip. 4	**Specified Only** - Yes or No	**Specified Only** - No, Stip. 1, Stip. 2, Stip. 3, Stip. 4, or Stip. 5	**Specified Only**	**Specified Only**
Cool	25	Unspecified		CAISO RTM	No	No	No		
Treetop	100	Specified		CA	No	No	No	10945	Bartonville
Waterworks	50	Specified		CA	Stip. 1	No	Stip. 1	50102	Riverside
Windy Day	135	Specified		CA	No	No	No	80681	Sky Park
Cool	60	Unspecified		CAISO RTM	No	No	No		
Windy Day	80	Unspecified		CA	No	Yes	No		
Windy Day	30	Specified		CA	No	No	No	80681	Sky Park
Treetop	100	Specified		CA	No	No	No	10945	Bartonville
Cool	175	Unspecified		CAISO RTM	No	No	No		
CAISO	95	Unspecified		CAISO IFM	No	No	No		
Waterworks	190	Unspecified		CA	No	Yes	No		
Cool	20	Unspecified		CA	No	No	No		
Waterworks	40	Specified		CA	Stip. 1	No	Stip. 1	50102	Riverside
Windy Day	50	Specified		CA	No	No	No	80681	Sky Park
CAISO	100	Unspecified		CAISO IFM	No	No	No		
Treetop	90	Unspecified		CAISO RTM	No	No	No		

Table A-5.4 Aggregation Example, Continued:
Sort each transaction according to the flowchart in Table A-5.2.

Table A-5.5 Aggregation Completed

WHOLESALE POWER PURCHASED/TAKEN FROM CALIFORNIA SOURCES									
Counterparty Name	Units	Source Type	Origin/ Destination	Geographic Region	Native Load Stipulation	Null Power	Large Hydro/ Nuclear Stipulation	ARB ID	Facility or Unit Name
CAISO	195	Unspecified		CAISO IFM	No	No	No		
Cool	260	Unspecified		CAISO RTM	No	No	No		
Cool	20	Unspecified		CA	No	No	No		
Treetop	200	Specified		CA	No	No	No	10945	Bartonville
Treetop	90	Unspecified		CAISO RTM	No	No	No		
Waterworks	90	Specified		CA	Stip. 1	No	Stip. 1	50102	Riverside
Waterworks	190	Unspecified		CA	No	Yes	No		
Windy Day	215	Specified		CA	No	No	No	80681	Sky Park
Windy Day	80	Unspecified		CA	No	Yes	No		

Additional Guidance – ARB suggests verifiers be familiar with this guidance before providing verification services for power entities, and power entities may find this guidance an important resource to identify the type of information required to be assembled for verification purposes. ARB staff has the following additional guidance available:

Electricity Transactions Sectors: Instructional Guidance for Mandatory GHG Emissions Reporting:

http://www.arb.ca.gov/cc/reporting/ghg-rep/ghg-rep-guid/08_ElectricitySec.pd

Electricity Transactions Sector Step-by-Step Guide for Using the Reporting Tool:

http://www.arb.ca.gov/cc/reporting/ghg-rep/ghgtoolpowerentity.pdf

End of document