California Environmental Protection Agency

# Air Resources Board

# Initial Statement of Reasons for a Proposed Statewide Regulation to Reduce Volatile Organic Compound Emissions from Aerosol Coating Products and Amendments to the Alternative Control Plan for Consumer Products

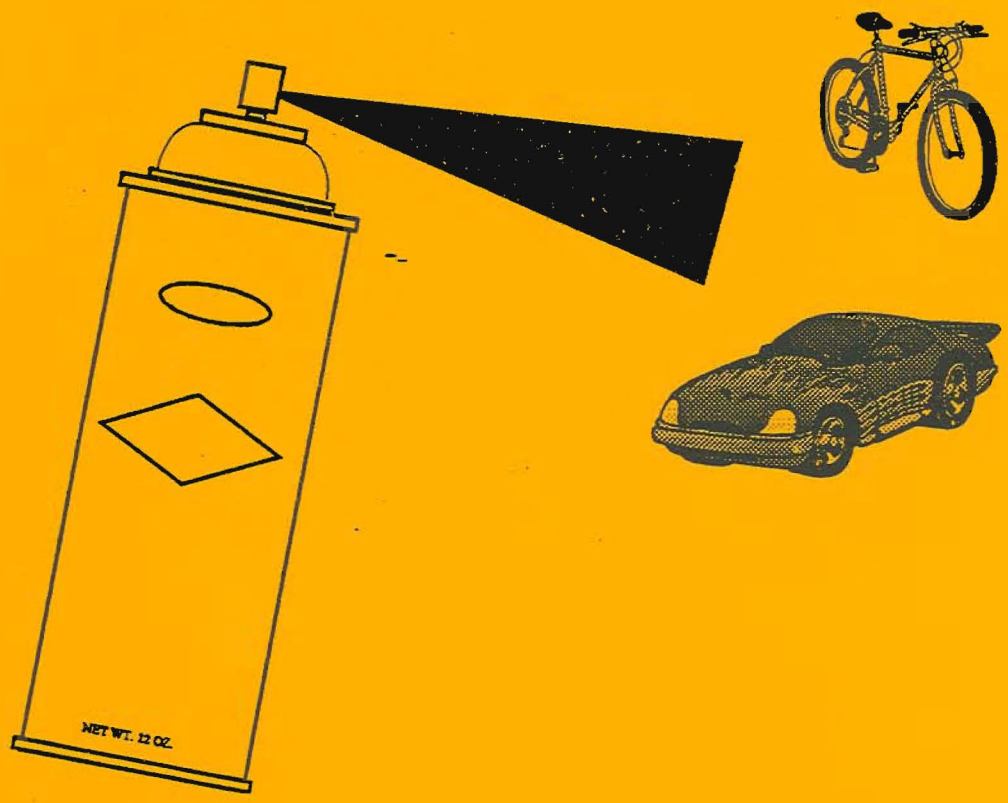


**Release Date:**
**February 3, 1995**

State of California
AIR RESOURCES BOARD

# INITIAL STATEMENT OF REASONS FOR A PROPOSED STATEWIDE REGULATION TO REDUCE VOLATILE ORGANIC COMPOUND EMISSIONS FROM AEROSOL COATING PRODUCTS AND AMENDMENTS TO THE ALTERNATIVE CONTROL PLAN FOR CONSUMER PRODUCTS

Prepared by:

Solvents Control Section
Stationary Source Division

January 1995

## ACKNOWLEDGMENTS

This report and the proposed statewide regulation to reduce emissions of volatile organic compounds from aerosol paints were developed by the Air Resources Board Solvents Control Section staff with the participation of industry representatives and local air quality management districts. We would particularly like to thank the National Paint and Coatings Association, the Bay Area Air Quality Management District, the South Coast Air Quality Management District, and the many individual aerosol paint manufacturers and marketers that provided valuable comments. The following Air Resources Board staff participated in the preparation of this report:

Air Resources Board Staff

Paul M. Milkey (Lead)
Julie A. Billington, Ph.D.
Marline E. Hicks
Robert C. Jenne, J.D.
David Julian
Lisa N. Kasper
Reza Mahdavi, Ph.D.
Karin E. Ricker, Ph. D.
William A. Riddell
Floyd Vergara
Edward L. Wong

# Initial Statement Of Reasons For a Proposed Statewide Regulation to Reduce Volatile Organic Compound Emissions from Aerosol Coating Products and Amendments to the Alternative Control Plan for Consumer Products

## SUMMARY TABLE OF CONTENTS

VOLUME I: INTRODUCTION AND EXECUTIVE SUMMARY

VOLUME II: TECHNICAL SUPPORT DOCUMENT

# VOLUME I: INTRODUCTION AND EXECUTIVE SUMMARY

# Volume I: INTRODUCTION AND EXECUTIVE SUMMARY

Contents | Page


| | | | |
|---|---|---|---|
| **I.** | **Introduction** | | I.1 |
| | A. | Background | I.1 |
| | B. | Consumer Products Regulations | I.4 |
| **II.** | **Executive Summary** | | II.1 |
| | A. | Proposed Aerosol Paint Regulation | II.1 |
| | B. | Proposed Amendments to the Alternative Control Plan | II.14 |
| **III.** | **Recommendation** | | III.1 |

# I.

# INTRODUCTION

This report presents the Air Resources Board (ARB) staff's proposed regulation to reduce emissions of volatile organic compounds (VOC) from aerosol paints. We have also proposed amendments to the Alternative Control Plan (ACP) regulation to provide aerosol paint manufacturers with greater flexibility in meeting the requirements of the proposed aerosol paint regulation.

Our two primary goals in developing the proposed regulation and amendments to the ACP are the following:

(1) achieve the maximum feasible reduction in VOC emissions from aerosol paints, as specified in the California Health and Safety Code section 41712, and

(2) provide aerosol paint manufacturers with flexibility in meeting the requirements of the proposed regulation.

This report comprises the Initial Statement of Reasons for Proposed Rulemaking as required by the Administrative Procedure Act. There are two volumes to this report. Volume I, "Introduction and Executive Summary," provides an overview of the purpose of the regulation, a summary of our recommendations and the environmental and economic impacts from our proposal. The executive summary is presented in question-and-answer format using commonly asked questions about our efforts to regulate aerosol paints. Volume II, "Technical Support Document for a Proposed Statewide Regulation to Reduce Volatile Organic Compound Emissions from Aerosol Spray Paints," is a more detailed presentation of the technical basis for the proposed regulation.

## A. BACKGROUND

California continues to have severe air quality problems, and emissions from consumer products contribute to these problems. The most pervasive air pollutants in California are ozone and $PM_{10}$. Ozone is a major respiratory irritant that is the primary constituent of photochemical "smog." $PM_{10}$ is minute particulate matter of 10 microns or less equivalent aerodynamic diameter which penetrates into the deepest regions of the lung.

To protect public health, state and federal ambient air quality standards for these pollutants have been established. Despite previous regulatory efforts which have achieved

significant emission reductions over the last 25 years, widespread and frequent exceedances of the ambient air quality standards continue to occur throughout California.

Consumer products are widely distributed, chemically-formulated goods that contain varying quantities of VOCs. In the presence of sunlight, the VOCs from consumer products and other sources react with oxides of nitrogen ($NO_x$) to form ozone. Volatile organic compounds have also been found to be a source of $PM_{10}$, either through condensation of the VOCs or complex reactions of VOCs with other compounds in the atmosphere.

Although they are clearly not the only sources of VOCs, consumer products nevertheless are significant area-wide contributors to California's air quality problems. In general, the VOC emissions from consumer products are directly proportional to population. In 1991, the use of consumer products by 30 million people in California resulted in an estimated 260 tons per day of VOC emissions, which is approximately 10 percent of the total nonvehicular VOC emissions in the state. In addition, it is expected that the emissions from consumer products will increase significantly in the future if uncontrolled. The emissions from consumer products are projected to be 370 tons per day in 2010 if uncontrolled. This makes consumer products one of the largest categories of nonvehicular, anthropogenic (man-made) VOC emissions in California. By comparison, the use of architectural and industrial maintenance (AIM) coatings, another large category of solvent-use VOC emissions, results in approximately 160 tons VOC emissions per day (1991 ARB Emissions Inventory).

**California Clean Air Act**

In 1988, the Legislature enacted the California Clean Air Act (CCAA or "the Act"), which declared that attainment of the California state ambient air quality standards is necessary to promote and protect public health, particularly of children, older people, and those with respiratory diseases. The Legislature also directed that these standards be attained by the earliest practicable date.

The CCAA added section 41712 to the California Health and Safety Code (HSC), which requires the ARB to adopt regulations to achieve the maximum feasible reduction in reactive organic compounds (ROCs) emitted by consumer products (note: ROC is equivalent to VOC). As part of the regulatory adoption process, the ARB must determine that adequate data exist for it to adopt the regulations. The ARB must also find that the regulations are necessary and technologically and commercially feasible. In enacting section 41712, the Legislature gave the ARB clear new authority to control emissions from consumer products, an area that had previously been subject to very few air pollution control regulations.

Section 41712 defines a consumer product as any chemically formulated product used by household and institutional consumers, including but not limited to, detergents; cleaning compounds; polishes; floor finishes; cosmetics; personal care products; home, lawn, and garden products; disinfectants; sanitizers; aerosol paints; and automotive specialty products. The definition specifically excludes other paint products, furniture coatings and architectural

coatings. Please note that aerosol paints were not included in the original definition of "consumer product" in the Act, even though aerosol paints are a large source of VOC emissions relative to the other consumer product categories. Recently, however, the Act was amended to include aerosol paints as a consumer product.

**Amendments to the California Clean Air Act to Establish Requirements for Aerosol Paints**

Two recent legislative actions amended Health and Safety Code section 41712 (hereafter referenced to as "Section 41712") to include aerosol paints in the definition of consumer products, and require specific reductions in VOC emissions from aerosol paints. Assembly Bill 2783 and Assembly Bill 1890, enacted by the Legislature in 1992 and 1993 respectively, gave the Board new authority to regulate aerosol spray paints (AB 2783, Sher; Stats. 1992, Chapter 945 and AB 1890, Sher; Stats. 1993, Chapter 1028).

AB 2783 amended the definition of consumer products to include aerosol paints as a consumer product to be regulated by the Board. The bill also permanently prohibited districts from adopting consumer product regulations which differ from ARB regulations adopted for the same purpose.

The AB 1890 amendments to section 41712 established a prescriptive emission reduction process for aerosol paints. These amendments require the ARB to:

- adopt statewide regulations on or before January 1, 1995, that will achieve at least a 60 percent emission reduction from the use of aerosol paints by December 31, 1999;

- establish interim limits prior to 1999;

- conduct a public hearing on or before December 31, 1998, on the technological and commercial feasibility of achieving full compliance with the final limits by December 31, 1999, and grant an extension of time not to exceed five years if the Board determines the 60 percent reduction is not technologically or commercially feasible by December 31, 1999; and

- ensure that the final limits for aerosol paints do not become federally enforceable prior to the effective date established by the regulations, including any extension of time, if granted.

The amendments enacted by to AB 1890 also clarified the intent of the Legislature with respect to the regulation of aerosol paints by requiring, with one exception, that limits on the emissions of reactive organic compounds from aerosol paints be set solely by the ARB to ensure that uniform standards are applicable on a statewide basis. The only exception to this requirement is any regulation that has been adopted by a district pursuant to an order of a

federal court. The aerosol paint regulation of the Bay Area Air Quality Management District (Rule 49) is the only district regulation which meets this criterion and falls within this exception.

On November 9, 1994, the ARB adopted the State Implementation Plan (SIP). The SIP serves as California's overall long-term plan for attainment of the federal ambient air quality standards. Achieving significant VOC reductions from consumer products, including aerosol coating products, is a key element of the SIP. Together with significant reductions from stationary facilities, mobile sources (e.g., cars, trains, boats), and other area sources (e.g., architectural coatings), the reductions to be obtained under the consumer products element of the SIP will help achieve attainment of the air quality standards for ozone. The VOC reductions from consumer products and aerosol coating products will also help several districts meet rate-of- progress requirements in the federal Clean Air Act (CAA). The districts which are relying on reductions from aerosol coating products to meet CAA requirements are the South Coast Air Quality Management District (SCAQMD), the San Joaquin Valley Unified Air Quality Management District (SJVUAQMD), the San Diego County Air Pollution Control District (SDCAPCD), the Sacramento Metropolitan Air Quality Management District (SMAQMD), the Ventura County Air Pollution Control District (VCAPCD), and the Mojave Air Quality Management District (MAQMD).

In the SIP, the ARB has committed to reducing VOC emissions from aerosol coating products by 60 percent by the year 1999, consistent with HSC section 41712. Moreover, additional reductions of approximately 25 percent are committed by the year 2010 (for an overall control of about 85 percent relative to uncontrolled levels). To help achieve these reductions, the ARB has committed to evaluating control strategies that employ market-based principles, special recognition label programs, and photochemical reactivity considerations.

## B. CONSUMER PRODUCTS REGULATIONS

To date, the Board has adopted two regulations to fulfill the requirements of the Act as it pertains to consumer products. The first regulation was approved in November 1989 and required a reduction in VOC emissions from antiperspirants and deodorants (the "Antiperspirant and Deodorant Regulation"). The second regulation, approved in October 1990, required a reduction in VOC emissions from 16 different categories of consumer products (the "Consumer Products Regulation"). This second regulatory action is commonly referred to as Phase I.

In January 1992, the Board approved amendments to the Phase I regulation to achieve the maximum feasible reduction in VOCs from consumer products. These amendments added 10 more categories to the consumer products regulation and are referred to as the Phase II amendments. To ensure consistency in the regulatory requirements of all the consumer products regulations, the antiperspirant and deodorant regulation was also amended during both the Phase I and Phase II rulemakings. Combined, the ARB consumer products regulations establish standards for 27 different consumer products and will result in a

30 percent reduction in emissions from all consumer products upon full implementation. The regulations are contained in Title 17, California Code of Regulations, sections 94500-94517.

The existing consumer product regulations reduce VOC emissions primarily through traditional standard setting requirements. Under this type of approach, the regulations specify maximum allowable VOC content limits (by weight percent) for individual product categories.

Although the existing regulations employ the traditional approach, they also provide flexibility to manufacturers. First, the regulations specify performance standards which must be met, but they do not specify how products are to be reformulated to meet the standards. Manufacturers are free to meet the VOC content limits however they see fit, provided their products do not exceed the limits.

Moreover, the existing regulations provide additional flexibility through the Innovative Products Provision. This provision allows the sale of products which exceed the limits but, through special formulation or packaging, emit less VOCs than a representative product which meets the applicable limit. To date, eight innovative product exemptions have been granted to manufacturers or marketers.

To provide even greater flexibility, the ARB, on September 22, 1994, adopted the Alternative Control Plan regulation. This regulation, which will soon be submitted to the Office of Administrative Law for approval, provides manufacturers subject to the Phase I and II regulations an alternative means to comply with the regulations.

**District Aerosol Paint Rules**

Prior to the AB 2783 and AB 1890 amendments, both the Bay Area Air Quality Management District (BAAQMD) and the South Coast Air Quality Management District (SCAQMD) had rules regulating aerosol paints. The BAAQMD Rule 49, "Aerosol Paint Products," was the result of a federal district court order and remains in effect. However, AB 1890 preempted SCAQMD Rule 1129, which the district is not currently enforcing and intends to rescind. A brief discussion on the district rules is given below.

Bay Area Air Quality Management District: The BAAQMD adopted Rule 49 in June 1990 in response to a federal district court order (the "Order") signed on January 10, 1990. The Order was the result of the consolidated cases of Citizens for a Better Environment v. George Deukmejian and Sierra Club v. Metropolitan Transportation Commission, et al.. The Order required the BAAQMD to adopt control measures by July 1, 1990. The control measures were required to achieve emission reductions in the BAAQMD of at least 1.0 ton per day by February 1, 1991, and 4.0 tons per day by February 1, 1993.

As a result of the Order, the ARB and the BAAQMD signed an agreement detailing the responsibilities of the two agencies. Under the terms of the agreement, the BAAQMD

agreed to adopt an aerosol paint regulation designed to achieve an emission reduction of at least 1.0 ton per day by February 1, 1991. The ARB adopted a regulation to control emissions from other consumer products that, in conjunction with the BAAQMD regulation, achieved the total required emission reduction of at least 4.0 tons per day. This regulation was subsequently rescinded by the ARB upon adoption of its statewide Phase I consumer products regulation in 1990.

In June 1990, the BAAQMD adopted Rule 49 which established VOC limits for aerosol paints. Rule 49 limited all aerosol paints to 2 grams of organic compounds per gram coating solids (67 percent VOC). Later, in August 1991, the BAAQMD amended Rule 49 and lowered the VOC standards of general paint categories from 67 percent to 60 percent or 65 percent, depending on the type of paint, in order to allow an increase in the VOC limits for products in the specialty categories. This allowed a greater variety of aerosol spray paint products to remain on the market while continuing to achieve the required 1.0 ton per day emission reduction.

Rule 49 established several other requirements to allow the district to track and enforce the regulation. These include the following:

- administrative requirements to monitor product labeling,
- record keeping requirements that require aerosol paint manufacturers to report all sales data by category and organic compound content to the Air Pollution Control Officer (APCO) every three months, and
- test methods for determining compliance that can be found in the BAAQMD Manual of Procedures, Volume III, Method 35 and 36.

As previously stated, BAAQMD Rule 49 will remain in effect since it was adopted in response to a federal court order. Rule 49 will remain in effect unless the federal court specifically takes action to authorize the BAAQMD "...to observe and enforce the state board regulation in lieu of the district regulation...," as specified in HSC Section 41712(f)(1). Therefore the adoption of a statewide aerosol paint rule will not impact the BAAQMD rule unless the federal court takes action.

South Coast Air Quality Management District: The SCAQMD adopted an aerosol paint rule, Rule 1129, in November 1990. The rule was similar to the first version of the BAAQMD Rule 49, limiting all aerosol paints to 2 grams of VOC per gram of coating solids. Once this rule was adopted by the SCAQMD, the aerosol paint industry filed three lawsuits against the District challenging the adoption of Rule 1129. The petitioners claimed that the rule was too restrictive, called for unachievable reductions in VOC content, and was not adopted in compliance with state procedural requirements. These lawsuits were consolidated into one action, Dunn-Edwards Corporation v. SCAQMD. In July of 1991, the Superior Court of Los Angeles County ruled against the SCAQMD making Rule 1129 invalid on the

basis that the District did not adequately comply with the California Environmental Quality Act in promulgating the rule.

The SCAQMD appealed the court decision and in May of 1993, the Court of Appeals reversed the decision of the Superior Court and upheld the adoption of Rule 1129. During the pendency of this case, the district had been considering whether amendments to Rule 1129 would be appropriate and had discussed proposed revisions at public workshops which would render the rule technologically feasible. These revisions included adding specialty coating categories similar to those in the BAAQMD rule, and future effective standards for 1997 and 1999 that were designed to achieve a total emission reduction of approximately 60 percent in 1999.

In part because of industry's concern about the initial Rule 1129 standards, the ARB, BAAQMD, SCAQMD, and aerosol paint industry representatives began discussions about drafting legislation to provide for a statewide rule for aerosol paints. These discussions resulted in the enactment of Assembly Bill 1890 ("AB 1890") by the Legislature, which, as described earlier, provided sole authority to the ARB to develop an aerosol paint regulation controlling VOCs and specified a 60 percent emission reduction target. AB 1890 also preempted the enforcement of SCAQMD's Rule 1129, while also requiring that ARB regulations ultimately achieve their goal of at least a 60 percent reduction in VOC emissions from aerosol paints.

In addition to the district activities described above, the United States Environmental Protection Agency (U.S. EPA) proposed on February 15, 1994, a rule for aerosol paints in the Federal Implementation Plan (FIP) for the State of California (59 FR 23263; May 5, 1994). The U.S. EPA developed the FIP pursuant to a court order, to provide for the attainment of the federal NAAQS for ozone in three California nonattainment areas. Based on the current version of the FIP, U.S. EPA would promulgate an aerosol paint rule which parallels an earlier draft version of the aerosol paint regulation that was discussed at a public workshop in the fall of 1993. However, U.S. EPA staff have indicated that it is their intent to have a rule in the FIP that is similar to the statewide rule for aerosol paints, so we expect that the final version of the FIP aerosol paint rule will mirror the final Board-adopted California aerosol paint rule. The final version of the FIP is currently scheduled to be promulgated in February, 1995. However, in January, 1995, the parties to the FIP lawsuit agreed to delay actual implementation of the control measures in the FIP (including the FIP aerosol paint rule) until 1997. Negotiations are also underway to delay the promulgation of the FIP until some future date after February, 1995.

# II.

## EXECUTIVE SUMMARY

### A. PROPOSED AEROSOL PAINT REGULATION

**Why are we proposing to regulate aerosol paints?**

We are proposing a regulation for aerosol paints because the emissions of aerosol paints contribute to California's air quality problems and need to be reduced, and to fulfill the requirements of HSC section 41712.

Based on the Air Resources Board 1991 emissions inventory, aerosol paints contribute about 31 tons per day of VOC emissions in California, representing approximately 12 percent of the VOC emissions from all consumer products. As mentioned previously, aerosol paints were not regulated earlier, along with other consumer products, because they were specifically excluded from the definition of "consumer products" in the Health and Safety Code at the time of the adoption of the Phase I and Phase II regulations. Recent Legislation (AB 2783, Sher; Stats. 1992, Chapter 945, and AB 1890, Sher; Stats. 1993, Chapter 1028) provided ARB with new authority to regulate aerosol paints by adding aerosol paints to the definition of consumer products. This legislation requires the ARB to adopt a regulation to achieve the maximum feasible reduction in emissions from aerosol paints and outlines certain requirements to fulfill this mandate. Specifically, the ARB is required to: 1) adopt a statewide regulation by January 1, 1995, which is designed to achieve at least a 60 percent emission reduction by December 31, 1999; 2) conduct a hearing on or before December 31, 1998, to review the technological and commercial feasibility of the December 31, 1999 standards; and 3) establish interim standards prior to December 31, 1999.

Our efforts in regulating aerosol paints will also assist districts in fulfilling their obligations under the federal Clean Air Act (CAA) and the recently Board-approved 1994 California State Implementation Plan (SIP). The CAA requires all areas designated as moderate to extreme nonattainment for the federal ozone standard to develop Rate-of-Progress Plans. These plans must show progressive reductions in emissions until attainment is achieved. These commitments can be met by the districts through reductions in VOC emissions from State adopted regulations, such as the proposed Aerosol Paints regulation. In addition, the "near term" program of control measures in the SIP for ozone attainment relies on additional emission reductions from consumer products, including aerosol paints. Although all districts in California will benefit to some degree under the aerosol paint regulation, the districts which are specifically relying on emission reductions from aerosol

paints to help them demonstrate attainment of the federal ozone standard are the Mojave Desert AQMD, Sacramento Metropolitan AQMD, San Diego County APCD, San Joaquin Valley Unified APCD, South Coast AQMD, and Ventura County APCD.

**What are the goals of the aerosol paint regulation?**

The proposed regulation is designed to meet the following objectives:

(1) meet the requirements of HSC section 41712;

(2) assist districts in meeting their 15% rate-of-progress plans and demonstration of attainment for the federal ambient air quality standard for ozone; and

(3) provide flexibility to aerosol paint manufacturers and minimize economic burden to the industry.

**How did the staff develop the proposed regulation?**

This proposed regulation was developed over a two year period during which we worked closely with the affected aerosol paint industry, trade associations, and other governmental agencies. One of our first actions was to conduct a comprehensive survey of aerosol paint manufacturers selling products in California. The survey requested data on the product formulations and sales of all products sold in California in 1992. Battelle Institute processed the survey data and their summary is included as an appendix to the Technical Support Document, Volume II. In addition to the survey data, research was done for each aerosol paint category proposed for regulation, through the use of technical information such as Material Safety Data Sheets, industry publications, product catalogs, and extensive discussion with aerosol paint manufacturers.

We conducted six workshops to discuss various versions of the draft regulation with interested parties to provide full public process during the development of the proposed regulation. The proposed amendments to the ACP to include aerosol paints were also discussed both during the development of the ACP regulation and at the aerosol paint workshops conducted in late 1994 and January 1995. The workshops were all well attended, with representatives from industry, trade associations, aerosol paint suppliers, the SCAQMD, the BAAQMD, and the Department of Toxic Substances Control. Besides the workshops, we have consulted with individual manufacturers and industry representatives, having several individual conferences and hundreds of telephone conversations over the past two years.

Several manufacturers of aerosol paint have been actively involved in the regulatory process; these include: Sherwin-Williams, Plasti-kote, Aervoe-Pacific Company, Forrest Paint Company, Seymour of Sycamore, Flecto Paint Company, and others. Sherwin-Williams (which is the parent company of Krylon, Duplicolor, and Sprayon products), has been the most active, attending all the public workshops and meeting individually with ARB staff on

several occasions. Sherwin-Williams accounts for about half of the aerosol paint market. Associations that have been involved include the National Paint and Coatings Association (NPCA), the Western Aerosol Information Bureau (WAIB), and the California Paint Council (CPC).

**Who will be affected by the proposed regulation?**

The proposed regulation will affect any person who sells, supplies, offers for sale, applies, or manufactures for use in California any aerosol coating product subject to the VOC standards. This includes manufacturers, distributors, wholesalers, retailers, and aerosol paint users. The regulation is intended to apply to both household and industrial uses of aerosol paints.

However, it should be noted that a specific exemption is provided for noncommercial application of aerosol paint. This exemption was provided to avoid enforcement actions against home use of non-complying aerosol paint. Thus, a homeowner cannot be issued a notice of violation if he or she uses an old can of paint that may have been in their garage or was purchased on vacation out of state. This exemption should have minimal impacts on the emission reductions since we expect that most homeowners will purchase aerosol paints at local retail outlets that will be required to only sell complying aerosol paints. This exemption was not extended to commercial application of aerosol paints to avoid the possibility of an industrial user purchasing large quantities of aerosol paints out of state for use in California.

**What is the proposed regulatory structure?**

The proposed statewide aerosol coating products regulation is similar in format to the comprehensive consumer products regulation. The proposed regulation includes two tiers of limitations on the VOC content of 35 different categories of aerosol paints and related products. The effective date of the initial VOC standards for all categories is January 1, 1996, with future effective standards proposed for December 31, 1999. The standards would prohibit the sale, supply, offer for sale, application, or manufacture for use in California of any aerosol coating product in excess of the limits specified. The standards are set on the basis of the percentage of VOC by weight.

In addition to establishing VOC content limits, the proposed regulation contains other provisions to help with the implementation and effectiveness of the regulation. These provisions include an eighteen-month sell-through period for noncomplying products, restriction on the use of toxic air contaminants and ozone-depleting compounds, requirements for multi-component kits, administrative requirements for labeling and reporting information, exemptions for specific products and for products that are manufactured for use outside California, and compliance test methods.

The proposed regulation also includes provisions to implement the requirements of HSC section 41712(f)(3) regarding the technological and commercial feasibility of the 1999

VOC limits. The proposed regulation requires the ARB to conduct a public hearing by December 31, 1998, on the technological and commercial feasibility of manufacturers achieving full compliance with the 1999 VOC limits. If the Board determines that it is not technologically or commercially feasible to achieve one or more of the specified VOC limits by December 31, 1999, then the Board may chose to (1) grant extensions for up to five years, (2) establish interim limits, and/or (3) modify the final compliance limits as appropriate provided the final compliance limits achieve at least a 60 percent reduction in VOC emissions, calculated from the 1989 baseline year. It is important to note that HSC 41712 does not require the ARB to address the commercial and technological feasibility of the 1999 VOC limits until the hearing is conducted on or before December 31, 1998. The regulation also includes a provision that requires manufacturers of the affected aerosol coating products to submit specific information to the Executive Officer regarding the research and development efforts undertaken to achieve the December 31, 1999 VOC limits. This information is one of the many components that will be used by the ARB staff to determine if the 1999 VOC limits are technologically and commercially feasible.

To provide flexibility to aerosol paint manufacturers, the ARB staff is proposing to include the aerosol paint regulation in the recently approved Alternative Control Plan (ACP). Based on comments received at the January 19, 1995 workshop, we are proposing that ACPs for aerosol coating products would operate separately from ACPs approved for products subject to the ARB's consumer product regulations. Participation in the ACP program will allow manufacturers to achieve emission reductions equivalent to the emission reductions required under the regulation by "averaging" the emission reductions over any combination of aerosol paints. This would allow, for example, an aerosol paint manufacturer to keep a formulation with a VOC content above the VOC standard in the regulation, as long as this product was "offset" with a formulation that has a VOC content below the applicable VOC content limit. Under the ACP, the manufacturer can choose the aerosol paint products to be reformulated, the time frames during which such reformulations will occur, and the extent of reduction in VOC content for each product selected to be in an approved ACP compliance plan. A more detailed discussion of the inclusion of the proposed regulation in the ACP is provided later in this document.

Finally, the proposed regulation provides for variances whereby any person who cannot comply with the requirements of the proposed regulation, because of reasons beyond the person's reasonable control, could apply to the Executive Officer for a variance. The provision would allow the Executive Officer, upon making certain findings, to issue a variance allowing the person additional time to comply with the regulation.

**How were the 1996 VOC limits in the proposed regulation established?**

The 1996 VOC limits in the proposed regulation are primarily based on the Bay Area Air Quality Management District's (BAAQMD) aerosol paint regulation. However, the proposed standards underwent extensive discussion at both the formal workshops and informal meetings with industry representatives. Based on these discussions and on additional

technical data that was reviewed by staff, the proposed regulation contains some minor differences from the BAAQMD regulation. This is discussed later in this document. The BAAQMD's aerosol paint regulation was adopted in June of 1990, and aerosol paint products meeting these standards have been sold for the past several years. Therefore, the technology necessary to meet the proposed 1996 standards in the ARB regulation is well known. This is further substantiated from the information supplied to the ARB in the survey conducted to collect data on products sold in California. For each 1996 standard being proposed, there are products available that meet the proposed standard, and in some cases, these products represent a significant share of the market.

**How were the 1999 limits in the proposed regulation established?**

The December 31, 1999 limits were designed to achieve the minimum 60 percent reduction in emissions relative to the 1989 baseline year, as required by the Health and Safety Code section 41712(f). The limits were based on a draft SCAQMD aerosol paint regulation that was also designed to achieve a 60 percent reduction in emissions. The limits necessary to achieve a 60 percent emission reduction in 1999 were calculated based on data on the average VOC content of each aerosol paint category in 1989. This data was available from a 1989 National Paint and Coatings Association (NPCA) survey. In addition, we assumed that the sales of aerosol paint would remain constant from 1989 to 1999. Some industry representatives have argued that sales have dropped in California since 1989, making less stringent 1999 standards possible. However, technical data available to ARB staff has not been adequate to quantify the extent to which this has occurred. Based on the ARB Emissions Inventory, the emissions in 1991 were estimated to be about 31 tons per day, similar to the estimated emissions of 30 tons per day in 1989. It is also expected that sales will increase in the future as population increases in California. We intend to revisit this issue at the 1998 hearing on the feasibility of the 1999 standards when more current data is expected to be available.

**How will ARB staff monitor the progress in achieving the 1999 standards?**

ARB staff will monitor aerosol paint manufacturer's progress toward achieving the 1999 standards through the following activities:

- formal and informal meetings/workshops with industry in preparation for the public hearing required prior to December 31, 1998 to review the commercial and technological feasibility of the 1999 standards;
- a survey of the VOC content and sales of products sold in 1997;
- review of research and development reports submitted to ARB; and
- discussions with industry

As required by the Health and Safety Code, the proposed regulation requires that the Air Resources Board conduct a public hearing on the technological and commercial feasibility of achieving compliance with the December 31, 1999 VOC limits. The hearing is required to be held on or before December 31, 1998, to allow industry sufficient time to respond to any changes in the proposed VOC limits. During the hearing, it is anticipated that testimony will be presented to the Board by the industry and other interested parties, in addition to staff's assessment of the ability of manufacturers to meet the 1999 standards.

To provide ARB staff with the information necessary to make a recommendation as to whether or not the VOC limits are feasible, several reporting requirements are included in the proposed regulation. First, manufacturers of aerosol paints are required to submit a survey of sales, product formulation and other information for all their products for the 1997 year. The regulation also authorizes the ARB to conduct surveys at other times. Second, the proposed regulation requires aerosol paint manufacturers to submit by January 1, 1998, a written update of the research and development efforts undertaken to achieve the December 31, 1999 VOC limits. This report is to include detailed information of the formulations and valve systems tested, the testing protocols used, the results of the testing, and listing of all products complying with the 1999 standards and their manufacturing cost. This information will be reviewed by ARB staff in order to assist them in making a recommendation as to the feasibility of the 1999 standards at the previously mentioned public hearing.

Finally, ARB staff will be in contact with manufacturers in order to track their progress toward meeting the 1999 standards, and to follow-up on the review of the research and development reports. ARB staff will also hold consultation meetings with any manufacturers wishing to discuss the results of their research and development.

**How will manufacturers comply with the proposed regulation?**

Three basic reformulation methods, or a combination thereof, are available to manufacturers to comply with the VOC standards in the proposed regulation. The first method is to increase the solids content of the product, displacing some of the solvent in the formulation. The second method is to use a waterborne formulation in which water functions as one of the primary solvents. The final method is to replace some or all of the hydrocarbon propellants used in solvent-borne aerosol coating products with hydrofluorocarbon 152a (HFC-152a). This method is not widely used now, in part, due to the cost of HFC-152a, but is expected to be more cost-effective in the future. These three reformulation methods, or a combination thereof, can be used to reformulate aerosol paints to meet the initial (January 1, 1996) VOC standards. At this time, it is uncertain which reformulation options will be available to achieve compliance with the final (December 31, 1999) VOC standards. We expect that technological developments that occur between now and the final compliance date will significantly affect how aerosol paints are reformulated to meet the 1999 standards.

It is important to note that another option available to comply with the regulation is the alternative compliance plan (ACP). The ACP would allow manufacturers more flexibility in the individual products that they reformulate, as mentioned earlier.

**What are the expected environmental impacts from the proposed regulation?**

ARB staff has conducted an analysis of the environmental impacts of the proposed aerosol paint regulation. Based on our analysis, we have determined that the aerosol paint regulation will not have any significant adverse impacts on the environment. Rather, the regulation will have positive environmental impacts, because it will result in a reduction in VOC emissions. We conducted our analysis with consideration of the potential impacts on air quality, water quality, and landfill loading. As a part of our rule development process, we also investigated the potential negative environmental impacts that some industry representatives suggested may inadvertently occur as a result of the aerosol paint regulation. These are discussed in more depth in the following paragraphs.

The proposed rule contains two tiers, with the first tier limits effective January 1, 1996 and the second tier limits effective December 31, 1999. As calculated by the Air Resources Board staff, implementation of the first tier standards will result in approximately a 12 percent reduction in emissions, or about a 3 ton per day reduction in VOC emissions from aerosol paints in 1996. The limits for the second tier standards are intended to achieve about a 18 tons per day emission reduction, or an overall 60 percent reduction from the 1989 VOC emissions from aerosol coatings, as required by AB 1890.

One concern that industry members raised was the possibility that a regulation limiting the VOC content in aerosol paints will cause consumers to switch to solvent-borne, nonaerosol coatings. A related concern is that if high VOC aerosol paints are not available, consumers may convert to airbrushes or spray guns, resulting in increased emissions. Both of these concerns stem from the fact that nonaerosol coatings sold in volumes of one quart (or one liter) or less are presently exempt from district VOC regulations. Therefore, it is reasoned by industry representatives that there will be an increase in VOC emissions from their use, and from the use of solvent for thinning and clean-up of these coatings. However, based on our analysis, we do not expect this negative environmental impact to occur.

In regard to the conversion from aerosol paints to brush-on paints in response to the implementation of the aerosol paint regulation, our analysis indicates that this will not occur, for several reasons. First, aerosol coatings complying with the first tier standards (effective January 1, 1996) presently available in all categories. The second tier standards (effective December 31, 1999) are subject to a hearing by the Air Resources Board by December 31, 1998 to determine their technological or commercial feasibility. Therefore, as found with the first tier standards, we do not expect a switch to high-VOC solvent-borne brush-on coatings in response to the second tier standards as their feasibility must be demonstrated before the 1999 standards go into effect. Additionally, conversion in many cases would involve additional expense and in some instances would be technically infeasible.

For example, spray guns or "air-brushes" require the purchase of costly equipment, and brush-on paints may not be appropriate for painting complex shapes or when a smooth finish without brush strokes is desired. We also compared potential VOC emissions from the various alternatives to determine the impact on emissions in the unlikely case consumers did convert to alternative application systems, including brush-on solvent-borne coating and water-borne coatings, spray gun applied coatings, and airbrush applied coatings. We found that for most alternative scenarios identified, conversion from aerosol coatings actually resulted in lower emissions because, in many cases, brush-on or spray gun applied paints are water-borne or lower in VOC than aerosol paints.

Another concern that industry members raised was the possibility that lower VOC aerosol coatings will be less efficacious, resulting in more frequent recoating and increased overall emissions. Our analysis shows that this negative environmental impact will not occur. The VOC standards have been specifically determined for each of the 35 categories such that manufacturers are not limited to specific resins or carrier technologies. Manufacturers may choose to meet the standards using whatever available technology best meets their requirements and the requirements of the market. We do not believe the contention that a high-VOC, relatively low solids product is always the best coating. In fact, higher solids coatings are generally considered to be higher quality coatings (Johnsen, M. A., 1982). There is a substantial amount of literature indicating that a high-quality, low-VOC coating is well within manufacturers present formulating capabilities.

Finally, concerns were raised by industry members that methylene chloride (MC), a non-VOC but a toxic air contaminant, would be used on a large scale to comply with the VOC limits in the regulation. Because of the health issues associated with MC, we consider the possibility for increased used of MC as a potential adverse environmental impact. Under the California Environmental Quality Act (CEQA), we are required to mitigate potential adverse impacts that may occur as a result of our regulation. To address this issue, we have included a provision in the aerosol paint regulation that will require the calculated VOC concentration in aerosol paints to be determined using the combined weight of VOCs and MC. We believe that this will discourage the increased use of MC as a way to comply with the regulation. For further discussion on MC, see the "Initial Statement of Reasons," Volume II, Chapter IX.

Other potential negative impacts considered include increased use of hazardous air pollutants and other toxic air contaminants, impact on global warming, impact on stratospheric ozone depletion, and impacts on water quality and solid waste disposal. No negative environmental impacts are expected to occur in these areas.

**Is the proposed regulation technologically and commercially feasible?**

Health and Safety Code section 41712 requires that all consumer product regulations adopted by the Board must be technologically and commercially feasible. The amendments to section 41712 require the ARB to develop a regulation that will achieve at least a 60 percent

reduction in emissions from aerosol paints by 1999, relative to the 1989 emissions baseline. The amendments also specifically required the staff to develop interim standards that are technologically and commercially feasible and to conduct a hearing prior to December 31, 1998 to determine the technological and commercial feasibility of achieving full compliance with the December 31, 1999 VOC standards. To assess the commercial and technological feasibility of the 1996 VOC standards, we relied on the criteria that were established during the development of the Phase I and II consumer product standards. These criteria were also used to develop the aerosol paints regulation.

For most of the aerosol paint product categories being proposed for control, there are products in the marketplace that currently meet the proposed standards. This demonstrates that the proposed 1996 standards are technologically feasible. In addition, the current market presence of these complying products indicates that they can be produced in quantities to meet the basic market demand for aerosol coating products. Since the criteria for commercial feasibility used in this rulemaking is based on the ability of complying products to meet basic market demand, we believe the proposed interim 1996 VOC standards are technologically and commercially feasible.

In contrast to the proposed 1996 standards, there are no aerosol paints currently in the market that meet the proposed 1999 standards. In adopting the amendments to section 41712, the Legislature recognized that future-effective standards are necessary for emission reductions, but significant research and development may be necessary to meet those standards. Section 41712 therefore requires the Board to hold a public hearing in 1998, before the 1999 standards become effective, to decide if these standards are achievable within this timeframe. We will work closely with industry representatives to help foster the necessary innovations and to monitor their progress in developing the new products of the future that will meet these lower VOC limits.

**What are the economic impacts of the proposed regulation?**

To estimate the costs of the proposed regulation, we conducted a survey of aerosol paint manufacturers. The survey was used to estimate the costs of complying only with the proposed 1996 VOC limits in the regulation. The cost of complying with the 1999 VOC limits was not estimated because we cannot predict the technological developments that will occur prior to 1999, and because the 1999 standards may be modified or delayed depending on the outcome the 1998 hearing required to review these standards.

Based on the cost survey, the cost of complying with the 1996 standards in the proposed regulation is expected to range from zero to 3.6 million dollars for a typical manufacturer (using a 10 year amortization of one-time costs). The variation in this estimate reflects the diversity of the industry, with the higher costs associated with larger companies with more products. The total cost to the aerosol paint industry is estimated to be between $12 and $13 million dollars annually. The cost-effectiveness, which demonstrates the overall cost-of-control is estimated to be $5,700 to $6,400 dollars per ton, and is in the range of other

control measures adopted by the ARB and the districts in California. It is expected that the cost of the regulation would be passed on to consumers to some degree, depending on the willingness of consumers to pay more for aerosol paints. A survey of aerosol paints sold inside the BAAQMD, which has a regulation similar to the proposed ARB regulation, revealed that aerosol paints cost about 6 percent more in the district compared to products with the same label sold outside the district. In addition, we estimated the cost increase per can to be from $0.30 to $0.34 per unit assuming all of the costs were passed on to consumers, a worst case scenario. A more detailed discussion is included in the "Initial Statement of Reasons," Volume II, Chapter VIII."

**What are the impacts of the proposed regulation on employment, business creation and expansion, and competitiveness with businesses outside of California?**

We conducted an analysis of the companies that provided data in our cost survey to determine if these companies would be able to absorb the added costs of regulation. Based on this analysis, these companies would not experience a significant change in their "return on owners' equity (ROE). According to our analysis, the average profitability of typical manufacturers changed by less than 3 percent. Based on this analysis, we do not expect the regulation to have a significant impact on employment, or business creation, elimination , or expansion. We also do not expect the regulation to have a significant impact on the competitiveness of California businesses compared with those outside California. This is because all companies that sell aerosol paints in California would have to meet the proposed requirements in the regulation, whether located in California or outside California. According to the ARB Aerosol Paint Survey and additional data collected subsequent to the survey, only 13 of the 62 businesses reported to sell aerosol paints were located in California. However, while staff has concluded that overall, business are expected to be able to absorb the costs of the proposed regulation without significant adverse impacts on their profitability, there is the possibility that some individual businesses may be adversely affected by this regulatory action. Therefore, it is possible that this regulation may have a significant adverse impact on some businesses that not in a market position to invest monies to develop new low VOC products as well as other manufacturers or to absorb the increased cost resulting from their compliance with the regulation.

**What issues have arisen in the development of the proposed regulation?**

Three major issues have arisen during the development of the proposed regulation: the VOC limits for general use lacquer aerosol paints, the provisions limiting MC, and the future effective 1999 VOC limits in the regulation. These issues are briefly discussed below. A more detailed discussion is included in the "Initial Statement of Reasons," Volume II, Chapter IX.

There have been several requests to include a higher VOC limit for general use pigmented lacquer aerosol paints in the proposed regulation. This is because pigmented lacquers cannot currently meet the proposed 60 and 65 percent VOC standards for flat and

nonflat coatings, respectively. A permanent higher VOC limit was not added to the regulation because aerosol paints using other resin systems (collectively referred to as "enamels") are available to meet the needs of consumers. In addition, the current aerosol paint regulation accommodates lacquers under several of the specialty VOC standards in the proposed regulation, where these products were found to be necessary. However, some members of industry have pointed out that they need more time to develop alternatives to their lacquer products. They have also pointed out that some paint users, including semi-professional hobbyists, prefer lacquers for some uses. To address these concerns, and reduce the economic impact of the regulation on lacquer manufacturers, a provision has been included in the regulation that would allow manufacturers to sell pigmented lacquers up to 80 percent VOC for two years beyond the January 1, 1996 date of the initial VOC standards.

The provisions designed to limit the use of MC have also been the subject of many industry comments. These provisions were included in the regulation to prevent manufacturers from dramatically increasing the use of MC, a toxic air contaminant which is also a non-VOC and could be used in paint formulations to comply with the proposed VOC limits. In earlier drafts of the regulation, a provision was included which would have allowed no new uses of MC. However, numerous commenters were concerned that this approach would provide an unfair economic advantage to companies that currently use MC, since it is less expensive to make a complying aerosol paint using MC than switching to a higher solids or water-borne formulation. In response to these comments, the provision was modified to allow the use of MC, but to limit the allowable weight percentage of MC to product specific VOC limits in the regulation. In other words, the combined weight of MC and VOC content cannot exceed the VOC standard for a given product. This provision removes the incentive to use MC and addresses the fairness issues raised by manufacturers. It is also consistent with the BAAQMD Rule 49 for aerosol paints.

The December 31, 1999 standards in the proposed regulation (when combined with the 1996 standards) are designed to achieve the 60 percent emission reduction as required by the Health and Safety Code relative to the 1989 baseline year. Manufacturers have expressed concern that these standards are not currently achievable. As required by the Health and Safety Code, the proposed regulation requires the ARB to hold a public hearing at least a year prior to the effective date of these standards. Prior to this hearing, we will be working closely with industry representatives to help foster innovations and to monitor industry's progress toward meeting these standards. At the hearing, the Board will evaluate the industry's efforts, review the commercial and technological feasibility of the 1999 standards and, if necessary, revise these standards to achieve the maximum feasible reductions in VOC emissions.

Some manufacturers have also argued that since the sales of aerosol paints have dropped since 1989, emission reductions have already been achieved and, therefore, the 1999 standards are more stringent than necessary. ARB staff calculated the 1999 standards to achieve a 60 percent emission reduction assuming that sales are the same in 1999 as in 1989.

While it is possible that sales may have dropped since 1989, ARB staff has not been able to confirm such a decline with reliable data. Considering the projected growth in the California, it is also possible that the sales may also increase such that 1999 levels are equal to or greater than 1989 levels. A survey that will be conducted by the ARB staff in 1997 will help to track any trends in sales.

**How Does the ARB Proposal Differ than the Bay Area Regulation?**

There are several differences between the proposed ARB regulation and the Bay Area Air Quality Management District's regulation (the "Bay Area regulation"). However, the overall structure and initial VOC limits for most aerosol paints are the same.

Regarding the VOC limits, the most significant difference in the regulations is the fact that the ARB regulation proposes future effective limits for all categories on December 31, 1999, while the Bay Area regulation has no future effective limits. Additionally, there are some minor differences in the initial VOC limits proposed based on information in the ARB Aerosol Paint Survey and technical information provided by manufacturers of these products, which indicates that adjustments are necessary. In addition, the ARB regulation allows for a limited 2 year 80 percent VOC standard for general use pigmented lacquers to allow a manageable phase-out of this category.

The ARB regulation also differs from Bay Area Rule 49 in that it provides an 18-month "sell-through" period to allow noncomplying products manufactured before the effective date of the VOC limits to be sold. It was not feasible to include a sell-through period in Rule 49 due to the time constraints specified in the federal court order.

The provisions regarding the use of toxic and ozone depleting compounds are also different. The ARB regulation limits the use of perchloroethylene and ozone depleting compounds to existing uses, and counts methylene chloride as a VOC for the purposes of determining compliance with the VOC limits. The Bay Area regulation does not exempt these compounds from the definition of VOC, in effect, treating these compounds the same as other "VOC's."

The ARB regulation also requires that a survey of sales and VOC content be submitted in 1998, and requires reports from manufacturers on the results of research and development efforts. The Bay Area regulation requires quarterly reports of sales and VOC content.

**How will the aerosol paint regulation affect existing rules?**

The adoption of the proposed aerosol paint regulation will not affect either BAAQMD Rule 49 or SCAQMD Rule 1129, due to the provisions of AB 1890 (Sher; Stats. 1993, Chapter 1028). AB 1890 amended Health and Safety Code section 41712 to establish a prescriptive emission reduction process for aerosol paints. The amendments pursuant to

AB 1890 also clarified the intent of the Legislature with respect to the regulation of aerosol paints by requiring, with one exception, that limits on the emissions of reactive organic compounds from aerosol paints be set solely by the ARB to ensure uniform standards are applicable on a statewide basis. The only exception to this requirement is a provision that exempts from this prohibition, any regulation that has been adopted by a district pursuant to a federal court order. Consequently, due to the provisions action of AB 1890, adoption of the aerosol paint regulation by the ARB will not affect BAAQMD Rule 49 because their aerosol paint regulation was developed as a result of a federal court order. In the case of SCAQMD Rule 1129, the statewide aerosol paint rule will also not affect the SCAQMD Rule 1129, since this rule was preempted from enforcing this rule by AB 1890. The SCAQMD is currently not enforcing Rule 1129 and is planning to rescind it in early 1995.

**How will federal activities impact the aerosol paint regulation?**

The 1990 amendments to the federal Clean Air Act (CAA) require the U.S. EPA to study and regulate emissions from consumer and commercial products (See CAA, section 41712). The amendments did not preempt the states from regulating these products but did require the U.S. EPA to study the VOC emissions from consumer and commercial products and establish a list of the products which are responsible for at least 80 percent of the total reactivity adjusted VOC emissions. No later than 2 years after the list is published, U.S. EPA is required to divide the list into 4 groups and must regulate one group every 2 years until all 4 groups are regulated. Under the CAA, consumer and commercial products include both the "traditional" consumer products as defined in the California Clean Air Act plus many other solvent sources such as automotive refinishing operations and industrial solvent cleaning - sources that under California law are regulated by the local districts. We do not expect the activities undertaken by U.S. EPA to implement the requirements of CAA to impact our efforts for aerosol paints in the near term. The U.S. EPA has yet to complete the study and it is likely that any regulation adopted by the U.S. EPA will be implemented long after our regulation has taken effect. It is also likely, that any rule adopted by U.S. EPA will mirror our proposed rule or be less stringent. It is our intention to work closely with U.S. EPA as they fulfill their obligations pursuant to the CAA requirements to encourage them to adopt regulations that are similar to California's regulations whenever possible.

Recently the U.S. EPA issued a revision to the definition of VOC to add parachlorobenzotrifluoride and volatile methyl siloxanes to the list of compounds excluded from the definition of VOC. The basis for this action is the U.S. EPA's findings that these compounds have negligible contribution to tropospheric ozone formation. (59 FR 50693; October 5, 1994). We intend to evaluate the appropriateness of classifying these compounds, and certain other compounds currently under consideration by the U.S. EPA, as negligibly photochemically reactive. Whenever possible, we endeavor to be consistent with the U.S. EPA's VOC definition. However, before revising the definition of VOC in the proposed aerosol paint regulation, we must undertake our own analysis to determine if the exemption is appropriate for California. Once our analysis is complete, we will propose modifications to the aerosol paint regulation if appropriate.

**How does this proposed regulation fit into the State Implementation Plan (SIP)?**

The proposed aerosol paint regulation helps to fulfill the near term commitments in the SIP for aerosol paint. The SIP, intended to satisfy the requirements of the federal Clean Air Act for ozone nonattainment areas in California, was approved by the Board on November 15, 1994, and is now being considered for approval by the U.S. EPA. The consumer product component of the State Implementation Plan (SIP) is a multifaceted program composed of "near-term," "mid-term," and "long-term" measures. The near-term SIP measures are comprised of our existing consumer product regulations, the Alternative Control Plan (ACP), and the aerosol paint regulation. The reductions from the aerosol paint regulation are consistent with the commitments in the SIP.

**What are ARB staff's future plans for aerosol paints?**

After the adoption of the aerosol paint regulation, ARB staff plans to monitor the progress of aerosol paint manufacturers in meeting the 1999 future effective standards. This will be accomplished through product surveys, review of required research and development reports, and through interaction with industry contacts. We expect this to proceed similarly to how we develop regulatory proposals, with both informal and formal meetings with the affected industry.

In addition to the near term reduction programs for aerosol paints in the SIP, the ARB has committed to further reducing VOC emissions from aerosol paints by 25 percent relative to uncontrolled levels in the year 2010. To help achieve these additional reductions, the ARB has committed to evaluating control strategies that employ market-based principles and photochemical reactivity considerations. Together with the proposed regulation and near term programs, these long-term programs will help achieve an overall reduction in VOC emissions from aerosol paints of about 85 percent relative to uncontrolled emissions in the year 2010.

ARB staff also plan to investigate the feasibility of developing a "special recognition" labeling program that would reward manufacturers that market products below the required VOC level.

## B. PROPOSED AMENDMENTS TO THE ALTERNATIVE CONTROL PLAN (ACP)

**What is the Alternative Control Plan (ACP) Regulation?**

On September 22, 1994, the Board approved the ACP regulation, which was developed with cooperation from consumer product manufacturers and the U.S. EPA over two and a half years. The ACP regulation is a voluntary, market-based regulation which employs the well-established concept of an aggregate emissions cap or "bubble." An emissions bubble places an overall limit on the aggregate emissions from a group of products, rather than placing a limit on the VOC content or emissions from each individual product. As such, the ACP regulation supplements the existing consumer product regulations, providing an

unprecedented level of flexibility to participating manufacturers. By design, the ACP will provide this additional flexibility while also being equivalent to the existing regulations in reducing emissions.

Manufacturers who voluntarily choose to enter the ACP program would select the products and formulate a detailed ACP bubble program ("ACP plan") for those products. Approval of an ACP plan would be contingent on whether it satisfactorily meets the proposed approval process requirements. An approvable ACP plan must demonstrate that the total VOC emissions under the bubble would not exceed the emissions that would have resulted had the products been formulated to meet the VOC standards. In addition, the proposed plan must be based on accurate and enforceable records of ACP product sales in California to ensure that all emission reductions will be real and quantifiable.

Once approved, the manufacturer must sell its products in accordance with the conditions contained within the ACP plan. Under an approved ACP plan, the manufacturer could sell products that exceed the VOC standards specified in the existing regulations, provided that the emissions from these high-VOC products will be sufficiently offset by the emissions from products reformulated to "overcomply" with the VOC standards. Overall, compliance with approved ACP plans will ensure that the total VOC emissions from the selected products will be no greater than the aggregate emissions that would have occurred from those products had they been reformulated to meet the existing VOC standards.

**Why are we proposing, for the Board's consideration, the amendments to the ACP regulation to allow aerosol coatings to be included in the ACP?**

We are proposing to amend the ACP regulation to allow manufacturers to obtain Executive Officer approval of ACP plans for aerosol coating products. These aerosol coating product ACPs would operate separately from ACPs approved for products subject to the consumer products regulation (Title 17, California Code of Regulations, Division 3, Chapter 1, Subchapter 8.5, Article 2, sections 94507-94517). In other words, aerosol coating products and consumer products would not be allowed to be sold under the same ACP and emissions averaging and the trading of Surplus Reduction Credits would not be allowed between ACPs for aerosol coating products and ACPs for other regulated consumer products. This bifurcation of the ACP programs is proposed to address the competitiveness concerns raised by small and one-product aerosol coatings manufacturers during the rulemaking process. At the January 19, 1995 workshop, manufacturers who produce both consumer products and aerosol coating products did not object to the proposal to bifurcate the ACP program for aerosol coatings and other consumer products.

We are proposing to include aerosol coating products in the ACP regulation for several reasons: (1) to provide manufacturers of aerosol coatings the same, higher degree of compliance flexibility afforded to manufacturers of other consumer products subject to the existing regulations, (2) to achieve equivalent emission reductions by utilizing market forces, and (3) to lower the manufacturers' overall cost of reducing VOC emissions from aerosol

coating products, thereby reducing overall societal cost impacts to consumers. We believe that these objectives can be achieved through the effective use of emissions averaging that would be allowed under the proposed ACP.

Although the approach employed by the proposed aerosol coatings regulation is relatively simple to implement, its use of market forces is not necessarily maximized. Inclusion of the proposed regulation in the ACP is intended to harness these market forces. By using market forces in a regulatory program such as the ACP, the ARB can obtain equivalent emission reductions from aerosol coating products, while providing greater flexibility to manufacturers at lower overall compliance costs.

The ACP would provide greater flexibility to manufacturers because it would be a voluntary alternative to meeting the VOC standards for each and every product. The ACP also would provide additional flexibility by allowing manufacturers to choose the appropriate combination of reformulations using the concept of emissions averaging to meet a specified ACP emissions limit.

If aerosol coatings are included in the ACP program, a manufacturer of aerosol coating products will have the opportunity to determine the appropriate combination of available emission reduction programs for its products that will minimize overall compliance costs. Ultimately, regulated manufacturers may find that the lowest overall costs result from a combination of compliance with the VOC standards for some products and the ACP requirements for the remaining products.

The ACP uses the concept of emissions averaging, sometimes known as emissions bubbling. This concept has been used in various environmental regulatory programs for years and has recently been in the forefront of air pollution regulatory programs. The reader is referred to the staff report for the ACP regulation (ARB, August 1994) for a complete discussion on local, state, and federal programs using emissions bubbling and how these programs provide economic and manufacturing benefits to regulated industries and consumers.

Under the ACP, emissions bubbling will achieve cost savings for manufacturers by enabling them to determine which product lines will yield the most cost-effective emission reductions. Because of this flexibility, the ACP provides an inherent economic advantage in comparison to command-and-control strategies. Lower overall costs are further ensured by the fact that entry into the ACP program is voluntary. Therefore, all participating manufacturers will have determined, prior to entering the program, whether the ACP program will result in clear benefits, such as manufacturing flexibility, economic advantages, and lower overall costs to themselves.

**Will inclusion of the proposed regulation in the ACP impact the anticipated emission reductions?**

As noted previously, the ACP is designed to achieve equivalency with the existing consumer product regulations and the proposed aerosol coating products regulation. That is, the ACP is designed to limit VOC emissions from aerosol coating products under approved emission bubbles to no more than the emissions that would have occurred from the products under the proposed VOC standards without the ACP. Consequently, even if all manufacturers of aerosol coating products were to operate under approved ACPs, the total potential emission reductions from the implementation of the ACPs would be the same as those from the proposed aerosol coatings regulation, about 18 tons per day by the year 1999.

**Will inclusion of aerosol coatings in the ACP have potential adverse environmental impacts?**

By design, the proposed ACP regulation limits the VOC emissions from aerosol coating products under an ACP to the amount that would have occurred under the proposed VOC standards for aerosol coatings. Since, the primary environmental impact of the aerosol coatings regulation will be a statewide decrease in VOC emissions, the inclusion of aerosol paints in the ACP will achieve the same level of emission reductions. Since VOCs contribute to the formation of tropospheric ozone, the reduction in VOC emissions from both the proposed regulation and the ACP regulation is expected to result in a net decrease in ground-level ozone and a positive impact on air quality and public health.

The staff have determined that no significant potential adverse environmental impacts would likely occur from the inclusion of the proposed regulation in the ACP regulation. The staff took into consideration the potential impacts of the proposed regulation on ground-level ozone, stratospheric ozone depletion, global warming, water quality, and landfill loading.

**What are the economic impacts of including the proposed regulation in the ACP?**

Overall, we expect the ACP to be more cost-effective than the proposed regulation for participating manufacturers. As stated previously, entry into the ACP program is completely voluntary; thus, the advantages of entering the program will be determined on a case-by-case basis by each manufacturer who wishes to participate. Because of this, it is reasonable to conclude that manufacturers will not enter the ACP program unless their overall compliance costs are less than or, at most, equal to the costs to comply with the proposed VOC standards.

We anticipate that participating manufacturers will find overall compliance costs to be less than they would have been if they had complied with all the proposed VOC standards. The overall cost-effectiveness for directly complying with the proposed VOC standards has been estimated by the ARB staff to range from $5,700 to $6,400 per ton of VOC reduced. Therefore, we anticipate that the overall cost-effectiveness for manufacturers participating in the ACP program should be less than $5,700 to $6,400 per ton of VOC reduced.

Similarly, we expect that the total annual cost to the entire aerosol coating products industry, assuming all manufacturers will operate under an ACP, will be lower than the $12 million to $13 million dollar cost estimated by the ARB staff for the entire industry to comply with the proposed regulation. This range reflects the range of products and reformulation options available to manufacturers. It is not feasible to determine the total annual cost to manufacturers if only some participate in the ACP program, but we do anticipate that the total annual cost in such cases are likely to be lower than the analogous costs without the ACP program. Assuming the reformulation costs are directly passed on to the consumers, we estimate the average cost increase per unit for aerosol coating products manufactured under approved ACPs to be no greater, and will most likely be less than, the $0.30 to $0.34 per unit estimated for the proposed regulation.

**Will inclusion of the proposed aerosol paints regulation in the ACP have any adverse economic or competitiveness impacts on California businesses?**

We have evaluated the potential impact of the ACP on business enterprises in California using publicly available data on California businesses and a survey we conducted in October 1993. Our analysis was conducted to meet the requirements of the Administrative Procedure Act, as amended by AB 969 and SB 513 (see Government Code, sections 11346.53 and 11346.54).

These amendments require state agencies, which are proposing to adopt or amend any administrative regulation, to assess the proposed regulation's potential for adverse economic impacts on California businesses. The amendments also require an assessment of the regulation's potential impacts on the ability of California businesses to compete with businesses in other states. In addition, new section 11346.54 requires state agencies to assess the potential impact of their regulations on California jobs and business expansion, elimination, or creation.

Based on the results of our study and the survey, we found that participating ACP manufacturers will benefit from the additional flexibility provided by the ACP. This additional flexibility is expected to induce innovations and cost savings for participating manufacturers. However, we recognize that the additional flexibility, which is the basis for the ACP, can also increase the level of competition for some products.

For non-participating manufacturers, increased competition can result when their low-VOC products compete directly in the market with high-VOC products sold under an approved ACP bubble. Since the high-VOC products may be employing older, less costly technologies, they may have a competitive advantage over newer, low-VOC products manufactured by non-ACP manufacturers. This can lead to the elimination of marginal producers for those products. Under this scenario, the proposed ACP may initially have some minor impacts on California employment and payroll.

However, we believe this is an unlikely outcome under the ACP. We determined that the potential cost differential which might result from this competition would not adversely impact small firms for the following reasons: (1) available public information indicates that there is a high level of nonprice competition in the personal and household product categories, in which the majority of regulated consumer products are classified, and (2) small firms tend to fill special niches in markets where price may not be the primary competitive factor.

By their very nature, niche markets tend to be comprised of products for which brand loyalty and specific product characteristics (e.g., natural ingredients) may be more of an influence on consumer purchase patterns than price. For the consumers in these captive niche markets, premium prices may be charged for their brand loyalty. Therefore, any cost differential with competing high-VOC products may be offset by the premium prices which are charged in these niche markets.

We also found that there would be minimal impacts on the ability of California companies to compete with non-California companies. This is because the consumer product regulations apply to all regulated products, regardless of where they are manufactured. The impact of the ACP should therefore be the same for all businesses regardless of where they are located. More importantly, we determined that the added flexibility, greater innovations, and cost savings should provide long-term positive impacts on California businesses.

The cost savings made possible by the ACP should improve the profit margins for participating manufacturers, inducing the expansion of employment in existing businesses or entrance into the market by new firms. If the cost savings are passed on to consumers in the form of lower prices, there would be more money for consumers to purchase products, thereby inducing expansion of product output and employment.

Additional new jobs can also be created under the ACP's surplus reductions trading program. If the trading market is robust, past experience with programs similar to the ACP indicates that new jobs will be created to handle the trading of credits between ACP manufacturers.

**How are we addressing small/one-product business concerns regarding the inclusion of the proposed regulation in the ACP?**

During the development of the ACP regulation, concerns were expressed regarding small and one-product businesses. Specifically, the concerns were that: (1) they may not be able to participate in the ACP's emissions bubbling program, (2) if their participation is not feasible, they may be at a competitive disadvantage if high-VOC, nonreformulated products are allowed to remain in the market to compete against their low-VOC, complying products. In these cases, the high-VOC noncomplying products may be less costly to market than reformulated, low-VOC complying products. While the original analysis was conducted to evaluate the concerns of small/one-product manufacturers of other consumer products,

most of the assumptions and conditions used in that analysis remain applicable for aerosol paint manufacturers.

We evaluated these concerns and have found, that for most manufacturers in the consumer products industry, inclusion of the proposed regulation in the ACP will not have an adverse impact on their competitiveness. However, we believe there may be some validity to these concerns for certain small businesses. To provide for a more equitable program and to facilitate the participation of small and one-product businesses in the ACP program, the ACP regulation includes a provision that allows the purchase of surplus reduction credits by these businesses.

Surplus reduction credits are generated when a manufacturer's verified ACP emissions for a particular compliance period are less than the ACP Limit for that period. Upon validation and issuance of the appropriate credits by the Executive Officer, the generator of the credits is free to use or sell those credits for as long as they are valid. Surplus reduction credits can be used internally by the manufacturer which generated the credits to meet its ACP Limit for the next compliance period; those credits that are not used internally can be traded, as provided in the ACP regulation, to other ACP participants. To help ensure that small businesses and businesses with limited product diversity can participate in the ACP program, the ACP regulation allows only small businesses and one-product businesses to purchase surplus reduction credits.

By limiting the purchase of surplus reduction credits to small manufacturers, we will help ensure the availability of surplus reduction credits for use by these companies. Without this limitation (i.e., unlimited trading by all companies), there would be little guarantee that surplus reduction credits would be available for small manufacturers to use. Once the ACP program is well under way and demonstrated to be effective for small manufacturers, we can consider expanding the trading program to include the purchase of credits by larger manufacturers.

With the purchase of sufficient credits and adequate emissions bubbling, participating small and one-product businesses can lower their overall compliance costs. The ACP's surplus credits trading mechanism should therefore help to improve the competitiveness of small and one-product businesses which may be impacted under the ACP program.

In addition to establishing the trading program for small and one-product businesses, we are also proposing to establish separate ACP programs for aerosol coating products and consumer products. We are proposing this bifurcation to address competitiveness concerns raised by some aerosol coatings manufacturers. In essence, their concern is that manufacturers who make both consumer products and aerosol coating products can gain surplus reduction credits from some consumer products so that their aerosol coatings would not have to be reformulated, thereby gaining an economic and marketing advantage over those manufacturers who do not have a diverse group of consumer products from which to achieve such surplus reductions. It should be noted that the proposed bifurcation will prevent

consumer product manufacturers, who do not directly compete with aerosol coating manufacturers, from selling surplus reduction credits to the aerosol coating manufacturers. However, it should help prevent the type of competitive disadvantage cited previously by the small aerosol coatings manufacturers.

Although it has been stated previously, it should again be emphasized that entry into the ACP is voluntary and that the ACP may not be useful to every manufacturer. Clearly, the decision to participate in the ACP should be conducted on a case-by-case basis by each manufacturer. If a manufacturer of aerosol coating products determines that the ACP is unsuitable for its purposes, the option of compliance with the proposed VOC standards is still available.

# III.

## RECOMMENDATION

We recommend that the Board approve the proposed aerosol paint regulation and amendments to the ACP regulation presented in this report. The proposed regulation and amendments to the ACP are necessary to carry out the Board's responsibilities under Division 26 of the Health and Safety Code.

# VOLUME II: TECHNICAL SUPPORT DOCUMENT

# Table of Contents

**Volume II. TECHNICAL SUPPORT DOCUMENT**

**Contents** **Page**


| | | |
|---|---|---|
| I. | Introduction | I.1 |
| | A. Overview | I.1 |
| | B. Enabling Legislation | I.2 |
| | C. Background | I.3 |
| II. | Aerosol Paint Emissions | II.1 |
| | A. Ambient Air Quality and the Need for Emission Reductions | II.1 |
| | B. Why Regulate Aerosol Paints? | II.5 |
| | C. Estimated Aerosol Paint Emissions | II.6 |
| III. | Aerosol Paint Industry | III.1 |
| | A. Aerosol Paint Market | III.1 |
| | B. What is an Aerosol Paint? | III.4 |
| IV. | Description of Paint Categories Proposed for Regulation | IV.1 |
| | A. Clear Coatings | IV.1 |
| | B. Flat Paint Products | IV.6 |
| | C. Fluorescent Coatings | IV.11 |
| | D. Metallic Coatings | IV.17 |
| | E. Non-Flat Paint Products | IV.22 |
| | F. Primer Coatings | IV.25 |
| | G. Art Fixatives or Sealants | IV.30 |
| | H. Auto Body Primer Sprays | IV.36 |
| | I. Automotive Bumper and Trim Products | IV.39 |
| | J. Aviation Propeller Coatings | IV.43 |
| | K. Aviation or Marine Zinc Primer Coatings | IV.45 |
| | L. Corrosion Resistant Brass, Bronze or Copper Coatings | IV.48 |
| | M. Exact Match Finishes | |
| | (a)Engine Enamel | IV.51 |
| | (b)Automotive | IV.54 |
| | (c)Industrial | IV.57 |
| | N. Floral Sprays | IV.60 |
| | O. Glass Coatings | IV.62 |
| | P. Ground Traffic Marking Paint | IV.66 |
| | Q. High Temperature Coatings | IV.69 |
| | R. Hobby/Model/Craft Coatings | IV.75 |
| | S. Marine Spar Varnish | IV.83 |
| | T. Photograph Coatings | IV.86 |
| | U. Pleasure Craft Finish Primer/Surfacer/Undercoater | IV.89 |
| | V. Pleasure Craft Topcoat | IV.91 |
| | W. Shellac Sealers, Clear and Pigmented | IV.93 |
| | X. Slip-Resistant Coatings | IV.96 |
| | Y. Spatter/Multi-Color Coatings | IV.99 |

## TABLE OF CONTENTS (continued)


| Contents | | Page |
|---|---|---|
| | Z. Vinyl/Fabric/Leather/Polycarbonate Coatings | IV.102 |
| | AA. Webbing/Veiling Coatings | IV.107 |
| | BB. Weld-Through Primer Coatings | IV.110 |
| | CC. Wood Stains | IV.112 |
| | DD. Wood Touch-Up and Repair | IV.116 |
| V. | Technical Basis for Proposed Regulation | V.1 |
| | A. Introduction | V.1 |
| | B. Initial 1996 VOC Standards | V.2 |
| | C. Final 1999 VOC Standards | V.7 |
| | D. Commercially and Technologically Feasible VOC Standards | V.8 |
| VI. | Summary of Proposed Regulation | VI.1 |
| | A. Applicability (Section 94520) | VI.1 |
| | B. Definitions (Section 94521) | VI.2 |
| | C. Standards and Requirements (Section 94522) | VI.2 |
| | D. Exemptions (Section 94523) | VI.7 |
| | E. Administrative Requirements (Section 94524) | VI.8 |
| | F. Variances (Section 94525) | VI.11 |
| | G. Test Methods (Section 94526) | VI.11 |
| | H. Severability (Section 94527) | VI.14 |
| | I. Federal Enforceability (Section 94528) | VI.14 |
| VII. | Environmental Impacts | VII.1 |
| | A. Summary of Environmental Impacts | VII.1 |
| | B. Legal Requirements Applicable to the Analysis | VII.1 |
| | C. Emissions Reductions and Other Potential Environmental Impacts | VII.2 |
| | D. Other Potential Environmental Impacts | VII.6 |
| VIII. | Economic Impacts | VIII.1 |
| | A. Introduction | VIII.1 |
| | B. Costs to Manufacturers and Marketers of Aerosol Paints | VIII.1 |
| | C. Costs to Other Industries | VIII.8 |
| | D. Impacts of Increased Costs on Consumers | VIII.10 |
| | E. Impacts of Increased Costs on Manufacturers | VIII.15 |
| IX. | Issues | IX.1 |
| | A. Methylene Chloride | IX.1 |
| | B. Lacquers | IX.8 |
| | C. VOC Standards for December 31, 1999 | IX.10 |
| | D. Aerosol Paints Assembled from Aerosol Containers of Propellant | IX.11 |

## TABLE OF CONTENTS (continued)

Contents | Page


X. Amendments to the Alternative Control Plan to Include Aerosol Paints X.1
- A. Current Regulatory Approach: Traditional Control with Flexibility X.1
- B. Lower Overall Costs Through Additional Flexibility X.1
- C. The Alternative Control Plan X.1

Glossary

Appendices

- A. Section 41712 of the California Clean Air Act Amendments
- B. Bay Area Air Quality Management District's Regulation 8, Rule 49, Aerosol Paint Products
- C. Proposed Aerosol Paint Regulation
- D. ARB Aerosol Paint Survey
- E. Battelle Report
- F. Workshop Announcements
- G. Cost Analysis Calculations
- H. Proposed Amendments to the Alternative Control Plan Regulation

# LIST OF TABLES


| Table | | Page |
|---|---|---|
| II-1 | Ambient Air Quality Standards for Ozone and PM-10 | II.3 |
| II-2 | VOC Emissions by Product Category | II.9 |
| IV-1 | Clear Coatings | IV.2 |
| IV-2 | Flat Paint Products | IV.7 |
| IV-3 | Fluorescent Coatings | IV.12 |
| IV-4 | Metallic Coatings | IV.18 |
| IV-5 | Non-Flat Paint Products | IV.22 |
| IV-6 | Primer Coatings | IV.26 |
| IV-7 | Art Fixative or Sealant | IV.31 |
| IV-8 | Auto Body Primer Sprays | IV.36 |
| IV-9 | Automotive Bumper and Trim Products | IV.40 |
| IV-10 | Aviation Propeller Coating | IV.43 |
| IV-11 | Aviation or Marine Zinc Primer | IV.46 |
| IV-12 | Corrosion Resistant Brass, Bronze or Copper | IV.49 |
| IV-13 | Exact Match Finish | |
| | Engine Enamel | IV.51 |
| | Automotive | IV.55 |
| | Industrial | IV.57 |
| IV-14 | Floral Spray | IV.60 |
| IV-15 | Glass Coating | IV.63 |
| IV-16 | Ground Traffic Marking Coatings | IV.66 |
| IV-17 | High Temperature Coatings | IV.70 |
| IV-18 | Hobby/Model/Craft Coatings | IV.77 |
| IV-19 | Marine Spar Varnish | IV.84 |
| IV-20 | Pleasure Craft Finish Primer Surfacer/Undercoater | IV.89 |
| IV-21 | Pleasure Craft Topcoat | IV.91 |
| IV-22 | Shellac Sealer | IV.94 |
| IV-23 | Slip-Resistant Coatings | IV.97 |
| IV-24 | Spatter/Multi-Color Coatings | IV.99 |
| IV-25 | Vinyl/Fabric/Leather/Polycarbonate | IV.103 |
| IV-26 | Webbing/Veiling Coatings | IV.107 |
| IV-27 | Wood Stains | IV.113 |
| IV-28 | Wood Touch-Up, Repair or Restoration | IV.117 |
| V-1 | Physical Properties of HFC-152a | V-6 |
| V-2 | Comparison of Hypothetical 1996 and 1999 Complying High Temperature Aerosol Paint | V-8 |
| V-3 | Number of Complying Products | V-10 |
| VI-1 | Proposed Aerosol Coating Product VOC Standards | VI-3 |

## LIST OF TABLES (continued)


| Table | | Page |
|---|---|---|
| VII-1 | Summary of Emissions and Emission Reductions from Proposed Standards | VII-3 |
| VII-2 | NPCA Calculations as to Theoretical Emissions from Aerosol, Brush-on, and Spray-on Coatings | VII-7 |
| VII-3 | CARB Calculations as to Theoretical Emissions from Aerosol, Brush-on, and Spray-on Coatings | VII-9 |
| VIII-1 | Comparison of the Cost-Effectiveness of the Proposed Aerosol Products Regulation with the Cost-Effectiveness of Other Control Measures for Criteria Pollutants | VIII-7 |
| VIII-2 | Comparison of the Costs of the BAAQMD and Proposed ARB Aerosol Paint Regulations | VIII-8 |
| VIII-3 | Aerosol Paint Price Comparison Between Fairfield and Sacramento | VIII-12 |
| IX-1 | Methylene Choride Emissions Per Category | IX-5 |
| X-1 | Financial and Economic Profile of Affected Industry | X-7 |
| X-2 | Breakdown of Firms by Number of Employees | X-9 |
| X-3 | Breakdown of Firms by Market Share | X-10 |
| X-4 | Aerosol Coating Products Market Share Distribution | X-10 |

# LIST OF FIGURES


| Figure | | Page |
|---|---|---|
| II-1 | Most California's Breathe Unhealthy Air Many Days of the Year | II-3 |
| II-2 | Geographic Prevalence of Ozone in California | II-4 |
| II-3 | Geographic Prevalence of PM10 in California | II-4 |
| II-4 | VOC Emissions from Aerosol Paints as Related to the Total Consumer Products VOC Emissions in California in 1991 | II-7 |
| II-5 | Comparison Between Estimated VOC Emissions from General Aerosol Paint Categories and Specialty Coating Categories | II-10 |
| III-1 | National Companies vs. California | III-3 |
| III-2 | Vertical Valve Assembly | III-10 |
| III-3 | Vertical Valve Assembly-Opened & Closed | III-10 |
| III-4 | Mounting Cups | III-11 |
| III-5 | Hole In Valve Stem | III-13 |
| VIII-1 | Percent Difference in Price Between Fairfield and Sacramento | VIII-13 |
| VIII-2 | Aerosol Paint Price Comparison Between Fairfield and Sacramento | VIII-13 |
| VIII-3 | Ace Hardware-Aerosol Cost Comparison | VIII-14 |
| VIII-4 | Home Depot-Aerosol Paint Price Comparison | VIII-14 |
| VIII-5 | Target-Aerosol Paint Price Comparison | VIII-15 |

# I.

# INTRODUCTION

## A. OVERVIEW

This technical support document (TSD) presents a proposed regulation to reduce volatile organic compound (VOC) emissions from hand-held aerosol spray paints and related coating products. As part of the Air Resources Board's (ARB or Board) program to reduce emissions from consumer products, this proposed regulation is designed to carry out the requirements of the California Clean Air Act of 1988 (the "Act," Stats. 1988, Chapter 1586).

This TSD provides the technical information that we used in developing the proposed aerosol coatings regulation. We obtained much of the information from members of the aerosol coatings industry, a comprehensive survey of aerosol coating manufacturers, individual meetings with industry representatives, and comments on distributed drafts of the proposed regulation. In addition, we relied on technical information from trade journals, government agencies, and other sources. This document presents the following information:

- an overview of the aerosol paint industry,
- a description of the products covered by this proposed regulation,
- a discussion of the need for emissions reduction from this source,
- the technical basis for the regulation,
- an overview of the proposed requirements, and
- a discussion of the economic, environmental and other impacts that are expected to result from this regulation.

To provide a very high level of compliance flexibility as requested by industry representatives, the ARB staff is proposing to include aerosol coating products in the Alternative Control Plan (ACP) regulation for consumer products. This TSD presents the proposed amendments to the ACP which are necessary for establishing an ACP program for aerosol coating products which is separate from the ACP program for consumer products. Although the ACP programs for consumer products and aerosol coating products are intended to be bifurcated, the proposed amendments ensure that both programs meet the same requirements for enforceability, credits trading and other applicable requirements. Along with the proposed amendments, the TSD also presents the ARB staff's analysis of the potential environmental and economic impacts from including aerosol coating products in the ACP regulation.

## B. ENABLING LEGISLATION

To address the serious air pollution problems of California, the Legislature promulgated the California Clean Air Act of 1988. The Act added section 41712 to the California Health and Safety Code and requires the Board to adopt regulations to achieve the maximum feasible reduction in reactive organic compounds emitted by consumer products. In addition, the ARB must determine that adequate data exist to adopt the regulations, the regulations must be technologically and commercially feasible, and they must be necessary. Section 41712 also prohibited districts from adopting any regulation prior to January 1, 1994, that is different from a state board regulation for consumer products.

The original language of the Act defined consumer products in section 41712 as:

> "a chemically formulated product used by household and institutional consumers, including but not limited to, detergents; cleaning compounds; polishes; floor finishes; cosmetics; personal care products; home, lawn and garden products; disinfectants; sanitizers; and automotive specialty products but do not include paint, furniture coatings, or architectural coatings."

Because aerosol coatings are considered to be "paint," they were not considered to be a consumer product by this definition, even though aerosol paints are a large source of VOC emissions relative to the other consumer product categories.

Two recent legislative actions amended Health and Safety Code section 41712 adding aerosol paints to the definition of consumer products and requiring specific reductions in VOC emissions from aerosol paints. Assembly Bill 2783 and Assembly Bill 1890, approved by the Governor in 1992 and 1993 respectively, give the Board new authority to regulate aerosol spray paints (AB 2783, Sher; Stats. 1992, Chapter 945 and AB 1890, Sher; Stats. 1993, Chapter 1028).

AB 2783 amended the definition of consumer products to include aerosol paints as a consumer product to be regulated by the Board and extended indefinitely the prohibition against district adoption of consumer product regulations which are different from a regulation adopted by the Board.

The AB 1890 amendments to section 41712 establish a prescriptive emission reduction process for aerosol paints. These amendments require the ARB to:

- adopt statewide regulations on or before January 1, 1995, that will achieve a 60 percent emission reduction from the use of aerosol paints by December 31, 1999, and to develop interim limits prior to 1999;

- conduct a public hearing on or before December 31, 1998, on the technological or commercial feasibility of achieving full compliance with the final limits by December 31, 1999;

- grant an extension of time not to exceed five years if the Board determines the 60 percent reduction is not technologically or commercially feasible by December 31, 1999; and

- ensure that the final limits for aerosol paints do not become federally enforceable prior to the effective date established, including any extension if granted.

The amendments pursuant to AB 1890 also clarified the intent of the Legislature with respect to the regulation of aerosol paints by requiring, with one exception, that limits on the emissions of reactive organic compounds from aerosol paints be set solely by the state board to ensure uniform standards are applicable on a statewide basis. The only exception to this requirement is any regulation that has been adopted by a district pursuant to an order of a federal court. A copy of amended section 41712 is provided in Appendix A.

VOC emission reductions from aerosol paints are also part of the recently adopted State Implementation Plan (SIP). On November 9, 1994, the ARB adopted the SIP. The SIP serves as the state's overall long-term plan for attainment of the federal ambient air quality standards. Achieving significant VOC reductions from consumer products, including aerosol coating products, is a key element of the SIP. Together with significant reductions from stationary facilities, mobile sources, and other area sources, the reductions to be obtained under the consumer products element of the SIP will help achieve attainment of the air quality standards for ozone.

In addition, the U.S. EPA proposed on February 15, 1994, a rule for aerosol paints in the Federal Implementation Plan (FIP) for the State of California. Based on the current version of the FIP, U.S. EPA would promulgate an aerosol paint rule which parallels an earlier draft version of the aerosol paint regulation that was discussed at a public workshop in the fall of 1993. It is our intention to have the proposed ARB aerosol paint regulation become part of the SIP and replace the FIP rule.

## C. BACKGROUND

To date, the Board has adopted two regulations to fulfill the requirements of the Act as it pertains to consumer products. The first regulation was approved in November 1989, and requires a reduction in VOC emissions from antiperspirants and deodorants. The second regulation, approved in October 1990, requires a reduction in VOC emissions from 16 different categories of consumer products. This regulatory action is commonly referred to as Phase I.

In January 1992, the Board approved amendments to the Phase I regulation in order to achieve the maximum feasible reduction in VOCs from consumer products. These amendments added 10 more categories to the consumer products regulation and are referred to as the Phase II amendments. To ensure consistency, the antiperspirant and deodorant regulation was also amended during both the Phase I and Phase II rulemakings. Combined, the ARB consumer products regulations establish standards for 27 different consumer products. The regulations are contained in Title 17, California Code of Regulations, sections 94500-94517.

Prior to the AB 2783 and AB 1890 amendments, both the Bay Area Air Quality Management District (BAAQMD) and the South Coast Air Quality Management District (SCAQMD) had adopted rules to regulate aerosol paints. The BAAQMD Rule 49 "Aerosol Paint Products," the result of a court order, remains in effect. However, SCAQMD Rule 1179 was superseded by the AB 2783 amendments to section 41712. A brief discussion on the district rules is given below.

Bay Area Air Quality Management District: The BAAQMD adopted Rule 49 in June 1990, in response to a federal court order (the "Order") signed on January 10, 1990. (A copy of Rule 49 is provided in Appendix B.) The Order was the result of the consolidated cases of Citizens for a Better Environment v. George Deukmejian and Sierra Club v. Metropolitan Transportation Commission, et al.. The Order required that control measures be adopted by July 1, 1990, to achieve emission reductions in the BAAQMD of at least 1.0 ton per day by February 1, 1991, and 4.0 tons per day by February 1, 1993.

As a result of the Order, the ARB and the BAAQMD signed an agreement detailing the responsibilities of the two agencies. Under the terms of the agreement, the BAAQMD was responsible to adopt and implement an aerosol paint regulation that would achieve an emission reduction of at least 1.0 ton per day by February 1, 1991. The ARB was responsible to adopt and implement a regulation to control emissions from other consumer products that would, in conjunction with the BAAQMD regulation, achieve the total required emission reduction of at least 4.0 tons per day.

In June 1990, the BAAQMD adopted Rule 49 which established VOC limits for aerosol paints. Rule 49 limited all aerosol paints to 2 grams of organic compounds per gram coating solids (67 percent VOC). Later, in August 1991, the BAAQMD amended Rule 49 and lowered the VOC standards of general paint categories from 67 percent to 60 percent or 65 percent, depending on the type of paint, in order to allow an increase in the VOC limits for products in the specialty categories. This allowed a greater variety of aerosol spray paint products to remain on the market while continuing to achieve the required 1.0 ton per day emission reduction.

In order to track and enforce the regulation, Rule 49 established several other requirements. These include the following:

- administrative requirements to monitor product labeling,
- record keeping requirements that require aerosol paint manufacturers to report all sales data by category and organic compound content to the Air Pollution Control Officer (APCO) every three months, and
- test methods for determining compliance that can be found in the BAAQMD Manual of Procedures, Volume III, Methods 35 and 36.

As previously stated, districts are prohibited from adopting a consumer product regulation which is different from an ARB adopted regulation except when the district has adopted a rule pursuant to a federal court order. Because this is the case for the BAAQMD's Rule 49, it will remain in effect until the federal court has authorized the district to observe the ARB rule. As such, until a federal court takes action, the adoption of a statewide aerosol paint rule will not impact the BAAQMD rule.

South Coast Air Quality Management District: The SCAQMD adopted an aerosol paint rule, Rule 1129, in November 1990. The rule was similar to the first version of the BAAQMD Rule 49, limiting all aerosol paints to 2 grams of VOC per gram of coating solids. Once this rule was adopted by the SCAQMD, the aerosol paint industry filed three lawsuits against the District challenging the adoption of Rule 1129. The petitioners claimed that the rule was too restrictive and called for unachievable reductions in VOC content. These lawsuits were consolidated into one action, Dunn-Edwards Corporation v. SCAQMD. In July of 1991, the Superior Court of California ruled against the SCAQMD and nullified Rule 1129 on the basis that the District did not comply with the California Environmental Quality Act in promulgating the rule.

The SCAQMD appealed the court decision and in May of 1993, the Court of Appeals upheld the adoption of Rule 1129. During the pendency of this case, the district had been considering whether amendments to Rule 1129 would be appropriate and had discussed proposed revisions at public workshops. Revisions to Rule 1129 which rendered the rule more technologically feasible. These revisions included adding specialty coating categories similar to those in the BAAQMD rule, and future effective standards for 1997 and 1999 that were designed to achieve a total emission reduction of approximately 60 percent in 1999.

In part because of industry's concern about the initial Rule 1129 standards, the ARB, BAAQMD, SCAQMD and aerosol paint industry representatives drafted legislation to provide for a statewide rule for aerosol paints. The legislation, Assembly Bill 1890, was described earlier; it provided sole authority to the ARB to develop an aerosol paint regulation controlling VOCs and specified a 60 percent emission reduction target. This action invalidated SCAQMD's Rule 1129 while meeting their goal of a 60 percent reduction in the VOC content in aerosol paints.

In addition to the district activities, the United States Environmental Protection Agency (USEPA) proposed a rule for aerosol paints in the Federal Implementation Plan (FIP) on February 15, 1994. The USEPA developed the FIP to help three air pollution control agencies in California attain the federal NAAQS for ozone. Based on the current version of the FIP, USEPA would promulgate an aerosol paint rule which parallels an earlier draft version of the aerosol paint regulation that was discussed at a public workshop in the fall of 1993. However, USEPA staff have indicated that it is their intent to have a rule in the FIP that is similar to the statewide rule for aerosol paints so we expect that the final version of the FIP aerosol paint rule will mirror the proposed California aerosol paint rule. The final version of the FIP is currently scheduled to be promulgated in February 1995. However, in January 1995, the parties to the FIP lawsuit agreed to delay actual implementation of the control measures in the FIP (including the FIP aerosol paint rule) until the year 1997. Negotiations are also underway to delay the promulgation of the FIP until some future date after February 1995.

# II.

## AEROSOL PAINT EMISSIONS

### A. AMBIENT AIR QUALITY AND THE NEED FOR EMISSION REDUCTIONS

Volatile organic compound (VOC) emissions contribute to the formation of both ozone and PM-10 (particulate matter less than 10 microns equivalent aerodynamic diameter). Ozone formation in the lower atmosphere results from a series of chemical reactions between VOCs and nitrogen oxides in the presence of sunlight. In addition, the state PM-10 standard is violated in virtually the entire state. PM-10 is the result of both direct and indirect emissions. Direct sources include emissions from fuel combustion and wind erosion of soil. Indirect sources result via the chemical reaction of VOCs, nitrogen oxides, sulfur oxides and other chemicals in the atmosphere.

Ozone: VOCs and nitrogen oxides (NOx) react in the presence of sunlight to form ozone. The rate of ozone generation is related closely to the rate of VOC (in the form of reactive organic gases - ROG) production as well as the availability of NOx in the atmosphere (CARB, 9/87; Seinfeld, 1989). At low ambient concentrations, ozone is a colorless, odorless gas and the chief component of urban smog. It is by far the state's most persistent and widespread air quality problem. Recent data revealed that 75 percent of the nation's risk from exposure to ozone occurs in California. Ozone continues to be an important environmental and health concern despite nearly 20 years of regulatory efforts.

It has been well documented that ozone adversely affects the respiratory functions of humans and animals. Ozone is a strong irritant that can cause constriction of the airways, forcing the respiratory system to work harder in order to provide oxygen to the body. Besides shortness of breath, it can aggravate or worsen existing respiratory diseases, such as emphysema, bronchitis and asthma (CARB, 10/91).

Chronic exposure to ozone can damage deep portions of the lung. ARB research has documented permanent lung damage in young adults, aged 14-25, most of whom were life-long residents of the highly polluted South Coast Air Basin. The research, which provides some of the most definitive research to date of the potential life-long health threat from poor air quality, found early signs of permanent lung disease in 104 out of 107 accident victims who were studied (CARB, 10/91). This study suggests that lung tissue does not fully restore itself, but rather reacts somewhat like sunburned skin, losing some of its restorative ability with each exposure and eventually leading to premature or permanent damage (CARB, 10/91).

Not only does ozone adversely affect human and animal health, but is also affects vegetation throughout most of California resulting in reduced yield and quality in agricultural crops and disfiguration or unsatisfactory growth in ornamental vegetation. Recent ARB studies indicate that ozone pollution damage to crops is estimated to cost agriculture over 300 million dollars annually (CARB, 10/91).

PM-10: Particulate matter (PM-10) is a solid or liquid substance with less than (<) 10 microns determined as equivalent aerodynamic diameter. PM-10 can be directly emitted into the atmosphere as the result of anthropogenic actions such as fuel combustion or natural causes such as wind erosion. Indirect PM-10 is formed via a complex reaction involving a gas-to-particulate matter conversion process in which VOCs can participate. The focus of this discussion will be on the indirect aerosol formation of PM-10.

Airborne particulate matter (PM-10) is composed of up to 35 percent aerosols which may be the result of atmospheric chemical reactions of sulfates, nitrates, ammonium, trace metals, carbonaceous material (VOCs) and water. The products of gas-phase reactions may combine to form new particles (either single or two or more vapor phase species) or increase existing particle growth by condensation of VOCs. Furthermore, although the contribution from VOCs is not known, carbonaceous aerosols generally account for a significant fraction of the fine (< 2 micron equivalent aerodynamic diameter) urban particulate matter. In Los Angeles, for example, aerosol carbon alone accounts for about 40 percent of the total fine particulate mass (Seinfeld, 1989).

Particulate matter with diameters smaller than or equal to 10 microns equivalent aerodynamic diameter (PM-10) have the greatest impact on the respiratory system because they can reach deep into the lungs. The elderly, persons suffering from lung or cardiovascular disease, infants and children, and asthma sufferers have been identified as being at greater risk from exposure to particulate matter. PM-10 causes irritation of the respiratory tract and may contain toxic compounds which adhere to the particle surfaces and can enter the lungs. Because it is visible in the atmosphere, PM-10 also contributes to reduced visibility.

To protect California's population from the harmful effects of ozone and PM-10, federal and state air quality standards for these contaminants have been established. These standards are shown in Table II-1. The state hourly ozone standard is 0.09 parts per million (ppm) and the national hourly ozone standard is 0.12 ppm. The state PM-10 standard for a

24 hour period is 50 micrograms per cubic meter ($\mu g/m^3$) and the national standard is 150 $\mu g/m^3$ determined over a 24-hour period.

**Table II-1**
**Ambient Air Quality Standards for Ozone and $PM_{10}$**

| Pollutant | Averaging Time | State Standard | National Standard |
|---|---|---|---|
| Ozone | 1 hour | 9 pphm ($180\ \mu g/m^3$) | 12 pphm ($235\ \mu g/m^3$) |
| $PM_{10}$ | Annual Geometric Mean<br>24 hour<br>Annual Arithmetic | $30\ \mu g/m^3$<br>$50\ \mu g/m^3$<br>---- | ----<br>$150\ \mu g/m^3$<br>$50\ \mu g/m^3$ |

The vast majority of California's population who live in urban areas breathe unhealthy air for much of the year, as clearly shown in Figure II-1. Lastly, Figures II-2 and II-3 show that ozone and $PM_{10}$ are not limited to just urban areas, but can be found in nearly every county in California. As shown in these maps, 32 counties are currently designated as nonattainment for the state ozone standard, while 50 counties are designated as nonattainment for the state $PM_{10}$ standard. These counties contain over 90 percent of California's population, a clear indication of the extent and magnitude of the ozone and $PM_{10}$ problems in California. [ARB, 1991b]

**Figure II-1**
**Most Californians Breathe Unhealthy Air Many Days of the Year**

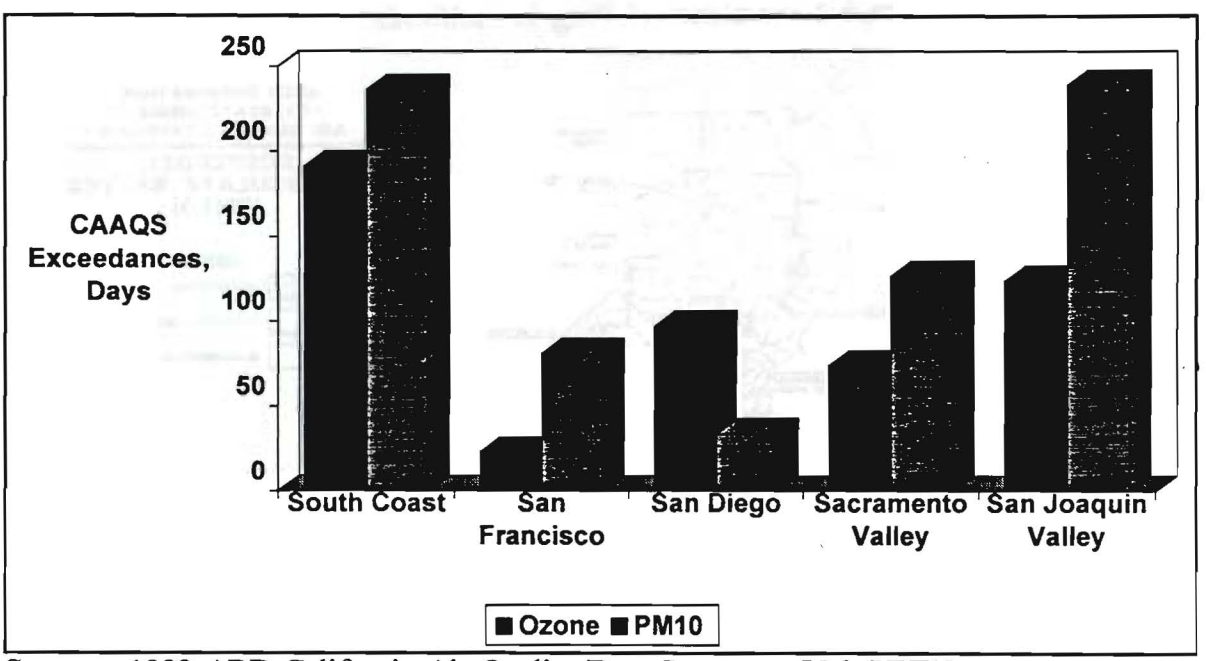


Source: 1992 ARB California Air Quality Data Summary, Vol. XXIV

## Figure II-2
## Geographic Prevalence of Ozone in California

## Figure II-3
## Geographic Prevalence of $PM_{10}$ in California

* PURSUANT TO SECTION 39608 OF THE CALIFORNIA CLEAN AIR ACT (TSD/ARB 4/92)

## B. WHY REGULATE AEROSOL PAINTS?

Over the past twenty years, air pollution agencies in California have been working diligently to improve air quality. Much of the effort was directed to the more traditional sources of air pollution - the automobile and smokestacks. However, now that we are approaching the technological limits for achieving emissions reductions from motor vehicles and large industrial sources, California still has serious air pollution problems. As the level of potential emissions reduction from these traditional sources are reduced, new sources of previously unregulated emissions must be evaluated for possible reductions. Motor vehicles currently account for over half of the total VOC emissions in California. However, even with full implementation of the Low Emission Vehicle/Clean Fuels Program and the corresponding realization of emission reductions projected by that program, the Los Angeles area will still be in nonattainment for federal and state ozone standards. It is clear from the recently adopted South Coast Air Quality Management Plan (South Coast, 8/94) that additional significant emission reductions are also needed from stationary sources, including area sources such as aerosol paints.

### California Clean Air Act Requirements

In an effort to protect public health and to address the inability of current air pollution programs to achieve the state air quality standards, the California legislature adopted the California Clean Air Act (CCAA) of 1988. The California Air Resources Board is required by the CCAA to adopt the most effective emission controls possible for motor vehicles, fuels, consumer products, and a range of mobile sources.

As mentioned earlier in this Initial Statement of Reasons, the CCAA was recently amended. The amendments now require the ARB to adopt regulations specific to aerosol paints by January 1, 1995. The legislation mandates that the regulations must achieve at least a 60 percent reduction in emissions from aerosol paints from the 1989 baseline year, and that interim standards are specified prior to the final standards. The proposed VOC standards for the individual aerosol paint categories, including the future effective standards, would achieve the mandated emissions reductions necessary to satisfy this new legislation.

### State Implementation Plan

In addition to California state requirements, the federal Clean Air Act (CAA) also requires California to submit a State Implementation Plan (SIP) with commitments to develop control measures in ozone nonattainment areas. In response to this requirement, the ARB developed a SIP which includes the proposed aerosol paint regulation and other consumer products regulations, along with regulations on motor vehicle emissions, fuels, and pesticides. The SIP was approved by the Board on November 15, 1994, and is now being considered for adoption by the U.S. EPA.

The consumer products component of the SIP is a multifaceted program composed of "near-term," "mid-term," and "long-term" control measures. The near-term SIP measures are

comprised of our existing consumer product regulations, the Alternative Control Plan (ACP) regulation, and the proposed aerosol paint regulation. The near-term commitment in the SIP for aerosol paints is to achieve about a 20 tons per day reduction in aerosol paint emissions from a projected uncontrolled 2000 baseline of approximately 33 tons per day. The long-term commitment, which is principally to assist the SCAQMD in demonstrating attainment, is to realize an additional 9.5 tons per day reduction by the year 2010. These reductions are estimated from the projected summer operational planning inventories.

Rate of Progress Plans

The federal CAA also requires all areas designated as moderate to extreme nonattainment for the federal ozone standard to develop Rate of Progress Plans. These plans must show reasonable progress towards attainment, with steady reductions from 1990 emissions levels. Specifically, the areas are required to achieve a 15 percent reduction in VOC emissions by 1996, and three percent per year thereafter until attainment. Since it takes considerable time to adopt all of the regulatory measures needed in later years, the CAA allows for commitments to adopt such regulations within a specified timeframe. Such commitments can be met through district measures as well as State adopted regulations, such as the proposed aerosol paint regulation. If such commitments cannot be met, the CAA requires nonattainment areas to develop contingency measures as well. These contingency measures would achieve the needed VOC reductions if the original committed measures fail to deliver the needed reductions. At present, some California districts have included reductions from the proposed aerosol paint regulation in their plans, while other districts needing less reductions have used it as a contingency measure.

## C. ESTIMATED AEROSOL PAINT EMISSIONS

The use of aerosol paints results in VOC emissions which originate from the solvents and propellants used in these products. When aerosol paints are used outdoors or in well ventilated areas, the VOCs have a direct route to ambient air after they have vaporized. The propellants used in aerosol paints, such as isobutane, propane, and dimethyl ether, are gases at room temperature. These gases are emitted when an aerosol paint is sprayed and are immediately available for transport to the atmosphere through air exchange (CARB, 1991). The solvents used in aerosol paint evaporate during the application and drying processes of the paint. Typically, a solvent-blend of fast evaporating and slow to medium evaporating solvents are used in the formulation, to provide the correct drying time for the paint film. The evaporation of the solvents takes place in two stages, with the initial loss of solvent (up to 80%) being dependent on the vapor pressure of the fast evaporating solvent. After the initial loss of solvent, the polymer film is formed. The remaining solvent loss is caused by a slower diffusion-controlled process (Industrial Colloid Advisory Group, p. 207). The nonvolatile portion of the coating remains in the cured coating film and, under normal use conditions, is not emitted to the atmosphere (Dill, pp. 34-36).

Air Resources Board Emissions Inventory

Based on the most recent published ARB emissions inventory, the total VOC emissions from all consumer products was about 260 tons per day in 1991. In 1991, aerosol paints accounted for about 12 percent of the consumer products inventory or about 31 tons per day (annual average). This is shown in Figure II-4. As a check on this estimate, other sources of information were investigated including the U.S. EPA's 1990 survey, and the Chemical Specialties Manufacturers Association's (CSMA) Pressurized Product Survey for 1992. Estimates based on these sources of information agree well with the ARB's estimate. Specifically, when the data from a 1990 survey conducted by the U.S. EPA is scaled down for California by population, the emissions are estimated to be about 29 tons per day. Similarly, scaling down the CSMA data and assuming an average can weight of 10.5 ounces and an average VOC content of 77 percent, the emissions are about 30 tons per day.

**FIGURE II-4**

**VOC EMISSIONS FROM AEROSOL PAINTS AS RELATED TO THE TOTAL CONSUMER PRODUCTS VOC EMISSIONS IN CALIFORNIA IN 1991**

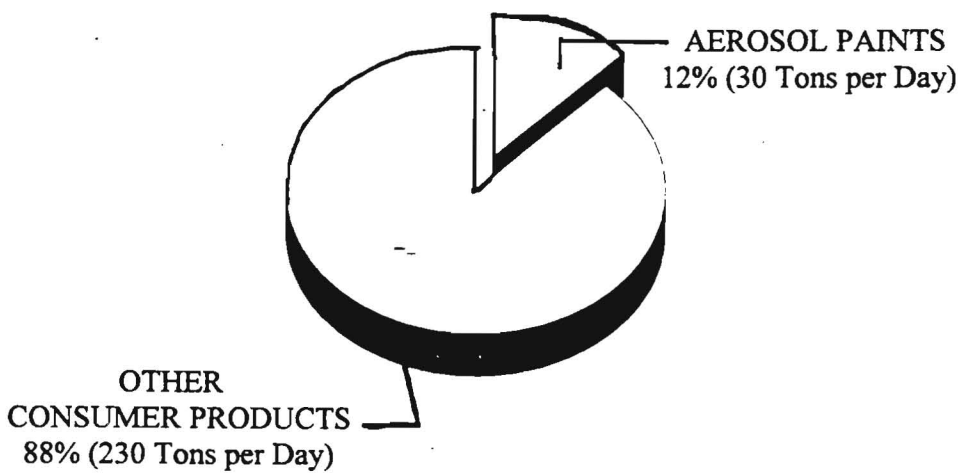


Source: ARB 1991 Emissions Inventory.

The amendments to the California Clean Air Act specifically require the ARB to adopt a regulation to achieve at least a 60 percent emission reduction in aerosol paint emissions relative to the 1989 baseline. To determine the aerosol paint emissions in 1989, we relied on the 1989 ARB emissions inventory. In that year, the total emissions from all consumer products was 250 tons per day. Again, assuming that aerosol paints account for 12 percent, the emissions of aerosol paints are approximately 30 tons per day. Applying a 60 percent reduction to that baseline, results in an emission reduction target of at least 18 tons per day.

ARB 1992 Aerosol Paint Survey

In 1993, we conducted a survey of aerosol paint manufacturers to collect data on the aerosol paints that were sold in 1992 in California. Originally, we had hoped this survey would provide another source of information to estimate the emissions from aerosol paint. However, we believe this survey underestimates the emissions from aerosol paint due to incomplete reporting by manufacturers and marketers of aerosol paints. Based on this survey, the reported emissions from aerosol paint are approximately 20 tons per day, significantly lower than other emissions estimates. While it is possible that emissions have decreased in California due to anti-graffitti laws, the recession, and the Bay Area's aerosol paint regulation, we cannot quantify the extent to which this has occurred. Nevertheless, we believe that this survey provides an excellent picture of the industry in terms of the formulations in aerosol paint, and the individual contributions of each category of aerosol paints sold in California. As such, we used this survey to determine the average percent VOC, solids, propellant, and other ingredients used in each aerosol paint category. We also used the survey to collect information on the companies that manufacture or market aerosol paint. A short discussion of the survey is presented below.

The ARB Aerosol Paint survey (shown in Appendix D) requested the following information for each product sold in California: (1) the name of the product; (2) the product use (household, industrial, or both); (3) a coating code indicating the type of paint (e.g. flat, fluorescent, etc.); (4) the 1992 sales of the product in California; (5) the percent by weight VOC, solids, water, and "other" compounds; and (6) the percent by weight methylene chloride, 1,1,1-trichloroethane, perchloroethylene, and propellant.

The survey was sent to companies identified from the following sources of information: (1) National Paint and Coatings Association; (2) Western Aerosol Information Bureau; (3) 1992 Thomas Register; and (4) industry supplied mail lists. From these sources of information, 87 companies were identified and contacted by mail, with 61 (70%) returning the survey questionnaires. All of the companies that were known to manufacture or distribute aerosol paints in California completed a questionnaire, with a few indicating that they do not sell aerosol paints in California. Following the initial mailing, 27 small companies were also added to the mailing list and sent surveys when they contacted the ARB for information about the aerosol paint regulations, or were identified in the course of ARB's regulation development efforts. Seven of these companies returned completed questionnaires to ARB. In total, 68 companies returned questionnaires to ARB by November 1, 1993, and it was determined that 58 of the 68 companies sell aerosol paints in California.

The survey data was processed by Battelle Memorial Institute under contract with the ARB. Battelle prepared a computer database, reviewed the data for accuracy and completeness, contacted representatives of participating companies to resolve problems, and prepared a report summarizing the results. Based on their analysis, the survey data showed the total VOC emissions from aerosol paints to be approximately 19 tons per day in California (Battelle Report, 1994). Survey updates to include additional information submitted after the Battelle Report have raised this estimate to about 20 tons per day.

Based on the information compiled from the ARB Aerosol Paint Survey, we estimated the relative emissions contribution for each aerosol coating category. The six "General" aerosol coating categories were identified as accounting for approximately 75 percent of the

total aerosol paint VOC emissions in California in 1992. This is shown in Figure II-5 below. Combining the emissions from the specialty categories accounts for the remaining 25 percent of emissions.

Among the general coatings, nonflat ("glossy") coatings represent the largest share of emissions, at about 52 percent of the total emissions from aerosol paints. Flat paints are the next largest category of emissions at about 8 percent of the total emissions. Among the specialty coating categories, the largest categories in terms of emissions are the auto body primer and automotive exact match coatings, each representing about 4 percent of the total emissions from aerosol paint. Several of the specialty coating categories represent less than one percent of the emissions from aerosol paint. The "Other Specialty Coatings" category in the table represents several specialty coating categories collectively. These were combined to protect the confidentiality of data for categories were less than four companies responded to the ARB Survey. The "Other" category represents products which could not be categorized in the ARB Survey by the survey respondent.

**TABLE II-2**
**VOC EMISSIONS BY PRODUCT CATEGORY**

| Aerosol Coating Category | VOC Emissions lbs/Year X 1000 | Percent of Total Coatings Emissions |
|---|---|---|
| General Coatings | | |
| Clear Coatings | 546 | 4 |
| Flat Paint Products | 1,238 | 8 |
| Fluorescent | 211 | 1 |
| Metallic Coatings | 733 | 5 |
| Non-Flat Paint Products | 7,682 | 52 |
| Primer | 678 | 5 |
| Total General Categories | 11088 | 75 |
| Specialty Coatings | | |
| Auto Body Primer | 645 | 4 |
| Automotive Bumper and Trim | 67 | <1 |
| Automotive Exact Match | 573 | 4 |
| Engine Exact Match | 181 | 1 |
| Glass Coating | 6 | 0 |
| Ground Traffic Marking Coating | 400 | 3 |
| High Temperature Coating | 329 | 2 |

TABLE II-2 (continued)
VOC EMISSIONS BY PRODUCT CATEGORY

| Aerosol Coating Category | VOC Emissions lbs/Year X 1000 | Percent of Total Coatings Emissions |
|---|---|---|
| H/M/C Enamel | 102 | <1 |
| H/M/C Lacquer | 16 | 0 |
| H/M/C Clear, Metallic | 410 | 3 |
| Industrial Exact Match | 72 | <1 |
| Spatter Coating | 128 | 1 |
| Vinyl/Fabric/Leather/ Polycarbonate | 74 | 1 |
| Other | 184 | 1 |
| Other Specialty Coatings | 495 | 3 |
| Total Specialty Coatings | 3682 | 25 |

Source: Battelle Report, 1994.

FIGURE II-5
COMPARISON BETWEEN ESTIMATED VOC EMISSIONS FROM GENERAL AEROSOL PAINT CATEGORIES AND SPECIALTY COATING CATEGORIES

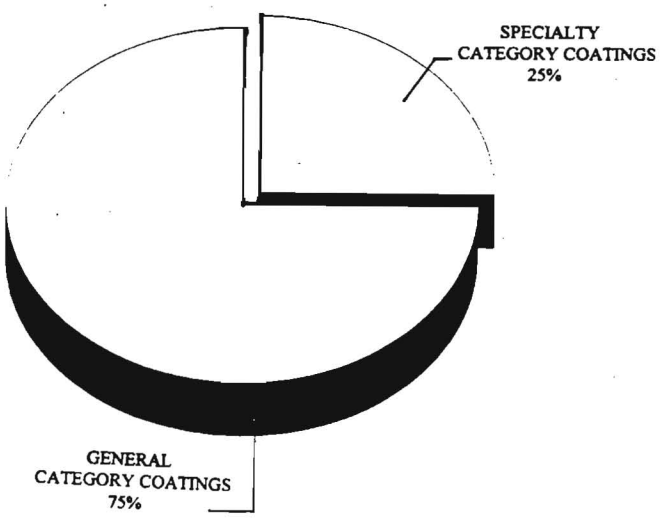


Source: Battelle Report, 1994.

**REFERENCES:**

Battelle Memorial Institute, Survey of Emissions from Solvent-Use-Volume I: Aerosol Paints, Prepared for California Air Resources Board, Contract: A132-085, September 16, 1994.

California Air Resources Board, "Proposed Amendments to the Statewide Regulation to Reduce Volatile Organic Compound Emissions from Consumer Products-Phase II," Technical Support Document, prepared by Stationary Source Division, October 1991.

Calver, J.G., Heywood, J. B., Sawyer, R. F., Seinfeld, J. H., "Achieving Acceptable Air Quality: Some Reflections on Controlling Vehicle Emissions," Science Vol. 261, July 2, 1993, pp. 37-45.

Chemical Specialties Manufacturers Association Incorporated, "Aerosol Pressurized Products Survey United States 1989."

Chemical Specialties Manufacturers Association Incorporated, "Aerosol Pressurized Products Survey United States 1992."

Dill, Larry, "Environmental Update: Paint and Coatings Chemists Must Face Challenges of Industrial Hygiene, Plus Toxicology Concerns and Meeting Environmental Demands," Paint and Coatings Industry, Vol. 6, May 1990, pp. 34-36.

Industrial Colloid Advisory Group, Paint and Surface Coatings: Theory and Practice, R. Lambourne, Editor, 1987, p. 207.

National Paint and Coatings Association, "Aerosol Spray Paint Survey," 1992.

South Coast Air Quality Management District, "Air Quality Management Plan," August, 1994.

Spray-On Products, A Division of Sherwin-Williams, Meeting with ARB staff, February 3, 1994.

# III.

# AEROSOL PAINT INDUSTRY

In this chapter we provide an overview of the structure of the aerosol paint market and present a general description of the various types of aerosol paint available. We have also included a section wherein the technical and physical components involved in the production of a complete aerosol paint package are described.

## A. AEROSOL PAINT MARKET

Aerosol paints represent a large component of the aerosol industry, accounting for 13 percent of the total aerosol market in 1992 (CSMA Survey), but constitute less than 2 percent of the paint industry with respect to the total volume of paint sold. Aerosol paint was first introduced in the 1950's and reached a production peak of 331 million units in 1977. A sharp decline followed in 1978 after chlorofluorocarbons (CFCs) were banned. Recently, however, production has picked up again and has exceeded 1977 levels. Approximately 328 million aerosol paint packages were produced in the United States in 1992 (CSMA Survey). This estimate converts to approximately 40 million units sold in California during the same year (total California sales estimated at 12% of national sales).

### Structure of the Aerosol Paint Market

Several industries are closely associated with the production of aerosol paints such as paint raw material manufacturers, aerosol can producers, valve manufacturers, aerosol can fillers, paint formulators, and the marketing industry. Like the aerosol industry in general, the aerosol paint marketplace is not rigidly defined. Some companies are involved in specialized functions while others are involved in multiple functions such as research and development, product formulation, filling, and marketing. To simplify the understanding of the aerosol paint industry as a whole, this subsection provides brief descriptions of the industry as individual segments.

Raw Material Manufacturers: Raw material manufacturers supply the paint formulators with an abundant selection of raw materials. More than 4000 raw materials are currently available, including pigments, resins, solvents, fillers, propellants, and additives. Both the resin manufacturer and the paint formulator use solvents for the production of their respective products. Aerosol paint manufacturing consumes about 3.5 percent of the entire solvent used by the paint industry (SRI International; The U.S. Paint Industry).

Since propellants are an essential element of an aerosol paint formulation, the propellant industry constitutes an important part of the aerosol paint market. According to the Draft EPA document, "Aerosol Products and Packaging Systems" (December 1991), there are 25 propellant suppliers in the United States. The breakdown of the types of propellants used for all aerosol products are follows: hydrocarbon propellants (81%), carbon dioxide ($CO_2$) propellant (7%), and nitrous oxide ($N_2O$), chlorofluorocarbon (CFC), dimethyl ether (DME), nitrogen gas ($N_2$), hydrofluorocarbon-152a (HFC-152a), and hydrochlorofluorocarbon (HCFC) propellants (12%). According to this report, the propellants of most value to the aerosol paint industry are the hydrocarbon propellants, DME and HFC-152a.

Aerosol Can Producers: Aerosol can producers provide the appropriate cans for use for aerosol paints. The various criteria to consider when producing an aerosol can include can size and type, potential reaction with the formulation, economy, pressure rating, aesthetics, and product safety. Although aluminum cans are produced in the general aerosol market, the 3-piece tinplate aerosol can is the predominant container used in the aerosol paint market.

Approximately 2.5 billion tinplate cans were produced in the U. S. in 1992 (CSMA Survey). Four of the 10 tinplate aerosol can companies reported by the U.S. EPA (Draft EPA document, 12/91) produce over 95 percent of the tinplate cans in the U.S. These four companies are United States Can Company, American National Can Company, Heekin Can Incorporated, and Crown Cork and Seal Company.

Valve Manufacturers: The valve manufacturers are a very important part of the aerosol paint market because they provide a very essential component, namely the valve. The appropriate valve, along with the appropriate formulation and can, will produce the appropriate spray characteristics for the specific application.

In the U.S., there are essentially 5 companies that supply all the valves for use with aerosol paint products (Draft EPA document, 12/91). They are Newman-Green Incorporated, Sprayon Products, Precision Valve Corporation, Seaquist Valve Company, and Summit Packaging Systems. The last 3 companies supply over 90 percent of the valves used in the U.S.

Aerosol Can Fillers: The filling of aerosol paint products requires coordination with most of the component manufacturers described in this subsection. Aerosol can fillers produce the actual product by injecting the product formulation into the aerosol can and sealing it. Filling of aerosol paint cans can be contracted out or done in-house by the paint manufacturer. In the U.S., there are approximately 100 aerosol can fillers, with about 50 being contract fillers and 50 filling for themselves as well as for marketers (Draft EPA document, 12/91). In California, there are approximately 11 aerosol can fillers, with at least 5 of them being contract fillers and the other 6 filling for themselves (ARB # A 732-150).

Paint Formulators: Due to the complexity of the aerosol paint industry today, aerosol paint chemistry has become a specialized field and aerosol paint formulators have become a much valued asset. The paint manufacturers and most private label manufacturers (fillers) have their own paint formulators. Often paint formulators are needed in-house because of their training, experience, and availability to troubleshoot problems that may arise in the aerosol filling lines.

Although the paint formulation may be specified by the marketer, the product formulation is usually developed and blended at the same site where the filling occurs. But in cases where the product formulation is proprietary, the product formulation is blended at one site and shipped to another site for filling. Overall, the purpose of the coating, type of propellant used, valve design, application method, and other factors may influence the final formulation of a spray paint. For example, a thin coat is desirable for automotive touch-up purposes whereas a thicker coat is needed for corrosion inhibitors such as a zinc primer. In many cases, the aerosol paint formulator has to find the right mixture of ingredients by trial and error (Graham,Sprayon, 9/10/93).

Marketing Industry: According to the Aerosol Paint Survey conducted by ARB staff, there were 62 companies that reported sales of aerosol paints in California. Thirteen of these companies were based in California. These California companies represent about 11 percent of the total national sales as shown in Figure III-1.

**Figure III-1**
**California Companies vs National Companies**

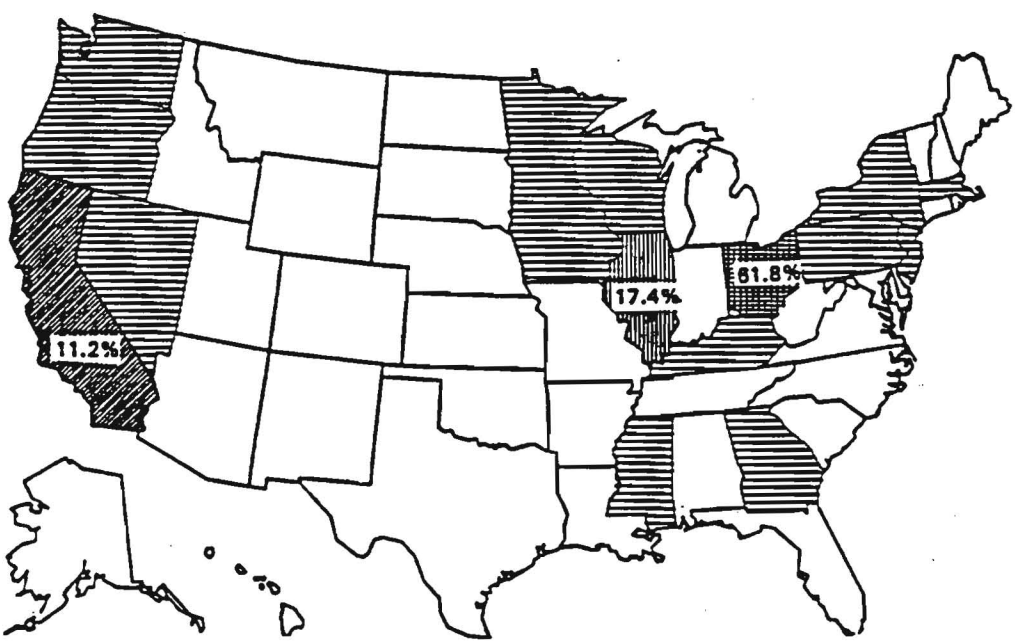


* Shaded states other than California, Ohio, and Illinois account for less than 10% of aerosol paints sold in California.

Source: Battelle Report, 1994.

Aerosol paint marketers constitute a very important segment of the aerosol paint industry. They are involved in the promotion and selling of hundreds of different aerosol paints to industrial, institutional, and home users. They develop goals and strategies based on information obtained from research and development, packaging criteria, economic factors, and product safety. Additional strategies are based on consumer surveys/studies and feasibility. Hence, consumer influence is very important.

When a product is developed, the marketer can produce the product formulation and perform the filling in-house, through contract filling, or both. Since specifications are developed by the marketers, most of the other industries such as the aerosol can producer, valve assembly manufacturer, filler, and formulator simply produce their products according to these specifications.

Due to the diverse nature of the aerosol paint industry, marketers have available to them a wide assortment of business strategies. Some marketers focus on manufacturing high selling, commonly used products while others favor cornering the smaller specialty markets. And still others fall anywhere between these two extremes. The differing marketing strategies places a high requirement on the various parts manufacturers to be flexible enough to deliver a wide range of goods and services to remain competitive in the aerosol paint market.

## B. WHAT IS AN AEROSOL PAINT?

Aerosol paints are defined as pressurized coating products containing pigments or resins where the product ingredients are dispensed by means of a propellant and are packaged in a disposable can for hand-held application, or for use in specialized equipment for ground traffic/marking applications. It is worthwhile to note, that this definition includes both clear coatings and wood stains, two types of coatings that in the traditional interpretation of "coating" would not be included. Traditionally coatings will contain both resins and pigments. However, clear coatings have resins but may not have pigments and wood stains have pigments, but may not have resins. However, both of these coatings are included in this definition because they are used in a manner similar to other coatings for protection and beautifying a substrate. Aerosol paint does not include liquid paints that are sprayed with the aid of spray equipment such as high volume-low pressure spray guns. Additionally, for the purposes of this technical support document, the term "aerosol coating product(s)" will be used interchangeably with the term "aerosol paint(s)."

Types of Aerosol Paints: A wide variety of aerosol paints are available ranging from general purpose flat and nonflat (enamel) coatings that can be used on a wide variety of objects and substrates to specialty coatings that include floral sprays, glass coatings, automotive bumper and trim products, and many other aerosol paints that have more specific end uses. In the proposed regulation, 35 different types of aerosol paints have been identified for control. Of these, six coating categories have been designated as having general purpose uses and 29 are designated as specialty coatings.

As can be deduced from the many types of aerosol paints, aerosol paints have a variety of end uses; however, in most cases they are used for touch-up jobs or painting relatively small objects. Aerosol paints are particularly well suited to painting objects with intricate surfaces such as wicker furniture that are difficult to cover with "brush-on" paints. Aerosol paints are also commonly used for rust protection and to provide a smooth finish without brush strokes. While most aerosol paints are marketed to the general consumer, some products such as aviation zinc primers, weld-through primers, and wood touch-up/repair/restoration coatings are primarily intended for commercial users.

Advantages and Disadvantages of Aerosol Paints: From a users point of view, aerosol paints have many advantages. They do not require additional equipment such as brushes, buckets, clean-up solvents, and rags. The product is ready for use at any time and cannot dry out. The sealed system inside an aerosol paint prevents oxidation of paints and spills. Aerosol coatings can deliver a smooth finish without brush strokes. And, finally, certain coatings, such as spatter coatings, cannot be applied with a brush and must be sprayed on a surface to achieve the proper effect.

There are also some disadvantages that make aerosol paints less attractive. Without appropriate precautions, aerosol paint users may inhale high concentrations of solvent and propellant. Aerosol paints also are relatively expensive as a packaging system compared with their brush-on counterparts. They also tend to have much lower paint solids levels than brush-on paints, which may lead to less coverage. Overspray, which makes careful masking of surfaces not intended for painting necessary, is another problem encountered with aerosol paints. Like other aerosol products, aerosol paints are flammable and can explode when heated above 155° F.

Aerosol Paint Technology: Aerosol paints are the result of applying aerosol product technology to liquid paint products. Aerosol paint is generated from liquid paint through a process called atomization which results in liquid or solid particles of paint having a small diameter. To achieve atomization, an aerosol paint is packaged under pressure in a suitable container, equipped with a dip tube, a valve, and an actuator. A finely atomized spray is delivered when the actuator button connected to the valve is depressed, opening a valve which allows the propellant to force the liquid paint through the dip tube and out of the valve. Aerosol paints consist of three major components: paint, propellant, and an aerosol delivery package. These components are described below.

**Paint**

Generally speaking, paint packaged in nonaerosol cans has similar composition as paint packaged in aerosol cans. However, as will be explained later, the formulation of the paint for incorporation into an aerosol package needs to be modified to allow for the proper spray characteristics. As with bulk or liquid paints, the paint in an aerosol paint is comprised of four major ingredients: pigment, resin, solvent, and additives.

According to the Paint and Coatings Dictionary, pigments are "finely ground, natural or synthetic, inorganic or organic, insoluble dispersed particles which, when dispersed in a liquid vehicle to make paint, may provide, in addition to color, many of the essential properties of a paint...." One of the primary purposes of pigments is to provide for the aesthetic properties of paint such as the color, opacity and sheen. Pigments also help to impart durability to the coating and in some cases, pigments add special properties to the coating. Examples are pigments used to prevent resin degradation due to exposure to ultraviolet light and pigments used to provide corrosion resistance. Some pigments can also be used to help provide fire retardance or to provide nonskid surfaces. (Paint and Surface Coatings-theory and practice, Editor: R. Lambourne p. 111). Several hundred pigments are available for use in aerosol paints (Paint and Surface Coatings). Examples of the more common pigments are titanium dioxide, carbon black, and iron oxides. The concentration of pigments in aerosol paints varies depending on the type of paint. For example, pigment concentration in varnishes or lacquer aerosol paints is about 5 to 6 percent whereas it may reach 15 percent in primers (ARB contract # A 732-150).

The term "resin" refers to a group of various naturally occurring or synthetic compounds that are transparent and have the ability to form a solid film (Paint/Coatings Dictionary). The term resin is used interchangeably with "organic film former" (Paint and Surface Coatings) or "film-forming binder" (ARB contract A 732-150). Functions of resins include protection of substrates through chemical and physical actions and binding of the pigment to the substrate. Pigments and resins together are referred to as "solids" in a paint formulation. Resin types found in aerosol paints include various forms of acrylics, alkyds, urethanes, nitrocellulose resins, epoxies, and others. The resin type used in an aerosol paint greatly affects the properties of the dry paint film. Therefore, a paint formulator must choose the resin with the appropriate properties, such as resistance to wear, sunlight, moisture, chemicals, and heat. For example, epoxies may be used if resistance to abrasion and marring is desired, while silicone modified alkyds may be used to formulate heat resistant coatings.

Solvents have many functions in aerosol paints. They reduce the viscosity of the formulated paint, help solubilize nonpolar propellants, aid in delivering an even paint film through control of evaporation parameters, and help with the atomization of the paint. Many different solvents can be used in paint formulations. Typical solvents used in aerosol paints include alcohols, ketones, aromatics, aliphatics, esters, and water (Graham, Sprayon, 9/10/93). The choice of solvent(s) depends on such factors as type of resin used, choice of propellant, and desired drying time of the applied paint. It is also necessary to consider solvent characteristics such as solvency, boiling point, evaporation rate, flash point, odor, toxicity, and cost (Paint and Surface Coatings). For most aerosol coatings, a blend of solvents is added, totaling approximately 50 to 60 percent by weight in aerosol paints and 30 to 40 percent in aerosol primers (ARB contract A 732-150). In the case of waterbased coatings, much of the organic solvents are replaced with water and the hydrocarbon propellants are replaced with dimethyl ether propellant.

The amount of solvent needed to apply aerosol paints can differ greatly from that needed for liquid paints. This is attributed to the paint formulation and the way in which it can be applied. There is more versatility to formulating liquid paints because they can be applied in several ways such as by brush, roller, pad, or compressor spray. This versatility thus allows more flexibility in the amount of solvent that is needed, which in many cases can be minimal. However, by its nature of application, aerosol paints need a higher minimum amount of solvent to ensure that proper viscosity of the paint formulation is achieved to obtain adequate atomization and attainment of the appropriate spray characteristics.

One of the primary considerations in the choice of solvents used in a formulation is the rate at which they evaporate. If evaporation proceeds too fast, bubbling may occur in the paint film, the resin may precipitate, or water in the environment may condense onto the fresh, cold paint film. On the other hand, the solvent must evaporate fast enough to allow paint to dry in a reasonable amount of time and to overcome the cooling effect caused by rapidly evaporating propellant, which tends to slow down evaporation. Typically, a mix of solvents with different evaporation rates is chosen to ensure the desired paint performance.

Additives are specialized chemicals included in aerosol paint formulations to address specific problems or enhance paint properties. They are usually present in small quantities, typically less than 5 percent of the total product weight (Graham, Sprayon,9/10/93). Some of the commonly found additives in aerosol paints include anti-settling agents, driers, plasticizers, and dispersion aids. These different additives are briefly described below.

Anti-settling agents are typically used to prevent settling of pigments during product storage. Examples are soy lecithin or aluminum stearate (Paint and Surface Coatings). Driers are usually metal compounds of organic acids which speed up the chemical reactions that occur during the drying of a paint. Examples include cobalt or calcium naphthenate. Another category of additives are plasticizers. Plasticizers improve the flexibility and adhesion of the paint film. They are frequently added to nitrocellulose lacquers. One example is dimethyl phthalate. Dispersion aids (surfactants) are used to optimize the dispersion of pigment in the resin. The choice of dispersant is specific to the individual paint formulation. Examples of dispersion aids are fatty acid derivatives of glycerols.

**Propellant**

Propellants are gases that exert a high vapor pressure at room temperature when confined in a sealed container (The Aerosol Handbook). The propellant typically constitutes about one-third of the formulation of an aerosol paint (Strobach, American Paint & Coatings). Propellants currently used in aerosol paints are hydrocarbons such as n-butane, isobutane, propane, and, in waterbased paints, dimethyl ether. These propellants are all considered to be VOCs. A non-VOC propellant that may be more widely used in the future is 1,1-difluoroethane (hydrofluorocarbon-152a, or HFC-152a).

The propellants used in aerosol paints vary in pressure from about 17 psig (pounds per square inch above atmospheric pressure) for n-butane to 109 psig for propane. Hydrocarbon propellants are typically used in solvent-based coatings and are available in different degrees of purity. For aerosol products, the grade of hydrocarbons is designated with the letter "A"; and the vapor pressure of the propellant is displayed together with the letter. For example, A-46 would designate an aerosol grade propellant that has a vapor pressure of 46 psig at 70° F. In aerosol paints; however, commercial grade propellants are often used to lower costs. Commercial grade propellants tend to be somewhat malodorous and are therefore not desirable in many other aerosol products. Typically, hydrocarbon blends such as propane and isobutane are used as the propellant.

The function of a propellant in aerosol paints is to expel the paint through the valve of an aerosol container. In the high pressure environment inside an aerosol container, "liquefied gas propellants" such as hydrocarbon propellants, dimethyl ether, and HFC-152a, exist in both the gas phase and the liquid phase and will form an equilibrium between the two phases. This provides the constant internal pressure needed to ensure complete evacuation of the contents of an aerosol product. As the amount of product in the can decreases through usage and the head space (the volume above the liquid level in the can) increases, the liquid propellant will evaporate and immediately re-establish the initial vapor pressure, maintaining the equilibrium between gas and liquid phase, and maintaining a constant gas pressure inside the can.

Propellants also aid in the atomization of the aerosol product. When an aerosol product is sprayed, liquid propellant is released together with the liquid paint in tiny droplets. The liquid propellant, which is a gas at room temperature and pressure, quickly evaporates from the paint spray droplets, reducing their size and creating a finer spray. In addition, the collision of propellant molecules with solvent molecules leads to a disruption of attractive forces between the solvent molecules themselves and breaks up the spray pattern into an even finer spray.

Propellants must meet several criteria to be used in aerosol paints including nonreactivity with the product or product container and low toxicity to the user since some propellants may be inhaled during use. Hydrocarbon propellants are highly flammable, but are noncorrosive, stable, and have low toxicity, (Handbook of Aerosol Technology; & J.R. Frauenheim, Spray Technology). Dimethyl ether has a reduced flammability in waterbased formulations due to its water solubility.

The paint components described above play important roles in providing a functional and quality product. However, there are other important components of an aerosol product that must operate in concert with the formula and aid its proper application to the substrate. These components are described below in the next subsection.

**Aerosol Delivery Package**

The aerosol delivery package is a very important part of the aerosol product because it is comprised of those components that prevent the product from being released accidentally, allow the product to be transported, handled, and stored indefinitely, and to be properly applied to the substrate when needed. It usually consists of a plastic over-cap, "stirring ball," can, and valve assembly. A description of each of these components follows.

Over-Cap: Over-Caps serve to protect the outer valve assembly from damage and accidental discharge during transportation, handling, and storage. They also prevent the accumulation of dust and dirt, help to enhance the overall appearance of the can, and are color-coded to represent the color of the paint inside the can. Virtually all of the millions of over-caps produced annually for aerosol paints are made of plastic. In the U.S., there are 11 over-cap manufacturers (Draft EPA document, 12/91). Over 90 percent of these caps are produced by two companies, Berry Plastics and Knight Plastics.

Stirring Ball: The "stirring ball" is a marble or other spherical object. It is used as an aid in mixing the paint when the product is shaken during use. The sound made by the stirring ball may also aid in estimating the approximate amount of paint left in the can.

Can: The can is a critical component of the aerosol product because it must be cost-effective, attractive to the consumer, and compatible with the product. It must also be able to withstand the pressure of the product formulation without bursting or leaking. The typical container for aerosol paints is a standard three-piece, welded side seam, steel, tinplate can. To a lesser extent, aluminum aerosol cans are also used.

The three-piece can consists of a top endpiece or dome, main body, and bottom endpiece. The dome has a conical shape to withstand high pressures, a 1-inch hole in the top to hold the valve assembly, and a vertical section to hold the over-cap in place. The main body is cylindrical in shape and the primary consideration for its design is the package size and geometry. For example, a can with a small body will hold less volume and have fewer product applications and although a larger can will hold more volume, it may be more difficult to hold. The bottom endpiece is designed as a concave disk to withstand the internal pressure of the propellant.

Commercially available cans hold a net weight of 3 ounces to 24 ounces (NPCA, 1992). However, most cans that are produced hold 10 or 12 ounces. The can size can be identified by measuring its diameter and height. The diameter is measured at the bottom of the can and the height is measured from the base of the can to the top of the top double seam where the dome cap meets the main body of the can. The measurements are given as a 3-digit number. The first digit represents the number of inches and the remaining two digits represent the number of sixteenths of an inch. For example, the measurement 202 x 406 represents a can with a diameter of 2 2/16 inches and a height of 4 6/16 inches.

Valve Assembly: Most valve assemblies have as many as seven components: the actuator, mounting cup, stem, stem gasket, spring, body (or housing), and dip tube. Although several different types of valves exist, only two representative valve types, vertical valves and female valves, will be discussed here. Figures III-2 and III-3 are diagrams of a vertical valve assembly. Descriptions of the individual components are provided in the following sections.

**Figure III-2**
**Vertical Valve Assembly**

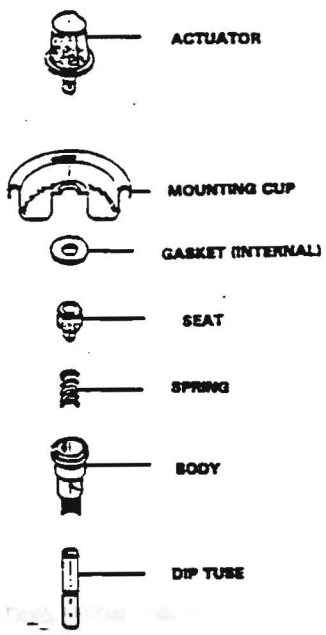


**Figure III-3**
**Vertical Valve Assembly - Opened and Closed**

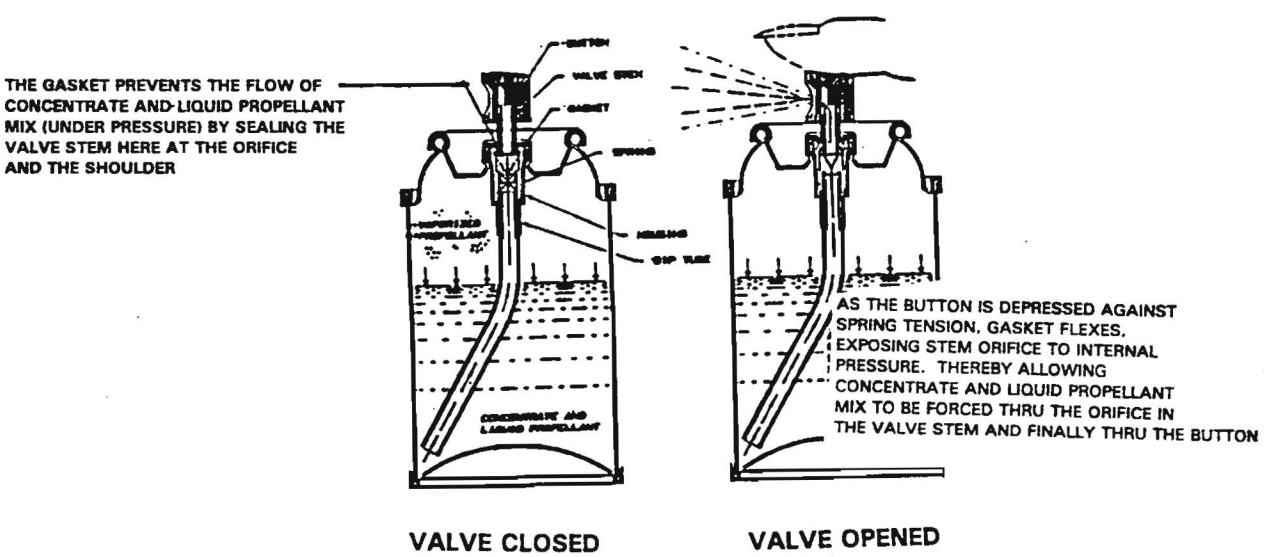


Source: (Figures 1 & 2) Draft U.S. EPA Report to Congress, Volatile Organic Compound Emissions from Consumer and Commercial Products, *Aerosol Products and Packaging Systems*, December 1991.

Actuator: The function of the actuator is to operate the valve and regulate the spray rate, spray pattern, and particle size. Some actuators allow a direct flow path for the product. Other actuators have what is called a mechanical breakup system which consists of swirl chambers and bends in the flow path that mechanically enhance the breakup provided by the propellant. Various types of mechanical breakup systems can be used depending on the type of spray characteristics desired.

Mounting Cup: The mounting cup provides an "anchor" where the outside edge of the stem gasket can be clamped between it and the valve body to keep the stem gasket in one place. The mounting cup is also used as the hermetic seal to the 1-inch hole in the aerosol can. Mounting cups can be manufactured in conical or flat cup shapes (Figure III-4). The conical shape is used to elevate the actuator to allow a wide-angle spray to clear the edge of and to increase the strength of the mounting cup. Depending on the type of product used, the underside of the mounting cup may also be lined.

**Figure III-4**
**Mounting Cups**

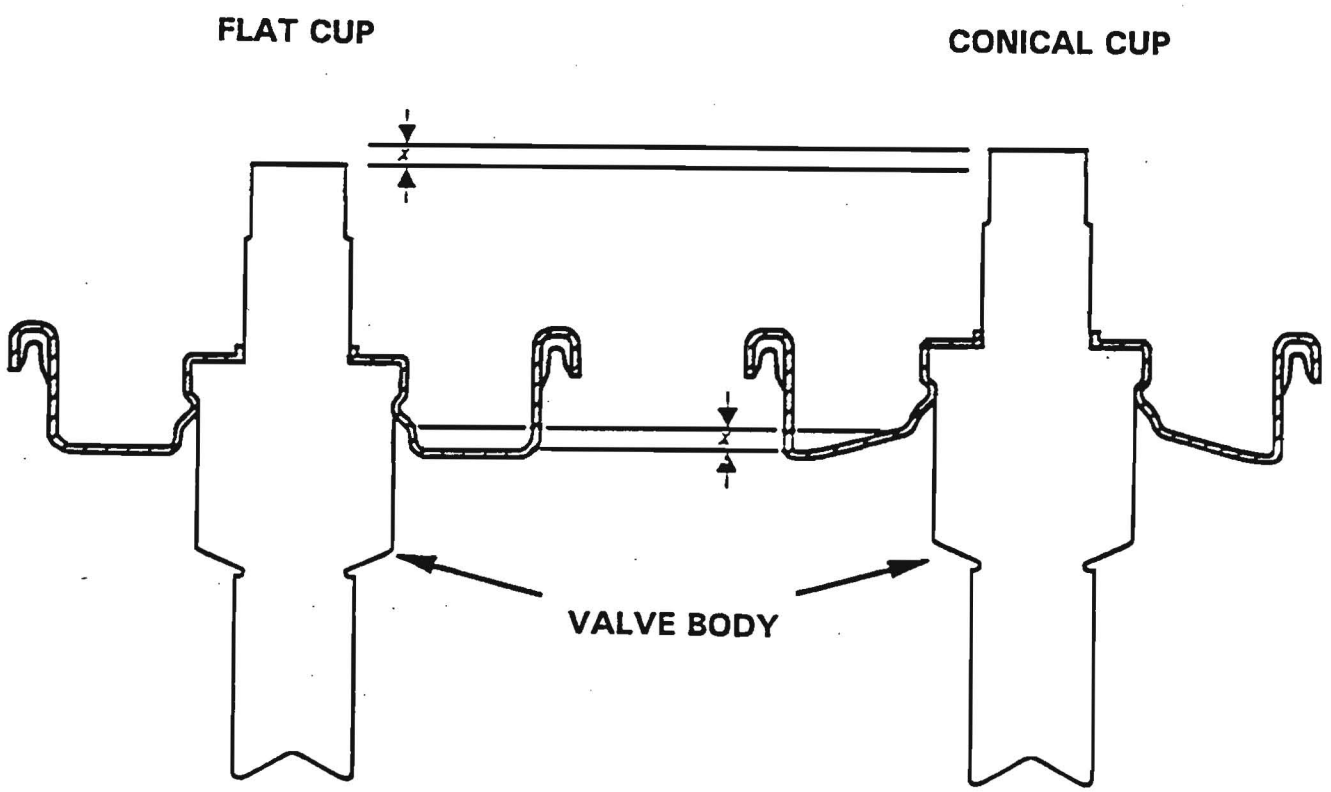


Source: (Figures 1 & 2) Draft U.S. EPA Report to Congress, Volatile Organic Compound Emissions from Consumer and Commercial Products, *Aerosol Products and Packaging Systems*, December 1991.

Valve Stem: The valve stem is what allows an aerosol paint to be applied. The valve is closed when the can is not in use. When the user opens the valve by depressing the actuator, the pressure from the propellant inside the can forces paint up through the dip tube, through the orifice in the neck of the valve stem, through the large opening at the top of the stem, and finally through the actuator.

Usually a valve design that allows easy removal of the actuator for cleaning purposes is used, since clogging of the actuator caused by dried paint can be a problem. In this case, use of a female valve is especially helpful. The female valve is more useful here than a typical male valve because its valve stem is part of the actuator and can be removed for cleaning.

Orifice sizes of valve stems can range from 0.01 to 0.05 inches. If an orifice is too small, it may be prone to plugging. If the orifice is too large, the valve stem can become weaker and the risk of breaking the valve stem increases. Valve stems can be manufactured in different lengths so that the height of the actuator above the mounting cup can be controlled.

Stem Gasket: The stem gasket fits around the neck of the stem to seal the stem orifice so that the product does not leak out when the actuator is not depressed. The stem gasket has to be made of a flexible-type material so that, when the actuator is depressed, the gasket is bent and the orifice is exposed to the product. In addition, the stem gasket material must be compatible with the product because any deterioration or swelling of this part may result in the product leaking out of the can.

Dip Tube: The dip tube acts as a flow metering device and serves to transfer the product to the valve body. The greater the dip tube diameter is, the more product can be delivered to the valve body. Some other factors that affect the selection of the dip tube are can size, curvature, and tube material. In some aerosol paints such as those used for ground marking applications, the dip tube is omitted because the can is used while upside down.

Valve Body: The valve body, or housing, serves as an enclosure for the spring to maintain force of the stem against the stem gasket when the actuator is not depressed. The bottom portion of the valve body has an extension which the dip tube fits into. When the actuator is depressed, the product flows from the dip tube into the reservoir and is forced through the stem orifice. Some valve bodies have a vapor tap hole that is exposed to the head space in the can (Figure III-5) to allow propellant vapor into the liquid stream to produce a greater breakup and a lower delivery rate.

**Figure III-5**
**Hole in Valve Stem**

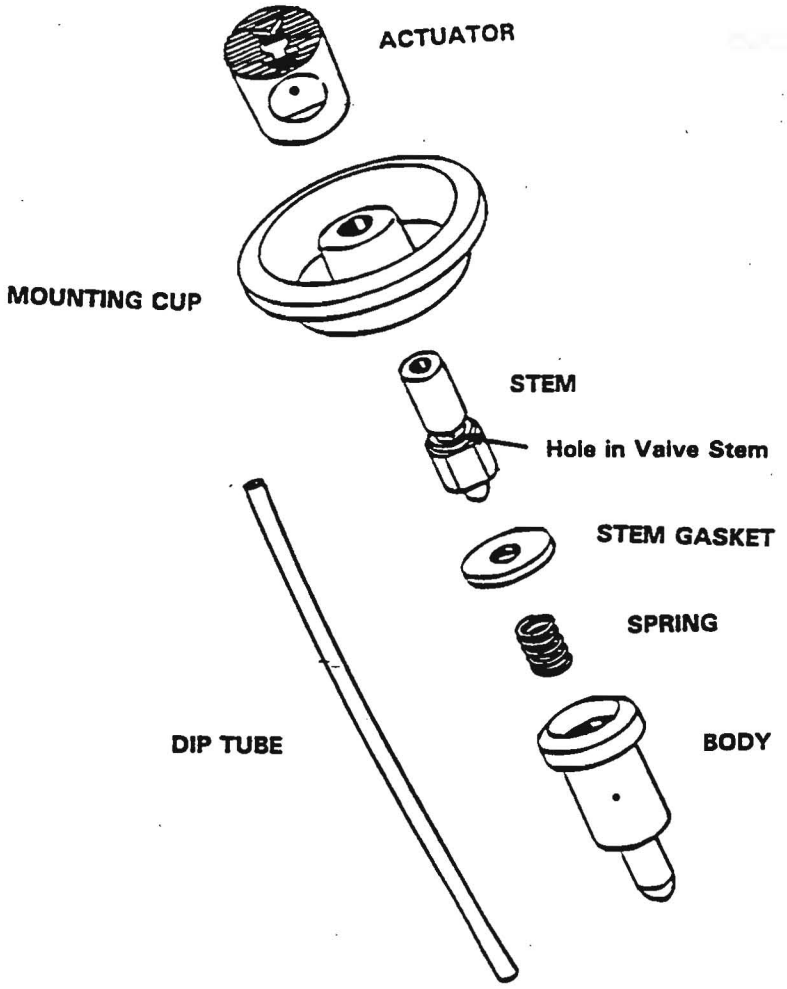


Source: (Figures 1 & 2) Draft U.S. EPA Report to Congress, Volatile Organic Compound Emissions from Consumer and Commercial Products, *Aerosol Products and Packaging Systems*, December 1991.

## REFERENCES


Battelle Memorial Institute, Survey of Emissions from Solvent Use-Volume I: Aerosol Paints, Prepared for California Air Resources Board, Contract A132-085, September 16, 1994.

Chemical Specialties Manufacturers Association Incorporated, "Aerosol Pressurized Products Survey United States 1992."

Federation of Societies for Coatings Technology, Paint/Coatings Dictionary, Federation of Societies for Coatings Technology, Philadelphia, Pennsylvania, 1978.

Frauenheim, J. Richard, "Hydrocarbon Propellants in the '90s," Spray Technology & Marketing, July 1991.

ICF Consulting Associates, Incorporated, Contract No. A732-150, Final Report, Study of Economic Incentives to Control Photochemically Reactive Organic Compound Emissions from Consumer Products, Prepared for California Air Resources Board, Research Division, August 1990.

Industrial Colloid Advisory Group, Paint and Surface Coatings: Theory and Practice, R. Lambourne, Editor, 1987, p. 111.

Johnson, M. A., The Aerosol Handbook, Wayne Dorland Company, Mendham, New Jersey, 1982.

National Paint and Coatings Association, "Aerosol Spray Paint Survey," 1992.

Sanders, Paul A., Handbook of Aerosol Technology, 1987.

Sprayon Products, Telephone conversation with Bob Graham to ARB staff, September 10, 1993.

SRI, International, U.S. Paint Industry Database, Prepared for the National Paint and Coatings Association, Inc., September 1990.

Strobach, Donald R., "Water-based aerosols formulated with dimethyl ether propellant," American Paint & Coatings Journal, July 9, 1990.

United States Environmental Protection Agency, Draft Report, "Aerosol Products and Packaging Systems," December 1991.

# IV.

## DESCRIPTION OF PAINT CATEGORIES PROPOSED FOR REGULATION

In this chapter, we have provided descriptions of the 35 categories of aerosol paint products proposed for regulation. The 35 categories of products are subcategorized into six general coating categories, and 29 specialty coating categories. The section on each product category includes the following topics: "Product Description," "Product Use," "Product Marketing," "Product Formulation," and "Proposed VOC Standard." Under "Product Description," the product category is defined and the estimated sales and emissions for the product are provided. The estimated sales and associated emissions data were based on ARB's Aerosol Paint Survey as of September, 1994, and do not reflect late submittals. To maintain the confidentiality of proprietary data, the estimated sales and emissions data are presented in the aggregate, with data being shown only for paint categories with 4 or more companies responding to the survey. In cases where data from less than 4 companies is presented, ARB staff received written permission to report the data. The "Product Use" section describes the applications for which the product was designed and, if appropriate, any special application techniques that are required. The "Product Marketing" section describes where products are sold, identifies the product marketers and provides a brief summary of the market positioning-whether the product is sold for household, industrial, or both uses. Under "Product Formulation" a description of the product ingredients, including resins, pigments, solvents and propellants, is provided. Finally, under "Proposed VOC Standard," the recommended 1996 VOC limit for the category is discussed. The proposed 1999 standards are not discussed in this chapter because the methods of achieving compliance with the final (December 31, 1999) VOC standards will in large part depend on the technological developments that occur prior to the 1999 standards, and the outcome of the required hearing on the commercial and technological feasibility of the 1999 standards.

### A. CLEAR COATINGS

Proposed VOC Standard (1996): 67.0%

Product Description:

Aerosol clear coatings are general use coatings that are colorless and contain resins, but no pigments or fillers other than flatting agents. Flatting agents (also called flatting pigments), may be included in the formulation to decrease the gloss of a clear coating without

adding color to the film. Clear coating products are formulated with a variety of resin types and are often labeled as "varnishes," "polyurethanes," "lacquers," or "acrylics."

There are several "specialty" coating categories defined in the proposed regulation that may also include clear coating products. However, these clear coatings, which perform specialized functions, would not be included in the general clear coating category. Examples of specialty categories that include clear coatings are the "art fixative or sealant" category, the "corrosion resistant brass, bronze, or copper coating" category, and the "photograph coatings" category, among others. Clear coating products with specialized uses which are not described by any of the specialty categories defined in the proposed regulation would be categorized in the general clear coating category.

The aerosol clear coatings category is the sixth largest aerosol paint category in terms of sales and emissions according to the ARB Aerosol Paint Survey. As shown in the table below, clear coatings had estimated sales of 635,000 pounds in 1992, or about 3.6 percent of the aerosol paint market. The VOC emissions from this category accounted for an estimated 538,000 pounds, or about 4.0 percent of the emissions from aerosol paints.

**Table IV-1**
**Clear Coatings**
**Summary of Estimated 1992 Emissions and Sales**

| Number of Products | Total Category Sales (Lbs/Yr) | Market Share (%) | Emissions (Lbs/Yr) | Emissions (% of total) |
|---|---|---|---|---|
| 102 | 635,000 | 3.6% | 538,000 | 4.0% |

Source: Battelle Report, 1994.

Product Use:

Clear coatings are designed for a variety of uses, including the finishing of wood surfaces, metal, ceramics, fabrics, and paper. Clear coatings are most often used on wood surfaces, either natural or stained, for protective and decorative purposes. Typical uses include the coating or touch-up of indoor and outdoor furniture, household trim and doors, cabinetry, wood paneling, small objects, and arts and crafts. Aerosol clear coatings may also be used in some cases as a final coating over brushed on clear coatings to provide a smooth surface without brush strokes. Industrial uses include the touch-up of production goods, and the protection of metal, chrome, and brightwork.

Clear coatings are applied in a manner similar to other aerosol paints. Prior to application, the surface to be painted should be clean, dry, and free of wax, grease, oil, polish, loose paint, and rust. The product should be shaken well before use and occasionally during use, to ensure that the product is mixed. Manufacturers generally recommend that their

products be applied in several light coats to prevent runs or sags. A recommended spray distance (typically a range somewhere between 6 and 15 inches) is also usually specified on the product container. Most product labels also recommend that the product be used above a minimum temperature or within a certain temperature range (often between 70° and 80° F). After use, products should be sprayed upside down to clean valve and actuator orifices of paint solids.

Product Marketing:

Clear aerosol products are sold in a variety of retail outlets, including hardware stores, paint stores, home improvement centers, discount stores, and arts and crafts shops. Clear aerosol products are often marketed by emphasizing special properties such as fast dry times, durability in outdoor environments, hardness, resistance to abrasion, and resistance to water, spills, and stains.

The following 27 companies have been identified in ARB's Aerosol Paint Survey as manufacturing or marketing clear aerosol products:

Ace Products*
Barrier International Corp.*
**Behr Process Corporation**
Coverite/Div of US Hobby*
DAP Incorporated*
**Deft Incorporated***
**Duncan Enterprises***
**Dunn-Edwards Corporation**
Dynatron/Bondo Corporation
**Flecto Company Incorporated***
Imperial Paint Company*
K-Mart
Krylon/Dupli-Color Products
Loctite Corporation
Minwax Company
Plasti-kote Company*
PPG Industries Incorporated
Rust-oleum Corporation
Sherwin-Williams
SprayOn Industrial
State Chemical Corporation
Thompson Formby Incorporated*
Tru-Test Manufacturing Company
United Coatings Inc.
Valspar Corporation
XIM Products Inc.*
**Zynolyte Products Company**

Of these manufacturers, 6 are California based companies. These companies are highlighted in **bold** text. Eleven companies identified themselves as small businesses in the ARB Aerosol Paint Survey. These companies are denoted with an asterisk (*).

According to the ARB Aerosol Paint Survey, 88 percent of clear aerosol products were sold for household/consumer use, with only 2 percent sold for industrial use, and 10 percent sold for either use. The ARB Aerosol Paint Survey data also showed that about 10 percent of clear coatings were marketed for sale exclusively in the Bay Area in order to comply with the Bay Area Air Quality Management District's aerosol paint regulation (Rule 8-49).

Product Formulation:

As mentioned in "Product Description," clear coating products contain resins, but no pigments or fillers other than flatting agents. Flatting agents are compounds such as silica added to a coating to reduce the gloss of the coating without adding color to the coating.

Several different resin types are currently used in clear coating formulations, depending on the desired "dry film" properties, the properties of the coating after it has dried. Typical resins used include alkyds, polyurethanes, nitrocellulose lacquers, acrylic lacquers, and combinations of resins. Although coating properties vary with individual formulations, industry sources report that certain resin types generally yield particular coating characteristics. For instance, polyurethane resins are reported to yield coatings that are hard and resistant to scratches and abrasion, while acrylic lacquers are known for their resistance to "yellowing" (Seymour of Sycamore).

Clear coatings generally have less total solids than other aerosol paints and higher VOC contents because they do not contain pigments or fillers (other than flatting agents). According to the ARB Aerosol Paint Survey, clear aerosol coatings have a sales-weighted average solids (resin) content of approximately 13 percent, compared to 18 percent for nonflat paints and 21 percent for flat paints.

The types of solvents and propellants used to formulate clear aerosol coatings are similar to those used in other aerosol paints (Flecto, circa 10/6/93). These solvents include petroleum distillates, aromatics such as zylene and toluene, alcohols, and ketones. One exception is nitrocellulose lacquers which require the use of more expensive solvents such as esters and ketones, rather than aromatics or aliphatics (Seymour of Sycamore). Water-borne products typically contain alcohols, glycol ethers, and other water-soluble solvents. The propellants used in clear coatings are hydrocarbons such as isobutane, n-butane, and propane, or dimethyl ether in water-borne products.

The VOC content of clear coatings is typically higher than the VOC content of flat and nonflat aerosol paints because the only solids contained in these products (other than flatting agents) are the resins. Although resins are generally nonvolatile, they increase the viscosity of the formulation more than other paint solids, making it more difficult for most companies to develop a product with high resin content that will spray out in a fine mist. As such, clear aerosol coatings are currently formulated with more solvent in the formulation which results in a higher VOC content than most pigmented coatings. The ARB Aerosol Paint Survey shows that clear coatings have a sales-weighted average VOC content of about 85 percent, with a range from 50 to 97 percent. The VOC content is contributed by both the solvents and propellants used in these products. According to the ARB Aerosol Paint Survey, the sales-weighted average percentage of solvent and propellant in clear coatings was approximately 59 percent and 25 percent, respectively.

Solvent-borne clear coatings dominate the market, having 94 percent of the sales in this category. Solvent-borne clear coatings also have higher VOC contents than the water-borne clear coatings. According to the ARB Aerosol Paint Survey, the sales-weighted average VOC content for solvent-borne clear coatings was 86 percent, whereas water-borne coatings had a sales-weighted average VOC content of 66 percent. A very small percentage of clear coating products contain the solvents methylene chloride or 1,1,1-trichloroethane. According to the ARB Aerosol Paint Survey, 3,400 pounds of these exempt compounds were reported being used in clear coatings.

Proposed VOC Standard:

The proposed VOC limit for clear coatings is 67 percent by weight. This proposed standard is consistent with the Bay Area Air Quality Management District's Rule 8-49, which has required aerosol clear coatings to meet a 67 percent standard since June, 1990.

We are proposing a 67 percent VOC standard because the technology currently exists to produce a commercially viable product at this VOC level. As shown in the ARB Aerosol Paint Survey, there are six complying clear coatings being marketed by the following five companies without the use of methylene chloride or 1,1,1-trichloroethane: DAP, Incorporated, Flecto Company, Inc., K-Mart, Sprayon Products, and Zynolyte Products Company. According to the ARB Aerosol Paint Survey, the six products account for an estimated 13 percent of the market (in pounds). Three of the six clear coating products identified in the ARB Aerosol Paint Survey which comply with the proposed 67 percent standard were not identified as products sold exclusively in the BAAQMD, an indication that the manufacturer believes these products have performance characteristics that allow them to successfully compete in the marketplace with higher VOC products outside the Bay Area.

A variety of technologies are being utilized by manufacturers to meet the proposed 67 percent VOC limit. These technologies include both water-borne and high-solids solvent-borne systems, as described in Chapter V. According to one manufacturer, high-solids systems and water-borne acrylic and polyurethane emulsion and dispersion technology, are advancing very rapidly (Flecto, 6/9/94). In addition, water-reducible modified alkyd systems are reportedly yielding good products (Zynolyte). In one instance, it was reported that "the solvent based line [of clear coatings at or below 67%] has enjoyed steady sales and good consumer acceptance (Flecto, 4/16/93)." In another example, a manufacturer reported that they had developed a water based acrylic aerosol coating (both clear and pigmented) "... which not only has VOC levels well below the most stringent VOC limits (BAAQMD Regulation 8 Rule 49) but also has performance characteristic [sic] that rival current solvent-borne aerosol coatings (DAP, Inc.)."

Although some manufacturers have proposed higher VOC limits for clear coatings, we believe the technology exists to produce clear coatings at 67 percent VOC which are commercially and technologically feasible. It should also be noted that the clear coatings category is one of the larger aerosol paint categories, the sixth largest in terms of both sales

and VOC emissions, and as such, the emission reductions garnered from this proposed standard will significantly impact the overall emission reductions from the proposed regulation.

**REFERENCES**

Air Resources Board Aerosol Paint Survey, February 25, 1993.

Battelle Memorial Institute, Survey of Emissions from Solvent Use-Volume I: Aerosol Paints, Prepared for California Air Resources Board, Contract A132-085, September 16, 1994.

DAP, Inc., Letter to ARB staff, August 23, 1993.

Flecto Company, Inc., Telephone conversation with ARB staff, circa October 6, 1993.

Flecto Company, Inc., Letter to ARB staff, April 16, 1993.

Flecto Company, Inc., Telephone conversation with ARB staff, June 9, 1994.

Seymour of Sycamore, Telephone conversation with ARB staff, circa October, 1993.

Zynolyte Products, Telephone conversation with ARB staff, June 8, 1994.

## B. FLAT PAINT PRODUCTS

Proposed VOC Standard (1996): 60.0%

Product Description:

Flat aerosol paint products are aerosol paints with a low gloss level, as described below, or aerosol paints that are labeled as flat coatings, whether or not they meet the gloss level criteria for a flat coating. Flat aerosol paint products are primarily general use aerosol paints that do not fall under one of the other coating categories. However, special-use flat paints that also do not fall under one of the other coating categories in the regulation would also fall under the flat paint category.

A coating must register a specular gloss level that is less than or equal to 15 on an 85° meter, or less than or equal to 5 on a 60° meter, to qualify as "flat." The gloss level is measured by a special gloss meter which measures the amount of light reflected off the coating specimen. The gloss meter consists of a light source that directs a beam at the coating and measures the reflected light in the mirror direction. The degree of the angle used to describe the meter (e.g. 85° meter) refers to the angle of the light beam which is reflected off the coating surface. The gloss value is a relative value compared to a known standard such as black glass.

The flat aerosol paint category is the second largest aerosol paint category in terms of both sales and VOC emissions. As summarized in Table IV-2 below, sales of flat paints were estimated to be 1.6 million pounds in 1992, constituting 9.1 percent of the aerosol paint market and accounting for 9.0 percent of the total VOC emissions, at an estimated 1.2 million pounds of volatile organic compounds in 1992.

**Table IV-2**
**Flat Paint Products**
**Summary of Estimated 1992 Emissions and Sales**

| Number of Products | Total Category Sales (Lbs/Yr) | Market Share (%) | Emissions (Lbs/Yr) | Emissions (% of total) |
|---|---|---|---|---|
| 79 | 1,600,000 | 9.1% | 1,215,000 | 9.0% |

Source: Battelle Report, 1994.

Product Use:

Flat aerosol paints are general use products that are employed for a wide variety of purposes whenever a flat finish is desired. As with other aerosol coatings, flat paint products can be used to protect objects from rust and corrosion, for decorative purposes, for coating small objects or doing "touch-up" work, for painting objects that would be hard to coat with a brush, such as wicker, and when a smooth finish without brush strokes is desired. Typical objects that consumers paint with flat paint products include: children's toys, lawn furniture, ironwork, arts and crafts, and general outdoor equipment, such as tools and lawnmowers. Industrial uses of flat aerosol paints include the coating and touch-up of pipes, ductwork, motors, machinery, and general equipment.

Flat aerosol paints are applied similar to most other aerosol paints. Prior to application, the surface to be painted should be clean, dry, and free of wax, grease, oil, polish, loose paint, and rust. The product should be shaken well before use and occasionally during use, to ensure that the product is mixed. Manufacturers generally recommend that their products be applied in several light coats to prevent runs or sags. A recommended spray distance (typically a range somewhere between 6 and 15 inches) is also usually specified on the product container. Most product labels also recommend that the product be used above a minimum temperature or within a certain temperature range (often between 70° and 80° F). After use, products should be sprayed upside down to clean valve and actuator orifices of paint solids.

Product Marketing:

Flat aerosol paints are sold in a variety of retail outlets, including paint stores,

hardware stores, home improvement centers, hobby/craft stores, and discount stores. Flat paints are marketed in many different ways. Some are sold as general, all-purpose products, while others emphasis specific qualities such as rust protection, unique decorator colors, environmentally beneficial water-borne formulas, quick dry times or specific resin types, such as epoxy or polyurethane. In addition, some are marketed as "premium" or higher quality products, while others emphasize low cost.

The following 18 companies have been identified in the ARB Aerosol Paint Survey as manufacturing or marketing flat aerosol paint products:

| | |
|---|---|
| Ace Products* | Krylon/Duplicolor |
| Aervoe-Pacific Company* | Plasti-kote Company* |
| Coverite/Division of US Hobby* | PPG Industries |
| DAP, Inc.* | Rudd Company Inc.* |
| Drummond American Corp. | Rust-oleum Corporation |
| **Duncan Enterprises*** | Sherwin-Williams |
| Imperial Paint Company* | Sprayon Industrial |
| K-G Packaging | State Chemical Company |
| K-Mart | **Zynolyte Products Co.** |

Of these manufacturers, 2 are California based companies. These companies are highlighted in **bold** text. Eight companies identified themselves as small businesses in the ARB Aerosol Paint Survey. These companies are denoted with an asterisk (*).

According to the ARB Aerosol Paint Survey, flat aerosol paints sold for household/consumer use accounted for an estimated 44 percent of the flat aerosol paint market, with sales of industrial use products at 9 percent, and products sold for either use accounting for 47 percent of the market. Less than 1 percent of the products sold in California in 1992 were marketed specifically for use in the Bay Area Air Quality Management District (BAAQMD) in order to comply with the BAAQMD's aerosol paint rule.

Product Formulation:

Flat aerosol paint formulations vary with the intended use of the product, cost, and the individual color. One of the key components of the formulation, in terms of its effect on the properties of the dried paint film, is the resin. There are several types of resins that are used in flat aerosol paints. These include alkyds, acrylic and nitrocellulose lacquers, epoxies, polyurethanes, and various combinations of these resins. Alkyd resins are used most often and are usually "modified" with chemical groups which enhance particular properties such as drying time or hardness. Most flat spray paints, other than lacquers, are simply referred to as "enamels" on the aerosol can. Aerosol paints labeled as enamels dry by a chemical reaction of the resin upon exposure to air. Lacquers, on the other hand, dry by evaporation of solvent alone. Water-borne products tend to use water-soluble alkyd resins, acrylic lacquer emulsions, or a combination of these two technologies (Seymour of Sycamore, 11/15/93).

The other paint solids, the pigments and fillers, will vary with the color of the paint and the particular product. However, despite the variations in the amount of solids with the particular color, flat paints overall tend to have a higher concentration of pigments and fillers relative to the total paint solids (which includes the resin) compared to nonflat paints. The ratio of pigments and fillers to the total solids content is referred to as the pigment volume concentration or "PVC" ratio. Flat paints tend to have PVC ratios of about 30 compared to nonflat paints, with PVC ratios of 5 to 10 (Seymour of Sycamore, 11/15/93). Paints with higher PVC ratios tend to have a "flatter," less glossy, appearance compared to paints with lower PVC ratios.

The total sales-weighted average solids content for flat aerosol paints was estimated to be 21 percent, based on the ARB Aerosol Paint Survey. The sales-weighted average solids level was about the same for both solvent-borne and water-borne products, and was higher than the 18 percent sales-weighted average solids level for nonflat aerosol paints.

The solvents and propellants in aerosol paints together constitute the total VOC content of the product. According to the ARB Aerosol Paint Survey, flat aerosol paints contain a sales-weighted average VOC content of 76 percent, with a sales-weighted average solvent content of 51 percent, and a sales-weighted average propellant content of 25 percent. The total VOC content in flat aerosol paints ranged from 42 percent to 95 percent, with water-borne products and products containing exempt solvents such as methylene chloride and 1,1,1-trichloroethane being the lowest VOC products. The survey also showed that the sales-weighted average VOC content was 77 percent for solvent-borne products and 53 percent for water-borne products.

The solvents and propellants used in flat aerosol paints are generally similar to those used in other aerosol paints. Typical solvents in solvent-borne products include petroleum distillates, aromatics such as zylene and toluene, alcohols, and ketones. Typical propellants used include blends of isobutane, propane, and normal butane. Water-borne products, which constitute about 5 percent of the flat aerosol paint market in California, typically contain dimethyl ether propellant, water, alcohols, and other water-soluble solvents (ARB Aerosol Paint Survey). Few flat paint products contain methylene chloride or 1,1,1-trichloroethane. According to the ARB Aerosol Paint Survey, 31,000 pounds of these exempt compounds were emitted from flat aerosol paints.

Proposed VOC Standard:

The VOC limit proposed for flat aerosol coatings is 60 percent by weight. This proposed standard is consistent with the standard for flat paints in the Bay Area Air Quality Management District's (BAAQMD) Rule 8-49, which has been in effect since Rule 8-49 was amended in August of 1991.

We are proposing a 60 percent VOC limit because technology is currently available to manufacture commercially viable products at this level. In addition, it is important to

achieve the maximum feasible emission reduction from this paint category because it is the second largest in terms of sales and VOC emissions. At the proposed 60 percent VOC level, 15 complying flat coatings are being marketed by the following 10 companies without the use of methylene chloride or 1,1,1-trichloroethane: Aervoe-Pacific Company, DAP Incorporated, Drummond American Corporation, Imperial Paint Company, K-G Packaging, K-Mart, Rudd Company Incorporated, Rust-oleum Corporation, Sprayon Products, and Zynolyte Products Company. These companies market both solvent-borne, and water-borne formulations that meet the proposed standard. According to the ARB Aerosol Paint Survey, the 15 products at or below the proposed 60 percent VOC limit represent approximately 15 percent of the flat aerosol paint market (in pounds).

As stated previously, flat aerosol paint products are required to meet a 60 percent VOC level in the Bay Area Air Quality Management District. However, 12 of the 15 complying products identified in the ARB Aerosol Paint Survey were not identified as products sold exclusively in the BAAQMD, an indication that the manufacturers of these products believe that the complying products are able to compete with higher VOC products sold outside the BAAQMD.

Aerosol paint manufacturers have reported to the ARB that they currently have successful flat aerosol paints at or below the 60 percent VOC level. One manufacturer reported that they have developed a water based acrylic aerosol coating "... which not only has VOC levels well below the most stringent VOC limits (BAAQMD, Regulation 8, Rule 49) but also has performance characteristic [sic] that rival current solvent-borne aerosol coatings" (DAP). Another manufacturer also stated that the VOC limits of 60 percent for flat and 65 percent for nonflat coatings were acceptable for their high-solids products (Rust-oleum).

Manufacturers which do not currently manufacture flat paints at or below 60 percent VOC, have several reformulation options as described in the Chapter V, "Technical Basis for Proposed Regulations." One option is to use higher solids solvent-borne formulations with lower viscosity resins, such as alkyd resins which have not been heavily modified (Sprayon; Plasti-kote). Another option is to use water-borne formulations such as water-soluble alkyd systems, acrylic lacquer dispersions, or combinations of these technologies (Seymour of Sycamore, 6/10/94; Strobach).

**REFERENCES**

Air Resources Board, Aerosol Paint Survey, February 25, 1993.

Battelle Memorial Institute, Survey of Emissions from Solvent Use-Volume I: Aerosol Paints, Prepared for California Air Resources Board, Contract A132-085, September 16, 1994.

DAP, Inc., Letter to ARB staff, August 23, 1993.

Plasti-kote, Telephone conversation with ARB staff, October 26, 1993.

Rust-oleum Corporation, Telephone conversation with ARB staff, August 4, 1993.

Seymour of Sycamore, Telephone conversation with ARB staff, November 15, 1993.

Seymour of Sycamore, Telephone conversation with ARB staff, June 10, 1994.

Sprayon Products, Telephone conversation with ARB staff, October 25, 1993.

Strobach, Donald R., "Water-Based Aerosols Formulated with Dimethyl Ether Propellant," American Paint & Coatings Journal, July 9, 1990, p. 44.

## C. FLUORESCENT COATINGS

Proposed VOC Standard (1996): 75.0%

Product Description:

Fluorescent coatings are highly visible coatings which convert absorbed incident light energy into emitted light of a different hue. Ambient light contains electromagnetic radiation, including the short wavelength, high energy, nonvisible light known as ultraviolet (UV) radiation, the longer wavelength visible light, and the even longer wavelength, lower energy, nonvisible infrared radiation. The visible region contains the spectrum of colors ranging through violet, indigo, blue, green, yellow, orange and red. The dyes in fluorescent coatings absorb light in the UV and visible regions and emit it in a narrow range of longer wavelengths in the visible region. This light, when added to the normally reflected light, gives articles their color and makes them appear to glow in the daylight (Rolinson).

As described in more detail below under "Product Use," fluorescent coatings are used for decorative purposes, as marking paints for construction and surveying, for safety uses, and in "upside-down" ground marking or striping paints. However, it should be noted that upside-down marking paints, whether fluorescent or not, fall under the ground traffic marking paint coating category rather than the fluorescent coating category, and as such are subject to the proposed 66 percent VOC limit (see discussion on ground traffic paints for more information on ground traffic marking paints).

As shown in Table IV-3, fluorescent aerosol paint products in California account for sales of approximately 260,000 pounds or about 1.5 percent of the total aerosol paint sales in

1992. These products also produced estimated VOC emissions of 182,000 pounds, or approximately 1.3 percent of the total reported aerosol paint emissions for 1992.

**Table IV-3**
**Fluorescent Aerosol Spray Paint**
**Summary of Estimated 1992 Emissions and Sales**

| Number of Products | Total Category Sales (Lbs/Yr) | Market Share (%) | Emissions (Lbs/Yr) | Emissions (% of total) |
|---|---|---|---|---|
| 19 | 260,000 | 1.5% | 182,000 | 1.3% |

Source: Battelle Report, 1994.

Product Use:

As detailed below, fluorescent coatings are used as decorative coatings, as high visibility coatings for use in industrial settings, and as marking paints in construction and surveying. They are used on a variety of substrates such as concrete, earth, wood, metal, paper, and cloth. Aerosol fluorescent paints sold in the standard upright cans are applied in the same way as other aerosol paints as described in the section for flat paints. The upside-down ground marking paints are applied differently, as described in the product use section for ground traffic marking paints. For maximum brightness, it is generally recommended that a base coat of either flat or gloss white be applied first to the surface being coated.

Decorative uses of fluorescent coatings include customizing bicycles, skateboards, cars, sports equipment, clothing, water skis, wagons, toys, and helmets. They are also used on posters, signs, displays, stencils, ornaments, and craft projects.

Fluorescent coatings are also cited as being important for safety in that they are used to alert people to potential dangers. However, the literature indicates that the Occupational Safety and Health Administration (OSHA) specified colors are not fluorescent (Krylon, 1992). Fluorescent coatings for industrial use are recommended for steel bars, machinery, and safety, emergency, and production equipment (Sprayon, 1991).

Fluorescent coatings are also used by surveyors, public utility workers, and contractors, primarily as upside-down marking paints, for marking during construction and to identify underground hazards.

Fluorescent paints are not used as protective coatings. They are essentially sacrificial in nature (Major Paint, 10/19/93). The intense color of the coating is relatively short lived, as the pigments show poor durability in paint and fade quickly. This instability limits their use to short-term, mostly interior applications (Rolinson). However, some product literature

indicates that a clear topcoat will improve durability and slow the fading process (Sprayon, 1990; Sprayon, 1991).

Product Marketing:

Fluorescent coatings are sold in a variety of retail outlets, including automotive supply stores, discount stores, paint stores, home improvement centers, hardware stores, arts and crafts stores, department stores and by catalogue. Fluorescent coatings are usually marketed by emphasizing the bright, vivid, exciting, attention-getting colors, for decorative, identification, and safety applications.

The following 14 companies have been identified in the ARB's Aerosol Paint Survey as manufacturing or marketing fluorescent aerosol spray paint products:

| | |
|---|---|
| Ace Products | Rust-oleum Corporation |
| Aervoe-Pacific Company Inc.* | Seymour of Sycamore |
| DAP Inc.* | Sprayon Industrial |
| K-G Packaging/Div. of CCL | State Chemical Manufacturing Co. |
| Krylon/Dupli-color Products Co. | Tru-Test Manufacturing |
| Plasti-kote Company, Inc.* | United Coatings Inc. |
| Rudd Company* | **Zynolyte Products Co./Major Paints** |

Of these manufacturers, one is based in California. This company is highlighted in **bold** text. Four companies identified themselves as small businesses in the ARB Aerosol Paint Survey. These companies are denoted with an asterisk (*).

According to the 1992 ARB Aerosol Paint Survey, 22 percent of fluorescent aerosols were sold for household use, 18 percent were sold for industrial use, and 60 percent were sold for both uses. For this category, there were no aerosol coatings marketed specifically for use in the Bay Area Air Quality Management District (BAAQMD).

Product Formulation:

Fluorescent coatings are low gloss and the resins in solvent-borne coatings are usually acrylic lacquers (Major Paint, 10/19/93) although some are composed of alkyd lacquers (Major Paint, 9/15/93). Resins used in water-borne coatings vary but most common are the water reducible alkyds (Day-Glo Color Corp., 11/3/93). Other product literature shows water-borne products with acrylic polymer resins (K-G Packaging, 9/90).

The dyes used in fluorescent coatings contribute the fluorescent quality of the coating, while the resin (acrylic or alkyd) acts as binder and helps contribute to the color stability of the product. Fluorescent pigments used in aerosol paints are made by incorporating fluorescent dyes into an insoluble matrix, which is then ground to the desired particle size (Federation of Societies for Coating Technology).

The sales-weighted average solids for fluorescent coatings is estimated to be 20 percent, with an average of 16 percent for water-borne formulations, and 21 percent for a solvent-borne formulations. The difference in sales-weighted averages between the solvent-borne and water-borne fluorescents may not reflect formulating differences between solvent-borne and water-borne coatings, but may instead reflect the differences in the types of coatings that are formulated as water-borne and solvent-borne coatings. An industry representative notes that water-borne coatings may be more commonly used for shorter-lived outdoor and upside-down marking paint applications where the pigment density can be lower (Day-Glo Color Corp., 5/26/94).

The organic solvents used in fluorescent coatings include aliphatic and aromatic hydrocarbons such as toluene, hexane, and heptane, and also ketones and acetates for solvent-borne coatings, and glycol ethers or alcohols, mineral spirits, and toluene for water-borne coatings (Day-Glo Color Corp., 11/3/93; Sprayon, 1994). Propellants include propane, propane/isobutane mixtures, and dimethyl ether. Approximately 7,600 pounds of exempt solvents were emitted from the use of fluorescent coatings, according to the ARB Aerosol Paint Survey. We are also able to determine from the survey that the sales-weighted average VOC content of fluorescent coatings is 70 percent, with a range from 54 to 84 percent VOC. The sales-weighted average propellant concentration is 30 percent. The sales-weighted average VOC concentration for water-borne products is 54 percent, while the sales weighted average VOC concentration for solvent-borne products is 75 percent.

Proposed VOC Standard:

The proposed VOC standard for fluorescent coatings is 75 percent by weight. This is higher than the 65 percent VOC standard specified in the Bay Area Air Quality Management District's aerosol paint rule. A higher standard is proposed because the industry has demonstrated that, using the materials and formulations presently available, the proposed 65 percent limit for flat coatings would limit manufacturers to formulations which may fade more quickly. According to the ARB Aerosol Paint Survey, there are some fluorescent coatings available that have less than 65 percent VOC content. However, manufacturers have told us that these products do not adequately satisfy all the end uses for fluorescent coatings. This is in part due to the fact that the formulations available that are below 65 percent VOC generally use dimethyl ether as the propellant. While fluorescent coatings have been formulated in this way for several years, these products are generally less stable, especially in applications subject to extended exposure to UV light. Water-borne fluorescent coatings and solvent-borne fluorescent with dimethyl ether as propellant are shorter-lived both in the can and after spray-out than traditional solvent-borne fluorescent using hydrocarbon propellants (Day-Glo Color Corp., 7/21/93; Day-Glo Color Corp., 11/3/93; Major Paints, 6/30/93; Major Paints, 8/9/93; Major Paints, 9/15/93). However, it should be noted that for many uses, such as temporary marking on soil or grass, where the coating would not be expected to remain long, these products have been shown to be acceptable.

The proposed 75 percent VOC limit will accommodate the manufacture of either water-borne or high-solids solvent-borne products, depending on the specific requirements of the coating. Seven of the 19 products available in 1992 were formulated with VOC concentrations at or below 75 percent VOC without the use of 1,1,1-trichloroethane or methylene chloride. These coatings are being marketed by the following companies: Aervo-Pacific, K-G Packaging, Plasti-kote, Rudd Company, Seymour of Sycamore, Sprayon, and Tru-Test Manufacturing. These products contribute 42 percent of the fluorescent aerosol paint market by sales (again, excluding products containing methylene chloride or 1,1,1-trichloroethane), and have an sales-weighted average VOC content of 64 percent. In fact, the sales weighted average for all solvent-borne fluorescent is 75 percent VOC, equivalent to the proposed 75 percent standard. The sales-weighted average VOC concentration for all fluorescent coatings (including water-borne coatings) is 70 percent, well below the proposed limit of 75 percent for this category. While the proposed limit may pose a challenge to some manufacturers, the proposed limit is clearly technologically feasible and allows the manufacture of a commercially viable product.

Requests have been made for an 80 percent VOC limit (Aervoe-Pacific, 6/29/93) and an 84 percent VOC limit (Sherwin-Williams, 8/11/93). However, the maximum VOC concentration of any product reported in this category is 84 percent. Therefore, an 84 percent VOC limit would achieve no emissions reductions in this category, which is the 10th largest in terms of both sales and emissions. Additionally, only 3 of the 19 coatings reported have VOC concentrations of greater than 80 percent, making an 80 percent limit similarly ineffectual. Notably, there were no fluorescent coatings marketed exclusively in the Bay Area, indicating that manufacturers believe their low-VOC products can effectively compete with the high-VOC products.

At the 75 percent VOC limit a high-solids solvent-borne coating using aliphatic hydrocarbon propellants can be formulated by increasing the solids content. This may be accomplished to a large extent by increasing the amount of dyes and resins in the product, although addition of extender pigment to increase solids is another option for manufacturers (Day-Glo Color, 10/28/93). There presently exist 80 percent VOC formulations that use no extender pigments (Day-Glo Color, 5/26/94). While formulating a solvent-borne 75 percent VOC product may offer a challenge to some manufacturers, it has been observed by industry that the 75 percent standard will allow them to formulate a product that will not be visually different from an 80 percent VOC product, nor will there necessarily be observable differences in workability or lightfastness between the two formulations (Day-Glo Color Corp., 9/16/93; Day-Glo Color, 5/31/94). We believe that the 75 percent limit is a reasonable compromise between the stated industry preference and the Bay Area limit, will achieve emission reductions, and will still allow the formulations that industry contends must be available.

**REFERENCES**

Aervoe-Pacific Company, Inc., Letter to ARB staff, June 29, 1993.

Air Resources Board Aerosol Paint Survey, February 25, 1993.

Battelle Memorial Institute, Survey of Emissions from Solvent Use-Volume I: Aerosol Paints, Prepared for California Air Resources Board, Contract A132-085, September 16, 1994.

Day-Glo Color Corp., Letter to ARB staff, July 21, 1993.

Day-Glo Color Corp., Telephone conversation with ARB staff, September 16, 1993.

Day-Glo Color Corp., Telephone conversation with ARB staff, October 28, 1993.

Day-Glo Color Corp., Telephone conversation with ARB staff, November 3, 1993.

Day-Glo Color Corp., Telephone conversation with ARB staff, May 26, 1994.

Day-Glo Color Corp., Telephone conversation with ARB staff, May 31, 1994.

Federation of Societies for Coatings Technology, Paint/Coatings Dictionary, Federation of Societies for Coatings Technology, Philadelphia, Pennsylvania, 1978, p. 189.

Krylon, Product literature, "Krylon," "K7203," January 1992.

K-G Packaging, Product literature, "Technical Service Bulletin AF650 Series," August, 1990.

Major Paint Co., Letter to ARB staff, June 30, 1993.

Major Paint Co., Letter to ARB staff, August 9, 1993.

Major Paint Co., Letter to ARB staff, September 15, 1993.

Major Paint Co., Telephone conversation with ARB staff, October 19, 1993.

Rolinson, J. F., "Pigments for Paint," R. Lambourne, Editor, Paint and Surface Coatings Theory and Practice, John Wiley and Sons, New York, 1987, pp. 111-193.

Sherwin-Williams, Letter to ARB staff, August 11, 1993.

Sprayon Company, Product label, "Industrial Fluorescent Paint," 1990.

Sprayon Company, Product literature, "Over Three Hundred Ways to Match Your Aerosol Needs," 1991.

Sprayon Company, Material Safety Data Sheet, "High Heat and Fluorescent Paints," January, 1994.

## D. METALLIC COATINGS

Proposed VOC Standard (1996): 80.0%

Product Description:

Metallic coatings are defined as topcoats which contain at least 0.5 percent elemental metallic pigment by weight and are labeled as "metallic," or with the name of a specific metallic finish such as "gold," "silver," or "bronze." Metallic coatings are required to contain 0.5 percent elemental metallic pigment because most metallic coatings have a metallic pigment content above this level. Below this level, coatings may have appearances more like a typical nonflat coating.

There are two forms of metallic coatings. One form, the "leafing" metallics, contains a metal as the sole pigment in the coating. Leafing refers to the distribution of the metallic pigment within the coating. In leafing pigments, the metallic pigment is carried to the surface of the paint film during drying and gives the appearance of an almost continuous film of metal (Rolinson). These coatings are designed to create the impression that the object coated is composed of gold, silver, brass, copper or aluminum.

The second form of metallic coating is known as "non-leafing." In non-leafing paints the metallic pigments do not form a continuous metallic layer on the surface of the coating. Rather, they are distributed within the paint film and "produce a 'polychrome' [being of many or various colors] effect, when used in conjunction with semi-transparent colored pigments (Rolinson)." These coatings have small amounts of metallic pigment, generally less than the 0.5 percent by weight specified for the metallic category. The metallic pigment contained within the transparent color causes the coating to sparkle. Generally, these colored metallics are formulated to exactly match automobile finishes (Plasti-kote, 10/26/93; Rudd, 10/21/93) and therefore fall into the exact match category with an 88 percent VOC standard. However, there are some non-leafing metallics that are not formulated as exact match coatings. Most of these coatings have a metal content of greater than 0.5 percent, and are therefore categorized as metallics.

Metallic coatings are a significant segment of the aerosol paint market. Metallic coatings are the fifth largest category in terms of sales with 85 products resulting in an estimated 800,000 pounds sold. As shown in Table IV-4, this comprises 4.5 percent of the total aerosol paint market in California. The third largest category in terms of emissions, metallic aerosol paints resulted in 664,000 pounds of VOC emissions or approximately 4.9 percent of the total aerosol paint emissions in California in 1992 (Battelle, 1994).

**Table IV-4**
**Metallic Coatings**
**Summary of Estimated 1992 Emissions and Sales**

| Number of Products | Total Category Sales (Lbs/Yr) | Market Share (%) | Emissions (Lbs/Yr) | Emissions (% of total) |
|---|---|---|---|---|
| 85 | 800,000 | 4.5% | 664,000 | 4.9% |

Source: Battelle Report, 1994.

Product Use:

Metallic coatings may be used to give the look of various metals to picture frames, lamps, ornaments, statuary, plasterware, holiday decorations, arts and crafts, furniture, accessories, and automotive parts such as wheels. Substrates may include metal, wood, plaster, masonry, and drywall. The application of these products is essentially as described for the flat aerosol paints. The aluminum and stainless steel metallic finishes are used to refinish aluminum and stainless steel parts and restore them to their original appearance. Metallic paints can also provide additional functional benefits. For example, aluminum pigmented paints may be used for exterior applications such as on gas cylinders to help keep them cool when exposed to sunlight (Seymour of Sycamore, 10/19/93).

Product Marketing:

Metallic pigmented coatings are sold in automotive supply stores, discount stores, hardware stores, home supply stores, paint stores, department stores, hobby and craft stores, and by catalogue. They are generally marketed for their bright finish and often for their tarnish and heat resistance. The following 17 companies have been identified in the ARB Aerosol Paint Survey as manufacturing or marketing metallic spray paint products:

Ace Products
Coverite/Div of US Hobby*
DAP Inc.*
Imperial Paint Company*
Johnstone Supply
K-Mart Company
Krylon/Dupli-Color
Plasti-kote Company*
PPG Industries Inc.
Rudd Company, Inc.*
Rust-oleum Corporation
Sherwin-Williams
Sprayon Industrial
State Chemical Company
Tru-Test Manufacturing
United Coatings, Inc.
**Zynolyte Products/Major Paints**

Of these manufacturers, 1 is based in California. This company is highlighted in **bold** text. Five companies identified themselves as small businesses in the ARB Aerosol Paint Survey. These companies are denoted with an asterisk (*).

According to the ARB Aerosol Paint Survey, 53 percent of metallic coatings were sold for household use, with 6 percent sold for industrial use, and 41 percent sold for either use. Metallic coatings marketed for sale exclusively in the Bay Area Air Quality Management District totalled approximately 3 percent of the sales for this category.

Product Formulation:

Generally, metallic coating formulations do not differ dramatically from other types of aerosol paints. They use many of the same resins, solvents and propellants. However, metallic pigments, rather than the standard colored pigments, are used in the formulation to achieve the look of metal. To achieve the leafing effect, the pigments are coated with stearic acid, which serves as a lubricant to aid in bringing the metallic flake to the surface of the coating (Rolinson). Copper metallics are formulated using 100 percent copper, while bronze, brass and gold metallics are prepared by varying the ratios of copper and zinc in the metallic alloy pigment (Seymour of Sycamore, 10/19/93; Plasti-kote, 10/26/93). As copper tarnishes upon weathering, copper metallics and those metallics made with copper alloys pigments are not durable and are used primarily for interior applications. However, aluminum metallics have excellent durability and can be used for interior and exterior applications (Seymour of Sycamore, 10/19/93).

According to the ARB Aerosol Paint Survey, the sales-weighted average solids content in metallic formulations was about 16 percent, with sales-weighted average VOC solvent and propellant contents of 57 percent and 26 percent, respectively. This is fairly typical for the aerosol paint topcoat categories which do not contain any water-borne coatings, such as engine enamels, high temperature coatings, and hobby/model/craft lacquers. According to the 1992 ARB Aerosol Paint Survey, the maximum reported VOC content for products in the metallic aerosol coatings category was 95 percent, the minimum content was 46, and the sales-weighted average VOC content was 83 percent. However, some manufacturers miscategorized zinc-containing primers as metallic coatings in the ARB Aerosol Paint Survey. These products do not qualify as "metallic coatings" as defined in the proposed regulation, even if they meet the minimum required metallic content, because they are not "topcoats." When zinc-containing primers that should not have been categorized as metallic coatings are excluded from the calculations, the sales-weighted average VOC content is 87 percent, with the minimum VOC content being 68. Again, this is excluding any exempt-containing formulations. There were no water-borne or 1,1,1-trichloroethane-containing formulations reported. However, approximately 6,700 pounds of methylene chloride was emitted from the use of metallic coatings.

Solvents commonly used in the leafing metallic formulations include aromatic hydrocarbons such as toluene and xylene, ketones, and acetone. The propellant used most often is a mixture of propane and isobutane. Acrylic (Seymour of Sycamore, 10/19/93), polyurethane and nitrocellulose (Sprayon, Product Information literature) resins are used. Alkyd resins, with their high acid value, are not used for leafing metallics because resins with a low acid value are required for optimal leafing (Rolinson; Seymour of Sycamore, 10/19/93).

Elemental metal content for the leafing metallics is about one percent by weight or greater, with maximum amounts being about 9 percent by weight (Seymour of Sycamore, 9/16/93; Johnstone Supply, 10/19/93, Rust-oleum, 10/21/93). The composition of the non-leafing colored metallics will be presented in more detail in the automotive exact-match discussion.

Proposed VOC Standard:

The VOC limit proposed for metallic coatings is 80 percent by weight, consistent with the VOC limit in the Bay Area Air Quality Management District. While metallics are generally high gloss coatings, the limit for metallic coatings has been set at a value greater than the proposed 65 percent standard for non-flat paints primarily because of the requirement that these metallic pigments leaf, or rise to the surface of the coating and align horizontally. The higher VOC level is necessary to assure that coating has the low viscosity required at the moment the paint comes in contact with the substrate to, in concert with the stearic acid coating on the pigment, allow the desired leafing to occur (Rudd, 10/21/93).

Survey data and industry sources show that complying metallic coatings may be formulated by increasing the pigment loading and the overall solids content (United Coatings, 6/7/94). These techniques are discussed in more detail in Chapter V. In terms of innovations yet to come, it is possible that water-borne metallic formulations may be available in the future (Zynolyte, 6/7/94).

At an 80 percent VOC standard, seven complying coatings were marketed in 1992 by the following seven companies (excluding miscategorized products and products formulated with exempt solvents such as methylene chloride and 1,1,1-trichloroethane): Plasti-kote, Rudd Company, Rust-oleum, Sprayon, Tru-Test Manufacturing, United Coatings, Inc., and Zynolyte. According to the ARB's Aerosol Paint Survey, sales of these seven products accounted for 9 percent of the total metallic coatings market. Although this is a fairly small proportion of the category and might indicate that an 80 percent standard would be difficult to reach, the ARB Aerosol Paint Survey shows that the sales-weighted average VOC content of the entire category, again, excluding exempt-containing products and miscategorized products, is about 86 percent. This indicates that most of the coatings in this category are already near the 80 percent VOC standard and that a major reformulation effort may not be necessary for the majority of the metallic coatings.

As mentioned previously, metallic coatings are required to meet an 80 percent VOC level in the Bay Area Air Quality Management District. According to ARB's Aerosol Paint Survey, only 20 percent of the coatings that are at or below the 80 percent VOC level are for sale solely in the Bay Area (excluding miscategorized coatings and products meeting the standard through the use of exempt solvents as described previously). The low percentage of complying coatings "for Bay Area sale only" indicates that manufacturers believe that their low-VOC products can effectively compete with the higher VOC products.

Some industry spokespeople have lobbied for an 84 percent VOC standard (Sherwin-Williams, 7/7/93). However, there has also been industry support for an 80 percent standard (Seymour of Sycamore, 9/27/93). In addition, metallic coatings have been required to meet an 80 percent VOC limit in the Bay Area Air Quality Management District (BAAQMD) since August, 1991. While complying with this limit may pose a challenge to some manufacturers, the sales-weighted average VOC content of 86 percent, comments from the manufactures, and the proportion of the market that already complies with this proposed standard, all indicate that the proposed 80 percent standard is both technically and commercially feasible. Additionally, this is an important category in which to obtain emissions reduction, ranking third in overall emissions and fifth in overall sales.

**REFERENCES**


Air Resources Board Aerosol Paint Survey, February 25, 1993.

Battelle Memorial Institute, Survey of Emissions from Solvent Use-Volume I: Aerosol Paints, Prepared for California Air Resources Board, Contract A132-085, September 16, 1994.

Johnstone Supply, Telephone conversation with ARB staff, October 19, 1993.

Rolinson, J. F., "Pigments for Paint," R. Lambourne, Editor, Paint and Surface Coatings Theory and Practice, John Wiley and Sons, New York, 1987, pp. 111-193.

Plasti-kote Company, Inc., Telephone conversation with ARB staff, October 26, 1993.

Rudd Company, Telephone conversation with ARB staff, October 21, 1993.

Rust-oleum Corporation, Letter to ARB staff, October 21, 1993.

Seymour of Sycamore, Telephone conversation with ARB staff, October 19, 1993.

Seymour of Sycamore, Letter to ARB staff, September 27, 1993.

Sherwin-Williams, Letter to ARB staff, July 7, 1993.

United Coatings, Telephone conversation with ARB staff, June 7, 1994.

Zynolyte Products Co., Telephone conversation with ARB staff, June 7, 1994.

## E. NONFLAT PAINT PRODUCTS

Proposed VOC Standard (1996): 65.0%

Product Description:

Nonflat (or gloss) aerosol paint products are aerosol paints with a specular gloss level greater than 15 on an 85° meter, or greater than 5 on a 60° meter (see the section on flat paint products for a description of gloss measurements). Aerosol paints labeled as "gloss" paints do not qualify as nonflat unless the gloss criteria listed above are met. Nonflat aerosol paint products are primarily general use aerosol paints that do not fall under one of the other coating categories. However, special-use nonflat paints that have the gloss level specified above, and do not fall under one of the other coating categories in the regulation, would also fall under the nonflat paint category.

The nonflat aerosol paint category is by far the largest category of aerosol paints with respect to sales and emissions. As shown in the table below, nonflat aerosol paints account for about 9.6 million pounds of sales in California in 1992. This accounts for approximately 54.7 percent of the total aerosol paint market and about 55 percent of the VOC emissions, at about 7.4 million pounds in 1992.

**Table IV-5**
**Nonflat Paints**
**Summary of Estimated 1992 Emissions and Sales**

| Number of Products | Total Category Sales (Lbs/Yr) | Market Share (%) | Emissions (Lbs/Yr) | Emissions (% of total) |
|---|---|---|---|---|
| 194 | 9,600,000 | 54.7% | 7,400,000 | 54.8% |

Source: Battelle Report, 1994.

Product Use:

Nonflat aerosol paints are primarily general-use products employed for a wide variety of purposes where a glossy finish is desired. Some typical uses include protecting objects from rust and corrosion, "touching-up" finishes, and coating small objects or objects that would be hard to coat with a brush, such as wicker. Nonflat aerosol paints are also used when a smooth finish without brush strokes is desired. Typical objects that consumers paint with nonflat products include: children's toys such as bicycles and wagons, crafts, art work, lawn furniture, ironwork, picture frames, mailboxes, and general outdoor equipment, such as tools and lawnmowers. Industrial uses include the coating and touch-up of pipes, ductwork, motors, tools, machinery, and general industrial equipment.

Nonflat aerosol paints are applied in a manner similar to other aerosol paint products,

as discussed in the "Product Use" section for flat aerosol paints.

Product Marketing:

Nonflat aerosol paints are sold wherever aerosol paints are sold, including paint stores, hardware stores, home improvement centers, hobby/craft stores, and discount stores. Nonflat paints, like flat aerosol paints, are marketed in many different ways. Some are sold as general, all-purpose products, while others emphasis specific qualities such as rust protection, unique decorator colors, environmentally beneficial water-borne formulas, specific resin types, such as epoxies or polyurethanes, or quick dry times. In addition, some products may be marketed as "premium" high-quality products, while others emphasize low cost.

The following 29 companies were identified in ARB's Aerosol Paint Survey as companies that manufacture or market nonflat aerosol paints:

Ace Product*
Aerosol Maintenance Products*
Aervoe-Pacific*
Chase Products Company*
Coverite/Div. US Hobby*
DAP Incorporated*
Drummond American Corp.
**Dunn-Edwards Corp.**
**Flecto Company Inc.***
Imperial Paint*
Johnstone Supply
K-G Packaging
K-Mart
Klinger Paint Company*
**Kop-Coat Inc.***
Krylon/Duplicolor
**Life Paint Company***
Plasti-kote Company Inc.*
PPG Industries Inc.
Rudd Company Inc.*
Rust-oleum Corporation
Seymour of Sycamore
Sherwin-Williams
Sprayon Industrial
Taylor Made Products*
Tru-Test Manufacturing Company
United Coatings Inc.
Valspar Corporation
**Zynolyte Products Company**

Of these manufacturers, 5 are California based companies. These companies are highlighted in **bold** text. Fourteen companies identified themselves as small businesses in the ARB Aerosol Paint Survey. These companies are denoted with an asterisk (*).

According to the ARB Aerosol Paint Survey, an estimated 45 percent of nonflat aerosol paint products were sold for household use, with 5 percent sold only for industrial use, and 51 percent sold for either use. Approximately 5 percent of nonflat aerosol paints were sold for use only in the Bay Area Air Quality Management District (BAAQMD) in order to comply with the BAAQMD's aerosol paint rule (Rule 8-49).

Product Formulation:

Nonflat aerosol paint formulations are very similar to the formulations of flat aerosol

paint products, as discussed previously. However, nonflat paints have a higher concentration of resin relative to the total paint solids content, with PVC ratios of about 5 to 10, as compared to about 30 for flat aerosol paints (see discussion on flat paint products). This higher concentration of resin gives nonflat paints higher gloss than flat paint products. The higher concentration of resin may also account for the somewhat higher VOC levels and lower total solids levels relative to flat aerosol paints, since resins contribute greater viscosity to paint formulations than other paint solids. According to the ARB Aerosol Paint Survey, the total sales-weighted average solids content (resins, pigments, and fillers) in nonflat aerosol paints was estimated to be approximately 18 percent, with solvent-borne products at 18 percent, and water-borne products at 19 percent (less than the sales-weighted average solids level of 21 percent for flat paint products).

The sales-weighted average VOC content of nonflat aerosol paints sold in California was estimated to be 77 percent in 1992, with a range from 44 percent to 95 percent, based on the ARB Aerosol Paint Survey. Solvent-borne products were much higher in VOC, with a sales-weighted average VOC content of 79 percent, compared to 52 for water-borne aerosol paints.

Proposed VOC Standard:

The VOC limit proposed for nonflat aerosol coatings is 65 percent by weight. This proposed standard is consistent with the standard for flat paints in the BAAQMD Rule 8-49, which has been in effect since Rule 8-49 was amended in August of 1991.

We are proposing a 65 percent VOC limit because our review of the literature, discussions with industry, and the data from the ARB Aerosol Paint Survey demonstrate that technology is currently available to manufacture commercially viable products at this level. In addition, the nonflat aerosol paint category is by far the largest aerosol paint category, representing over half of the emissions from the entire aerosol paint market. Therefore, it is important to achieve the maximum feasible emission reduction from this paint category.

At the proposed 65 percent VOC limit, 44 complying nonflat coatings that meet the proposed standard are being marketed without the use of methylene chloride or 1,1,1-trichloroethane. These products are marketed by the following 14 companies: Aervoe-Pacific Company, Chase Products Company, DAP Incorporated, Drummond American Corporation, Dunn-Edwards Corporation, Flecto Paint Company, Imperial Paint Company, K-G Packaging, K-Mart, Plasti-kote Company Incorporated, Rust-oleum Corporation, Seymour of Sycamore, Sprayon Products, and Zynolyte Products Company. These companies market both solvent-borne, and water-borne formulations. According to the ARB's Aerosol Paint Survey, the 44 products at or below the 65 percent VOC limit represent an estimated 19 percent of the market (in pounds).

As mentioned previously, nonflat aerosol paints are required to meet a 65 percent VOC level in the Bay Area Air Quality Management District (BAAQMD). However, 33 of

the 44 complying products identified in the ARB Aerosol Paint Survey were not identified as products sold exclusively in the BAAQMD, indicating that most of the complying products are able to compete with higher VOC products sold outside the BAAQMD.

Several members of the industry have expressed their support for the proposed 65 percent VOC level, or have reported that they are able to produce products at the stated VOC level. Two of these manufacturers were mentioned in the discussion of flat aerosol paints (DAP; Rust-oleum). In addition, another manufacturer reported that their water-borne nonflat aerosol paints (which meet the proposed 65% VOC limit) are comparable overall to typical solvent-borne general-use aerosol paints (K-G Packaging). Finally, a licensing firm has received patents for a 40 percent VOC nonflat aerosol paint with properties that are reportedly "comparable to either the solvent-based or the water reducible alkyd formulations (Scotti)."

Manufacturers which do not already manufacture nonflat paints at or below 65 percent VOC have basically the same reformulation options that are discussed for flat aerosol paints. As discussion in detail in Chapter V, these options include increasing the solids content of the formulation, reformulating to a water-borne formulation, or using a non-VOC propellant such as HFC-152a.

**REFERENCES**

Air Resources Board Aerosol Paint Survey, February 25, 1993.

Battelle Memorial Institute, Survey of Emissions from Solvent Use-Volume I: Aerosol Paints, Prepared for California Air Resources Board, Contract A132-085, September 16, 1994.

DAP, Inc., Letter to ARB staff, August 23, 1993.

K-G Packaging, Telephone conversation with ARB staff, May 27, 1994.

Rust-oleum Corporation, Telephone conversation with ARB staff, August 4, 1993.

Scotti, Dr. Frank, and Edward Page, "Latex paint formulations can achieve VOC reductions," Spray Technology and Marketing, September, 1992, pp 38-39.

## F. PRIMER COATINGS

Proposed VOC Standard (1996): 60.0%

Product Description:

A primer is a coating formulated to be applied to a surface to provide a bond between that surface and subsequent coats. As such, primers contribute to the overall effectiveness of

an entire coating system. Primers reportedly bond the substrate to subsequent coatings by providing a rough, slightly porous surface which adheres to both slick surfaces and glossy topcoats (Seymour of Sycamore, 6/10/94). Under the proposed aerosol paint regulation, an aerosol paint must also be labeled as a "primer" to fall under this category.

Due to differences in formulation and function, auto body primers are specifically excluded from the general primer category. General primers reportedly cannot be topcoated with automotive topcoats because the solvents in these topcoats will cause "lifting" of general purpose primers (Rust-oleum Corporation, 10/21/93). The auto body primer category is more fully described in the discussion of "Auto Body Primers."

Primers can fulfill a variety of functions. Depending on the type of product, primers must be able to protect against deterioration due to flaking, peeling, blistering, corrosion, rust, chemicals, and other conditions (DAP, Inc., Product Label, Derusto Rust Preventative Primer; X-I-M Products, Inc., Product Label, 400-W White Primer/Sealer/Bonder, Product Description Sheet, 400-W White Primer/Sealer/Bonder; Seymour of Sycamore, Inc., Product Information Sheet, "High-Tech" Industrial "MRO" Primers, 2/92). Primers can also help fill and level irregular substrates so that they are more suitably prepared to provide good adhesion and build for subsequent coats such as basecoats or topcoats (Plasti-kote Company, Inc., Product Label, Super Primer, Product Label, Anti-Rust Primer, Product Label, Ultra Primer). In addition, primers can provide good hiding power for subsequent recoating of a substrate.

The primer coating category is the fourth largest category with respect to sales. As shown in the emissions summary below, sales of primer coatings account for 807,000 pounds or 4.6 percent of the total aerosol paint sales in California in 1992. The primer category is also the fifth largest category in terms of emissions producing 579,000 pounds of VOC emissions or 4.3 percent of the total reported emissions for California in 1992.

**Table IV-6**
**Primer Coating**
**Summary of Estimated 1992 Emissions and Sales**

| Number of Products | Total Category Sales (Lbs/Yr) | Market Share (%) | Emissions (Lbs/Yr) | Emissions (% of total) |
|---|---|---|---|---|
| 84 | 807,000 | 4.6% | 579,000 | 4.3% |

Source: Battelle Report, 1994.

Product Use:

Primers may be used in all areas where paints and coatings are applied. Therefore, aerosol primers are used by a wide variety of aerosol paint users, including professional and home use painters, maintenance painters, artists, and hobbyists.

Primers are available for both interior and exterior applications. They can be applied on just about every type of substrate. These types of substrates include, but are not limited to, cinder block, wallboard, masonry, stucco, plaster, wood, rattan, reed, wicker, glass, tile, porcelain, fiberglass, and various metals.

The procedure for applying a primer is fairly universal and is similar to that described in the application procedure for flat aerosol paints. Depending on the type of primer used, drying time can take from 1 to 24 hours.

Product Marketing:

General primers are sold in a variety of establishments such as paint supply stores, hardware stores, home supply stores, and automotive supply stores. General primers may also be sold in automotive supply stores because they can also be applied on nonautomotive metal substrates.

According to the ARB Aerosol Paint Survey, the following 23 companies manufacture or distribute aerosol primers:

Ace Products
Aerosol Maintenance Products*
Aervoe-Pacific Company Inc.*
Coverite*
DAP Inc.*
**Dunn-Edwards Corporation**
Imperial Paint Company*
K-Mart
**Kop-Coat Inc.***
Krylon/Dupli-Color Products
Loctite Corporation
Plasti-kote Company Inc.*
PPG Industries
Rust-oleum Corporation
Seymour of Sycamore
Sherwin-Williams
Sprayon Industrial
State Chemical Manufacturing Co.
Tru-Test Manufacturing Company
William Zinsser & Company
X-I-M Products Inc.*
Zehrung Corporation*
**Zynolyte Products Company**

Companies that are listed above that are shown in **bold** are located in California, while companies that identified themselves as small businesses in the ARB Aerosol Paint Survey have an asterisk (*) by their name.

Based on the ARB Aerosol Paint Survey, a total of 807,000 pounds of primer coatings were reported sold. Of these, 14 percent were sold as industrial products, 64 percent were sold as household products, and 22 percent were sold as both industrial and household products. Also, 6 percent of the primer coatings were marketed specifically for sale in the Bay Area Air Quality Management District (BAAQMD) in order to comply with BAAQMD Rule 8-49.

Product Formulation:

As previously stated, primers must be formulated to provide such characteristics as protection, adhesion, build, and hiding power. The formulations will vary depending on the intended function.

General primers often utilize some type of modified alkyd resin system such as acrylic-modified alkyds, vinyl-toluene modified alkyds, and cellulose nitrate modified alkyds (Plasti-kote, Inc., 3/21/94). Some of the advantages of using the modified alkyd resins are that they provide excellent water, chipping and peeling resistance, good exterior durability, and good adhesion. Cellulose based resins provide the advantage of drying quickly. Other solids in primer formulations include pigments such as carbon black (for high tinting strength) and titanium dioxide (for hiding power), silicates to provide a "flat" finish, and barium sulfate or barium metaborate for use as extender pigments and for imparting good build. Primers typically have a higher solids content than other coatings to provide better hiding and build. This is consistent with the ARB Aerosol Paint Survey, which indicated that the primer coating category has the second highest sales-weighted average solids content at 27 percent by weight. According to the ARB Aerosol Paint Survey, solvent-borne products had a much higher solids content than water-borne products. Specifically, the survey showed that the sales-weighted average solids content for solvent-borne products was 27 percent, compared to 15 percent for water-borne products.

The VOC content in general primers is contributed by the VOC solvents and propellants used in these products. General primers usually contain a combination of solvents, including the following: ketones, aromatic hydrocarbons, alcohols, esters, and mineral spirits. The most common propellants used in general use primers are hydrocarbon propellants such as propane, isobutane, and n-butane. According to the ARB Aerosol Paint Survey, the sales-weighted average VOC content in general primers was 72 percent, with a sales weighted average VOC solvent content of 47 percent, and a sales-weighted average propellant content of 25 percent. According to the ARB Aerosol Paint Survey, the minimum VOC content of the products sold in this category was 39 percent; however, it should be noted that a few of the products that were reported to have the lowest VOC content contained methylene chloride, which is exempt from the definition of VOC. According to the ARB Aerosol Paint Survey, the emissions of methylene chloride from these products were estimated to be 9,300 pounds in 1992. No products in this category were reported to contain 1,1,1-trichloroethane. The lowest VOC content reported without exempt compounds was 50 percent, with a maximum reported at 96 percent. The ARB Aerosol Paint Survey also revealed that water-borne formulations represented sales of less than 1 percent of the total sales in this category.

Some primers with specialized functions may have unique formulations. One example is a rust control primer that is formulated to provide resistance to rust, corrosion, weathering, fading, chipping, grease, and oil (State Chemical, Product Label, KOT Rust Control Primer, 1993). This type of formulation contains many of the ingredients listed above; however, it

may also include zinc oxide and iron oxide for corrosion and rust protection. Another example is a cold zinc primer which may contain up to 96 percent zinc in the paint solids (Aerosol Systems, Inc., Product Label, Cold Zinc Primer, 1993). This zinc primer is important because it can provide cathodic protection or galvanic action against corrosion for iron or steel surfaces such as sheet metal, heating and air conditioning equipment, oil and pipeline equipment, marine equipment and playground equipment.

Proposed VOC Standard:

The proposed VOC standard for general primers is 60 percent by weight, consistent with the limit established in the BAAQMD aerosol paint rule. This standard is commercially and technologically feasible, as demonstrated by the data generated from the ARB Aerosol Paint Survey. According to the survey, there are 19 complying products that currently comply with the proposed 60 percent standard without the use of exempt compounds, such as methylene chloride. The 19 complying products are marketed by the following 12 companies: Aervoe-Pacific Co., Inc., DAP Inc., Imperial Paint Co., K-Mart, Kop-Coat Inc., Krylon/Dupli-Color Products, Rust-oleum Corp., Sprayon Industrial, Tru-Test Manufacturing Co., William Zinsser & Co., Zehrung Corp, and Zynolyte Products. The sales of these products are estimated at about 20 percent of the aerosol primer sales in California in 1992.

As mentioned before, in the BAAQMD, general primers are required to meet a 60 percent VOC standard. This requirement has been in effect since August 1991. However, of the 19 complying products being sold in California, only 5 products are being exclusively sold in the Bay Area. This indicates that 14 complying products currently compete with the higher VOC products being sold throughout the rest of the state.

As shown in the ARB Aerosol Paint Survey, both water-borne and high solids solvent-borne complying formulations are currently sold in California. Therefore, noncomplying formulations can reformulate using either technology. The techniques available to reformulate to higher solids solvent-borne and water-borne formulations are described in detail in Chapter V.

It is also important to note that the primer coatings category is the fourth largest category with respect to sales and the fifth largest category with respect VOC emissions. Therefore, being a large source of emissions, it is important that the maximum feasible emission reduction be achieved for this category.

**REFERENCES**

Aerosol Systems, Inc., Product Label, Cold Zinc Primer, 1993.

Air Resources Board Aerosol Paint Survey, February 25, 1993.

Battelle Memorial Institute, Survey of Emissions from Solvent Use-Volume I: Aerosol

Paints, Prepared for California Air Resources Board, Contract A132-085, September 16, 1994.

DAP, Inc., Product Label, Derusto Rust Preventative Primer.

Plasti-kote Company, Inc., Product Label, Super Primer.

Plasti-kote Company, Inc., Product Label, Anti-Rust Primer.

Plasti-kote Company, Inc., Product Label, Ultra Primer.

Plasti-kote Company, Inc., Telephone Conversation with ARB staff, March 21, 1994.

Rust-oleum Corporation, Written Correspondence to ARB, October 21, 1993.

Seymour of Sycamore, Inc., Product Information Sheet for "Hi-Tech" Industrial "MRO" Primers, February 1992.

Seymour of Sycamore, Inc., Telephone conversation with ARB staff, June 10, 1994.

The State Chemical Manufacturing Co., Product Label, KOT Rust Control Primer, 1993.

X-I-M Products, Inc., Product Label, 400-W White, Primer/Sealer/Bonder.

X-I-M Products, Inc., Product Description Sheet, 400-W White, Primer/Sealer/Bonder.

## G. ART FIXATIVES OR SEALANTS

Proposed VOC Standard (1996): 95.0%

Product Description:

An art fixative or sealant is a clear coating, including art varnish, workable art fixative, and ceramic coating, which is designed and labeled exclusively for application to paintings, pencil, chalk, or pastel drawings, ceramic art pieces, or other closely related art uses. These products are used to provide a final protective coating to artwork or to fix preliminary stages of artwork while providing a workable surface (e.g. the artwork can be applied on the coating) for subsequent revisions. They are generally identified by their labels as "final fixative," "spray fix," "matte spray fix," "workable fixative," "matte finish," "dulling spray," "ceramic coating," "glaze," "clear glaze," "crystal clear," "picture and oil painting varnish," and "retouch varnish sprays." These sprays are used in professional and home settings.

In the BAAQMD aerosol paint regulation, art varnishes and workable art fixatives have been placed in separate categories with VOC limits of 92 percent and 95 percent,

respectively. However, due to their similarities in use, and to prevent confusion in categorizing products with overlapping uses, these categories are combined into one category in this draft regulation.

The art fixative or sealant spray coating category is a relatively small coating category. Sales of art fixative or sealant spray coatings account for 39,000 pounds, or less than 1 percent of the aerosol paint sales in California in 1992. As shown in the emissions summary below, these products make up a small segment of the aerosol paints emissions with 36,200 pounds of VOC emissions or less than 1 percent of the total reported emissions in California in 1992.

**Table IV-7**
**Art Fixative or Sealant Coatings**
**Summary of Estimated 1992 Emissions and Sales**

| Number of Products | Total Category Sales (Lbs/Yr) | Market Share (%) | Emissions (Lbs/Yr) | Emissions (% of total) |
|---|---|---|---|---|
| 10 | 39,000 | < 1.0% | 36,200 | < 1.0% |

Source: Battelle Report, 1994.

Product Use:

Art fixatives or sealants are used by painters, art restorers, conservators, calligraphers, drafting people, photographers, film developers, modelers, document preservers, and television, movie studio, photography and production studio technicians, to name a few. The major uses of the art fixative and sealant products may be divided into several broad groups. However, it should be noted that due to the variety of products in this category, there is some overlap in much of their uses.

Workable art fixative sprays provide lasting protection while still allowing for a workable surface. The fixatives usually dry within seconds. Fixative sprays create a surface that protects artwork such as pencil, charcoal, chalk, and pastel drawings, calligraphy, layouts, and more, from smudges, fingerprints, and wrinkles, while allowing the surface to be reworked or revised with the same or different medium (Krylon, Product Label, Workable Fixatif; Loctite Corporation, Product Label, Blair Matte Spray Fix, Order No. 100, Product Label, Blair No Odor Spray Fix, Order No. 105). For example, they are used to isolate each stage of an artwork to prevent colors from bleeding into one another. Workable art fixative sprays can also provide a final protective finish for any of the above media.

Finishing sprays provide a permanent protective coating that usually dry within minutes. Some finishing sprays help to enhance colors and improve photo-contrast while others create a non-gloss finish that eliminates glossy sheen and light reflection on black-and-white or color surfaces (Krylon, Product Sheet, Artist Sprays, 1992). These sprays may be used to protect carbon copies, records, maps, display material, models, glossy photos and negatives, murals and reprints. They can also be used for protecting wood accessories, papier-mache, stenciling projects, tole paintings, ceramics, and other crafts. Finishing sprays exclude photograph coatings, which are used exclusively on finished photographs to allow corrective retouching, protection of the image, changes in gloss level, or to cover fingerprints. Dulling sprays provide a temporary dull finish to reduce shine or reflection on items to be photographed or videotaped. They help to improve fine details and wipe out "burn" reflections and "blind spots" (Krylon, Product Label, Dulling Spray (Semi-Drying), Product Sheet, Artist Sprays, 1992). The spray finish is removable and wipes off easily. Some photographic uses include dulling chrome, metal cans and reflective packaging. These sprays can also be used to create non-glare glass for framing.

Art varnishes are used to provide protection and uniform surface appearance to oil, acrylic or watercolor paintings. Art varnishes help to keep paintings looking "fresh" by providing protection from dirt, moisture and scuffing and providing brilliance without gloss (Krylon, Product Sheet, Artist Sprays, 1992). Some art varnishes allow for the reworking of paintings and can be removed by conservators for cleaning and restoring.

Ceramic coatings create a flat or glossy finish over chalk, oil or water-borne stain on fired ceramic or plaster crafts. Ceramic coatings also allow repeated layers of chalk or other painting to be applied and will retain color clarity without opaquing, cracking, or yellowing (Forrest Paint Co., Product Label, Porcelain Life, Product Data Sheet 1A57-F-022, Porcelain Life, 6/11/93). Some products have a flexible clear acrylic formula which may be applied on non-fired bisques and plaster objects.

Spray application can take from a few seconds to 30 minutes depending on the type of spray product used. It is generally recommended that there be adequate ventilation since these products contain VOCs. Before spraying, the art object should be standing or lying flat and be free of unwanted contamination. The application procedure is similar to that described for a flat coating spray.

Product Marketing:

Art fixatives or sealants are sold in specialty art supply stores, college stores, discount art stores, art supply catalogs, trade magazines, art festivals and trade shows, and hobby and craft stores. Some general department and discount stores may also sell these types of spray products.

According to the ARB Aerosol Paint Survey the following 5 companies make art fixatives or sealants:

| | |
|---|---|
| **Delta Technical Coatings** | Loctite Corporation |
| Forrest Paint Company* | Zynolyte Products Company |
| Krylon | |

Companies listed above that are shown in **bold** are located in California. None of these companies identified themselves as small businesses in the ARB Aerosol Paint Survey.

Based on the ARB Aerosol Paint Survey, 10 products in this category were sold statewide in California in 1992. Of these, less than 1 percent were sold as household products and over 99 percent were sold as both industrial and household products. Of these, none were specifically sold in the BAAQMD in order to comply with the BAAQMD's aerosol paint rule.

Product Formulation:

Generally, aerosol art fixatives and sealants contain acrylic polymers or nitrocellulose resins to protect the artwork (Forrest Paint Co., 3/31/94). Some of the advantages of using these resins are reportedly their durability, lack of discoloration on aging or exposure, chemical inertness, and quick dry time. Art fixatives and sealants may also contain flatting agents such as titanium, limestone, and silica to slightly reduce the gloss without adding color. The amount of solids in these products must be kept low to retain the clarity needed to show the artwork underneath the coating and to achieve a fast dry time. According to the ARB Aerosol Paint Survey, the sales-weighted average solids (resin) content for art fixatives and sealants was 5 percent by weight.

The general types of solvents used in the art fixative or sealant category include alcohols, acetates, and ketones (Forrest Paint Co., Product Label, Porcelain Life; Loctite Corporation, 8/12/92; Krylon, 9/1/93; ). However, in addition to these solvents, spray varnishes may contain heptane, VM&P naphtha, and Stoddard solvent (Krylon, Product Label, Kamar Varnish). The propellants used in aerosol art fixatives and sealants are propane, isobutane, and n-butane.

The ARB Aerosol Paint Survey shows that the sales-weighted average VOC content of the products in the art fixative or sealant category was 93 percent, with a minimum VOC content of 76 percent. There were no water-borne formulations reported in the survey. Products containing methylene chloride or 1,1,1-trichloroethane emitted approximately 800 pounds of these exempt compounds

Proposed VOC Standard:

The proposed VOC limit for art fixatives and sealants is 95 percent by weight. In the BAAQMD aerosol paint rule (Rule 8-49), art varnishes and workable art fixatives are regulated as separate categories with VOC content limits of 92 percent and 95 percent, respectively. As previously stated, this draft regulation combines the two BAAQMD categories because of the similarities in the use of these products. In order to regulate both types of products under a single VOC limit, the higher of the two VOC limits was proposed in order to allow workable art fixatives to retain their 95 percent limit, which has been in place in the BAAQMD since August of 1991.

The 95 percent VOC limit is essentially designed to cap the emissions from this category at their present levels. Although some products identified in the ARB Aerosol Paint Survey were reported to be higher than the proposed standard, the difference in VOC between these products and the 95 percent standard was slight. As stated previously, significant emission reductions will not be achieved in this category at the proposed initial VOC standard. However, emission reductions may be achieved when the 1999 standards become effective.

At the proposed 95 percent VOC limit, there are four complying products (excluding products with exempt compounds). These products were responsible for an estimated 34 percent of the total VOC emissions for this category in California in 1992. Of the four complying products being sold in California, none were specifically sold in the Bay Area, indicating that all the complying products are available throughout the rest of the state. The four complying products are marketed by the following three companies: Forrest Paint Company, Loctite Corporation, and Krylon.

**REFERENCES**

Air Resources Board Aerosol Paint Survey, February 25, 1993.

Battelle Memorial Institute, Survey of Emissions from Solvent Use-Volume I: Aerosol Paints, Prepared for California Air Resources Board, Contract A132-085, September 16, 1994.

Forrest Paint Company, Product Label, Porcelain Life.

Forrest Paint Company, Product Data Sheet 1A57-F-022, Porcelain Life, June 11, 1993.

Forrest Paint Company, Written Correspondence to ARB, March 31, 1994.

Krylon, Material Safety Data Sheet, Workable Fixative, September 1, 1993.

Krylon, Product Label, Dulling Spray (Semi-Drying).

Krylon, Product Label, Kamar Varnish.

Krylon, Product Label, Workable Fixatif.

Krylon, Product Sheet, Artist Sprays, 1992.

Loctite Corporation, Product Label, Blair Matte Spray Fix, Order No. 100.

Loctite Corporation, Product Label, Blair No Odor Spray Fix, Order No. 105.

Loctite Corporation, Material Safety Data Sheet, Blair Workable Matte Fix, August 12, 1992.

## H. AUTO BODY PRIMER SPRAYS

Proposed VOC Standard (1996): 80.0%

Product Description:

An auto body primer is a heavily pigmented automotive primer or primer surfacer coating that is applied directly to an uncoated vehicle body substrate or on top of a precoat. The purpose of an auto body primer is to provide corrosion resistance and to build a repair area to a condition in which, after drying, it can be sanded to a smooth surface. Auto body primers also provide a protective coat over the substrate and help to prepare the surface for subsequent coats. They can fill in nicks, scrapes, scratches, etc., to the original level of the surface; prevent rust; can be sanded or recoated; and are compatible with lacquer, acrylic, enamel, and other topcoats. These automotive products are generally labeled as "sandable primers," "spot filler and primers," "primer surfacers," "primer sealers," "sanding primers," "spray primers," and "truck and van primers."

Auto body primers have certain distinguishing characteristics that separate this category from the general primer category. According to one manufacturer, their auto body primers are specially formulated to withstand the application of automotive lacquer resin topcoats and to be sandable (Rust-oleum, 10/21/93). Their general primers cannot be topcoated with automotive lacquers because the solvents in these topcoats will cause "lifting" of the general primers. In addition, there is a substantial amount of magnesium silicate in their autobody primers that allow them to be sanded to a very smooth finish, which is desired for automotive repair and refinishing.

The auto body primer coating category is the third largest aerosol paint category in terms of sales, and the fourth largest in terms of VOC emissions, based on the ARB Aerosol Paint Survey. As shown in the emissions summary below, sales of auto body primer coatings accounted for 824,000 pounds or 4.7 percent of the total aerosol paint sales in California in 1992. These products also produced an estimated 633,000 pounds of VOC emissions or 4.7 percent of the total reported emissions in California in 1992.

**Table IV-8**
**Auto Body Primer Coatings**
**Summary of Estimated 1992 Emissions and Sales**

| Number of Products | Total Category Sales (Lbs/Yr) | Market Share (%) | Emissions (Lbs/Yr) | Emissions (% of total) |
|---|---|---|---|---|
| 27 | 824,000 | 4.7% | 633,000 | 4.7% |

Source: Battelle Report, 1994.

Product Use:

Automotive body primers are used by professionals who work in automotive body repair and automotive refinishing shops. Home enthusiasts who remodel, refinish, or repair motor vehicles also use these products. Although automotive body primers are primarily used on vehicles having metal substrates, some auto body primers may also be applied on wood and fiberglass substrates.

Automotive body primers are applied like most other types of aerosols. The application procedure is similar to that described for the application of flat coatings.

Product Marketing:

Establishments which sell auto body primers include automotive and home supply stores, discount department stores, new car dealerships, recreational and utility trailer dealers, motorcycle dealers, and automotive paint and supply stores.

According to the ARB Aerosol Paint Survey the following 8 companies manufacture auto body primers:

| | |
|---|---|
| Sprayon, Industrial | Plasti-kote Corporation* |
| Dynatron/Bondo Corporation | Rust-oleum Corporation |
| Kurfees Coatings Inc.* | Valspar Corporation |
| Marson Corporation* | **Zynolyte Products Company** |

Of the eight companies listed above, only Zynolyte Products Company, denoted in **bold**, was reportedly located in California. Three of the above companies identified themselves as a small business, as noted with an asterisk (*).

According to the ARB Aerosol Paint Survey, 51 percent of the auto body primer market was for household/consumer use, with 4 percent sold for industrial use only, and 46 percent sold for either use. The survey also showed that about 6 percent of these products were marketed specifically for sale in the Bay Area Air Quality Management District (BAAQMD) in order to comply with the BAAQMD's aerosol paint rule.

Product Formulation:

As previously stated, auto body primers are specially formulated to withstand the application of lacquer resin topcoats. These products must also use resins that are sandable, meaning that they must dry to form a hard surface that can be sanded. Some additional desired characteristics are having a fast dry and good fill capabilities (Plasti-kote, 3/21/94). The general types of resins used are acrylic lacquers, modified short oil alkyd resins, and epoxy resins (Plasti-kote, 3/21/94; Rust-oleum, 10/21/93; Sprayon, 10/25/93). These types of resins help to provide for such characteristics as "sandability," good exterior durability,

chipping and peeling resistance, and good water resistance. Extender pigments such as talc and calcium carbonate may be used to control gloss, texture, suspension, and viscosity and white pigment such as titanium dioxide may be used to provide hiding power. According to the ARB Aerosol Paint Survey, the auto body primer category had the third highest solids level compared to the other major aerosol paint categories, with a sales-weighted average solids level of 22 percent (Battelle, 1994).

All of the products in this category were reported to be solvent-borne based on the ARB Aerosol Paint Survey. According to the ARB Aerosol Paint Survey, the sales-weighted average VOC content of auto body primers was 77 percent, with the minimum VOC content reported to be 52 percent, and the maximum VOC content reported to be 98 percent. The sales-weighted average percent VOC solvent in these products was reported to be 55 percent, with a sales-weighted average percent propellant of 22 percent. The solvents used in auto body primers include alcohols, aromatic hydrocarbons, ketones and acetates (Plasti-kote, 6/2/93; Zynolyte (Major Paint), 6/11/93). The typical propellants used are propane and isobutane. No products in this category were reported to contain 1,1,1-trichloroethane. However, products containing methylene chloride emitted 7,600 pounds of this exempt compound.

Proposed VOC Standard:

The proposed VOC limit for auto body primers is 80 percent by weight, consistent with the standard required by the BAAQMD's aerosol paint rule. This standard is both technically and commercially feasible as evidenced by the ARB Aerosol Paint Survey. According to the ARB Aerosol Paint Survey, there are 13 complying products (excluding products with exempt compounds) that contributed an estimated 45 percent of the sales in California in 1992. In addition, the survey shows that the sales-weighted average VOC content of the auto body primers was 77 percent, below the proposed 80 percent standard. The 13 complying products are marketed by the following six companies: Dynatron/Bondo Corporation, Krylon/Dupli-Color Products, Kurfees Coatings Inc., Marson Corporation, Plasti-kote Corporation, and Rust-oleum Corporation. It should also be noted that of the 13 complying products being sold in California, only two products are being exclusively sold in the Bay Area, which indicates that 11 complying products are sold statewide and compete with higher VOC products in this category.

Manufacturers of auto body primers above the proposed 80 percent standard can reformulate their products to comply with the proposed regulation by increasing the solids content of their formulations. As discussed in Chapter V, higher solids formulations may be made by increasing the amount of low viscosity paint solids, using lower viscosity resins, or using higher amounts of stronger solvents such as methyl ethyl ketone and methyl isobutyl ketone which help to provide a sprayable viscosity at a higher solids content.

## REFERENCES

Air Resources Board Aerosol Paint Survey, February 25, 1993.

Battelle Memorial Institute, Survey of Emissions from Solvent Use-Volume I: Aerosol Paints, Prepared for California Air Resources Board, Contract A132-085, September 16, 1994.

Plasti-kote Company, Inc., Material Safety Data Sheet, Sandable Primers/Spot Fillers, June 2, 1993.

Plasti-kote Company, Inc., Telephone Conversation with ARB staff, March 21, 1994.

Rust-oleum Corporation, Written Correspondence to ARB, October 21, 1993.

Sprayon, Telephone Conversation with ARB staff, October 25, 1993.

Zynolyte Products Company (Major Paint Company), Material Safety Data Sheet, All Purpose 1706 Auto Red Oxide, June 11, 1993.

## I. AUTOMOTIVE BUMPER AND TRIM PRODUCTS

Proposed VOC Standard (1996): 95.0%

Product Description:

Automotive bumper and trim products are used to repair and refinish automotive bumpers and plastic trim parts. These automotive products help to restore the appearance of rubber bumpers, moldings, mats, mud guards, rear window plastic louvers, and other closely related parts. This category encompasses several types of automotive bumper and trim products that can be identified by their labels as "bumper coaters," "trim paints," "flexible bumper sealers," and "flexible primer surfacers," among others. These products differ from auto body primers and automotive exact match finishes in that they are for use exclusively on automotive bumpers and plastic trim pieces.

The automotive bumper and trim coating category is one of the smaller aerosol paint categories in terms of sales and emissions. As shown in the emissions and sales table, these products accounted for less than 1 percent of the sales and emissions from aerosol paints. According to the ARB Aerosol Paint Survey, auto bumper and trim products accounted for sales of 89,600 pounds in California in 1992, and VOC emissions of 64,700 pounds.

**Table IV-9**
**Automotive Bumper and Trim Coatings**
**Summary of Estimated 1992 Emissions and Sales**

| Number of Products | Total Category Sales (Lbs/Yr) | Market Share (%) | Emissions (Lbs/Yr) | Emissions (% of total) |
|---|---|---|---|---|
| 11 | 89,600 | < 1.0% | 64,700 | < 1.0% |

Source: Battelle Report, 1994.

Product Use:

Automotive bumper and trim products are used by professionals who work in new car dealerships, rental and leasing agencies, automotive repair and refinishing shops, and detailing shops. Home enthusiasts who remodel, refinish, repair, or detail motor vehicles also use these products. The automotive bumper and trim product category encompasses a variety of products with specialized uses and applications, some of which are briefly explained below.

Flexible bumper sealers are designed to eliminate sanding scratches and to seal repaired areas prior to priming or color coding (painting vehicle bumpers or trim to match the color of the vehicle body). Before a bumper sealer is applied, the surface should be washed, cleaned with a prep cleaner, and sanded lightly with size 400 paper to remove any loose paint. These products are applied in a manner similar to other aerosol paints as described in the section on flat paint products. All adjacent areas not intended to be coated should be masked off to prevent overspray. Spray application is best done in the ambient temperature range between 70° F and 80° F. The container should be shaken vigorously for at least one minute to insure color uniformity and prevent clogging. The product is then applied with steady even stokes at approximately 12 inches from the surface. Since several thin coats work better than a single heavy coat, light "mist" coats should be applied, allowing 5 to 10 minutes between coats. A 30 minute drying time is recommended before priming with a flexible primer surfacer or coating with a flexible bumper coater.

Flexible primer surfacers are applied to the bumper prior to application of a topcoat for the purpose of corrosion resistance, adhesion of the topcoat, and to promote a uniform surface by filling in surface imperfections. Flexible primer surfacers can be used on urethane bumpers, fiberglass, plastics and metal. They are usually fast drying and contain a high solids content for faster build with less applications. To apply flexible primer surfacers, the same application procedure as that for flexible bumper sealers is recommended.

Flexible bumper coaters are topcoats that are designed for easy reconditioning of bumpers. They are formulated to match the original equipment manufacturer (OEM) criteria for gloss and color. The same application procedure as that for flexible bumper sealers is

followed, except that a final drying time of up to 48 hours is recommended to attain full hardness.

Trim paints are formulated to match the OEM finish on automotive exterior plastic trim components. Many of these are designed for maximum adhesion on properly prepared surfaces without the use of primers. To apply these products, the general use directions similar to that for flexible bumper sealers should be followed.

Product Marketing:

Establishments which sell automotive bumper and trim products include automotive and home supply stores, discount departments, new car dealerships, recreational and utility trailer dealers, motorcycle dealers, and automotive paint and supply stores.

According to the ARB Aerosol Paint Survey, the following 5 companies manufacture or market automotive bumper and trim products:

| | |
|---|---|
| 3M | Krylon/Dupli-Color Products |
| **BAF Industries** | Plastic-kote Company Inc.* |
| Dynatron/Bondo Corporation | |

Companies listed above that are shown in **bold** are located in California, while companies that identified themselves as small businesses in the ARB Aerosol Paint Survey have an asterisk (*) by their name. As shown, BAF Industries was the only company in this category with a headquarters based in California, and Plasti-kote Company was the only company which identified itself as a small business in the ARB Aerosol Paint Survey.

The survey also showed that approximately 14 percent of the products sold in this category were for industrial use, with 41 percent sold for household use, and 44 percent sold for both industrial and household use. All of these products were distributed throughout California and none were marketed specifically for sale in the BAAQMD.

Product Formulation:

All of the automotive bumper and trim products in the ARB Aerosol Paint Survey were solvent-borne products. The typical resins used include acrylic and vinyl resins, or a combination of the two to provide a film with toughness, and flexibility (Plasti-kote, 3/21/94). Some added advantages of these types of resins are reportedly good water and exterior weather resistance. The sales-weighted average solids content for these products was shown to be approximately 20 percent based on the ARB Aerosol Paint Survey.

According to the ARB Aerosol Paint Survey, the sales-weighted average VOC content was 72 percent, with a wide range in VOC from a minimum of 62 percent to a maximum of 98 percent. The survey also showed that the sales-weighted average percent VOC solvent and

propellant was 46 percent and 26 percent, respectively. Typical solvents used in these products are reportedly ketones, aliphatic and aromatic hydrocarbons, mineral spirits, alcohols, and acetates (3M, 5/3/93; Dynatron/Bondo, 8/6/93; Plasti-kote, 5/12/93). The typical propellants used are propane and isobutane; however, one product contained a dimethyl ether/propane propellant (3M, 5/3/93). Products containing 1,1,1-trichloroethane (TCA) emitted 2,300 pounds of TCA, while products containing methylene chloride (MC) emitted 5,100 pounds of MC.

Proposed VOC Standard:

The proposed VOC standard for automotive bumper and trim products is 95 percent by weight, consistent with the standard proposed in the Bay Area Air Quality Management District's (BAAQMD) aerosol paint rule. This standard is designed to essentially cap emissions at their current levels, rather than achieve significant emission reductions. However, emission reductions may be achieved from this category when the 1999 VOC limits become effective.

The standard for automotive bumper and trim products is much higher than the standard for general flat and nonflat coatings because of the specialized applications for some of these products, and the need for quick dry times. Many of these products achieve this quick dry time using high-VOC, low-solids formulations with low viscosity, and a finely atomized spray. In the automotive repair and refinishing industry, products that have quick dry times are desired because they help to minimize the possibility that dust and other types of contamination will stick to these coatings after application.

Based on the ARB Aerosol Paint Survey, there are 8 complying products in the automotive bumper and trim category, excluding products with exempt compounds. These products accounted for an estimated 65 percent of the market in this category in 1992. As mentioned previously, in the BAAQMD, automotive bumper and trim products have been required to meet a 95 percent VOC level since August 1991. Of the 8 complying products being sold in California, none is being exclusively sold in the Bay Area, demonstrating that the complying products are not manufactured to comply with the BAAQMD rule. The 8 complying products are marketed by the following 5 companies: 3M, BAF Industries, Dynatron/Bondo Corporation, Krylon/Dupli-Color Products, and Plasti-kote Company Inc.

**REFERENCES**

Air Resources Board Aerosol Paint Survey, February 25, 1993.

Battelle Memorial Institute, Survey of Emissions from Solvent Use-Volume I: Aerosol Paints, Prepared for California Air Resources Board, Contract A132-085, September 16, 1994.

3M, Material Safety Data Sheet, Flexible Parts Coating, May 3, 1993.

Dynatron/Bondo Corporation, Material Safety Data Sheet, Easy Finish Bumper Coating, August 8, 1993.

Plasti-kote Company, Inc., Material Safety Data Sheet, Bumper Paint, May 12, 1993.

Plasti-kote Company, Inc., Telephone Conversation with ARB staff, March 21, 1994.

## J. AVIATION PROPELLER COATINGS

Proposed VOC Standard (1996): 84.0%

Product Description:

Aviation propeller coatings are aerosol paints used to protect aircraft propellers from the abrasion, corrosion, wear, and tear that occurs during normal operation. Aviation propeller coatings are very hard coatings and often are exposed to severe conditions. According to one manufacturer, as the aircraft goes through its take-off procedures, the dust that a plane passes through can produce the same affect as sandblasting on the propeller.

According to the ARB Aerosol Paint Survey, the aviation propeller coating category accounts for less than 1 percent of the total aerosol paint sales and emissions in California in 1992. However, the actual total category sales and emissions are not shown because only one company reported sales in this category, and we did not receive written permission from the company to release this data.

**Table IV-10**
**Aviation Propeller Coatings**
**Summary of Estimated 1992 Emissions and Sales**

| Number of Products | Total Category Sales (Lbs/Yr) | Market Share (%) | Emissions (Lbs/Yr) | Emissions (% of total) |
|---|---|---|---|---|
| 1 | — | < 1.0% | — | < 1.0% |

Source: Battelle Report, 1994.

Product Use:

Aviation propeller coatings are designed for use exclusively on aircraft propellers, to protect the propeller from the extreme environmental conditions of take-off and normal operation. The coating must be extremely hard and tough, because these coatings must also endure the abrasive effects of contact with bugs, wind, rain, hail, and other severe conditions. Propeller coatings must also be able to withstand the extremely cold temperatures found in high altitudes. The propeller topcoating is typically a flat coating, because it must retard the

glare that could impair a pilot's visibility while flying. These coatings are typically applied over aviation primer coatings for added protection.

Product Marketing:

Aviation propeller coating products are sold through industrial distributors and aviation supply stores. These products are not readily available to the public.

Plasti-kote Company is the only company identified in the ARB Aerosol Paint Survey as manufacturing or marketing aviation propeller aerosol paint products for California in 1992. This company identified itself as a small business, with headquarters located outside of California. In the survey, Plasti-kote reported that their aviation propeller coating was sold for industrial use only.

Product Formulation:

The aviation propeller coating identified in the ARB Aerosol Paint Survey uses an epoxy ester resin system. This resin system is reportedly used because it forms a tight cross-linked structure that is characterized by toughness, strong adhesion, and corrosion resistance.

The one aviation propeller aerosol coating identified in the ARB Aerosol Paint Survey had a reported VOC content of 82 percent, a solids content of 18 percent, and a propellant content of 25 percent. The product identified contains no methylene chloride or 1,1,1-trichloroethane.

Proposed VOC Standard:

The proposed VOC standard for aviation propeller coatings is 84.0 percent by weight. This standard is consistent with the VOC standard in the Bay Area Air Quality Management District's (BAAQMD) aerosol paint rule, which will help to minimize confusion in the marketplace and eliminate the need for manufacturers to develop more than one formulation to sell in California. This standard is higher than the standard for general use flat and nonflat coatings because the epoxy resin that is reportedly necessary for this application has high viscosity and requires a high level of organic solvents to be sprayable (Plasti-kote).

The only aviation propeller coating identified in the ARB Aerosol Paint Survey complies with the proposed 84 percent VOC standard. Therefore, the proposed standard will not achieve emission reductions in 1996. However, emission reductions will be achieved when the 1999 standards become effective.

**REFERENCES**

Air Resources Board, Aerosol Paint Survey, February 25, 1993.

Battelle Memorial Institute, Survey of Emissions from Solvent-Use-Volume I: Aerosol Paints, Prepared for California Air Resources Board, Contract A132-085, September 16, 1994.

Plasti-kote Company, Telephone conversation with ARB staff, October 20, 1994.

## K. AVIATION OR MARINE PRIMER COATINGS

Proposed VOC Standard (1996): 80.0%

Product Description:

As defined in the proposed aerosol paint regulation, aviation or marine primers are coatings labeled and formulated to meet the federal specification, TT-P-1757A. These coatings are used for priming bare metal, and are designed to provide maximum bonding or adhesion to bare aluminum and steel (Tempo, 11/90). Typically, these coatings will contain zinc chromate and zinc oxide pigments to provide corrosion resistance.

While the definition for this category encompasses both aviation and marine primers, the ARB Aerosol Paint Survey only collected data on aviation primer coatings. This is because at the time of the survey, marine primers were not included in the definition for this category. Subsequent discussion at the workshops resulted in marine primers also being included. As a result, the estimated emissions and sales summary table only applies to aerosol aviation primer coatings.

The aviation primer coating category is a small category with respect to sales and emissions. As shown in Table IV-11, sales of aviation primer coatings accounted for less than one percent of the total sales and estimated VOC emissions in California in 1992. The ARB Aerosol Paint Survey identified only one company, Plasti-kote, Inc., as manufacturing or marketing an aerosol aviation primer aerosol paint product for use or sale in California in 1992. As stated before, subsequent changes to the draft Aerosol Paints regulation definition of this category have included marine primers in the aviation primer category. With the addition of marine primers another company has been identified as a manufacturer producing products subject to this category. Therefore, we assume that the sales and emissions of this category are actually higher than reported for 1992 in the survey. However since only one company reported sales of this category at the time of the ARB Aerosol Paint Survey, the actual total sales and emissions are not show in the following table.

**Table IV-11**
**Aviation or Marine Primer Coatings**
**Summary of Estimated 1992 Emissions and Sales**

| Number of Products | Total Category Sales (Lbs/Yr) | Market Share (%) | Emissions (Lbs/Yr) | Emissions (% of total) |
|---|---|---|---|---|
| 1 | — | < 1.0% | — | < 1.0% |

Source: Battelle Report, 1994.

Product Use:

Aviation primers are used as a prime coat on the propeller and other parts of an aircraft. When combined with the epoxy resin topcoat, the propeller and other parts are protected from the corrosion and deterioration that can occur from the extreme conditions which an aircraft must endure. A key performance characteristic of these primers, is the ability to adhere to the propeller or aircraft body which are often made of aluminum. Currently, one manufacturer uses a zinc chromate formulation in their coating product to provide good adhesion.

Marine primers provide protection and a barrier from the exposure of salt and fresh water. Aerosol marine primers are used for spot priming damaged or failed steel or nonferrous areas of a hull or superstructure (Kop-Coat, 6/23/93).

As with most aerosol coating products, finishes typically dry best when the product, surface, and air temperatures are the same. It is recommended that application should be occur on a clean, dry surface with temperatures between 70° to 80° F for optimum drying.

Product Marketing:

Aviation primer coating products, similar to the aviation propeller coatings, are sold through industrial distributors and aviation stores. These products are not readily available to the public. Marine primers are typically available to the public and can be purchased at marina stores. According to the ARB Aerosol Paint Survey, the one aviation primer coating reported was sold by Tempo Products Company, a Plasti-kote Company. Plasti-kote identified itself as a small business, with headquarters located outside of California in the ARB Aerosol Paint Survey. The product is sold for industrial use only.

Product Formulation:

An aviation or marine aerosol primer meeting federal specification TT-P-1757A, must meet certain formulation and performance criteria. For instance, these primers must contain at least 13 percent by weight solids, and at least 53 percent by weight of the solids content

must be pigment. Some of the performance criteria includes properties such as water resistance, hydrocarbon resistance, salt-spray resistance, weather resistance, and durability. The TT-P-1757A specification was developed by the Navy Air Warfare Center-Aircraft Division and is currently under revision. This specification is being revised due to environmental concerns of the federal government, and will allow for the phaseout of the zinc chromate formulations currently specified. The revised specification will incorporate two classes of formulations, chromate pigment systems and nonchromate pigment systems, until the total phaseout of zinc chromate occurs. Each of these classes will be divided into two subclasses. Each subclass will allow for current solvent-blend formulations and future low-VOC formulations (Doyle, 4/15/94). If the federal specification is revised, more emission reductions could occur from the use of these future low-VOC formulations.

The aviation zinc primer product identified in the ARB Aerosol Paint Survey uses an alkyd enamel resin system and can resist heat up to 250° F. According to the manufacturer, this primer has good resistance to abrasion and excellent resistance to corrosion. The primer is typically a flat coating with only six units of gloss using a 60° gloss meter. It is sold in 16 ounce cans and comes in yellow and green. Another primer produced by the same company, is a product recently introduced and formulated with zinc oxide to provide a safer alternative to the zinc chromate primers with equal performance. This product uses a modified alkyd enamel resin system in its formulation (Tempo, 11/90).

The ARB Aerosol Paint Survey showed that the aerosol aviation primer coating identified has a VOC content consistent with the federal specification for solids and pigment. This primer is a solvent-borne formulation and contains no methylene chloride or 1,1,1-trichloroethane (Battelle Report, 1994).

Proposed VOC Standard:

We are proposing an 80.0 percent VOC limit for aviation or marine primer coatings. At this level, the proposed VOC standard is 2 percent lower than the Bay Area Air Quality Management District's (BAAQMD) standard for aviation or marine zinc primers. However, we believe this standard is achievable because one manufacturer of aerosol aviation and marine primers identified in the ARB Aerosol Paint Survey has recommended a standard of 80.0 percent VOC (Kop-Coat, 6/15/93). According to the manufacturer, the standard could be achieved through a higher solids product with no change in resin type (Kop-Coat, 7/14/93). In addition, as stated previously, the federal specification for this category is currently being revised to allow for the phaseout of zinc chromate, the use of current solvent-blend formulations, and the future development of low-VOC formulations. This will provide the flexibility needed by manufacturers for reformulation of this category to a lower VOC level.

**REFERENCES**

Air Resources Board Aerosol Paint Survey, February 25, 1993.

Battelle Memorial Institute, Survey of Emissions from Solvent-Use-Volume I: Aerosol Paints, Prepared for California Air Resources Board, Contract A132-085, September, 16 1994.

Doyle, Pat, Navy Air Warfare Center-Aircraft, Telephone conversation with ARB staff, April 15, 1994.

Kop-Coat, Inc., Letter to ARB staff, June 15, 1993.

Kop-Coat, Inc., Letter to ARB staff, June 23, 1993.

Kop-Coat, Inc., Telephone conversation with ARB staff, July 14, 1994.

Tempo Products Company, A Plasti-kote Company, Tempo Aviation Aircraft Coating, Product literature, November 1990.

## L. CORROSION RESISTANT BRASS, BRONZE, AND COPPER COATINGS

Proposed VOC Standard (1996): 92.0%

Product Description:

Corrosion resistant brass, bronze, and copper aerosol coatings are clear coatings that are sprayed on bare brass, bronze, and copper to prevent tarnishing and corrosion of these metal surfaces. These products are designed to produce a thin, transparent film on brass, bronze, and copper objects, such as light fixtures and decorative objects. Ideally, the products leave the impression the object is uncoated.

Only one product in the corrosion resistant brass, bronze, or copper coating category was identified by the ARB. According to the manufacturer of this product, the coating prevents tarnish and corrosion from occurring by "...providing a tough, clear gloss film which complexes or reacts with the copper present in all these metals [brass, copper, bronze] for superior adhesion (Protective Coatings Unlimited, 12/19/93)."

As shown in the following table, corrosion resistant brass, bronze, or copper coatings accounted for sales of less than 2,000 pounds in 1992, contributing less than one percent of the sales and emissions from aerosol paints.

**Table IV-12**
**Corrosion Resistant Brass, Bronze, and Copper Coatings**
**Summary of Estimated 1992 Emissions and Sales***

| Number of Products | Total Category Sales (Lbs/Yr) | Market Share (%) | Emissions (Lbs/Yr) | Emissions (% of total) |
|---|---|---|---|---|
| 1 | 2,000 | < 1.0% | 1,800 | < 1.0% |

Source: Battelle Report, 1994.

* Data released by the written permission of Protective Coatings Unlimited.

Product Use:

Corrosion resistant brass, bronze, or copper coatings are used by both consumers and manufacturers of products made out of brass, bronze, or copper metals. Consumers use these coatings on uncoated brass, bronze, or copper objects, or on objects with similar coatings that need to be recoated because they are no longer providing adequate protection. Manufacturers use these coatings to provide a protective coating on manufactured goods. According to the label of the only product identified in the ARB Aerosol Paint Survey, the coating is applied in a manner similar to other aerosol paint products, as discussed in the "Product Use" section for flat aerosol paints. In addition, it is recommended that the product be applied when the relative humidity is below 60 percent (Protective Coatings Unlimited; Staybrite).

Corrosion resistant brass, bronze, or copper coatings are used on a variety of objects including: brass lamps, brass beds, marine equipment, plaques, name plates, statues, bells, instruments, frames, jewelry, hardware, and fixtures (Protective Coatings Unlimited; Staybrite).

Product Marketing:

Only one aerosol corrosion resistant brass, bronze, or copper coating was identified in the ARB Aerosol Paint Survey. The product, "Staybrite," is sold in a variety of retail outlets, including hobby and craft stores, home improvement centers, and through mail order businesses. Staybrite is manufactured by Protective Coatings Unlimited which identified themselves as a small business located outside California in the ARB Aerosol Paint Survey. Protective Coatings Unlimited indicated that their product is for both consumer/household and industrial uses.

Product Formulation:

The only corrosion resistant brass, bronze, or copper coating identified in the ARB Aerosol Paint Survey, "Staybrite," is a low solids product containing a thermoplastic acrylic

resin, a variety of VOC solvents, and hydrocarbon propellants (propane, isobutane, and n-butane). A small amount of corrosion inhibitor is also included in the formulation.

Proposed VOC Standard:

The VOC limit proposed for corrosion resistant brass, bronze, or copper coatings is 92 percent by weight. This VOC limit is consistent with the limit which has been in place in the Bay Area Air Quality Management District (BAAQMD) since the BAAQMD's aerosol paint rule (Rule 8-49) was amended in August, 1991.

According to the manufacturer, the thermoplastic acrylic resin used in "Staybrite" is a high molecular weight resin that must be reduced with organic solvents to reduce the viscosity to the point where it can be aerosolized. The proper viscosity is reported to be reached at about 8-10 percent resin with the remainder of the product consisting of VOC solvents and propellants, resulting in a high VOC content. The manufacturer also reported that the thermoplastic acrylic resin used achieves properties that cannot currently be duplicated with other resins. These properties are reported to include: water-clear transparency, durability in outdoor environments, flexibility, adhesion to metals, and resistance to water, alcohol, and other chemicals (Protective Coatings Unlimited, 12/19/93).

At the proposed 92 percent VOC level, the only product identified in the ARB Aerosol Paint Survey, "Staybrite," complies with the regulation. Therefore, the proposed standard will place a cap on emissions, rather than to achieve emission reductions from this category. Maintaining a standard consistent with the BAAQMD's is also desirable in that there will be a consistent VOC standard for this product category throughout the state. Additional emission reductions will be achieved from this category when the 1999 standards become effective. The proposed standard will provide the manufacturer with more time to develop a lower VOC formulation for the proposed 1999 standards.

**REFERENCES**

Air Resources Board Aerosol Paint Survey, February 25, 1993.

Battelle Memorial Institute, Survey of Emissions from Solvent Use-Volume I: Aerosol Paints, Prepared for California Air Resources Board, Contract A132-085, September 16, 1994.

Protective Coatings Unlimited, Inc., Letter to ARB staff, December 19, 1993.

Protective Coatings Unlimited, Inc., Staybrite Product label.

## M. EXACT MATCH FINISH - (a) ENGINE ENAMEL

Proposed VOC Standard (1996): 80.0%

Product Description:

Engine exact match finishes are defined as coatings that are designed and labeled exclusively to exactly match the color of an original, factory-applied engine paint. To qualify as a exact match finish, the product must be labeled with the name of the manufacturer for which they were formulated and one of the following: the original equipment manufacturer's (OEM) color code number, the color name, or another designation identifying the specific O.E.M. color to the purchaser.

To avoid confusing exact-match engine enamels with other coatings that are used on engines, it is important to note that only engine paints that fulfill the labeling requirements outlined above are included in this category. For example, engine paints labeled simply as "flat black," "semi-gloss black," or "aluminum" would be categorized as flats, non-flats, or metallics, respectively. These coatings would not be categorized as exact-match finish engine enamels as they do not fulfill the requirement that they be designed and labeled to exactly match the color of an original, factory-applied engine paint. In addition, engine paints are specifically excluded from the definition for "High Temperature Coatings." As shown in Table IV-13(a) below, engine exact match finishes comprise about one percent of the aerosol paint market with estimated sales of 178,000 pounds in 1992. The estimated VOC emissions from this category also account for about one percent of the emissions from aerosol paints at an estimated 140,000 pounds. There were 8 products reported in this category.

**Table IV-13(a)**
**Exact Match Finish: Engine Enamel**
**Summary of Estimated 1992 Emissions and Sales**

| Number of Products | Total Category Sales (Lbs/Yr) | Market Share (%) | Emissions (Lbs/Yr) | Emissions (% of total) |
|---|---|---|---|---|
| 8 | 178,000 | 1.0% | 140,000 | 1.0% |

Source: Battelle Report, 1994.

Product Use:

Exact-match engine enamels are is designed for coatings used to touch-up or recoat engine blocks or other engine components to match the original, factory applied finish. These coatings are often applied during engine rebuilding and other repair operations and, according to industry sources, include coatings used primarily for automotive restoration (Hydrosol, letter not dated). The application of these products is essentially similar to the procedures described for the flat aerosol paints.

Product Marketing:

Engine exact match coatings are generally available at automotive supply stores and through mail-order catalogues. They are labeled with colors such as Chevrolet Orange, Chevrolet Blue, G.M. Black, G.M. Blue, G.M. Alpine Green, Chrysler Blue, Ford/Chrysler Red, Ford Blue, Ford Green, Ford Grey, Cummins Beige, Ford/Mustang Blue, Pontiac Blue, Pontiac Blue Metallic, G.M. Blue (Seymour of Sycamore, 1992; Plasti-kote, Product Literature, "Plastikote The Winning Finish"; BAF Industries, 1989; Krylon Dupli-Color, 1991). They are also noted to be fast-drying, oil and gas resistant, able to withstand repeated exposure to surface temperatures of up to 500° F, and be resistant to blistering, flaking, cracking, and peeling (Krylon Dupli-Color, 1991).

The following 6 companies have been identified in the ARB's Aerosol Paint Survey as manufacturing or marketing engine exact match aerosol paint products:

| | |
|---|---|
| Aervoe-Pacific Company, Inc.* | Seymour of Sycamore |
| **BAF Industries** | The Valspar Corporation |
| Plasti-kote Company, Inc.* | **Zynolyte Company/Major Paints** |

Companies listed above that are shown in **bold** are located in California, while companies that identified themselves as small businesses in the ARB Aerosol Paint Survey have an asterisk (*) by their name.

According to the ARB Aerosol Paint Survey, 68 percent of the products in this category were sold for household use, with 16 percent sold for industrial use, and 15 percent sold for either use. The ARB Aerosol Paint Survey also shows that about 21 percent of the engine exact match coatings sold in California were for sale exclusively in the Bay Area Air Quality Management District (BAAQMD) in order to comply with the BAAQMD's aerosol paint rule (Rule 8-49).

Product Formulation:

Engine exact-match finishes are usually fast drying coatings utilizing modified alkyd resins (Sherwin-Williams, 4/14/94; Sherwin-Williams Sparvar, Product Label, "Sparvar Engine Color Spray Paint"; Plasti-kote, Industrial Coatings, Product Literature, "Plasti-kote Industrial Coatings General Purpose and Specialty Coatings"). According to the ARB Aerosol Paint Survey, all of the coatings in this category are solvent-borne. Typical solvents used in these coatings include petroleum distillates, methyl ethyl ketone, toluene, hexane, varnish maker's and painter's (V. M. and P.) naptha, xylene, acetone, and 1-methoxy-2-propanol acetate (BAF Industries, 1989; BAF Industries, 1993; Krylon Industrial, 1993). Propellants include hydrocarbons such as isobutane and propane.

Based on the ARB Aerosol Paint Survey, the sales-weighted average VOC content of engine exact-match finishes is estimated to be 79 percent, with a range from 51 to 90 percent.

The sales-weighted average solids content is estimated to be 18 percent, the sales-weighted average propellant concentration is 25 percent, and the sales-weighted average VOC solvent concentration is approximately 54 percent. No products were reported to contain methylene chloride. However, 7,000 pounds of 1,1,1-trichloroethane was emitted from the use of exact-match engine enamels.

Proposed VOC Standard:

The proposed VOC standard for engine exact-match coatings is 80 percent by weight. This is consistent with the Bay Area Air Quality Management District's aerosol paint rule, which has limited engine exact match coatings to 80 percent VOC since August of 1991.

The proposed standard for engine exact-match coatings is higher than the standard for general use flat and nonflat coatings because these coatings are designed to "melt in" to existing engine coatings, which may be more difficult using existing higher solids, low-VOC coatings.

The proposed 80 percent VOC standard is technologically and commercially feasible as demonstrated by the ARB Aerosol Paint Survey. The survey shows that most exact match engine enamels are already at or near the 80 percent VOC standard. Specifically, the survey shows that the sales-weighted average VOC content of the entire category (excluding 1,1,1-trichloroethane-containing products) is 82 percent, just above the proposed 80 percent VOC standard. In addition, 4 coatings (of the 8 reported) are presently at or below 80 percent VOC limit (again, excluding 1,1,1-trichloroethane containing products). The products complying with the proposed standard are being marketed by the following companies: Aervoe-Pacific, Plasti-kote Company, Inc., Seymour of Sycamore, and Zynolyte Products Company.

As mentioned previously, exact match engine enamels are required to meet an 80 percent VOC limit in the Bay Area Air Quality Management District. However, two of the four products identified in the ARB Aerosol Paint Survey that comply with the proposed 80 percent standard were not products for sale exclusively in the BAAQMD. This indicates that manufacturers believe that these lower VOC products can effectively compete with the higher VOC products in the marketplace.

Since all exact match engine enamels are currently solvent-borne coatings, noncomplying products are expected to reformulate their products by increasing the percentage of solids in the product. This reformulation technique is described in detail in Chapter V.

**REFERENCES**

Air Resources Board Aerosol Paint Survey, February 25, 1993.

Battelle Memorial Institute, Survey of Emissions from Solvent Use-Volume I: Aerosol Paints, Prepared for California Air Resources Board, Contract A132-085, September 16, 1994.

BAF Industries, Product Label, "Engine Compartment Paint," 1989.

BAF Industries, Material Safety Data Sheet, "Aerosol Engine Paints All Colors," 1993.

Hydrosol, Letter to ARB staff, undated (circa 1993).

Krylon/Duplicolor Products, Product Literature, "Automotive Products," October, 1991.

Krylon Industrial, Material Safety Data Sheet, "Engine Colors," February, 1993.

Plasti-kote Company Inc., Product Literature, "Plasti-kote Industrial Coating General Purpose and Specialty Coatings," Form No. IND 602-12-90.

Plasti-kote Company Inc., Product Literature, "Plasti-kote The Winning Finish," Form No. PK125-10-91.

Semour of Sycamore, Product Literature, "Pit Crew Semour E Series Environmentally Formulated Spray Paints," April, 1992.

Sherwin-Williams Company, Letter to ARB staff, April 14, 1994.

Sherwin-Williams Company, Product Label for "Sparvar Engine Color Spray Paint".

## M. EXACT MATCH FINISH - (b) AUTOMOTIVE

Proposed VOC Standard (1996): 88.0%

Product Description:

Automotive exact match finishes are topcoats that are designed and labeled exclusively to exactly match the color of an original, factory-applied automotive paint. To qualify as an exact match finish, the product must be labeled with the name of the manufacturer for which they were formulated and one of the following: the original equipment manufacturer's (OEM) color code number, the color name, or another designation identifying the specific O.E.M. color to the purchaser. Automotive clear coatings designed and labeled exclusively for use over automotive exact match finishes are also included in the automotive exact match category.

As shown in Table IV-13(b), automotive exact match finishes are estimated to account for less than one percent of the total sales in California in 1992. These products are also estimated to make up a less than one percent of the total 1992 aerosol paints emissions in

California. The sales and emissions data in the table below are being withheld until final data issues are resolved.

**Table IV-13(b)**
**Exact Match: Automotive**
**Summary of Estimated Sales and Emissions**

| Number of Products | Total Category Sales (Lbs/Yr) | Market Share (%) | Emissions (Lbs/Yr) | Emissions (% of total) |
|---|---|---|---|---|
| — | — | < 1.0% | — | < 1.0% |

Source: Battelle Report, 1994.

Product Use:

Automotive exact match coatings are used to exactly match the color of cars, trucks, or vans. These coatings are most often used during the touch-up of areas with minor damage. However, they may also be used to repaint doors, fenders, hoods, or other vehicle body panels. These coatings are not generally used to paint entire vehicles.

Automotive exact match coatings are applied like most other aerosol paints, as described under the section on flat paint products. However, sanding of the substrate with number 400 grit sandpaper may also be recommended to produce a smooth professional finish. Late model cars with base coat/clear coat paint require the use of a special automotive clear coating over the exact match base coat.

Product Marketing:

Automotive exact match coatings are sold in automobile supply stores, automobile dealerships, and by mail-order. In addition to the aerosol form, these coatings are available in nonaerosol brush-on and pen forms. Automobile exact match aerosols often are sold in 6-8 ounce containers, although they are also available in larger size cans for large vehicles or professional customers. There is a catalogue available at the point-of-purchase so that the consumer can determine the correct coating for the model and year of the vehicle to be painted. The catalogue will also specify whether or not an automotive clear coating is required over the basecoat.

According to the ARB Aerosol Paint Survey, most exact match automotive aerosol paint was sold for consumer use, with only a small percentage sold for industrial use. No products were reported in the survey for sale exclusively in the Bay Area Air Quality Management District in order to comply with the BAAQMD's aerosol paint rule.

Product Formulation:

Most automotive exact-match finishes utilize acrylic lacquers or nitrocellulose lacquers modified with acrylic groups (Plasti-kote, 5/16/94; Sherwin-Williams, 4/14/94), and a variety of pigments, both metallic and nonmetallic. According to the ARB Aerosol Paint Survey, the sales-weighted average solids content of these coatings is a relatively low 13 percent.

All of the products in the automotive exact match category are solvent-borne. The sales-weighted average VOC content, which is composed of the solvent and propellant, is estimated to be 86 percent, based on the ARB Aerosol Paint Survey. The sales-weighted average VOC solvent and propellant content is estimated to be 67 percent, and 19 percent, respectively. A variety of solvents are contained in these coatings, including acetone, aromatic hydrocarbons, 2-butoxy ethanol, ethyl acetate, ethyl alcohol, ethyl 3-ethoxy propionate, di-isobutyl ketone, isobutyl acetate, isopropyl alcohol, methylene chloride, methyl ethyl ketone, methyl isobutyl ketone, alcohol ester, propylene glycol monomethyl ether, toluene, and xylene (Plasti-kote, 9/24/93). The propellant is commonly a propane-isobutane mixture. The emissions of exempt compounds from automotive exact match finishes (methylene chloride or 1,1,1-trichloroethane) totaled approximately 1,5000 pounds.

Proposed VOC Standard:

The proposed standard for automotive exact-match coatings is 88 percent VOC by weight, consistent with the VOC limit required in the Bay Area Air Quality Management District since August of 1991. At this VOC level, all of the products comply with the proposed regulation.

According to one manufacturer, these products require a higher VOC content because they are often transparent finishes with low solids levels (Sherwin-Williams, 4/14/94). In addition, it is desirable to have a VOC standard that is consistent with the Bay Area Air Quality Management District so that there will be one standard throughout California.

Since most automotive exact match coatings are at or near 88 percent VOC, the proposed VOC level will hold most of these products to their current VOC levels, and the initial proposed limit will not achieve emission reductions from this category of products. However, emission reductions will be achieved when the 1999 standards become effective.

**REFERENCES**

Air Resources Board Aerosol Paint Survey, February 25, 1993.

Battelle Memorial Institute, Survey of Emissions from Solvent Use-Volume I: Aerosol Paints, Prepared for California Air Resources Board, Contract A132-085, September 16, 1994.

Plasti-kote Company, Inc., Material Safety Data Sheet, "Car Colors 8 oz.," September 24, 1993.

Plasti-kote Company, Inc., Telephone conversation with ARB staff, May 16, 1994.

Sherwin-Williams, Letter to ARB staff, April 14, 1994.

## M. EXACT MATCH FINISH - (c) INDUSTRIAL

Proposed VOC Standard (1996): 88%

Product Description:

Industrial exact match finishes are coatings that are designed and labeled exclusively to exactly match the color of an original, factory-applied paint on a manufactured product. To qualify as a exact match finish, the product must be labeled with the name of the manufacturer for which they were formulated and one of the following: the original equipment manufacturer's (OEM) color code number, the color name, or another designation identifying the specific OEM color to the purchaser.

As shown in Table 13(c) below, sales of industrial exact match coatings account for less than one percent of the total sales in California with about 57,000 pounds sold in 1992. These products are also estimated to account for less than one percent of the total aerosol paints emissions, with 47,000 pounds of VOC emissions in California in 1992.

**Table IV-13(c)**
**Exact Match: Industrial**
**Summary of Estimated 1992 Sales and Emissions**

| Number of Products | Total Category Sales (Lbs/Yr) | Market Share (%) | Emissions (Lbs/Yr) | Emissions (% of total) |
|---|---|---|---|---|
| 22 | 57,000 | < 1.0% | 47,000 | < 1.0% |

Source: Battelle Report, 1994.

Product Use:

Industrial exact match coatings are used primarily in industrial settings to touch-up manufactured goods such as metal office furniture, washing machines, clothes dryers, and refrigerators during or after manufacturing. These coatings are designed to touch up products that may have been nicked or scratched during assembly, or to finish areas that were covered by clips used to hang the object during coating. These coatings are also used by repair shops and by consumers to touch-up minor damage.

Product Marketing:

Industrial exact-match coatings are marketed to industrial users so that they may touch-up their finished product before shipping. There are also exact-match coatings available to the consumer for touching-up refrigerators, washing machines, clothes dryers, ranges, etc. These are available through paint stores and appliance stores.

The following nine companies have been identified in the ARB's Aerosol Paint Survey as manufacturing or marketing industrial exact match aerosol paint products:

| | |
|---|---|
| Forrest Paint Company* | Plasti-kote Company, Inc.* |
| Imperial Paint Company* | **Products/Techniques Inc.*** |
| Jacobsen/Div. of Textron, Inc. | Raabe Corporation* |
| Klinger Paint Company* | The Valspar Corporation |
| **Leggett & Pratt, Inc.** | |

Companies listed above that are shown in **bold** are located in California, while companies that identified themselves as small businesses in the ARB Aerosol Paint Survey have an asterisk (*) by their name.

According to the ARB Aerosol Paint Survey, 69 percent of industrial exact match coatings were sold as industrial use products, 8 percent were identified as products for household use, and 23 percent were for both uses. None of the products in this category were marketed specifically for use in the Bay Area Air Quality Management District in order to comply with BAAQMD Rule 8-49.

Product Formulation:

Industrial exact-match coatings utilize lacquers and acrylic lacquer resins (Custom-Pak Products, 1991), modified alkyds (Sherwin-Williams, 4/14/94), and also customer specified resins designed to match the same paint that is used on the production line (lacquers, vinyls, enamels, acrylics, and modifications of these) (Custom-Pak, 1991). The sales-weighted average solids level for these products is estimated to be 18 percent, based on the ARB Aerosol Paint Survey.

Aerosol industrial exact match coatings are solvent-borne coatings and are usually higher in VOC than the original coatings they are designed to touch-up, since the original coatings are typically formulated for spray guns or dip coating operations rather than for aerosol application. According to the ARB Aerosol Paint Survey, the sales-weighted average VOC content of these coatings was estimated to be 82 percent, with a range from 63 to 93 percent by weight. The sales-weighted average percent VOC solvent and propellant was reported to be 58 percent and 24 percent by weight, respectively. The solvents used in industrial exact match coatings are many of the same solvents used in other aerosol paints, including toluene, xylene and petroleum distillates. The propellants used are mainly isobutane

and propane. There were no products identified in the ARB Aerosol Paint Survey which contain methylene chloride or 1,1,1-trichloroethane.

Proposed VOC Standard:

The proposed standard for industrial exact-match coatings is 88 percent VOC by weight, which is consistent with the standard in effect in the Bay Area Air Quality Management District (BAAQMD) since August, 1991. At this level, over 99 percent of the market complies with the proposed standard in the regulation, based on the ARB Aerosol Paint Survey. The complying products are being marketed by Forrest Paint Company, Imperial Inc., Jacobsen, Klinger Paint Company, Leggett and Platt Inc., Products/Techniques Inc., and The Valspar Corporation.

At this time, according to manufacturers of these products, the exact match coatings require a higher solvent limit than the 65 percent VOC limit for nonflat aerosols for several reasons. First, many exact-match coatings are metallic coatings. According to industry sources, a high solids content limits the mobility of the metallic pigments and the ability of the metal flakes to lie flat in the film ( Plasti-kote, 11/2/93). Additionally, industry sources have stated that is not possible to match the color of an original high VOC metallic coating with a lower VOC (high-solids) coating (Semour of Sycamore, 9/27/93). Exact match coatings are also designed to melt-in to the pre-existing coating. This requires a high solvent concentration to solubilize the coating in place and allow the exact-match coating to "melt" in to the original finish (Raabe, 1993).

Since most industrial exact match coatings are already below 88 percent VOC, the initial proposed VOC limit will not achieve emission reductions from this category of products. However, additional emission reductions will be achieved when the 1999 future effective VOC standards become effective.

**REFERENCES**

Aerosol Paint Survey, California Air Resources Board, February 25, 1993.

Battelle Memorial Institute, Survey of Emissions from Solvent Use-Volume I: Aerosol Paints, Prepared for California Air Resources Board, Contract A132-085, September 16, 1994.

Custom-Pak, Letter to Brian Jennison of the BAAQMD, May 8, 1991 (attached to a letter from Custom-Pak to Air Resources Board, May 9, 1993).

Plasti-kote Company, Inc., Facsimile to ARB staff, November 2, 1993.

Raabe Corporation, Letter to ARB staff, May 24, 1993.

Seymore of Sycamore, Letter to ARB staff, September 27, 1993.

## N. FLORAL SPRAY

Proposed VOC Standard (1996): 95.0%

Product Description:

A floral spray is a coating designed and labeled for use on fresh, dried, or silk flowers, or other items in a floral arrangement for the purposes of coloring, preserving or protecting their appearance. This definition excludes those products that are labeled for use on objects such as baskets, wood, wreaths, plastics, and other decorative items unless they are part of a fresh, dried, or silk floral arrangement.

According to professional florists, floral sprays are especially helpful during special events such as valentine's day, weddings, banquets, birthdays, trade shows, parades, and other activities. During these occasions, the florist or floral artist can receive tens or hundreds of orders in a short period of time. With the aid of floral sprays, fresh floral arrangements can be prepared several days in advance of the occasion while still maintaining the freshness of the flowers.

A variety of floral spray colors are available. Some examples of the colors available are "ice blue," "touch'o pink," "silvermarine," "pearl shimmer," and "glossy wood tone." Some clear sprays are also available to prolong the beauty and freshness of the flower without adding color. Most floral sprays are packaged in 12 ounce containers.

According to the ARB Aerosol Paint Survey, the floral spray coatings category accounted for 1.6 percent (209,000 pounds) of the VOC emissions in California in 1992. The number of products sold, the total category sales, and the percent market share are not shown because the two companies that reported data requested that sales data be kept confidential.

**Table IV-14**
**Floral Aerosol Spray Coatings**
**Summary of Estimated 1992 Emissions and Sales**

| Number of Products | Total Category Sales (Lbs/Yr) | Market Share (%) | Emissions (Lbs/Yr) | Emissions (% of total) |
|---|---|---|---|---|
| -- | --- | --- | 209,000 | 1.6% |

Source: ARB Aerosol Paint Survey (data not included in Battelle Report).

Product Use:

Floral sprays are used by professional florists, floral artists, decorators, and hobbyists. Floral sprays allow the florist and floral artist to enhance the color and preserve the freshness of flowers. Bruised flowers may also be temporarily "saved" using floral spray. Floral

sprays also allow the florist of floral artist to add tinting to dried or silk flowers and other items in a floral arrangement. The procedure for applying the floral sprays is similar to that described for flat spray coatings.

Product Marketing:

Floral sprays are usually sold to floral shops and other professional users by direct distributors. However, floral sprays are also sold in specialty arts and crafts supply stores, trade shows, art supply catalogs, trade magazines, and festivals. In some cases, discount department stores sell floral sprays.

According to the ARB Aerosol Paint Survey, the following 2 companies manufacture or market floral spray paint products: Design Master Color Tool, Inc., and Floralife, Incorporated. Both of these companies identified themselves as small businesses in the ARB Aerosol Paint Survey.

Of all the products sold in this category, 92 percent were sold as both industrial and household products and 8 percent were sold as industrial (professional use) products. None were marketed specifically for sale in the BAAQMD in order to comply with the BAAQMD's aerosol paint rule.

Product Formulation:

Generally, floral sprays are nitrocellulose lacquer systems having low solids and fast dry characteristics that allow the flowers to "breathe" after application (Hydrosol, 10/12/93). The solvents used in floral spray formulations also help to provide the desired spray characteristics such as low viscosity and good atomization. These solvents include acetone, isobutyl acetate, alcohol, xylene, and ethyl acetate (Design Master Color Tool, 2/28/91; Floralife, 11/19/92). Some formulations also contain aluminum flake to produce a metallic shade. Generally, the type of propellants used are propane and butane. No water-borne products were identified in the ARB Aerosol Paint Survey.

According to the ARB Aerosol Paint Survey, the sales-weighted average VOC content was a very high 94 percent, with a minimum VOC content of 91 percent, and a maximum VOC content of 94 percent. The sales-weighted average solids content was 6 percent, the lowest of any aerosol paint category. The range in solids content was also very narrow, with a minimum solids content of 6 percent, and a maximum solids content of 9 percent. The survey also showed no products in this category contained 1,1,1-trichloroethane or methylene chloride.

Proposed VOC Standard:

The proposed VOC limit for floral spray coatings is 95 percent VOC by weight, consistent with the standard proposed in the Bay Area Air Quality Management District's

aerosol paint rule. This standard is much higher than the standard for general use flat or nonflat coatings because a very low solids level is necessary in these products to allow the flowers to breath. Alternative lower VOC technology was not identified in the ARB Aerosol Paint Survey for this category of products.

Based on the ARB Aerosol Paint Survey, all the reported products comply with the suggested VOC limit. Therefore, the proposed limit will place a cap on the emissions from these products, rather than to achieve emission reductions. However, emission reduction will be achieved when the 1999 standards become effective.

**REFERENCES**

Design Master Color Tool, Inc., Material Safety Data Sheet, Design Master Floral-3, February 28, 1991.

Floralife, Inc., Material Safety Data Sheet, Perfect Tint Color Collection, Touch O Blue, November 19, 1992.

Hydrosol, Inc., Telephone conversation with ARB staff, October 12, 1993.

## O. GLASS COATINGS

Proposed VOC Standard (1996): 95.0%

Product Description:

A glass coating is a coating labeled exclusively as such, which is applied to glass or other transparent material, to create a soft, translucent light effect, or to create a tinted or darkened color while retaining transparency. Products in this category are generally identified by their labels as "frosted glass finish," "glass frosting," and "window tint." It should be noted that the definition for glass coatings in the Bay Area Air Quality Management District's aerosol paint rule applies only to window tint sprays.

Glass coating sprays can be versatile in the type of lighting effect they produce. For example, frosting sprays create a soft filtered light effect on glass and other transparent material that allows light in, but yet obscures vision. This can help to provide privacy as well as to deter intrusion. With a stencil design, glass frosting sprays can create a sandblast effect (Zynolyte, 5/93). Frosting sprays can be used to reduce glare from a variety of surfaces used for photography. On the other side of the spectrum, window tint sprays help to reduce glare and eye strain by reducing the amount of light passing through clear material. They also help to reduce the amount of incident sun rays into automobiles and homes thus reducing damage on interior surfaces and reducing the "greenhouse" effect.

The glass spray coating category is one of the smaller aerosol paint categories in terms of both sales and emissions. As shown in the table below, sales of glass spray coatings account for 6,800 pounds or less than 1 percent of the total aerosol paint sales in California in 1992. These products also make up a small segment of the aerosol paints emissions, producing about 5,700 pounds of VOC emissions or less than 1 percent of the total reported emissions in California in 1992.

**Table IV-15**
**Glass Spray Coatings**
**Summary of Estimated 1992 Emissions and Sales**

| Number of Products | Total Category Sales (Lbs/Yr) | Market Share (%) | Emissions (Lbs/Yr) | Emissions (% of total) |
|---|---|---|---|---|
| 5 | 6,800 | < 1.0% | 5,700 | < 1.0% |

Source: Battelle Report, 1994.

Product Use:

Glass coating sprays are used by such professionals as television and film production technicians, set shop technicians, scenic artists, building contractors and remodelers, gardeners, photographers, film developers, car and boat dealers, and building contractors. Home artists, remodelers, and automotive detailers also use these products.

Glass coatings can be applied on essentially any type of transparent material. Frosting sprays can be applied on windows, lamps, sky-lights, partitions, table tops, greenhouses, bulbs, shower doors, mirrors, glassware, etc. (Mann Brothers, 4/93). They can also be used on photographic objects and stage props to prevent glare (Krylon, 1992). Window tint sprays can be applied on doors, windows, and video screens to reduce glare and brightness.

The application of a frosted glass coating spray is fairly straightforward. The application procedure is similar to that described for flat spray coatings. For window tint sprays, the same procedure above can be followed except that the base of the window should be covered with at least 10 thicknesses of newspaper to prevent any overflow and the can should be held approximately 8 inches from the surface. In addition, one manufacturer recomments that automotive windows tinted with these coatings should not be rolled down for 24 hours or cleaned for 36 hours after spraying (Dupli-Color, Window Tint).

Product Marketing:

Glass coatings are sold by home supply stores, discount department stores, car dealers, recreational and utility trailer dealers, automotive paint and supply stores, and home and automotive supply catalogs.

According to the ARB Aerosol Paint Survey, the following 5 manufacturers make glass coatings:

| | |
|---|---|
| **Duncan Enterprises*** | **Mann Brothers** |
| Dupli-Color Products Company | **Zynolyte Products Company*** |
| Krylon | |

The manufacturers that are highlighted in **bold**, identified themselves as manufacturers headquartered in California in the ARB Aerosol Paint Survey. In addition, two manufacturers identified themselves as small businesses in the survey. They are denoted with an asterisk (*).

According to the ARB Aerosol Paint Survey, 51 percent of the glass coatings identified in the survey were sold as household products, with 49 percent sold as both industrial and household products. None were marketed specifically for sale in the BAAQMD in order to comply with the BAAQMD's aerosol paint rule.

Product Formulation:

All of the glass coatings identified in the ARB Aerosol Paint Survey were solvent-borne products. One type of resin used in these products is a thermoplastic acrylic resin (Mann Brothers, 3/31/94). According to another manufacturer, drying oil-modified alkyd resins are also used in glass coatings. The advantages of using these types of resins are reportedly good exterior durability, and quick dry time. In the particular case of thermoplastic resins, they are used because they have very good resistance to water and ultraviolet rays (Mann Brothers, 3/31/94). Calcium silicate may be used due to its good flatting ability to reduce gloss. Aluminum silicate may be used to impart some toughness to the coating. The general types of solvents used in glass coatings are aromatic, aliphatic, and halogenated hydrocarbons (Zynolyte (Major Paint), 11/3/92). Window tint sprays may use solvents such as acetone, toluol, and Naphtha (Dupli-Color, 1/13/87). Typical types of propellants used are propane and isobutane. However, one glass frosting formulation uses dimethyl ether as a propellant (Zynolyte (Major Paint), 11/3/92).

According to the ARB Aerosol Paint Survey, the sales-weighted average VOC content of glass coatings was 85 percent, with a minimum VOC content of 69 percent, and a maximum VOC content was 95 percent. The survey also showed the sales-weighted average percent VOC solvent to be 53 percent. The sales-weighted average percent propellant was the highest of all the major aerosol paint categories at 32 percent (Battelle, 1994). The survey also showed that the sales-weighted average solids content was a very low 8 percent by weight. Products containing 1,1,1-trichloroethane (TCA) emitted 500 pounds of TCA. No products in this category were reported to contain methylene chloride.

Proposed VOC Standard:

The proposed VOC limit for glass coatings is 95 percent VOC by weight, consistent with the Bay Area Air Quality Management District's (BAAQMD) aerosol paint rule. This standard is designed to place a cap on the emissions from these products, rather than to achieve emission reductions. However, emission reduction may be achieved when the 1999 standards become effective.

A high solvent content is reportedly needed to provide the low viscosity necessary for good atomization of the resins used in these products. Thermoplastic acrylic resins used in some formulations are a high molecular weight species (essentially a plasticized lacquer) and need a considerable amount of solvent to spray well (Mann Brothers, 3/31/94). Similarly, the other types of resins used also need a considerable amount of solvent to spray effectively.

Based on the ARB Aerosol Paint Survey, 3 complying products were sold in 1992, excluding products with exempt compounds. The three complying products are marketed by the following three companies: Dupli-Color Products Company, Krylon, and Mann Brothers. These products contributed an estimated 4,700 pounds or 69 percent of the sales in California in 1992. This percentage indicates that the complying coatings are widely available. In the BAAQMD, glass coatings have been required to meet a 95 percent VOC limit since August 1991. Of the three complying coatings being sold in California, none are being sold exclusively in the Bay Area. This indicates that the complying products are being sold statewide, and compete with products above the proposed 95 percent VOC standard.

**REFERENCES**

Air Resources Board Aerosol Paint Survey, February 25, 1993.

Battelle Memorial Institute, Survey of Emissions from Solvent Use-Volume I: Aerosol Paints, Prepared for California Air Resources Board, Contract A132-085, September 16, 1994.

Dupli-Color Products, Material Safety Data Sheet, WT-212 Smoke Window Tint Aerosol, January 13, 1987.

Dupli-Color Products, Product Label, Window Tint.

Krylon, Product Label, Color Works Frosted Glass Finish, 1992.

Mann Brothers, Product Label, Glass Frosting Spray, April 1993.

Mann Brothers, Written Correspondence to ARB staff, March 31, 1994.

Zynolyte Products Company (Major Paint Company), Material Safety Data Sheet, November 3, 1992.

Zynolyte Products Company, Product Label, Glass Frosting, May 1993.

## P. GROUND TRAFFIC MARKING PAINT

Proposed VOC Standard (1996): 66.0%

Product Description:

Ground traffic marking paints are used to apply striping or marking to outdoor surfaces, including streets, golf courses, parking lots, athletic fields, construction sites, and others. Paints included in this category are labeled as "traffic paints, marking paints, athletic paints, marking chalk" and similar terms (Plasti-kote 3/89; Sprayon 5/93; Aervoe 4/92; Krylon). The individual names refer to the types of applications for which the product was designed. As an example, traffic paint is designed to give long-lasting marking of traffic lanes or parking lots, whereas athletic paint is primarily used for more temporary use at recreational sites such as golf courses or soccer fields. All of these paints are commonly referred to as "upside-down" paints because they are applied in an inverted spray position. Unlike "regular" spray paints, upside down spray paints do not have a dip tube. Lack of a dip tube allows for the inverted spray position. All upside-down paints can be applied either by hand or with a striping machine, a simple pushing device that allows accurate striping of surfaces and has an adjustable spray width. Traffic and other marking paints come in many different colors, including fluorescent colors, and are available as water- and solvent-borne formulations.

Ground traffic marking paints are the seventh largest aerosol paint category representing 4 percent of the entire aerosol spray paint market with sales of approximately 634,000 pounds per year. Estimated emissions from this category are 369,000 pounds of VOC per year, or 3 percent of the total VOC emissions from aerosol paints. About 300,000 pounds (48%) of ground traffic marking paints sold are water-borne formulations.

**Table IV-16**
**Ground Traffic Marking Paint**
**Summary of Estimated 1992 Emissions and Sales**

| Number of Products | Total Category Sales (Lbs/Yr) | Market Share (%) | Emissions (Lbs/Yr) | Emissions (% of total) |
|---|---|---|---|---|
| 38 | 634,000 | 4.0% | 369,000 | 3.0% |

Source: Battelle Report, 1994.

Product Use:

Ground traffic marking paints are used by utility locators, forestry workers, landscapers, contractors, surveyors, and others whose work requires marking of surfaces or objects. Upside-down paints can be applied to a variety of surfaces including asphalt, concrete, steel, grass, soil, wood and other surfaces. Depending upon the purpose of the marking and the type of surface, the applicator needs to choose a suitable upside-down paint. For example, applying traffic striping on high traffic concrete or asphalt streets requires a paint that withstands the wear from tires, rain, sun, and other environmental factors for a considerable period of time. The striping of a soccer field, on the other hand, may only need to last several weeks or months and should be formulated to not harm the grass or turf upon which it is applied. Generally speaking, paints marked as traffic paints are for more permanent applications whereas marking and athletic stripe paints or chalks are chosen for more temporary jobs, such as the marking of power cables or gas lines at a construction side or the outlines of a landscape design (Sprayon, 5/93; Aervoe, 4/92; Plasti-kote, 2/16/94). Although they are typically used for less permanent markings, athletic and marking paints often have to withstand environmental factors such as rain and sun for several months.

Product Marketing:

Ground traffic and marking paints are sold in hardware stores to the general public or in specialty stores to contractors, surveyors, landscapers, and other professionals. Based on the ARB Aerosol Paint Survey, the majority of ground traffic and marking paints (68%) are sold for industrial use; with 17 percent sold for consumer uses, and 15 percent sold for both consumer and industrial use.

The following 14 manufacturers reported in the ARB Aerosol Paint Survey that they sell these coatings in California:

| | |
|---|---|
| Ace Products | Revere Products* |
| Aervoe Pacific Company* | Rudd Company* |
| DAP Inc.* | Rust-oleum Corporation |
| Drummond American Corporation | Seymour of Sycamore |
| **Dunn Edwards Corporation** | Sprayon |
| Krylon/Dupli-color Products | State Chemical Manufacturing Company |
| Plasti-kote, Inc.* | Valspar Corporation |

Companies listed above that are shown in **bold** are located in California, while companies that identified themselves as small businesses in the ARB Aerosol Paint Survey have an asterisk (*) by their name.

Product Formulation:

Ground traffic marking paints are available as solvent-borne and water-borne formulations, and as fluorescent and nonfluorescent paints. For a description of fluorescent paints, please refer to the "fluorescent paint" category in this chapter. Ground traffic marking paints are typically high in solids, ranging from 16 to 45 percent by weight, with a sales weighted average of 23 percent by weight for water-borne paints and 37 percent by weight for solvent-borne paints (ARB Survey).

Solvent-borne formulations often contain alkyd or acrylic resins and aliphatic, aromatic, and oxygenated solvents. The VOC content of solvent-borne striping paints ranges from 54 to 76 percent by weight (Sprayon, 5/93; Aervoe, 4/92; ARB Survey). Hydrocarbon propellants are used between 18 to 25 percent by weight (ARB Survey).

Water-borne traffic and marking paint can be formulated in two different ways, i.e., emulsions and "true" water-miscible formulations. Emulsions are formulations wherein substances that normally are immiscible with each other form a suspension with the help of emulsifiers (detergents). Emulsified water-borne formulations use hydrocarbon propellants (Sprayon, 5/93; Krylon; Seymour). Alternatively, a formulator can make a water-borne formulation using solvents and propellants that are water miscible. In these formulations, dimethylether is used as a propellant, which is compatible with water and polar solvents, resulting in a single phase paint formulation (Aervoe, 4/92). The water content of water-borne traffic and marking paints ranges between 12 and 34 percent by weight according to the ARB Aerosol Paint Survey.

Resins commonly used in water-borne systems include alkyds and acrylics, and solvents include aliphatics, aromatics, and alcohols (Sprayon, 5/93; Aervoe, 4/92). The VOC content in water-borne systems ranges from 45 to 62 percent by weight (Sprayon, 5/93; ARB Survey). Products containing methylene chloride emitted 1,600 pounds of this exempt compound in 1992. None of the products in the survey emitted 1,1,1-trichloroethane. Propellant in water-borne paints constitutes between 15 to 29 percent by weight (ARB Survey).

Marking chalk is also considered a temporary marking "paint." Solvent-borne chalks contain aliphatic, aromatic, and other solvents and have a VOC content ranging from 63 to 66 percent (Sprayon, 5/93). Water-borne chalks have a VOC content of less than 46 percent (Aervoe, 6/93). The "chalk" in chalks is typically a clay or calcium carbonate (Sprayon, 5/93; Aervoe, 2/14/94).

Proposed VOC Standard:

The proposed VOC standard for this category is 66 percent by weight, which is consistent with the BAAQMD's aerosol paint rule. According to the ARB Aerosol Paint Survey, 32 products out of 38 reported currently are at or below the proposed limit. This

represents 86 percent (lbs sold in CA) of the market share. Considering the high numbers of complying products, the proposed standard essentially limits VOC emissions to their current levels. However, emission reductions are expected when the 1999 VOC standards become effective.

**REFERENCES**


Aervoe Pacific Company, Product Data Sheet, April 1992.

Aervoe Pacific Company, Product Data Sheet, June 1993.

Aervoe Pacific Company, Telephone conversation with ARB staff, February 14, 1994.

Air Resources Board Aerosol Paint Survey, February 25, 1993.

Battelle Memorial Institute, Survey of Emissions from Solvent Use-Volume I: Aerosol Paints, Prepared for California Air Resources Board, Contract A132-085, September 16, 1994.

Krylon, Product label.

Plasti-kote, Telephone conversation with ARB staff, February 16, 1994.

Plasti-kote, Product literature, Inverted Paint Marking System, March 1989.

Seymour of Sycamore, Telephone conversation with ARB staff, February 15, 1994.

Sprayon, Material Safety Data Sheets, May 1993.


## Q. HIGH TEMPERATURE COATINGS

Proposed VOC Standard (1996): 80.0%

Product Description:

High temperature coatings are used to coat objects that reach high temperatures (in excess of 400° F) during operation. This includes consumer items such as wood stoves, gas stoves, barbecues, bakeware, automobile exhaust systems, and industrial appliances such as boiler doors, steam pipes, baking ovens, and casting and foundry equipment. The most

common color of high heat paint sold is black (Abate, 1993), but colors such as white, aluminum, beige, brown, red, and others are available (Forrest Paint; Seymour, 4/92; DAP; VHT, product label). In real life applications, high heat coatings must withstand repeated heating and cooling without the loss of color or adhesion.

High temperature coatings are the ninth largest category within the aerosol paints, representing 2 percent of the entire aerosol spray paint market in California and also constituting 2 percent of the VOC emissions in the aerosol paint category.

**Table IV-17**
**High Temperature Coatings**
**Summary of Estimated 1992 Emissions and Sales**

| Number of Products | Total Category Sales (Lbs/Yr) | Market Share (%) | Emissions (Lbs/Yr) | Emissions (% of total) |
|---|---|---|---|---|
| 29 | 383,000 | 2.0% | 313,000 | 2.0% |

Source: Battelle Report, 1994.

Product Use:

High temperature coatings are used in industrial and home settings. Industrial applications include painting of steam pipes, furnaces, boilers, heat ducts and several others (Krylon, Seymour, 3/9/94 and 4/92). Many heat resistant coatings require a cure at elevated temperatures to achieve optimum film properties (Finzel, 1987). Manufacturers typically include curing directions on the can label. Consumers or "home users" may use these coatings to paint or touch-up stoves, barbecues, or automotive parts such as exhaust headers. Automotive use of high heat paints is primarily carried out by car enthusiasts and is not done by automobile manufacturers because of costs (Hedman Header, 3/25/94; VHT, 3/28/94). In many cases exhaust headers are electro plated rather than spray painted to prolong longevity of the coating (Racing Products Warehouse, 3/28/94).

Typical high temperature coatings for industrial and consumer purposes can be used for temperatures ranging from 250° to 1400° F (Finzel, 2/94). Most applications for high heat paints do not exceed 700° F. Average temperatures for gas stoves and barbecues reach temperatures between 300° to 450° F, whereas wood stoves range from 400° to 600° F (Energy Unlimited, 3/9/94; A & G Supply, 3/8/94; Custom Fireside, 3/8/94). Higher temperatures can be reached with exhaust manifolds and headers, reaching 900° F or more (Hedman Headers, 3/8/94; Air Resources Board, Mobile Source Division, 3/8/94; VHT, 3/28/94).

Prior to application, surfaces must be free of rust, dirt, scale, grease, and oil (Sprayon 1/94 and 3/92; Krylon). Primers or passivation treatments should not be used in conjunction with high heat paints. Additional coatings between the high heat paint and the metal surface

interfere with the direct bonding between the silicone resin and the metal surface. The establishment of a direct bond between the high heat coating and the metal surface is essential for optimal performance of the coating. Therefore primers or other coatings will decrease the performance of the high heat coating (BMC, 4/5/94; Seymour of Sycamore, 3/9/94).

Product Marketing:

High temperature coatings are sold in hardware stores, fireplace and wood-stove retail stores, automotive supply stores, major chain stores, and by industrial suppliers. According to the ARB Aerosol Paint Survey, 44 percent of all high temperature paint was sold for home use. About 54 percent were sold to both home and industrial use. Only 2 percent were marked exclusively as industrial use. About 7 percent of all high temperature paint reportedly was sold exclusively in the Bay Area.

The following 14 manufacturers reported selling these coatings in California:

| | |
|---|---|
| ACE Products | Rust-oleum |
| Aervoe Pacific* | Seymour of Sycamore |
| DAP Inc.* | Sherwin Williams |
| Forrest Paint* | Sprayon |
| K-Mart | Tru-Test Manufacturing |
| Krylon | United Coatings Inc. |
| Plasti-kote* | **Zynolyte Products** |

Companies listed above that are shown in **bold** are located in California, while companies that identified themselves as small businesses in the ARB Aerosol Paint Survey have an asterisk (*) by their name.

Product Formulation:

Like most aerosol spray paints, high heat coatings consist of the basic components such as resin, solvent, pigment, additives, and propellant. The ARB Aerosol Paint Survey showed that the VOC content of high heat paints that do not contain exempt solvents ranges from as low as 71 percent to as high as 94 percent. The ARB Aerosol Paint Survey identified less than 3 products that contained exempt solvents (TCA). In these products, the exempt solvent is used at about 20 percent by weight (ARB Survey), and represents about 17 percent of the market share. Typical solvents other than exempt solvents used in high heat paints are acetone, toluene, xylene, aliphatic hydrocarbons and others (Sprayon 1/94; Krylon 3/92). The solids content reported to the ARB ranges from as low as 6 percent by weight to as high as 29 percent by weight. All high heat paints that were reported in the ARB Aerosol Paint Survey are solvent-borne and reported using hydrocarbon propellants ranging from 15 to 31 percent by weight.

To achieve heat resistance, high temperature coatings must contain silicone resins. Silicone resins contain an inorganic silicone - oxygen backbone (siloxane) to which organic molecules are attached. It is the siloxane backbone that provides the heat resistance, and, generally speaking, the higher the siloxane content the higher the heat resistance achieved (Abate, 1993). The organic groups attached to the siloxane backbone are most commonly methyl and phenyl groups (Abate 1993; Brown, 1972). Phenyl and methyl groups confer different characteristics to the siloxane backbone. Generally speaking, phenyl groups confer more heat resistance whereas methyl groups promote the cure rate of the resin (Finzel 1994; Abate, 1993; Finzel, 1987). Quite often, a mix of methyl and phenyl groups is used. Some high heat paints use silicones modified with alkyds, acrylics, or polyesters, although the majority of high performance high heat paints uses primarily polyphenyl- or polymethyl siloxanes (BMC Industries, 4/5/94). Pigments used in heat resistant paints are often metallics such as iron oxides for black paints or ceramic pigments for colored paints (Abate, 1993). Metal and ceramic pigments will enhance heat resistance. Organic pigments such as carbon black are generally not able to withstand high temperatures (BMC Industries, 3/7/94).

Several silicone containing formulations with varying temperature ranges are available. Silicone modified organic resins (acrylics, alkyds, or polyesters) contain small amounts of silicone (15-50 percent) and can tolerate temperatures up to 400° F. The temperature range of these coatings can be extended to about 500° F by the addition of metals such as aluminum. Organic modified silicones that contain 50 percent silicone or more can achieve temperature resistance up to 700° F depending upon the pigment used. Coatings based on 100 percent silicone resin (siloxane with phenyl and/or methyl groups) provide the best heat resistance and when combined with ceramic or metallic pigments these paints will withstand repeated or prolonged exposure up to 1200° F (Finzel, 1987). As with many other technologies, the space program lead to an advance of silicone coating technology, developing a formulation that can withstand heat up to 2500° F (Finzel, 1987).

The high temperature performance of silicone resins is based on the formation of an inorganic matrix during the heating process which links together silicone, oxygen, pigment, and extenders, resulting in a glass like coating (Abate, 1993; BMC Industries, 3/7/9; Finzel, 1987). As the temperature approaches 250° C (about 482° F), organic decomposition commences and carbon bonds start breaking, thereby releasing the organic groups (Seymour, 3/9/94; BMC, 3/7/94). It is possible that small amounts of by-products are formed during this decomposition process such as formaldehyde from methyl groups and benzaldehyde from phenyl groups (BMC Industries, 3/7/94; Dow Corning Corporation, 3/4/94; GE Silicones, 3/4/94). Once fully cured, an inorganic silicone-oxygen matrix is left and no organic molecules will be released during subsequent heating periods. We are not aware of any published quantitative or qualitative measurements conducted so far that determine the extent and required conditions that can lead to the formation of decomposition by-products from high temperature paints. Despite the lack of published data that document the formation of organic by-products from heat resistant paints, some raw material suppliers have put precautionary labels on their resins stating that "this product contains methylpolysiloxanes which can generate formaldehyde at approximately 300° F and above in atmospheres which

contain oxygen" (GE Silicones, 3/4/94; Forrest Paint, 3/2/94). GE Silicones followed the guidelines from the Occupational Health and Safety Administration (OSHA) that requested a warning label for all materials where the potential for formaldehyde generation exists (29 Federal Register 1910.1048) (GE Silicones, 3/3/94 and 3/4/94).

High temperature coatings may contain a "drying resin" that prevents surfaces of painted objects from remaining tacky (BMC, 3/21/94). This is mainly important for items that are coated at the manufacturing site but are not cured until they reach their final destination such as the customer's home where they are subsequently exposed to high temperatures suitable for curing of the resin.

Proposed VOC Standard:

The proposed VOC standard for high temperature coatings is 80 percent by weight. This limit has been in effect in the Bay Area since August 1991 and is technologically and commercially feasible.

According to the ARB Aerosol Paint Survey, 11 out of 29 products meet this proposed standard, representing about 25 percent of the 1992 high temperature paint sales. Of these paints, at least 4 products are designed to withstand ultra high heat of 1000° F or more. In addition, one manufacturer, who did not participate in the ARB Aerosol Paint Survey, reported the production of a complying high heat coating designed for use on automobile headers and other high heat applications up to 1200° F (VHT, 3/28/94). The following manufacturers sell high heat paints at 80 percent VOC or less in California: Aervoe Pacific, DAP Inc., Plasti-kote, Rust-oleum Corporation, Seymour of Sycamore, Sprayon/Dupli-Color, United Coatings, and Zynolyte Products Company.

We expect that manufacturers whose products currently do not meet the proposed standard will reformulate high temperature aerosol paints by using techniques employed by manufacturers who have already reformulated to meet the 80 percent VOC limit. For example, some manufacturers have reduced the VOC content by increasing the solids content of the formulation. As described in Chapter V, increasing the solids content typically requires other changes in formulation. For example, polymethyl siloxane resins, which are lower in viscosity, may replace higher viscosity resins such as polyphenyl siloxanes (BMC, 4/5/94). Manufacturers were generally very pleased with their complying products and said that these products (which are below 80 percent VOC) are comparable to higher VOC containing products (VHT, 3/28/94; Seymour, 3/9/94; Rust-oleum, 3/3/94).

**REFERENCES**

A & G Supply, Telephone conversation with ARB staff, March 8, 1994.

Abate, K., 1993, "Silicone resin emulsions for high temperature coatings," Modern Paint and Coating, pp. 62-67.

Air Resources Board Aerosol Paint Survey, February 25, 1993.

Air Resources Board, Mobile Source Division, Telephone conversation with ARB staff, March 8, 1994.

Battelle Memorial Institute, Survey of Emissions from Solvent Use-Volume I: Aerosol Paints, Prepared for California Air Resources Board, Contract A132-085, September 16, 1994.

BMC Industries, Telephone conversation with ARB staff, March 7, 1994.

BMC Industries, Telephone conversation with ARB staff, March 21, 1994.

BMC Industries, Letter to ARB staff, April 5, 1994.

Brown, L. H., 1972, " Silicones in protective coatings," Treatise on Coatings, 1972, pp. 513-563.

Custom Fireside, Telephone conversation with ARB staff, March 8, 1994.

DAP Inc., Product label.

Dow Corning Corporation, Telephone conversation with ARB staff, March 4, 1994.

Energy Unlimited, Telephone conversation with ARB staff, March 9, 1994.

Finzel, W. A., "Silicone resins meet environmental initiatives without sacrificing quality," Paint & Coatings Industry, February 1994, pp. 39-40.

Finzel, W. A., 1987, "Properties of high temperature silicone coatings," Protective Coatings & Linings, pp. 38-43.

Forrest Paint, Facsimile sent to ARB staff, March 2, 1994.

GE Silicones, Telephone conversation with ARB staff, March 4, 1994.

GE Silicones, Telephone conversation with ARB staff, March 3, 1994.

Hedman Headers, Telephone conversation with ARB staff, March 8, 1994.

Krylon, Product Label.

Racing Products Warehouse, Telephone conversation with ARB staff, March 28, 1994.

Rust-oleum, Telephone conversation with ARB staff, March 3, 1994.

Seymour of Sycamore, Telephone conversation with ARB staff, March 9, 1994.

Seymour of Sycamore, Product literature, "Seymour E Series," April 1992.

Sprayon, Material Safety Data Sheet, March 1992 and January 1994.

VHT, Telephone conversation with ARB staff, March 28, 1994.

VHT, Product Label.

## R. HOBBY/MODEL/CRAFT COATINGS (Enamel, Lacquer, and Clear, Metallic)

Proposed VOC Standards (1996): Enamels 80.0%
Lacquers 88.0%
Clear or Metallic 95.0%

Product Description:

Hobby/model/craft (H/M/C) coatings are aerosol paints designed and labeled for hobby applications, including the painting of model cars, boats, or airplanes, and a variety of other specialized hobby and craft uses. These products, as defined in the proposed regulation, are sold in aerosol containers of 6 ounces or less. In this category, three types of H/M/C coatings with individual proposed VOC limits are described: enamels, lacquers, and clear or metallic coatings.

As mentioned above, H/M/C coatings are limited to six ounces by weight in the proposed regulation. This restriction is included in the definition of these products for several reasons. First, this requirement is consistent with the fact that most of these coatings are already sold in small containers. According to the National Paint and Coatings Association (NPCA), 95 percent of the H/M/C coatings marketed by their members are sold in 3 ounce containers, with only a nominal figure marketed in 4, 5, or 6 ounce cans (NPCA, 3/29/94). Secondly, these products are generally used for small hobby or craft applications such as painting plastic models. Finally, since the VOC limits for H/M/C coatings are much higher than the limits for general use coatings (flats, non-flats, clears and metallics) some manufacturers may attempt to relabel their products to fall under the H/M/C category rather than reformulating their products. While this is a concern for any category of products with a high-VOC limit, it is a particular concern for the H/M/C category because of the narrow distinction between a hobby or craft product and a general use product. This concern has also been expressed by manufacturers of H/M/C coatings (NPCA, 3/29/94).

Enamels

The enamel H/M/C coatings cure by cross-linking of their base resin. The enamel H/M/C coatings category accounts for approximately 22 percent of the H/M/C market. However, it is a small percentage of the total aerosol paint market. According to the ARB Aerosol Paint Survey, sales of these products were 131,500 pounds or less than 1 percent of the total aerosol paint market in California in 1992. Similarly, the VOC emissions were less than 1 percent of the total reported emissions in California at 101,800 pounds.

Lacquers

Lacquer H/M/C coatings, like other lacquer coatings, utilize thermoplastic film-forming material dissolved in organic solvent, which dries primarily by solvent evaporation, and hence is resoluble in its original solvent. The lacquer H/M/C category is a minor segment of the general H/M/C category, representing only 3 percent of the sales. As such, it is also a minor segment of the total aerosol paint market and emissions. Based on the ARB Aerosol Paint Survey, lacquer H/M/C spray coatings accounted for 19,200 pounds or less than 1 percent of the total aerosol paint sales in California in 1992. Similarly, these products also made up a small segment of the aerosol paints emissions, at 16,300 pounds of VOC emissions or less than 1 percent of the total reported emissions in California in 1992.

Clear or Metallics

Clear or metallic H/M/C spray coatings are H/M/C coatings which meet the definitions for clear coatings or metallic coatings as defined in the proposed aerosol paint regulation. Specifically, clear H/M/C coatings are colorless coatings, containing binders but no pigments, except flatting agents, and which are formulated to form a transparent or translucent solid film. On the other hand, metallic H/M/C spray coatings are topcoats which contains at least 1 percent elemental metallic pigment and is labeled as "metallic," or with the name of a specific metallic finish such as "gold," "silver," or "bronze."

The clear or metallic H/M/C coatings category accounts for 75 percent of the total hobby/model/craft category. This category is also a significant (but much smaller) segment of the total aerosol paint market and emissions. As shown in the table below, sales of clear or metallic H/M/C coatings accounted for 461,600 pounds or 2.6 percent of the total aerosol paint sales in California in 1992. These products also make up a significant percentage of aerosol paint emissions producing 409,500 pounds of VOC emissions or 3.0 percent of the total reported emissions in California in 1992.

An emissions summary of the hobby/model/craft coatings is shown below.

**Table IV-18**
**Hobby/Model/Craft Coatings**
**Summary of Estimated 1992 Emissions and Sales**

| | Number of Products | Total Category Sales (Lbs/Yr) | Market Share (%) | Emissions (Lbs/Yr) | Emissions (% of total) |
|---|---|---|---|---|---|
| Enamels | 167 | 131,500 | < 1.0% | 101,800 | < 1.0% |
| Lacquers | 26 | 19,200 | < 1.0% | 16,300 | < 1.0% |
| Clear or Metallic | 63 | 461,600 | 2.6% | 409,500 | 3.0% |

Source: Battelle Report, 1994.

Product Use:

Hobby/model/craft spray coatings may be used by home and professional artists, crafts people, hobbyists, modelers, and decorators. The enamel, clear, and metallic sprays may be used on such items as models, crafts, figures, ceramic, fabric, wax, wood, metal, stone, glass, leather, paper, styrofoam, plastics, and for touch-up purposes (Testor, Product Label, No. 1203 Gloss Red Spray Enamel). Some sprays may not be suitable for polyethylene or vinyl plastics; therefore, manufacturers recommend a test spray patch should always be applied on an inconspicuous area before actual use. Lacquer sprays can be applied on surfaces such as wood, primed or painted metal, and most hard plastics.

Before applying on any surface, the surrounding areas should be protected from overspray, by newspapers, paper towels, and drop cloths. The application procedure is similar to that described for flat aerosol paints.

Product Marketing:

Establishments which sell hobby/model/craft spray coatings include mail-order houses, art, craft, hobby, model construction, and decorating supply stores. Some department, discount department, and discount retailers may also sell hobby/model/craft spray coatings.

Enamels

According to the ARB Aerosol Paint Survey, the following 6 companies manufacture or market enamel sprays:

| | |
|---|---|
| Floquil-Polly S Color Corp.* | Testor Corp./Pactra Inc.* |
| Marson Corporation* | Thompson Formby Inc.* |
| Plasti-kote Company Inc.* | **Zynolyte Products Co.** |

Of these manufacturers, only Zynolyte Products Company, highlighted in **bold**, is a California based company. Five companies identified themselves as small businesses in the ARB Aerosol Paint Survey. These companies are denoted with an asterisk (*).

According to the ARB Aerosol Paint Survey, over 99 percent of the products sold in this category were sold as household products, with less than 1 percent sold as both industrial (professional) and household products. None were marketed specifically for sale in the BAAQMD.

Lacquers

The following 6 companies manufacture or market lacquer sprays:

| | |
|---|---|
| DAP Inc.* | Thompson Formby Inc.* |
| Plasti-kote Company Inc.* | Tru-Test Manufacturing Company |
| Testor Corp./Pactra Inc.* | **Zynolyte Products Co.** |

Of these manufacturers, only Zynolyte Products Company, highlighted in **bold**, is a California based company. Four companies identified themselves as small businesses in the ARB Aerosol Paint Survey. These companies are denoted with an asterisk (*).

According to the ARB Aerosol Paint Survey, 97 percent of the products in this category were sold as household products, with only 3 percent sold as both industrial (professional) and household products. Of these, none were marketed specifically for sale in the BAAQMD.

Clear or Metallics

The following 4 companies manufacture or market clear or metallic H/M/C aerosol paints:

| | |
|---|---|
| Krylon/Dupli-Color Products | Testor Corp./Pactra Inc.* |
| Plasti-kote Company Inc.* | **Zynolyte Products Co.** |

Of these manufacturers, only Zynolyte Products Company, highlighted in **bold**, is a California based company. Two companies identified themselves as small businesses in the ARB Aerosol Paint Survey. These companies are denoted with an asterisk (*).

According to the ARB Aerosol Paint Survey, 44 percent were sold as household products and 56 percent were sold as both industrial and household products. Of these, none were marketed specifically for sale in the BAAQMD.

Product Formulation:

Enamels

All of the products identified in the ARB Aerosol Paint Survey in the H/M/C enamel category were solvent-borne. The types of resins used in H/M/C enamels are alkyds, such as air dry, medium-oil alkyds and vinyl-toluene modified alkyds (Floquil-Polly S Color, 3/31/94; Testor, 3/30/94). These resins help to provide gloss, good exterior durability, water resistance, and a hard film. According to one manufacturer, the range in solids may be from 12 to 25 percent, comprised of various resins, pigments and inert extenders. Based on the ARB Aerosol Paint Survey, the sales-weighted average solids content in these products was 22 percent.

The solvents used in the enamel coatings will vary depending on the type of substrate. However, in general, the solvents used are aromatic hydrocarbons, petroleum distillates, alcohols, and ketones (Floquil-Polly S Color, 1/30/92; Testor, Material Safety Data Sheet, No. 1203 Gloss Red Spray Enamel, 5/19/92; Zynolyte, 10/2/91). The typical propellants used are propane and isobutane.

According to the ARB Aerosol Paint Survey, the sales-weighted average VOC content of these products was 77 percent, with a range from 58 percent to 90 percent by weight. The survey also showed that the sales-weighted average percent VOC solvent and propellant was 52 percent and 26 percent, respectively. Products containing 1,1,1-trichloroethane (TCA) emitted TCA emissions of 1,050 pounds. No products were identified in this category which contain methylene chloride.

Lacquers

According to the ARB Aerosol Paint survey, all of the products in the H/M/C lacquer category are solvent-borne. According to one manufacturer, the typical resins used in these coatings are high molecular weight acrylic or nitrocellulose lacquer resins. These products usually have a high VOC content, in part, because more solvent is reportedly necessary to reduce the viscosity of these resins to allow for a finely atomized spray. These resins provide for a quick dry time, and can be recoated at any time. According to the ARB Aerosol Paint Survey, the sales-weighted average solids content for these products was 14 percent.

Based on the ARB Aerosol Paint Survey, the sales-weighted average VOC content of lacquer H/M/C coatings was 85 percent, with a wide range in VOC from a minimum of 63 percent, and a maximum of 94 percent. Some of the general types of solvents used may be toluene, methyl ethyl ketone, xylene, and VM&P naphtha. The general types of propellants used may be propane, isobutane, and n-butane. According to the ARB Aerosol Paint Survey, the sales-weighted average solvent and propellant content in these products was

64 percent and 21 percent, respectively. Products containing 1,1,1-trichloroethane (TCA) contributed TCA emissions of 150 pounds. No products in the survey were reported to contain methylene chloride.

Clear or Metallics

The survey showed that all the products in this category were solvent-borne formulations. Some typical resins used in these products are cellulose esters, cellulose ethers, and acrylic resins (Testor, 3/30/94). These types of resins help to provide for good gloss, durability, and the lack of discoloration on aging or exposure. According to the ARB Aerosol Paint Survey, the sales-weighted average solids content for these products was a low 9 percent. Metallic coatings may contain aluminum pigment to give the coating the "metallic" look.

According to the ARB Aerosol Paint Survey, the sales-weighted average VOC content of H/M/C clear or metallic coatings was 89 percent, with a range from 74 percent to 96 percent . Some general types of solvents used in these formulations are aromatic hydrocarbons, petroleum distillates, ketones, alcohols, acetates, and butyrates (Testor, Material Safety Data Sheet, No. 1246 Metallic Silver Spray Enamel, 5/19/92). The survey also showed the sales-weighted average percent VOC solvent and propellant to be 62 percent and 27 percent, respectively. Products containing exempt compounds contributed methylene chloride emissions of 10,500 pounds, and 1,1,1-trichloroethane emissions of less than 5 pounds.

Proposed VOC Standard:

Enamels: The proposed VOC limit for enamel H/M/C coatings is 80 percent by weight. This standard is consistent with the VOC limit currently required in the Bay Area Air Quality Management District's (BAAQMD) aerosol paint rule. This will help to simplify compliance in California by having a single VOC limit for these products throughout the state. This limit will not achieve significant emission reductions since the majority of products already comply with the proposed limit. However, emission reductions may be achieved when the 1999 standards become effective.

Manufacturers of H/M/C enamels have stated that the proposed 80 percent standard (which is much higher than the VOC limits for general use flat and nonflat coatings) is necessary to produce low-solids, finely atomized sprays that will not obscure the details on models. It was reported that high-solids coatings tend to fill any texture or detail on models or craft objects (Testor Corporation, 10/21/93; Raabe Corporation, 5/24/93). As stated previously, no water-borne products were identified in this category in the ARB Aerosol Paint Survey.

At the proposed 80 percent limit, the ARB Aerosol Paint Survey shows that there are 145 complying enamel H/M/C products, excluding products containing exempt compounds. These products are being marketed by the following three companies: Floquil-Polly S Color

Corporation, Testor Corporation/Pactra Inc., and Thompson Formby Inc. Based on the survey, the 145 products were responsible for an estimated 68 percent of the sales in this category in California in 1992. The survey also shows that the sales-weighted average VOC content of these products is 77 percent, which is actually below the proposed 80 standard. This indicates that complying coatings are widely available. In the BAAQMD, enamel H/M/C coatings have been required to meet an 80 percent VOC limit since August 1991. Of the 145 complying coatings being sold in California, none are being exclusively sold in the Bay Area which indicates that the products at or below 80 percent VOC are sold throughout the state and compete with the higher VOC products.

Lacquers: The proposed VOC limit for lacquer H/M/C coatings is 88 percent by weight. As with enamel H/M/C coatings, this standard is consistent with the VOC limit currently required in the Bay Area Air Quality Management District's (BAAQMD) aerosol paint rule, and will help to simplify compliance in California by having a single VOC limit for these products throughout the state. This limit is designed to place a cap on the emissions from this category, rather than to achieve emission reductions. However, emission reductions may be achieved when the 1999 standards become effective.

The VOC limit proposed for lacquer H/M/C coatings is quite high for two reasons. First, like enamel H/M/C coatings, low-solids lacquer H/M/C coatings are preferred because they produce a light coating that will not obscure fine details on models and craft products. Secondly, the typical acrylic and nitrocellulose resins currently used are fairly high molecular weight species that reportedly need a high amount of solvent to reduce the viscosity and provide for good spray characteristics.

The ARB Aerosol Paint Survey indicates that there are 16 complying products in this category, excluding products with exempt compounds. These products represented an estimated 94 percent of the sales of hobby/model/craft lacquer products in California in 1992. The survey also shows that the sales-weighted average of these products is 85 percent, which is below the proposed 88 percent standard. This clearly demonstrates that the 88 percent VOC level can be met. In the BAAQMD, lacquers have been required to meet an 88 percent VOC level since August 1991. Of the 16 complying products being sold in California, none are being exclusively sold in the Bay Area which again shows that the 88 percent VOC limit is being met throughout the state. The 16 complying products are marketed by the following five companies: DAP Inc., Plasti-kote Company Inc., Testor Corporation/Pactra Inc., Thompson Formby Inc., and Tru-Test Manufacturing Company.

Clear or Metallics: The proposed VOC limit for clear or metallic H/M/C coatings is 95 percent by weight, consistent with the VOC limit currently required in the Bay Area Air Quality Management District's (BAAQMD) aerosol paint rule. This will help to simplify compliance in California by having a single VOC limit for these products throughout the state. As with the other H/M/C coatings, this standard is designed to place a cap on the emissions from this category, rather than to achieve significant emission reductions.

However, further emission reductions may be achieved when the 1999 standards become effective.

Similar to the discussion for enamel and lacquer H/M/C coatings above, these coatings reportedly need to be very thin in order to show the detail on small scale plastic model kits, including rivets, thin panel seam lines, vents, and grill lines (Testor, 10/21/93). In addition, the acrylic resins typically used in these coatings are fairly high molecular weight compounds that need a high level of VOC to maintain low viscosity in the formulation and to provide good atomization. Clear and metallic coatings require a higher VOC content than other H/M/C coatings because they contain less pigments than opaque H/M/C coatings.

According to the ARB Aerosol Paint Survey, there are 59 complying coatings in this category, excluding products with exempt compounds. The complying coatings represent 79 percent of the sales in this category. In addition, the survey shows that the sales-weighted average VOC content is 89 percent, well below the proposed standard. This clearly indicates that the 95 percent VOC level can be met. In the BAAQMD, clear or metallic coatings have been required to meet a 95 percent VOC level since August 1991. Of the 59 complying products being sold in California, none of the products are being exclusively sold in the Bay Area, indicating that the complying products are marketed throughout the state and compete with higher VOC products. The 59 complying products are being marketed by the following three companies: Krylon/Dupli-Color Products, Plasti-kote Company Inc., and Testor Corporation/Pactra Inc.

**REFERENCES**

Air Resources Board Aerosol Paint Survey, February 25, 1993.

Battelle Memorial Institute, Survey of Emissions from Solvent Use-Volume I: Aerosol Paints, Prepared for California Air Resources Board, Contract A132-085, September 16, 1994.

Floquil-Polly S Color Corporation, Material Safety Data Sheet, Floquil Aerosols-All Colors, January 30, 1992.

Floquil-Polly S Color Corporation, Written correspondence to ARB staff, March 31, 1994.

National Paint and Coatings Association, Written correspondence to ARB staff, March 29, 1994.

Raabe Corporation, Written correspondence to ARB staff, May 24, 1993.

The Testor Corporation, Material Safety Data Sheet, No. 1246 Metallic Silver Spray Enamel, May 19, 1992.

The Testor Corporation, Material Safety Data Sheet, No. 1203 Gloss Red Spray Enamel, May 19, 1992.

The Testor Corporation, Product Label, No. 1203 Gloss Red Spray Enamel.

The Testor Corporation, Written correspondence to ARB staff, October 21, 1993.

The Testor Corporation, Written correspondence to ARB staff, March 30, 1994.

Zynolyte Products Company (Major Paint Company), Material Safety Data Sheet, Midget Enamel 8005, True Yellow, October 2, 1991.

## S. MARINE SPAR VARNISH

Proposed VOC Standard (1996): 85.0%

Product Description:

Marine spar varnish aerosol coating products are clear, exterior finishes. These finishes are designed and labeled for the protection of exterior wood surfaces that are exposed to the sun's damaging ultraviolet rays. For protection from the sun's harmful rays, spar varnishes are typically formulated with ultra-violet inhibitors or absorbers. These inhibitors and absorbers are important because the harmful sun rays dry out and bleach wood causing cracking and loss of flexibility.

The name "marine spar varnish" traces back to the early days of sailing ships when the wooden mast was called a spar (Gordon, McNeill, p. 159). The mast is very important to a sailing ship because it supports the rigging system that is necessary for control of the vessel; therefore, it must retain its flexibility to prevent breakage.

Marine spar varnish coatings have good film building properties, while remaining flexible and abrasion resistant. The flexibility of these coatings is important because wood surfaces will expand and contract with the changes in weather and temperature, especially in marine environments. This property is unique to some exterior wood finishes such as marine spar varnish, as opposed to interior wood formulations which are generally more rigid. Marine spar varnishes also provide protection for the wood substrate from salt water spray and chemicals above the waterline.

According to the ARB Aerosol Paint Survey, only two companies reported selling products in the marine spar aerosol varnish category. Due to concerns about the confidentiality of the data, total sales and emissions are not reported in the following table. However, the category is one of the smaller aerosol paint categories in terms of sales and emissions, with less than 1 percent of the total sales and emissions in California.

**Table IV-19**
**Marine Spar Varnish Coatings**
**Summary of Estimated 1992 Emissions and Sales**

| Number of Products | Total Category Sales (Lbs/Yr) | Market Share (%) | Emissions (Lbs/Yr) | Emissions (% of total) |
|---|---|---|---|---|
| 5 | — | < 1.0% | — | < 1.0% |

Source: Battelle Report, 1994.

Product Use:

Although aerosol marine spar varnishes are most frequently used for boats, they can be also used for most external wood surfaces that require protection from outdoor exposure. The products in this category are also recommended for household uses on bare wood surfaces such as doors, exterior trim, wood siding, wooden furniture, deck railings, interior window trim, bar tops, sporting equipment, and fences.

As with many aerosol coatings, marine spar varnishes are not recommended for application during periods of high, excess humidity or in the direct ray of a hot sun. The optimum temperature range for application is 50° F to 85° F. It is also recommended that surfaces need to be clean of dirt and dry to provide the necessary adhesion to the substrate. Three or four coats should be applied for maximum durability and protection from exposure (Valspar, 6/92).

Product Marketing:

Marine spar varnish products are sold in paint and hardware supply stores, marine accessory shops, and some discount stores.

The following two companies have been identified as manufacturing or marketing aerosol marine spar varnish coating products in the ARB Aerosol Paint Survey: Minwax Company, Valspar. Neither of these companies are California based companies or identified themselves as small businesses in the ARB Aerosol Paint Survey.

According to the ARB Aerosol Paint Survey, 100 percent of the aerosol marine spar varnish coatings were sold only for household use by consumers. None of the products sold in California in 1992 were marketed specifically for use in the Bay Area Air Quality Management District (ARB Survey, 1993).

Product Formulation:

An early typical spar varnish utilized naturally occurring resins, like the dried sap of trees in its formulation. In the early manufacturing of varnish, it was found that these resins could be dissolved in vegetable oils to provide the needed hardness and faster drying of paints (Gordon, McNeill, pp. 23-24).

Current resins used in marine spar varnishes are manufactured from tung oil, tung oil phenolic resin, oil modified polyurethane, and alkyd resin. The tung oil is extracted from the seeds of the tung tree and the sap is extracted from the China Wood trees. Tung oil has proven to be useful for waterproofing for hundreds of years. These resins allow for tremendous flexibility as well as protection from water, weather, sun, wind, and other natural elements. Tung oil works by sealing and binding the deep wood fibers together for maximum protection and durability. A build-up of tung oil can result in a soft, low sheen (Zynolyte, Product Literature).

Typical solvents used in marine spar varnish may include stoddard-solvent or mineral spirits, isopropyl alcohol, xylene, ethylbenzene, ethylene glycol monopropylether, and petroleum solvent.

Typical propellents used for aerosol marine spar varnishes may include propane, butane, isobutane, or a blend of these chemicals, for low viscosity spraying. Resins with a low molecular weight are not used because they are more viscous and do not dry well. When a coating is not completely dried recoating problems can occur, such as wrinkling or bubbling in the film (Heath, 5/6/94).

Information received from the ARB Aerosol Paint Survey shows no water-borne aerosol marine spar varnish products sold in California in 1992. For the solvent-borne products reported in the ARB Aerosol Paint Survey, the average marine spar varnish aerosol coating product has a solids content of 16 percent, with a range from 13 to 20 percent. The survey also shows a VOC average of 84 percent, with a range of 80 to 87 percent. No products in the marine spar varnish aerosol coating category, sold in California in 1992 and reported in the ARB Aerosol Paint Survey, contained methylene chloride or 1,1,1-trichloroethane (ARB Survey, 1993).

Proposed VOC Standard:

The proposed VOC standard for marine spar varnishes is 85.0 percent by weight, below the 92 percent standard specified in the Bay Area Air Quality Management District. The proposed standard was set at 85 percent, because all of the products identified in the ARB Aerosol Paint Survey were at or near the proposed 85 percent VOC level.

Although the marine spar aerosol varnishes are considered to be clear coatings, the standard proposed is higher than that for a general clear coating due to the need for a higher VOC level to accommodate the high viscosity of the resins required for this application.

The proposed 85 percent VOC standard will not achieve significant emissions reductions. However, emission reductions will be achieved when the 1999 VOC standard is implemented.

**REFERENCES**


Air Resources Board Aerosol Paint Survey, February 25, 1993.

Battelle Memorial Institute, Survey of Emissions from Solvent-Use Volume I: Aerosol Paints, Prepared for California Air Resources Board, Contract A132-085, September 16, 1994.

Gordon Jr., John A., McNeill, Robert A., Pacific Technical Consultants, "A Condensed Comprehensive Course in Coatings Technology," Syllabus, Ram Consulting, 1992, pp. 23-24, 159.

Heath, Brian, Valspar, Telephone conversation with ARB staff, May 6, 1994.

Valspar, Material Safety Data Sheet, Product Literature, June 1992.

Zynolyte Products Company, Creative Wood Finishes, Product Literature.


## T. PHOTOGRAPH COATINGS

Proposed VOC Standard (1996): 95.0%

Product Description:

Aerosol photograph coatings are clear coatings that are sprayed on fully developed photographs to protect the image, perform "touch-up" work, prevent fingerprint marks, or change the gloss level of photographs.

Photograph coatings account for a small segment of the aerosol paint category with only three products reported in the ARB Aerosol Paint Survey and sales accounting for less than 1 percent of the aerosol paint market. Although the products tend to be very high in VOC content, they represent a minor portion of the emissions from aerosol paint products.

More detailed information on sales and emissions could not be provided in this report due to confidentiality concerns raised by one manufacturer.

Product Use:

Photograph coatings are used for a variety of different purposes by professional photographers, photography labs, and individuals. Regardless of the purpose, the aerosol products are generally sprayed on in a light coating on all or part of the photograph. These products are often used to protect photographs from damage, since photographs are susceptible to damage from ultraviolet light, moisture, and spills.

Photograph coatings are often used by professional photographers to perform artistic enhancements or touch-up work such as removing blemishes from portraits. During such enhancements, pencils, pastels, or oils are applied to the photograph after it is treated with a photograph coating. The photograph coatings used for this purpose provide a surface with enough texture or "bite" to allow touch-up work to adhere to the photograph. They also protect the photograph from tearing when touch-up work is performed. After touch up work is performed, a second or third protective coat is applied over the altered photograph.

The gloss level of a photograph may be changed by applying a photograph coating. Photograph coatings are usually available in several levels of sheen. During the development process, different gloss levels may be produced with different papers. However, it may not be convenient for some businesses to carry several different paper types.

Another use of photograph coatings is to prevent fingerprints or smudges that occur while photographs are handled, such as during trimming, touch-up, displaying, and framing. A light application with a photograph coating will prevent the oils in finger prints from damaging the photograph and will provide an even finish without smudges.

Product Marketing:

Photograph coatings are sold in camera stores, art and hobby supply stores and direct to photography labs and studios. The following two manufacturers of these products were identified in the ARB Aerosol Paint Survey: Sureguard Incorporated, and Lacquer Mat Systems, Incorporated. Both manufacturers indicated that their products are for "industrial" use, meaning that they are used mainly by businesses and professionals. However, hobbyists and amateur photographers may also purchase them. No photograph coatings were identified as being marketed exclusively for sale in the BAAQMD in order to comply with BAAQMD Rule 8-49.

Product Formulation:

Photograph coatings are designed to be hard enough to resist tears and other physical damage, yet flexible enough to resist cracking or breaking when photographs are trimmed or

handled. Photograph coatings are also designed to provide protection from moisture, spills, and, in some cases, ultraviolet radiation. Other necessary coating properties include good adhesion to photographs, proper gloss level, and resistance to yellowing.

Since photographic coatings are clear coatings, they contain resins, but not pigments, other than flatting pigments which reduce gloss without adding color to the coating. To achieve the desired coating properties, nitrocellulose or acrylic lacquer resins are used. Since these coatings are designed to leave a thin film, the amount of resin in the formulation is relatively low. According to the ARB Aerosol Paint Survey, the sales weighted average solids level for all photograph coatings identified was eight percent. Flatting agents are added to achieve a "flat" or "matte" finish with reduced gloss. Plasticizers may also be added to increase the flexibility of the coating.

All the photograph coatings identified in the ARB Aerosol Paint Survey were solvent-borne products. None contained methylene chloride or 1,1,1-trichloroethane. A variety of VOC solvents are used in photograph coatings, including isopropanol, toluene, isobutyl acetate, and methyl ethyl ketone. The propellants used in these products are hydrocarbon, including propane, isobutane, and normal butane. According to the ARB Aerosol Paint Survey, the sales-weighted average VOC content was 92 percent, with 66 percent contributed by solvent, and 26 percent contributed by propellant.

Proposed VOC Standard:

The VOC limit proposed for photograph coatings is 95 percent by weight. This VOC limit is consistent with the limit which has been in place in the Bay Area Air Quality Management District since August, 1991. At this level, all three products identified in the ARB Aerosol Paint Survey comply with the regulation.

According to one manufacturer, the proposed 95 percent VOC limit is needed for the following reasons: (1) low solids levels are necessary to prevent cracking and achieve a flexible coating; (2) the existing resin systems (acrylic or nitrocellulose lacquers) are very hard to make in high solids systems due to their high viscosity; (3) the coating must not yellow; (4) the coating must be fast drying; (5) the coating thickness must be very low (0.1-0.2 mils); and (6) the coatings must be resistant to heat to withstand some mounting operations (Sureguard).

All three products identified in the ARB Aerosol Paint Survey comply with the proposed 95 percent VOC level. Therefore, the proposed standard essentially places a cap on emissions, rather than to achieve emission reductions. Maintaining a standard consistent with the BAAQMD's is also desirable in that there will be a consistent VOC standard for this product category throughout the state. Additional emission reductions may be achieved from this category when the 1999 standards become effective.

## REFERENCES

Air Resources Board Aerosol Paint Survey, February 25, 1993.

Battelle Memorial Institute, Survey of Emissions from Solvent Use-Volume I: Aerosol Paints, Prepared for California Air Resources Board, Contract A132-085, September 16, 1994.

Sureguard, Facsimile to ARB staff, May 17, 1994.

## U. PLEASURE CRAFT FINISH PRIMER/SURFACER/UNDERCOATER

Proposed VOC Standard (1996): 75.0%

Product Description:

Pleasure craft finish primer/surfacer/undercoater (for brevity, "pleasure craft primer") is an aerosol coating applied to pleasure craft for the purposes of resisting corrosion, promoting adhesion of the topcoat, and producing a more uniform surface by filling in minor surface imperfections. These products differ from the "aviation or marine primers" category in that they are designed to be used on wood and fiberglass substrates, unlike aviation or marine primers, which are designed for use on metal substrates and must meet specific federal specifications. Pleasure craft primers are often applied prior to the use of topcoats during touch up of damaged finishes. According to the one manufacturer identified in the ARB Aerosol Paint Survey, the aerosol coating is essentially identical to their "brush-on" version of the coating, and is only available in white.

As shown in the following table, pleasure craft topcoats are a minor segment of the aerosol paint market, with less than one percent of the market share and VOC emissions from aerosol paints in California.

**Table IV-20**
**Pleasure Craft Finish Primer/Surfacer/Undercoater**
**Summary of Estimated 1992 Emissions and Sales***

| Number of Products | Total Category Sales (Lbs/Yr) | Market Share (%) | Emissions (Lbs/Yr) | Emissions (% of total) |
|---|---|---|---|---|
| 1 | 3,900 | < 1.0% | 2,900 | < 1.0% |

Source: Battelle Report, 1994.

* Data released by written permission of Kop-Coat, Incorporated.

Product Use:

Pleasure craft primers are used by boat owners and marine repair shops prior to application of a marine topcoat. Most often, the aerosol version of the product is used for touch up operations and as a coating over repair areas, such as the patching of fiberglass or wood hulls. The one product identified in the ARB Aerosol Paint Survey is applied in a manner similar to other aerosol paint products, as discuses in the "Product Use" section for flat aerosol paints, and is only available in white.

Product Marketing:

Pleasure craft topcoats are sold primarily in marinas or marine supply stores. Only one pleasure craft primer, "Z Spar: Spray Undercoat," was identified in the ARB Aerosol Paint Survey. The manufacturer, Kop-Coat Incorporated, identified themselves as a California-based small business in the ARB Aerosol Paint Survey. Kop-Coat sells their product for use by consumers and professional boat repair businesses.

Product Formulation:

The single manufacturer of pleasure craft topcoats uses a particular long-oil alkyd resin found to be durable upon exposure to marine conditions such as daily condensation, salt spray, and extreme ultraviolet radiation (Kop-Coat, 6/23/93). The product is solvent-borne, and contains a variety of solvents including ketones, aromatics, and petroleum distillates. The propellants used are isobutane and propane.

Proposed VOC Standard:

The VOC limit proposed for pleasure craft primers is 75 percent by weight. There is no corresponding category in the Bay Area Air Quality Management District for this category. This category was created to accommodate coatings which, according to the manufacturer, are subject to extreme environmental conditions in a marine environment. According to Kop-Coat, the manufacturer of the only product identified in the ARB Aerosol Paint Survey, the VOC level of their product, "Z-Spar: Spray Undercoat," cannot currently be reduced to the levels for flat or nonflat coatings because the viscosity of the existing resin is too high to spray in aerosol form at lower VOC levels. Kop-Coat reported that they are not aware of another lower viscosity resin at this time that would result in acceptable durability in the marine environment. Kop-Coat also agreed to a substantial reduction in the VOC content of their product in the future (Kop-Coat, 5/21/93, 6/15/93, 6/23/93).

As noted earlier, the pleasure craft finish primer/surfacer/undercoater category is an extremely small paint category. No emission reductions would be achieved by this standard since the only product in the category complies with the proposed 75 percent VOC standard. However, emission reductions are expected to be achieved when the 1999 future effective standards become effective.

## REFERENCES

Air Resources Board Aerosol Paint Survey, February 25, 1993.

Battelle Memorial Institute, Survey of Emissions from Solvent Use-Volume I: Aerosol Paints, Prepared for California Air Resources Board, Contract A312-085, September 16, 1994.

Kop-Coat, Inc., Letters to ARB staff, May 21, 1993, June 15, 1993, and June 23, 1993.

## V. PLEASURE CRAFT TOPCOAT

Proposed VOC Standard (1996): 80.0%

Product Description:

Pleasure craft topcoats are pigmented aerosol coatings designed and labeled for use as a final coating on pleasure craft (privately owned vessels used for noncommercial purposes). Pleasure craft topcoats are designed to provide a glossy finish that is resistant to condensation, salt mist, and extreme ultraviolet radiation above the waterline, or below the waterline if the vessel is stored out of water. According to the one manufacturer that reported the sale of pleasure craft topcoats in the ARB Aerosol Paint Survey, their product is essentially an aerosol version of the same basic coating in "brush-on" form.

Pleasure craft topcoats are a minor segment of the aerosol paint market, with less than 1 percent of the market share and VOC emissions from aerosol paints in California.

**Table IV-21**
**Pleasure Craft Topcoats**
**Summary of Estimated 1992 Emissions and Sales***

| Number of Products | Total Category Sales (Lbs/Yr) | Market Share (%) | Emissions (Lbs/Yr) | Emissions (% of total) |
|---|---|---|---|---|
| 1 | 2,300 | < 1.0% | 1,800 | < 1.0% |

Source: Battelle Report, 1994.

* Data released by written permission of Kop-Coat, Incorporated.

Product Use:

Pleasure craft topcoats are used by boat owners and marine repair shops as a final coating, typically over a coating of primer or undercoater. The coating is typically used to touch up small areas on boats, or to coat relatively small parts. The coating is typically used on boats less then 30 or 40 feet, such as privately-owned motorboats, sailboats, and canoes. These coatings are applied in a manner similar to other aerosol paint products, as discussed in the "Product Use" section for flat aerosol paints.

Product Marketing:

Pleasure craft topcoats are sold primarily in marinas or marine supply stores. Only one pleasure craft topcoat, "Z Spar: Spray Gloss Enamel," was identified in the ARB Aerosol Paint Survey. The manufacturer, Kop-Coat Incorporated, was identified as a California-based small business in the ARB Aerosol Paint Survey. Kop-Coat sells their aerosol pleasure craft topcoat for use by consumers and professional boat repair businesses.

Product Formulation:

The single manufacturer of pleasure craft topcoats uses a particular long-oil alkyd resin found to be durable upon exposure to marine conditions such as daily condensation, salt spray, and extreme ultraviolet radiation. The solvents and propellants are similar to those used in other aerosol paints. The solvents used include ketones, aromatics, and petroleum distillates, and the propellants are isobutane and propane (Kop Coat, 1/27/94).

Proposed VOC Standard:

The VOC limit proposed for pleasure craft topcoats is 80 percent by weight. There is no corresponding category in the Bay Area Air Quality Management District for this category. Similar to the pleasure craft primers mentioned previously, this category was created to accommodate coatings which, according to the manufacturer, are subject to extreme environmental conditions in a marine environment. According to Kop-Coat, the manufacturer of the only product identified in the ARB Aerosol Paint Survey, the VOC level of their product, "Z-Spar: Spray Gloss Enamel," cannot currently be reduced to the levels for flat or nonflat coatings because the viscosity of the existing resin is too high to spray in aerosol form at lower VOC levels. Kop-Coat reported that they are not aware of another lower viscosity resin at this time that would result in acceptable durability in the marine environment. Kop-Coat also agreed to a substantial reduction in the VOC content of their product in the future (Kop-Coat, 5/21/93, 6/15/93, 6/23/93).

As noted earlier, the pleasure craft topcoat category is an extremely small paint category. No emission reductions would be achieved by this standard since the only product in the category complies with the proposed 80 percent VOC standard. However, emission

reductions are expected to be achieved when the 1999 future effective standards become effective.

**REFERENCES**

Air Resources Board Aerosol Paint Survey, February 25, 1993.

Battelle Memorial Institute, Survey of Emissions from Solvent Use-Volume I: Aerosol Paints, Prepared for California Air Resources Board, Contract A132-085, September 16, 1994.

Kop-Coat Inc., Telephone conversation with ARB staff, January 27, 1994.

Kop-Coat Inc., Letters to ARB staff, May 21, 1993, June 15, 1993, and June 23, 1993.

## W. SHELLAC SEALERS, CLEAR AND PIGMENTED

Proposed VOC Standards (1996): 88.0% (clear)
75.0% (pigmented)

Product Description:

Shellac sealers are coatings formulated solely with resins derived from the secretions of the lac beetle (Laccifer lacca), and thinned with alcohol. Shellac sealers may be clear coatings or pigmented, generally white, coatings.

Shellacs are excellent sealers, holding in stains that tend to bleed through other coatings. Shellacs reportedly seal well because the alcohol and other solvents which they use are less prone to redissolving stains into the new coating. According to one manufacturer, some water-borne coatings tend to redissolve water-borne stains which then show through the new paint film. Similarly, solvent-borne paints tend to dissolve oil-based stains such as grease and crayon marks, which will bleed into the fresh coat of paint. The alcohol and other solvents used in shellacs dry very quickly, leaving little opportunity for stains to be dissolved. Finally, the dried shellac film is impervious to many substances such as "pitch" from wood knot holes (Zinsser, 11/5/93). Shellacs are also advertised as having good adhesion on a variety of surfaces, and no lingering odors that could contaminate food (Zehrung).

Based on ARB's Aerosol Paint Survey, the market shares held by clear and pigmented shellac products are both less than 1 percent of the aerosol paint market, with similarly low emissions. Sales information could not released in the table below due to concerns by one manufacturer that confidential market share information would be released.

**Table IV-22**
**Shellac Sealer: Clear and Pigmented**
**Summary of Estimated 1992 Emissions and Sales**

| | Number of Products | Total Category Sales (Lbs/Yr) | Market Share (%) | Emissions (Lbs/Yr) | Emissions (% of total) |
|---|---|---|---|---|---|
| Clear | 3 | ——— | < 1.0% | 25,900 | < 1.0% |
| Pigmented | 3 | ——— | < 1.0% | 95,100 | < 1.0% |

Source: Battelle Report, 1994.

Product Use:

Shellac sealers are used by painting contractors and individuals for a wide variety of uses. The pigmented shellac products, which are usually white, are used as a basecoat for a nonshellac topcoat and as a bond coat to tie hard to coat surfaces to a topcoat. Typical applications for pigmented shellacs include covering water spots on ceilings due to roof leaks, and sealing smoke, grease stains, and porous surfaces. Other uses for pigmented shellacs include preventing "bleed through" of wood knot holes and sealing out marks left by crayons, markers, lipstick, and graffiti (Zinsser, product literature).

Clear aerosol shellacs, like pigmented shellacs, have many different uses including the following: coating of furniture, paneling, woodwork, trim, cabinets, arts and crafts, wicker, and floors; sealing of wood surfaces prior to staining, varnishing, waxing or painting; sealing of drywall or spackling prior to painting or wallpapering; sealing in sap on pruned branches; and protecting copper and aluminum screening (Zinsser, product literature). These coatings are applied in a manner similar to other aerosol paint products, as discuses in the "Product Use" section for flat aerosol paints.

Product Marketing:

Aerosol shellac products are sold in paint stores, home improvement centers, hobby and craft shops, and hardware stores. The following three companies manufacture both clear and pigmented shellac according to the ARB Aerosol Paint Survey:

William Zinsser and Company, Inc. **Zynolyte Products Company**
Zehrung Corporation*

Of these manufacturers, Zynolyte Products Company is the only California based company, and is highlighted in **bold** text. Zehrung is the only company to identify itself as a small businesses in the ARB Aerosol Paint Survey. It is denoted with an asterisk (*).

Both clear and pigmented shellacs are sold primarily for household uses. According to the ARB Aerosol Paint Survey, 88 percent of clear shellacs, and 95 percent of pigmented shellacs are sold for household and consumer use, with the remainder of sales for either household or industrial use. None of the shellac sealers identified in the ARB Aerosol Paint Survey were sold for sale exclusively in the Bay Area Air Quality Management District.

Product Formulation:

Shellac products are unique in that their resin is from a natural source. The "lac" resin used in shellacs is derived from a product secreted from the lac beetle, which is only found in parts of India, Burma, and Thailand (Zehrung). The lac beetle feeds on the sap of particular trees referred to as "hosts" and exudes the reddish lac resin as a viscous fluid which gradually hardens upon exposure to air. The dried lac is referred to as "sticklac" and is scraped off the encrusted twigs during the harvest time. Lac is commercially cultivated by "infecting" carefully pruned host trees with the lac beetle. The sticklac must be refined to remove impurities such as wax, water, dye, insect debris, and wood particles, before the product is suitable for use in shellac (Bhowmik).

The primary solvent used in aerosol shellac products is typically denatured ethanol. However, according to the ARB Aerosol Paint Survey, methylene chloride and 1,1,1-trichloroethane were also used along with ethanol in some formulations. Acetone is also included in small amounts in some formulations. According to the ARB Aerosol Paint Survey, all of the shellac products reported in the survey are solvent-borne. The sales-weighted average VOC contents for clear and pigmented shellacs were reported to be 84 percent and 75 percent, respectively.

Other product ingredients include white pigments and fillers, in pigmented shellacs, and propellants, such as propane, isobutane, and n-butane, in both clear and pigmented shellacs. According to the ARB Aerosol Paint Survey, the sales-weighted average solids content of shellac sealers was estimated to be 11 percent for clear shellacs, and 25 percent for pigmented shellacs.

Proposed VOC Standard:

The VOC limits proposed for clear and pigmented shellac are 88 and 75 percent by weight, respectively. These VOC limits are consistent with the limits which have been in place in the Bay Area Air Quality Management District since the BAAQMD's aerosol paint rules was amended in August of 1991. Shellacs reportedly require a higher VOC content than flat and nonflat aerosol paints because the lac resin used cannot be increased too much without the viscosity of the product reaching a point where the product cannot be sprayed out of the can. According to one manufacturer, clear aerosol shellacs cannot presently contain more than 12 percent lac resin without viscosity reaching the point where the product cannot be sprayed out of the can effectively (Zinsser, 5/18/94).

All six products identified in the ARB Aerosol Paint Survey comply with the proposed VOC standards. Therefore, the proposed standards are designed to place caps on emissions, rather than to achieve emission reductions. Maintaining standards consistent with the BAAQMD's is also desirable in that there will be a consistent VOC standard for these product categories throughout the state. Additional emission reductions may be achieved from these categories when the 1999 standards become effective.

**REFERENCES**


Air Resources Board Aerosol Paint Survey, February 25, 1993.

Battelle Memorial Institute, Survey of Emissions from Solvent Use-Volume I: Aerosol Paints, Prepared for California Air Resources Board, Contract A132-085, September 16, 1994.

Bhowmik, "What is Shellac and its Chemistry in Nutshell," Shellac Export Promotion Council, 14/1B, Ezra Street, Calcutta-700 001, India.

Zehrung Corporation, Product literature, "Shellac: the natural resin," "Zerolac: White Pigmented Shellac," "Zehrung Clear Shellac."

Zinsser, Wm. & Co., Product literature, "Bulls Eye Spray Shellac," Bulletin DS0499 (6/89), and "B-I-N Primer-Sealer, Stain-Killer," Bulletin 687-Bn.

Zinsser, Wm. & Co., Telephone conversation with ARB staff, November 5, 1993.

Zinsser, Wm. & Co., Telephone conversation with ARB staff, May 18, 1994.


## X. SLIP-RESISTANT COATINGS

Proposed VOC Standard (1996): 80.0%

Product Description:

Slip-resistant coatings are safety coatings designed to prevent accidents on slippery surfaces. The slip resistance is achieved by using a grit that is mixed into the paint, leaving a roughened surface after the paint is dry. The coatings come in a variety of different colors and also clear. Slip-resistant coatings are generally designed to adhere to a variety of surfaces, including fiberglass, tile, concrete, wood, plastics, and metals.

As shown in the following table, slip-resistant coatings accounted for sales of about 1,000 pounds in 1992. This represents less than one percent of the market share and VOC emissions from aerosol paints in California.

**Table IV-23**
**Slip Resistant Coatings**
**Summary of Estimated 1992 Emissions and Sales***

| Number of Products | Total Category Sales (Lbs/Yr) | Market Share (%) | Emissions (Lbs/Yr) | Emissions (% of total) |
|---|---|---|---|---|
| 1 | 1,000 | < 1.0% | 770 | < 1.0% |

Source: Battelle Report, 1994.

* Data released by written permission of Forrest Paint Company.

Product Use:

Slip-resistant coatings were originally used in boats to prevent crew members and passengers from slipping on wet surfaces. They are now used anywhere where floors tend be slippery or wet, such as on stairs, in showers and bathtubs, and around ice-machines and jacuzzis. They are also applied to items like surfboards, hunting rifles, and hand rails. Slip-resistant coatings are used in homes, motels, retirement homes, schools, and public areas.

Slip-resistant coatings are applied in a manner similar to other aerosol paint products, as discuses in the "Product Use" section for flat aerosol paints. However, extra attention to surface preparation is often necessary to promote strong adhesion to the substrate. Fiberglass may need to be sanded and wiped clean with solvent or soap and water, exterior wood surfaces may need to be sanded and freshly painted with an exterior primer, and concrete and aluminum surfaces may need to be treated with an appropriate etching compound and rinsed. In addition, depending on the extent of wear, the product may require a new coating every 3 to 6 months (Forrest Paint, product label).

Product Marketing:

Slip resistant coatings are sold in industrial supply houses that sell safety products, in marine specialty stores, paint stores, and in hardware stores.

Only one slip-resistant aerosol coating, "Epoxy Spray with Grit," was identified in the ARB Aerosol Paint Survey. The manufacturer, Forrest Paint Company, identified itself as a small business located outside of California. Forrest Paint Company sells their product for both household and industrial uses.

Product Formulation:

Slip-resistant coatings are designed to provide traction on a variety of substrates, while maintaining resistance to wear and abrasion. The single manufacturer of these coatings

identified in the ARB Aerosol Paint Survey, Forrest Paint Company, uses an epoxy-ester resin to achieve this. According to this manufacturer, epoxy-ester resins are one part epoxies that polymerize (cure) upon exposure to oxygen in air. Epoxy resins are particularly well suited for these coatings since they adhere to a wide variety of substrates, including some that are difficult to coat, such as aluminum and fiberglass. Also, this manufacturer claimed that other resin types such as alkyds and polyurethanes may also be used in slip-resistant formulations (Forrest, 10/15/93). The grit used to provide the slip resistance is an inorganic compound that stays suspended in the formulation. Before the product is marketed, the degree of hardness of the coating is determined (pencil hardness) and the durability of the coating is tested by mechanically rubbing an object against a coated surface for a specified period of time.

The solvents and propellants used in the product are the same as those in most other aerosol paints. Solvents include acetone, xylene, and toluene, with the propellants isobutane and propane (Forrest Paint, product label).

Proposed VOC Standard:

The proposed VOC limit for slip-resistant coatings is 80 percent by weight. This VOC limit is lower than the 85 percent VOC standard in place in the Bay Area Air Quality Management District since the only product identified in the ARB Aerosol Paint Survey was below the 85 percent VOC in the BAAQMD.

According to the manufacturer, the VOC level cannot be reduced to the levels for flat or nonflat coatings because the high solids levels in products meeting these standards will render the "grit" used in the product ineffective (Forrest Paint, 10/15/93). In effect, the grit will be buried or covered with pigments and fillers, leaving less of the grit exposed on the substrate.

As noted earlier, the slip-resistant coatings category is an extremely small paint category. No emission reductions would be achieved by this standard since the only product in the category complies with the proposed 80 percent VOC standard. However, emission reductions are expected to be achieved when the 1999 future effective standards become effective.

**REFERENCES**

Air Resources Board Aerosol Paint Survey, February 25, 1993.

Battelle Memorial Institute, Survey of Emissions from Solvent Use-Volume I: Aerosol Paints, Prepared for California Air Resources Board, Contract A132-085, September 16, 1994.

Forrest Paint Company, Product label for "Firm Foot, Epoxy Spray with Grit."

Forrest Paint Company, Telephone conversation with ARB staff, October 15, 1993.

## Y. SPATTER/MULTI-COLOR COATINGS

Proposed VOC Standard (1996): 80.0%

Product Description:

The spatter/multi-color coating category consists of two types of aerosol paints: spatter coatings and multi-color coatings.

A spatter coating is a one unit can wherein spots, globules, or spatters of individual or contrasting colors appear on or within the surface of a contrasting or similar background. This is achieved by using immiscible paints. When sprayed, the paints do not mix together and dry as a two-phase system (Schneberger). Most spatter coatings can be top coated with a protective clearcoat, but it is not necessary. Therefore, often the clearcoat is sold separately from the spatter coating and not as a kit. Spatter coatings are typically used for do-it yourself automobile restoring (Krylon, 5/91).

The multi-color coating products are typically sold as a multi-component kit, consisting of both the granite-like basecoat and the clear topcoat in one package. Multi-color aerosol coatings are traditionally used for home decorating (Plasti-kote, 11/91).

The spatter/multi-color coatings category is one of the larger specialty categories of aerosol paint products in terms of sales and emissions. As shown in the estimated emissions and sales table, spatter/multi-color coatings accounted for sales of 217,300 pounds and one percent of the total aerosol paint sales, but produced less than one percent of the aerosol paint emissions in California in 1992, due to their relatively low-VOC content.

**Table IV-24**
**Spatter/Multi-color Coatings**
**Summary of Estimated 1992 Emissions and Sales**

| Number of Products | Total Category Sales (Lbs/Yr) | Market Share (%) | Emissions (Lbs/Yr) | Emissions (% of total) |
|---|---|---|---|---|
| 7 | 217,300 | 1.0% | 127,900 | < 1.0% |

Source: Battelle Report, 1994.

Product Use:

Spatter coatings are used for a variety of purposes. The spatter finishes have the appearance of small specks of color mixed at random, and are usually not topcoated with a clearcoat. Automobile trunks are often refinished in this manner, to restore the original multi-color speckle factory finish. It can also be used on metal dashboards and firewalls (Krylon, 5/91; Schneberger).

As mentioned previously, multi-color coatings are typically used for home decorating. For the purposes of home decoration, multi-color coatings provide the texture and look of stone or granite. These coatings can be used on many different substrates, such as wood, metal, plastic, glass, styrofoam, statuary, and wicker, but are for indoor use only (Krylon, 5/91). The preparation is unique for this type of coating because, unlike ordinary spray paints, the recommendation is to shake the product gently for approximately ten seconds (Krylon, 5/91). Most spray paints recommend shaking longer and harder, but the spatter/multi-color formulations need less rigorous mixing to provide continued separation of the colors instead of blending. After the basecoat has dried for four hours, it is recommended that the clear topcoat be applied to provide a longer lasting finish.

Like most aerosol paints, spatter/multi-color coatings should be applied in a well-ventilated and dust-free area. It is also recommended that the spatter coatings be applied to moisture free areas, because the color may bleed if paint film is softened by water (Krylon, 5/91). For best results with the spatter coatings, application should occur at temperatures of 70° F to 80° F.

Product Marketing:

Both the spatter and multi-color coating products are sold in retail outlets for home decorating, hardware stores, home improvement centers, and discount stores. The spatter coatings, for automobiles, can also be found in retail auto part stores. These products are typically sold in 12 to 16 ounce cans for the basecoat, and 6 to 8 ounce cans for the clearcoat product.

The following five companies have been identified in the ARB Aerosol Paint Survey as manufacturing or marketing spatter/multi-color aerosol paint products.

| | |
|---|---|
| **Dunn-Edwards*** | Testor Corp/Pactra* |
| Krylon/Dupli-color | **Zynolyte Products** |
| Plasti-kote Co.* | |

Two of the seven companies, denoted in bold, were identified in the ARB Aerosol Paint Survey as companies that are based in California. In addition, three of the above companies identified themselves as small businesses, as noted with an asterisk (*).

According to the ARB Aerosol Paint Survey, over 99 percent of the sales of spatter/multi-color coatings were accounted for by products sold for household usage, with only less than one percent sold for both industrial and household usage. None of the products sold in California in 1992, were marketed specifically for use in the Bay Area Air Quality Management District (BAAQMD) in order to comply with the BAAQMD's aerosol paint rule (ARB Survey, 1993).

Product Formulation:

The spatter and multi-color coatings have similar basecoat formulations. The basecoat typically contains approximately 30 percent water, 18 percent nonvolatile materials, and 52 percent VOC (Plastic-kote, 5/94). The typical spatter/multi-color basecoats have two or more incompatible binder systems dispersed in a liquid. Upon drying, the binder droplets retain their separate identity as they coalesce on the substrate. These coatings have rough surfaces. The textured coating is achieved by close control of the solvent blend. Close control of spraying conditions is essential (Schneberger, p. 30).

As mentioned previously, multi-color coatings are a dual application system and include a clear topcoat for protection. The clearcoat provides moisture protection for the basecoat and a durable, glossy finish. The clearcoat product formulation is subject to the general clear coating category's VOC content standards, unless it is averaged with the VOC content of the basecoat under the "multicomponent kit provision" of the regulation, as described below under "Proposed VOC Standard."

According to the ARB Aerosol Paint Survey, the sales-weighted average VOC content for the spatter/multi-color (basecoat) category is 59 percent, with a range from 32 percent to 63 percent. Four of the seven basecoat products sold in California are waterborne formulations, or 99 percent of the total pounds sold in this category. The sales-weighted average solids content of the spatter/multi-color products was 18 percent by weight. No products in this category that were reported in the ARB Aerosol Paint Survey, contain either methylene chloride or 1,1,1-trichloroethane.

Proposed VOC Standard:

The VOC limit proposed for spatter/multi-color coatings is 80.0 percent by weight, consistent with the Bay Area Air Quality Management District's aerosol paint regulation. This VOC limit would apply to both spatter coatings, which are generally used without clear coatings, and multi-color coatings, which are generally sold in multi-component kits, which include a clear protective coating. The proposed 80.0 percent limit is designed to place a limit on the VOC content of both these coatings, rather than to achieve emission reductions. However, emission reductions will be achieved when the proposed future effective standards become effective in 1999.

All of the spatter/multi-color coatings identified in the ARB Aerosol Paint Survey are below the proposed 80.0 percent VOC level. As stated in the section above, the sales weighted average VOC content of the spatter/multi-color products identified in the ARB's survey is 59 percent, well below the proposed standard. However, the majority of the products sold in this category are multi-color coatings sold in "multi-component kits" consisting of a multi-color coating (subject to an 80.0 percent VOC limit) and a clear protective topcoat (subject to a 67.0 percent VOC limit). According to one manufacturer, the clear protective topcoat for use over multi-color coatings cannot meet the 67.0 percent VOC

limit for general clear coatings because water-borne multi-color coatings would be dissolved by a low-VOC, water-borne clear coating (Plasti-kote, 5/9/94). However, a provision has been proposed for inclusion in the regulation which would address this concern by allowing manufacturers to, in effect, "average" the VOC of the products in the kit by offsetting a higher VOC product with a lower VOC product. As required in the provision under section 94522(e), the total weight of VOC in a multi-component kit must be less than the total weight of VOC in each product in the kit, had each product met the applicable VOC standards. In the case of multi-component kits with a multi-color coating product and a clear coating, the higher VOC protective clear coating, which is generally well above the 67.0 percent limit for clear coatings, is offset by the lower VOC spatter coating, which is generally well below the 80.0 percent standard.

**REFERENCES**


Air Resources Board, Aerosol Paint Survey, February 25, 1993.

Battelle Memorial Institute, Survey of Emissions from Solvent-Use-Volume I: Aerosol Paints, Prepared for California Air Resources Board, Contract A132-085, September 16, 1994.

Krylon, Decorative Paint Kits, Stone Craft, Product literature, A Division of Sherwin-Williams Company, May 1991.

Plasti-kote, Create Your Own Style, Fleck Stone, Product literature, November 1991.

Plastic-kote, Telephone conversation with ARB staff, May 9, 1994.

Schneberger, Gerald L., General Motors Institute, Understanding Paint and Painting Processes, Second Edition, Hitchcock Publishing Company, 1989, pp. 30, 184-185.


## Z. VINYL/FABRIC/LEATHER/POLYCARBONATE COATINGS

Proposed VOC Standard (1996): 95.0%

Product Description:

A vinyl/fabric/leather/polycarbonate coating is a coating designed and labeled for use on vinyl, fabric, leather, or polycarbonate substrates. They may be identified by such labels as "vinyl color sprays," "vinyl spray paints," "fabric color sprays," "vinyl sprays," "vinyl color spray finishes," "leather color sprays," or "polycarbonate coatings."

Vinyl or fabric sprays are designed to change colors, cover unsightly stains, restore, or renew dull, worn, or faded vinyl, leather, leatherette, fabric, plastic, and other related materials by making them look like new (Krylon, Product Label, Colorworks, VC 1205 Black; Plasti-kote, Product Label, Ultra Vinyl Spray Paint; Zynolyte, Product Label, Fabspray Fabric Color Spray, Seafoam Green,12/92, Product Label, Fabspray Vinyl Color Spray, Silver Gray, 2/93, Product Information Sheet, Fabspray Fabric and Vinyl Sprays). They are also intended to help preserve the material and not to flake, crack, chip, peel, or rub off. Polycarbonate sprays can be applied on radio controlled models having polycarbonate shell bodies under the trade name "Lexan" (Coverite, Product Label, Body Shop, No. 102 Red Hot; Testor (Pactra Inc.), Product Label, Racing Finish, RC250 Outlaw Black).

The vinyl/fabric/leather/polycarbonate spray coatings category is one of the smaller aerosol paint categories with respect to both sales and emissions. As shown in the emissions summary, sales of vinyl/fabric/leather/polycarbonate spray coatings account for 57,000 pounds or less than 1 percent of the total aerosol paint sales in California in 1992. The emissions are likewise responsible for 52,200 pounds of VOC emissions or less than 1 percent of the total reported emissions in California for 1992.

**Table IV-25**
**Vinyl/Fabric/Leather/Polycarbonate Coatings**
**Summary of Estimated 1992 Emissions and Sales**

| Number of Products | Total Category Sales (Lbs/Yr) | Market Share (%) | Emissions (Lbs/Yr) | Emissions (% of total) |
|---|---|---|---|---|
| 33 | 57,000 | < 1.0% | 52,200 | < 1.0% |

Source: Battelle Report, 1994.

Product Use:

Vinyl/fabric/leather/polycarbonate sprays are used by furniture manufacturers, automotive, boat, and home furniture dealers, upholsterers, automotive detailers, and shoe and luggage repairers. They are also used by hobbyists and modelers.

Vinyl, fabric, and leather sprays may be applied on numerous surfaces made of vinyl, fabric, and leather respectively. In the home and office environment, these sprays can be applied on carpeting, furniture (including playroom and den furniture, kitchen and dinette sets, office furniture, couches and lounge chairs, and patio furniture) and other upholstery, boots and shoes, headboards, luggage and handbags, wall and panel coverings, and sporting goods. In the automotive environment, these sprays can be used on dashboards, visors, roof tops, convertible tops, upholstery, and chair pads. Other applications include bicycle, tractor and snowmobile seats and boat upholstery, cushions, and decking. Polycarbonate sprays are primarily applied on radio controlled model car bodies and other model body shells made of

polycarbonate material under the trade name "Lexan."

Depending on product, prior to application of the vinyl/fabric/leather/polycarbonate spray, the surface must be thoroughly cleaned with mild detergent to remove all wax, grease, dirt, dust, etc. This should be followed by a rinse with clean water and the surface allowed to dry. All undesired spray areas are then masked to protect them from overspray. At this point, the application procedure is similar to that described for a flat spray coating.

Product Marketing:

Establishments which sell vinyl, leather and fabric sprays are automotive, home and boating supply stores, discount department stores, upholstery shops, shoe and luggage shops, shoe repair shops, and automotive and boating dealers. Polycarbonate sprays are usually sold by hobby distributors, mail-order houses, and hobby stores.

According to the ARB Aerosol Paint Survey the following 7 companies manufacture or market vinyl/fabric/leather/polycarbonate sprays:

| | |
|---|---|
| **BAF Industries** | Plasti-kote Company, Inc.* |
| Coverite* | Testor Corporation* |
| Dupli-Color Products Company | **Zynolyte Products Company** |
| Krylon | |

The companies that are shown in **bold** were reported as California businesses. The companies denoted with and asterisk (*) identified themselves as small businesses.

Based on the ARB Aerosol Paint Survey, 5 percent of the products in this category were sold as industrial products, 77 percent were sold as household products, and 18 percent were sold as both industrial and household products. Of these, none were marketed specifically for sale in the Bay Area Air Quality Management District (BAAQMD) in order to comply with the BAAQMD's aerosol paint regulation.

Product Formulation:

Vinyl and leather finish spray formulations generally have resins that are thermoplastic acrylics modified with plasticizers to provide good gloss, outdoor durability, and minimal discoloration on aging or exposure. Aromatic hydrocarbons such as toluene and xylene, and ketones such as acetone and methyl ethyl ketone are representative solvents used to apply the resins and solids in these formulations (Plasti-kote, 6/1/93). The typical propellants used in vinyl sprays are propane and isobutane.

Fabric spray coatings may generally have vinyl resins modified heavily with plasticizers to provide strength and toughness with good water, abrasion, and chemical resistance. Some of the general types of solvents used are aliphatic petroleum distillates,

ketones such as pentanone and butanone, and acetates such as 1-methoxy-2-propanol acetate (Zynolyte (Major Paint), 6/14/93). Similar to the vinyl sprays above, propane and isobutane are used as propellants.

Polycarbonate spray coatings may contain vinyl polymer, epoxy or acrylic resins. Some advantages of using a vinyl resin have been mentioned above. For epoxy resins, they are known for their resistance to various types of chemicals, their toughness, abrasion resistance, and flexibility. The acrylic resins have good durability and minimal discoloration on aging or exposure. Some of the general types of solvents used for these formulations may include ketones such as acetone and methyl ethyl ketone, aromatic hydrocarbons such as xylene and toluene, and alcohols such as diacetone alcohol (Testor, 5/19/92). Other formulations may include titanium dioxide as dust, aluminum, and odorless mineral spirits (Coverite, 4/19/90). Typical propellants may be propane and isobutane.

According to the ARB Aerosol Paint Survey, the minimum VOC content of the products sold in this category was 67 percent, the maximum VOC content was 96, and the sales-weighted average VOC content was 92 percent. The survey also showed no products in this category were produced from a water-borne formulation. The sales-weighted average solids content for the products in this category was 8 percent. According to one manufacturer, the solids content must be kept low because some of the resins used in this product category will not spray well at a solids content higher than 10 percent. Also, for the product to effectively penetrate a variety of fabrics and dry quickly, the solids content should be kept low. No products in this category, reported in the ARB Aerosol Paint Survey, contained 1,1,1-trichloroethane or methylene chloride.

Proposed VOC Standard:

The proposed VOC limit for vinyl/fabric/leather/polycarbonate spray coatings is 95 percent by weight, consistent with the BAAQMD aerosol paint rule (except that leather products were added). This limit will not achieve significant emission reductions since the majority of products already comply with the proposed VOC standard. However, emissions reductions are expected to be achieved when the 1999 standards become effective.

Based on the ARB Aerosol Paint Survey, there are 32 complying products that contributed an estimated 84 percent of the sales in California in 1992, which indicates that these products can readily meet the standard. In the BAAQMD, vinyl/fabric/polycarbonate coatings have been required to meet a 95 percent VOC level since August 1991. Of the 32 complying products being sold in California, none of the products are being exclusively sold in the Bay Area which indicates the 95 percent level is being met throughout the state. The 32 complying products are marketed by the following six companies: BAF Industries, Coverite, Krylon/Dupli-Color Products, Plasti-kote Company Inc., Testor Corporation/Pactra Inc., and Zynolyte Products Company.

According to one manufacturer, a high-VOC limit is needed for these products to

achieve good spray characteristics for the types of resins used. Thermoplastic acrylics are fairly high molecular weight species which need a high-solvent content to spray well. Vinyl resins must be at low viscosity to effectively penetrate a variety of fabrics and dry quickly.

Furthermore, since vinyl/fabric/leather/polycarbonate products represent a small share of the emissions from aerosol paint, the 95 percent standard would allow companies time to concentrate their reformulation efforts on larger sales categories. Emission reductions can be achieved later with the 1999 standards, when manufacturers have more resources and time to focus on the small product categories.

**REFERENCES**


Air Resources Board Aerosol Paint Survey, February 25, 1993.

Battelle Memorial Institute, Survey of Emissions from Solvent-Use-Volume I: Aerosol Paints, Prepared for California Air Resources Board, Contract A132-085, September 16, 1994.

Coverite, Material Safety Data Sheet, Body Shop, No. 101 Whizzer White, April 19, 1990.

Coverite, Product Label, Body Shop, No. 102 Red Hot.

Krylon, Product Label, Colorworks Vinyl Spray, VC 1205 Black.

Plasti-kote Company, Inc., Material Safety Data Sheet, Aerosol Spray Paint, June 1, 1993.

Plasti-kote Company, Inc., Product Label, Ultra Vinyl Spray Paint.

The Testor Corporation (Pactra, Inc.), Material Safety Data Sheet, Racing Finish, RC250 Outlaw Black, May 19, 1992.

The Testor Corporation (Pactra, Inc.), Product Label, Racing Finish, RC250 Outlaw Black.

Zynolyte Products Company (Major Paint Company), Material Safety Data Sheet, Fabric Spray, 9700 Black, June 14, 1993.

Zynolyte Products Company, Product Information Sheet, Fabspray Fabric and Vinyl Sprays.

Zynolyte Products Company, Product Label, Fabspray Fabric Color Spray, Seafoam Green (9722), December 1992.

Zynolyte Products Company, Product Label, Fabspray Vinyl Color Spray, Silver Gray (9624), February 1993.

## AA. WEBBING/VEILING COATINGS

Proposed VOC Standard (1996): 90.0%

Product Description:

A Webbing/veiling coating is a coating which is formulated to give a stranded to spider-webbed appearance when applied. Often these products are made of thermoplastic paint material that sprays out of the can in thin filaments, or "webs" of color. The products in this category are generally identified by their labels as "marbling" or "webbing" spray.

Webbing/veiling sprays offer webbing spray finishes that can modify the appearance of most surface types. These spray paints can adhere to paints, plastics, fabrics, and other surfaces. One company offers colors such as "hot pink," "electric blue," and "neon orange" (Zynolyte, Product Information Sheet, Fanta-Z Decorative Webbing Spray Finish). Another company offers colors such as "yellin' yellow," "zappin' green," and "be-bop blue" (Krylon, 3/92). This company also produces a marbling kit which consists of a 12 ounce can of basecoat and a 3.5 ounce can of "Marble-izer" (Krylon, 10/91). The basecoat provides the surface for the marble-izer and the marble-izer is a special spray that projects fine filaments or veins of a contrasting color to create a marbled effect.

The webbing/veiling spray coating category is one of the smaller aerosol paint categories with respect to sales. The number of products sold and the total category sales are not shown because the two companies, Krylon and Zynolyte Products Company, that reported data requested that their data be kept confidential. With regard to the other data, the emissions summary below shows that the sales of webbing/veiling spray coatings account for less than 1 percent of the total aerosol paint sales in California in 1992. These products also make up a small segment of the aerosol paints emissions, producing 23,600 pounds of VOC emissions or less than 1 percent of the total reported emissions in California for 1992.

**Table IV-26**
**Webbing/Veiling Spray Coatings**
**Summary of Estimated 1992 Emissions and Sales**

| Number of Products | Total Category Sales (Lbs/Yr) | Market Share (%) | Emissions (Lbs/Yr) | Emissions (% of total) |
|---|---|---|---|---|
| — | — | < 1.0% | 23,600 | < 1.0% |

Source: Battelle Report, 1994.

Product Use:

Webbing/veiling sprays are used by a variety of people including artists, automotive detailers, automotive remodelers, and automotive refinishers.

Webbing/veiling sprays may be applied on numerous types of objects such as radio controlled cars, planes, and helicopters, full size cars, hot rods, vans, and trucks, helmets, bikes, skateboards, sneakers, and teeshirts. The types of fabrics which usually accommodate webbing/veiling sprays are vinyl, canvas, cotton, and denim. However, some synthetic materials may be sensitive to the sprays. This is why testing them on a small area is recommended. Washing the fabric is possible after the spray is applied, but a waiting period of least 24 hours is suggested (Krylon, 8/92).

Before the product is applied, the surface must be thoroughly cleaned of any loose paint, oil, grease, rust, or rust scales. Manufacturers of these aerosol paints also recommend to test spray the product on a piece of cardboard or newspaper beforehand. The application procedure is similar to that described for the flat spray coating category.

Product Marketing:

Webbing/veiling sprays are sold in discount department stores, sporting goods stores, and arts, crafts and hobby supply stores. They may also be purchased through mail order houses.

According to the ARB Aerosol Paint Survey, the following 2 two companies manufacture or market webbing/veiling sprays:

Krylon/Dupli-Color Products **Zynolyte Products Company**

Zynolyte Products Company, shown in **bold**, was identified in the ARB Aerosol Paint Survey as a California based company. Neither of the companies shown identified themselves as a small business in the survey.

Two products were reported being sold in 1992 in the ARB Aerosol Paint Survey. Both of these products were sold for household use. None of these products were marketed specifically for sale in the BAAQMD.

Product Formulation:

According to one manufacturer, the resin type generally used for webbing/veiling sprays is a vinyl resin which helps to provide strength and toughness, with good water, abrasion, and chemical resistance. Based on the ARB Aerosol Paint Survey, the sales-weighted average solids content for this category was 10 percent. This is relatively low when compared to the general flat and nonflat categories. The solids content must be low because, according to the manufacturer, for the product to produce the "web," the product must contain fast-evaporating solvents and relatively large amounts of propellant. There were no products reported in this category that were water-borne formulations.

Typical solvents used in webbing/veiling sprays are ketones, xylene, toluene, and alcohols (Krylon, 4/92, 1/31/94, 2/2/94; Zynolyte (Major Paint), 1/8/92). The typical propellant used is dimethyl ether (DME) (Krylon, 2/2/94; Zynolyte (Major Paint), 1/8/92). According to one manufacturer, the DME propellant is more compatible with and helps to better expel the resin than traditionally used hydrocarbon propellants.

Due to the fact that only two products were reported by two companies and their request to keep the data confidential, the minimum and maximum VOC content is not shown. However, according to the ARB Aerosol Paint Survey, the sales-weighted average VOC content was 90 percent. No products in this category, reported in the ARB survey, contained 1,1,1-trichloroethane or methylene chloride.

Proposed VOC Standard:

The proposed VOC standard for webbing/veiling sprays is 90 percent by weight, which is slightly lower than the BAAQMD standard of 95 percent. Based on the ARB Aerosol Paint Survey, a 90 percent VOC content for webbing/veiling sprays is feasible and is essentially an emissions cap.

According to the ARB Aerosol Paint Survey, the percent of products that comply at the proposed 90 percent level is 81 percent. This indicates that most of the products already comply with the proposed standard. The 2 complying products are marketed by the following two companies: Krylon/Dupli-Color Products and Zynolyte Products Company.

The proposed standard is an emissions cap for several reasons. At this time the VOCs emitted from the use of webbing/veiling sprays is a relatively small source of emissions, and alternative low-VOC products have not been identified from the ARB Aerosol Paint Survey. According to one manufacturer, to allow the vinyl resin to produce the "web-like" appearance, the product must be provided with a compatible high solvent and propellant content. In addition, since the market share held by webbing/veiling products is small, companies will be afforded the opportunity to focus their reformulation efforts on product categories having higher sales first. Since the 1999 standards will require further emission reductions, companies will have additional time to concentrate on the lower sales product categories.

**REFERENCES**

Air Resources Board Aerosol Paint Survey, February 25, 1993.

Battelle Memorial Institute, Survey of Emissions from Solvent-Use-Volume I: Aerosol Paints, Prepared for California Air Resources Board, Contract A132-085, September 16, 1994.

Krylon, Material Safety Data Sheet, Raz-L Daz-L, January 31, 1994.

Krylon, Material Safety Data Sheet, Black Marble-izer, February 2, 1994.

Krylon, Product Information Sheet, Marble Craft Decorative Paint Kits, October 1991.

Krylon, Product Information Sheet, Raz-L Daz-L Webbing Spray, March 1992.

Krylon, Product Information Sheet, Raz-L Daz-L Webbing Spray, August 1992.

Krylon, Product Label, Raz-L Daz-L Webbing Spray, April 1992.

Zynolyte Products Company (Major Paint Company), Material Safety Data Sheet, Fanta-Z 8800 Silver Lace, January 8, 1992.

Zynolyte Products Company, Product Information Sheet, Fanta-Z Decorative Webbing Spray Finish.

## BB. WELD-THROUGH PRIMER COATINGS

Proposed VOC Standard (1996): 75.0%

Product Description:

A weld-through primer is a coating designed and labeled to provide a bridging or conducting effect to provide corrosion protection following welding. It is intended to restore corrosion protection to the autobody structure after it has been damaged due to a collision or the repair process. It is also intended to bring back the corrosion integrity of the damaged structure to a similar level as the undamaged portion of the vehicle being repaired to prevent future corrosion problems.

As automotive manufacturers continue to develop more high strength steel and unibody design in vehicle construction, the ability to make and provide corrosion protection to metal-inert gas (MIG) welds has become increasingly important in collision repairs. Weld-through primers are designed to be applied to metal surfaces prior to welding which will then provide corrosion protection after the weld (3M, Product Information Sheet, 3M Brand Weld-Thru Coating).

According to the ARB Aerosol Paint Survey, the weld-through primer category is one of the smaller aerosol paint categories with respect to sales, with less than 1 percent of the total sales. A sales and emissions summary is not provided for this category since only one company submitted data for this category, and the company requested that the data remain confidential.

Product Use:

Weld-through primers are used primarily by automotive collision repairers. But there may be some limited uses from home automotive collision repairers and remodelers.

Weld-through primers are only to be used on bare metal. Before the product is applied, the surface must be cleaned of all paint, rust, oil, and grease. The application procedure to be followed is similar to that described for flat spray paints. It is also recommended that the coating be dry to touch (usually 10-15 minutes) before the parts be MIG welded.

According to the 3M Company (Product Label, 3M Weld-Thru Coating), prior to applying plastic filler, the weld should be grind welded with a fiber disc to remove any exposed weld-through primer. In non-cosmetic areas where plastic filler is not to be used, 3-4 coats can be applied to the weld areas after grinding. After drying, the area can be applied with an undercoating, primer or paint.

Product Marketing:

Establishments which sell weld-through primers include automotive and home supply stores, discount department stores, and automotive paint supply stores. According to the ARB Aerosol Paint Survey, the 3M Company is the only company which reported sales of weld-through primers. This one product was sold as an industrial use product. Also, according to the ARB Aerosol Paint Survey, the product was not specifically marketed for sale in the BAAQMD.

Product Formulation:

The weld-through primer coatings contain phenoxy resin which is a bisphenol A and epichlorohydrin copolymer. The resin is a high molecular weight thermoplastic material which uses the same raw materials as epoxy resins, but contains no epoxy groups (3M, 3/30/94). Epoxy resins are resistant to a variety of chemicals and are known for their toughness, abrasion resistance, and flexibility. They also adhere very well to materials such as metals. The solids content for this coating consists primarily of zinc along with the pigment trimaganese tetroxide, phenoxy resin, and mica. Two solvents are used in the weld-through primer formulation: methyl ethyl ketone and toluene. The typical propellants used are propane, isobutane, butane, and ethane (3M, 4/14/93).

According to the ARB Aerosol Paint Survey, the one product reported does not contain 1,1,1-trichloroethane or methylene chloride. However, due to the confidential nature of the data, no information can be provided regarding VOC or solids content.

Proposed VOC Standard:

The proposed VOC standard for weld-through primers is 75 percent by weight and is essentially an emissions cap for several reasons. According to the ARB Aerosol Paint Survey, the one product being sold in California in 1992 complies with the 75 percent VOC limit. The proposed standard is also consistent with the BAAQMD standard where weld-through primers have been required to meet a 75 percent VOC limit since August 1991. In

addition, since emissions from this category are small and alternative low-VOC products have not been identified in the ARB Aerosol Paint Survey, the proposed VOC standard will also allow the manufacturer to focus its efforts on reformulating the product categories with the higher sales first.

According to the 3M Company (3/30/94), a 75 percent VOC limit will allow enough methyl ethyl ketone to solubilize the phenoxy resin. Also, since the zinc and trimaganese tetroxide are very heavy metals that tend to settle in the can and create caking, a high level of solvent along with the mica help to keep the heavy chemicals loose so they can be shaken in the can. Additionally, zinc tends to spray poorly and the high solvent content is needed to obtain good spray characteristics.

The emission cap will prevent the VOC emissions from increasing for the weld-through primer category while allowing the company time to reformulate its product and achieve emission reductions later when the 1999 standard becomes effective.

**REFERENCES**

Air Resources Board Aerosol Paint Survey, February 25, 1993.

Battelle Memorial Institute, Survey of Emissions from Solvent-Use-Volume I: Aerosol Paints, Prepared for California Air Resources Board, Contract A132-085, September 16, 1994.

3M Company, Material Safety Data Sheet, 3M Brand Weld-Thru Coating, April 14, 1993.

3M Company, Product Information Sheet, 3M Brand Weld-Thru Coating.

3M Company, Product Label, Weld-Thru Coating.

3M Company, Written correspondence to ARB staff, March 30, 1994.

## CC. WOOD STAINS

Proposed VOC Standard (1996): 95.0%

Product Description:

Wood stains are products that are applied to wooden surfaces to color and enhance the naturally occurring grain pattern of the wood without concealing the grain. There are two kinds of wood stains: penetrating stains and film-forming stains. Penetrating stains are absorbed several layers deep into the wood through the pores residing in the wood, thereby depositing pigments and resin which stain the wooden grain. Film-forming wood stains do not penetrate into the wooden grain but form a thin, semitransparent surface coat instead.

Wood stains are available in many different wood tones, such as natural oak stains, mahogany, and walnut, to name a few. Upon staining, the original wooden surface takes on the look of the applied wood tone; for example, pine wood can be stained with mahogany stain to take on the rich dark red of mahogany wood, giving it the appearance of real mahogany.

As shown in the estimated emissions and sales table, wood stains are a minor segment of the market, representing less than 1 percent of the aerosol paint category based on sales volume. Accordingly, emissions from this category are also small, contributing less than 1 percent of the total emissions generated from all aerosol paints.

**Table IV-27**
**Wood Stains**
**Summary of Estimated 1992 Emissions and Sales***

| Number of Products | Total Category Sales (Lbs/Yr) | Market Share (%) | Emissions (Lbs/Yr) | Emissions (% of total) |
|---|---|---|---|---|
| 8 | 30,600 | < 1.0% | 23,400 | < 1.0% |

Source: Battelle Report, 1994.

* Data released by written permission of Deft Incorporated, Behr Process Corporation, and Zynolyte Products Company.

Product Use:

Wood stains can be applied to a variety of different woods, including pine, maple, birch, oak, cherry, walnut, and many more. Since unstained natural wood can vary from light to dark, the final appearance of the stain color is affected by the original wood tone, the type of wood, and the wood texture. Soft woods such as pine, fir, spruce, hemlock, and others, absorb the stain irregularly which may lead to a blotchy appearance if no pre-stain sealer is applied (Behr).

Wood stains are typically used on furniture, hardwood floors, cabinets, molding, paneling, and other wooden objects. Aerosol wood stains satisfy a market niche for small or difficult to paint objects, such as carvings and window shutters, or may be used in wood touch-up and repair processes. Wood stains are applied in a manner similar to other aerosol products (as described under "product use" for flat paint products. Some wood stains contain waxes that provide water repellency on the wood surface, but in many cases an additional clear coat is applied to the product to provide further protection.

Product Marketing:

Wood stains are sold in hardware stores, building supplies warehouses and paint stores. Three following three manufacturers reported selling these coatings in California:

**Behr Process Corporation** **Zynolyte Products Company**
**Deft Incorporation ***

All of these companies were identified as California-based companies in the ARB Aerosol Paint Survey. In addition, Deft Incorporated identified itself as a small business in the ARB survey. All of the products in this category are sold for household use only.

Product Formulation:

Penetrating wood stains are oil based products, using plant oils such as linseed oil or tung oil. The oil, together with the resin and the solvent, functions to carry the pigment into the wood and embed it in the grain. Depth of penetration can range from 1/16 inch to 1/32 inch, depending on the nature of the wood and the properties of the applied stain (Behr, 2/3/94; Deft, 2/17/94). Some oil stains contain waxes to supply additional protection and sheen (Behr 11/93).

Film-forming stains are solvent-borne coatings which contain alkyds or acrylic resins (Behr, 2/10/94) and coat the wood surface with a thin, low hiding film (Deft, 2/4/94; Behr, 2/3/94). In this case, the solvent functions to deposit a desired amount of pigment and resin onto the surface, leaving a thin layer of stain on the wood surface.

The solvents used in aerosol wood stains typically include mineral spirits, acetone and ethyl acetate in oil-based products and naphtha and others in film-forming stains. The amount of solvent, excluding exempt solvents, ranges between 87 to 96 percent by weight (ARB Survey; Behr 10/91; Deft, 2/4/94). The sales weighted VOC average is 76 percent. This sales weighted VOC average appears relatively low due to the fact that some products use VOC exempt solvent. About 40 percent of all wood stains sold in 1992 contained exempt solvents (ARB Survey). According to the ARB Aerosol Paint Survey, no water-based aerosol wood stains were available.

Typically wood stains have a low-solid content, ranging from about 4 to 13 percent, with a sales weighted average of 8 percent (ARB Survey). The prevalent pigments used in wood stains are natural earths, such as Sienna and Umber. Both Sienna and Umber are iron oxide ores, which come from Italy, Spain, and Turkey. Commonly used propellants in these products are hydrocarbon propellants ranging from 15 to 30 percent by weight (ARB Survey; Behr, 10/91).

Proposed VOC Standard:

The proposed standard for this category is 95 percent VOC by weight. This standard is consistent with the Bay Area Air Quality Management District's aerosol paint rule.

According to the ARB Aerosol Paint Survey, 3 out of 8 products comply without using exempt solvents. The other products are within 2 percent of the proposed standard and should have no difficulty in meeting the proposed limit. Therefore, the proposed 1996 standard essentially limits the VOC emissions from these products to current levels. However, emission reductions are expected to be achieved when the 1999 standards become effective.

The high-VOC limit is necessary to allow for a formulation that is low in solids and will not conceal the grain of wooden surfaces. No low-VOC products were identified in the ARB Aerosol Paint Survey, and currently we are not aware of any technology that would achieve a lower VOC limit in this category. However, as new low-VOC technology emerges in related paint categories, the transfer of technology to the wood stain category might be feasible in the future.

**REFERENCES**

Air Resources Board Aerosol Paint Survey, February 25, 1993.

Battelle Memorial Institute, Survey of Emissions from Solvent-Use-Volume I: Aerosol Paints, Prepared for California Air Resources Board, Contract A132-085, September 16, 1994.

Behr, Product literature, "Scandinavian Oil Wood Stains."

Behr, Material Safety Data Sheets, October 1991.

Behr Process Corporation, Product Literature # 605-616-P.S., November 1993.

Behr Process Corporation, Correspondence/Facsimile to ARB staff, February 10, 1994.

Behr Process Corporation, Telephone conversation with ARB staff, February 3, 1994.

Deft Inc., Telephone conversation with ARB staff, February 4, 1994.

Deft Inc., Telephone conversation with ARB staff, February 17, 1994.

## DD. WOOD TOUCH-UP AND REPAIR

Proposed VOC Standard (1996): 95.0%

Product Description:

Wood touch-up and repair products are used to repair scratches, gouges, burns, and other damage to finished wood products such as furniture, cabinetry, and paneling. Depending on the depth and nature of the damage, wood touch-up and repair operations can comprise several steps, such as filling of gaps, coloring of the wood, restoring the grain pattern, and applying a final topcoat to seal the repaired area and to adjust the sheen of the finished surface to blend in with the rest of the furniture (Mohawk, video instructions).

Aerosol wood touch-up products are used in many of these repair processes, including the filling of scratches and gaps, color restoration, and sealing of repaired areas. Most products can be classified as toners, clear finishes, or sanding sealers (Mohawk video instructions; Mohawk, 2/8/94; Star, 2/8/94).

Toners are stains that restore the color of the damaged wood to the original color or change the color of a previously finished piece; for example, a toner may change a walnut finish into a mahogany look (Mohawk, 1993). They are used in repairs where a scratch or gouge removed the original coloring of the wood. Toners form a thin, semi-transparent coat on a previously colorless area, applying color to the underlying wood without concealing the grain (Mohawk, 2/8/94; Mohawk, 1993; Star, 2/8/94). They are typically lightly pigmented or low concentrate dyes that allow for a controlled build-up of color to match the original finish (Mohawk 3/17/94).

Clear finishes are non-coloring coatings used to restore superficial damage, such as scratches in wood finishes, but not in the actual wood. They are also sprayed over repaired areas to protect and seal the wood. Clear finishes may contain flattening agents which reduce the gloss level of the coating and can be used to adjust the sheen of a repaired area to match the surrounding surfaces (Mohawk, 2/8/94; Star, 2/8/94).

Sanding sealers are clear lacquers used to fill in scratches and voids in wood. The scratch or void is filled with a material that can be sanded to obtain a smooth surface. Sanding sealers provide the base for a toner or clear coat all of which may be applied in consecutive steps to restore the looks of the finished wood product (Mohawk 1993; Mohawk, 2/8/94).

As shown in the emissions and sales table, wood touch-up/repair products are a minor segment of the aerosol paint market, representing less than 1 percent of the aerosol paint category. Emissions from this category are also small, contributing less than 1 percent of the total emissions generated from all aerosol paints. Due to concerns about the confidentiality of the data expressed by one manufacturer, sales and emissions data are not listed in the table.

**Table IV-28**
**Wood Touch-up/Repair**
**Summary of Estimated 1992 Emissions and Sales**

| Number of Products | Total Category Sales (lbs/yr) | Market Share (%) | Emissions (Lbs/Yr) | Emissions (% of total) |
|---|---|---|---|---|
| 10 | — | < 1.0% | — | < 1.0% |

Source: Battelle Report, 1994.

Product Use:

Wood touch-up and repair products are used on wood furniture or wood products that have scratches, burns, gouges, or other damage. The surface areas in need of repair need to be clean, dry, and smooth (Mohawk, 1993). The spray application for wood touch-up and repair products included in this section is similar to other aerosol products as described under "Product Use" for flat paints. Typically repairs are primarily carried out by professionals, such as restorers or trained personnel in furniture stores and factories.

Product Marketing:

Wood touch-up and repair products are sold to professional furniture finishers, furniture repair shops, furniture factories and wood working stores. The products are sold directly from the manufacturer or through a distributor; according to the ARB Aerosol Paint Survey, all products sold were for industrial use only.

Only two manufacturers of aerosol wood touch-up and repair products were identified in the ARB Aerosol Paint Survey. These companies are Mohawk Finishing Products and Star Finishing Products. According to the ARB Survey, neither company is based in California. However, both companies identified themselves as small businesses in the survey.

Product Formulation:

Wood touch-up and repair products are generally low-solids, solvent-borne products utilizing hydrocarbon propellants. According to the ARB Aerosol Paint Survey, the sales weighted average for solids in this category is 7 percent and 92 percent for VOCs. No water-borne formulations were identified in the ARB Aerosol Paint Survey, and no exempt solvents were reported.

Since damaged areas in the wood need to blend in with the rest of the furniture and be invisible after the repair process, touch-up and repair coatings need to be low in solids and have the ability to flow smoothly onto the damaged surface. According to one manufacturer,

coatings with high-solids or lower VOC content do not achieve the fine spray and light coating necessary to make wood damage invisible (Mohawk, 3/1/94).

Toners typically have a VOC content of 90 percent or more and use solvents such as ketones, acetates, and aromatics. The resin content of toners is typically low, ranging between 7 to 10 percent (Star, 2/8/94; Mohawk, 2/8/94). A commonly used resin in toners is nitrocellulose. Like wood stains, the pigments in toners are natural earths, such as Umbers and Siennas. Toners may also contain dyes that are soluble in nitrocellulose (Mohawk, 2/8/94; Star, 2/8/94; Star, 2/21/94).

Clear finishes are similar to toners with regard to their low-solids and high-VOC content. Resins used in clear toners include nitrocellulose, acrylic, and polyurethane resins (Mohawk, 2/8/94). They also contain silicones which function as flattening agents and aid in adjusting the gloss level of the refinished wood surface (Mohawk, 2/8/94; Star, 2/8/94).

Sanding sealers are nitrocellulose based lacquers containing ketones, aromatics, and acetates. To make these lacquers easier to sand, a metallic salt, such as zinc stearate, is added. The zinc stearate provides some roughness to the otherwise slippery lacquer surface, thereby making it easier to sand (Star, 2/8/94; Mohawk, 3/1/94).

Proposed VOC Standard:

The standard proposed for wood touch-up and repair products is 95 percent VOC by weight, consistent with the Bay Area Air Quality Management District. Currently all products reported in the ARB Aerosol Paint Survey meet this limit. Therefore, the proposed standard acts will act as an emissions cap. At the present time, staff was unable to identify technology that would enable manufacturers to reformulate wood touch-up and repair products to lower VOC formulations. Emission reductions are expected to be achieved when the 1999 VOC standards become effective.

**REFERENCES**

Air Resources Board Aerosol Paint Survey, February 25, 1993.

Battelle Memorial Institute, Survey of Emissions from Solvent-Use-Volume I: Aerosol Paints, Prepared for California Air Resources Board, Contract A132-085, September 16, 1994.

Mohawk, Telephone conversation with ARB staff, February 8, 1994.

Mohawk, Telephone conversation with ARB staff, March 1, 1994.

Mohawk, Facsimile sent to ARB staff, March 17, 1994.

Mohawk, Product literature, "Furniture Touch-up and Repair Products," 1993.

Mohawk, Instructional video entitled, "Touch-up and Repair."

Star, Telephone conversation with ARB staff, February 8, 1994.

Star, Facsimile sent to ARB staff, February 21, 1994.

# V.

# TECHNICAL BASIS FOR PROPOSED REGULATION

## A. INTRODUCTION

In this chapter, we will explain the methods that are available to reformulate aerosol spray paints to meet the VOC limits established in the proposed regulation. The discussion will focus primarily on the initial (January 1, 1996) VOC standards because the methods for achieving compliance with the final (December 31, 1999) VOC standards will depend on the technological developments that occur between the time of this writing and the December 31, 1999 compliance date. In addition, as explained previously, the 1999 standards may be modified or postponed as a result of the required hearing on the commercial and technological feasibility of these standards.

We will discuss the reformulation techniques that are likely to be utilized by manufacturers in general terms, as they apply to all the aerosol paint categories covered by the proposed regulation. This is because the limited number of reformulation techniques that are likely to be utilized are expected to be applied to all of the individual product categories. The reformulation techniques most likely to be utilized by each individual product category are briefly mentioned in Chapter IV, under "Proposed VOC Standard."

Before discussing the methods of reformulating aerosol paints, some mention of the specialty coating limits is necessary. A quick glance at the VOC limits in the Table of Standards reveals that the "specialty coating" categories have much higher proposed VOC limits than the "general coating" categories. As explained in Chapter IV, we proposed higher VOC limits for the specialty coatings because of unique formulation differences that make these coatings less amenable to reformulation at this time. For example, some of the coatings must be applied in very thin films, such as floral sprays, and others are designed for specialized applications requiring the use of resins which require more VOC solvents to properly atomize them.

Many of the specialty products will require little or no reformulation to meet the 1996 VOC limits. However, the higher limits for these categories will not impact emissions reductions as much as the limits for the general coating categories because the specialty coating categories individually account for a very small share of the emissions from aerosol paints (Battelle, 1994).

## B. INITIAL 1996 VOC STANDARDS

The initial (January 1, 1996) VOC standards in the proposed regulation are expected to achieve, on average, a 12 percent reduction in VOC emissions from aerosol paints. These standards are similar to those currently effective in the Bay Area aerosol paint regulation. Therefore, the technology that is needed to formulate complying products to meet the initial VOC standards is known and available. For many companies, the initial limits will only require that they scale up their production of Bay Area products for the rest of California

Three basic reformulation methods, or a combination thereof, are available to reduce the VOC emissions from aerosol paints. The first method is to increase the solids content of the product, displacing some of the solvent in the formulation. The second method is to use a water-borne formulation in which water functions as one of the primary solvents. The final method is to replace some or all of the hydrocarbon propellants used in solvent-borne aerosol paints with hydrofluorocarbon 152a (HFC-152a). This method is not widely used now in part due to the cost of HFC-152a, but may be more cost effective in the future.

### High-solids formulations

We expect that most aerosol paints reformulated to comply with the initial VOC limits in the proposed aerosol paint regulation will switch to higher solids, solvent-borne formulations. This is because the manufacturers that have reformulated their products to meet the Bay Area Air Quality Management District's (BAAQMD's) aerosol paint regulation have primarily chosen this means of reformulating their products (Battelle, 1994 ).

Reformulating to a higher solids, solvent-borne formulation will reduce the VOC content in direct proportion to the increased amount of solids in the formulation. For example, a typical nonflat aerosol paint sold in California before the BAAQMD regulation was adopted was about 84 percent VOC and 16 percent solids (SCAQMD, 10/21/93 facsimile). Under the proposed ARB regulation, nonflat aerosol paints would be required to meet a 65 percent VOC level. At this VOC level, high solids solvent-borne formulations contain would contain 35 percent paint solids, more than double the solids content of the conventional product.

A potential advantage of high solids aerosol paints, beyond a reduction in VOC content, is that the increased paint solids may allow extended use of the product. This is based on the concept that a product with more paint solids can potentially cover more surface area. Although there is some disagreement within the aerosol paint industry about whether higher solids products result in greater coverage, some manufacturers advertise their higher solids products as premium products with greater coverage. For instance, product literature for one high solids product states that "tests show it may take up to five 16 ounce cans of many spray paints to equal one 20 ounce can of MRO [High Solids Industrial Protective Coating]" (Seymour of Sycamore, 4/92).

## TABLE VI-1

### Proposed Aerosol Coating Product VOC Standards
### Percent by Weight

| Aerosol Coating Category | 1/1/96 | 12/31/99 |
|---|---|---|
| **General Coatings** | | |
| Clear Coatings | 67.0 | 40.0 |
| Flat Paint Products | 60.0 | 30.0 |
| Fluorescent | 75.0 | 45.0 |
| Metallic Coatings | 80.0 | 50.0 |
| Non-Flat Paint Products | 65.0 | 30.0 |
| Primers | 60.0 | 30.0 |
| **Specialty Coatings** | | |
| Art Fixatives or Sealants | 95.0 | 70.0 |
| Auto Body Primers | 80.0 | 50.0 |
| Automotive Bumper and Trim Products | 95.0 | 75.0 |
| Aviation or Marine Zinc Primers | 80.0 | 70.0 |
| Aviation Propeller Coatings | 84.0 | 75.0 |
| Corrosion Resistant Brass, Bronze, Copper | 92.0 | 70.0 |
| Exact Match Finishes | | |
| Engine Enamel | 80.0 | 60.0 |
| Automotive | 88.0 | 60.0 |
| Industrial | 88.0 | 60.0 |
| Floral Sprays | 95.0 | 85.0 |
| Glass Coatings | 95.0 | 80.0 |
| Ground Traffic Marking Coatings | 66.0 | 40.0 |
| High Temperature Coatings | 80.0 | 55.0 |
| Hobby/Model/Craft Coatings | | |
| Enamel | 80.0 | 70.0 |
| Lacquer | 88.0 | 70.0 |
| Clear Metallic | 95.0 | 75.0 |
| Marine Spar Varnishes | 85.0 | 70.0 |
| Photograph Coatings | 95.0 | 70.0 |
| Pleasure Craft Finish Primer/ Surfacer/Undercoaters | 75.0 | 55.0 |
| Pleasure Craft Topcoats | 80.0 | 55.0 |

## TABLE VI-1 (continued)

**Proposed Aerosol Coating Product VOC Standards**
**Percent by Weight**

| Aerosol Coating Category | 1/1/96 | 12/31/99 |
|---|---|---|
| Shellac Sealers | | |
| Clear | 88.0 | 70.0 |
| Pigmented | 75.0 | 60.0 |
| Slip-Resistant Coatings | 80.0 | 70.0 |
| Spatter/Multicolor Coatings | 80.0 | 60.0 |
| Vinyl/Fabric/Leather/Polycarbonates | 95.0 | 70.0 |
| Webbing/Veil Coatings | 90.0 | 70.0 |
| Weld-Through Primers | 75.0 | 60.0 |
| Wood Stains | 95.0 | 75.0 |
| Wood Touch-Up/Repair/Restoration | 95.0 | 75.0 |

---

**Sell-Through - Section 94522(b):**

In this section, we explain the allowed "sell-through period" for noncomplying products manufactured prior to the VOC standards in the regulation. In section 94522(b), an eighteen-month "sell-through period" has been provided to allow noncomplying products to be sold, supplied, offered for sales, or applied after each of the effective dates specified in the regulation. The sell-through period will allow noncomplying products already in the distribution system to be sold and gradually replaced with the new complying formulations. This will help provide an orderly transition from the old noncomplying products to the new complying formulations, and minimize the economic impact on distributors and retailers due to product recalls or redistributions. Only those products manufactured prior to the standard effective day may be sold in California under this provision.

The sell-through period does not apply to the manufacturing of products for sale in California. Manufacturers are required to begin manufacturing their complying product formulations for California immediately after the VOC standards in the regulation become effective. In addition, the sell-through period does not apply to aerosol coating products that are sold within the BAAQMD and are subject to the provisions of BAAQMD Regulation 8, Rule 49, "Aerosol Paint Products." Finally, the sell-through period does not apply to any aerosol coating product which does not display on the product container or package the date on which the product was manufactured, or a code indicating such a date. This is necessary to allow the ARB to determine if a product was manufactured before the VOC standards specified in the regulation.

**Products Containing Methylene Chloride - Section 94522(c):**

This section applies to aerosol paints which contain methylene chloride and limits the amount of methylene chloride that can be used in an aerosol paint. According to section 94522(c), the VOC standards in the proposed regulation apply to the combined percent by weight VOC and methylene chloride. As described in more detail in Chapter IX, "Issues," this provision is necessary to remove the incentive to use methylene chloride, a toxic air contaminant, to comply with the proposed VOC standards in the regulation.

**Perchloroethylene and Ozone-Depleting Substances - Section 94522(d)(1) & (2):**

In this section, restrictions are placed on new uses of perchloroethylene and ozone-depleting substances. After the effective date of the regulation, new aerosol paint formulations subject to the regulation are prohibited from containing perchloroethylene, or any ozone-depleting substance identified by the U.S. EPA in the Federal Register under 57 FR 33754, July 30, 1993. However, this section does not apply to product formulations that were sold in California in 1992, or product formulations that were sold in California in 1992 and were reformulated to meet the table of standards, provided the content of perchloroethylene, or ozone-depleting substances does not increase. In effect, this allows existing products containing perchloroethylene or ozone depleting substances to continue to use these compounds at existing or lower levels, but prevents increased use of these compounds in aerosol paints. This provision was established to prevent the increased use of perchloroethylene or ozone-depleting substances when reformulating current products to lower VOC content. This is similar in format to the provisions established in the antiperspirants/deodorants regulation (Subchapter 8.5, Article 1, section 94502(c)) and comprehensive consumer products regulation (Subchapter 8.5, Article 2, section 94509(e)).

Currently, the only compound affected by this provision that is used in significant quantities in aerosol paint is 1,1,1-trichloroethane. Production of this compound is scheduled to be phased out by the United States Environmental Protection Agency due to its ozone depletion potential. Therefore, the impact of section 94522(d) is expected to be minimal. Nevertheless, the provision is necessary to prevent the potential increased use of harmful compounds when reformulating aerosol paints to comply with the proposed regulation.

**Multi-Component Kits and Aerosol Paints Made from Aerosol Containers of Propellant - Section 94522(e) and (f):**

In this section we discuss how "multi-component kits" and aerosol paints assembled by the end user are handled under the proposed regulation. A multi-component kit is a paint system in which two or more aerosol paints are sold together in one package, and both coatings are necessary to produce the finished coating. An example would be the paint systems designed to simulate granite or other stone finishes. Typically, these paint systems include a multicolor aerosol coating and a protective aerosol clear coating, with both

containers sold in a single package. Section 94522(e) requires that the total content of VOC and methylene chloride in such multicomponent kits must be less than or equal to the total content of VOC and methylene chloride that would be allowed in the kit had each product met the VOC standards in the proposed regulation. This essentially means that the VOC content of the products in the kit can be "averaged," with a product above the VOC limit being offset with a products below the VOC limit. An equation is provided to aid in determining compliance with this provision.

Aerosol paints assembled by the end user include systems where bulk paint is added to aerosol cans containing propellants and solvents with the aid of a specialized apparatus which forces the paint into the aerosol container. Another system allows the attachment of a container of paint to an aerosol can of propellant, which aerosolizes the paint. Section 94522(f) requires that aerosol paints assembled by the paint end user meet the same VOC limits as other aerosol paints. This is necessary to prevent circumvention of the proposed VOC standards in the regulation.

**Hearing on the Technological and Commercial Feasibility of the December 31, 1999 VOC Standards - Section 94522(g):**

As mandated by recent legislation, this section requires that the ARB hold a public hearing prior to December 31, 1998 to review the technological and commercial feasibility of the December 31, 1999 standards. During the hearing, manufacturers and ARB staff will present testimony and evidence regarding the 1999 standards. Technological and commercial feasibility refers to the ability to manufacture products that will meet the basic market demand for a particular product category (see ARB Phase II Consumer Products Staff Report). If the Board determines that it is not technologically or commercially feasible to achieve one or more of the specified VOC limits by December 31, 1999, then an extension of up to five years may be granted. The Board will also determine the most stringent interim limits that will be applicable during any extension of the time granted. The Board may also modify the final compliance limits as appropriate provided the final compliance limits achieve at least a 60 percent reduction in VOC emissions resulting from the use of aerosol coatings, calculated from the 1989 baseline year.

**Provision for Lacquer Aerosol Coating Products - Section 94522(h):**

In this provision, pigmented lacquers are granted a two year, 80 percent VOC standard. After January 1, 1998, all these products must meet either the flat or non-flat standard of 60% or 65% VOC respectively. However, pigmented lacquers with a date of manufacture indicating that they were produced prior to January 1, 1998 may be sold for an additional eighteen months. This provision does not apply to any lacquer products sold, supplied, offered for sale, applied or manufacturerd for use in the BAAQMD that are subject to BAAQMD Rule 8-49. It also does not apply to any clear lacquer aerosol coatings.

## D. EXEMPTIONS (SECTION 94523)

**Specific Exempt Products - Section 94523(a):**

Since the proposed regulation is intended to apply to aerosol paints and related products, several aerosol products are specifically proposed for exemption. These products while sometimes could be considered a type of "coating," are formulated very differently than an aerosol paint. They are lubricants, mold releases, automotive underbody coatings, electrical coatings, cleaners, belt dressings, anti-static sprays, layout fluids and removers, adhesives, maskants, rust converters, dyes, inks, and leather preservatives or cleaners.

**Products Manufactured for Use Outside of California - Section 94523(b):**

The proposed regulation does not apply to any aerosol coating product manufactured in California for shipment and use outside of California. This exemption allows manufacturers to continue to produce noncomplying products within the State boundary if the products are intended for use in areas where the Table of Standards do not apply.

**Sales and Distribution - Section 94523(c):**

This provision states that the manufacturer or distributor will not be held responsible for aerosol paints sold, supplied, or offered for sale in California as long as they can demonstrate that the products were intended for shipment and use outside of California, and that they took reasonable prudent precautions to assure that the products were not distributed to California. This is to allow companies to use distributors in California if the product is to be shipped, for instance, to other West Coast states or other countries. This provision does not apply to aerosol coating products that are sold, supplied, or offered for sale by any person to retail outlets in California, since it is clear that the product is intended to be sold in California.

**Noncommercial Uses of Aerosol Paints - Section 94523(d):**

In this section an exemption is provided for noncommercial applications (uses) of aerosol paints. Our statewide consumer product regulation did not apply to consumer product users. However, this regulation does apply to aerosol coatings users. This exemption for noncommercial users is provided to allow consumers to use noncomplying aerosol paints purchased prior to the effective dates of the VOC standards proposed in the regulation. These products may be stored in households beyond the 18-month sell-through period provided in the regulation. Additionally, this provision will allow consumers to legally use noncomplying products that they may have purchased for their personal use while traveling out-of-state. We did not extend this provision to commercial users because there is the potential for these users to purchase large quantities of noncomplying product and use them within California.

## E. ADMINISTRATIVE REQUIREMENTS (SECTION 94524)

**Most Restrictive limit - Section 94524(a):**

Many aerosol coating products are labeled for more than one use, and may be subject to more than one aerosol paint VOC standard. In these cases, the "most restrictive limit" section requires that the lowest applicable standard shall apply. For example, an art fixative or sealant (with a 95 percent VOC limit) also advertised for use as a corrosion resistant brass coating product (with a 92 percent VOC limit), would be subject to the 92 percent VOC limit specified for corrosion resistant brass coatings. This provision eliminates confusion about which VOC limit applies to multiple use products. It is also intended to prevent a company from relabeling its product such that it would fall under a category having a higher VOC standard and thus to avoid complying with the applicable lower VOC limit.

An exception is provided for cases where an aerosol coating product is subject to both a general and specialty VOC limit and it meets all the criteria of the specialty VOC category. In this case, the specialty VOC limit shall take precedence over the general VOC limit. For example, a fluorescent ground marking coating which meets all the criteria of a ground marking coating would be subject to the 66 percent VOC limit specified for "ground traffic/marking coatings," instead of the 75 percent VOC limit for fluorescent coatings. Similarly, an auto body primer which meets all the criteria of this category (including being labeled **exclusively** for use on vehicle bodies) would be subject to the 80 percent VOC limit for "auto body primers," rather than the 60 percent VOC limit for general use primers.

**Labeling Requirements - Section 94524(b):**

This section specifies how aerosol paints must be labeled. No later than three months after the effective date of the regulation, aerosol coating products subject to the VOC standards shall display the following information on each product:

- the maximum VOC content of the product as specified in the Table of Standards;
- the aerosol coating category or an abbreviation; and
- the day, month, and year when the product was manufactured, or a code indicating such a date.

In addition, if the aerosol coating is included in an alternative control plan approved by the ARB, and the product exceeds the applicable VOC standard, then the product must also be labeled with "ACP" or "ACP Product." The VOC content and product category are required as an aid to compliance inspectors which will be testing products from store shelves to determine if the VOC content and other requirements of the regulation are being met. The VOC content and product category information will help inspectors determine if

manufacturers have chosen the appropriate product category and VOC content for their products.

The manufacturing date (or a code indicating the date) is required to allow compliance inspectors to determine if a noncomplying product was manufactured prior to the effective date of the VOC standards. In such cases, the product has an 18-month sell-through period. If a noncomplying product was manufactured after the effective date of the VOC standards or displays no manufacturing date, then the product is not provided with a sell-through period. If a manufacturer uses a code to indicate the date of manufacture, an explanation of the code must be filed with the Executive Officer of the ARB prior to the use of the code.

**Reporting Requirements - Section 94524(c):**

This section explains the reporting requirements in the proposed regulation. The requirements are necessary to maintain a current mailing list, conduct a survey of product sales and composition, and to evaluate the commercial and technological feasibility of the December 31, 1999, VOC standards.

**Information for Mail List**

Under section 94524(c)(1), the "**responsible party**" for an aerosol paint (the company, firm, or establishment which is listed on the product's label) is required to submit the following information to the ARB no later than 90 days after the effective date of the regulation:

- company name;
- mailing address;
- contact person; and
- telephone number of the contact person.

In addition, for responsible parties who do not manufacture their own aerosol paints, the responsible party is required to supply the information above for the **manufacturer** of their products.

**Research and Development Efforts to Achieve 1999 VOC Standards**

The information required under section 94524(c)(2) is necessary to allow the ARB to evaluate the commercial and technological feasibility of the December 31, 1999 VOC standards. The required information includes the following:

- by January 1, 1998, the information required in the section below, "Product Sales and Composition," for 1997; and

- by January 1, 1998, a written update of the research and development efforts

undertaken to achieve the December 31, 1999 VOC limits. This report will include detailed information about the raw materials and valve systems developed, the testing protocols used, and the results of the testing. This information is required for those efforts related to reformulation of "general category" aerosol coating products. For specialty aerosol coatings, the regulation includes a provision requires manufacturers to supply similar data within 90 days of a written request by the ARB.

**Product Sales and Composition Survey**

Under sections 94524(c)(2) and 94524(c)(3), the manufacturer or responsible party (depending on which is notified) must submit the following information to the ARB within 90 days for each product they manufacture under their name or another company's name:

- brand name of the product;
- upon request, a copy of the product label;
- owner of the trademark or brand names;
- product category;
- annual California sales in pounds per year and the method used to calculate California annual sales;
- percent by weight VOC, water, solids, propellant, and any compounds exempt from the definition of VOC as specified in section 94521;
- identification of each product brand name as a "household" or "industrial" product; and
- any other information necessary to determine the emissions from aerosol coating products.

This information will aid staff in tracking the progress of manufacturers in meeting compliance and in modifying standards if necessary. In addition, it will allow staff to track emissions from aerosol paints and evaluate the effectiveness of the regulation.

A provision is also included which specifies that confidential information submitted under section 94524 will be treated according to sections 91000 to 91022, Title 17, CCR. These sections are the ARB regulations which specify how confidential information (e.g., trade secrets) must be handled by the ARB. Basically, these regulations contain detailed procedural safeguards to insure that confidential information is not disclosed to the public. If a company believes that any information it may provide to the ARB is a trade secret or otherwise entitled to confidential treatment, the regulations state that the company must identify the information as "confidential" at the time of submission to the ARB, and must provide the name, address, and telephone number of the individual to be consulted if the ARB receives a request that the information be disclosed. If the ARB receives such a request, the ARB will ask the company to describe why the information should be kept confidential. The regulations provide that no information identified as confidential will be disclosed unless the ARB makes a formal determination, in accordance with the procedures described in the

regulations, that the information does not qualify for confidentiality protection under California law.

## F. VARIANCES (SECTION 94525)

This section describes the procedures that are required to be granted a variance from the VOC standards in the regulation. Under section 94525, a person who cannot comply with the VOC standards in the regulation because of extraordinary reasons beyond the person's reasonable control may apply in writing for a variance. The variance application shall state the specific reasons why a variance is sought, the proposed date(s) by which compliance with the standards will be achieved and the methods by which compliance will be achieved.

After receiving a complete variance application, the Executive Officer will hold a public hearing to determine whether, under what conditions, and to what extent, a variance from the standards is necessary and will be permitted. At the hearing, the variance applicant will be asked to present evidence that demonstrates that they are eligible to receive a variance. All of the following findings must be made in order to grant to variance:

- Compliance with the standards would result in extraordinary economic hardship, due to reasons beyond the reasonable control of the applicant.
- The public interest in mitigating the hardship to the applicant outweighs the public interest in avoiding any increased emissions which would result from issuance of the variance.
- The methods to achieve compliance can reasonably be implemented and will achieve compliance as expeditiously as possible.

If a variance is granted, the variance order will specify a final compliance date by which compliance with the standards will be achieved and the increments of progress necessary to assure timely compliance. A variance's duration will be determined by the Executive Officer and can also be terminated, upon failure to comply with any condition of the variance.

## G. TEST METHODS (SECTION 94526)

This section briefly describes the test methods which are to be used to determine compliance with the requirements of the proposed regulation. Alternative test methods may also be used if they are shown to be accurate and are approved by the Executive Officer. To obtain copies of test methods or to receive information on how to submit a request for the approval of an alternative test method, the ARB's Monitoring and Laboratory Division should be contacted at the following address: Air Resources Board, Monitoring and Laboratory Division, P.O. Box 2815, Sacramento, CA 95812.

## VOC Content

Two test methods are specified in the proposed regulation to determine the percent by weight VOC. The test method used depends on whether the aerosol paint is solvent-borne or water-borne. Additionally, volatile compounds exempt from the definition of VOC, except water and the propellant HFC-152a, must be determined as described in the following section.

For solvent-borne coatings, the test method specified is Bay Area Air Quality Management District Method 35, "Determination of Volatile Organic Compounds (VOC) in Solvent Based Aerosol Paints," as amended January 19, 1994. To summarize this test method, a weighed amount of coating is sprayed from an aerosol container into a glass tube assembly. The assembly is placed in an oven and heated at 110° C for one hour. The assembly is then taken out of the oven, allowed to cool and weighed again. The percent volatile is calculated from the loss in weight in the assembly. Procedures utilizing gas chromatography are also included in this test method to subtract out the amount of the non-VOC propellant HFC-152a from the VOC content, if it is included in the formulation.

Water-borne aerosol paints are to be analyzed according to the "Standard Test Method for Determination of Weight Percent Volatile Content of Water-Borne Aerosol Paints," November 15, 1992 (ASTM D 5325-92). In this test method, the propellant is first removed from the can. The remaining "liquid concentrate" is then tested to determine the weight percent volatile content by oven drying a portion of the liquid for one hour at 110° C. The water content is determined either by direct injection gas chromatography or by Karl Fischer titrations. This test method indirectly determines the VOC content by subtracting the water content from the percent volatile content. The exempt compound content is determined as described below.

### Exempt Compounds

For exempt compounds which are present in the liquid concentrate, ARB Method 432, "Determination of Dichloromethane and 1,1,1-Trichloroethane in Paints and Coatings," is specified. This method is to be utilized after the propellant is removed using ASTM Method D 5325-92. The test method essentially includes mixing the test material with a diluent compound and an internal standard in known gravimetric proportions, removing the solids by centrifuge, if practical, and determining the weight concentration of specific compounds in the test material by gas chromatography. This test method is largely derived from ASTM D 4457-85. This method may also be approved by the Executive Officer for measuring other specific solvents if it can be demonstrated that an accurate concentration can be obtained.

Carbon dioxide, nitrogen, and the perfluorocarbon classes will be analyzed as exempt compounds only if the manufacturer specifies which individual compounds are used in the product formulation. The manufacturer must also identify test methods which can be used to determine the amounts of these compounds and receive approval from the Executive Officer

for each test method. This is necessary because there are no test methods at this time to measure these compounds. However, efforts are currently underway at the Bay Area AQMD, South Coast AQMD, ARB, and EPA to develop test methods for aerosol coating products which contain exempt compounds as propellants.

**Metal Content**

A test method is included in the proposed regulation because there is a minimum metal content (0.5 percent elemental metallic pigment by weight) to qualify as a metallic coating. To determine the metal content in aerosol coating products, South Coast AQMD Method 311, "Analysis of Percent Metal in Metallic Coatings by Spectrographic Method," June 1, 1991, is specified. This test method is found in the South Coast AQMD "Laboratory Methods of Analysis for Enforcement Samples" manual. Prior to conducting this test method, the propellant is to be removed following the procedures in ASTM Method D-5325-92, described above. After removal of the propellant, a premeasured sample of material is "wet ashed" with sulfuric acid in an electrical furnace at 500° C until all the carbon is removed. A predetermined portion of the ash sample is then mixed with a predetermined portion of pure graphite as determined by a spectrograph. This sample is then excited by a controlled direct current source. The light intensity from the sample excitation is reduced to give an exposure with a suitable background and is then integrated on photographic film. The concentration of the metals in the sample is determined by comparing the densities of the spectrum lines produced by the sample with known standards.

**Specular Gloss**

A test method is included in the proposed regulation for specular gloss in order to differentiate "flat" coatings from higher gloss "nonflat" coatings. ASTM D 523-89, "Standard Test Method for Specular Gloss," March 31, 1989, is specified to determine specular gloss. Specular gloss refers to the capacity of a surface to reflect light in the mirror direction. This test method covers the measurement of the specular gloss of nonmetallic specimens for glossmeter geometries of 60°, 20°, and 85°. The test method basically consists of an incandescent light source which furnishes an incident beam to a test specimen. The reflected beam from the test specimen is received by a receptor which is a photosensitive device that responds to visible radiation. At least three readings are taken on a 3 by 6 inch area of the test specimen. The readings are made in gloss units. Measured gloss ratings are obtained by comparing the specular reflectance from the test specimen to that from a black glass standard.

**Acid Content**

A test method is included in the proposed regulation for determining the acid content of a coating due to the requirement that "rust converters" contain at least 0.5 percent acid by weight. Prior to conducting this test method, the propellant is to be removed following the procedures in ASTM Method D-5325-92, described above. The test method specified is ASTM D 1613-91, "Standard Test Method for Acidity in Volatile Solvents and Chemical

Intermediates Used in Paint, Varnish Lacquer, and Related Products." This test method consists of a basic titration in which a basic solution of sodium hydroxide is added to a diluted mixture of the acidic paint formulation in the presence of an indicator solution.

**Lacquer Test Method**

A test method is included in the proposed regulation to allow identification of lacquer coatings. This test method is included because a provision has been included in the proposed regulation allowing lacquer aerosol coatings an 80 percent VOC content for two years after the January 1, 1996 standards go into effect. It is therefore necessary that it be possible to distinguish between lacquers and enamels, which would be subject to other standards in the regulation. This test method can also assit in enforcement of the Hobby/Model/Craft enamel and lacquer categories.

## H. SEVERABILITY (SECTION 94527)

This section states that the VOC standards and other provisions of the regulation are severable. This means that if a lawsuit is brought and a particular VOC standard or provision is held to be invalid, the remaining regulatory standards and provisions will remain in effect and continue to be fully valid.

## I. FEDERAL ENFORCEABILITY (SECTION 94528)

This provision has been included in order to meet the requirements of the federal Clean Air Act (CAA). In order to meet CAA requirements, after the aerosol paint regulation is adopted by the Board it will be submitted to the United States Environmental Protection Agency for inclusion in the California State Implementation Plan (SIP). The SIP is basically California's plan for complying with the requirements of the CAA (e.g., the attainment and enforcement of the federal ambient air quality standards). Once the U.S. EPA approves a regulation for inclusion in the SIP, the requirements of the regulation will have the force and effect of federal law and may be enforced by the U.S. EPA in the federal courts.

To be included in the SIP, a submittal must meet a number of legal and technical criteria that have been established by the CAA and U.S. EPA regulations. The U.S. EPA has interpreted these criteria to require the rejection of a regulation as a SIP submission if the regulation could conceivably allow an abuse of discretion by state air pollution officials (i.e., the approval of variances or test methods in situations where the U.S. EPA believes that such approval is not warranted; see U.S. v. Ford Motor Company, (W.D.Mo 1990) 31 ERC 1287, 736 F.Supp. 1539, for a discussion of the legal problem faced by the U.S. EPA).

To avoid this problem and allow for approval of the aerosol paint regulation as a SIP revision, the "Federal Enforceability" language of section 94528 has been included in the regulation. This language basically clarifies that the U.S. EPA retains its power under the CAA to independently enforce all provisions of the aerosol paint regulation, and is not bound

by the ARB's approval determinations with respect to variances and test methods. Similar language was previously included in the antiperspirant and deodorant regulation (see section 94506.5, Title 17, CCR) and the consumer products regulation (see section 94517, Title 17, CCR) for the same reasons discussed above.

The "Federal Enforceability" language also specifies that a person who has been granted a variance from a provision of the aerosol paint regulation can request that the variance be submitted to the U.S. EPA as a revision to the SIP. If the variance meets the requirements of the CAA, the regulation provides that the ARB Executive Officer will then submit the variance to the U.S. EPA as a SIP revision.

# VII.

## ENVIRONMENTAL IMPACTS

### A. SUMMARY OF ENVIRONMENTAL IMPACTS

ARB staff has conducted an analysis of the potential environmental impacts of the proposed aerosol paint regulation. Based on our analysis, we have determined that the aerosol paint regulation will have not have any significant adverse environmental impacts. Rather, the regulation will have positive environmental impacts. We conducted our analysis with consideration of potential impacts on air quality, water quality, and landfill loading. The following environmental analysis provides the basis for our findings.

### B. LEGAL REQUIREMENTS APPLICABLE TO THE ANALYSIS

Both the California Environmental Quality Act (CEQA) and Board policy require the ARB to consider the potential adverse environmental impacts of proposed regulations. Because the ARB's program involving the adoption of regulations has been certified by the Secretary of Resources (see Public Resources Codes section 21080.5), CEQA allows the ARB's environmental analysis to be included in the ARB Staff Report or Technical Support Document in lieu of preparing an environmental impact report or negative declaration. In addition, the ARB will respond in writing to all significant environmental points raised by the public during the public review period or at the Board hearing. These responses will be contained in the Final Statement of Reasons for the aerosol paint regulation.

On January 1, 1994, the new requirements of SB 919 became effective (Stats. 1993, Chapter 1131). SB 919 amended CEQA by adding new Public Resources Code section 21159. With respect to the aerosol paint regulation, Public Resources Code section 21159 requires that the environmental analysis conducted by the ARB include, at a minimum, all of the following: (1) an analysis of the reasonably foreseeable environmental impacts of the methods of compliance, (2) an analysis of reasonably foreseeable feasible mitigation measures, and (3) an analysis of reasonably foreseeable alternative means of compliance with the regulation.

Our analysis of the reasonably foreseeable environmental impacts of the methods of compliance is presented in Sections C and D below. In fulfillment of the requirement for an analysis of reasonably foreseeable feasible mitigation measures, we have determined that no mitigation measures are necessary because we have identified no significant adverse environmental impacts associated with the aerosol paint regulation. However, we will continue to

monitor implementation of the regulation to insure that no adverse impacts occur in the future. In fulfillment of the requirement for an analysis of the reasonably foreseeable alternative means of compliance with the regulation, alternatives have been studied and no realistic scenarios have been found that would serve as alternatives to reformulation of aerosol products, except for the Alternative Compliance Plan (ACP). As part of this regulatory action it has been proposed to amend the ACP to include aerosol paints. Our analysis of the ACP has concluded that no adverse environmental impacts will occur as a result of amending the ACP to include aerosol paints. This analysis is set forth in Chapter X of this document.

## C. EMISSIONS REDUCTIONS AND OTHER POTENTIAL ENVIRONMENTAL IMPACTS

The primary environmental impact of the proposed aerosol paint rule is a reduction in the VOC emissions from aerosol paints. Since VOCs are involved in the formation of tropospheric ozone, any reduction in VOC emissions is expected to result in a positive impact on air quality and public health. The proposed rule contains initial limits, effective January 1, 1996, of between 60 percent and 95 percent by weight volatile organic compounds (VOC), depending on the coating category. As calculated from the 1992 aerosol coatings survey conducted by the Air Resources Board, plus additional surveys received after the Battelle Report was completed, if the first tier standards were implemented in 1992 a 12 percent reduction in emissions would result. If this percent decrease is applied proportionally to the projected 1996 emissions of 27 tons/day, the aerosol paint regulation will result in emissions reductions of approximately 3 tons/day. This 27 tons/day emission value for 1996 was determined by assuming that the 1996 sales volume will be the same as 1989 sales volume, but the average VOC content will drop from the 1989 level of 85 percent to the 77 percent determined in the Battelle Report.

The second tier, with an effective date of December 31, 1999, specifies limits of between 30 percent and 85 percent and is intended to achieve a 60 percent reduction in VOC emissions from the 1989 ARB emissions inventory. As mentioned previously in this document, limits were determined by decreasing the average 1989 VOC content of aerosol paints (by category) by varying amounts such that overall average is decreased by 60 percent. Therefore, assuming that similar proportions of aerosol coatings are available and that sales in the year 2000 are the same as sales in 1989, the second tier aerosol paint standards will result in a 60 percent reduction from the 1989 baseline of 30 tons/day, or emissions reductions of approximately 18 tons/day. It should be emphasized that, as mentioned throughout this document, the December 31, 1999 standards will be subject to a hearing in 1998 to determine their technological and commercial feasibility. If the standards are found to not be feasible, then they may be postponed for not more than five years.

These reductions in VOC emissions are the primary positive environmental impacts to be gained from this proposed regulation. In regard to our State Implementation Plan (SIP) commitments under the Federal Clean Air Act and our requirements under AB 1890, see Chapter II, "Emissions," and "Chapter IX, "Issues."

**Table VII-1**
**Summary of Emissions and Emission Reductions from the Proposed Standards**

| Coating Type | Total Emissions (lbs/year) X 1000 | Emission Reductions (lbs/year) X 1000 | Percent Emission Reductions |
|---|---|---|---|
| Clear Coatings | 546 | 115 | 21 |
| Flat Paint Products | 1,238 | 278 | 22 |
| Fluorescent | 211 | 4 | 2 |
| Ground Traffic Marking Coating | 400 | 4 | 1 |
| Metallic Coatings | 733 | 50 | 7 |
| Non-Flat Paint Products | 7,682 | 1,355 | 18 |
| Primer | 678 | 125 | 18 |
| Vinyl/Fabric/Leather/ Polycarbonate | 74 | 0 | 0 |
| Engine Exact Match | 181 | 7 | 4 |
| Automotive Exact Match | 573 | 4 | 1 |
| Industrial Exact Match | 72 | 0 | 0 |
| Auto Body Primer | 645 | 11 | 2 |
| Automotive Bumper and Trim | 67 | 0 | 0 |
| Glass Coating | 6 | 0 | 0 |
| High Temperature Coating | 329 | 22 | 7 |
| H/M/C Enamel | 102 | 1 | 1 |
| H/M/C Lacquer | 16 | 0 | 0 |
| H/M/C Clear, Metallic | 410 | 0 | 0 |
| Spatter Coating | 128 | 0 | 0 |
| Other | 184 | 21 | 11 |
| Other Specialty Coatings | 495 | 1 | 0 |
| Grand Total (tons/day) | 14,770 (20.2) | 1,998 (2.7) | 12* |

* This value includes the additional emissions that will occur as a result of the lacquer provision (section 94522(h)), which is scheduled to expire on January 1, 1998.

## Impact on Global Warming

The potential impact of this regulation on global warming warrants an evaluation of possible impacts from the use of particular compounds in aerosol paints. Of primary concern are the hydrofluorocarbons (HFCs). HFCs are non-chlorinated methane and ethane derivatives which contain hydrogen and fluorine. As HFCs are not considered VOCs, they are therefore considered possible replacements for hydrocarbon propellants in aerosol paint. It is generally accepted that HFCs, because they lack chlorine, probably do not significantly contribute to ozone depletion. Since they are not considered to be ozone depleters, HFCs are not scheduled for phase out under the Federal Clean Air Act requirements. However, these compounds do absorb infrared energy and can therefore potentially contribute to global warming when emitted in significant quantities. The primary HFC of interest to aerosol paint formulators is HFC-152a (1,1-difluoroethane).

Although HFCs are presently quite expensive when compared to hydrocarbons (HFCs are about $2.00 per pound, versus hydrocarbon propellants at $0.15 to $0.20 per pound) making their use cost-prohibitive, these price differentials are subject to change. We have determined that HFC-152a may be used to a minor extent in aerosol paint formulations for the 1996 standards, and may be more extensively used to comply with the standards effective in 1999. However, even use of HFC-152a as a complete replacement for hydrocarbon propellants in aerosol paints would have a negligible effect on global warming. This is because only a few tons per day of HFCs would be emitted to the atmosphere (calculated as 26 percent of the total tons per day of aerosol product, assuming that hydrocarbon propellant is substituted on a one-to-one basis with HFC-152a). By comparison, nearly 100 million tons per day of carbon dioxide, the primary man-made greenhouse gas of concern, is emitted into the atmosphere from existing processes.

As mentioned above, carbon dioxide is the primary man-made greenhouse gas of concern. Although carbon dioxide has found some use as a replacement propellant in consumer products, it is not considered a likely replacement for hydrocarbon propellants in the near future. Therefore, its use in aerosols due to the proposed regulation will have no impact on global warming. In addition, most carbon dioxide used as a propellant is a recycled by-product of existing processes and therefore does not increase global warming due to carbon dioxide.

## Impact on Stratospheric Ozone Depletion

Stratospheric ozone shields the earth from harmful ultraviolet (UV) radiation. Its depletion causes higher UV radiation levels at the earth's surface. The U.S. EPA has estimated that for every one percent decrease in stratospheric ozone, there would be approximately 20,000 additional skin cancer cases. In addition to the increase in skin cancer incidence, an increase in eye cataracts and suppression of human and animal immune systems may also occur because of the increase in UV radiation (40CFR Part 82, 8/12/88). Since the reactions which form tropospheric ozone are driven by UV radiation, it is conceivable that a

reduction in stratospheric ozone may also result in an increase in photochemical smog formation because of the increased UV radiation.

Compounds such as chlorofluorocarbons (CFCs) and other halocarbons (e.g. halons, 1,1,1-trichloroethane (1,1,1-TCA), and carbon tetrachloride) cause the destruction of the UV protective stratospheric ozone. These compounds are generally very stable and do not degrade appreciably in the troposphere. Instead, they gradually diffuse into the stratosphere where they release chlorine or bromine atoms. It has been estimated that each chlorine atom released can remain in the stratosphere long enough to react with 10,000 molecules of ozone. Bromine atoms released from halons are even more reactive than chlorine atoms.

Staff is not aware of any ozone-depleting materials other than 1,1,1-trichloroethane (TCA) that are used in aerosol paint. This chemical is classified by the U. S. EPA as a Class I ozone-depleting compound. Class I compounds have the highest ozone-depletion potential, a measure of the relative ability of a compound to deplete the stratospheric ozone layer. Approximately 190,000 pounds of TCA were emitted from aerosol paints in 1992 (Battelle Report, 1994). However, we do not expect the use of TCA to continue. According to the Montreal Protocols and the 1990 Federal Clean Air Act amendments, all ozone depleting compounds, including 1,1,1-TCA, are scheduled for production phase-out by 1995. Because of the regulatory pressure on ozone-depleting compounds generally, and the production phase-out of 1,1,1-TCA specifically, we do not expect any adverse impact on the stratospheric ozone layer due to the aerosol paint regulation. In addition, the aerosol coatings regulation specifically prohibits any increased use of ozone-depleting compounds in aerosol coatings.

Impacts on Water Quality and Solid Waste Disposal

We do not expect an adverse impact on water quality or solid waste disposal from the aerosol paint regulations. There could be some impacts on waste water and solid waste disposal should there be a large-scale conversion from aerosol paints to brush-on paints, although whether those impacts would be positive or negative is difficult to determine. However, as will be discussed in later sections, we do not expect there to be a conversion to brush-on paints, water-borne or solvent-borne, from aerosol paints. This is because there are acceptable, complying aerosol coatings available in each category. Additionally, we have identified a potential positive impact on waste disposal from the proposed regulation. The higher solids formulations that result from this regulation will, because of a higher "actives" level in each can, potentially result in the use of fewer cans (Seymour of Sycamore, Inc. "Industrial Coatings Maintenance Repair Operations"). This will have a positive environmental impact as there will likely be fewer cans disposed of in landfills.

## D. OTHER POTENTIAL ENVIRONMENTAL IMPACTS

Following is a discussion of questions regarding potential negative environmental impacts that some industry members believe may occur as a result of the aerosol paint regulation.

Will increased VOC emissions result if consumers switch to high-VOC solvent-borne brush-on coatings from aerosols?

Some members of industry contend that, if a regulation limiting the VOC content in aerosol paints goes into effect, consumers will switch to solvent-borne, non-aerosol coatings. Because non-aerosol coatings sold in volumes of one quart (sometimes one liter) or less are presently exempt from district VOC regulations they believe that there will be an increase in VOC emissions from their use, as consumers may use an almost unlimited amount of solvent for thinning and clean-up of these coatings. However, we believe that this reasoning is faulty and we do not expect this environmental impact to occur.

We have determined that there is no incentive for consumers to convert from aerosol paints to brush-on paints as there are aerosol coatings complying with the first tier standards (effective January 1, 1996) presently available in all categories. The second tier standards (effective December 31, 1999) are subject to a hearing by the Air Resources Board on or before December 31, 1998 to determine "...the technological or commercial feasibility of achieving full compliance with the final limits by December 31, 1999." If the Air Resources Board determines that a 60 percent reduction in emissions is not technologically and commercially feasible, then an extension of not more than five years will be granted. Because of this feasibility review, we expect complying aerosol coatings to be available when the second tier standards go into effect. Therefore, as found with the first tier standards, we do not expect a switch to high-VOC solvent-borne brush-on coatings in response to the second tier standards.

For the reasons discussed above, we do not believe that there will be a conversion to brush-on solvent-borne coatings upon implementation of this rule. However, our research indicates that even if consumers do switch to brush-on coatings, there should be no increase in emissions. Some industry spokespeople assert otherwise. The National Paint and Coatings Association (NPCA) Spray Paint Manufacturers Committee Air Quality Task Force, in presentations to the Bay Area Air Quality Management District (BAAQMD) and the South Coast Air Quality Management District (SCAQMD) during consideration of those district's proposed aerosol rules, argued that "for most uses, aerosol spray paint is more VOC-efficient than alternative methods of painting." In their report, entitled "Proposal for the Reduction of VOC Emissions from Aerosol Spray Paint" (NPCA, 1990), NPCA asserts that the use of alternatives to aerosol coatings may actually result in greater emissions than would result from the use of aerosol coatings.

This argument was made by estimating the amount of VOCs emitted during the coating of a one square foot area by application of five grams of coatings solids from an aerosol paint, a brush-on paint, and a spray-gun applied paint. In this report, with results as shown in Table VII-2 below, it is calculated by NPCA that, from a typical aerosol paint containing 85 percent VOCs by weight, 28 grams of VOCs will be emitted from the application of 5 grams of paint solids. They predict no emissions from use of the aerosol paint due to thinning or clean-up. The solvent-borne brush-on coating is estimated to emit 14 grams of VOCs from 5 grams of paint solids and 57 grams of VOCs from two ounces of clean-up solvent, resulting in 71 grams of VOCs emitted. The comparison with conventional spray coating assumes that four ounces of enamel are used (as opposed to the one ounce of paint used for brush-on), and the enamel is thinned with one ounce of thinner, and four ounces of solvent are used for clean-up, resulting in 199 grams of VOC emitted. Because it is unlikely that such a small volume of paint (less than half a pint) would be used in a standard spray gun, in fact, it would not be sufficient to even prime many traditional spray guns (Binks Manufacturing Company, 1/11/95), we will assume that it applies to gravity fed spray guns.

**Table VII-2**

**NPCA calculations as to theoretical emissions from 5 grams of aerosol, brush-on, and spray-on coatings**

| | Grams VOCs from 5 grams of coating solids | Grams VOCs from Thinning | Grams VOCs from Clean-up | Total grams VOCs |
|---|---|---|---|---|
| Aerosol Coating | 28.5 | 0 | 0 | 28.5 |
| Brush-on Coating | 14 | 0 | 57 | 71 |
| Spray-on Coating | 57 (20 g coating) | 28.5 | 114 | 199.5 |

Table VII-3 shows the Air Resources Board staff's calculations as to theoretical emissions from five grams of aerosol and brush-on coatings and the equivalent quantity of spray-on coating. You can see from this table and from Table VII-2 that if the VOCs from the paint alone are taken in to consideration, even use of a relatively high-VOC brush-on coating results in far less emissions than a typical aerosol product; 14 grams for the brush-on coating versus 28 grams for the aerosol coating. However, NPCA has estimated that, for the brush-on coatings, two ounces of clean-up solvent would be used to clean the brush, resulting in 57 additional grams of VOCs emitted. In this scenario it is assumed that all of the clean-up solvent is released to the atmosphere after a single use. We believe that, in practice, emissions due to clean-up will likely be considerably lower for several reasons. First, clean-up solvent can often be reused. For example, one "how-to" book notes that, as it is illegal to pour thinner down the drain or easily discard the material, it is preferable to save it and use it

multiple times (Sunset Decorating with Paint and Wallcoverings, p. 46, 1991). In several "how to" books it is recommend that when the thinner becomes unacceptably cloudy, one may let the paint settle to the bottom of the can and pour the clarified thinner off into another can for reuse (Sunset Decorating with Paint and Wallcoverings, p. 46, 1991; Black and Decker Home Improvement Library Decorating with Paint and Wallcovering, p. 65, 1988). The U.S. EPA Report to Congress on VOC emissions from aerosol spray paints (United States Environmental Protection Agency, July, 1992) notes that "professionals, serious hobbyists, and do-it-yourselfers have devised various schemes to minimize solvent usage, not for air pollution control reasons, but merely for convenience and to reduce the cost of solvent. Since, in terms of cleaning power, there is no need to discard the solvents following a single brush cleaning, many brushes can be cleaned before the solvency is lost. The volatility of mineral spirits-type thinners (such as would be used with alkyd enamel paint) is relatively low; therefore, little thinner is lost with careful transfer from opened cleaning can to closed container." The consumer may keep a jar with a lid on it, and simply rinse the brush in the solvent at the end of the project. Additionally, solvent that is too dirty for reuse can be taken to a household hazardous waste pick-up event, where the solvent waste will either be recycled or reused for fuel purposes (Integrated Waste Management Board, 8/11/94).

The NPCA estimate for VOC emissions from the use of a spray gun was also unreasonably high, once again mainly due to the assumption that all clean-up solvent used will evaporate. For reasons discussed above, actual emissions due to clean-up will likely be negligible. Giving additional credibility to this assertion is the fact that gravity fed spray guns are essentially wiped clean (Binks Manufacturing Company, 1/11/95), since the canister opens from the top. Very little thinner is needed. The NPCA also assumed that a minimum quantity of 4 oz. enamel (20 gram solids) would be used, where for the aerosol paint and brush-on coating just 5 grams solids were used. This was done because a standard spray gun would not even prime using 1 oz. (5 grams solids) of enamel. However, in a gravity-fed spray gun, 1 oz. of coating and 1/4 oz. of thinner can be used. This lowers the NPCA estimate for emissions from the coating substantially. Additionally, a water-base coating may be used in the spray gun, resulting in even lower VOC emissions.

It is important to note also that the transfer efficiency for aerosol paints is not 100 percent. In fact, it is probably substantially less than 100 percent, as aerosol literature states that a considerable amount of taping-off of surrounding surfaces is advised due to overspray. Therefore, 28.5 grams would be minimum emissions from the aerosol depositing 5 grams of paint solids.

Another consideration is that the emissions due to use of aerosol paints are directly proportional to the amount of solids emitted from the spray nozzle, whereas in the case of solvent-borne brush-on or spray-on coatings the total emissions are much more dependent upon usage of clean-up solvents. Therefore, one could conceivably coat a much greater surface area using a brush-on solvent-borne coating and the increase in emissions would be modest, as the amount of clean-up solvent used would remain constant.

**Table VII-3**

**California Air Resources Board calculations as to theoretical emissions from 5 grams of aerosol and brush-on coatings**

| | Grams VOCs from 5 grams of coating solids | Grams VOCs from Thinning | Grams VOCs from Clean-up | Total grams VOCs |
|---|---|---|---|---|
| Aerosol Coating | >28.5* | 0 | 0 | >28.5* |
| Brush-on Solvent-Borne Coating | 14 | 0 | near 0 (if reused and/or disposed of properly) | 14 |
| Brush-on Water-Borne Coating | 1.3 | 0 | 0 | 1.3 |
| Spray-on Coating | 14 | 7 | near 0 (if reused and/or disposed of properly) | 21 |

* The 28.5 gram value assumes a 100 percent transfer efficiency. Transfer efficiency will probably be considerably less and emissions will be greater than 28.5 grams per 5 grams of solids deposited on the surface.

Finally, there are many brush-on and spray-on high-gloss water-borne coatings available in the marketplace. These coatings have VOC concentrations on the order of 100 g/L, or approximately 10 percent by weight (Battelle Report [Architectural Coatings], 1994), as opposed to a sales-weighted average of 77 percent VOC by weight for aerosol paints (Battelle Report [Aerosol Paints], 1994). Since water-borne coatings have very low-VOC concentrations relative to aerosol coatings, this same five grams of solids deposited from a water-borne coating would result in much lower emissions (see Table VII-3). Additionally, there will be no additional emissions as water is used for any thinning or clean-up. Using the sales-weighted average solids content and the maximum VOC content of water-borne high gloss coatings, as determined from the 1994 Battelle Report on architectural coatings, it can be estimated that 5 grams of solids would result in approximately 1.3 grams of VOCs emitted from a typical high gloss water-based paint (see Table VII-3). Therefore, use of water-borne high-gloss coatings in the place of aerosol paints will result in vastly lower total emissions than those resulting from use of aerosol coatings. As water-borne coatings comprise a significant proportion of the high-gloss brush-on coatings sold in 1990 (about 34%), and

water-borne coatings are generally most convenient in terms of clean-up, a trait that aerosol users would likely find appealing, it is probable that a reasonably large proportion of the aerosol users that do convert to brush/spray-on coatings would switch to water-based high gloss coatings. The probability becomes even higher when discussing medium- and low-gloss non-flat brush/spray-on coatings, as 90% of the medium-gloss and 97% of the low-gloss coatings sold in 1990 were water-based (Battelle Report [Architectural Coatings], 1994).

In conclusion, we do not believe that implementation of the aerosol paint regulation will result in large-scale conversion from aerosol paints to brush-on coatings. However, should this conversion occur, the alternative scenarios and calculations presented above make it clear that the NPCA report represents the "worst-case" possibility and that it is likely that emissions of VOCs to the atmosphere from brush-on paints will be considerably less than aerosol paints.

Will the lack of "traditional," high-VOC aerosol coatings cause consumers to convert to airbrushes, resulting in increased emissions?

Some members of the paint industry have claimed that hobbyists and craftspersons will switch to air brushes if the standard 12 ounce cans of "traditional," high-VOC aerosol coatings consumers have become accustomed to become unavailable. They contend that consumer conversion to air brushes or spray guns will result in greater emissions than from aerosol paints because, as mentioned previously, non-aerosol coatings sold in volumes of one quart (sometimes one liter) or less are exempt from district VOC regulations. Based on the cost analysis and discussion below, we do not believe this will occur.

To resolve this issue, a cost breakdown covering aerosol paints and their alternatives has been prepared. The following list covers each alternative.

Air brushes
A shelf survey and manufacturers product literature indicated that air brushes range in price from $69 to $600 each (Art Ellis Supplies, 7/12/94; Paasche Complete Price List, CPL-994). Additionally, these air brushes require a source of compressed gas.

With Air Compressors
Air compressors are the most common source of compressed gas. The least expensive air compressor we could locate was $150, with more elaborate compressors costing up to $800 (Paasche, CPL-994). Therefore, minimum cost for a bare-bones airbrush system would be $220. A more sophisticated system could easily cost over $1000.

With Aerosol Brush Propellant
A second source of compressed gas available to the hobbyist is aerosol airbrush propellant. These cans contained liquified compressed gas which provides

propellant for a short period of time. They are advertised as "replaceable units of propellant which provide pressure for a short period of time and are recommended when electricity is not available (Paasche, CPL-994)." The cans can be connected to the airbrush to supply the gaseous propellant. This source of gas is also quite expensive, with one arts and crafts store quoting a cost of $12 for a 28 ounce can of airbrush propellant, a second quoting $7.29 for a 9 ounce can, and a third store quoting $7.25 for a 9 ounce can. A 9 ounce can will supply about 35 minutes of continuous spray. One airbrush propellant consisted of dichlorodifluoromethane (CFC-12), an ozone depleter. Because ozone depleting chemicals are being phased out under the Montreal Protocol, at least one manufacturer presently uses HFC-152a, which is not a VOC or an ozone depleting compound (Testors Corporation, 8/9/94).

With Carbon Dioxide

A third source of compressed gas is carbon dioxide gas delivered by way of a pressurized cylinder. The Paasche carbon dioxide tank, size "large," which provides pressure for about 3 hours, costs $162 (Paasche Airbrush Company, Product Literature, not dated). However, a pressure regulator, priced at $71.00, is also required to control the flow of gas from the cylinder. It is also necessary to purchase clamps to secure the tank, as pressurized tanks can be quite dangerous. The tanks are purchased empty and must be filled locally. Again, this is an expensive approach, totalling a minimum of about $300 if the equipment is purchased as a complete system.

An airbrush system is typically used by an individual or company that either prefers this particular style of painting or uses large quantities of paint, with "large" meaning enough paint such that the long term payback in lower cost of paint will offset the high purchase costs. Such an individual or company, if they fall into either of these categories, would probably already be using an airbrush system. Additionally, inconveniences such as storage space, setup and dismantling and cleaning of components after use will deter casual users of paints. Because of the expenses and difficulties, in addition to the fact that complying aerosols will be available in all categories, we do not believe that consumers will switch to airbrushes when the aerosol paint regulation goes into effect.

If a hobbyist does decide to invest in an airbrush system, total emissions from use of an airbrush system would still most likely be less than those from traditional high-VOC aerosol paints. This argument can be supported on the following basis.

a) A comparison of VOCs released per gram of solids shows that even use of high-VOC brush-on paints will result in substantially decreased emissions on a solids basis (see Table VII-3).

b) The hobbyist may be able to use their clean-up solvent again because, even if they are not able to use it for the airbrush, they may use it to clean paint brushes or spray guns for another project.

c) The hobbyist may also take their spent solvent to household hazardous waste collection sites, which, as noted previously, results in recycling or reuse of the solvent.

d) Water-based coatings are frequently used in airbrushes, decreasing emissions considerably.

e) The majority of architectural coatings sold are water-borne, and, as seen in Table VII-3, high-gloss water-borne coatings result in much lower VOC emissions on a solids basis than solvent-based high gloss coatings or aerosol paints. Additionally, clean-up is greatly simplified and the use of organic solvents for clean-up is eliminated.

Final total emissions are dependent upon many factors. For example, the number and frequency of color changes requiring airbrush cleaning and consumer's clean-up solvent reuse and disposal techniques. There may be some "worst-case" scenarios involving a high number of color changes or extravagant use of clean-up solvent with improper disposal that would result in greater emissions. However, we believe that emissions from airbrushes even using high-VOC solvent-borne coatings will generally be lower than those from aerosol paints.

Will lack of "traditional," high-VOC aerosol coatings cause consumers to convert to spray guns, resulting in increased emissions?

Spray guns are used for projects larger than those that would be generally be attempted using aerosol paints. However, as noted previously for airbrushes and brush-on paints, it is possible to use either water-borne or solvent-borne brush-on coatings in spray guns. As described for brush-on coatings, even using solvent-borne brush- or spray-on coatings the emissions will be lower than solvent-borne aerosol coatings on a solids applied basis, and the final emissions are extremely dependent upon size of project and use and management of clean-up solvent. Industry spokespeople, when calculating total emissions, usually assume that the clean-up solvent will be used once and then emitted directly to the atmosphere. However, we have determined that the solvent for spray guns may be reused many times, as noted in "The Painter's Handbook" (McElroy, W., p. 255, 1987). The solids may be allowed to settle and the clarified supernatant decanted off the top for reuse, or the spent solvent may be disposed of through the household hazardous waste program, where it will either be recycled or reused for fuel purposes. In summary, we do not believe that consumers will convert to spray guns if traditional high-VOC products are not available as a consequence of this proposed regulation. However, if such a conversion does occur, it will not result in increased VOC emissions.

Will lower VOC coatings be less efficacious, resulting in more frequent recoating and increased overall emissions?

Some industry spokespeople have suggested that by limiting the VOC content of aerosol coatings the coating quality may be degraded, leading to more frequent recoating and potentially higher emissions. Our analysis, based in part on literature from this same industry, shows otherwise.

Industry spokespeople's concern is based on the assertion that a high-VOC, relatively low solids product is always the highest quality coating. Our investigation has shown that quality is not related solely to the VOC content, rather, quality is dependent upon many different factors. Factoring into the equation are the type and amount of resins and pigments, the solvent properties, the spray technology, and the specific coating applications. Each of the VOC standards in the first tier of this proposed regulation has been specifically determined to reflect the technology available in that specific category, such that manufacturers are not limited to specific resins or carrier technologies that may be inadequate. Manufacturers may use whatever available technology best meets their requirements and the requirements of the market, so long as they meet the VOC standard. Alternative formulations for achieving VOC reductions have been discussed in other chapters of this document, but, in general, manufacturers will probably either develop higher solids, lower VOC coatings, or will use water-based coating technology. These are technologies already used to lower the solvent content of aerosol paints, and there are many high quality products using these technologies.

There are numerous water-borne coatings presently available, many of which are self-described and marketed as "premium" paints. One manufacturer describes two patents for aerosol paints in which the solvent is replaced by water and the resin is water-based, which, it is claimed, result in *"high quality, high gloss acrylic coatings"* (Scotti, F. and Page, E., 1992). These developments make it *"possible to produce high performance aerosol paints with VOC content under 40 percent."* Characteristics of these aerosol paints include *"high color and gloss retention, superior resistance to peeling and blistering, low odor, water clean-up and lower cost formulations."* Plasti-Kote has a low-VOC coating they describe as "premium" (Plasti-Kote). This coating is water-borne, and claims to be fast dry, fights rust, is non-fading, long lasting, and is for interior/exterior application to wood or metal. This *"premium water based enamel"* is described as *"a spray paint that complies with the strictest V.O.C. legislation in the U.S. today, without sacrificing one iota of quality. Easy to use, Plasti-Kote Premium Water Based Enamel dries fast, it can be sprayed indoors or outdoors, cleans up with soap and water, and sprays on a tough, durable finish that can be recoated anytime. Perfect for a wide variety of surfaces including wood, metal, glass, most plastics, styrofoam, masonry, wicker, ceramics and children's toys and furniture."* The Krylon ColorWorks Premium Enamels are described as "low-VOC," are advertised as "premium enamels" and *"aren't just compliant, they are real acrylic enamels - hard, durable, and with a mirror-like finish"* (Krylon ColorWorks Premium Enamel). These products are advertised to be, among other things, *"durable, long-lasting, low odor, water-based, soap and water cleanup, dry to*

*touch in 30 minutes, to handle in two hours, and can be recoated at any time without lifting."* A Krylon product, their "Clean 'n Safe" coating, is described as a *"water-based aerosol that performs like an enamel."* It is also described as *"a proven, hard gloss acrylic enamel that is friendly to the environment, which can be recoated at any time with no lifting, is durable and long lasting, is low odor, amenable to soap-and-water cleanup, and low-VOC."* It also does not contain methylene chloride or toluene. It is advertised as drying to touch in 30 minutes, to handle in two hours, and to perform well in a 100 hour salt spray test (Plasti-Kote, Clean 'n Safe). Plasti-Kote has their *"ultra Decorator water-based acrylic enamel"* which will *"clean up with soap and water, and spray on a tough durable finish that can be recoated anytime"* (Plasti-Kote, ultra Decorator). Another Plasti-Kote product, the "Nature Safe" aerosol coating, is advertised as a *"fast dry premium quality water-based acrylic enamel."* It is described as *"easy to use, it can be sprayed indoors or outdoors, cleans up with soap and water, and sprays on a tough, durable finish that can be recoated anytime"* (Plasti-Kote, Nature Safe).

There are also many high quality, high solids, low-VOC coatings presently available. Another Krylon product (Krylon Interior/Exterior Paint) is advertised as VOC-compliant *"while delivering superior performance."* The coatings in this line are advertised as providing excellent coverage and bonding to wood or metal, whether used indoors our outdoors. They are also advertised as *"drying fast, preventing rust, and providing long-lasting protection on unrusted steel and iron."* These coatings *"dry to handle in 2-3 hours and may be recoated within two hours, or after 48 hours."* The gloss and color retention are declared to be *"exceptional."* Another low-VOC enamel, by Seymour of Sycamore, Inc., is advertised as *"environmentally formulated," "low solvent,"* with *"maximum coverage"* (Seymour of Sycamore, Inc.). This product is a *"premium quality paint that gives you more coverage per square feet with less solvent. Low solvent enamel provides maximum durability, indoors or outdoors on most surfaces."* Seymour of Sycamore also markets their "E Series" environmentally formulated spray paints (Seymour of Sycamore, "Industrial Coatings Maintenance Repair Operations"). These "MRO" (maintenance repair operations) coatings are advertised as for use in industrial settings. The marketing literature reads *"Unique high solids, low solvent formulation to hide, cover and protect better than any other aerosol on the market."* They go on to note that *"this valuable maintenance tool delivers the performance and reliability of industrial grade paint needed for protection against weather, rust, oil, gasoline, corrosive chemicals or rough service. Because of its high solids - approximately 80% more than standard industrial enamels - MRO produces superior single-coat hiding and greater coverage than standard industrial enamels. By utilizing a specially-designed resin, MRO optimizes a high enamel solids content for the best hide, coverage and finish performance."* The product information goes on to state that the MRO coatings are more economical than many coatings because of their high solids content, and they outperform other coatings in terms of corrosion resistance and color retention.

Each formulation type offers advantages and disadvantages. The specific technology used for a specific product will be selected based on the needs of that product. For example, a high-solids solvent-borne product may be most appropriate for rust prevention. In fact, higher solids coatings are generally considered to be higher quality coatings (Johnsen, M. A.,

1982). There are other instances in which a water-based product would be more desirable, for example, for indoor applications requiring low odors, low flammability, and low toxicity (Strobach, D.R., 1990).

Water-based and high solids formulations will have some characteristics that are different from many of the aerosol paints presently available. The dry time may be longer for both the water-borne and high-solids solvent-borne coatings when compared to a low solids solvent-borne enamel or lacquer. The high solids products may cost more per can, although the product will offer a better value to the consumer because there are more solids in each can. One manufacturer reports that although water-based paints do tend to be less resistant to salt spray and corrosion, they offer better film build and gloss. Overall, this manufacturer considers the water-borne product to be as good as a general [solvent-borne] paint (K-G Packaging, 5/27/94). Another manufacturer noted that the presently available water-reducible aerosols are of good quality (Zynolyte Products Company, 6/8/94). Manufacturers continue to modify their formulations to improve the performance of the reformulated products and minimize the performance differences between the different types of coatings.

In reference to the second tier standards, as mentioned previously, there will be a hearing by December of 1998 to determine if these standards are both technically and commercially feasible. If they are not, the effective date for the standards will be postponed for a maximum of five years. Therefore, we expect the second tier standards to also be technologically and commercially feasible at the time they go into effect.

Will the aerosol paint regulation encourage conversion to water-borne products which use ethylene glycol ethers as coalescents?

During development of the aerosol paint regulation a concern was raised that the regulation may encourage the conversion to water-borne aerosols which would be more likely to contain glycol ethers, some of which are considered hazardous. Glycol ethers are commonly used to aid in the coalescence of polymers in water-borne aerosol and brush-on coatings, although they are also used in solvent-borne aerosol coatings. Glycol ethers used in paints and coatings are generally known as "E series" and "P series" glycol ethers. The E series glycol ethers are formed by reacting ethylene oxide with various alcohols while the P series glycol ethers are formed by reacting propylene oxide with various alcohols. Four of the E series glycol ethers have been placed on the proposition 65 list of "chemicals known to the state to cause reproductive [developmental and male reproductive] toxicity" (Safe Drinking Water and Toxic Enforcement Act of 1986). These include ethylene glycol monoethyl ether, ethylene glycol monomethyl ether, ethylene glycol monoethyl ether acetate, and ethylene glycol monomethyl ether acetate. Additionally, E series glycol ethers are considered hazardous air pollutants (HAPs) per Title III, Federal Clean Air Act Amendments of 1990, while the P series glycol ethers are not. Because E series glycol ethers are considered HAPs, they have therefore been listed as toxic air contaminants (TACs) by the ARB under AB 2728 which requires the ARB to identify federal HAPs as TACs. The 189 federal HAPs will be evaluated and prioritized for development of potency numbers by the Office of Environmental

Health Hazard Assessment (OEHHA) and the Scientific Review Panel. After potency numbers are developed, ARB staff will determine the need for control measures.

To determine the prevalence of glycol ethers in aerosol paints, scrutiny of material safety data sheets for aerosol coatings revealed two water-borne aerosol products containing ethylene glycol monobutyl ether (an E series glycol ether and therefore considered a HAP, although not included on the proposition 65 list) and one category of solvent-borne metallic coatings containing propylene glycol monomethyl ether (a P series glycol ether that is not considered a HAP or a TAC, nor is it included on the proposition 65 list).

Because of regulatory pressures on the E series glycol ethers, there has been a push toward the P series glycol ethers in coating formulations (Boyce, et. al., 1993; McReary, B. F. and Junker, L. J., 1994; Doty, P. A., 1993; Dow Chemical Company, 8/26/94), and the use of P-series glycol ethers in brush-on water-borne and water-reducible coatings is well established (Guthrie, D. H., et. al., 1989). We therefore do not believe that the aerosol paint regulation will lead to increased use of hazardous glycol ethers. Glycol ethers are already widely used in both water-borne and solvent-borne aerosol paints, even in the absence of regulations limiting VOC content in aerosols. Acceptable P series alternatives for the E series glycol ethers have been and are being developed (Doty, P. A., 1993). Therefore, if a manufacturer is concerned about her or his use of E series glycol ethers, there are alternatives that may be investigated.

Will the aerosol paint regulation encourage conversion to "stronger" solvents, which may be hazardous air pollutants (HAPs)?

We do not believe that the aerosol paint regulation will cause an increase in the use of hazardous air pollutants. By way of an introduction to this issue, Title III of the Clean Air Act Amendments of 1990 established a list of 189 chemicals and chemical categories that are considered hazardous air pollutants (HAPs). Among these 189 chemicals are solvents that are "widely used in the coatings industry, e.g., methanol, MEK [methyl ethyl ketone], MIBK [methyl isobutyl ketone], many ethylene oxide-based solvents, toluene, and xylene" (Stout, R., 1994). The primary impact on the coatings industry to date has been the establishment of Maximum Achievable Control Technology (MACT) standards to manufacturing sites emitting 10 tons per year of one HAP or 25 tons per year of two or more HAPs. The use of HAPs in aerosol coatings not used during the manufacturing process is not presently restricted. However, research is underway to reformulate coating systems presently using HAP solvents. Research of this type has identified several solvents with desirable characteristics such as "lowering the viscosity of coating resins and ... low density..." (Stout, R., 1994). These include methyl n-propyl ketone and methyl n-amyl ketone, which have these sought-after properties yet are not HAPs (Stout, R., 1994). Another alternative solvent has been identified to replace HAPs is ethyl acetate (Zynolyte Products Company, 9/1/94). Because of the regulatory pressures on HAPs use and the active state of research into non-HAP solvents we do not believe that the aerosol paint regulation will result in increased use of these solvents.

Will use of methylene chloride in aerosol paints increase as a result of the aerosol paint regulation?

Methylene chloride (also known as dichloromethane) is included on the Proposition 65 list as a "Chemical Known to the State to Cause Cancer" (Safe Drinking Water and Toxic Enforcement Act of 1986) and is also specified as a Hazardous Air Pollutant pursuant to Section 112(b) of the Federal Clean Air Act and as a Toxic Air Contaminant (TAC) by the Air Resources Board pursuant to Health and Safety Code Section 39657. Because methylene chloride is not considered a VOC the concern has been raised that this regulation would cause manufacturers to increase their use of this solvent even though it has been determined to have negative health effects. However, we do not believe that the use of methylene chloride will increase as a result of the aerosol paint regulation. We have included a provision in the proposed regulation which will require manufacturers to include methylene chloride in their calculations as a VOC, although it is not considered a VOC under the regulation. As methylene chloride is a very dense solvent, especially when compared to other solvents commonly used in aerosol paints, relatively small amounts will result in a large increase in the calculated VOC concentration, thus discouraging its use in aerosol paints. This topic is discussed in more detail in Chapter IX.

**REFERENCES**

Art Ellis Supply Incorporated, Shelf Survey, Sacramento, California, July 12, 1994.

Battelle Memorial Institute, Survey of Emissions from Solvent Use-Volume I: Aerosol Paints, Prepared for the California Air Resources Board, Contract: A132-085, September 16, 1994.

Battelle Memorial Institute, Survey of Emissions from Solvent Use-Volume II: Architectural Coatings, Prepared for the California Air Resources Board, Contract: A132-086, September 16, 1994.

Binks Manufacturing Company, Telephone conversation with ARB, January 11, 1995.

"Black and Decker Home Improvement Library Decorating with Paint and Wallcovering," Cy DeCosse, Inc., Minnetonka, Minnesota, 1988.

Boyce, T. D., Pollock, D. K., and LaTulip, R., "The Utility of Glycol-Ethers as Co-Solvents in Water-Based Coatings," Twenty-First Biennial Western Coatings Societies' Symposium and Show, Anaheim, California, March, 1993.

Dow Chemical Company, Telephone conversation with ARB staff, August 26, 1994.

Doty, P. A., "Using Solvency Principles in Selecting Cosolvents for Water-Based Coatings," American Paint and Coatings Journal, August 30, 1993, pp. 44-53.

Guthrie, D. H., Olson, C. M., and Vance, R. G., "PnB and DPnB Glycol Ethers - Practical Alternatives to EO-Based Glycol Ethers in Water-Borne and Water-Reducible Coatings," American Paint and Coatings Journal, June 26, 1989, pp. 36-43.

Integrated Waste Management Board, Telephone conversation with ARB staff, August 18, 1994.

Johnson, M. A., "Aerosol Marketing Considerations," The Aerosol Handbook, Wayne Dorland Company, Mendham, New Jersey, 1982, pp. 5-46.

K-G Packaging, Telephone conversation with ARB staff, May 27, 1994.

Krylon ColorWorks Premium Enamel, Product Literature, "Premium Enamels that are VOC-compliant. From Krylon, of course.," no date.

Krylon Interior/Exterior Paint, Product Literature, "Now. America's No. 1 spray paint in a VOC-compliant formula. Krylon, of course.," no date.

McElroy, W., "Painter's Handbook," Craftsman, 1987.

McReary, B. F. and Junker, L. J., "Non-HAP Coalescents for Waterborne Coatings," Paint and Coatings Industry, July, 1994, pp. 70-74.

Paasche Airbrush Company, Product Literature, "Complete Price List Art and Industrial," CPL-994.

Plasti-Kote, Product Literature, "Clean 'n Safe," no date.

Plasti-Kote, Product Literature, "Nature Safe," no date.

Plasti-Kote, Product Literature, "Plasti-Kote premium water based enamel exceeds the toughest air quality standards in the United States," no date.

Plasti-Kote, Product Literature, "ultra Decorator," no date.

"Proposal for the Reduction of VOC Emissions From Aerosol Spray Paint," National Paint and Coatings Association, Spray Paint Manufacturers Committee, Air Quality Task Force, James C. O'Connor, Task Force Chairman, March 22, 1990.

Safe Drinking Water and Toxic Enforcement Act of 1986 (Proposition 65), Health and Safety Code Sections 25249.5-25192, list update of January 1, 1994.

Scotti, F. and Page, E., "Latex Paint Formulations Can Achieve VOC Reductions," Spray Technology and Marketing, September 1994, pp. 38-39.

Seymour of Sycamore, Inc., Product Literature, "Seymour Environmentally Formulated Enamel Spray Paint," no date.

Seymour of Sycamore, Inc., Product Literature, "Industrial Coatings Maintenance Repair Operations," Form #5002-3/93.

Stout, R., "Options for Reducing HAPs Emissions Using MPK and MAK Solvents, " American Paint and Coatings Journal, July 18, 1994, pp. 54-58.

Strobach, D. R., "Water-based Aerosols Formulated with Dimethyl Ether Propellants," American Paint and Coatings Journal, July 9, 1990, pp. 42-45.

"Sunset Decorating with Paint and Wallcoverings," Sunset Publishing Corporation, Menlo Park, California, 1991.

Testors Corporation, Telephone conversation with ARB staff, September 6, 1994.

United States Environmental Protection Agency, Office of Air Quality Planning and Standards, "Volatile Organic Compound Emissions from Consumer and Commercial Products [aerosol spray paints]-Draft," Research Triangle Park, North Carolina, July, 1992.

Zynolyte Products Company, Telephone conversation with ARB staff, September 1, 1994.

# VIII.

# ECONOMIC IMPACTS

## A. INTRODUCTION

In this chapter, we discuss the economic impacts that would be expected from the implementation of the proposed aerosol paint regulation, including the impacts on aerosol paint manufacturers, other industries associated with aerosol paints, and consumers. Our analysis also estimates the cost-effectiveness of the proposed regulation.

The economic impacts discussed in this chapter will be based on the actions necessary to achieve compliance with the initial VOC limits proposed in the regulation. The chapter does not include an economic analysis of the future effective standards proposed for December 31, 1999 because we cannot predict the type of technological developments that will occur prior to the 1999 standards. In addition, several manufacturers have also indicated that it is impossible for them to estimate the cost of the future effective standards at this time. We intend to address the economic impacts of the 1999 standards at the public hearing conducted in 1998 to determine the technological and commercial feasibility of those standards.

## B. COSTS TO MANUFACTURERS AND MARKETERS OF AEROSOL PAINTS

The costs of the proposed regulation are expected to directly impact aerosol paint manufacturers, and be passed on to marketers. For the purposes of this analysis, marketers are business entities which hire manufacturers to produce aerosol paints for them rather than manufacturing the products themselves. In the section, we will discuss the following :

1. "one-time" costs (such as for new equipment);
2. recurring costs (such as for increased materials costs for a new formulation);
3. the total annual cost to individual manufacturers;
4. the cost-effectiveness of the regulation;
5. the total annual cost to the entire aerosol paint industry; and
6. the costs of the proposed ARB regulation compared to the costs of the Bay Area Air Quality Management District's (BAAQMD) aerosol paint regulation.

In all cases, we considered only new or additional costs, not business costs that would have been expected in the normal course of business without the proposed regulation.

## Assumptions

To conduct our analysis, we made the following assumptions in order to estimate the cost for manufacturers to comply with the proposed aerosol paint regulation:

(1) ninety percent of products reformulated for the proposed regulation will be sold in California only, with the other ten percent sold nationally;
(2) product sales will remain constant; and
(3) respondents to the ARB cost survey are representative of the industry.

The first assumption is based on our conservative estimate of the percentage of reformulated products that will be sold nationally. Several aerosol paint manufacturers and marketers indicated to us that in the short term they intend to market their reformulated products only in California. However, some manufacturers may choose other marketing options, such as selling complying aerosol paints nationally. In addition, many aerosol paints that already comply with the proposed standards are sold nationally. Therefore, we believe that at least some of the reformulated aerosol paints will also be sold nationally. Considering all these factors, we opted for the relatively conservative assumption that only 10 percent of the reformulated products would be sold nationally. This assumption will tend to overestimate the cost of implementing the regulation relative to scenarios where a greater percentage of the reformulated aerosol paints would be sold nationally.

The next assumption is that the proposed regulation will not affect the overall sales of aerosol paints. This assumption is necessary because it is difficult to predict the impact, if any, of the proposed regulation on sales. For the purposes of our cost analysis, we assume the sales in 1996 are the same as those reported to us in the 1992 Aerosol Paint Survey.

To obtain specific cost data from manufacturers, we relied heavily on data supplied to us in a cost survey that was conducted in the fall of 1993. While this was not the only information used, it supplied the bulk of the cost numbers in our analysis. The third assumption reflects our understanding of the industry in that the respondents to the survey are representative of the industry as a whole. As discussed later in this chapter, 7 of the estimated 15 to 30 *manufacturers* of aerosol paint in the United States responded to the survey. These respondents included both small and large manufacturers and are responsible for over half of all aerosol paint sales.

### ARB Cost Survey

To collect data for our cost analysis, we requested cost information from the manufacturers of aerosol paint in a letter dated September 17, 1993 (See Appendix G). While the survey was designed to target manufacturers of aerosol paints, the survey was sent to everyone that is included on our aerosol paint mailing list. At the time of the survey there were 140 names on our list, including aerosol paint manufacturers, aerosol paint marketers, consultants to the industry, and numerous other interested parties.

We received responses from 7 aerosol paint manufacturers. There are estimated to be between 15 and 30 aerosol paint manufacturers (Seymour of Sycamore, 8/12/94; Sherwin-Williams). These aerosol paint manufacturers develop aerosol paint formulas that they sell under their own brand name or to marketers of aerosol paints that then sell the formula under their own label. Manufacturers were targeted because we expected that they would be best able to predict the cost of complying with the proposed regulation since they are the source of the aerosol paint formulas. As mentioned previously, the seven survey respondents included both small and large manufacturers which collectively represent well over 50 percent of the aerosol paint market.

The survey requested a breakdown of the costs to comply with 3 regulatory scenarios. However, since one of these scenarios represented a regulatory approach that has since been dropped from the proposed regulation, only the following two are now considered in this cost analysis:

(1) cost incurred to come into compliance with the BAAQMD's aerosol paint rule, and

(2) the additional costs expected to comply with the initial VOC limits then proposed in the statewide ARB rule for 1995 (now proposed for 1996).

The data provided to us regarding the additional costs expected from complying with the proposed ARB aerosol paint regulation were used as the basis for the cost analysis in this report. The costs of complying with the BAAQMD's aerosol paint regulation (the first scenario) were requested in the survey to help us distinguish between the costs of the BAAQMD regulation and the additional costs of complying with the proposed ARB regulation, and to provide a comparison between the costs of the two regulations.

The cost breakdown requested in the survey segregated various one-time and recurring costs as described below.

**One-Time Costs**

According to the information supplied to us in the ARB Cost Survey and additional data supplied during telephone conversations with industry contacts, we expect that the one-time (capital) costs due to the proposed regulation will be the following:

(1) costs associated with the construction of new storage space for increased inventory of "California-only" products;

(2) the purchase and installation of new propellant tanks and associated equipment; and

(3) expenses related to research and development, product testing, and labeling and packaging changes.

As shown in Appendix G, these one-time costs, as reported, ranged from zero to 3.6 million dollars annually (ARB Cost Survey). The wide range in one-time costs is due to the variation in the size of the manufacturers affected by the regulation, the type of products currently sold by the manufacturer, and the marketing arrangement used. The manufacturers who reported no one-time costs indicated that they have already developed satisfactory paint formulations for the Bay Area Air Quality Management District's (BAAQMD's) aerosol paint regulation, which specifies VOC limits that are very similar to the initial VOC limits in the proposed ARB regulation, and do not expect any additional costs to comply with the ARB's regulation. The manufacturers with higher costs were larger companies with more products in their product line. Much of the costs for these manufacturers was due to inventory space and marketing rather than product formulation. As such, these companies have the option of reducing the cost of the regulation by marketing complying products nationally, rather than only in California.

Industry Storage/Distribution Costs: Even though most manufacturers already hold a dual inventory because of the BAAQMD regulation, some aerosol paint manufacturers indicated that increased storage space would be a major cost. According to some manufacturers, the proposed California regulation would substantially increase the floor space necessary to store adequate supplies of aerosol paints for California and the rest of the nation. The amount and cost of storage to accommodate California-only products would vary, depending on the type of inventory control used (Rust-oleum). Some manufacturers may opt to sell complying formulations nationally, eliminating this cost.

New Equipment Costs: Another one-time cost mentioned was the purchase of new propellant tanks. New propellant tanks would be necessary to use the propellant dimethyl ether (DME), which is often used in water-borne aerosol paint formulations. According to one manufacturer, the cost of a typical twenty thousand gallon tank and peripheral plumbing would be approximately thirty-five thousand dollars (Seymour of Sycamore, 2/8/94).

Research and Development Costs: Research and development costs include the costs of developing new complying formulas and conducting product performance and stability testing. Manufacturers reported that a series of performance tests are generally conducted on new formulations, including testing of dry time, spray pattern, coverage, gloss, hardness, adhesion, impact, flexibility, hiding, resistance to ultraviolet exposure, and other properties (Plasti-kote, Zynolyte, Flecto). Products with specialized functions, such as heat resistance or rust prevention, are generally also tested to measure their special properties.

Stability testing is generally also performed to ensure that the product, as packaged in an aerosol container, continues to perform as designed after a certain "shelf life." Stability testing is performed by checking the product characteristics and container after storing the

product for a specified period of time at a specified temperature. The specific time and temperature used in the test vary with the company. However, many companies run "accelerated" tests at elevated temperatures, such as 120 degrees Fahrenheit, for a period of weeks (Plasti-kote). After storage, the product is checked for spray characteristics, precipitation of product ingredients ("kickout"), loss of propellant, can corrosion, and other properties (Zynolyte).

The cost estimates for product testing vary widely from company to company. These differences result from the wide variation in the number of noncomplying products owned by different manufacturers, the success of past reformulations to meet the BAAQMD aerosol paint regulation, and the nature of the individual product formulations. For example, some companies already sell many aerosol paints in California that comply with the proposed VOC standards while other companies, who have chosen to withdraw their products from the Bay Area, will be required to start new product development efforts from "scratch." In addition, at least one company considers research and development costs as ongoing business costs that are not necessarily an added cost of regulation (Flecto).

**Recurring Costs**

According to the ARB Cost Survey, typical recurring costs expected due to the proposed regulation include the costs of maintaining two lines of products, California and non-California, and the cost of more expensive raw materials. Recurring costs reportedly ranged from zero to 2.9 million dollars (ARB Cost Survey). As with the one-time costs, the variation in recurring costs is due to the variation in the size of manufacturers, the types of products them produce, and marketing arrangement used. The manufacturers who reported no recurring costs may already have complying products which are sold nationally, or they may not expect additional costs associated with maintaining an inventory of California-only products beyond the existing costs of maintaining a separate inventory of BAAQMD-only products. It is also expected that additional manufacturers would sell California-complying products nationwide as their formulations are improved in the future.

Dual Distribution Costs: Recurring costs reportedly associated with the maintenance of two product lines include the maintenance of additional inventory for California-only products, the maintenance of additional product labels for California-only products, and added distribution costs for each product line. Product advertising would also need to be different in some cases for California because the California products may be different. Additional paperwork associated with maintaining two product lines was also listed as an additional recurring cost in the ARB cost survey and during the November 12, 1993 workshop. The increased paperwork is associated with the cataloging, purchasing, storing, and tracking of the new products.

Raw Materials Costs: Recurring costs associated with more expensive materials are expected because reformulation may necessitate higher solids formulations with more pigments and resins. These formulations are generally more expensive to manufacture

because paint solids are the most expensive ingredients in an aerosol paint formulation at this time. However, some manufacturers have already marketed more expensive complying high-solids products successfully as "premium" products with greater coverage (Seymour of Sycamore, "E-series" product literature). Manufacturers reported that their products formulated to meet the BAAQMD regulation, which is similar to the proposed ARB aerosol paint regulation, cost from 5 to 30 percent more to manufacture than their products sold nationally.

**Total Annual Cost**

The total annual cost was calculated for each company that participated in the cost survey. We defined the total annual cost for each company as the sum of the annualized one-time cost and the annual recurring cost. The annualized one-time cost was determined by amortizing the one-time (capital) costs over either 5 or 10 years at an interest rate of 10 percent. The resulting annualized one-time costs ranged from $0.0 to $672,000 using a 10 year amortization period, and from $0.0 to $1.1 million dollars for a 5 year amortization period. As shown in Table X of Appendix G, the *total annual cost* of the regulation ranged from $0.0 to $3.6 million dollars using the 10 year amortization period for the one-time costs, and from $0.0 to $4 million dollars using the 5 year amortization period for the one-time costs. After the 5 or 10 year amortization period, the one-time costs would terminate, leaving only the annual recurring costs.

**Cost Effectiveness**

Cost-effectiveness ratios are used to compare the cost of a regulation to the benefits in terms of reduced emissions and are expressed in dollars required per pound (or ton) of pollutants reduced. We calculated the cost-effectiveness ratio of the proposed aerosol paint regulation by dividing the total annual cost of the regulation for all the companies that responded to the cost survey by the total VOC emission reductions expected from these companies (see Appendix G). Based on the assumptions in the analysis, the cost effectiveness of the proposed 1996 standards was estimated to be $3.21 per pound ($6,400 per ton) for a 5 year amortization of one-time costs or $2.86 per pound ($5,700 per ton) for a 10 year amortization of one-time costs.

Table VIII-1 compares the cost-effectiveness ratio of the proposed regulation to other measures the Board has recently adopted. While the cost-effectiveness ratio is similar to the other control measures, the cost effectiveness ratio for the aerosol paint regulation is higher than the ratios for the Phase I and Phase II consumer products regulations. This is primarily because of the conservative assumption that only 10 percent of the aerosol paints reformulated for the proposed regulation will be sold nationally, and not because the regulatory costs are higher than the costs of the consumer products regulations. As noted before, we made this assumption because many manufacturers have indicated they intend to market California-only products.

The assumption that only 10 percent of reformulated products will be sold nationally increases the cost-effectiveness ratio of the regulation because the emission reductions are much lower than if all the reformulated products are assumed to be sold nationally (as in the consumer products regulations). For comparison, if we assumed that all the complying aerosol paints were to be sold nationally, the cost-effectiveness ratio for the aerosol paint regulation would range from $ 1,200 - $ 1,300 per ton, about half the value of the upper end cost-effectiveness estimate for the consumer products regulations.

**TABLE VIII-1**

**Comparison of the Cost-Effectiveness of the Proposed Aerosol Products Regulation with the Cost-Effectiveness of Other Control Measures for Criteria Pollutants**

| Source | Pollutant(s) | $/Ton Emission Reduction |
|---|---|---|
| Architectural Coatings (1989) | VOC | Net savings - $12,800 |
| Low Emission Vehicles / Clean Fuels (1990) | NOx, VOC, CO | $ 10,000 - $ 32,000 |
| Deodorants & Anti-perspirants (1989) | VOC | $ 1,000 - $ 2,400 |
| Phase I & II Consumer Products (1990-1) | VOC | Net Savings - $ 3,400 |
| Aerosol Paint Regulation (1996 VOC Standards) | VOC | $ 5,700 - $ 6,400 |

**Total Annual Cost to the Aerosol Paint Industry**

The total annual cost to industry is an estimate of the combined costs affecting all of the companies affected by the regulation. In this analysis, the total annual cost to industry is estimated by multiplying the emission reductions to be achieved by the regulation by the cost-effectiveness of the proposed regulation. As shown in Appendix G, the total cost to industry is estimated to be between $12 and $13 million dollars.

**Comparison of Costs of Proposed ARB Regulation to BAAQMD Regulation**

In the ARB Cost Survey, we requested information on the cost of complying with the BAAQMD aerosol paint regulation. As stated earlier, one of the reasons we requested this information was to provide a comparison between the costs to manufacturers of complying with the BAAQMD Rule 8-49 and the proposed ARB regulations. In the Cost Survey, we

requested that the cost estimates for the BAAQMD regulation exclude costs due to the loss of sales and other costs related to the short lead time to meet the BAAQMD regulation. These costs were eliminated from the Cost Survey because they were unique to the BAAQMD regulation and would not result from the proposed ARB regulation.

As shown in Table VIII-2, the cost of the proposed ARB regulation compared to the BAAQMD regulation depends on the individual manufacturer. However, as shown in Appendix G.6, the overall cost-effectiveness of the proposed ARB regulation ($2.86 - $3.21) is about half the cost-effectiveness of the BAAQMD regulation ($5.60 - $6.37). This is primarily because the emissions reductions achieved by the BAAQMD regulation are much lower since they apply only to the Bay Area region.

**TABLE VIII-2**

**Comparison of the Costs of the BAAQMD and Proposed ARB Aerosol Paint Regulations**

| | One-Time Capital Cost | | Recurring Cost | | Total Annual Cost * | |
|---|---|---|---|---|---|---|
| Company | BAAQMD | ARB | BAAQMD | ARB | BAAQMD | ARB |
| A | not avail. | $ 17,700 | not avail. | $ 25,000 | not avail. | $ 29,700 |
| B | $ 68,100 | $ 139,800 | $ 0.0 | $ 0.0 | $ 18,000 | $ 36,900 |
| C | $ 22,600 | $ 0.0 | $ 20,200 | $ 2,800 | $ 26,200 | $ 2,800 |
| D | $ 180,000 | $ 72,500 | $ 10,000 | $ 0.0 | $ 57,500 | $ 19,100 |
| E | $ 7,000 | $ 29,500 | $ 0.0 | $ 0.0 | $ 1,800 | $ 7,800 |
| F | $ 1.5 mill | $ 4.1 mill | $ 885,000 | $ 2.9 mill | $ 1.3 mill | $ 4.0 mil |
| G | $ 251,000 | $ 0.0 | $ 250,000 | $ 0.0 | $ 316,200 | $ 0.0 |

* 5 year amortization of one-time costs

## C. COSTS TO OTHER INDUSTRIES

Although the standards in the proposed aerosol paint regulation are expected to primarily impact manufacturers and marketers of aerosol paint, we recognize that other industries could also be impacted. These industries include distributors, retailers, and "upstream" suppliers who supply aerosol cans, valves, solvents, propellants and other chemicals used in aerosol paints.

An overall decrease in the sales of aerosol paint would affect almost all industries associated with aerosol paint, including distributors, retailers, and suppliers. As described

earlier in this cost analysis under "Assumptions," we are unable to predict the extent to which this would occur. Based on the current availability of complying formulas, we do not expect this to occur to a great extent. However, even if there were a drop in aerosol paint sales, we do not believe that this would have a major impact on distributors, retailers, or suppliers. Distributors and retailers generally carry a wide variety of merchandise and would most likely increase their inventory of other products if fewer aerosol paints were sold.

In addition, suppliers to the aerosol paint industry generally also supply other industries. For instance, chemical companies supply a wide variety of industries, and suppliers of aerosol cans and other components also supply other aerosol product areas such as personal care products, automotive products, household products, and insecticides. According to the Chemical Specialties Manufacturers Association, aerosol paints and finishes represent approximately 13 percent of the aerosol cans filled in the United States (CSMA, 1992 Pressurized Products Survey).

**Distributors**

Distributors which sell aerosol paints both in California and in other states may have higher costs due to the tracking and storage of separate inventories for California and non-California products. However, because of the BAAQMD regulation, distributors already handle a dual inventory of aerosol paints. Distributors contacted to determine the additional costs, if any, of handling products for California-only sale commented that it would be difficult to estimate these costs (Ace Hardware, Garaheime, Ideal Paint).

Another potential added cost would be procedures implemented to ensure that noncomplying products are not sold past the proposed 18 month sell-through period. If products are not sold within the sell-through period, they would have to be sold back to the manufacturer or sold outside of California. However, we believe that the 18 month sell-through period should be adequate. Complying products have already been developed and sold in the Bay Area to meet the BAAQMD's aerosol paint regulation. In addition, the ARB conducted a survey of the sell-through period for consumer products sold by retail small businesses during the development of the "Phase II" consumer products regulation. The survey showed that 89 percent of the consumer products covered in the survey were sold within one year, and 97 percent were sold within 2 years (ARB, 10/91). Based on this information, a sell-through period of 18 months was provided in the ARB consumer products regulations and did not cause significant disruption of the marketplace. In addition, because aerosol paint manufacturers are aware of the proposed regulation, we expect that they can work with distributors to ensure that noncomplying products are not sold beyond the 18 month sell through period.

**Retailers**

Similar to the discussion for distributors, retailers could be impacted if noncomplying products were not sold within the 18 month sell-through period provided in the proposed

regulation. However, as stated before, ARB staff believe that the 18 month sell-through is adequate, and that manufacturers will work with distributors and retailers to prevent the sale of noncomplying products. Additionally, products not sold within this time could be sold by the retailer back to the manufacturer in some cases (Seymour of Sycamore, 2/8/94).

**Upstream Suppliers**

Upstream suppliers could also be affected by the proposed regulation. As manufacturers modify their formulations to higher solids or water-borne formulations to comply with the proposed ARB regulation, there will be different raw materials purchased. Specifically, there may be a decrease in the sales of hydrocarbon propellants and solvents used in solvent-borne formulations and an increase in the sales of DME propellant (used in water-borne products), water-soluble solvents such as alcohols, and paint solids. However, ARB staff do not expect these changes to result in a major impact to these suppliers in 1996 because solvent-borne products will still be manufactured (although with less VOC solvents), and because suppliers such as chemical companies generally sell their products to many different industries, of which aerosol paints is usually a small fraction (Exxon, 2/22/94). One exception to this may be propellant suppliers, which reported selling a significant percentage of their hydrocarbon propellants to aerosol paint manufacturers. However, they also reported selling DME (the replacement for hydrocarbon propellants which is used in water-based products), although at a lower profit margin (Technical Propellants, 2/24/94; Aeropres 2/22/94).

## D. IMPACTS OF INCREASED COSTS ON CONSUMERS

In this section, we estimate the effect of the proposed regulation on the retail price of aerosol paints. We believe that the majority of manufacturers will recover the costs of the proposed regulation by passing them on to consumers. However, the extent to which this occurs will depend on consumer responsiveness to price changes.

Manufacturers or marketers may follow different strategies to recover their costs. They could pass on the costs by raising the price of reformulated aerosol paints only or raise the price of all their aerosol paints (either in California only or nationally). If the manufacturer sells products other than aerosol paints, they could also raise the price of products not covered by the regulation.

We estimated the effect of the proposed regulation on the retail price of aerosol paints in two ways. First, the added cost per unit (can) will be estimated based on data from the ARB Cost Survey. Second, a shelf survey comparing the price of Bay Area aerosol paints (which are subject to the BAAQMD's aerosol paint rule) and aerosol paints sold outside the Bay Area will be used to estimate the impact of the proposed regulation.

**Cost Per Unit Based on the Total Annual Cost**

We estimated the impact of the proposed regulation on the price of aerosol paints by estimating the cost increase per unit (can). The cost increase per unit is based on the sum of the total annual costs reported by all the respondents to the ARB Cost survey, and the total number of cans sold by these companies. This was done in two ways. First, we assumed that all of the costs of the proposed regulation are passed on to products sold in California only. Second, we assumed that the costs of the proposed regulation are spread equally over all the products sold on a national basis. Based on these assumptions, the overall cost increase per unit is estimated to be from $0.04 per can, assuming costs are spread over products on a national basis, to a maximum of $0.34 per can, assuming costs are spread only over California products (see Appendix G). However, markups added by distributors and retailers would be expected to further increase these estimates.

**Aerosol Paint Price Survey**

We also conducted a survey comparing the prices of aerosol paints sold inside the Bay Area Air Quality Management District (BAAQMD) to those sold outside the District in order to estimated the impact of the proposed regulation on retail prices. This comparison was based on the fact that the BAAQMD has an aerosol paint regulation, Rule 8-49, with similar VOC limits to the proposed initial VOC limits in the ARB regulation.

We used the following approach to assess the potential impact of the proposed regulation on consumers:

(1) From November, 1993 to February, 1994, we conducted shelf surveys at stores in Sacramento, a city outside of the BAAQMD jurisdiction, and Fairfield, a city within its jurisdiction. The stores surveyed were Ace Hardware, Home Depot, Fuller O' Brien Paints, and Target.

(2) At each store, we recorded the type, price, manufacturer, and size of each aerosol paint. Only regularly priced items were included in the surveys (not sale priced products).

(3) In order to do the comparison, we surveyed 28 products with the same product label in both Sacramento and Fairfield, and the costs were broken down to price per ounce.

(4) Based on the information collected, we analyzed the costs to determine if there were any effects on shelf prices in the Bay Area due to the BAAQMD aerosol paint regulation.

Table VIII-3 summarizes the survey data, including the products that were included in the survey, their price in Sacramento and Fairfield, and the percent price difference. The products in Table VIII-3 are ordered based on the price in Sacramento, starting with the lowest priced products. Overall, the prices in Fairfield were comparable to the prices in

Sacramento, with the average price per ounce in Fairfield only 6 percent higher than the average price per ounce in Sacramento. However, the survey data also indicated that lower priced products are more expensive in the Bay Area.

**Table VIII-3**

**AEROSOL PAINT PRICE COMPARISON**
**BETWEEN FAIRFIELD AND SACRAMENTO**

| | | | Sacramento | | | Fairfield | | | percent |
|---|---|---|---|---|---|---|---|---|---|
| Product * | id. # | Manufacturer | price** | oz. | price per oz. | price** | oz. | price per oz. | price difference |
| Polyurethane Clear Finish | 1 | Krylon | 1.94 | 11 | 0.18 | 1.99 | 11 | 0.18 | 2.51 |
| Crystal Clear Acrylic Coating | 2 | Krylon | 1.94 | 11 | 0.18 | 3.29 | 11 | 0.30 | 41.03 |
| Sandable primer | 3 | Krylon | 2.36 | 12 | 0.20 | 3.8 | 12 | 0.32 | 37.89 |
| Int/Ext. Premium Enamel | 4 | Ace | 2.45 | 11.5 | 0.21 | 2.99 | 10 | 0.30 | 28.75 |
| Int/Ext Paint - gold | 5 | Krylon | 2.77 | 12 | 0.23 | 3.72 | 12 | 0.31 | 25.54 |
| Int/Ext Paint - most colors | 6 | Krylon | 2.77 | 12 | 0.23 | 4.06 | 12 | 0.34 | 31.77 |
| Int/Ext Paint - silver | 7 | Krylon | 2.77 | 12 | 0.23 | 4.37 | 12 | 0.36 | 36.61 |
| All Weather Rust Stop Enamel | 8 | Ace | 2.89 | 12 | 0.24 | 3.59 | 12 | 0.30 | 19.50 |
| Waterbased spray enamel | 9 | Krylon | 2.99 | 12 | 0.25 | 2.89 | 10 | 0.29 | 13.78 |
| Engine Enamel | 10 | Zynolyte | 3.19 | 12 | 0.27 | 3.99 | 11 | 0.36 | 26.71 |
| Appliance epoxy | 11 | Krylon | 3.22 | 11 | 0.29 | 3.22 | 11 | 0.29 | 0.00 |
| Acrylic Gloss Enamel spray coating | 12 | Krylon | 3.29 | 11 | 0.30 | 3.29 | 11 | 0.30 | 0.00 |
| Country Loft Acrylic | 13 | Krylon | 3.6 | 12 | 0.30 | 3.23 | 12 | 0.27 | -11.46 |
| Int/Ext Paint | 14 | Krylon | 3.64 | 12 | 0.30 | 3.64 | 12 | 0.30 | 0.00 |
| Rust Tough | 15 | Krylon | 3.73 | 12 | 0.31 | 3.99 | 12 | 0.33 | 6.52 |
| Auto Primer | 16 | Rust-Oleum | 3.76 | 12 | 0.31 | 3.94 | 12 | 0.33 | 4.57 |
| Rustfighter Enamel | 17 | Krylon | 3.79 | 12 | 0.32 | 3.73 | 12 | 0.31 | -1.61 |
| Heat Resistant | 18 | Ace | 3.99 | 12 | 0.33 | 4.29 | 12 | 0.36 | 6.99 |
| Hi Heat Spray Paint | 19 | Krylon | 3.96 | 11 | 0.36 | 4.72 | 12 | 0.39 | 8.47 |
| Epoxy Rust - Mate | 20 | Zynolyte | 4.04 | 11 | 0.37 | 4.38 | 12 | 0.37 | -0.62 |
| Spray Enamel | 21 | Rust-Oleum | 4.48 | 12 | 0.37 | 3.97 | 12 | 0.33 | -12.85 |
| Super Gold | 22 | Zynolyte | 4.4 | 11 | 0.40 | 4.6 | 13 | 0.35 | -13.04 |
| Super Copper | 23 | Zynolyte | 4.6 | 11 | 0.42 | 4.8 | 12 | 0.40 | -4.55 |
| Hi Temp 1000F | 24 | Zynolyte | 4.7 | 11 | 0.43 | 4.61 | 13 | 0.35 | -20.49 |
| Rust Metal Primer | 25 | Rust-Oleum | 5.19 | 12 | 0.43 | 3.99 | 12 | 0.33 | -30.08 |
| Bulls Eye Shellac | 26 | Zinsser | 5.29 | 12 | 0.44 | 4.74 | 12 | 0.40 | -11.60 |
| Stone Craft Stone Texture Kit | 27 | Krylon | 9.91 | 18 | 0.55 | 9.99 | 18 | 0.56 | 0.80 |
| Fleck Stone Kit | 28 | Plasti - Kote | 9.94 | 18 | 0.55 | 9.99 | 18 | 0.56 | 0.50 |
| AVERAGE PRICE PER OZ. | | | | | 0.32 | | | 0.34 | 6.12 |

**** Products are sorted and graphed by increasing dollars per oz. for aerosol paints in Sacramento***

***** This is the average price for each product from all the stores for which the product was present***

Figures VIII-1 and VIII-2 graphically represent the difference in price between Fairfield and Sacramento products. As with Table VIII-1, the products are ordered from lowest priced to highest, based on the price in Sacramento. Figure VIII-1 shows the *percent* difference in dollars per ounce, while Figure VIII-2 shows the difference in dollars per ounce. These figures demonstrate that the largest difference in price per ounce between Sacramento and Fairfield occurs for the lower priced items. We believe that this may occur because the more expensive higher solids or water-borne products sold in the Bay Area Air Quality Management District (BAAQMD) are not profitable at low price levels.

**Figure VIII-1**

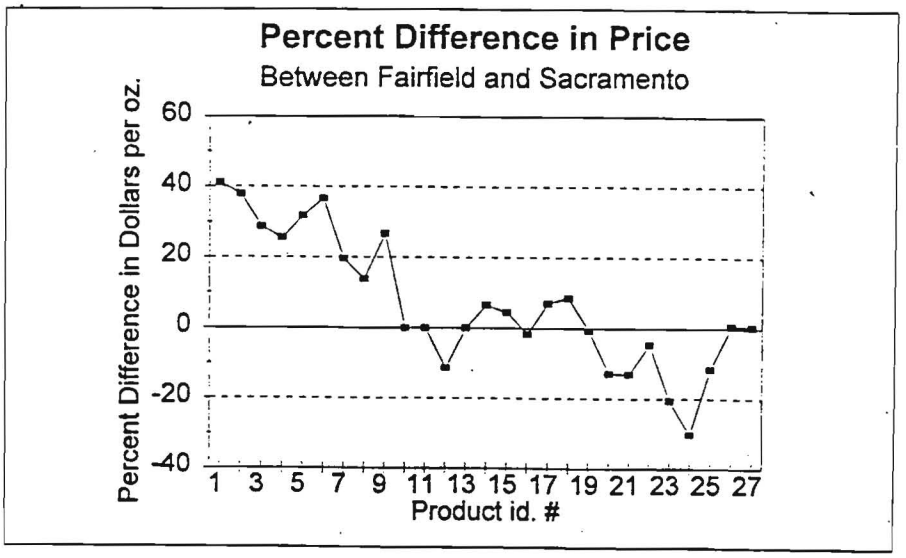


**Figure VIII-2**

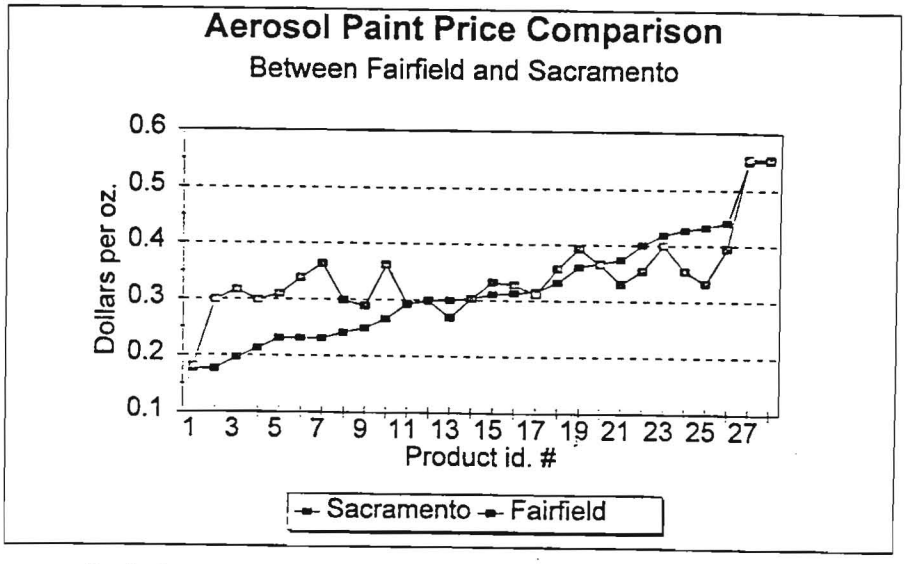


***Products are sorted and graphed by increasing dollars per oz. for aerosol paints in Sacramento***

## Legal Requirements

Two recent bills passed by the California State Legislature require regulators to evaluate the effect of regulations on jobs, business, and the ability to compete in the national marketplace. These bills are as follows:

Senate Bill 513 - Job losses and gains; Business creation and elimination
Assembly Bill 969 - Business competitiveness

Senate Bill 513 added a new section to the Government Code (Section 11346.54) that requires state agencies to assess the potential impact of their regulations on California jobs and on business expansion, elimination, or creation.

Assembly Bill 969 enlarged Government Code section 11346.53 to require a state agency to include the ability of California businesses to compete with businesses in other states in its adverse economic impact assessment. Prior to this bill, Government Code section 11346.53 only required state agencies to assess the potential for adverse economic impacts on California business enterprises and individuals when proposing to adopt or amend any administrative regulation.

### Study Approach

This study covers 7 of the estimated 15 to 30 manufacturers of aerosol paint in the United States. These manufacturers responded to the ARB Cost Survey described earlier in this chapter. These survey respondents represent both large and small companies, and collectively represent well over 50 percent of the aerosol paint market. The approach used in evaluating the potential economic impact of the proposed regulation on these manufacturers is as follows:

(1) Annual costs of compliance were estimated for each of these manufacturers.

(2) The estimated annual costs were adjusted for taxes.

(3) These adjusted costs were then subtracted from net profit data.

The results were used to calculate the Return on Owners' Equity (ROE). The resulting ROE was then compared with the ROE before the subtraction of the adjusted fees to determine the impact on the profitability of the manufacturers. A reduction of more than 10 percent in profitability is considered to indicate a potential for significant adverse economic impacts. The threshold value of 10 percent has been used consistently by the ARB staff to determine impact severity. This threshold is consistent with the thresholds used by the U.S. EPA and others.

**Assumptions**

This study uses publicly available financial data to calculate the ROEs for the 7 manufacturers which responded to the survey (Dun and Bradstreet). The calculations were based on the following assumptions:

(1) The manufacturers who responded to the survey are representative of typical manufacturers in the aerosol paint industry.

(2) All affected manufacturers/marketers are subject to federal and state tax rates of 35 percent and 9.3 percent respectively.

(3) Affected manufacturers/marketers do not increase the prices of their products or lower their costs of doing business through short run cost-cutting measures.

**Potential Impact On Manufacturers**

Typical aerosol paint manufacturers are affected by the proposed regulation to the extent that its implementation would alter their profitability. Using ROE to measure profitability, we found that the average ROE of the seven manufacturers changed by less than 3 percent from an average of 21.3 percent to 20.7 percent. This does not represent a significant change in the average profitability of typical manufacturers.

The change in profitability of individual manufacturers, however, varied from the industry average. For the 7 aerosol paint manufacturers, for example, the change in profitability ranged from a high of 8.5 percent to a low of zero percent. This variation in the impact of the proposed regulation can be attributed mainly to two factors. First, it is more costly for some manufacturers to comply than others due to the formulations of their products, their share of the California market, and their distribution arrangement. For instance, the estimated costs for survey respondents ranged from a high of $3.6 million to a low of $0.0. Second, the performance of businesses may differ from year to year. Hence, the 1993 financial data used in this analysis may not be representative of a typical-year performance for some manufacturers.

The potential impacts estimated here may be high for the following reasons. First, affected businesses probably would not absorb all of the increase in their costs of doing business. They might be able to either pass some of the cost on to consumers in the form of higher prices, reduce their costs, or both. Second, the calculation of costs for the products reformulated for the proposed regulation was based on the assumption that the products will be sold only in California. This assumption tends to overestimate the compliance costs because reformulated products are eventually likely to be marketed nationally.

## Potential Impact on Employment

We do not expect the proposed regulation to result in a significant impact on employment in California because, as explained above, the regulation is not expected to result in a significant economic impact.

In addition, the number of people employed by the aerosol paint manufacturing industry in California is estimated to be very small. Specific data on the number of people employed in the manufacturing and marketing of aerosol paints in California are not available. However, according to the U.S. Department of Commerce, California employment in establishments primarily engaged in manufacturing paints, varnishes, lacquers, enamels, and allied products totaled less than 6,200 in 1992 (U.S. Department of Commerce). This accounts for a small fraction of one percent of total manufacturing jobs in California. In addition, *aerosol* paints are a small fraction of the total volume of paint manufactured. Nationally, only about 1.4 percent of the total volume of paint produced is sold in the aerosol form (U.S. EPA). Since the contribution of the aerosol paint industry to the California economy is marginal, we do not expect that the impact of the proposed regulation on California would be significant..

### Impact on Business Creation, Elimination, or Expansion

Since the proposed regulation is not expected to have a significant impact on the profitability of aerosol paint manufacturers, we do not expect to see a noticeable change in the status of aerosol paint businesses in California. In addition, much of the increased cost is expected to be passed on to consumers; thus, affecting manufacturers' profit margin even less than estimated in this analysis.

### Impact on Business Competitiveness

The proposed regulation would have little or no impact on the ability of California businesses to compete with businesses in other states. Because the proposed regulation affects all businesses that manufacture aerosol paints for sale in California, its impact would be the same for all businesses, regardless of their location. In addition, according to the ARB 1992 aerosol paint survey only 13 of the 62 businesses reporting California sales are located in California. These businesses accounted for about 11 percent of total aerosol paint sales in California (Battelle). Because most potentially affected businesses are located outside California, the impact of the proposed regulation on California business competitiveness would be minimal.

### Conclusion

Overall, based on our analysis of the data available, California businesses are expected to be able to absorb the costs of the proposed regulation without significant adverse impacts on their profitability. However, some businesses may potentially experience a greater reduction in their profitability than others or may not be able to expend monies to develop low VOC complying formulas. Therefore, it is possible that some individual businesses may experience a significant adverse economic impact from this regulatory action, even though

overall there should be no significant adverse economic impact on businesses as a whole.

Since the proposed regulation imposes no noticeable impact on the profitability of California businesses as a whole, we expect no significant change in employment; business creation, elimination, or expansion; and business competitiveness.

**REFERENCES**


Ace Hardware, Telephone conversation with ARB staff, February 22, 1994.

Aeropres Corporation, Telephone conversation with ARB staff, March 4, 1994.

Air Resources Board, "Proposed Amendments to the Statewide Regulation to Reduce Volatile Organic Compound Emissions from Consumer Products: Phase II Technical Support Document," October, 1991.

Air Resources Board Cost Survey, February 25, 1993.

Battelle Memorial Institute, "Survey of Emissions from Solvent Use - Volume I: Aerosol Paints," September 13, 1994.

Bay Area Air Quality Management District, "Rule Development Staff Report: Regulation 8, Rule 49, Aerosol Paint Products."

Chemical Specialties Manufacturers Association, "Aerosol Pressurized Products Survey, United States 1992."

Dun and Bradstreet, "Business Information Report," 1993-1994.

Exxon, Telephone conversation with ARB staff, February 22, 1994.

Flecto, Telephone conversation with ARB staff, July 26, 1994.

Garaheime, Telephone conversation with ARB staff, March 4, 1994.

Ideal Paint, Telephone conversation with ARB staff, March 3, 1994.

Plasti-kote, Telephone conversation with ARB staff, July 26, 1994.

Rust-oleum, Telephone conversation with ARB staff, February 18, 1994.

Seymour of Sycamore, "Seymour E Series Environmentally Formulated Spray Paints," April, 1992.

Seymour of Sycamore, Telephone conversation with ARB staff, February 8, 1994.

Seymour of Sycamore, Telephone conversation with ARB staff, August 12, 1994.

Sherwin-Williams, Telephone conversation with ARB staff, August 12, 1994.

Technical Propellants, Incorporated, Telephone conversation with ARB staff, February 24, 1994.

United States Environmental Protection Agency, Draft Report to Congress, "Volatile Organic Compound Emissions from Consumer and Commercial Products: Aerosol Paints," July, 1992.

United States Department of Commerce, Bureau of Census, "California County Business Patterns in 1991," December, 1993.

Zynolyte Products Incorporated, Telephone conversation with ARB staff, July 26, 1994.

# IX.

# ISSUES

## A. METHYLENE CHLORIDE

### Introduction

Methylene chloride (MC) is a solvent that is currently used in limited amounts in some aerosol coatings. Some of its relevant properties are that it is inexpensive, it is a reasonably strong solvent, and it is not generally included in District, State or U.S. EPA VOC definitions (although the BAAQMD is an exception). Because of these properties it is an appealing solvent for manufacturers to consider when reformulating their aerosol coatings to meet the VOC standards in the proposed regulation. In fact, some manufacturers have indicated that, if allowed, they will use this solvent in their formulations to help them comply with the VOC standards in the regulation. However, the safety of MC in consumer products is in doubt. It has been declared to be both a hazardous air pollutant (HAP) and a toxic air contaminant (TAC), and is considered a probable human carcinogen.

Under the California Environmental Quality Act (CEQA), when feasible, we are required to mitigate potential adverse environmental impacts that may occur as a result of our regulations. Because of the health issues mentioned previously, we consider the possibility for increased use of MC as a potential adverse environmental impact. To address this issue, we have included a provision in the aerosol paint regulation that will require the calculated VOC concentration in aerosol paints to be determined using the combined weight of the VOCs and MC. We believe that this provision will provide a "level playing field" for aerosol manufacturers, yet will discourage the increased use of MC as a way to comply with the regulation. A precedent for this treatment of MC has been established by the BAAQMD, although their approach is somewhat different in that they include MC in their VOC definition. While we have not included MC in the VOC definition in this regulation, we do require MC to be included in the VOC calculation. Although this approach is slightly different than the Bay Area's, we believe that this provision will achieve the intended result, which is to discourage the use of MC as a way to comply with the aerosol paint regulation.

### Background

In 1985, the Consumer Federation of America (CFA) petitioned the U.S. Consumer Products Safety Commission (U.S. CPSC) to declare MC a hazardous and banned substance. In 1988, this petition was denied by the U.S. CPSC. Future regulations, however, were not

ruled out. In 1986, the National Toxicology Program (Department of Health and Human Services) published studies showing that long term exposure to high concentrations of MC will produce malignant liver and lung tumors in mice and benign mammary tumors in female rats. As a result of these studies, MC was declared a B2 probable human carcinogen by the U.S. EPA. The U.S. EPA determined that although there was inadequate human evidence, there was sufficient evidence of carcinogenicity in animals. Specifically, cancers of the liver, lung, mammary, and salivary glands were observed along with leukemia and genotoxic effects.

In 1986 the U.S. CPSC and U.S. EPA conducted a nationwide survey to determine the extent of consumer exposure to MC. The results showed that consumers could be exposed to hazardous concentrations of MC if they used products in areas with inadequate ventilation. The same year, the U.S. CPSC proposed to declare MC a hazardous substance. The proposed rule was opposed by the Halogenated Solvents Industry Alliance (HSIA) and the National Paint and Coatings Association (NPCA) on grounds that MC is not a likely human carcinogen. Based on submitted comments, the U.S. CPSC withdrew the proposed rule. However, both HSIA and NPCA agreed that hazard labeling (under the Federal Health and Safety Act) of certain MC containing consumer products (including spray paints) is justified (U. S. Consumer Product Safety Commission, 2/24/93). Due to consumer pressure, many manufacturers chose to quit using MC.

In terms of other regulatory activity, several state and federal agencies have taken action on MC. In 1988 MC was added to the Proposition 65 list of "Chemicals Known to the State to Cause Cancer" (Safe Drinking Water and Toxic Enforcement Act of 1986). The ARB identified MC as a TAC, with no identified threshold for cancer, through its AB 1807 process in 1989 (ARB, May 1989). Methylene chloride has also been identified as a HAP pursuant to section 112(b) of the federal Clean Air Act Amendments of 1990 [42 U.S.C. Section 4712(b)]. The U.S. EPA designated MC as a HAP because it was known to have, or may have, adverse effects on human health or the environment.

In 1992 the results of an indoor air "cluster project" were released by the U.S. EPA Office of Pollution Prevention and Technology (U. S. EPA, 1992). The project was conducted to categorize aerosol paints by major use areas, and to assess the chemical hazards and risks of aerosol paint use. Methylene chloride was one of the solvents found in aerosol paints for which the noncancer and cancer risks were evaluated. As described below, MC was assigned a hazard ranking of "high" and was ranked the highest of all solvents in the "Relative Risk Index" for both occupational and consumer exposures.

The cluster project qualitatively scored a "level of concern" for each chemical as low, low to moderate, moderate, moderate to high, or high. Methylene chloride ranked in the 'high' category based primarily on liver toxicity and the U.S. EPA weight of evidence classification of B2 (probable human carcinogen). The study predicted a potential excess, upper bound cancer risk for persons exposed to MC of six potential cancer cases in 100,000 individuals; for regulatory purposes, outdoor exposure levels are generally regulated at

1-10:100,000 and in some cases 100:100,000. For occupational exposures, the study predicted a potential upper bound cancer risk of 1:500. The analysis also provided a relative hazard scoring to compare volatile or non-volatile aerosol spray paint components to which workers and consumers are exposed. The results of the analysis for short term, showed that MC ranked highest for both occupational and consumer use.

The study also developed "hazard quotients," (HQ) for noncancer effects for the solvents in aerosol paints. A HQ greater than 1 indicates that there may be potential noncancer effects. For MC, noncancer effects include central nervous system depression. A HQ is a ratio of the lifetime average daily dose or average daily dose (for occupational exposures) to the inhalation reference dose (RfD) and the RfD is a level below which no adverse health effects are anticipated. The consumer HQ for MC ranged from 0.21 - 0.56 (high end); occupational exposures ranked from 0.25 to 40. Although the HQ for consumers was not greater than 1, there are many indoor air sources of MC and additional use of MC in aerosol paints could increase the concentration indoors above a HQ of 1. In a study conducted by the ARB in Woodland, California in 1991, MC was the top ranking VOC out of 11 measured and indoor concentrations of MC were at least five times higher than outdoor concentrations (ARB, 1992).

Finally, California's Air Toxics Hot Spots Program requires specified facilities to determine the nature and extent of their air toxic emissions; to notify the public of significant potential risks; and to reduce significant risks from near-source exposures. Methylene chloride is one of the toxic air pollutants for which facilities assess potential cancer and noncancer risks. After evaluating the potential health risk, the facility may need to notify the surrounding residents of the potential risk, and develop a risk reduction audit and plan.

**Issue Summary**

There are two conflicting issues. First, MC has some appealing features that increase the potential for its use to escalate under the aerosol paint regulation. Second, MC has been declared a probable human carcinogen, is included on the Proposition 65 list as a cancer-causing chemical, and is a HAP and a TAC. Because of these two conflicting issues it is important to structure the aerosol paint regulation in a manner which will discourage completely unrestricted use of MC in aerosol paints, yet provide manufacturers with an "even playing field" in which to conduct their business.

**Use of MC in Spray Paints**

In 1993, the ARB conducted a survey of hand-held aerosol spray paints sold in California in 1992 (Battelle Memorial Institute, 1994). The data presented below include both the results contained in the Battelle Report and the information contained in surveys received after the Battelle Report had been finalized. The information requested included product formulation data and sales data and was used to estimate emissions from spray paints in California. Sixty-two companies submitted data on 35 coating categories (Battelle Report,

1994). The data presented below include both the results contained in the Battelle Report and the information contained in surveys received after the Battelle Report had been finalized.

The survey results provided us with the information necessary to determine, among other things, pounds of aerosol coatings sold which contain MC, weight percentage of MC in these products, total MC emissions and MC emissions by category. In summary, 19.3 million pounds of aerosol paint were sold, resulting in an estimated 14.8 million pounds of VOC emissions in 1992. Of the 19.3 million pounds of aerosol coatings sold, about 0.9 million pounds, or approximately 5 percent, contained MC. These coatings resulted in approximately 300 thousand pounds of MC emissions in 1992. The 1992 MC emissions were equivalent to approximately two percent of the total aerosol emissions.

Methylene chloride use was reported in 15 of the 35 categories. Table IX-1 presents the categories containing MC, and the MC emissions generated by each category. According to these data, non-flat paints are by far the largest contributor to MC emissions, accounting for approximately 72 percent of the 1992 MC emissions.

Ten companies reported the use of MC in some of their products. The lowest MC concentration reported was 11 percent and the highest 50 percent, with an average MC concentration of 34 percent. The majority of MC emissions (99 percent) are generated from products that are designed for home and home and industrial use. Only one percent of the MC emissions are from products designated solely for industrial use.

**Table IX-1**

**Methylene Chloride Emissions per Category**

| Paint Category | MC emissions (pounds/year) X 1000 in 1992 | Percent of total MC emissions per category |
|---|---|---|
| Non-Flat | 220 | 72 |
| Metallic coatings | 16.7 | 5.4 |
| Primer | 14.3 | 4.6 |
| Flat | 11.3 | 3.7 |
| Hobby/Model/Craft clear, metallic | 10.5 | 3.4 |
| Auto Body Primer | 7.6 | 2.4 |
| Vinyl-Fabric-Polycarbonate | 6.8 | 2.2 |
| High Temperature | 6.1 | 2.0 |
| Automotive Bumper and Trim | 5.1 | 1.6 |
| Clear coatings | 3.0 | 1 |
| Ground Traffic | 1.6 | 0.5 |
| Automotive Exact Match | 1.5 | 0.5 |
| Other Specialty Coatings | 2.5 | 0.8 |
| **Total** | **307** | **100%** |

Note: Because the values have been rounded, the category emissions and MC percentage values totals may not match those values seen in the totals.

**How are we limiting MC use, and why have we chosen this approach?**

During the course of developing the proposed regulation, several different options were explored with the workshop participants. These options include:

Remove all MC provisions from the regulation

This option would allow unrestricted use of methylene chloride. This would resolve the fairness issue by allowing every manufacturer to use MC. However, this option was rejected because manufacturers have commented that if MC use were unrestricted, they would be forced to use MC in products which do not now contain MC in order to remain competitive with manufacturers that presently use MC. Therefore, emissions of MC would probably increase.

Prohibit any new uses of MC, but allow its use in products that contained MC as of January 1, 1993

Under this option, only products that contain MC as of that January 1, 1993, could continue to do so. Additionally, manufacturers could reformulate products to lower the VOC content, so long as the concentration of MC does not increase. This option would enable manufacturers that used MC as of that date to meet the standard with MC. However, this would provide an unfair competitive advantage to manufacturers who use MC. Emissions of MC could go up if the market share of MC-containing products increases.

Include a sales cap for MC

This option would place a cap on the emissions of methylene chloride by limiting the sales of products containing methylene chloride. This option would complicate compliance monitoring. This option, like the previous provision, would enable manufacturers to meet the standard using MC. This would allow them to sell their products more cheaply, thus granting them a competitive advantage. There would be no increase in MC emissions under this provision.

Ban the use of MC in aerosol spray paints

This option would level the playing field. However, companies that currently use MC may view this as unfair. There would be a decrease in MC emissions under this provision.

Allow use of MC for all manufacturers, but calculate the VOC concentration using the combined weight of VOCs and MC

This option represents ARB Staff's recommendation and is described in more detail below. Under this option, the VOC standards in the proposed regulation would apply to the combined weight of VOC and MC. This option is similar to the approach taken in the Bay

Area Air Quality Management District's aerosol paint rule.

**ARB Staff Recommendation**

Staff's recommendation is incorporated into the proposed regulation in section 94522(h) which requires the calculated VOC concentration in aerosol paints to be determined using the combined weight of VOCs and MC. Although ARB excludes MC from the VOC definition, we believe that including MC in the VOC calculations is the best way to manage the conflicting issues of fairness and risk to human health.

A precedent has been set for this in the BAAQMD, although they approached this issue slightly differently, in that their aerosol paint regulation includes MC in the VOC definition. According to the District, this approach has been found to be acceptable to manufacturers. Additionally, an increase in MC emissions due to this provision has not been observed in the Bay Area. We decided to structure the MC provision slightly differently from the Bay Area's primarily because we wanted to avoid including MC in the VOC definition. This structure allows us to keep the VOC definition in this regulation consistent with the majority of the districts and the U.S. EPA.

This provision addresses the fairness issue by allowing every manufacturer to use MC. At the same time, it limits the potential for the use of MC to increase by removing major incentives for its use. First, it would be counted as a VOC. We expect that by allowing manufacturers to use MC <u>instead</u> of VOCs rather than <u>in addition</u> to VOCs, use of MC will be much less attractive. With that incentive missing, it is less likely that manufacturers will opt to reformulate their currently MC-free products. Second, MC has a high density when compared to many other commonly used non-chlorinated solvents (1.325 g/l for MC, versus toluene, with a density of 0.867 g/L). Therefore, replacing an equivalent volume of hydrocarbon solvents with MC will result in a higher calculated VOC concentration, again discouraging its use. While the drawback to this approach is that manufacturers could theoretically increase the amount of MC currently being used, we believe it is unlikely that many manufacturers will reformulate their paints to contain MC, since they have bowed to consumer pressure and voluntarily refrained from its use in the past.

**Comments we have received in regard to this provision**

1. Comment: The ARB does not have the authority to regulate MC, as it is not considered a VOC.

   Response: As discussed previously, we are required by CEQA to identify and mitigate potential adverse environmental impacts that may occur as a result of our regulatory efforts. As we consider the possibility of increased use of MC to be a potential adverse impact, it must be addressed.

2. Comment: It is not necessary to regulate the use of MC in aerosol coatings as there are no health risks associated with its use.

Response: Potential cancer effects, liver toxicity, and central nervous system depression are associated with exposure to MC. In 1988 MC was added to California's Proposition 65 list of "Chemicals Known to the State to Cause Cancer"; in 1989 MC was identified as a TAC under California's air toxics law (AB 1807); and in 1990 U.S. EPA identified MC as a HAP.

3. Comment: The ARB should refrain from including any provisions regulating the use of MC until a survey substantiates an increase in the use of MC in response to the aerosol paint regulation.

Response: Again, we must mitigate potential adverse impacts under CEQA. We cannot wait until the potential adverse impact occurs to consider mitigation measures.

## B. LACQUERS

### Introduction

During the development of this proposed regulation, we have received requests to include a general use lacquer category in the regulation. According to one manufacturer, lacquers have properties such as fast dry times and recoatability that make them attractive to hobbyists and semiprofessionals. It was also claimed that these users may switch to air brushes or quart containers of high VOC brush-on paints if lacquers were unavailable, resulting in an increase in VOC emissions.

We believe that aerosol paints based on other resin systems ("enamels") are adequate to meet consumers needs. In addition, as explained in chapter VII, "Environmental Impacts," we do not believe that an increase in emissions would result if lacquer products were not available to consumers. However, we also recognize that lacquers have traditionally been offered in the mix of products available to consumers. Therefore, we are proposing a temporary higher VOC limit for lacquers. We believe this will allow additional time for manufacturers to develop alternatives to lacquer formulations, and will reduce the economic impact of the regulation.

### Background

1. <u>What is a "lacquer"?</u>

General purpose flat or nonflat (glossy) aerosol paints may be broadly classified as either "lacquers" or "enamels." Lacquer paints utilize resins (such as nitrocellulose or acrylic

lacquers) which dry primarily by solvent evaporation, while the term "enamel" is used in the aerosol paint industry to describe a wide variety of paints based on resins which dry by a chemical crosslinking reaction. Lacquers are generally higher in VOC than enamels, typically ranging from about 85-90 percent VOC. At this time, we are unaware of technology available to reformulate lacquers to meet the 60-65% VOC standards proposed in the draft aerosol paint regulation (which can be achieved by enamels).

2. What properties distinguish lacquers from enamel aerosol paints?

There are many different properties of importance to the paint formulator and consumer, and these properties vary with the individual formulation. However, in general, there are some differences between lacquers and enamels. Enamels tend to be more durable in outdoor environments overall than lacquers. Lacquers, on the other hand, have quicker dry times, recoatability at any time, and according to one manufacturer, better gloss retention.

Regarding dry time, aerosol lacquer paints currently dry "tack-free" (no longer tacky on surface) in 10 to 20 minutes. Enamels vary widely in their tack-free dry times, with some products currently approaching the dry time for lacquers, and others taking 2 hours or more. At the proposed 1996 VOC standards in the regulation, the dry time for enamels would probably be slower due to differences in the resins used and the higher solids levels used in solvent-based products. Some water-borne enamels which currently comply with the proposed 1996 standards are reported to have tack-free dry times of 1-2 hours.

Another measurement of dry time is the "dry through" time (which means the coating can be handled). Enamels typically have dry-through times of 2 hours or more, compared to lacquers, which have "dry through" times of an hour or less. The dry-through time for enamels may be longer for products meeting the 1996 standards proposed in the aerosol paint regulation.

Recoatability refers to the ability to apply a second coating without "wrinkling" or "lifting" of the second coating. Lacquers can generally be recoated at any time, while many enamels have a recoatability "window". While the recoatability window varies, enamels often require subsequent coatings to be applied within an hour or two, or after several hours or days. However, there are some enamels that can be recoated at any time, like lacquers.

Gloss refers to the amount of light reflected off the coating. According to proprietary data provided by aerosol paint manufacturers, some enamels currently have gloss measurements as high or higher than those of lacquers. However, according to data provided by one manufacturer, lacquers retain their gloss over time longer than enamels upon exposure to UV radiation. Nevertheless, since lacquers are reportedly not as durable as enamels in out-of-doors environments where exposure to UV radiation is greatest, this may not be a major concern.

3. What is the market share held by lacquers?

General use lacquers hold a smaller, although significant, share of the market as compared to enamels. The ARB Aerosol Paint Survey did not collect data specifically for lacquers. However, we estimate the market share held by general use lacquers to be about 10 percent (EPA).

**ARB Staff Recommendation**

Under the proposed draft regulation, general use, pigmented (not clear) lacquers would be provided with an 80 percent VOC limit for two years beyond the January 1, 1996 date of the initial VOC limits. After this date, lacquers would be required to meet the 60 and 65 percent VOC standards for flat and nonflat pants, respectively. Based on discussions with industry, we believe this provision will allow manufacturers adequate time to develop alternatives to current lacquer formulations, reducing the economic impacts of the regulation. and allowing for a smoother transition when the regulation is implemented in 1996.

## C. VOC STANDARDS FOR DECEMBER 31, 1999

**Background**

The December 31, 1999 VOC limits were designed to achieve a 60 percent reduction in the emissions from aerosol paint relative to the 1989 baseline year, as required by the Health and Safety Code section 41712(f). The limits were based on a draft SCAQMD aerosol paint regulation that was also designed to achieve a 60 percent reduction in emissions. The 60 percent emission reduction was calculated using data on the VOC content of aerosol paints in 1989 based on a National Paint and Coatings Association (NPCA) survey. In calculating the emissions reductions, it was assumed that the sales of aerosol paints in 1999 will be same as in 1989.

Industry representatives have stated that the 1999 standards are not commercially and technologically feasible based on existing technology. One manufacturer has also reported a drop in sales of aerosol paint in California since 1989 due to a variety of factors, including anti-graffiti laws which require aerosol paints to be locked-up on store shelves. This manufacturer has stated that they believe this is a permanent reduction in sales and emissions, and that the 1999 VOC limits are more stringent than necessary because they do not account for this reduction in sales.

As explained earlier in this report, the proposed regulation requires that a public hearing be held prior to December 31, 1998 to evaluate the commercial and technological feasibility of the 1999 standards. We will be working with manufacturers prior to this hearing to assess the progress manufacturers have had in meeting the 1999 standards. These efforts will include meetings and workshops with industry, and review of the VOC survey

information and research and development reports required to be submitted to ARB. If the standards are not found to be feasible they can be delayed for up to five years and/or modified to appropriate levels.

Regarding the reported drop in sales of aerosol paints, ARB's Aerosol Paint Survey of 1992 sales did show lower sales and emissions relative to other earlier estimates. However, we do not believe that the 1999 VOC limits should be relaxed at this time based on the survey results for several reasons. First, we do not believe that the ARB survey reached all manufacturers, or that the reporting of sales was complete for all manufacturers. Second, we expect that population increases in the future may offset any reduction in per capita sales by the year 1999. Population forecasters have estimated the population increase in California to be 13.2 or 21.6 percent between the years 1990 and 2000, depending on the source (DRI/McGraw-Hill;California Department of Finance). In addition, the drop in sales reported by manufacturers may be in part due to the recession. Therefore, as the economy improves in California, sales per capita may improve. Such a trend is seen nationally, as sales of aerosol paints have increased between 1991 and 1993 (CSMA Pressurized Products Survey).

**ARB Staff Recommendation**

We propose that we evaluate the impact of product sales on emission reductions during the required 1998 public hearing to review the 1999 standards for commercial and technological feasibility. The proposed regulation requires that manufacturers report another sales survey for the 1997 calendar year prior to this hearing. After reviewing this later survey, we will be in a much better position to predict the effect of product sales on emissions for 1999. If reductions in sales are found to require modifications to the 1999 standards, the modifications could be made along with any modifications necessary due to the commercial and technological feasibility of the standards.

## D. AEROSOL PAINTS ASSEMBLED FROM AEROSOL CONTAINERS OF PROPELLANT

**Background**

Under section 94522(e)(2), aerosol paints assembled by adding bulk paint to aerosol containers of propellant are required to meet the same VOC limits as products made by manufacturers.

Industry representatives have argued that these aerosol paints should be exempt from the regulation because they represent a small fraction of the aerosol paint market, and because it would be too difficult for the paint users to determine compliance with the proposed regulation.

## ARB Staff Recommendation

We believe that it is only fair to require aerosol paints made with these systems to meet the same VOC limits as products made by the manufacturer. Otherwise, a loophole would be created for these products, allowing for greater VOC emissions and an unfair advantage to competing products sold by manufacturers.

Aerosol paints assembled with aerosol cans of propellant are made in at least two different ways. In some systems, specialized machines are used to manually pump bulk paint into aerosol cans of propellant and solvent. These systems are most often used in industrial settings where it is desired to make aerosol touch-up paints using the same paints used in industrial painting operations. They are also used by businesses which specialize in making exact match aerosol paints for automobiles. In another type of system, bulk paint is held in a container which attaches to a can of propellant. When the system is sprayed, bulk paint is drawn out with the propellant. This system is marketed for use by consumers or businesses.

We believe that the manufacturers of these products could supply technical information to the buyers of these products which would allow them to ensure that they are making complying aerosol paints. This is especially true of industrial operations, which must routinely ensure compliance with a variety of environmental regulations.

## REFERENCES


Air Resources Board, Staff Report - Proposed Identification of Methylene Chloride as a Toxic Air Contaminant, May, 1989.

Air Resources Board, Technical Support Document - Proposed Identification of Methylene Chloride as a Toxic Air Contaminant, May 1989.

Air Resources Board, Indoor Pollutant Concentrations and Exposures, Prepared for the Air Resources Board, Contract No. A833-156, January, 1992.

Air Resources Board, A Study to Develop Statewide and County-Level Economic Projections, Volume I, Prepared for the Air Resources Board, Contract Number: 92-326, August 1994.

Battelle Memorial Institute, Survey of Emissions from Solvent Use-Volume I: Aerosol Paints, Prepared for the California Air Resources Board, Contract: A132-085, September 16, 1994.

California Department of Finance, "Population Projections by Race/Ethnicity for California and its Counties 1990-2040," Report 93 P-1, April, 1993.

Chemical Specialties Manufacturers Association Incorporated, "Aerosol Pressurized Products Survey United States 1992."

U.S. Consumer Product Safety Commission, Briefing Package - Current Information on Methylene Chloride (DCM), February 24, 1993.

U.S. Environmental Protection Agency, RM1 Dossier: Aerosol Spray Paints Indoor Air Screening Cluster Final Draft, December 28, 1992.

# X.

## AMENDMENTS TO THE ALTERNATIVE CONTROL PLAN TO INCLUDE AEROSOL PAINTS

### A. CURRENT REGULATORY APPROACH: TRADITIONAL CONTROL WITH FLEXIBILITY

The proposed aerosol coatings regulation achieves reductions in VOC emissions through mandatory compliance with specified VOC standards. The use of these VOC standards is often referred to as a "traditional control l" regulatory approach. Although this terminology implies a certain prescriptiveness, manufacturers have flexibility in deciding how to formulate products, provided the products meet the applicable VOC standards. A higher level of flexibility, in which manufacturers can choose the product lines to be reformulated and the extent of reformulation, will provide even more economic and marketing benefits to manufacturers and consumers of aerosol coating products.

### B. LOWER OVERALL COSTS THROUGH ADDITIONAL FLEXIBILITY

For years, various environmental regulatory programs have relied on flexibility to help achieve environmental goals at lower costs. Many of these programs incorporate high levels of compliance flexibility through the well-established concept of emissions averaging or bubbling. The existing literature and economic theory support emissions bubbling as an effective, cost-minimizing supplemental program for reducing VOC emissions from pollution sources, including aerosol coatings. Significant cost savings have been determined or projected for programs using emissions bubbling or averaging, such as New Source Review (NSR), the federal leaded gasoline phasedown program, and the South Coast AQMD's Regional Clean Air Incentives Market (RECLAIM). [ARB, August 1994]

### C. THE ALTERNATIVE CONTROL PLAN

To provide a high level of flexibility to manufacturers affected by the proposed regulation, while preserving the target emission reductions, we are proposing to allow the aerosol coating products to be included in the Alternative Control Plan (ACP) regulation. We are proposing that aerosol coating product ACPs operate separately from ACPs approved for products subject to the consumer products regulation (Title 17, CCR, Division 3, Chapter 1, Subchapter 8.5, Article 2, sections 94507-94517). In other words, aerosol coating products and consumer products would not be allowed to be sold under the same ACP. This bifurcation of the ACP programs is proposed to address the competitiveness concerns raised

by small aerosol coatings manufacturers during the rulemaking process. At the January 19, 1995 workshop, manufacturers who produce both consumer products and aerosol coating products did not object to the proposal to bifurcate the ACP program for aerosol coatings and consumer products.

The following discussion provides an overview of the development, benefits, and impacts of the ACP regulation as a supplement to the existing consumer products regulation and the proposed aerosol coating products regulation. The discussion is presented in a question-and-answer format to address the most frequent questions asked about the ACP.

Analyses of the potential economic and environmental impacts of the ACP were conducted during the development of the ACP regulation for consumer products. We believe all of the major assumptions and conditions contained in those analyses are fully applicable to the proposed amendments to the ACP to include aerosol coating products. Consequently, we believe the conclusions reached in the previous analyses also apply to the potential impacts from the proposed regulation. We have briefly reiterated the results of those analyses in this discussion. For a more complete discussion of the ACP regulation and its potential impacts, the reader is referred to the staff report for the ACP regulation. [*Id.* at pp. VI.1-24]

<u>What is the ACP?</u>

The ACP regulation, approved by the Board on September 22, 1994, is a voluntary, market-based regulation which employs the well-established concept of an aggregate emissions cap or bubble. An emissions bubble places an overall limit on the aggregate emissions from a group of products, rather than placing a limit on the VOC content or emissions from each individual product. As a supplement to the existing consumer product regulation and the proposed aerosol coating regulation, the ACP will provide a high level of flexibility to participating manufacturers. By design, the ACP will provide this additional flexibility while preserving the environmental benefits of the existing consumer product regulations and the proposed aerosol coatings regulation.

Goals for the ACP were established early in its development. The seven goals for the ACP that were mutually agreeable to the ARB staff and industry representatives state that the ACP should:

- be a voluntary alternative to the VOC standards,
- be fair,
- be flexible,
- allow for growth of product sales while achieving emission reductions,
- apply to as many types of products as possible,
- be enforceable, and
- be binding for both the ARB and the participant.

Manufacturers who voluntarily choose to enter the ACP program would select the products and formulate a detailed ACP bubble program ("ACP plan") for those products. Approval of an ACP plan would be contingent on whether it satisfactorily meets the approval process requirements. An approvable ACP plan must demonstrate that the total VOC emissions under the bubble would not exceed the emissions that would have resulted had the products been formulated to meet the VOC standards. In addition, the proposed plan must be based on accurate and enforceable records of ACP product sales in California to ensure that all emission reductions will be real and quantifiable.

Once approved, the manufacturer must sell its products in accordance with the conditions contained within the ACP plan. Under an approved ACP plan, the manufacturer could sell products that exceed the VOC standards specified in the existing regulations, provided that the emissions from these high-VOC products will be sufficiently offset by the emissions from products reformulated to "overcomply" with the VOC standards. Overall, compliance with approved ACP plans will ensure that the total VOC emissions from the selected aerosol coating products will be no greater than the aggregate emissions that would have occurred from those products had they been reformulated to meet the proposed VOC standards.

Why are we proposing to include the proposed regulation in the ACP?

We are proposing to include the aerosol coating products regulation in the ACP regulation for several reasons: (1) to provide manufacturers of aerosol coatings the same, higher degree of compliance flexibility afforded to manufacturers of other consumer products subject to the existing consumer product regulations, (2) to achieve equivalent emission reductions by utilizing market forces, and (3) to lower the manufacturers' overall cost of reducing VOC emissions from aerosol coating products, thereby reducing overall societal cost impacts to consumers. By using market forces in a regulatory program such as the ACP, the ARB can preserve the emission reduction benefits from the proposed regulation on aerosol coating products, while providing greater flexibility to manufacturers at lower overall compliance costs.

How was the ACP developed?

We developed the ACP regulation through extensive consultations with industry, government regulatory representatives, and other interested parties. During the rulemaking process for the Phase II amendments to the consumer products regulation (late 1991), manufacturers expressed a desire to work cooperatively with the ARB staff to develop a market-based program that would achieve the same goals as the existing regulations but with greater flexibility and at a lower cost. Because the manufacturers' desire for added flexibility was consistent with the Board's consumer products control plan for developing market-based programs, the staff began the ACP workshop process in January 1992. This desire for additional flexibility was echoed by many aerosol coating product manufacturers during the development of the proposed regulation.

We developed the ACP over the course of nearly three years. In that time, we held seven public workshops to discuss numerous drafts, regulatory concepts, and implementation issues. We also discussed the ACP regulation in several workshops during the development of the proposed aerosol coating products regulation. In these workshops, many of the workshop participants expressed support for the additional flexibility provided by the ACP regulation.

What changes to the ACP regulation are necessary to include aerosol coating products?

The proposed changes to the ACP regulation are highlighted in the modified ACP regulation shown in Appendix H of this report. To include aerosol coating products as a separate ACP program from ACPs covering consumer products, we are proposing changes to sections 94540 (Purpose), 94541 (Applicability), 94542 (Definitions), 94543 (Requirements and Process for Approval of an ACP), 94547 (Surplus Reductions and Surplus Trading), 94550 (Modification of an ACP by the Executive Officer), and 94551 (Cancellation of an ACP). In addition, we are proposing changes to section 94553 (Other Applicable Requirements) to clarify that all applicable requirements in the proposed regulation remain in effect for aerosol coating products sold under an approved ACP plan. Moreover, other changes to section 94553 are proposed to clarify that Bay Area Air Quality Management District (BAAQMD) Rule 8-49 requirements remain in effect for all aerosol coating products in an approved ACP which are sold, supplied offered for sales, or manufactured for use in the BAAQMD.

What are the potential environmental impacts of including the proposed regulation in the ACP regulation?

ARB staff have analyzed the potential environmental impacts from consumer products sold under approved ACP plans. [*Id.* at pp. VI.1-VI.7] We have also considered the potential environmental impacts from including the proposed aerosol coating products regulation in the ACP regulation. This analysis was conducted pursuant to the requirements of SB 919 (Stats. 1993, Chapter 1131). Among other provisions, SB 919 amended the California Environmental Quality Act (CEQA) by adding new Public Resources Code section 21159. With respect to the inclusion of the proposed regulation in the ACP regulation, Public Resources Code section 21159 requires the ARB to conduct an environmental analysis which includes, at a minimum, all of the following: (1) an analysis of the reasonably foreseeable environmental impacts of the methods of compliance, (2) an analysis of the reasonably foreseeable feasible mitigation methods, and (3) an analysis of the reasonably foreseeable alternative means of compliance with the regulation.

Aerosol coating products share many important features with other consumer products evaluated in the environmental impacts assessment conducted during the ACP's regulatory development. These similarities include, but are not limited to, the types of propellants and solvents used, the materials used for aerosol can manufacturing, and the distribution patterns for aerosol coating products. Because of these similarities, we believe the same conditions

and assumptions considered in the previous environmental impacts assessment also apply to the proposed amendments to the ACP regulation. Therefore, based on our previous analysis, we have determined that inclusion of the aerosol coatings products in the ACP regulation will not have any significant adverse impacts on the environment. We conducted our analysis with consideration of potential impacts on water quality, landfill loading, and air quality.

Since the alternative to using the ACP regulation is compliance with the VOC standards in the proposed aerosol coating products regulation, ARB staff expects that no significant adverse impacts will occur due to the "reasonably foreseeable alternative means of compliance" with the ACP regulation. In addition, there are no reasonably foreseeable mitigation measures, since the ARB's environmental analysis concludes that neither the ACP regulation nor the aerosol coatings regulation will have significant adverse impacts on the environment. Because of the analysis' conclusion, there are no adverse impacts that would require mitigation.

By design, the ACP regulation would limit the VOC emissions from aerosol coating products under an ACP plan to the amount that would have occurred under the VOC standards in the proposed regulation. Therefore, the primary environmental impact will be a statewide decrease in VOC emissions which will be at least as much as the reductions expected from implementation of the proposed regulation. Since VOCs are involved in the formation of tropospheric ozone, the reduction in aerosol coating VOC emissions from both the proposed regulation and the ACP regulation is expected to result in a net decrease in ground-level ozone and a positive impact on air quality and public health.

<u>What are the potential economic impacts of including the proposed regulation in the ACP regulation?</u>

As required by the Administrative Procedure Act, we conducted an analysis of the economic and cost impacts of amending the ACP to include aerosol paints. To conduct this analysis, the ARB staff relied on both publicly available information on California businesses and the aerosol coating products and consumer products market, the results of the 1991 ARB consumer products registration, and the results of a survey conducted by the ARB staff in October 1993. The 1993 survey covered over 400 businesses which may potentially operate under approved ACP bubbles or can otherwise be affected by the proposed ACP, including aerosol coating product manufacturers. From the survey results and studies using publicly-available data, we conclude that inclusion of aerosol coatings in the ACP will not have any significant adverse economic or competitiveness impacts on California businesses. [*Id.* at pp. VI.8-VI.24]

Overall, the staff expect inclusion of the proposed regulation in the ACP to have beneficial economic impacts as compared to compliance with the VOC standards in the proposed regulation. There is a significant volume of literature which clearly demonstrates that economic benefits can be achieved through programs which provide increased manufacturing and marketing flexibility like the ACP regulation. Because the ACP is

voluntary and imposes no additional costs on firms to comply with the VOC standards in the proposed aerosol coatings regulation, the advantages of entering the program will be determined on a case-by-case basis by each manufacturer who wishes to participate. It is therefore reasonable to conclude that individual manufacturers will not enter the ACP program unless they believe their compliance overall costs will be less than or, at most, equal to the costs to comply with the existing regulations.

Since the ACP should help lower overall compliance costs, we anticipate that the overall cost-effectiveness for participating aerosol coating manufacturers should be lower than the $2.86 to $3.21 per pound of VOC reduced estimated by staff for manufacturers to comply directly with each of the VOC standards in the proposed regulation. Similarly, we expect that the total annual cost to the entire aerosol coating products industry, assuming that some manufacturers choose to operate under an ACP, will be lower than the approximate $12 million to $13 million dollars estimated for compliance with the proposed regulation. This range reflects the wide range of aerosol coating product subcategories and reformulation options available to manufacturers. Because of the high level of flexibility and the potential for lower overall compliance costs under the ACP, we believe the inclusion of the proposed regulation in the ACP will result in consumer impacts that are less than the $0.30 to $0.34 potential cost increase per unit estimated for direct compliance with the proposed VOC standards (California distribution only) or the $0.04 potential cost increase per unit estimated for national distribution of reformulated products.

Because of the similarities between aerosol coating products and other consumer products, we believe the conditions and assumptions used in the ACP Staff Report for other consumer products also apply to aerosol coating products. Based on this assumption, we have determined that inclusion of the proposed regulation in the ACP regulation will not have a significant adverse economic impact on the ability of California businesses to compete with businesses in other states, or on directly affected private persons. Since the ACP would cover all aerosol coating product manufacturers in California which are subject to the proposed regulation, the ACP's impact should be the same for all manufacturers, regardless of their location. In addition, Table X-1 shows that only about 14 percent of potentially affected businesses are located in California. These businesses employ less than 6200 or about 11 percent of total U.S. employment in affected industries. Thus, the ACP's impact on interstate competitiveness for aerosol coating manufacturers would be minimal, since most businesses that may be affected by the ACP are located outside of California.

**Table X-1**
**Financial and Economic Profile of Affected Industry**

| SIC | Number of Employees | | Payroll | | Establishments | |
|---|---|---|---|---|---|---|
| | 1990 Total | CA Share (% of US) | Total ($ million) | CA Share (% of US) | Total Number | CA Share (% of US) |
| 2851 | 6,166 | 11.3 | 189.5 | 11.2 | 200 | 14.1 |

Sources: U.S. Department of Commerce, 1990 California County Business Patterns; U.S. Industrial Outlook 1993.

Moreover, Table X-1 shows that employment in the affected industries totaled less than 6200 in 1990. This represents less than one-half of one percent of total manufacturing jobs in California. These employees, working in about 200 establishments across the state, generated slightly less than $190 million in payroll, accounting for less than one-half of one percent of total California non-farm payroll in 1990. Since the contribution of the affected industries to the California economy is marginal, we expect minor or positive impacts on the creation or elimination of jobs within California as a result of including aerosol coatings in the ACP. Further applying the same analysis used in the ACP Staff Report, we have also determined that the inclusion of the proposed regulation in the ACP should have minor or positive impacts on the creation of new businesses and the elimination of existing businesses within California, and minor or positive impacts on the expansion of businesses currently doing business within the State.

In the long run, we expect that the ACP will provide cost savings to affected industries, thereby improving their profit margins. The increase in profit margins eventually leads to the creation of new jobs. Additional jobs may also be created in businesses which would handle the trading of surplus reduction credits generated under the ACP program. As explained later in this discussion, however, it is possible that some individual businesses (i.e., the competitors of participating ACP businesses) may be adversely affected by the inclusion of the proposed regulation in the ACP, even though the overall economic impact of the ACP will be positive.

How does inclusion of the proposed regulation in the ACP address small business competitiveness concerns?

*Small Business Competitiveness Concern*

All firms may not be affected equally if the proposed regulation is included in the ACP program. Concerns were expressed during the development of the ACP regulation that inclusion of the proposed regulation in the ACP could adversely impact small or one-product businesses. In essence, the concern is that multi-product firms, because of their diversity, may benefit more from the ACP than would small businesses. That is, large manufacturers operating under approved ACPs may be able to lower their production costs to a greater degree than small manufacturers, whether the small firms are operating under their own approved ACPs or manufacturing products to comply with the existing VOC standards.

If the large manufacturers are then able to pass some of these cost savings to consumers in the form of lower prices, the small firms would face increased competition from the resulting price differential. For those small businesses which cannot match the price cuts introduced by the large manufacturers, this scenario could lead to the loss of market share and reduced profitability. In some extreme cases, this could even force some marginal firms out of business.

It is possible that the potential for this type of adverse competitiveness impact can also apply to medium and even some large manufacturers. However, we believe this concern is most applicable to small or one-product businesses. By their nature, some small businesses do not have the product diversity or resources which are comparable to their larger competitors. Thus, we evaluated this concern with consideration to small businesses.

*Discussion*

The concern regarding the ACP's potential effect on competitiveness was raised at various times during the ACP development process. However, no concrete economic data, specific to the individual parties which raised the concern, were provided or made available to the ARB staff for verification of this concern. Nevertheless, we recognize the need to address this concern and have therefore evaluated the ACP's potential competitiveness impacts on small businesses using the best data available to us.

We have evaluated this concern and have determined that such a scenario and its claimed impacts are unlikely to happen for the majority of aerosol coating product manufacturers. However, it is possible that a few manufacturers may be adversely affected by the ACP regulation. We arrived at these conclusions by assessing the likely impacts the ACP may have on California business enterprises, including small businesses, using the results of a survey conducted by the staff and publicly available information.

The competitiveness concern described previously hinges on the characteristics of the aerosol coating products market. The more price-competitive the market, the greater the significance of the concern. Conversely, if the market is not very price-competitive, the impact from the small business concern becomes less likely. The number of manufacturers and marketers, along with their market shares, was used as indicators of the level of competition in the aerosol coating products industry. Market share is defined here as the percentage of total sales of a product category sold by a firm. A high level of competition is indicated when there is a large number of firms which produce aerosol coatings, with a small market share for each firm. The extent of adverse impact on the small firms depends on the level of competition and the ability of large firms to influence the market price for all firms which produce aerosol coating products.

The 1993 survey results provide several indicators which show that there is a high level of non-price competition in the aerosol coating products industry. As Table X-2 shows, there are a large number of aerosol coating product manufacturers/marketers in each firm size category. Out of 89 firms reported selling aerosol coating products, 42 have 100 or less employees, 17 have between 100 and 250 employees, 7 have between 250 and 500 employees, and 23 have more than 500 employees.

**Table X-2**
**Breakdown of Firms by Number of Employees**

| Number of Companies with the Following Employee Workforces | | | | |
|---|---|---|---|---|
| Less than 100 | 100-250 | 250-500 | Greater than 500 | Total |
| 42 | 17 | 7 | 23 | 89 |

Moreover, Table X-3 shows the aggregate market shares (as a percentage of the total market sales, by weight) of the firms in Table X-2 for each firm size category. The survey results show that 59 small firms with 250 or less employees, out of the total of 89 (66 percent), controlled about 68 percent of the market share for aerosol coating product in 1992.

**Table X-3**
**Breakdown of Firms by Market Share**
**(As a Percentage of Total Market Sales, by weight)**

| Aggregate Market Share of Companies with the Following Employee Workforces | | | |
|---|---|---|---|
| Less than 100 | 100-250 | 250-500 | Greater than 500 |
| 46% | 22% | 7% | 25% |

The data in Table X-3 can be further broken down to show the relative distribution of market shares within aerosol coatings industry. As shown in Table X-4, there are many firms with small market shares each in this industry (i.e., market share less than 20% of the total market surveyed). For example, Table X-4 shows that, out of the 89 firms responding to the survey who manufacture aerosol coating products, 86 market shares (by weight) of less than 10% each and 2 firms have market shares between 10%-20% each.

**Table X-4**
**Aerosol Coating Products Market Share Distribution**

| Number of Firms with Market Share (by weight) | | |
|---|---|---|
| Less than 10% | 10% - 20% | Greater than 20% |
| 86 | 2 | 1 |

When combined, the survey results compiled in Tables X-2, X-3, and X-4 show that there is a large number of aerosol coating product manufacturers, each with a small market share. Other studies in the literature also support this finding. [*Id.* at VI.17] The survey results, however, do not provide information on whether the competition in these markets is based on price or other non-price factors. We obtained information on the type of competition in these markets from available public sources. Such information indicate that there is a high level of non-price competition for personal and household products. [*Id.* at VI.17] Given the market and distribution pattern for aerosol coating products, we believe it is appropriate to consider most aerosol coating products as part of the larger category of household products.

With the survey results and the publicly available information, we assumed that the following conditions hold in the real world:

(1) No single firm controls most of the market shares in any product category.

(2) Each manufacturer/marketer has some influence over the price at which it sells its brand of product.

Based on these assumptions, we determined that inclusion of aerosol coatings in the ACP regulation would likely have minimal impacts on most small businesses. Some small firms, however, might experience adverse impacts from increases in price competition for the following reasons.

First, inclusion of aerosol coatings in the ACP may result in a cost-of-production differential between the one-and multi-product firms if the ACP benefits multi-product firms more than one-product firms. The cost differential could allow the large firms to lower their product prices relative to the small firms and capture a larger market share for their products. Second, the multi-product firms may decide to expand the market shares for their products. Under the ACP's emissions averaging, multi-product firms may expand the market shares of their low-VOC products in order to sell their high-VOC products. In either of these scenarios, the result could be that some marginal firms might not be able to withstand the increased competition, and they might lose market share. In extreme cases, these marginal firms may even be forced out of the market.

We believe these scenarios are unlikely to occur to a significant degree for the following reasons. As stated previously, public information indicates that there is a high level of non-price competition in the markets for household products. In these markets, the manufacturers and marketers rely heavily on non-price strategies to establish brand loyalty, such as advertising and the introduction of new products. Second, small firms tend to fill special market niches, in which price may not be the primary factor. [*Id.* at VI.17] For example, it is common knowledge that health-conscientious consumers are willing to pay premium prices for products made with natural or reduced-toxicity ingredients.

Non-price factors, such as brand loyalty and special niches, would allow firms to create a captive market where consumers prefer their particular brand over competing brands. Consumers in these captive markets are willing to pay premium charges for these products. For these reasons, we believe the potential cost differential between one- and multi-product firms, which might result from the proposed ACP regulation, would not necessarily cause extreme hardship on small or one-product firms.

### *Other Available Studies on Small Business Competitiveness*

To evaluate the potential impacts on small business competitiveness which may result from inclusion of the proposed regulation in the ACP regulation, we also reviewed the socioeconomic impacts analysis conducted by the South Coast Air Quality Management District (SCAQMD) for their Regional Clean Air Incentives Market (RECLAIM) program. As discussed in the ACP Staff Report, the Regional Economic Models, Inc. (REMI) model projects that both national and local SIC-28 industries (e.g., Chemicals and Allied Products) affected by RECLAIM should experience average increases or decreases of less than one percent in their profits and selling prices. [*Id.*, at pp. VI.18-19] Thus, the results of the REMI modeling suggest that inclusion of aerosol coatings in a market-based program like the ACP will have minor or positive impacts on the competitiveness of affected industries.

### *Addressing the Small Business Competitiveness Concern - Surplus Credits Trading Program and Bifurcated ACP Program for Aerosol Coating Products*

Although the previous analysis clearly demonstrates that inclusion of aerosol coatings in the ACP regulation would most likely have a beneficial impact on most businesses, we recognize that some businesses may be adversely impacted. To mitigate any potential adverse economic impacts on small businesses and to encourage their participation in the ACP program, we have incorporated a surplus credits trading program targeted specifically for small businesses.

As discussed in ACP Staff Report, a provision that allows only small businesses to purchase surplus reduction credits is included in the ACP regulation. By making the purchase of credits available only to small businesses, we help to ensure that an adequate supply of these credits is available to small businesses for their use. The purchase of such credits can help small businesses to participate in the ACP program by helping them to meet their emissions limits, thereby helping to lower their overall compliance costs through the additional formulation flexibility afforded by the ACP regulation.

In addition, some small manufacturers have expressed a concern regarding their potential competitiveness disadvantage relative to large firms with diverse consumer and aerosol coating product lines. Their concern is that the large firms may be able to achieve significant surplus reduction credits from reformulated consumer products which they can then apply to aerosol coating products under an ACP, either through emissions averaging or the trading of surplus reduction credits. This would enable the large manufacturers to have a marketing advantage in the aerosol coating products market over smaller businesses which do not have diverse product lines.

To further address the concerns of small businesses, we are proposing to establish separate ACP programs for aerosol coating products and consumer products. This bifurcation will prohibit emissions averaging or surplus reductions trading between ACPs for consumer products and ACPs for aerosol coating products. The proposal should help prevent the type

of competitive disadvantage cited previously by the small aerosol coatings manufacturers. However, it should be noted that the proposed bifurcation will prevent consumer product manufacturers, who do not directly compete with aerosol coating manufacturers, from selling surplus reduction credits to the aerosol coating manufacturers.

*Overall Conclusions*

Overall, most affected businesses will benefit from the ACP. The ACP imposes no additional costs to businesses to comply with the VOC standards. Rather, it provides businesses with greater flexibility to meet the standards, thereby inducing innovations and cost savings. Concerns have been raised that the ACP may put some small businesses at a competitive disadvantage relative to the large businesses. According to the ARB survey of affected businesses and other available public information, the potential cost differential which might result from competition under the ACP between small and large firms would not necessarily cause extreme hardship on small firms. However, inclusion of the proposed regulation in the ACP regulation may increase the level of competition for some aerosol coating products, and may lead to the elimination of some marginal producers for those products. The inclusion of the proposed regulation in the ACP may have minor impacts on California employment and payroll. However, the impact is expected to be positive in the long run. This proposal should also have minimal impacts, if any, on the ability of California businesses to compete with businesses in other states.

**REFERENCES**

California Air Resources Board (ARB), Initial Statement of Reasons for Proposed Rulemaking: Public Hearing to Consider Adoption of Proposed Alternative Control Plan Regulation for Consumer Products, Staff Report, Vergara, Floyd V., August 1994, pp. VI.1-28.