THERMO KING

CRYOGENIC TECHNOLOGY
for Transport Refrigeration

Presentation to CARB
Herman Viegas
Thermo King Corporation
December 11, 2003

Benefits of Cryogenics

- Zero diesel emissions
- No fluorinated refrigerants
- Quiet operation
- Fewer moving parts
- Rapid temperature recovery
- Safe operation – No CO2 gas enters cargo space

Commercialization Status

- Truck and Trailer refrigeration units are in production
- Safe and Automated Filling Technology is developed and in commercial use
- CO2 Infrastructure is developed and in commercial use

In Commercial Service

Trailer Single Temperature

In Commercial Service

Truck Single & Multi-Temperature

In Commercial Service

Truck Hybrid (provides boost to diesel powered units)

Validation of Technology

SCAQMD funded study May 99- Sept 00

- Two trailer units operated successfully in local delivery service by In-N-Out Burger
- Very high reliability with very little maintenance
- Temperature control similar to diesel TRU
- Sensitive to price and availability of CO2

Sweden Dept of Energy Funded Study

19 cryo units monitored Spring 02 ~ Jan 03

- CO2 infrastructure needs further development
- Reduce refueling time

Infrastructure

15 Fill Stations currently in operation in Europe and one in Houston

Public Fill Station Gothenburg

Cooling at Depot

Provides environmentally friendly solution to cool truck/trailers at depots

- **No modifications needed to existing fleet**
- **Independent of the diesel TRU and vehicle State of registration**
- **No diesel emissions; No noise; Rapid pull down**
- **Minimizes operating cost - Lower cost diesel technology used over the road**

Stationary Solution

Patent Pending

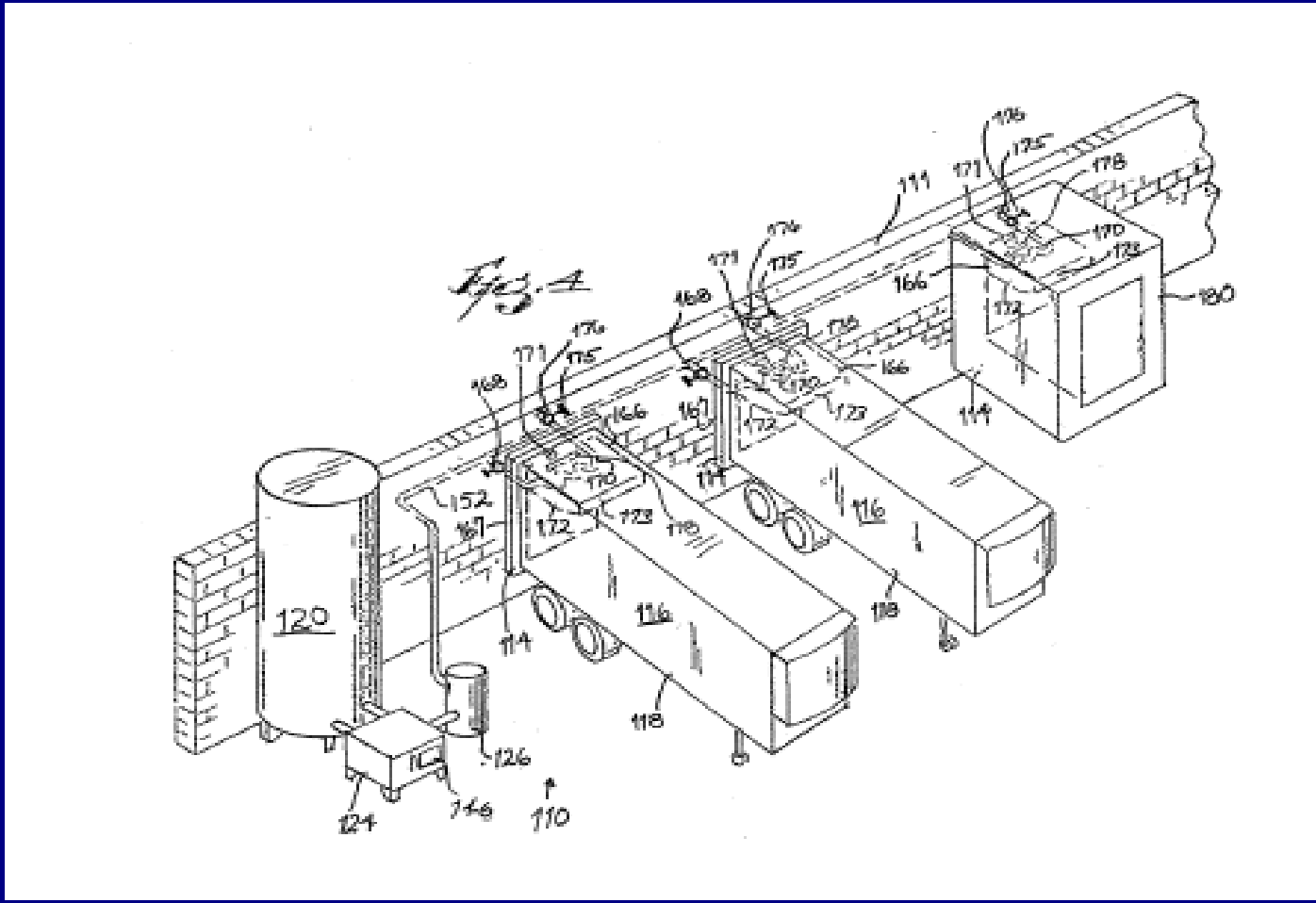

Hybrid Technology

Smaller diesel reefer unit with Cryo Boost

Projected benefits [compared to diesel-only TRU]

Emission reductions (up to)

- NOx 47% HC 84% CO 75% PM 71%

Hybrid technology

- Diesel TRU design optimized for average load
- Cryo system supplements the diesel TRU during peak loads

Questions