RYPOS, Inc.

Active Diesel Emission Control Systems

Overview Summary
Q2 2010

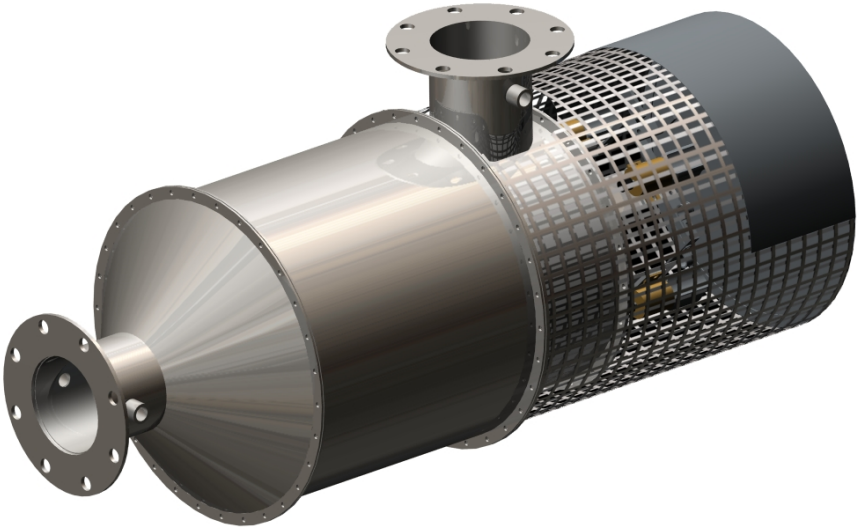

150 Hopping Brook Road
Holliston, Massachusetts 01746

Company Overview

Although there has been a well established market for diesel engine technology for decades, the recent run up in energy prices has made the cost-effectiveness of diesel even more attractive, leading to increasing growth in the market. One impediment to the wider adoption of diesel has been the pollution associated with diesel engines, and the fact that the various different remediation solutions available are suffering from operational drawbacks.

RYPOS, a privately owned company, has developed a diesel particulate filter based on its active regeneration (self-cleaning) technology that addresses the shortcomings of the existing passive ceramic filters. Passive filters, using precious metal catalysts, rely on high exhaust temperature to regenerate or self-clean. These can clog with accumulated soot, which causes high backpressure leading to low engine performance and filter failure.

In contrast, RYPOS' active regeneration technology addresses these limitations by bringing to market an automatic, self-cleaning, energy efficient, reliable particulate filter based on sintered metal fibers which do not rely on exhaust temperature to regenerate. The result is low backpressure that optimizes engine performance.

RYPOS has 40 employees and a 15,000 square foot facility in an industrial / business park in Holliston, Massachusetts. The space is divided equally among offices, laboratories, and final assembly and test. The company does not plan to do any large scale manufacturing, and does not anticipate requiring additional space in the foreseeable future.

New Rypos HQ 150 Hopping Brook Road, Holliston, Massachusetts

History

Founded in 1996 by a distinguished group of scientists and entrepreneurs, RYPOS has spent several years developing, testing, and preparing to market on a full-scale basis its advances in diesel particulate filter technology. RYPOS' pioneering efforts have led to the creation of proprietary control circuitry, four U.S. patents and one pending patent application, protecting the system design and the unique filter cartridge design.

Having done all the needed research and having developed both the needed circuitry as well as the advanced filter design (described below) necessary to advance the technology, RYPOS has spent several years demonstrating its technology with carefully selected users throughout the US and Worldwide.

Market Summary

The diesel engine market is a multi-segment, multi-billion dollar opportunity for RYPOS. There are enormous opportunities on the OEM production side where over a million new diesel engines a year are currently being built, and there is also an enormous retrofit opportunity is such areas as diesel generators, trucks, buses, off-road construction vehicles, and marine applications. Given the size of the market and the amount of capital RYPOS has available to tackle it, the Company believes that its first significant target of opportunity should be the market for stationary diesel generators. Because RYPOS active diesel technology does not require significant engine resources, it is ideal for this application because these generators tend to run sporadically and tend to generate large quantities of soot that need to be removed. Another factor driving this market is rising power consumption coupled with stringent environmental regulations, particularly within the United States in California and New York City Metro Area. RYPOS intends to gain a strong footing in this market, and to then leverage that to attack larger markets both on the retrofit as well as OEM side.

Active Diesel Particulate Filters: The RYPOS Advantage

The RYPOS HDPF/C is a highly effective diesel particulate filter for exhaust emission control. The system consists of filter housing, flow control, electrical control circuit, and removable filter cartridges. The filter itself is composed of sintered fine metal fibers that are shaped into filter elements and then incorporated into filter cartridges. The proprietary filter material is designed specifically to act as both a filter and heating element. The fibers are made of Fecralloy, which contains iron, chromium, aluminium and yttrium. The added aluminium improves resistance to corrosion at high temperature, while yttrium serves to anchor the protective aluminium oxide layer to the surface of the base metal.

One of the great advantages of using these sintered fibers is that they are capable of capturing the very fine carbon particles present in the exhaust stream. It can be used alone or in conjunction with a diesel oxidation catalyst to reduce the soluble organic fraction, gaseous hydrocarbons, and carbon monoxide while suppressing the formation of sulfate.

Photographs of the typical HDPF/C System installation:

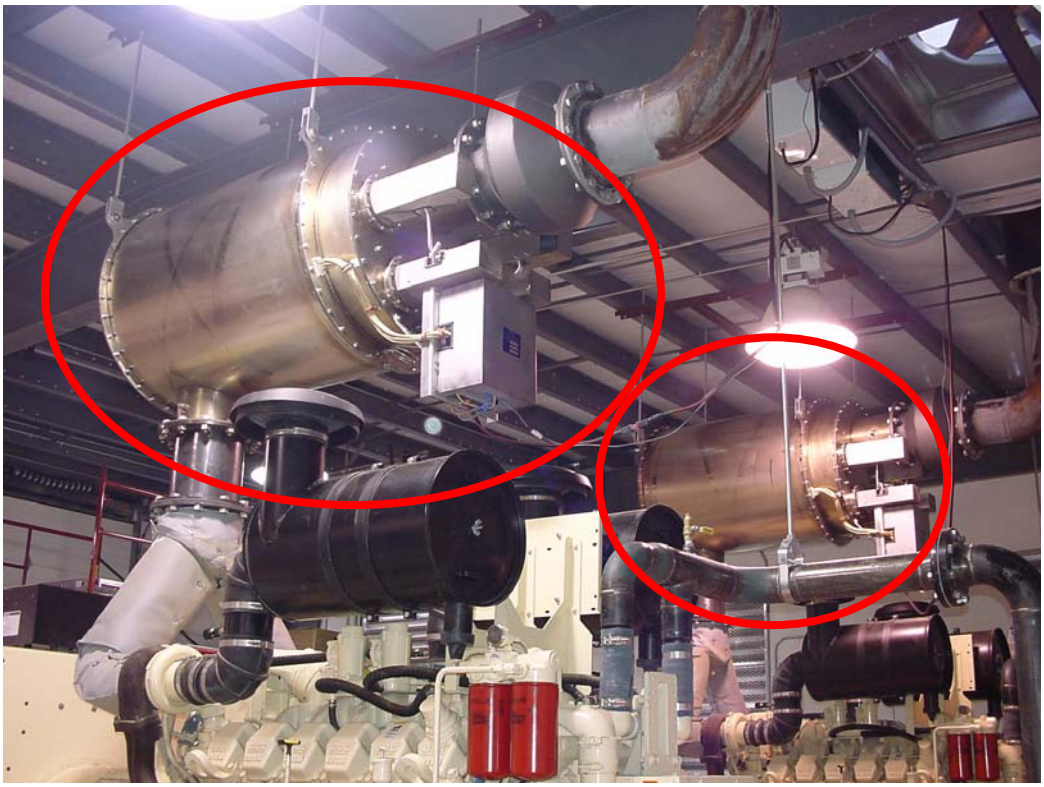

2x 600kW (above)

2MW (above)

The HDPF/C system is an active regeneration system with significantly high energy efficiency and soot holding capacity and is regenerated automatically and **independent** of exhaust temperature. The filter element is electrically heated while the exhaust flow is shut off, thereby saving considerable energy during the regeneration cycle. Each element, which represents a small fraction of the total filter, is regenerated individually to reduce the maximum amount of electrical energy required. It should be noted that the RYPOS HDPF/C is able to capture at least to 85% of the soot present in the exhaust stream. One additional advantage to the RYPOS HDPF/C is that it also serves as a sound absorption device and can be designed to fit the same envelope as the muffler or catalytic converter it replaces.

Operation of the HDPF/C

The operation of the RYPOS HDPF/C is controlled by a microprocessor. The controller monitors the filter and periodically an electric current is passed through a filter element, which also acts as a heating element to burn the accumulated soot. A dedicated power source provides the required electrical current to heat the filter element to the temperature required to burn soot. The regeneration strategy is designed to keep the back pressure below a preset level. Electronic control circuitry is used for:

- Automatic regeneration cycles
- Timing sequence, duty cycle
- Flow control and filter unit selection
- Pressure and temperature sensing

- Electronic switching of filter elements
- Monitoring and remote wireless display

Filter Characteristics

The filter medium is a sintered metal fibre element which is electrically conductive with high soot holding capacity that captures the very fine particles in the exhaust system. The filter is regenerated through the presence of an electric current, sufficient to heat the element to cause the collected soot to burn. The filter and heating element are one and the same.

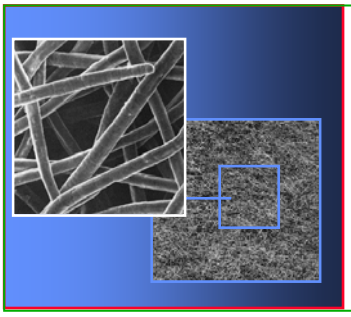

- Electro-conductive
- High porosity (85%)
- Low back pressure
- Withstands high temperatures
- Fast heating (low thermal mass)

Brief Overview of Competing Technologies

There are basically two competitive technologies that can be used to deal with diesel exhaust emissions, namely oxidation catalysts and particulate traps.

- Diesel Oxidation Catalysts (DOC): DOCs are usually constructed on a ceramic or metal substrate coated with a catalytic material. Although a DOC can reduce the soluble organic fraction of the Particulate Matter (PM), it has no effect on the carbon particles. Most systems based on catalytic oxidation achieve only in the order of 20-25% reduction in PM, the level presently approved by the EPA, but that will soon be inadequate when tougher standards are implemented. Furthermore, as soot covers the surface of the catalytic converter, the catalyst quickly becomes ineffective which lessens the performance of the system and shortens the service life. Most of the systems require high exhaust temperatures to initiate and maintain the regeneration, a factor that limits the useful range of these systems.

- Diesel Particulate Filters (DPF): DPFs available in today's market are typically built on a cordierite substrate that traps soot by forcing the exhaust to flow through porous walls in a monolith. A catalyst is coated on the inside surface of the monolith. This lowers the soot combustion temperature, allowing the filter to regenerate (dispose of the soot) at lower temperature than the ignition temperature of soot. An inherent limitation of such systems is that they rely on high exhaust temperatures and are practically inoperable at lower temperatures. For optimal performance, these systems require that the hot duty cycle of the engine be at least 20% of its operation. Some system producers specify a hot duty cycle as high as 40-50% of the engine's operation.

- In some operating conditions, it is difficult to maintain the necessary exhaust temperature required to regenerate this type of filter. Such a situation can cause

excessive accumulation of particulate matter (soot overloading) and clogging of the filter and may eventually lead to uncontrolled combustion resulting in the destruction of the filter. To overcome this problem, some filters have installed electric heaters to maintain the necessary temperature for regeneration, but this is an added cost of operation. Furthermore, these systems require ultra low-sulphur diesel to be operable reliably.

Advantages of the RYPOS approach

- High Performance: Removes at least 85% of soot emissions.
- Energy Efficient: Uses on average less than 1% of the rated horsepower of the engine.
- Automatic Regeneration Control electronics monitor and clean filters during normal operation.
- Reliability: Sintered metal fibers withstand higher temperatures than ceramic substrates in competitive products that may crack and burn through.
- Flexibility: Does not require use of low sulfur fuels and operates under all exhaust temperature conditions.

Additionally, and very importantly, the system has been proven to have little impact on backpressure, a major problem for other competing technologies. The system incorporates a safety valve to protect the engine in case of a system malfunction.

Quick Summary of RYPOS Approach vs. Other Players

RYPOS Active vs. Passive DPFs

RYPOS ACTIVE HDPF/C	PASSIVE DPFS
Sintered Metal Fibers	Ceramic Cell Cordierite Silicon Carbide
Active Regeneration Using Electric Heating	**Passive** Regeneration Using Oxidation Catalyst (precious metal) Or Fuel Additives (heavy metal)
Controlled Regeneration **Not Sensitive** to Exhaust Temperature	**Uncontrolled** Regeneration **Sensitive** to Exhaust Temperature
Not Sensitive to Sulfur	**Sensitive** to Sulfur
Lower Back Pressure/**High** Porosity (< 20 inches of water)	**Higher** Back Pressure/**Low** Porosity (> 40 inches of water)
Sintered Metal Fibers	Ceramic Cell Cordierite Ceramic Fibers Silicon Carbide Fibers
Direct Heating	**Indirect** Heating or Fuel Injection
Low Energy Less than 1% fuel penalty	**High** Energy 5 – 10% fuel penalty

Market Opportunity for RYPOS

Diesel engines play a key role in the global economy, powering about a third of the transportation sector and over 95% of all freight in the transportation of goods. Diesel engines also contribute significantly to power generation and off-road equipment.

Energy efficiency, durability, reliability, and fuel safety are among the factors that encourage the continuous use of diesel engines. Concerns about pollution, however, have prompted the EPA and similar regulating agencies in Europe and Japan to propose increasingly stringent restrictions on diesel engine emissions, thus creating a huge market for pollution control systems. The control of soot, the solid carbon particles in exhaust, has received special attention, since it has been confirmed as a carcinogen by the International Agency for Research on Cancer. Furthermore, a recent report by NASA scientists showed that soot, mostly from diesel engines, is causing as much as a quarter of all observed global warming by reducing the ability of snow and ice to reflect sunlight. These concerns, coupled with the sustained demand for diesel engines, has created a pressing need that must be addressed and opens an enormous market for effective diesel exhaust control technologies.

It is the intention of RYPOS to take advantage of this market opportunity by introducing unique products based on our proprietary and patented filter technology. RYPOS' technology addresses the major shortcomings of competing technologies, namely: excessive backpressure and inadequate regeneration. As described, the Company has developed an intelligent self-cleaning system that efficiently and reliably reduces soot from diesel engines. The technology can be deployed in electrical generators, pumps, compressors and many other stationary/portable applications. RYPOS plans to leverage their **California Air Resource Board (CARB) Level 3 Plus verification** for stand-by diesel generators for market penetration and growth in other diesel industry vertical segments.

Equity Partner

In October 2010, Craton Equity Partners, a leading Southern California clean technology fund, made an $8 million investment in Rypos, Inc.

Craton Equity Partners (www.cratonep.com) is a nationally known and leading Southern California cleantech fund, focused on bringing to market technologies that respond to the effects of climate change and environmental degradation. Craton's investments include green building products, earth heat exchange technology, smart grid technologies and next-generation biofuels. Craton is one of the country's leading voices on sustainable investing and using investment models to respond effectively to the urgent environmental challenges of our time.

Key Market Drivers

- Engine manufacturers, fleet operators and individual users are under increasingly severe regulations from state and federal agencies to curb pollution due to emissions from the trucks, buses, generators, and other heavy equipment for which they are responsible.

- Restrictions and fines for failing to meet these higher standards are forcing operators to search for new ways to achieve compliance. Many of these approaches are costly, inconvenient, and in some cases questionable as to their efficacy, so there is a strong and growing demand for reliable and cost-effective ways to meet these evolving compliance standards.

- Growing public awareness of and demand for tougher air quality standards means that it is a good business practice to be a leader in sound environmental practices and to be able to publicly demonstrate one's commitment to a clean environment.

Market Summary and Analysis

Broadly speaking, the market for RYPOS's products can be broken down into two primary segments:

- Original Equipment Manufacturers (OEMs), and

- Retrofit and after-sale markets

OEM Market

The challenge to the OEMs is to design engines to meet current and future pollution standards while maintaining fuel efficiency and power output. RYPOS' technology has the unique advantage of working independently of the engine, and will thus enable the engine manufacturers to design their engines for optimum performance.

At present, over 1 million new engines are produced every year in the USA, with trucks and buses representing about 50% of that total. RYPOS, Inc. is planning to work with leading OEM manufacturers to having its filter system incorporated as an integral component into future engine designs.

Retrofit Market

The retrofit and after-sales market is estimated to include two to three million diesel engines, but it is characterized by vast segmentation, both in size and operation patterns. The filter technology utilized by RYPOS, Inc., which has the potential to bring aging engines into compliance with EPA regulations, can be used in numerous applications such as:

- Stationary diesel generators **(CARB Verified Level 3+)** for data centers, hotels, hospitals, office buildings, schools, etc
- RTG (rubber tired gantry cranes) **(CARB Level 3+ verification application in process)**

- Locomotive diesel generators **(CARB Level 3+ verification application in process)**
- Truck TRU **(CARB Verified Level 2+, CARB Level 3+ verification application in process)**
- Truck APU **(CARB Level 3+ Verification application in process)**
- Marine diesel **(CARB Verified Level 2+)** applications; marine diesel generators & propulsion
- Heavy off-road mobile construction equipment powered by diesel engines **(CARB Level 3+ Verification application in process).**

The Company has chosen to begin its marketing and sales efforts by focusing on the diesel generator, truck TRU and APU, marine applications, and off-road construction equipment markets, but will also look for other opportunities with additional applications.

Intellectual Property

As mentioned previously, RYPOS has amassed considerable intellectual property as a result of its research and developments. The firm has proprietary control circuitry as well as related firmware.

The RYPOS technology is protected by 4 issued US patents, with an additional application currently being prepared for submission. The patents are all related to the reduction of solid particulate matter in the exhaust of diesel engines.

The first patent, 5,853,437 issued Dec 29, 1998, covers the concept of using sintered metal fiber as a particulate trap, and simultaneously using the filter element as a resistive heating element. This concept enables construction of a diesel exhaust particulate trap that can be regenerated, or self cleaned, during normal operation of the engine, without causing interruptions in service.

The second patent, 6,063,150 issued May 16, 2000, covers improvements in the design to allow more filtration material in a smaller space, by changing the shape of the material and pleating the filter media. The net result is a smaller, lighter, less expensive system.

The third patent, US 2002/0194996 A1, issued Dec. 26, 2002, is quite comprehensive and encompasses utilizing the filter elements in a complete, automatic diesel exhaust particulate treatment system. This patent includes utilizing the filter elements in banks, so that filter elements can be regenerated individually. Also, flow controls are provided that divert the exhaust flow around the filter element being regenerated. This operation is controlled by a microprocessor that monitors back pressure and temperature that are related to the amount of soot collected. The microprocessor controls a power switching network that supplies electrical current to the filter elements as required. Also, a provision is made to incorporate additional after-treatment of nitrous oxides.

The fourth patent, US 2003/0196419 A1, issued October 23, 2003, covers the design of a multi-layer sintered metal fiber pleated filter element. This design incorporates a method to utilize filter media of different porosities to trap various size particulate matter, and also more efficiently utilize the heat generated for oxidation of the accumulated particulate matter. The

net result of this improvement is increased filtration efficiency, and lower power requirements for regeneration.

In addition, RYPOS is preparing to apply for a patent that incorporates treatment for the oxides of nitrogen in diesel exhaust. In certain areas of the US, nitrous oxides are the main contributor to smog and the associated public health problems. This patent application will describe a novel method to add a diesel oxidation catalyst and nitrous oxide reduction for a complete emission control system.

Management Team

The basis of all successful firms is a strong and seasoned team, and RYPOS has put together a stellar management group with talent in all key areas including general management, research and development, engineering, sales, and finance. Upon the completion of the Company's proposed equity financing, the firm will look to staff up across the board, with a particular emphasis on the recruitment of additional personnel to support an enhanced sales and marketing effort. Brief biographies of key players are supplied below.

Peter Bransfield, CEO
Mr. Bransfield has over 20 years experience in starting and building technology companies. As founder and CEO of Altair Avionics, he pioneered a new product into a highly regulated market. He raised over $5 million in venture funds growing the business to over 50 employees operating in two countries until the company's successful acquisition by United Technologies. Skilled in international marketing and OEM sales, he has developed numerous strategic and channel partnerships throughout his extensive career. Mr Bransfield is a graduate of Lehigh University.

Don Simoneau, Chief Financial Officer
Don Simoneau brings over 23 years experience in finance and operational leadership at global high-tech companies. He was most recently the Sr. VP of Operations for cyber security firm Industrial Defender where he was responsible for worldwide sales, professional services, and managed security services. Prior to joining Industrial Defender Inc., Simoneau was CEO at Longwatch, Inc., where he raised venture capital, set up company operations, built the brand and established a North American distribution channel. He began his career in the technical workstation business at Apollo Computer and HP before becoming CFO of SCADA software company Intellution, which grew in sales from $20M to $70M during his tenure. Simoneau also served as CFO of privately held Altair Avionics and supported the sale to United Technologies. He has an MBA from Bentley College and a BS in finance and computer science from Boston College.

Klaus Peter, President
Mr. Peter has over 25 years of design experience in consumer and industrial electronics. In 1984 he was co-founder, Executive VP, Director of Engineering, Treasurer, and a Director of Media Logic, Inc. Mr. Peter was instrumental in creating a line of products that propelled Media Logic to over $28M in sales in 1992, making the company a major player in the worldwide magnetic media tester market. Mr. Peter played an active role in bringing the company public in 1987 and later in having the company listed on the American Stock Exchange. Previous to this, he held the position of Engineering Manager at Digital Equipment Corp. in the data storage division. He

obtained his Bachelor of Science degree in Electrical Engineering from the University of Ottawa, Canada.

Dr. Osama Ibrahim, Vice President
Dr. Ibrahim graduated from the University of Wisconsin-Madison in 1991 with a Ph.D. degree in Mechanical Engineering and a minor in Chemical Engineering specializing in thermodynamics, heat engines, process design and optimization. At the University of Rhode Island, Dr. Ibrahim was directing a multidisciplinary research program with emphasis in energy and air pollution. The objective of his research program was to generate innovative ideas that could lead to more efficient energy systems and protect the environment through pollution prevention and reduction of emissions. In the last 14 years, he has been involved in several research projects on energy systems and diesel emission reduction.

John Brennan, Vice President, Manufacturing
Mr. Brennan has over 20 years experience in manufacturing operations with both start up and mature companies. Prior to joining Rypos in 2007, he served as Vice President of Manufacturing for Phyflex Networks, Inc, a start up company, manufacturing Carrier Ethernet products; Vice President of Operations for Netsilicon, a Digi International company manufacturing Device Networking products; and senior management roles with consumer electronic companies manufacturing digital cameras, radar detectors, and other electronic products. He holds a BS in Business Administration from Merrimack College and his MBA from Boston University.

Evan Ypsilantis, **Vice President, Sales**
Mr. Ypsilantis has over 20 years of successful professional experience in several technology and electronic manufacturing sectors focused on sales and support to OEMs. He has held various senior management positions in business development, sales and technical marketing at Arrow Electronics, MediaLogic, Samsung Semiconductor, RedSwitch and Agilent Technologies Semiconductor Products Group. He has received his degree in Business Management and Economics from the University of Massachusetts at Boston, and has participated in graduate studies in Economics, Summa Cum Laude at Harvard University Faculty of Arts and Sciences.

David Dalke, Director of Engineering
Mr. Dalke is an experienced engineering manager with a strong history of developing and certifying high quality products for the electronics and medical device industries. Dave has recently joined the Rypos team after 10 years at MediSpectra where he held increasingly responsible roles, eventually becoming Director of Development. A graduate of Elizabethtown College with a degree in Chemistry, Dave also brings long experience in software development and control, having spent time at Perceptive Biosystems and Nova Biomedical early in his career.

Thomas Babineau, Director, Business Development
Mr. Babineau has 25 years experience in the management of Industrial Power Transmission companies. From 2003 – 2008 Mr. Babineau was co-Founder, President, and an Officer of Core Motion, Inc. a technology start-up focused on innovative electric motor/generator technology for wind power and industrial market applications. From 1997 through 2001 he was CEO and President of New Atlantic Partners, a contract manufacturing consultant firm for the mechanical power transmission industry. From 1984 through 1996 Mr. Babineau was employed with Zurn Industries in their Mechanical Power Transmission Divisions initially as a Product Manager and then as Vice President of Sales and Marketing.

Dr. Hans M. Wenghoefer, R&D Manager
Dr. Wenghoefer graduated from Brown University with a Ph.D. degree in Chemistry. He has over 30 years of national and international experience in the area of product / process development and commercialization of diversified products. He has held various research, development, and program management positions at DuPont Company, Michelin, Inc., Hercules, Inc., and Arthur D. Little.

Corporate Name, Address, Telephone Number, and Fax Number:

Current Address:

RYPOS, Inc.
150 Hopping Brook Road
Holliston, MA 01746

Telephone: (508) 429-4552
Facsimile: (508) 429-4553
Website: www.rypos.com

RYPOS

Active Regeneration Technology for Clean Diesel Power

RYPOS *Active*

Rypos Hybrid Diesel Particulate Filters (HDPF) are designed for voluntary compliance and increasingly stringent clean air regulations.

The Rypos Active Regeneration Technology is ideal for engines that run at low loads, idle for long periods and have low exhaust temperatures where the emission filters never get hot enough to regenerate on their own.

RYPOS Technology

The patented Rypos Active Regeneration Technology utilizes a porous sintered metal filter media that is both particulate filter and electrical heater. To regenerate the filter cartridges, a microprocessor measures backpressure and applies electrical current to heat the media and burn off accumulated soot. Automatic regeneration keeps the filter cartridges functioning at peak efficiency during normal operation.

Logical Choice

Rypos will help you specify the best filter system for your application or work with you to evaluate, select and install a diesel engine emission control system to meet your requirements.

The RYPOS Advantage

- Total particulate matter reduction up to 90% — CARB Level 3+ Verified
- Low back pressure maximizes engine performance
- Intelligent microprocessor control
- Sintered metal filter elements withstand heating cycles
- Low thermal mass responds quickly to heating
- Energy efficient — Less than 1% fuel penalty
- Modular and scalable design
- Active filter regeneration independent of exhaust temperature
- No increase in nitrogen gases — reduces NO_2
- Tolerates all fuel types, no additives required
- Low maintenance, durable, low cost of ownership

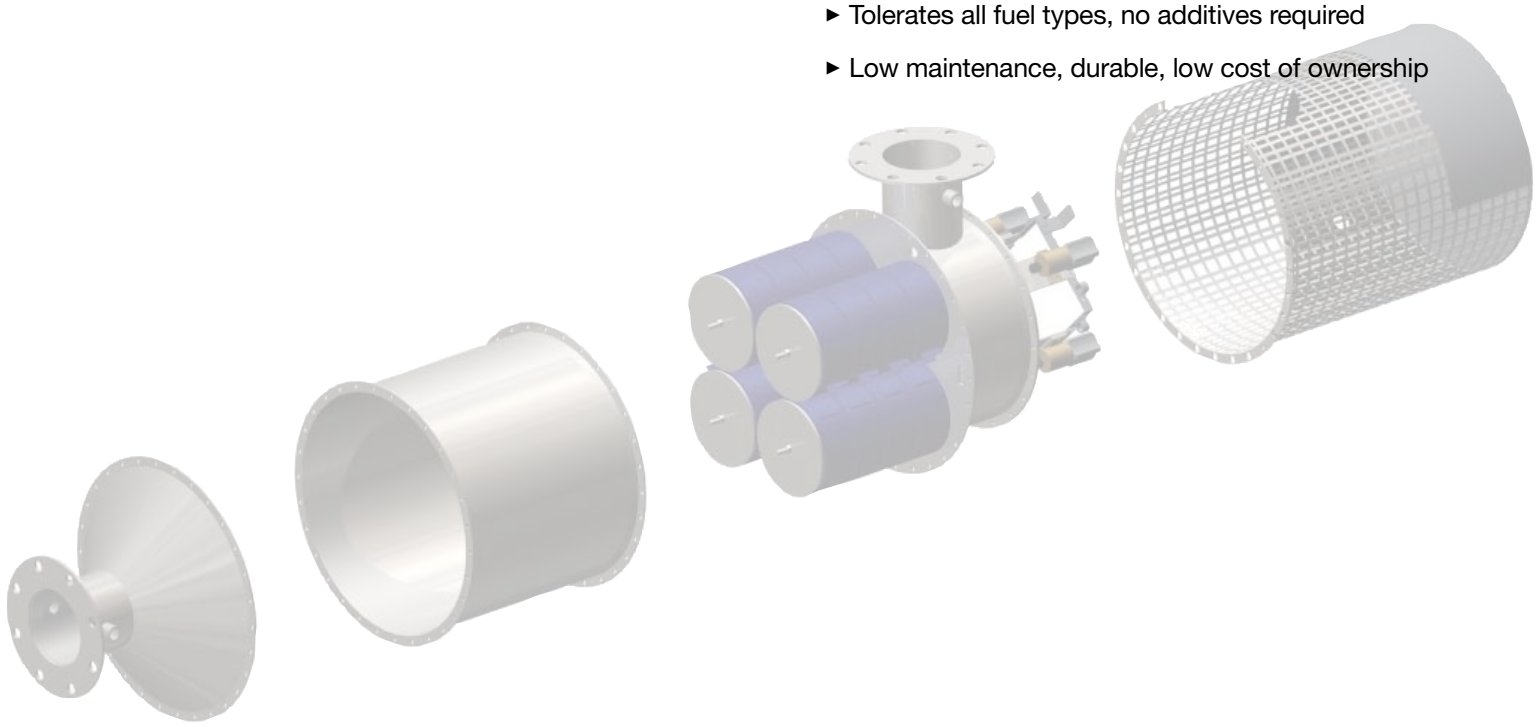

Regeneration Technology
The Logical Choice.

The Rypos HDPF/C™ is available for diesel engines that must meet Level 3+ emissions compliance: achieving total particulate matter reductions that exceed 85% and NO_2 emissions that do not exceed 20% (the HDPF/C reduces NO_2 up to 96%). The HDPF/C is used for diesel generator sets, pumps, mobile off-road construction equipment, and marine applications.

RH1207-L-C

RYPOS HDPF/C*	Engine Power	Approx. Exhaust Flow	Approx. Weight	Approx. Dimensions, inches (cm)		
	hp (kW)	cfm (m^3/hr)	pounds (kg)	Length	Width	Height
RH305-M-C	94.5 (75)	487 (828)	150 (68.0)	36 (91.4)	18.5 (47)	18.5 (47)
RH305-M-C	126 (95)	584 (993)	150 (68.0)	36 (91.4)	18.5 (47)	18.5 (47)
RH305-M-C	157.5 (120)	721 (1225)	150 (68.0)	36 (91.4)	18.5 (47)	18.5 (47)
RH404-M-C	216.7 (150)	1066 (1811)	250 (113.4)	57.5 (146.1)	20.5 (52.1)	20.5 (52.1)
RH404-M-C	229.7 (200)	1084 (1842)	250 (113.4)	57.5 (146.1)	20.5 (52.1)	20.5 (52.1)
RH405-L-C	398 (250)	2243 (3811)	250 (113.4)	57.5 (146.1)	20.5 (52.1)	20.5 (52.1)
RH405-L-C	480 (300)	2461 (4182)	250 (113.4)	57.5 (146.1)	20.5 (52.1)	20.5 (52.1)
RH408-L-C	563 (350)	3366 (5720)	350 (158.8)	75 (190.5)	30 (76.2)	30 (76.2)
RH408-L-C	636 (400)	3750 (6372)	350 (158.8)	75 (190.5)	30 (76.2)	30 (76.2)
RH408-L-C	707 (450)	4029 (6846)	350 (158.8)	75 (190.5)	30 (76.2)	30 (76.2)
RH408-L-C	779 (500)	3927 (6673)	350 (158.8)	75 (190.5)	30 (76.2)	30 (76.2)
RH706-L-C	856 (550)	4372 (7429)	400 (181.4)	84 (213.4)	40 (101.6)	40 (101.6)
RH706-L-C	840 (550)	4552 (7735)	400 (181.4)	84 (213.4)	40 (101.6)	40 (101.6)
RH706-L-C	900 (600)	4782 (8126)	400 (181.4)	84 (213.4)	40 (101.6)	40 (101.6)
RH706-L-C	998 (650)	4937 (8389)	400 (181.4)	84 (213.4)	40 (101.6)	40 (101.6)
RH707-L-C	1069 (700)	5283 (8977)	400 (181.4)	84 (213.4)	40 (101.6)	40 (101.6)
RH707-L-C	1141 (750)	5647 (9596)	400 (181.4)	84 (213.4)	40 (101.6)	40 (101.6)
RH707-L-C	1214 (800)	6046 (10274)	400 (181.4)	84 (213.4)	40 (101.6)	40 (101.6)
RH1206-L-C	1357 (900)	7593 (12902)	1200 (544.3)	66 (167.6)	48 (121.9)	48 (121.9)
RH1207-L-C	1502 (1000)	8207 (13946)	1200 (544.3)	66 (167.6)	48 (121.9)	48 (121.9)
RH1208-2EPS-L-C	2000 (1500)	11060 (18794)	1200 (544.3)	66 (167.6)	48 (121.9)	48 (121.9)
RH1908-2EPS-L-C	3350 (2500)	15136 (25720)	1600 (725.7)	89 (226.1)	72 (182.9)	72 (182.9)

*Please consult with a RYPOS representative to confirm accurate filter sizing, other variables may effect overall sizing specification

The RYPOS HDPF can be used alone or in conjunction with a diesel oxidation catalyst to reduce the soluble organic fraction, gaseous hydrocarbons, and carbon monoxide. As an active regeneration system, the RYPOS HDPF is regenerated independently of the exhaust temperature. Each element, which represents a small fraction of the total filter area, is heated individually to reduce the maximum amount of electrical energy required. The average power consumption is less than one percent of the rated power of the engine.

RH1208-L-C

RH1908-L-C

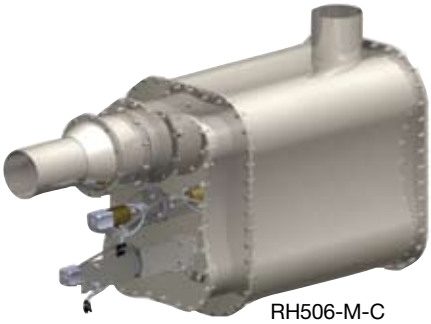

RH506-M-C

R202-S

RH707-L-C

R201-S

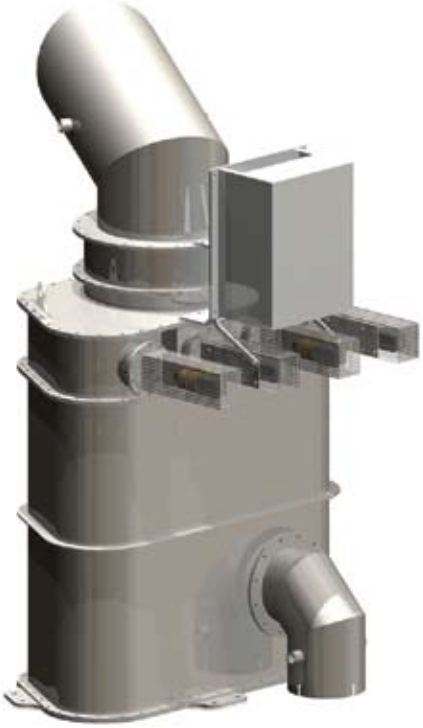

RH707-M-C

The RYPOS Mission

To provide reliable, compliant, cost effective exhaust filtration solutions that delight our customers.

RYPOS Benefits

- Designed to meet stringent clean diesel standards
- Greater reliability and low back-pressure
- In tune with Federal clean air incentives
- Ideal for backup diesel generators
- Suitable for peak load shaving

Engines

- Up to 3000 hp diesel engines
- Two and four cycle engines
- Old and new engines
- Turbo charged and naturally aspirated

Industrial Applications

- Diesel Generators
  - Standby power
  - Prime power
  - Peak load shaving
  - Aircraft ground power
- Pumps
  - Oil field operations
  - Irrigation
- Marine transport
- Mining
- Rail
- Off-Road Equipment
- Truck APU
- Truck TRU

Active Regeneration Technology – The Logical Solution for Clean Diesel Power.

RYPOS

Rypos, Inc.
260 Hopping Brook Road
Holliston, MA 01746-1455
USA

Tel. 508-429-4552
Fax 508-429-4553

www.rypos.com

HDPF and HDPF/C are trademarks of RYPOS, Inc.
Copyright© RYPOS Inc. 2008
Printed in USA

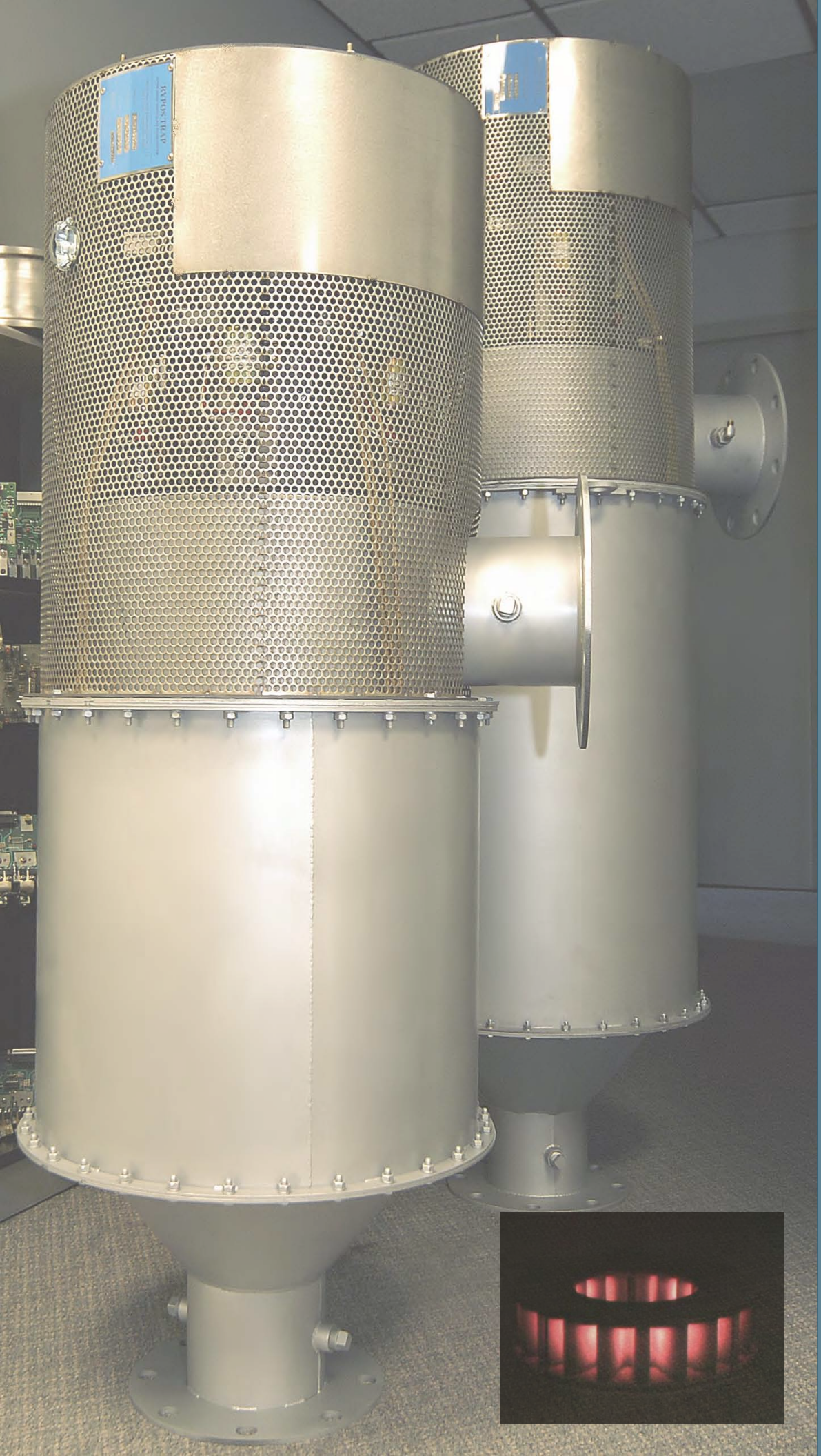

RYPOS

www.RYPOS.com

Active Diesel Emission Control Systems

The Logical Solution

The Logical Solution
CARB Tier 3+ Verified

RYPOS
Active Diesel Emission Control Systems

The patented Rypos Active Regeneration Technology utilizes a porous sintered metal filter media that is both particulate filter and electrical heater. To regenerate the filter cartridges, a microprocessor measures back pressure and applies electrical current to heat the media and burn off accumulated soot. Automatic regeneration keeps the filter cartridges functioning at low back pressure and peak efficiency.

RYPOS HDPF Series diesel particulate filters can be used alone or in conjunction with a diesel oxidation catalyst to reduce the soluble organic fraction, gaseous hydrocarbons, and carbon monoxide. As an active regeneration system, the RYPOS HDPF is regenerated independently of the exhaust temperature. Each element, which represents a small fraction of the total filter area, is heated individually to reduce the maximum amount of electrical energy required. The average power consumption is less than one percent of the rated power of the engine.

RYPOS HDPF/C	Max Engine Power	Max Exhaust Flow	
Series	kw	Cfm	m^3/hr
400	500	3,810	6,474
800	900	7,630	12,965
1200	1500	10,100	17,162
1900	3100	24,500	41,631

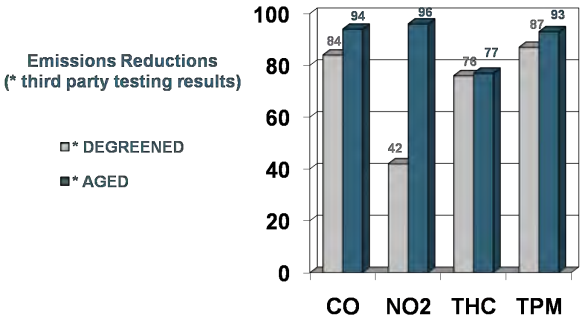

The RYPOS Advantage

- Active filter regeneration independent of exhaust temperatures
- Low maintenance, durable, lowest cost of ownership
- Low back pressure maximizes engine performance
- Total particulate matter reduction up to 90%
- Reduces hydrocarbons, carbon monoxide, and NO_2
- Energy efficient, less than 1% fuel penalty
- CARB Level 3+ Verified

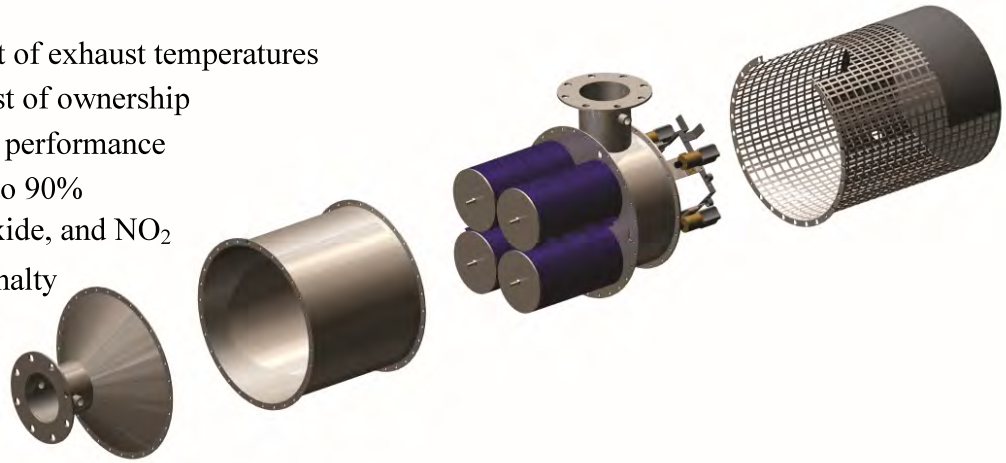

RYPOS

Rypos, Inc.
150 Hopping Brook Road
Holliston, MA 01746
USA

Tel. 508.429.4552
Fax 508.429.4553

www.rypos.com