United States
Environmental Protection
Agency

Office of Air Quality
Planning and Standards
Research Triangle Park NC 27711

EPA-450/3-78-119
December 1978

Air

Volatile Organic Compound (VOC) Species Data Manual

For EPA-450/3-78-119,

Volatile Organic Compound (VOC) Species Data Manual

PLEASE NOTE

In the production process, this volume underwent changes that make the text inconsistent with its index. What is Chapter 6 in the text is referred to in the index as Chapter 9. Properly, Chapter 6 should be changed to Chapter 9, because chapter numbers should reflect Source Classification Code (SCC) categories. Pages 6-01-1 through 6-49-10 should be changed to 9-01-1 through 9-49-10. Profile table numbers and SCC numbers in this chapter should also be changed, with the initial number of each being 9, not 6.

It should be noted that SCCs beginning with 9 were artifically derived as a miscellaneous category associated with this project and are not associated with the National Emissions Data System (NEDS).

EPA-450/3-78-119

Volatile Organic Compound (VOC) Species Data Manual

by

Harry W. Bucon, Joseph F. Macko, Harold J. Taback

KVB Engineering, Inc.
17332 Irvine Blvd.
Tustin, California 92680

Contract No. 68-02-3029

EPA Project Officer: Frank M. Noonan

Prepared for

U.S. ENVIRONMENTAL PROTECTION AGENCY
Office of Air, Noise, and Radiation
Office of Air Quality Planning and Standards
Research Triangle Park, North Carolina 27711
December 1978

This report is issued by the U. S. Environmental Protection Agency to report technical data of interest to a limited number of readers. Copies are available free of charge to Federal employees, current contractors and grantees, and nonprofit organizations- in limited quantities - from the Library Services Office (MD-35), Research Triangle Park, North Carolina 27711; or, for a fee, from the National Technical Information Service, 5285 Port Royal Road, Springfield, Virginia 22161.

This report was furnished to the Environmental Protection Agency by KVB Engineering, Inc., 17332 Irvine Blvd., Tustin, CA 92680, in fulfillment of Contract No. 68-02-3029. The contents of this report are reproduced herein as received from KVB Engineering, Inc. The opinions, findings and conclusions expressed are those of the author and not necessarily those of the Environmental Protection Agency. Mention of company or product names is not to be considered an endorsement by the Environmental Protection Agency.

Publication No. EPA-450/3-78-119

ACKNOWLEDGEMENTS

KVB acknowledges the participation of the following members of their staff:

H. J. Taback	Program Manager
H. W. Bucon	Project Engineer
J. Macko	Project Staff
T. W. Sonnichsen	Project Staff
M. J. Berlant	Final Editor
J. M. Breuer	Clerical

KVB also acknowledges the participation of their subcontractor Abacus Programming Corporation, Santa Monica, California and the following members of their staff:

J. L. Stredler	Systems Analyst
Z. Kulick	Data Processing

CONTENTS

Section	Page
ABSTRACT	ii
ACKNOWLEDGEMENTS	iii
INTRODUCTION	1
SUMMARY	2
PROFILE TABLE SUMMARY INDEX	1
SCC SUMMARY INDEX	14
PROFILE ALPHABETICAL INDEX	35
PROCESS DESCRIPTIONS/PROFILES	1.01-1
REFERENCE DATA	Appendix I
Chemical File by SAROAD Code	I-A
Chemical File by Chemical Classification	I-B
Organic Species by Sources	I-C
NEDS Source Classification Codes	I-D
Area Source Categories	I-E
Boiling Point Range Compounds	I-F
EMISSION PROFILE DEVELOPMENT	APPENDIX II
SAMPLE PROFILE CALCULATION DEVELOPMENT	APPENDIX III

VOLATILE ORGANIC COMPOUND (VOC) SPECIES DATA MANUAL

INTRODUCTION

The purpose of this study was to prepare a manual that (1) summarizes the available species information on Volatile Organic Compounds (VOC) from stationary and mobile sources in a format useful to the air pollution control community in general, and especially those preparing emission inventories for photochemical models, and (2) provides documentation on the derivation of each of the specie profile tables included herein.

KVB has reviewed the VOC species material prepared for the California Air Resources Board (CARB), as well as mobile source data from reports supplied by the EPA in order to tabulate and reference these data. A data table format has been developed that depicts the species data for each source in a manner to facilitate the allocation of all VOC's into reactivity classes as required by various photochemical models. This table also includes the following information for each VOC identified: SAROAD code, chemical name and classification, molecular weight, and percent concentration by weight and volume.

SUMMARY

MANUAL ORGANIZATION AND SUMMARY INDEX

This manual contains approximately 175 unique VOC emission profiles for controlled and uncontrolled point and area stationary sources. Also included are profiles for mobile sources (a composite for gasoline, one for diesel fuel and another composite profile based on gasoline and diesel fueled vehicles).

The 175 profiles for stationary and area sources have been organized using the National Emission Data System (NEDS) Source Classification Codes (SCC) category numbering system and descriptive headings as listed in Volume V of the Aeros Manual, and as also contained in Appendix C of AP-42, as well as Appendix I of this manual. Where more than one SCC could be assigned to a specific profile, the lowest applicable SCC was used rather than duplicate the profile for each applicable SCC.

A profile table/summary index has been developed that includes the following information:

a) SCC Category Section Numbers
b) Descriptive Titles
c) KVB Profile Key Numbers
d) Table Numbers
e) Page Numbers for Sections and Profiles
f) AP-42 Section References
g) Applicable SCC Numbers for each Profile

For convenience to the user, this summary index has also been organized separately into the following:

a) Alphabetically by Profile Title
b) Numerically by Applicable SCC Number

Report Format Summary

Each emission profile or series of related profiles is preceded by a brief description for proper utilization of the profile(s). The documentation of these profiles is in the form of a mini-report for each SCC category for which profiles were available. These mini-reports are similar to the sections found in AP-42 and each report has been organized as follows:

a) Process Description--A brief description of the process involved but enough information to include limits and applications.
b) Emissions--Reference to the applicable section in AP-42, or inclusion of emission data and factors when they were known.
c) Controls or Process Modification--A brief description of control equipment or process modification and their effect on the profile.
d) Profile Basis--An explanation of how the profile was developed; how many and what kind of tests, questionnaire data, literature data, engineering judgement, assumptions, etc.
e) Data Qualification--A description of any limitations or restrictions on profile use.
f) References--Careful documentation of reports, published data and names and titles of personal contacts.

Items a) through e) above precede the profiles in the mini-report. Item f) "references" will be found after the profiles for each category or, in some cases, at the end of a series of similar categories.

Data Table Format Summary

Data tables have been developed that summarize the most important emission profile data for each source category. The data table format has been organized to present the data so that they can be readily utilized by the air pollution control community in general as well as the photochemical modeler. Each data table contains the following information:

1. General Information
   a) Date
   b) Table number
   c) Descriptive title
   d) Data confidence level

e) Control device information
f) Process modification when appropriate
g) Method of obtaining profile data
h) References used to develop profile data
i) Applicable SCC categories

2. Specific Information for Each Species

a) SAROAD code
b) Chemical name
c) Molecular weight
d) Percent concentration by weight
e) Percent concentration by volume
f) Chemical classification

3. Specific Information for Each Chemical Classification

a) Number of compounds in each classification
b) Average molecular weight for each classification
c) Average weight percent for each classification
d) Average volume percent for each classification
e) Average molecular weight of composite compound

Chemical Classification Summary

The chemical classification for each specie listed in the profile data tables has been categorized according to recommendations by John E. Summerhays of the EPA's Source Receptor Analysis Branch, at Research Triangle Park. The chemical classification for each species is as follows:

1) Paraffin
2) Olefin
3) Aromatic
4) Carbonyl (aldehydes and ketones)
5) Miscellaneous such as:

Esters	Acetylene	Nitriles
Alcohols	Amines	Etc.
Ethers	Amides	
Acids		

6) Methane
7) Non-reactive other than methane
(Reference Federal Register July 8, 1977)

Ethane
Trichloromethane (chloroform)
Trichlorotrifluoroethane (Freon 113)
Carbon Tetrachloride
Diethylene dibromide

Acetonitrile
Methyl chloride
1,1,1-trichloroethane (methyl chloroform)
1,1,2-trichloroethane
Ethylene dichloride
Benzene

Data Confidence Level Summary

Data confidence levels for each profile table have been expressed using Roman Numerals I through V as follows:

I. High Degree of Confidence--
Based on a composite of many tests so that the data are highly representative of the population.

II. Above Average Confidence--
Based on a moderate number of tests or questionnaires which indicate that the data are reasonably representative of the population.

III. Average Confidence--
Based on data which seems reasonable and should be more or less representative of the population.

IV. Below Average Confidence--
Based on a little data but not sufficient enough to necessarily be representative of the population.

V. Low Degree of Confidence--
Results are highly judgemental and could vary significantly from source to source.

Appendices

There are three appendices at the end of this manual which the user may wish to refer to. Appendix I is a reference data section that contains the following useful information:

A) Chemical File Sorted by SAROAD Code
B) Chemical File Sorted by Chemical Classification
C) Organic Species by Sources
D) NEDS Source Classification Codes
E) Area Source Categories
F) Boiling Point Range Compounds

Appendix II is also a reference section but which describes emission profile development by means of field tests, industry questionnaires and literature data.

Appendix III describes by stepwise calculations how emission profiles were developed for volume percents and average molecular weights from weight percent data.

PROFILE TABLE SUMMARY INDEX

PROFILE TABLE SUMMARY INDEX

Section No.	Title	Profile Key No.	Table No.	Page No.	AP-42 Section	Applicable SCC
1-01	EXTERNAL COMBUSTION BOILERS			1.01-1		
	RESIDUAL OIL	0001	1-01-004	1.01-3	1.3	1-01-004-01, -02, -03 1-02-004-01, -02, -03 1-03-004-02, -03 1-05-001-04 1-05-002-04 3-90-004-01, -02, -03, -05, -99 3-90-999-98
	DISTILLATE OIL	0002	1-01-005	1.01-4	1.3	1-01-005-01, -02, -03 1-02-005-01, -02, -03 1-03-005-01, -02, -03 1-05-001-05 1-05-002-05 3-90-005-01, -02, -03, -04 3-90-005-05, -07, -08, -09, -99
	NATURAL GAS	0003	1-01-006	1.01-5	1.4	1-01-006-01, -02, -03 1-01-997-99 1-01-999-97 1-02-006-01, -02, -03 1-02-010-02 1-02-999-97 1-03-006-01, -02, -03 1-03-010-03 1-03-997-99 1-03-999-97 1-05-001-06 1-05-002-06 3-02-007-99 3-02-008-99 3-02-009-02 3-02-012-01, -03, -99 3-97-020-99 3-90-006-01, -02, -03, -05, -06 3-90-006-07, -08, -09, -31, -99 3-90-007-99 3-90-010-99 3-90-999-97, -99
	REFINERY GAS	0004	1-01-007	1.01-6	N/A	1-01-007-01, -02 1-02-007-01, -02, -03
	COKE OVEN GAS	0005	1-02-008	1.01-7	N/A	1-02-008-02 3-90-007-02 3-90-008-01, -99

26200-795

PROFILE TABLE SUMMARY INDEX (CONTINUED)

Section No.	Title	Profile Key No.	Table No.	Page No.	AP-42 Section	Applicable SCC
2-01	INTERNAL COMBUSTION ENGINE			2.01-1		
	NATURAL GAS TURBINE	0007	2-01-002	2.01-3	3.3	2-01-002-01, 2-02-002-01
	DIESEL FUEL, RECIPROCATING	0008	2-01-003	2.01-4	3.3	2-01-003-01, 2-02-004-01
	DISTILLATE OIL, RECIPROCATING	0009	2-02-001	2.01-5	3.3	2-02-001-02
	NATURAL GAS, RECIPROCATING	0010	2-02-002 A	2.01-6	3.3	2-02-002-02
	NATURAL GAS, 30 HP RECIP.	0308	2-02-002 B	2.01-7	3.3	2-02-002-02
3-01	INDUSTRIAL PROCESS, CHEMICAL MFG.			3.01-1		
	VARNISH MFG--BODYING OIL	0066	3-01-015	3.01-3	5.10	3-01-015-01
	PLASTICS, PVC-GENERAL	0067	3-01-018 A	3.01-7	5.13	3-01-018-01
	PLASTICS, POLYPROPYLENE-GENERAL	0068	3-01-018 B	3.01-8	5.13	3-01-018-02
	PHTHALIC ANHYDRIDE-WASTE SUMP	0071	3-01-019 A	3.01-12	5.12	3-01-019-03
	PHTHALIC ANHYDRIDE-CONTROLLED	0276	3-01-019 B	3.01-13	5.12	3-01-019-03
	PRINTING INK COOKING, GENERAL	0072	3-01-020	3.01-17	5.14	3-01-020-01, -99
	AUTOMOTIVE TIRES, TUBER ADHESIVE	0272	3-01-026 A	3.01-21	N/A	3-01-026-20
	AUTO TIRES, TUBER ADHESIVE, WHITE SIDEWALL	0273	3-01-026 B	3.01-22	N/A	
	SYNTHETIC RUBBER, AUTO TIRE PRODUCTION	0274	3-01-026 C	3.01-23	N/A	3-01-026-20
	ETHYLENE DICHLORIDE, DIRECT CHLORINATION	0078	3-01-125	3.01-28	N/A	3-01-125-02, -99
	OTHER, FLARES	0079	3-01-999	3.01-32	N/A	3-01-999-99

PROFILE TABLE SUMMARY INDEX (CONTINUED)

Section No.	Title	Profile Key No.	Table No.	Page No.	AP-42 Section	Applicable SCC
3-02	INDUSTRIAL PROCESS, FOOD/AGRICULTURE			3.02-1		
	FERMENTATION-BEER	0211	3-02-009	3.02-3	6.5	3-02-009-03
3-03	INDUSTRIAL PROCESS, PRIMARY METALS			3.03-1		
	METALLURGICAL COKE MFG., BY-PRODUCT PROCESS, COKE OVEN STACK GAS	0011	3-03-003	3.03-4	7.2	3-03-003-01, -02, -03 3-03-003-04, -05, -06
	IRON PRODUCTION, BLAST FURNACE ORE CHARGING & AGGLOMERATE CHARGING	0012	3-03-006 A	3.03-8	7.5	3-03-008-01, -02
	IRON SINTERING	0013	3-03-008 B	3.03-9	7.5	3-03-008-03
	STEEL PRODUCTION, OPEN HEARTH WITH OXYGEN LANCE	0306	3-03-009 A	3.03-13	7.5	3-03-009-01
	STEEL PRODUCTION, OPEN HEARTH WITH OXYGEN LANCE-CONTROLLED	0014	3-03-009 B	3.03-14	7.5	3-03-009-01
	STEEL PRODUCTION, BASIC OXYGEN FURNACE	0016	3-03-009 C	3.03-15	7.5	3-03-009-03
3-05	INDUSTRIAL PROCESS, MINERAL PRODUCTS			3.05-1		
	ASPHALT ROOFING, BLOWING OPERATION	0021	3-05-001 A	3.05-4	8.2	3-05-001-01
	ASPHALT ROOFING, DIPPING	0022	3-05-001 B	3.05-5	8.2	3-05-001-02, -04
	ASPHALT ROOFING, SPRAYING	0023	3-05-001 C	3.05-6	8.2	3-05-001-03
	ASPHALT ROOFING, TAR KETTLE	0024	3-05-001 D	3.05-7	N/A	3-05-001-99
	ASPHALT CONCRETE, ROTARY DRYER NATURAL GAS FIRED	0025	3-05-002 A	3.05-11	8.1	3-05-002-01
	ASPHALT CONCRETE, IN-PLACE ROAD ASPHALT	0026	3-05-002 B	3.05-12	8.1	3-05-002-02

26200-795

PROFILE TABLE SUMMARY INDEX (CONTINUED)

Section No.	Title	Profile Key No.	Table No.	Page No.	AP-42 Section	Applicable SCG
3-06	INDUSTRIAL PROCESS, PETROLEUM INDUSTRY			3.06-1		
	REFINERY, FCC, CO BOILER	0029	3-06-002	3.06-4	9.1	3-06-002-01
	REFINERY, FUGITIVE EMISSIONS, DRAINAGE/SEPARATION PITS, COVERED, CRUDE OIL & GAS	0031	3-06-005	3.06-7	9.1	3-06-005-01
	REFINERY FUGITIVE EMISSIONS COOLING TOWERS	0035	3-06-007	3.06-10	9.1	3-06-007-01
	REFINERY MISCELLANEOUS, PIPE/VALVE FLANGES, COMPOSITE	0316	3-06-008 A	3.06-13	9.1	3-06-008-01
	REFINERY MISCELLANEOUS, PIPE/VALVE FLANGES, GASOLINE	0317	3-06-008 B	3.06-14	9.1	3-06-008-01
	REFINERY MISCELLANEOUS, PIPE/VALVE FLANGES, CRACKED GASOLINE	0319	3-06-008 C	3.06-15	9.1	3-06-008-01
	REFINERY MISCELLANEOUS, PIPE/VALVE FLANGES, GAS-OIL STOCK	0322	3-06-008 D	3.06-16	9.1	3-06-008-01
	REFINERY MISCELLANEOUS, PIPE/VALVE FLANGES, REFORMATE STOCK	0309	3-06-008 E	3.06-17	9.1	3-06-008-01
	REFINERY MISCELLANEOUS, PIPE/VALVE FLANGES, DISTILLATE	0318	3-06-008 F	3.06-18	9.1	3-06-008-01
	REFINERY MISCELLANEOUS, PIPE/VALVE FLANGES, NAPHTHA	0320	3-06-008 G	3.06-19	9.1	3-06-008-01
	REFINERY MISCELLANEOUS, PIPE/VALVE REFINERY GAS	0324	3-06-008 H	3.06-20	9.1	3-06-008-01
	REFINERY MISCELLANEOUS, PIPE/VALVE FLANGES, NATURAL GAS	0323	3-06-008 J	3.06-21	9.1	3-06-008-01
	REFINERY MISCELLANEOUS, VALVES & FLANGES, WET & DRY NATURAL GAS	0041	3-06-008 K	3.06-22	9.1	3-06-008-01
	REFINERY MISCELLANEOUS, VALVES & FLANGES, GAS PLANT	0036	3-06-008 L	3.06-23	9.1	3-06-008-01
	MISCELLANEOUS, WET GAS VALVE FROM TRAPS, WET NATURAL GAS, COMPOSITE	0042	3-06-008 M	3.06-24	9.1	3-06-008-01
	MARKETING, FUGITIVE EMISSIONS, RELIEF VALVES, LIQUIFIED PETROLEUM GAS	0047	3-06-008 N	3.06-25	9.1	3-06-008-02

PROFILE TABLE SUMMARY INDEX (CONTINUED)

Section No.	Title	Profile Key No.	Table No.	Page No.	AP-42 Section	Applicable SCC
3-06	INDUSTRIAL PROCESS, PETROLEUM INDUSTRY (CONTINUED)					
	REFINERY MISCELLANEOUS, PUMP SEALS, COMPOSITE	0321	3-06-008 P	3.06-28	9.1	3-06-008-03
	REFINERY MISCELLANEOUS, PUMP SEALS, STRAIGHT RUN GASOLINE	0312	3-06-008 Q	3.06-29	9.1	3-06-008-03
	REFINERY MISCELLANEOUS, PUMP SEALS, CRACKED GASOLINE	0310	3-06-008 R	3.06-30	9.1	3-06-008-03
	REFINERY MISCELLANEOUS, PUMP SEALS, GAS-OIL STOCK	0313	3-06-008 S	3.06-31	9.1	3-06-008-03
	REFINERY MISCELLANEOUS, PUMP SEALS, REFORMATE STOCK	0314	3-06-008 T	3.06-32	9.1	3-06-008-03
	REFINERY MISCELLANEOUS, PUMP SEALS, DISTILLATE	0311	3-06-008 U	3.06-33	9.1	3-06-008-03
	REFINERY MISCELLANEOUS, PUMP SEALS, NAPHTHA	0315	3-06-008 V	3.06-34	9.1	3-06-008-03
	MISCELLANEOUS, PUMP SEALS, NATURAL GASOLINE	0043	3-06-008 W	3.06-35	9.1	3-06-008-03
	MISCELLANEOUS, PUMP SEALS, GASOLINE	0038	3-06-008 X	3.06-36	9.1	3-06-008-03
	MISCELLANEOUS, COMPRESSOR SEALS, WET AND DRY NATURAL GAS	0044	3-06-008 Y	3.06-37	9.1	3-06-008-04
	MISCELLANEOUS, COMPRESSOR SEALS, REFINERY GAS	0039	3-06-008 Z	3.06-38	9.1	3-06-008-04
	REFINERY FLARES, NATURAL GAS	0051	3-06-009	3.06-41	9.1	3-06-009-01
	REFINERY, CATALYTIC REFORMER, GENERAL FUGITIVE EMISSIONS	0053	3-06-013	3.06-43	9.1	3-06-013-01

26200-795

PROFILE TABLE SUMMARY INDEX (CONTINUED)

Section No.	Title	Profile Key No.	Table No.	Page No.	AP-42 Section	Applicable SCC
3-30	INDUSTRIAL PROCESS, TEXTILE MANUFACTURING			3.30-1		
	FABRIC DYEING, GENERAL	0060	3-30-001	3.30-2	N/A	3-30-001-99
3-90	INDUSTRIAL PROCESS, IN PROCESS FUEL			3.90-1		
	PROCESS GAS, COKE OVEN BLAST FURNACE GAS	0217	3-90-007	3.90-3	N/A	3-90-007-01
4-01	POINT SOURCE EVAPORATION, CLEANING SOLVENT			4.01-1		
	DRY CLEANING, 1, 1, 1-TRICHLOROETHANE	0087	4-01-001 A	4.01-4	4.1	4-01-001-99 4-01-002-02
	DRY CLEANING, STODDARD SOLVENT	0086	4-01-001 B	4.01-5	4.1	4-01-001-02 4-01-002-01
	DRY CLEANING, PERCHLOROETHYLENE	0085	4-01-001 C	4.01-6	4.1	4-01-001-01 4-01-002-03
	DEGREASING, TRICHLOROETHANE	0088	4-01-002 A	4.01-10	N/A	4-01-002-02
	DEGREASING, DICHLOROMETHANE	0275	4-01-002 B	4.01-11	N/A	4-01-002-04
	DEGREASING, TRICHLOROETHYLENE	0271	4-01-002 C	4.01-12	N/A	4-01-002-05
	DEGREASING, TOLUENE	0090	4-01-002 D	4.01-13	N/A	4-01-002-06
	DEGREASING, TRICHLOROFLUOROMETHANE	0088	4-01-002 E	4.01-14	N/A	4-01-002-99
	DEGREASING, TRICHLOROTRIFLUOROETHANE (FREON 113)	0277	4-01-002 F	4.01-15	N/A	4-01-002-99
4-02	POINT SOURCE EVAPORATION, SURFACE COATING			4.02-1		
	PAINT, POLYMERIC (HOT AIR DRIED)	0125	4-02-001 A	4.02-5	4.2	4-02-001-01
	PAINT SOLVENT, ACETONE	0219	4-02-001 B	4.02-6	4.2	4-02-001-02 4-02-003-02 4-02-004-02 4-02-009-02
	PAINT SOLVENT, ETHYL ACETATE	0220	4-02-001 C	4.02-7	4.2	4-02-001-03 4-02-003-03 4-02-004-03
	PAINT SOLVENT, METHYL ETHYL KETONE	0221	4-02-001 D	4.02-8	4.2	4-02-001-04 4-02-005-03 4-02-007-02 4-02-009-18
	VARNISH/SHELLAC, GENERAL	0127	4-02-003 A	4.02-9	4.2	4-02-003-01

PROFILE TABLE SUMMARY INDEX (CONTINUED)

Section No.	Title	Profile Key No.	Table No.	Page No.	AP-42 Section	Applicable SCC
4-02	POINT SOURCE EVAPORATION, SURFACE COATING (CONTINUED)					
	VARNISH/SHELLAC, VARNISH RESIN	0132	4-02-003 B	4.02-10	4.2	4-02-003-01
	VARNISH/SHELLAC, LXH-221, AIR CONVERTING VARNISH	0278	4-02-003 C	4.02-11	4.2	4-02-003-01
	COMPOSITE, VARNISH/SHELLAC, A. BROWN CO., BROLITE, MIL-V-173B, TT-V-109B	0133	4-02-003 D	4.02-12	4.2	4-02-003-01
	VARNISH/SHELLAC, XYLENE	0223	4-02-003 E	4.02-13	4.2	4-02-003-05 4-02-009-24
	LACQUER, PAPERBOARD PRODUCTS AND CONTAINERS	0149	4-02-004 A	4.02-14	4.2	4-02-004-01, -99
	LACQUER, METAL FURNITURE	0148	4-02-004 B	4.02-15	4.2	4-02-004-01, -99
	LACQUER, LXB-472-E SEMIGLOSS TOP COAT	0147	4-02-004 C	4.02-16	4.2	4-02-004-01, -99
	LACQUER, AIRCRAFT COATING	0155	4-02-004 D	4.02-17	4.2	4-02-004-01, -99
	LACQUER, AIRCRAFT PARTS	0146	4-02-004 E	4.02-18	4.2	4-02-004-01 4-02-006-99
	LACQUER, PLASTIC COATING	0150	4-02-004 F	4.02-19	4.2	4-02-004-01, -99
	ENAMEL, GENERAL COMPOSITE	0156	4-02-005 A	4.02-20	4.2	4-02-005-01, -99
	ENAMEL, POLYESTER, MODIFIED ACRYLIC	0159	4-02-005 B	4.02-21	4.2	4-02-005-01, -99
	ENAMEL, COMPOSITE FOR WOOD FURNITURE	0157	4-02-005 C	4.02-22	4.2	4-02-005-01, -99
	ENAMEL, AIRCRAFT INDUSTRY	0164	4-02-005 D	4.02-23	4.2	4-02-005-01, -99
	ENAMEL, CELLOSOLVE ACETATE	0222	4-02-005 E	4.02-24	4.2	4-02-005-02 4-02-009-07
	PRIMER, GENERAL	0134	4-02-006 A	4.02-25	4.2	4-02-006-01, -99
	PRIMER, PAPERBOARD PRODUCTS & CONTAINERS	0137	4-02-006 B	4.02-26	4.2	4-02-006-01
	PRIMER, METAL FURNITURE	0136	4-02-006 C	4.02-27	4.2	4-02-006-01

PROFILE TABLE SUMMARY INDEX (CONTINUED)

Section No.	Title	Profile Key No.	Table No.	Page No.	AP-42 Section	Applicable SCC
4-02	POINT SOURCE EVAPORATION, SURFACE COATING (CONTINUED)					
	PRIMER, RED OXIDE SHOP COAT, KOPPERS P-470-A-66	0331	4-02-006 D	4.02-28	4.2	4-02-006-01
	PRIMER, WATER BASED AUTOMOTIVE PAINT SPRAY BOOTH	0280	4-02-006 E	4.02-29	4.2	4-02-006-01
	PRIMER, BLACK KOPPERS A-1131-66	0281	4-02-006 F	4.02-30	4.2	4-02-006-01
	PRIMER NAPHTHA	0282	4-02-006 G	4.02-31	4.2	4-02-006-02 4-02-007-05 4-02-009-21 4-05-003-07
	PRIMER, MINERAL SPIRITS	0283	4-02-006 H	4.02-32	4.2	4-02-006-04 4-02-009-20 4-05-002-03 4-05-004-02 4-05-005-08
	PRIMER, MINERAL SPIRITS, SPECIATION	0225	4-02-006 J	4.02-33	4.2	4-02-006-04
	PRIMER, SHELL M-75	0284	4-02-006 K	4.02-34	N/A	4-02-006-99
	ADHESIVES, LABEL	0141	4-02-007 A	4.02-35	N/A	4-02-007-01
	ADHESIVE, METAL FURNITURE	0142	4-02-007 B	4.02-36	N/A	4-02-007-01
	ADHESIVE, AUTOMOTIVE VINYL TOP SPRAY BOOTH	0285	4-02-007 C	4.02-37	N/A	4-02-007-01
	ADHESIVES, FOSTER BOND SEAL NO. 107	0145	4-02-007 D	4.02-38	N/A	4-02-007-01, -99
	ADHESIVE, BENZENE	0287	4-02-007 E	4.02-39	N/A	4-02-007-04
	CITRUS COATING WAX, BROGDEX 502	0293	4-02-999 A	4.02-40	N/A	4-02-999-99
	CITRUS COATING WAX, FLAVORSEAL 320-1820	0294	4-02-999 B	4.02-41	N/A	4-02-999-99
	CITRUS COATING WAX, FLAVORSEAL 115-1800	0295	4-02-999 C	4.02-42	N/A	4-02-999-99
	COATING OVEN, METAL PARTS, GENERAL	0092	4-02-008 A	4.02-47	N/A	4-02-008-01
	COATING OVEN, WATER BASED AUTOMOTIVE PRIMER, NATURAL GAS FIRED	0279	4-02-008 B	4.02-48	N/A	4-02-008-03
	COATING OVEN, ZINC CHROMATE INFRARED DRYER	0056	4-02-008 C	4.02-49	N/A	4-02-008-99

PROFILE TABLE SUMMARY INDEX (CONTINUED)

Section No.	Title	Profile Key No.	Table No.	Page No.	AP-42 Section	Applicable SCC
4-02	POINT SOURCE EVAPORATION, SURFACE COATING (CONTINUED)					
	COATING OVEN, ADHESIVE, AUTOMOBILE VINYL TOP, NATURAL GAS FIRED	0286	4-02-008D	4.02-50	N/A	4-02-007-01
	COATING OVEN, ENAMEL GENERAL	0162	4-02-008E	4.02-51	4.2	4-02-005-01, -99
	COATING OVEN, LACQUER AUTOMOTIVE	0154	4-02-008F	4.02-52	4.2	4-02-004-01, -99
	SOLVENT, GENERAL	0096	4-02-009 A	4.02-56	N/A	4-02-009-01
	SOLVENT, BUTYL ACETATE	0288	4-02-009 B	4.02-57	N/A	4-02-009-03
	SOLVENT, BUTYL ALCOHOL	0289	4-02-009 C	4.02-58	N/A	4-02-009-04
	SOLVENT, CELLOSOLVE	0290	4-02-009 D	4.02-59	N/A	4-02-009-06 4-05-003-03
	SOLVENT, DIMETHYL FORMAMIDE	0292	4-02-009 E	4.02-60	N/A	4-02-009-08 4-05-005-02
	SOLVENT, ETHYL ALCOHOL	0226	4-02-009 F	4.02-61	N/A	4-02-009-10 4-05-003-04 4-05-005-04
	SOLVENT, ISOPROPYL ALCOHOL	0227	4-02-009 G	4.02-62	N/A	4-02-009-12 4-05-003-05 4-05-004-03 4-05-005-05
	SOLVENT, ISOPROPYL ACETATE	0228	4-02-009 H	4.02-63	N/A	4-02-009-13
	SOLVENT, LACTOL SPIRITS	0229	4-02-009 J	4.02-64	N/A	4-02-009-15
	SOLVENT, METHYL ALCOHOL	0291	4-02-009 K	4.02-65	N/A	4-02-009-17
4-03	POINT SOURCE EVAPORATION, PETROLEUM PRODUCT STORAGE					
	FIXED ROOF, GASOLINE COMPOSITE WORKING & BREATHING LOSSES	0098	4-03-001 A	4.03-10	4.3	4-03-001-01, -03 4-03-002-01, -02 4-03-003-02
	FIXED ROOF, GASOLINE BREATHING, FCC UNIT & REFORMER BLEND	0187	4-03-001 E	4.03-11	4.3	4-03-001-01 4-03-002-01, -02
	PRODUCTION, FIXED ROOF, COMPOSITE PROFILE FOR CRUDE OIL	0296	4-03-001 C	4.03-12	4.3	4-03-001-02, -04

PROFILE TABLE SUMMARY INDEX (CONTINUED)

Section No.	Title	Profile Key No.	Table No.	Page No.	AP-42 Section	Applicable SCC
	REFINING, FIXED ROOF, COMPOSITE PROFILE FOR CRUDE OIL	0297	4-03-001 D	4.03-13	4.3	4-03-001-02, -04 4-03-002-03, -04
	FIXED ROOF, COMMERCIAL JET FUEL (JET A)	0100	4-03-001 E	4.03-14	4.3	4-03-001-05, -50 4-03-002-05 4-03-003-03
	FIXED ROOF, BENZENE	0298	4-03-001 F	4.03-15	4.3	4-03-001-08, -53 4-03-002-08 4-03-003-06
4-03	POINT SOURCE EVAPORATION, PETROLEUM PRODUCT STORAGE (CONTINUED)					
	FIXED ROOF, CYCLOHEXANE	0299	4-03-001 G	4.03-16	4.3	4-03-001-09, -54 4-03-002-09 4-03-003-07
	FIXED ROOF, CYCLOPENTANE	0300	4-03-001 H	4.03-17	4.3	4-03-001-10, -55 4-03-002-10 4-03-003-08
	FIXED ROOF, HEPTANE	0301	4-03-001 J	4.03-18	4.3	4-03-001-11, -56 4-03-002-11 4-03-003-09
	FIXED ROOF, HEXANE	0230	4-03-011 K	4.03-19	4.3	4-03-001-12, -57 4-03-002-12 4-03-003-10
	FIXED ROOF, ISO-OCTANE	0302	4-03-001 L	4.03-20	4.3	4-03-001-13, -58 4-03-002-13 4-03-003-11
	FIXED ROOF, ISOPENTANE	0231	4-03-001 M	4.03-21	4.3	4-03-001-14, -59 4-03-002-14 4-03-003-12
	FIXED ROOF, PENTANE	0303	4-03-001 N	4.03-22	4.3	4-03-001-15, -60 4-03-002-15 4-03-003-13
	FIXED ROOF, TOLUENE	0185	4-03-001 P	4.03-23	4.3	4-03-001-16, -61 4-03-002-16 4-03-003-14
	FIXED ROOF, COMPOSITE PROFILE FOR CRUDE OIL & WASTE WATER	0188	4-03-001 Q	4.03-24	4.3	4-03-001-98
	VARIABLE VAPOR SPACE, LIQUIFIED PETROLEUM GAS	0232	4-03-003	4.03-25	4.3	4-03-003-99

PROFILE TABLE SUMMARY INDEX (CONTINUED)

Section No.	Title	Profile Key No.	Table No.	Page No.	AP-42 Section	Applicable SCC
4-05	POINT SOURCE EVAPORATION, PRINTING PRESS					
	LETTERPRESS, INKING & DRYING (DIRECT GAS-FIRED DRYER)	0334	4-05-002 A	4.05-4	N/A	4-05-002-99
	LETTERPRESS, INKING PROCESS	0166	4-05-002 B	4.05-5	N/A	4-05-002-99
	FLEXOGRAPHIC, COMPOSITE OF ALCOHOL BASED SOLVENT	0172	4-05-003 A	4.05-9	N/A	4-05-003-01, -99
	FLEXOGRAPHIC, N-PROPYL ALCOHOL	0304	4-05-003 B	4.05-10	N/A	4-05-003-06 4-05-005-09
	LITHOGRAPHY, INKING & DRYING (DIRECT GAS-FIRED DRYER)	0333	4-05-004 A	4.05-14	N/A	4-05-004-99
	LITHOGRAPHY, INKING & DRYING	0332	4-05-004 B	4.05-15	N/A	4-05-004-99
	GRAVURE, PAPERBOARD PRINTING	0181	4-05-005 A	4.05-19	N/A	4-05-005-01
	GRAVURE, PERIODICALS, PRINTING SOLVENT	0183	4-05-005 B	4.05-20	N/A	4-05-005-01 4-05-005-99
	GRAVURE, COMMERCIAL PRINTING SOLVENT	0184	4-05-005 C	4.05-21	N/A	4-05-005-01, -99
	GRAVURE, GENERAL SOLVENT	0182	4-05-005 D	4.05-22	N/A	4-05-005-01, -99
4-06	POINT SOURCE EVAPORATION, PETROLEUM PRODUCT STORAGE					
	FIXED ROOF, COMPOSITE FOR CRUDE OIL, MARINE TERMINAL	0305	4-06-002	4.03-26	4.3	4-06-002-02, -27
5-01	SOLID WASTE GOVERNMENT					
	OPEN BURNING DUMP, LANDSCAPE/PRUNING	0121	5-01-002	5.01-4	2.4	5-02-001-02 5-02-002-02 5-03-002-02
	INCINERATOR, BAR SCREEN SEWAGE WASTE INCINERATOR	0122	5-01-005	5.01-8	N/A	5-01-005-99 5-02-005-99 5-03-005-99

PROFILE TABLE SUMMARY INDEX (CONTINUED)

Section No.	Title	Profile Key No.	Table No.	Page No.	AP-42 Section	Applicable SCC
9-01	AREA SOURCE EMISSIONS, RESIDENTIAL FUEL			9.01-1		
	NATURAL GAS	0195	9-01-005	9.01-3	1.4	9-01-005-00
9-06	AREA SOURCE EMISSIONS, GASOLINE FUEL			9.06-1		
	COMPOSITE OF ALL GRADES: LIGHT, HEAVY & OFF HIGHWAY VEHICLES COMPOSITE OF CONTROLLED AND UNCONTROLLED	0329	9-06-021 A	9.06-4	3.1 & 3.2	9-06-021-00 9-06-022-00 9-06-023-00 9-11-061-00 9-11-062-00 9-11-063-00 9-11-064-00
	UNLEADED 26% AROMATIC--LIGHT, HEAVY & OFF HIGHWAY VEHICLES CATALYST CONTROL	0326	9-06-021 B	9.06-5	3.1 & 3.2	9-06-021-00 9-06-022-00 9-06-023-00
	UNLEADED 26% AROMATIC--LIGHT, HEAVY & OFF HIGHWAY VEHICLES LEAN-BURN CONTROL	0327	9-06-021 C	9.06-6	3.1 & 3.2	9-06-021-00 9-06-022-00 9-06-023-00
	LEADED 22% AROMATIC--LIGHT, HEAVY, & OFF HIGHWAY VEHICLES, UNCONTROLLED	0328	9-06-021 D	9.06-7	3.1 & 3.2	9-06-021-00 9-06-022-00 9-06-023-00
	UNLEADED 40% AROMATIC--LIGHT, HEAVY & OFF HIGHWAY VEHICLES	0335	9-06-021 E	9.06-8	3.1 & 3.2	9-06-021-00 9-06-022-00 9-06-023-00
	EVAPORATIVE EMISSIONS--LIGHT, HEAVY, & OFF HIGHWAY VEHICLES	0336	9-06-021 F	9.06-9	3.1 & 3.2	9-06-021-00 9-06-022-00 9-06-023-00
	COMPOSITE GASOLINE VAPOR--LIGHT, HEAVY, & OFF HIGHWAY VEHICLES	0337	9.06-021 G	9.06-10	3.1 & 3.2	9-06-021-00 9-06-022-00 9-06-023-00

PROFILE TABLE SUMMARY INDEX (CONTINUED)

Section No.	Title	Profile Key No.	Table No.	Page No.	AP-42 Section	Applicable SCC
9-07	AREA SOURCE EMISSIONS, DIESEL FUEL			9.07-1		
	DIESEL FUEL, 32% AROMATIC-- LIGHT, HEAVY & OFF HIGHWAY VEHICLES	0330	9-07-021	9.07-3	3.1 & 3.2	9-07-021-00 9-07-022-00 9-07-023-00
9-11	AREA SOURCE EMISSIONS, MEASURED VEHICLE MILES			9.11-1		
	COMPOSITE OF GASOLINE & DIESEL FUELS VEHICLE EXHAUST	0325	9-11-061	9.11-2	3.1 & 3.2	9-11-061-00 9-11-062-00 9-11-063-00 9-11-064-00
9-13	AREA SOURCE EMISSIONS, MISCELLANEOUS BURNING			9.13-1		
	FOREST FIRES	0307	9-13-081	9.13-3	11.1	9-13-081-00
9-35	AREA SOURCE EMISSIONS, SOLVENT USE			9.35-1		
	ARCHITECTURAL SURFACE COATINGS, COMPOSITE	0196	9-35-103	9.35-3	4.2	9-35-103-00
	DOMESTIC SOLVENTS, GENERAL	0197	9-35-702	9.35-7	4.2	9-35-702-00
	PESTICIDES, DOMESTIC & COMMERCIAL, COMPOSITE FOR CALIFORNIA	0076	9-35-705	9.35-11	N/A	9-35-705-98
9-47	AREA SOURCE EMISSIONS, GEOGENIC			9.47-1		
	FORESTS	0204	9-47-409	9.47-4	N/A	9-47-409-99
	PETROLEUM SEEPS	0205	9-47-411	9.47-8	N/A	9-47-411-01
	CITRUS GROVES	0199	9-47-429	9.47-12	N/A	9-47-429-99
9-49	AREA SOURCE EMISSIONS, SOLID WASTE			9.49-1		
	LANDFILL SITE, CLASS II	0202	9-49-999 A	9.49-5	N/A	9-49-999-99
	ANIMAL WASTE DECOMPOSITION	0203	9-49-999 B	9.49-9	N/A	9-49-999-98

SCC SUMMARY INDEX

SCC SUMMARY INDEX

SCC NO.	TITLE	PROFILE KEY NO.	TABLE NO.	PAGE NO.	AP-42 SECTION
1-01-004-01	BOILER, ELECTRIC GENERATION RESIDUAL OIL >100MM BTU/HR	0001	1-01-004	1.01-3	1.3
1-01-004-02	BOILER, ELECTRIC GENERATION RESIDUAL OIL 10-100MM BTU/HR	0001	1-01-004	1.01-3	1.3
1-01-004-03	BOILER, ELECTRIC GENERATION RESIDUAL OIL <10MM BTU/HR	0001	1-01-004	1.01-3	1.3
1-01-005-01	BOILER, ELECTRIC GENERATION DISTILLATE OIL >100MM BTU/HR	0002	1-01-005	1.01-4	1.3
1-01-005-02	BOILER, ELECTRIC GENERATION DISTILLATE OIL 10-100MM BTU/HR	0002	1-01-005	1.01-4	1.3
1-01-005-03	BOILER ELECTRIC GENERATION DISTILLATE OIL <10MM BTU/HR	0002	1-01-005	1.01-4	1.3
1-01-006-01	BOILER, ELECTRIC GENERATION NATURAL GAS >100MM BTU/HR	0003	1-01-006	1.01-5	1.4
1-01-006-02	BOILER, ELECTRIC GENERATION NATURAL GAS 10-100MM BTU/HR	0003	1-01-006	1.01-5	1.4
1-01-006-03	BOILER, ELECTRIC GENERATION NATURAL GAS <10MM BTU/HR	0003	1-01-006	1.01-5	1.4
1-01-007-01	BOILER, ELECTRIC GENERATION PROCESS GAS >100MM BTU/HR	0004	1-01-007	1.01-6	N/A
1-01-007-02	BOILER, ELECTRIC GENERATION PROCESS GAS 10-100MM BTU/HR	0004	1-01-007	1.01-6	N/A
1-01-999-97	BOILER, ELECTRIC GENERATION NATURAL GAS - GENERAL	0003	1-01-006	1.01-5	1.4
1-01-997-99	BOILER, ELECTRIC GENERATION NATURAL GAS - GENERAL	0003	1-01-006	1.01-5	1.4
1-02-004-01	BOILER, INDUSTRIAL RESIDUAL OIL >100MM BTU/HR	0001	1-01-004	1.01-3	1.3
1-02-004-02	BOILER, INDUSTRIAL RESIDUAL OIL 10-100MM BTU/HR	0001	1-01-004	1.01-3	1.3
1-02-004-03	BOILER, INDUSTRIAL RESIDUAL OIL <10MM BTU/HR	0001	1-01-004	1.01-3	1.3
1-02-005-01	BOILER, INDUSTRIAL DISTILLATE OIL >100MM BTU/HR	0002	1-01-005	1.01-4	1.3

SCC SUMMARY INDEX (CONTINUED)

SCC NO.	TITLE	PROFILE KEY NO.	TABLE NO.	PAGE NO.	AP-42 SECTION
1-02-005-02	BOILER, INDUSTRIAL DISTILLATE OIL 10-100MM BTU/HR	0002	1-01-005	1.01-4	1.3
1-02-005-03	BOILER, INDUSTRIAL DISTILLATE OIL <10MM BTU/HR	0002	1-01-005	1.01-4	1.3
1-02-006-01	BOILER, INDUSTRIAL NATURAL GAS >100MM BTU/HR	0003	1-01-006	1.01-5	1.4
1-02-006-02	BOILER, ELECTRIC GENERATION NATURAL GAS 10-100MM BTU/HR	0003	1-01-006	1.01-5	1.4
1-02-006-03	BOILER, ELECTRIC GENERATION NATURAL GAS <10MM BTU/HR	0003	1-01-006	1.01-5	1.4
1-02-007-01	BOILER, INDUSTRIAL PROCESS GAS, REFINERY >100	0004	1-01-007	1.01-6	N/A
1-02-007-02	BOILER, INDUSTRIAL PROCESS GAS, REFINERY 10-100	0004	1-01-007	1.01-6	N/A
1-02-007-03	BOILER, INDUSTRIAL PROCESS GAS, REFINERY <10	0004	1-01-007	1.01-6	N/A
1-02-008-02	BOILER, INDUSTRIAL COKE 10-100MM BTU/HR	0005	1-02-008	1.01-7	N/A
1-02-010-02	BOILER, INDUSTRIAL LIQUID PETROLEUM GAS 10-100MM BTU/HR	0003	1-01-006	1.01-5	1.4
1-02-999-97	BOILER, INDUSTRIAL NATURAL GAS, OTHER/NOT CLASSIFIED	0003	1-01-006	1.01-5	1.4
1-03-004-02	BOILER, COMMERCIAL/INSTITUTIONAL RESIDUAL OIL 10-100MM BTU/HR	0001	1-01-004	1.01-3	1.3
1-03-004-03	BOILER, COMMERCIAL/INSTITUTIONAL RESIDUAL OIL <10MM BTU/HR	0001	1-01-004	1.01-3	1.3
1-03-005-01	BOILER, INDUSTRIAL DISTILLATE OIL >100MM BTU/HR	0002	1-01-005	1.01-4	1.3
1-03-005-02	BOILER, INDUSTRIAL DISTILLATE OIL 10-100MM BTU/HR	0002	1-01-005	1.01-4	1.3
1-03-005-03	BOILER, INDUSTRIAL DISTILLATE OIL <10MM BTU/HR	0002	1-01-005	1.01-4	1.3
1-03-006-01	BOILER, COMMERCIAL/INSTITUTIONAL NATURAL GAS >100MM BTU/HR	0003	1-01-006	1.01-5	1.4

SCC SUMMARY INDEX (CONTINUED)

SCC NO.	TITLE	PROFILE KEY NO.	TABLE NO.	PAGE NO.	AP-42 SECTION
1-03-006-02	BOILER, COMMERCIAL/INSTITUTIONAL NATURAL GAS 10-100MM BTU/HR	0003	1-01-006	1.01-5	1.4
1-03-006-03	BOILER, COMMERCIAL/INSTITUTIONAL NATURAL GAS <10MM BTU/HR	0003	1-01-006	1.01-5	1.4
1-03-010-03	BOILER, COMMERCIAL/INSTITUTIONAL LIQUID PETROLEUM GAS <10MM BTU/HR	0003	1-01-006	1.01-5	1.4
1-03-997-99	BOILER, COMMERCIAL/INSTITUTIONAL NATURAL GAS, OTHER/NOT CLASSIFIED	0003	1-01-006	1.01-5	1.4
1-03-999-97	BOILER, COMMERCIAL/INSTITUTIONAL NATURAL GAS, OTHER/NOT CLASSIFIED	0003	1-01-006	1.01-5	1.4
1-05-001-04	BOILER, SPACE HEATER INDUSTRIAL, RESIDUAL OIL	0001	1-01-004	1.01-3	1.3
1-05-001-05	BOILER, INDUSTRIAL, DISTILLATE OIL	0002	1-01-005	1.01-4	1.3
1-05-001-06	BOILER, SPACE HEATER INDUSTRIAL, NATURAL GAS	0003	1-01-006	1.01-5	1.4
1-05-002-04	BOILER, SPACE HEATER COMMERCIAL/ INSTITUTIONAL, RESIDUAL OIL	0001	1-01-004	1.01-3	1.3
1-05-002-05	BOILER, INDUSTRIAL, DISTILLATE OIL	0002	1-01-005	1.01-4	1.3
1-05-002-06	BOILER, SPACE HEATER, COMMERCIAL/ INSTITUTIONAL, NATURAL GAS	0003	1-01-006	1.01-5	1.4
2-01-002-01	INTERNAL COMBUSTION, ELECTRIC GENERATION, NATURAL GAS TURBINE	0007	2-01-002	2.01-3	3.3
2-01-003-01	INTERNAL COMBUSTION, ELECTRIC GENERATION, DIESEL RECIPROCATING	0008	2-01-003	2.01-4	3.3
2-02-001-02	INTERNAL COMBUSTION, INDUSTRIAL, DISTILLATE OIL RECIPROCATING	0009	2-02-001	2.01-5	3.3
2-02-002-01	INTERNAL COMBUSTION, INDUSTRIAL NATURAL GAS TURBINE	0007	2-01-002	2.01-3	3.3
2-02-002-02	INTERNAL COMBUSTION, INDUSTRIAL, NATURAL GAS RECIPROCATING	0010	2-02-002 A	2.01-6	3.3
2-02-002-02	INTERNAL COMBUSTION, INDUSTRIAL NATURAL GAS RECIPROCATING	0308	2-02-002 B	2.01-7	3.3
2-02-004-01	INTERNAL COMBUSTION, INDUSTRIAL DIESEL FUEL, RECIPROCATING	0008	2-01-003	2.01-4	3.3

SCC NO.	TITLE	PROFILE KEY NO.	TABLE NO.	PAGE NO.	AP-42 SECTION
3-01-015-01	CHEMICAL MANUFACTURING, VARNISH MFG., BODYING OIL GENERAL	0066	3-01-015	3.01-3	5.10
3-01-018-01	CHEMICAL MANUFACTURING, PLASTICS PVC-GENERAL	0067	3-01-018 A	3.01-7	5.13
3-01-018-02	CHEMICAL MANUFACTURING, PLASTICS POLYPROP-GENERAL	0068	3-01-018 B	3.01-8	5.13
3-01-019-03-	CHEMICAL MANUFACTURING, PHTHALIC ANHYDRIDE, UNCONTROLLED-GENERAL	0071	3-01-019 A	3.01-12	5.12
3-01-019-03	CHEMICAL MANUFACTURING, PHTHALIC ANHYDRIDE, UNCONTROLLED-GENERAL	0276	3-01-019 B	3.01-13	5.12
3-01-020-01	CHEMICAL MANUFACTURING, PRINTING INK, COOKING-GENERAL	0072	3-01-020	3.01-17	5.14
3-01-020-99	CHEMICAL MANUFACTURING, PRINTING INK, COOKING-GENERAL	0072	3-01-020	3.01-17	5.14
3-01-026-20	CHEMICAL MANUFACTURING, SYNTHETIC RUBBER, AUTO TIRES GENERAL	0272	3-01-026 A	3.01-21	N/A
3-01-026-20	CHEMICAL MANUFACTURING, SYNTHETIC RUBBER, AUTO TIRES-GENERAL	0273	3-01-026 B	3.01-22	N/A
3-01-026-20	CHEMICAL MANUFACTURING, SYNTHETIC RUBBER, AUTO TIRES-GENERAL	0274	3-01-026 C	3.01-23	N/A
3-01-125-02	CHEMICAL MANUFACTURING, ETHYLENE DICHLORIDE, DIRECT CHLORINATION	0078	3-01-125	3.01-28	N/A
3-01-125-99	CHEMICAL MANUFACTURING, ETHYLENE DICHLORIDE, OTHER/NOT CLASSIFIED	0078	3-01-125	3.01-28	N/A
3-01-999-99	CHEMICAL MANUFACTURING, OTHER/ NOT CLASSIFIED, SPECIFY IN REMARK	0079	3-01-999	3.01-32	N/A
3-02-007-99	INDUSTRIAL PROCESS, CHEMICAL MFG. OTHER/NOT CLASSIFIED	0003	1-01-006	1.01-5	1.4
3-02-008-99	INDUSTRIAL PROCESS, CHEMICAL MFG., OTHER/NOT CLASSIFIED	0003	1-01-006	1.01-5	1.4
3-02-009-02	CHEMICAL MANUFACTURING, FERMENTING BEER, DRYING SPNT. GRAIN	0003	1-01-006	1.01-5	1.4
3-02-009-03	CHEMICAL MANUFACTURING, FERMENTA-TION, BEER BREWING	0211	3-02-009	3.02-3	6.5
3-02-012-01	CHEMICAL MANUFACTURING, FISH MEAL COOKERS-FRESH FISH	0003	1-01-006	1.01-5	1.4
3-02-012-03	CHEMICAL MANUFACTURING, FISH MEAL DRYERS	0003	1-01-006	1.01-5	1.4
3-02-012-99	CHEMICAL MANUFACTURING, FISH MEAL, OTHER/NOT CLASSIFIED	0003	1-01-006	1.01-5	1.4

SCC SUMMARY INDEX (CONTINUED)

SCC NO.	TITLE	PROFILE KEY NO.	TABLE NO.	PAGE NO.	AP-42 SECTION
3-03-003-01	PRIMARY METALS, COKE METALLURGICAL BY PRODUCT GENERAL	0011	3-03-003	3.03-4	7.2
3-03-003-02	PRIMARY METALS, COKE METALLURGICAL BY PRODUCT, OVEN CHARGING	0011	3-03-003	3.03-4	7.2
3-03-003-03	PRIMARY METALS, COKE METALLURGICAL BY PRODUCT OVEN PUSHING	0011	3-03-003	3.03-4	7.2
3-03-003-04	PRIMARY METALS, COKE METALLURGICAL BY PRODUCT QUENCHING	0011	3-03-003	3.03-4	7.2
3-03-003-05	PRIMARY METALS, COKE METALLURGICAL BY PRODUCT UNLOADING	0011	3-03-003	3.03-4	7.2
3-03-003-06	PRIMARY METALS, COKE METALLURGICAL BY PRODUCT UNDERFIRING	0011	3-03-003	3.03-4	7.2
3-03-008-01	PRIMARY METALS, IRON PRODUCTION BLAST FURNACE--ORE CHARGE	0012	3-03-008 A	3.03-8	7.5
3-03-008-02	PRIMARY METALS, IRON PRODUCTION BLAST FURNACE--AGGLOM. CHARGING	0012	3-03-008 A	3.03-8	7.5
3-03-008-03	PRIMARY METALS, IRON PRODUCTION SINTERING GENERAL	0013	3-03-008 B	3.03-9	7.5
3-03-009-01	PRIMARY METALS, STEEL PRODUCTION OPEN HEARTH OXLANCE	0306	3-03-009 A	3.03-13	7.5
3-03-009-01	PRIMARY METALS, STEEL PRODUCTION OPEN HEARTH OXLANCE	0014	3-03-009 B	3.03-14	7.5
3-03-009-03	PRIMARY METALS, STEEL PRODUCTION BOF-GENERAL	0016	3-03-009 C	3.03-15	7.5
3-05-001-01	MINERAL PRODUCTS--ASPHALT ROOFING, BLOWING OPERATION	0021	3-05-001 A	3.05-4	8.2
3-05-001-02	MINERAL PRODUCTS--ASPHALT ROOFING, DIPPING ONLY	0022	3-05-001 B	3.05-5	8.2
3-05-001-04	MINERAL PRODUCTS--ASPHALT ROOFING, DIPPING/SPRAYING	0022	3-05-001 B	3.05-5	8.2
3-05-001-03	MINERAL PRODUCTS--ASPHALT ROOFING, SPRAYING ONLY	0023	3-05-001 C	3.05-6	8.2

SCC SUMMARY INDEX (CONTINUED)

SCC NO.	TITLE	PROFILE KEY NO.	TABLE NO.	PAGE NO.	AP-42 SECTION
3-05-001-99	MINERAL PRODUCTS--ASPHALT ROOFING, OTHER/NOT CLASSIFIED	0024	3-05-001 D	3.05-7	N/A
3-05-002-01	MINERAL PRODUCTS--ASPHALTIC CONCRETE, ROTARY DRYER	0025	3-05-002 A	3.05-11	8.1
3-05-002-02	MINERAL PRODUCTS--ASPHALTIC CONCRETE, OTHER SOURCES	0026	3-05-002 B	3.05-12	8.1
3-06-002-01	PETROLEUM INDUSTRY--FLUID CRACKERS, GENERAL (FCC)	0029	3-06-002	3.06-4	9.1
3-06-005-01	PETROLUEM INDUSTRY--PROCESS DRAINS, GENERAL W/CONTROL	0031	3-06-005	3.06-7	
3-06-007-01	PETROLEUM INDUSTRY--COOLING TOWERS	0035	3-06-007	3.06-10	
3-06-008-01	PETROLEUM INDUSTRY--MISCELLANEOUS PIPE/VALVE-FLANGE	0316	3-06-008 A	3.06-13	
3-06-008-01	PETROLEUM INDUSTRY--MISCELLANEOUS PIPE/VALVE-FLANGE	0317	3-06-008 B	3.06-14	
3-06-008-01	PETROLEUM INDUSTRY--MISCELLANEOUS PIPE/VALVE-FLANGE	0319	3-06-008 C	3.06-15	
3-06-008-01	PETROLEUM INDUSTRY--MISCELLANEOUS PIPE/VALVE-FLANGE	0322	3-06-008 D	3.06-16	
3-06-008-01	PETROLEUM INDUSTRY--MISCELLANEOUS PIPE/VALVE-FLANGE	0309	3-06-008 E	3.06-17	
3-06-008-01	PETROLEUM INDUSTRY--MISCELLANEOUS PIPE VALVE FLANGE	0318	3-06-008 F	3.06-18	
3-06-008-01	PETROLEUM INDUSTRY--MISCELLANEOUS PIPE/VALVE-FLANGE	0320	3-06-008 G	3.06-19	
3-06-008-01	PETROLUEM INDUSTRY--MISCELLANEOUS PIPE/VALVE-FLANGE	0324	3-06-008 H	3.06-20	
3-06-008-01	PETROLUEM INDUSTRY--MISCELLANEOUS PIPE/VALVE-FLANGE	0323	3-06-008 J	3.06-21	
3-06-008-01	PETROLUEM INDUSTRY--MISCELLANEOUS PIPE/VALVE-FLANGE	0041	3-06-008 K	3.06-22	
3-06-008-01	PETROLEUM INDUSTRY--MISCELLANEOUS PIPE/VALVE-FLANGE	0036	3-06-008 L	3.06-23	
3-06-008-01	PETROLEUM INDUSTRY--MISCELLANEOUS PIPE/VALVE-FLANGE	0042	3-06-008 M	3.06-24	

SCC SUMMARY INDEX (CONTINUED)

SCC NO.	TITLE	PROFILE KEY NO.	TABLE NO.	PAGE NO.	AP-42 SECTION
3-06-008-02	PETROLUEM INDUSTRY--MISCELLANEOUS RELIEF VALVE	0047	3-06-008 N	3.06-25	9.1
3-06-008-03	PETROLEUM INDUSTRY--MISCELLANEOUS PUMP SEALS	0321	3-06-008 P	3.06-28	
3-06-008-03	PETROLEUM INDUSTRY--MISCELLANEOUS PUMP SEALS	0312	3-06-008- Q	3-06-29	
3-06-008-03	PETROLEUM INDUSTRY--MISCELLANEOUS PUMP SEALS	0310	3-06-008 R	3.06-30	
3-06-008-03	PETROLEUM INDUSTRY--MISCELLANEOUS PUMP SEALS	0313	3-06-008 S	3.06-31	
3-06-008-03	PETROLEUM INDUSTRY--MISCELLANEOUS PUMP SEALS	0314	3-06-008 T	3.06-32	
3-06-008-03	PETROLEUM INDUSTRY--MISCELLANEOUS PUMP SEALS	0311	3-06-008 U	3.06-33	
3-06-008-03	PETROLEUM INDUSTRY--MISCELLANEOUS PUMP SEALS	0315	3-06-008 V	3.06-34	
3-06-008-03	PETROLEUM INDUSTRY--MISCELLANEOUS PUMP SEALS	0043	3-06-008 W	3.06-35	
3-06-008-03	PETROLEUM INDUSTRY--MISCELLANEOUS	0038	3-06-008 X	3.06-36	
3-06-008-04	PETROLEUM INDUSTRY--MISCELLANEOUS COMPRESSOR SEALS	0044	3-06-008 Y	3.06-37	
3-06-008-04	PETROLEUM INDUSTRY--MISCELLANEOUS	0039	3-06-0082	3.06-38	
3-06-009-01	PETROLEUM INDUSTRY--FLARES NATURAL GAS	0051	3-06-009	3.06-41	
3-06-013-01	PETROLEUM INDUSTRY--CATALYTIC REFORM, GENERAL	0053	3-06-013	3.06-43	
3-30-001-99	TEXTILE MFG--GENERAL FABRICS YARN PREP/BLEACH	0060	3-30-001	3.30-2	N/A
3-90-004-01	IN PROCESS FUEL--RESIDUAL OIL ASPHALT DRYER	0001	1-01-004	3.90-3	1.3
3-90-004-02	IN PROCESS FUEL--RESIDUAL OIL ASPHALT DRYER	0001	1-01-004	3.90-3	1.3
3-90-004-03	IN PROCESS FUEL--RESIDUAL OIL ASPHALT DRYER	0001	1-01-004	3.90-3	1.3

SCC SUMMARY INDEX (CONTINUED)

SCC NO.	TITLE	PROFILE KEY NO.	TABLE NO.	PAGE NO.	AP-42 SECTION
3-90-004-05	IN PROCESS FUEL--RESIDUAL OIL ASPHALT DRYER	0001	1-01-004	3.90-3	1.3
3-90-004-99	IN PROCESS FUEL--RESIDUAL OIL OTHER/NOT CLASSIFIED	0001	1-01-004	3.90-3	
3-90-005-01	IN PROCESS FUEL--DISTILLATE OIL ASPHALT DRYER	0002	1-01-005	3.90-4	
3-90-005-02	IN PROCESS FUEL--DISTILLATE OIL CEMENT KILN/DRYER	0002	1-01-005	3.90-4	
3-90-005-03	IN PROCESS FUEL--DISTILLATE OIL LIME KILN	0002	1-01-005	3.90-4	
3-90-005-04	IN PROCESS FUEL--DISTILLATE OIL KAOLIN KILN	0002	1-01-005	3.90-4	
3-90-005-05	IN PROCESS FUEL--DISTILLATE OIL METAL MELTING	0002	1-01-005	3.90-4	
3-90-005-07	IN PROCESS FUEL--DISTILLATE OIL GYPSUM KILN/ETC.	0002	1-01-005	3.90-4	
3-90-005-08	IN PROCESS FUEL--DISTILLATE OIL GLASS FURNACE	0002	1-01-005	3.90-4	
3-90-005-09	IN PROCESS FUEL--DISTILLATE OIL ROCK/GRAVEL DRYER	0002	1-01-005	3.90-4	
3-90-005-99	IN PROCESS FUEL--DISTILLATE OIL OTHER/NOT CLASSIFIED	0002	1-01-005	3.90-4	
3-90-006-01	IN PROCESS FUEL--NATURAL GAS ASPHALT DRYER	0003	1-01-006	3.90-5	1.4
3-90-006-02	IN PROCESS FUEL--NATURAL GAS CEMENT KILN/DRYER	0003	1-01-006	3.90-5	
3-90-006-03	IN PROCESS FUEL--NATURAL GAS LIME KILN	0003	1-01-006	3-90-5	
3-90-006-05	IN PROCESS FUEL--NATURAL GAS METAL MELTING	0003	1-01-006	3.90-5	
3-90-006-06	IN PROCESS FUEL--NATURAL GAS BRICK KILN/DRYERS	0003	1-01-006	3.90-5	
3-90-006-07	IN PROCESS FUEL--NATURAL GAS GYPSUM KILN ETC.	0003	1-01-006	3.90-5	
3-90-006-08	IN PROCESS FUEL--NATURAL GAS GLASS FURNACE	0003	1-01-006	3.90-5	

SCC SUMMARY INDEX (CONTINUED)

SCC NO.	TITLE	PROFILE KEY NO.	TABLE NO.	PAGE NO.	AP-42 SECTION
3-90-006-09	IN PROCESS FUEL--NATURAL GAS ROCK/GRAVEL DRYER	0003	1-01-006	3.90-5	1.4
3-90-006-31	IN PROCESS FUEL--NATURAL GAS FOOD-DRYER/COOK/ETC.	0003	1-01-006	3.90-5	1.4
3-90-006-99	IN PROCESS FUEL--NATURAL GAS OTHER/NOT CLASSIFIED	0003	1-01-006	3.90-5	1.4
3-90-007-01	IN PROCESS FUEL--PROCESS GAS CO/BLAST FURNACE	0217	3-90-007	3.90-3	N/A
3-90-007-02	IN PROCESS FUEL--PROCESS GAS COKE OVEN GAS	0005	1-02-008	3.90-7	N/A
3-90-007-99	IN PROCESS FUEL--PROCESS GAS OTHER/NOT CLASSIFIED	0003	1-01-006	3.90-5	1.4
3-90-008-01	IN PROCESS FUEL--COKE MINERAL WOOL FURNACE	0005	1-02-008	3.90-7	N/A
3-90-008-99	IN PROCESS FUEL--COKE OTHER/NOT CLASSIFIED	0005	1-02-008	3.90-7	N/A
3-90-010-99	IN PROCESS FUEL--LIQUID PETROLEUM GAS, OTHER/NOT CLASSIFIED	0003	1-01-006	3.90-5	1.4
3-90-999-97	IN PROCESS FUEL--OTHER/NOT CLASSIFIED, SPECIFY IN REMARK	0003	1-01-006	3.90-5	1.4
3-90-999-98	IN PROCESS FUEL--OTHER/ NOT CLASSIFIED	0001	1-01-004	3.90-3	1.3
3-90-999-99	IN PROCESS FUEL--OTHER/ NOT CLASSIFIED, SPECIFY IN REMARK	0003	1-01-006	3.90-5	1.4
3-97-020-99	IN PROCESS FUEL--OTHER/ NOT CLASSIFIED	0003	1-01-006	3.90-5	1.4
4-01-001-01	CLEANING SOLVENT--DRY CLEANING PERCHLOROETHYLENE	0085	4-01-001 C	4.01-6	4.1
4-01-001-02	CLEANING SOLVENT--DRY CLEANING STODDARD	0086	4-01-001 B	4.01-5	4.1
4-01-001-99	CLEANING SOLVENT--DRY CLEANING SPECIFY SOLVENT	0087	4-01-001 A	4.01-4	4.1
4-01-002-01	CLEANING SOLVENT--DEGREASING STODDARD	0086	4-01-001 B	4.01-5	4.1

SCC SUMMARY INDEX (CONTINUED)

SCC NO.	TITLE	PROFILE KEY NO.	TABLE NO.	PAGE NO.	AP-42 SECTION
4-01-002-02	CLEANING SOLVENT--DEGREASING TRICHLOROETHANE	0087	4-01-001 A	4.01-4	4.1
4-01-002-02	CLEANING SOLVENT--DEGREASING TRICHLOROETHANE	0088	4-01-002 A	4.01-10	N/A
4-01-002-03	CLEANING SOLVENT--DEGREASING PERCHLOROETHYLENE	0085	4-01-001 C	4.01-6	4.1
4-01-002-04	CLEANING SOLVENT--DEGREASING METHYLENE CHLORIDE	0275	4-01-002 B	4.01-11	N/A
4-01-002-05	CLEANING SOLVENT--DEGREASING TRICHLOROETHYLENE	0271	4-01-002 C	4.01-12	
4-01-002-06	CLEANING SOLVENT--DEGREASING TOLUENE	0090	4-01-002 D	4.01-13	
4-01-002-99	CLEANING SOLVENT--DEGREASING OTHER/NOT CLASSIFIED	0088	4-01-002 E	4.01-10	
4-01-002-99	CLEANING SOLVENT--DEGREASING OTHER/NOT CLASSIFIED	0277	4-01-002 G	4.01-15	
4-02-001-01	SURFACE COATING--PAINT GENERAL	0125	4-02-001 A	4.02-5	4.2
4-02-001-02	SURFACE COATING--PAINT ACETONE	0219	4-02-001 B	4.02-6	
4-02-001-03	SURFACE COATING--PAINT ETHYL ACETATE	0220	4-02-001 C	4.02-7	
4-02-001-04	SURFACE COATING--PAINT, MEK	0221	4-02-001 D	4.02-8	
4-02-003-01	SURFACE COATING--VARNISH/SHELLAC GENERAL	0127	4-02-003 A	4.02-9	
4-02-003-01	SURFACE COATING--VARNISH/SHELLAC GENERAL	0132	4-02-003 B	4.02-10	
4-02-003-01	SURFACE COATING--VARNISH/SHELLAC GENERAL	0278	4-02-003 C	4.02-11	
4-02-003-01	SURFACE COATING--VARNISH/SHELLAC GENERAL	0133	4-02-003 D	4.02-12	
4-02-003-02	SURFACE COATING--VARNISH/SHELLAC ACETONE	0219	4-02-001 B	4.02-6	
4-02-003-03	SURFACE COATING--VARNISH/SHELLAC ETHYL ACETATE	0220	4-02-001 C	4.02-7	
4-02-003-05	SURFACE COATING--VARNISH/SHELLAC XYLENE	0223	4-02-003 E	4.02-13	

SCC SUMMARY INDEX (CONTINUED)

SCC NO.	TITLE	PROFILE KEY NO.	TABLE NO.	PAGE NO.	AP-42 SECTION
4-02-004-01	SURFACE COATING--LACQUER GENERAL	0149	4-02-004 A	4.02-14	4.2
4-02-004-01	SURFACE COATING--LACQUER GENERAL	0148	4-02-004 B	4.02-15	
4-02-004-01	SURFACE COATING--LACQUER GENERAL	0147	4-02-004 C	4.02-16	
4-02-004-01	SURFACE COATING--LACQUER GENERAL	0155	4-02-004 D	4.02-17	
4-02-004-01	SURFACE COATING--LACQUER GENERAL	0146	4-02-004 E	4.02-18	
4-02-004-01	SURFACE COATING--LACQUER GENERAL	0150	4-02-004 F	4.02-19	
4-02-004-02	SURFACE COATING--LACQUER ACETONE	0219	4-02-001 B	4.02-6	
4-02-004-03	SURFACE COATING--LACQUER ETHYL ACETATE	0220	4-02-001 C	4.02-7	
4-02-004-99	SURFACE COATING--LACQUER SOLVENT GENERAL	0149	4-02-004 A	4.02-14	
4-02-004-99	SURFACE COATING--LACQUER SOLVENT GENERAL	0148	4-02-004 B	4.02-15	
4-02-004-99	SURFACE COATING--LACQUER SOLVENT GENERAL	0147	4-02-004 C	4.02-16	
4-02-004-99	SURFACE COATING--LACQUER	0155	4-02-004 D	4.02-17	
4-02-006-99	SURFACE COATING--PRIMER SOLVENT GENERAL	0146	4-02-004 E	4.02-18	
4-02-004-99	SURFACE COATING--LACQUER SOLVENT GENERAL	0150	4-02-004 F	4.02-19	
4-02-005-01	SURFACE COATING--ENAMEL GENERAL	0156	4-02-005 A	4.02-20	
4-02-005-01	SURFACE COATING--ENAMEL GENERAL	0159	4-02-005 B	4.02-21	
4-02-005-01	SURFACE COATING--ENAMEL GENERAL	0157	4-02-005 C	4.02-22	
4-02-005-01	SURFACE COATING--ENAMEL GENERAL	0164	4-02-005 D	4.02-23	
4-02-005-02	SURFACE COATING--ENAMEL CELLOSOLVE ACETATE	0222	4-02-005 E	4.02-24	

SCC SUMMARY INDEX (CONTINUED)

SCC NO.	TITLE	PROFILE KEY NO.	TABLE NO.	PAGE NO.	AP-42 SECTION
4-02-005-03	SURFACE COATING--ENAMEL, MEK	0221	4-02-001 D	4.02-3	4.2
4-02-005-99	SURFACE COATING--ENAMEL SOLVENT GENERAL	0156	4-02-005 A	4.02-20	
4-02-005-99	SURFACE COATING--ENAMEL SOLVENT GENERAL	0159	4-02-005 B	4.02-21	
4-02-005-99	SURFACE COATING--ENAMEL SOLVENT GENERAL	0157	4-02-005 C	4.02-22	
4-02-005-99	SURFACE COATING--ENAMEL SOLVENT GENERAL	0164	4-02-005 D	4.02-23	
4-02-006-01	SURFACE COATING--PRIMER GENERAL	0134	4-02-006 A	4.02-25	
4-02-006-01	SURFACE COATING--PRIMER GENERAL	0137	4-02-006 B	4.02-26	
4-02-006-01	SURFACE COATING--PRIMER GENERAL	0136	4-02-006 C	4.02-27	
4-02-006-01	SURFACE COATING--PRIMER GENERAL	0331	4-02-006 D	4.02-28	
4-02-006-01	SURFACE COATING--PRIMER GENERAL	0280	4-02-006 E	4.02-29	
4-02-006-01	SURFACE COATING--PRIMER GENERAL	0281	4-02-006 F	4.02-30	
4-02-006-02	SURFACE COATING--PRIMER NAPHTHA	0282	4-02-006 G	4.02-31	
4-02-006-04	SURFACE COATING--PRIMER MINERAL SPIRITS	0225	4-02-006 J	4.02-33	
4-02-006-04	SURFACE COATING--PRIMER MINERAL SPIRITS	0283	4-02-006 H	4.02-32	
4-02-006-99	SURFACE COATING--PRIMER SOLVENT GENERAL	0134	4-02-006 A	4.02-25	
4-02-006-99	SURFACE COATING--PRIMER SOLVENT GENERAL	0284	4-02-006 K	4.02-34	N/A
4-02-007-01	SURFACE COATING--ADHESIVE GEN.	0141	4-02-007 A	4.02-35	
4-03-007-01	SURFACE COATING--ADHESIVE GEN.	0142	4-02-007 B	4.02-36	
4-02-007-01	SURFACE COATING--ADHESIVE GEN.	0285	4-02-007 C	4.02-37	
4-02-007-01	SURFACE COATING--ADHESIVE GEN.	0145	4-02-007 D	4.02-38	

SCC SUMMARY INDEX (CONTINUED)

SCC NO.	TITLE	PROFILE KEY NO.	TABLE NO.	PAGE NO.	AP-42 SECTION
4-02-007-02	SURFACE COATING--ADHESIVE, MEK	0221	4-02-001 D	4.02-8	4.2
4-02-007-04	SURFACE COATING--ADHESIVE, BENZENE	0287	4-02-007 E	4.02-39	N/A
4-02-007-05	SURFACE COATING--ADHESIVE, NAPHTHA	0282	4-02-006 G	4.02-31	4.2
4-02-007-99	SURFACE COATING--ADHESIVE SOLVENT GENERAL	0145	4-02-007 E	4.02-38	N/A
4-02-008-01	SURFACE COATING--COATING OVEN GENERAL	0092	4-02-008 A	4.02-47	
4-02-008-03	SURFACE COATING--COATING OVEN BAKED > 175°F	0279	4-02-008 B	4.02-48	
4-02-008-99	SURFACE COATING--COATING OVEN OTHER/SPECIFY	0056	4-02-008 C	4.02-49	
4-02-008-99	SURFACE COATING--COATING OVEN OTHER/SPECIFY	0286	4-02-008 D	4.02-50	
4-02-008-99	SURFACE COATING--COATING OVEN OTHER/SPECIFY	0162	4-02-008 E	4.02-51	
4-02-008-99	SURFACE COATING--COATING OVEN OTHER/SPECIFY	0154	4-02-008 F	4.02-52	
4-02-009-01	SURFACE COATING--SOLVENT GENERAL	0096	4-02-009 A	4.02-56	
4-02-009-02	SURFACE COATING--SOLVENT ACETONE	0219	4-02-001 B	4.02-6	4.2
4-02-009-03	SURFACE COATING--SOLVENT BUTYL ACETATE	0288	4-02-009 B	4.02-57	N/A
4-02-009-04	SURFACE COATING--SOLVENT BUTYL ALCOHOL	0289	4-02-009 C	4.02-58	N/A
4-02-009-06	SURFACE COATING--SOLVENT CELLOSOLVE	0290	4-02-009 D	4.02-59	N/A
4-02-009-07	SURFACE COATING--SOLVENT CELLOSOLVE ACETATE	0222	4-02-005 E	4.02-24	4.2
4-02-009-08	SURFACE COATING--SOLVENT DIMETHYLFORMAMIDE	0292	4-02-009 E	4.02-60	N/A
4-02-009-10	SURFACE COATING--SOLVENT ETHYL ALCOHOL	0226	4-02-009 F	4.02-61	
4-02-009-12	SURFACE COATING--SOLVENT ISOPROPYL ALCOHOL	0227	4-02-009 G	4.02-62	
4-02-009-13	SURFACE COATING--SOLVENT ISOPROPYL ACETATE	0228	4-02-009 H	4.02-63	
4-02-009-15	SURFACE COATING--SOLVENT LACTOL SPIRITS	0229	4-02-009 J	4.02-64	
4-02-009-17	SURFACE COATING--SOLVENT METHYL ALCOHOL	0291	4-02-009 K	4.02-65	

SCC SUMMARY INDEX (CONTINUED)

SCC NO.	TITLE	PROFILE KEY NO.	TABLE NO.	PAGE NO.	AP-42 SECTION
4-02-009-18	SURFACE COATING--SOLVENT, MEK	0221	4-02-001 D	4.02-8	4.2
4-02-009-20	SURFACE COATING--SOLVENT MINERAL SPIRITS	0283	4-02-006 H	4.02-34	
4-02-009-21	SURFACE COATING--SOLVENT, NAPHTHA	0282	4-02-006 G	4.02-33	
4-02-009-24	SURFACE COATING--SOLVENT, XYLENE	0223	4-02-003 E	4.02-13	
4-02-999-99	SURFACE COATING--OTHER/NOT CLASSIFIED, SPECIFY IN REMARK	0293	4-02-999 A	4.02-40	N/A
4-02-999-99	SURFACE COATING--OTHER/NOT CLASSIFIED, SPECIFY IN REMARK	0294	4-02-999 B	4.02-41	N/A
4-02-999-99	SURFACE COATING--OTHER/NOT CLASSIFIED, SPECIFY IN REMARK	0295	4-02-999 C	4.02-42	N/A
4-03-001-01	PETROL PROD. STG.--FIXED ROOF BREATH-GASOLINE, COMPOSITE	0098	4-03-001 A	4.03-10	4.3
4-03-001-01	PETROL PROD. STG.--FIXED ROOF BREATH-GASOLINE, FCCU & REFORMER BLEND	0187	4-03-001 B	4.03-11	
4-03-001-02	PETROL PROD. STG.--FIXED ROOF BREATH-CRUDE	0296	4-03-001 C	4.03-12	
4-03-001-02	PETROL PROD. STG.--FIXED ROOF BREATH-CRUDE	0297	4-03-001 D	4.03-13	
4-03-001-03	PETROL PROD. STG--FIXED ROOF WORKING GASOLINE, COMPOSITE	0098	4-03-001 A	4.03-10	
4-03-001-03	PETROL PROD. STG.--FIXED ROOF, WORKING GASOLINE, FCCU & REFORMER BLEND	0187	4-03-001 B	4.03-11	
4-03-001-04	PETROL PROD. STG.--FIXED ROOF WORKING CRUDE	0296	4-03-001 C	4.03-12	
4-03-001-04	PETROL PROD. STG.--FIXED ROOF WORKING CRUDE	0297	4-03-001 D	4.03-13	
4-03-001-05	PETROL PROD. STG.--FIXED ROOF BREATH-JET A	0100	4-03-001 E	4.03-14	
4-03-001-08	PETROL PROD. STG.--FIXED ROOF BREATH-BENZENE	0298	4-03-001 F	4.03-15	
4-03-001-09	PETROL PROD. STG.--FIXED ROOF BREATH-CYCLOHEX	0299	4-03-001 G	4.03-16	

SCC SUMMARY INDEX (CONTINUED)

SCC NO.	TITLE	PROFILE KEY NO.	TABLE NO.	PAGE NO.	AP-42 SECTION
4-03-001-10	PETROL. PROD. STG--FIXED ROOF BREATH--CYCLOPENTANE	0300	4-03-001 H	4.03-17	4.3
4-03-001-11	PETROL. PROD. STG--FIXED ROOF BREATH--HEPTANE	0301	4-03-001 J	4.03-18	
4-03-001-12	PETROL. PROD. STG--FIXED ROOF BREATH--HEXANE	0230	4-03-001 K	4.03-19	
4-03-001-13	PETROL. PROD. STG--FIXED ROOF BREATH--ISO OCTANE	0302	4-03-001 L	4.03-20	
4-03-001-14	PETROL. PROD. STG--FIXED ROOF BREATH--ISOPENTANE	0231	4-03-001 M	4.03-21	
4-03-001-15	PETROL. PROD. STG--FIXED ROOF BREATH--PENTANE	0303	4-03-001 N	4.03-22	
4-03-001-16	PETROL. PROD. STG--FIXED ROOF BREATH--TOLUENE	0185	4-03-001 P	4.03-23	
4-03-001-50	PETROL. PROD. STG--FIXED ROOF WORKING JET A	0100	4-03-001 E	4.03-14	
4-03-001-53	PETROL. PROD. STG--FIXED ROOF WORKING-BENZENE	0298	4-03-001 F	4.03-15	
4-03-001-54	PETROL PROD. STG--FIXED ROOF WORKING CYCLOHEX	0299	4-03-001 G	4.03-16	
4-03-001-55	PETROL. PROD. STG--FIXED ROOF WORKING--CYCLOPENTANE	0300	4-03-001 H	4.03-17	
4-03-001-56	PETROL. PROD. STG--FIXED ROOF WORKING--HEPTANE	0301	4-03-001 J	4.03-18	
4-03-001-57	PETROL PROD. STG--FIXED ROOF WORKING--HEXANE	0230	4-03-001 K	4.03-19	
4-03-001-58	PETROL PROD. STG--FIXED ROOF WORKING--ISO OCTANE	0302	4-03-001 L	4.03-20	
4-03-001-59	PETROL. PROD. STG--FIXED ROOF WORKING--ISOPENTANE	0231	4-03-001 M	4.03-21	
4-03-001-60	PETROL PROD. STG--FIXED ROOF WORKING--PENTANE	0303	4-03-001 N	4.03-22	
4-03-001-61	PETROL PROD. STG--FIXED ROOF WORKING--TOLUENE	0185	4-03-001 P	4.03-23	
4-03-001-98	PETROL. PROD. STG--FIXED ROOF WORKING--CRUDE OIL & WASTE WATER	0188	4-03-001 Q	4.03-24	

SCC SUMMARY INDEX (CONTINUED)

SCC NO.	TITLE	PROFILE KEY NO.	TABLE NO.	PAGE NO.	AP-42 SECTION
4-03-002-01	PETROL PROD. STG.--FLOATING ROOF STAND STG-GASOLINE, COMPOSITE	0098	4-03-001 A	4.03-10	
4-03-002-01	PETROL PROD. STG.--FLOATING ROOF, STAND STG.-GASOLINE, FCCU & REFORMER BLEND	0187	4-03-001 B	4.03-11	
4-03-002-02	PETROL PROD. STG.--FLOATING ROOF WORKING-PRODUCT, COMPOSITE	0098	4-03-001 A	4.03-10	
4-03-002-02	PETROL PROD. STG.--FLOATING ROOF, WORKING PRODUCT, FCCU & REFORMER BLEND	0187	4-03-001 B	4.03-11	
4-03-002-03	PETROL PROD. STG.--FLOATING ROOF STAND STG-CRUDE	0297	4-03-001 D	4.03-13	
4-03-002-04	PETROL PROD. STG.--FLOATING ROOF WORKING-CRUDE	0297	4-03-001 D	4.03-13	
4-03-002-05	PETROL PROD. STG.--FLOATING ROOF STAND STG-JET FUEL	0100	4-03-001 E	4.03-14	
4-03-002-08	PETROL PROD. STG.--FLOATING ROOF STAND STG-BENZENE	0298	4-03-001 F	4.03-15	
4-03-002-09	PETROL PROD. STG.--FLOATING ROOF STAND STG-CYCLOHEX	0299	4-03-001 G	4.03-16	
4-03-002-10	PETROL. PROD. STG--FLOATING ROOF STAND STG--CYCLOPENTANE	0300	4-03-001 H	4.03-17	
4-03-002-11	PETROL. PROD. STG--FLOATING ROOF STAND STG--HEPTANE	0301	4-03-001 J	4.03-18	
4-03-002-12	PETROL. PROD. STG--FLOATING ROOF STAND STG--HEXANE	0230	4-03-001 K	4.03-19	
4-03-002-13	PETROL. PROD. STG--FLOATING ROOF STAND STG--ISO OCTANE	0302	4-03-001 L	4.03-20	
4-03-002-14	PETROL. PROD. STG--FLOATING ROOF STAND STG--ISOPENTANE	0231	4-03-001 M	4.03-21	
4-03-002-15	PETROL PROD. STG--FLOATING ROOF STAND STG--PENTANE	0303	4-03-001 N	4.03-22	
4-03-002-16	PETROL PROD. STG--FLOATING ROOF STAND STG--TOLUENE	0185	4-03-001 P	4.03-23	
4-03-003-02	PETROL PROD. STG.--VAPOR SPACE WORKING GASOLINE, COMPOSITE	0098	4-03-001 A	4.03-10	
4-03-003-03	PETROL PROD. STG.--VAPOR SPACE WORKING-JET A	0100	4-03-001 E	4.03-14	
4-03-003-06	PETROL PROD. STG.--VAPOR SPACE WORKING-BENZENE	0298	4-03-001 F	4.03-15	
4-03-003-07	PETROL PROD. STG.--VAPOR SPACE WORKING-CYCLOHEX	0299	4-03-001 G	4.03-16	

SCC SUMMARY INDEX (CONTINUED)

SCC NO.	TITLE	PROFILE KEY NO.	TABLE NO.	PAGE NO.	AP-42 SECTION
4-03-003-08	PETROL. PROD. STG--VAPOR SPACE WORKING--CYCLOPENTANE	0300	4-03-001 H	4.03-17	
4-03-003-09	PETROL. PROD. STG--VAPOR SPACE WORKING--HEPTANE	0301	4-03-001 J	4.03-18	
4-03-003-10	PETROL. PROD. STG--VAPOR SPACE WORKING--HEXANE	0230	4-03-001 K	4.03-19	
4-03-003-11	PETROL. PROD. STG--VAPOR SPACE WORKING--ISO OCTANE	0302	4-03-001 L	4.03-20	
4-03-003-12	PETROL. PROD. STG--VAPOR SPACE WORKING--ISOPENTANE	0231	4-03-001 M	4.03-21	
4-03-003-13	PETROL. PROD. STG--VAPOR SPACE WORKING--PENTANE	0303	4-03-001 N	4.03-22	
4-03-003-14	PETROL PROD. STG--VAPOR SPACE WORKING--TOLUENE	0185	4-03-001 P	4.03-23	
4-03-003-99	PETROL PROD. STG--VAPOR SPACE WORKING--LPG	0232	4-03-003	4.03-25	
4-05-002-03	PRINTING PRESS--LETTER PRESS MINERAL SPIRITS	0283	4-02-006 H	4.02-32	4.2
4-05-002-99	PRINTING PRESS--LETTER PRESS INKING AND DRYING, SOLVENT GENERAL	0334	4-05-002 A	4.05-4	N/A
4-05-002-99	PRINTING PRESS--LETTER PRESS INKING PROCESS, SOLVENT GENERAL	0166	4-05-002 B	4.05-5	N/A
4-05-003-01	PRINTING PRESS--FLEXOGRAPHIC ALCOHOL COMPOSITE, GENERAL	0172	4-05-003 A	4.05-9	N/A
4-05-003-03	PRINTING PRESS--FLEXOGRAPHIC CELLOSOLVE	0290	4-02-009 D	4.02-59	N/A
4-05-003-04	PRINTING PRESS--FLEXOGRAPHIC ETHYL ALCOHOL	0226	4-02-009 F	4.02-61	N/A
4-05-003-05	PRINTING PRESS--FLEXOGRAPHIC ISOPROPYL ALCOHOL	0227	4-02-009 G	4.02-62	N/A
4-05-003-06	PRINTING PRESS--FLEXOGRAPHIC N-PROPYL ALCOHOL	0304	4-05-003 B	4.05-10	N/A
4-05-003-07	PRINTING PRESS--FLEXOGRAPHIC NAPHTHA	0282	4-02-006 G	4.02-63	4.2
4-05-003-99	PRINTING PRESS--FLEXOGRAPHIC SOLVENT GENERAL	0172	4-05-003 A	4.05-9	N/A

SCC NO.	TITLE	PROFILE KEY NO.	TABLE NO.	PAGE NO.	AP-42 SECTION
4-05-004-02	PRINTING PRESS--LITHOGRAPHIC MINERAL SPIRITS	0283	4-02-006 H	4.05-34	4.2
4-05-004-03	PRINTING PRESS--LITHOGRAPHIC ISOPROPYL ALCOHOL	0227	4-02-009 G	4.02-62	N/A
4-05-004-99	PRINTING PRESS--LITHOGRAPHIC SOLVENT GENERAL	0333	4-05-004 A	4.05-14	N/A
4-05-004-99	PRINTING PRESS--LITHOGRAPHIC SOLVENT GENERAL	0332	4-05-004 B	4.05-15	N/A
4-05-005-01	PRINTING PRESS--GRAVURE PAPERBOARD	0181	4-05-005 A	4.05-19	N/A
4-05-005-01	PRINTING PRESS--GRAVURE PERIODICALS	0183	4-05-005 B	4.05-20	N/A
4-05-005-01	PRINTING PRESS--GRAVURE COMMERCIAL	0184	4-05-005 C	4.05-21	N/A
4-05-005-01	PRINTING PRESS--GRAVURE GENERAL	0182	4-05-005 D	4.05-22	N/A
4-05-005-02	PRINTING PRESS--GRAVURE DIMETHYLFORMAMIDE	0292	4-02-009 E	4.02-60	
4-05-005-04	PRINTING PRESS--GRAVURE ETHYL ALCOHOL	0226	4-02-009 F	4.02-61	
4-05-005-05	PRINTING PRESS--GRAVURE ISOPROPYL ALCOHOL	0227	4-02-009 G	4.02-62	
4-05-005-06	PRINTING PRESS--GRAVURE, MEK	0221	4-02-001 D	4.02-8	4.2
4-05-005-08	PRINTING PRESS--GRAVURE MINERAL SPIRITS	0283	4-02-006 H	4.02-32	4.2
4-06-002-02	PETROL. PROD. STG--FIXED ROOF LOADING--MARINE TERMINAL CRUDE	0305	4-06-002	4.03-26	4.3
4-06-002-27	PETROL. PROD. STG--FIXED ROOF UNLOADING--MARINE TERMINAL CRUDE	0305	4-06-002	4.03-26	4.3
5-01-005-99	GOV'T--INCINERATOR GEN. BAR SCREEN WASTE	0122	5-01-005	5.01-8	2.1
5-02-001-02	GOV'T--INCINERATOR, SINGLE CHAMBER	0121	5-01-002	5.01-4	2.1
5-02-002-02	GOV'T--OPEN BURNING, REFUSE	0121	5-01-002	5.01-4	2.1
5-02-005-99	GOV'T--INCINERATOR BAR SCREEN WASTE	0122	5-01-005	5.01-8	2.1

SCC SUMMARY INDEX (CONTINUED)

SCC NO.	TITLE	PROFILE KEY NO.	TABLE NO.	PAGE NO.	AP-42 SECTION
5-03-002-02	INDUSTRIAL--OPEN BURNING REFUSE	0121	5-01-002	5.01-4	2.1
5-03-005-99	INDUSTRIAL--INCINERATOR BAR SCREEN WASTE	0122	5-01-005	5.01-8	2.1
9-01-005-00	RESIDENTIAL FUEL--NATURAL GAS	0195	9-01-005	9.01-3	1.4
9-06-021-00	GASOLINE FUEL COMPOSITE LIGHT VEHICLE	0329	9-06-021 A	9.06-4	3.1 & 3.2
9-06-021-00	GASOLINE FUEL UNLEADED LIGHT VEHICLE (CATALYST)	0326	9-06-021 B	9.06-5	
9-06-021-00	GASOLINE FUEL UNLEADED LIGHT VEHICLE (LEAN BURN)	0327	9-06-021 C	9.06-6	
9-06-021-00	GASOLINE FUEL LEADED LIGHT VEHICLE (NO CONTROL)	0328	9-06-021 D	9.06-7	
9-06-021-00	GASOLINE FUEL UNLEADED LIGHT VEHICLE (NO CONTROL)	0335	9-06-021 E	9.06-8	
9-06-021-00	GASOLINE FUEL COMPOSITE LIGHT VEHICLE (EVAPORATIVE)	0336	9-06-021 F	9.06-9	
9-06-021-00	GASOLINE FUEL COMPOSITE LIGHT VEHICLE (LIQUID)	0337	9-06-021 G	9.06-10	
9-06-022-00	GASOLINE FUEL COMPOSITE HEAVY VEHICLE	0329	9-06-022 A	9.06-4	
9.06-022-00	GASOLINE FUEL UNLEADED HEAVY VEHICLE (CATALYST)	0326	9-06-022 B	9.06-5	
9-06-022-00	GASOLINE FUEL UNLEADED HEAVY VEHICLE (LEAN BURN)	0327	9-06-022 C	9.06-6	
9-06-022-00	GASOLINE FUEL LEADED HEAVY VEHICLE (NO CONTROL)	0328	9-06-022 D	9.06-7	
9-06-022-00	GASOLINE FUEL UNLEADED HEAVY VEHICLE (NO CONTROL)	0335	9-06-022 E	9.06-8	
9-06-022-00	GASOLINE FUEL COMPOSITE HEAVY VEHICLE (EVAPORATIVE)	0336	9-06-022 F	9.06-9	
9-06-022-00	GASOLINE FUEL COMPOSITE HEAVY VEHICLE (LIQUID)	0337	9-06-022 G	9.06-10	

SCC SUMMARY INDEX (CONTINUED)

SCC NO.	TITLE	PROFILE KEY NO.	TABLE NO.	PAGE NO.	AP-42 SECTION
9-06-023-00	GASOLINE FUEL COMPOSITE OFF HIGHWAY	0329	9-06-023 A	9.06-4	3.1 & 3.2
9-06-023-00	GASOLINE FUEL UNLEADED OFF HIGHWAY (CATALYST)	0326	9-06-023 B	9.06-5	
9--6-023-00	GASOLINE FUEL UNLEADED OFF HIGHWAY (LEAN BURN)	0327	9-06-023 C	9.06-6	
9-06-023-00	GASOLINE FUEL LEADED OFF HIGHWAY (NO CONTROL)	0328	9-06-023 D	9.06-7	
9-06-023-00	GASOLINE FUEL UNLEADED OFF HIGHWAY (NO CONTROL)	0335	9-06-023 E	9.06-8	
9-06-023-00	GASOLINE FUEL COMPOSITE OFF HIGHWAY (EVAPORATIVE)	0336	9-06-023 F	9.06-9	
9-06-023-00	GASOLINE FUEL COMPOSITE OFF HIGHWAY (LIQUID)	0337	9-06-023 G	9.06-10	
9-07-021-00	DIESEL FUEL/LIGHT VEHICLE	0330	9-07-021	9.07-3	
9-07-022-00	DIESEL FUEL/HEAVY VEHICLE	0330	9-07-021	9.07-3	
9-07-023-00	DIESEL FUEL/OFF HIGHWAY VEHICLE	0330	9-07-021	9.07-3	
9-11-061-00	MEASURED VEHICLE MILES, LIMITED ACCESS ROADS GASOLINE FUEL COMPOSITE	0329	9-06-021 A	9.06-4	

SCC SUMMARY INDEX (CONTINUED)

SCC NO.	TITLE	PROFILE KEY NO.	TABLE NO.	PAGE NO.	AP-42 SECTION
9-11-062-00	MEASURED VEHICLE MILES RURAL ROADS GASOLINE FUEL COMPOSITE	0329	9-06-021 A	9.06-4	3.1 & 3.2
9-11-063-00	MEASURED VEHICLE MILES SUBURBAN ROADS GASOLINE FUEL COMPOSITE	0329	9-06-021 A	9.06-4	
9-11-064-00	MEASURED VEHICLE MILES URBAN ROADS GASOLINE FUEL COMPOSITE	0329	9-06-021 A	9.06-4	
9-11-061-00	MEASURED VEHICLE MILES LIMITED ACCESS ROADS FUEL COMPOSITE (GASOLIINE/DIESEL)	0325	9-11-061	9.11-3	
9-11-062-00	MEASURED VEHICLE MILES RURAL ROADS FUEL COMPOSITE (GASOLINE/DIESEL)	0325	9-11-061	9.11-3	
9-11-063=00	MEASURED VEHICLE MILES SUBURBAN ROADS FUEL COMPOSITE (GASOLINE/DIESEL)	0325	9-11-061	9.11-3	
9-11-064-00	MEASURED VEHICLE MILES URBAN ROADS FUEL COMPOSITE	0325	9-11-061	9.11-3	
9-13-081-00	MISCELLANEOUS BURNING/FOREST FIRES	0307	9-13-081	9.13-3	11.1
9-35-103-00	SOLVENT USE/ARCHITECTURAL COATINGS	0196	9-35-103	9.35-3	4.2
9-35-702-00	SOLVENT USE/DOMESTIC SOLVENTS	0197	9-35-702	9.35-7	4.2
9-35-705-98	SOLVENT USE/PESTICIDES DOMESTIC & COMMERCIAL	0076	9-35-705	9.35-11	N/A
9-47-409-99	GEOGENIC/FORESTS	0204	9-47-409	9.47-4	
9-47-411-01	GEOGENIC/PETROLEUM SEEPS	0205	9-47-411	9.47-8	
9-47-429-99	GEOGENIC/CITRUS GROVES	0199	9-47-429	9.47-12	
9-49-999-99	SOLID WASTE/LANDFILL SITE	0202	9-49-999 A	9.49-5	
9-49-999-98	SOLID WASTE/ANIMAL WASTE	0203	9-49-999 B	9.49-9	

PROFILE ALPHABETICAL INDEX

PROFILE ALPHABETICAL INDEX

DESCRIPTION	PAGE NO.	PROFILE KEY NO.	TABLE NO.
ADHESIVE (see Surface Coating)			
ANIMAL WASTE DECOMPOSITION	9.49-9	0203	9-49-999 B
ARCHITECTURAL COATINGS	9.35-3	0196	9-35-103
ASPHALT CONCRETE			
IN PLACE ROAD ASPHALT	3.05-12	0026	3-05-002 B
ROTARY DRYER, N.G. FIRED	3.05-11	0025	3-05-002 A
ASPHALT ROOFING			
BLOWING OPERATION	3.05-4	0021	3-05-001 A
DIPPING	3.05-5	0022	3-05-001 B
SPRAYING	3.05-6	0023	3-05-001 C
TAR KETTLE	3.05-7	0024	3-05-001 D
AUTOMOTIVE (See also Internal Combustion Engine)			
TIRES			
SYNTHETIC RUBBER, PRODUCTION	3.01-23	0274	3-01-026 C
TUBER ADHESIVE	3.01-21	0272	3-01-026 A
WHITE SIDEWALL TUBER ADHESIVE	3.01-22	0273	3-01-026 B
BASIC OXYGEN FURNACE (see Steel Production)			
BEER, FERMENTATION	3.02-3	0211	3-02-009

PROFILE ALPHABETICAL INDEX (CONTINUED)

DESCRIPTION	PAGE NO.	PROFILE KEY NO.	TABLE NO.
BLAST FURNACE (see Iron Production)			
BOILER			
COKE OVEN GAS	1.01-7	0005	1-02-008
DISTILLATE OIL	1.01-4	0002	1-01-005
FLUID CATALYTIC CRACKER (FCC)	3.06-4	0029	3-06-002
NATURAL GAS	1.01-5	0003	1-01-006
REFINERY GAS	1.01-6	0004	1-01-007
RESIDUAL OIL	1.01-3	0001	1-01-004
CHEMICAL MANUFACTURING			
AUTOMOBILE TIRES			
SYNTHETIC RUBBER	3.01-23	0274	3-01-026 C
TUBER ADHESIVE	3.01-21	0272	3-01-026 A
WHITE SIDEWALL ADHESIVE	3.01-22	0273	3-01-026 B
EHTYLENE DICHLORIDE			
DIRECT CHLORINATION	3.01-28	0078	3-01-125
FLARES	3.01-32	0079	3-01-999
PHTHALIC ANHYDRIDE			
CONTROLLED	3.01-13	0276	3-01-019 B
WASTE SUMP	3.01-12	0071	3-01-019 A
PLASTICS			
PROPYLENE	3.01-8	0068	3-01-018 B
PVC	3.01-7	0067	3-01-018 A

DESCRIPTION	PAGE NO.	PROFILE KEY NO.	TABLE NO.
PRINTING INK			
COOKING	3.01-17	0072	3-01-020
VARNISH MANUFACTURE			
BODYING OIL	3.01-15	0066	3-01-015
CITRUS COATING WAX (see Surface Coating)			
CITRUS GROVE EMISSIONS	9.47-12	0199	9-47-429
CLEANING SOLVENT			
DEGREASING			
DICHLOROMETHANE	4.01-11	0275	4-01-002 B
TOLUENE	4.01-13	0090	D
TRICHLOROETHANE	4.01-10	0089	A
TRICHLOROETHYLENE	4.01-12	0271	C
TRICHLOROFLUOROMETHANE	4.01-14	0088	E
TRICHLOROTRIFLUOROETHANE (Freon 113)	4.01-15	0277	F
DRY CLEANING			
PERCHLOROETHYLENE	4.01-6	0085	4-01-001 C
STODDARD SOLVENT	4.01-5	0086	B
1,1,1-TRICHLOROETHANE	4.01-4	0087	A
COATING OVEN (see Surface Coating)			

PROFILE ALPHABETICAL INDEX (CONTINUED)

DESCRIPTION	PAGE NO.	PROFILE KEY NO.	TABLE NO.
COKE MANUFACTURE			
BLAST FURNACE GAS	3.90-3	0217	3-90-007
BY PRODUCT OVEN STACK GAS	3.03-4	0011	3-03-003
COMBUSTION (see: Boiler; Internal Combustion Engine)			
COMPRESSOR SEALS (see Refinery)			
DEGREASING (see Cleaning Solvent)			
DOMESTIC SOLVENT USE (see also Surface Coating)			
ARCHITECTURAL SURFACE COATINGS	9.35-3	0196	9-35-103
DOMESTIC SOLVENTS	9.35-7	0197	9-35-702
PESTICIDES, DOMESTIC & COMMERCIAL	9.35-11	0076	9-35-705
DRY CLEANING (see Cleaning Solvent)			
DYEING (see Fabric Dyeing)			
ENAMEL (see Surface Coating)			
ETHYLENE DICHLORIDE			
DIRECT CHLORINATION	3.01-28	0078	3-01-125
FABRIC DYEING, GENERAL	3.30-2	0060	3-30-001
FIRES			
FOREST	9.13-3	0307	9-13-081
OPEN BURNING DUMP, LANDSCAPE/PRUNING	5.01-4	0121	5-01-002

PROFILE ALPHABETICAL INDEX (CONTINUED)

DESCRIPTION	PAGE NO.	PROFILE KEY NO.	TABLE NO.
FLARES			
CHEMICAL	3.01-32	0079	3-01-999
REFINERY, NATURAL GAS	3.06-41	0051	3-06-009
FLEXOGRAPHIC (see Printing Press)			
FOOD/AGRICULTURE			
FERMENTATION-BEER	3.02-3	0211	3-02-009
FORESTS			
EMISSIONS, GEOGENIC	9.47-4	0204	9-47-409
FIRES	9.13-3	0307	9-13-081
GEOGENIC EMISSIONS			
CITRUS GROVES	9.47-12	0199	9-47-429
FORESTS	9.47-4	0204	9-47-409
PETROLEUM SEEPS	9.47-8	0205	9-47-411
GRAPHIC ARTS (see Printing Press)			
GRAVURE (see Printing Press)			
INCINERATION, BAR SCREEN WASTE	5.01-8	0122	5-01-005
INTERNAL COMBUSTION ENGINE			
COMPOSITE GASOLINE/DIESEL	9.11-2	0325	9-11-061
GASOLINE			
LIGHT & HEAVY VEHICLE	9.06-4	0329	9-06-021 A

PROFILE ALPHABETICAL INDEX (CONTINUED)

DESCRIPTION	PAGE NO.	PROFILE KEY NO.	TABLE NO.
DIESEL FUEL			
RECIPROCATING	2.01-4	0008	2-01-003
LIGHT & HEAVY VEHICLE	9.07-3	0330	9-07-021
DISTILLATE OIL, RECIPROCATING	2.01-5	0009	2-02-001
NATURAL GAS, RECIPROCATING			
INDUSTRIAL	2.01-6	0010	2-02-002 A
30 HP BUDA	2.01-7	0308	2-02-002 B
NATURAL GAS TURBINE	2.01-3	0007	2-01-002
IRON PRODUCTION			
BLAST FURNACE CHARGING	3.03-8	0012	3-03-008 A
IRON SINTERING	3.03-9	0013	3-03-008 B
LETTERPRESS (see Printing Press)			
LITHOGRAPHY (see Printing Press)			
OPEN HEARTH FURNACE (see Steel Production)			
OVENS (see Surface Coating-Coating Oven)			
PAINT (see Surface Coating)			
PESTICIDES, DOMESTIC & COMMERCIAL	9.35-11	0076	9-35-705
PETROLEUM SEEPS	9.47-8	0205	9-47-411

PROFILE ALPHABETICAL INDEX (CONTINUED)

DESCRIPTION	PAGE NO.	PROFILE KEY NO.	TABLE NO.
PETROLEUM STORAGE			
FIXED ROOF TANK			
BENZENE	4.03-15	0298	4-03-001 F
CRUDE OIL, COMPOSITE, MARINE TERMINAL	4.03-26	0305	4-06-002
CRUDE OIL, COMPOSITE, PRODUCTION	4.03-12	0296	4-03-001 C
CRUDE OIL, COMPOSITE, REFINERY	4.03-13	0297	D
CRUDE OIL & WASTE WATER	4.03-24	0188	Q
CYCLOHEXANE	4.03-16	0299	G
CYCLOPENTANE	4.03-17	0300	H
GASOLINE COMPOSITE	4.03-10	0098	A
GASOLINE, FCCU & REFORMER BLEND	4.03-11	0187	B
HEPTANE	4.03-18	0301	J
HEXANE	4.03-19	0230	K
ISO-OCTANE	4.03-20	0302	L
ISO-PENTANE	4.03-21	0231	M
JET A	4.03-14	0100	E
PENTANE	4.03-22	0303	N
TOLUENE	4.03-23	0185	P
FLOATING ROOF TANK (see Fixed Roof Tank)			
VARIABLE VAPOR SPACE			
LIQUIFIED PETROLEUM GAS	4.03-25	0232	4-03-003

DESCRIPTION	PAGE NO.	PROFILE KEY NO.	TABLE NO.
PHTHALIC ANHYDRIDE			
CONTROLLED	3.01-13	0276	3-01-019 B
WASTE SUMP	3.01-12	0071	3-01-019 A
PIPE/VALVES (see Refinery)			
PLASTICS			
PROPYLENE, GENERAL	3.01-8	0068	3-01-018 B
PVC, GENERAL	3.01-8	0067	3-01-018 A
PRIMER (see Surface Coating)			
PRINTING INK, COOKING, GENERAL	3.01-17	0072	3-01-020
PRINTING PRESS			
FLEXOGRAPHIC			
ALCOHOL BASED SOLVENT, COMPOSITE	4.05-9	0172	4-05-003 A
N-PROPYL ALCOHOL	4.05-10	0304	4.05-003 B
GRAVURE			
PAPERBOARD PRINTING	4.05-19	0181	4-05-005 A
SOLVENT,			
COMMERCIAL PRINTING	4.05-21	0184	C
GENERAL PRINTING	4.05-22	0182	D
PERIODICAL PRINTING	4.05-20	0183	B
LETTERPRESS			
INKING & DRYING	4.05-4	0334	4-05-002 A
INKING PROCESS	4.05-5	0166	4-05-002 B

PROFILE ALPHABETICAL INDEX (CONTINUED)

DESCRIPTION	PAGE NO.	PROFILE KEY NO.	TABLE NO.
LITHOGRAPHY			
INKING & DRYING	4.05-14	0333	4-05-004 A
INKING & DRYING, CONTROLLED	4.05-15	0332	4-05-004 B
PUMP SEALS (see Refinery)			
REFINERY			
CATALYTIC REFORMER	3.06-43	0053	3-06-013
COMPRESSOR SEALS			
NATURAL GAS	3.06-37	0044	3-06-008 Y
REFINERY GAS	3.06-38	0039	3-06-008 Z
COOLING TOWERS	3.06-10	0035	3-06-007
DRAINAGE/SEPARATION PITS	3.06-7	0031	3-06-005
FCC BOILER	3.06-4	0029	3-06-002
FLARES, NATURAL GAS	3.06-41	0051	3-06-009
PIPE/VALVE FLANGES			
COMPOSITE	3.06-13	0316	3-06-008 A
DISTILLATE	3.06-18	0318	3-06-008 F
GASOLINE	3.06-14	0317	B
GASOLINE, CRACKED	3.06-15	0319	C
GAS-OIL STOCK	3.06-16	0322	D
GAS PLANT	3.06-23	0036	L
NAPHTHA	3.06-19	0320	G
NATURAL GAS	3.06-21	0323	J

PROFILE ALPHABETICAL INDEX (CONTINUED)

DESCRIPTION	PAGE NO.	PROFILE KEY NO.	TABLE NO.
NATURAL GAS, WET & DRY	3.06-22	0041	3-06-008 K
REFINERY GAS	3.06-20	0324	H
REFORMATE STOCK	3.06-17	0309	E
PUMP SEALS			
COMPOSITE	3.06-28	0321	3-06-008 P
DISTILLATE	3.06-33	0311	U
GASOLINE	3.06-36	0038	X
GASOLINE, CRACKED	3.06-30	0310	R
GASOLINE, NATURAL	3.06-35	0043	W
GASOLINE, STRAIGHT RUN	3.06-29	0312	Q
GAS-OIL STOCK	3.06-31	0313	S
NAPHTHA	3.06-34	0315	V
REFORMATE STOCK	3.06-32	0314	T
RELIEF VALVES, LPG	3.06-25	0047	N
TRAPS, WET NATURAL GAS COMPOSITE	3.06-24	0042	M
RESIDENTIAL FUEL			
NATURAL GAS	9.01-3	0195	9-01-005
SHELLAC (see Surface Coating)			
SINTERING (see Iron Production)			
SOLID WASTE			
ANIMAL WASTE DECOMPOSITION	9.49-9	0203	9-49-999 B
INCINERATOR, BAR SCREEN WASTE	5.01-8	0122	5-01-005

PROFILE ALPHABETICAL INDEX (CONTINUED)

DESCRIPTION	PAGE NO.	PROFILE KEY NO.	TABLE NO.
LANDFILL SITE, CLASS II	9.49-5	0202	9-49-999 A
OPEN BURNING DUMP, LANDSCAPE/PRUNING	5.01-4	0121	5-01-002
SOLVENT STORAGE (see: Surface Coating; Petroleum Storage; Cleaning Solvents)			
SOLVENT USE (see also Surface Coating)			
DOMESTIC SOLVENTS, GENERAL	9.35-7	0197	9-35-702
PESTICIDES, DOMESTIC & COMMERCIAL	9.35-11	0076	9-35-705
STEEL PRODUCTION			
BASIC OXYGEN FURNACE	3.03-15	0016	3-03-009 C
OPEN HEARTH W/OXYGEN LANCE	3.03-13	0306	3-03-009 A
OPEN HEARTH W/OXYGEN LANCE, CONTROLLED	3.03-14	0014	3-03-009 B
SURFACE COATING			
ADHESIVE			
AUTOMOTIVE VINYL TOP, SPRAY BOOTH	4.02-37	0285	4-02-007 C
BENZENE	4.02-39	0287	F
FOSTER BOND SEAL NO. 107	4.02-38	0145	E
LABEL	4.02-35	0141	A
METAL FURNITURE	4.02-36	0142	B
ARCHITECTURAL COATINGS	9.35-3	0196	9-35-103

DESCRIPTION	PAGE NO.	PROFILE KEY NO.	TABLE NO.
CITRUS COATING WAX			
BROGDEX 502	4.02-40	0293	4-02-999 A
FLAVORSEAL 115-1800	4.02-42	0295	4-02-999 C
FLAVORSEAL 320-1820	4.02-41	0294	4-02-999 B
COATING OVEN			
AUTOMOTIVE			
ENAMEL	4.02-51	0162	4-02-008 E
LACQUER	4.02-52	0154	4-02-008 F
PRIMER	4.02-48	0279	4-02-008 B
VINYL TOP ADHESIVE	4.02-50	0286	4-02-008 D
METAL PARTS, GENERAL	4.02-47	0092	4-02-008 A
ZINC CHROMATE, INFRARED DRYER	4.02-49	0056	4-02-008 C
ENAMEL			
AIRCRAFT INDUSTRY	4.02-23	0164	4-02-005 D
CELLOSOLVE ACETATE	4.02-24	0222	E
GENERAL, COMPOSITE	4.02-20	0156	A
POLYESTER, MODIFIED ACRYLIC	4.02-21	0159	B
WOOD FURNITURE COMPOSITE	4.02-22	0157	C
LACQUER			
AIRCRAFT COATING	4.02-17	0155	4-02-004 D
AIRCRAFT PARTS	4.02-18	0146	E

PROFILE ALPHABETICAL INDEX (CONTINUED)

DESCRIPTION	PAGE NO.	PROFILE KEY NO.	TABLE NO.
LXB-472-E SEMIGLOSS TOP COAT	4.02-16	0147	4-02-004 C
METAL FURNITURE	4.02-15	0148	B
PAPER PRODUCTS	4.02-14	0149	A
PLASTIC COATING	4.02-19	0150	G
PAINT			
POLYMERIC, HOT AIR DRIED	4.02-5	0125	4-02-001 A
SOLVENT			
ACETONE	4.02-6	0219	B
ETHYL ACETATE	4.02-7	0220	C
METHYL ETHYL KETONE	4.02-8	0221	D
PRIMER			
AUTOMOTIVE, WATER BASED SPRAY BOOTH	4.02-29	0280	4-02-006 E
GENERAL	4.02-25	0134	A
KOPPERS, A-1131-66, BLACK	4.02-32	0281	F
KOPPERS, P-470-A-66, RED OXIDE	4.02-30	0331	D
METAL FURNITURE	4.02-27	0136	C
PAPERBOARD PRODUCTS	4.02-26	0137	B
SHELL M-75	4.02-34	0284	K
SOLVENT			
MINERAL SPIRITS	4.02-32	0283	H
MINERAL SPIRITS, SPECIATION	4.02-33	0225	J
NAPHTHA	4.02-31	0282	G

PROFILE ALPHABETICAL INDEX (CONTINUED)

DESCRIPTION	PAGE NO.	PROFILE KEY NO.	TABLE NO.
SOLVENT			
BUTYL ACETATE	4.02-57	0288	4-02-009 B
BUTYL ALCOHOL	4.02-58	0289	C
CELLOSOLVE	4.02-59	0290	D
DIMETHYL FORMAMIDE	4.02-60	0292	E
ETHYL ALCOHOL	4.02-61	0226	F
GENERAL	4.02-56	0096	A
ISOPROPYL ACETATE	4.02-63	0228	H
ISOPROPYL ALCOHOL	4.02-62	0227	G
LACTOL SPIRITS	4.02-64	0229	J
METHYL ALCOHOL	4.02-65	0291	K
VARNISH MANUFACTURE, BODYING OIL	3.01-15	0066	3-01-015
VARNISH/SHELLAC			
AIR CONVERTING VARNISH, LXH-221	4.02-11	0278	4-02-003 C
BROLITE MIL-V-173B	4.02-12	0133	D
GENERAL	4.02-9	0127	A
RESIN, VARNISH	4.02-10	0132	B
SOLVENT			
XYLENE	4.02-13	0223	E
SYNTHETIC RUBBER			
AUTO TIRE PRODUCTION	3.01-23	0274	3-01-026 C
VARNISH (see Surface Coating)			

1-01 EXTERNAL COMBUSTION BOILERS

1-01 EXTERNAL COMBUSTION BOILERS--RESIDUAL OIL
--DISTILLATE OIL
--NATURAL GAS
--REFINERY GAS
--COKE OVEN GAS

Process Description[1]

External combustion sources include utility, industrial, commercial and institutional boilers; commercial and domestic combustion units; process heaters, furnaces, kilns, etc. Coal, oil and natural gas are the major fossil fuels used by these sources.

Emissions[2,3]

As a rule, very small concentrations of hydrocarbons will be produced during coal, oil and gas combustion. If a unit is operated improperly or not maintained, as is the case with small, often unattended units, then the resulting concentrations of these pollutants may increase by several orders of magnitude.

Emission factors for various types of fossil fuels and boiler sizes will be found in Sections 1.3, 1.4 and 1.5 of the EPA document AP-42 (Ref. 3).

Controls

The normal procedure followed in controlling unburned or partially burned hydrocarbon pollutants is to increase the combustion efficiency of the unit rather than treatment at the exhaust stack. Because of the low concentrations of VOC found in the exhaust gas of a properly tuned device control equipment is generally not necessary or practical.

Profile Basis[2]

Flue gas samples were taken from the exhaust stacks of external combustion boilers burning different fossil fuels using the portable sampling train and procedure described in Appendix 2. Most tests involved taking one sample, however, on selected sources two independent trains were used to provide duplicate field samples. All organic species contributing at least 1% of the total organic composition are identified in the external combustion profiles.

Data Qualification

Although only one test was performed for each of the fuels described in the following profiles, the test locations were carefully selected on the basis of the representative nature of their emissions to all other devices of that particular type and fuel. As a result, these profiles should be applicable to other non-tested sources as indicated by the applicable SCC categories listed in the notes for each profile.

DECEMBER 14, 1978 TABLE 1-01-004 EXTERNAL COMBUSTION BOILER
RESIDUAL OIL
DATA CONFIDENCE LEVEL: II

CONTROL DEVICE: NONE
PROCESS MODIFICATION: NONE
KVB PROFILE KEY 0001

LINE NO.	SARGAD CODE	CHEMICAL NAME	MOLECULAR WEIGHT	PERCENT WEIGHT	PERCENT VOLUME	CHEMICAL CLASSIFICATION
1	43212	N-BUTANE	58.12	14.00	8.41	1 PARAFFIN
2	43231	N-HEXANE	86.17	5.00	2.02	1 PARAFFIN
3	43502	FORMALDEHYDE	30.03	42.00	48.81	4 CARBONYL
4	43551	ACETONE	58.08	28.00	16.82	4 CARBONYL
5	43201	METHANE	16.04	11.00	23.94	6 METHANE
		TOTAL		100.00	100.00	
	2	COMPOUNDS OF CLASSIFICATION 1	63.55	19.00	10.43	
	0	COMPOUNDS OF CLASSIFICATION 2	.00	.00	.00	
	0	COMPOUNDS OF CLASSIFICATION 3	.00	.00	.00	
	2	COMPOUNDS OF CLASSIFICATION 4	37.22	70.00	65.63	
	0	COMPOUNDS OF CLASSIFICATION 5	.00	.00	.00	
	1	COMPOUNDS OF CLASSIFICATION 6	16.04	11.00	23.94	
	0	COMPOUNDS OF CLASSIFICATION 7	.00	.00	.00	
	5	COMPOUND COMPOSITE	34.90	100.00	100.00	

NOTES: A. METHOD: CALCULATIONS FROM COMPOSITE SURVEY DATA GC-MS ANALYSIS OF SAMPLING TRAIN CATCH
B. REFERENCES: KVB TEST DATA, AP-42 SECTION 1.3
C. APPLICABLE SCC CATEGORIES: 1-01-004-01,-02,-03 (REFER ALSO TO SUMMARY INDEX)

DECEMBER 14, 1978 TABLE 1-01-005 EXTERNAL COMBUSTION BOILER
DISTILLATE OIL
DATA CONFIDENCE LEVEL: II

CONTROL DEVICE: NONE
PROCESS MODIFICATION: NONE
KVB PROFILE KEY 0002

LINE NO.	SAROAD CODE	CHEMICAL NAME	MOLECULAR WEIGHT	PERCENT WEIGHT	PERCENT VOLUME	CHEMICAL CLASSIFICATION	
1	43105	ISOMERS OF HEXANE	86.17	5.20	2.58	1	PARAFFIN
2	43106	ISOMERS OF HEPTANE	100.20	2.60	1.12	1	PARAFFIN
3	43107	ISOMERS OF OCTANE	114.23	4.70	1.76	1	PARAFFIN
4	43122	ISOMERS OF PENTANE	72.15	5.50	3.27	1	PARAFFIN
5	43204	PROPANE	44.09	1.20	1.16	1	PARAFFIN
6	43212	N-BUTANE	58.12	12.20	9.03	1	PARAFFIN
7	43214	ISOBUTANE	58.12	4.10	3.05	1	PARAFFIN
8	43220	N-PENTANE	72.15	4.70	2.79	1	PARAFFIN
9	43231	N-HEXANE	86.17	10.80	5.37	1	PARAFFIN
10	43232	N-HEPTANE	100.20	.30	.13	1	PARAFFIN
11	43502	FORMALDEHYDE	30.03	48.70	69.73	4	CARBONYL
		TOTAL		100.00	99.99		
	10	COMPOUNDS OF CLASSIFICATION 1	72.76	51.30	30.26		
	0	COMPOUNDS OF CLASSIFICATION 2	.00	.00	.00		
	0	COMPOUNDS OF CLASSIFICATION 3	.00	.00	.00		
	1	COMPOUNDS OF CLASSIFICATION 4	30.03	48.70	69.73		
	0	COMPOUNDS OF CLASSIFICATION 5	.00	.00	.00		
	0	COMPOUNDS OF CLASSIFICATION 6	.00	.00	.00		
	0	COMPOUNDS OF CLASSIFICATION 7	.00	.00	.00		
	11	COMPOUND COMPOSITE	42.96	100.00	99.99		

NOTES: A. METHOD: CALCULATIONS FROM COMPOSITE SURVEY DATA GC-MS ANALYSIS OF SAMPLING TRAIN CATCH
B. REFERENCES: KVB TEST DATA, AP-42 SECTION 1.3
C. APPLICABLE SCC CATEGORIES: 1-01-005-01, -02, -03 (REFER ALSO TO SUMMARY INDEX)

DECEMBER 14, 1978 TABLE 1-01-006 EXTERNAL COMBUSTION BOILER
NATURAL GAS
DATA CONFIDENCE LEVEL: II

CONTROL DEVICE: NONE
PROCESS MODIFICATION: NONE
KVB PROFILE KEY 0003

LINE NO.	SAROAD CODE	CHEMICAL NAME	MOLECULAR WEIGHT	PERCENT WEIGHT	PERCENT VOLUME	CHEMICAL CLASSIFICATION	
1	43105	ISOMERS OF HEXANE	86.17	1.00	.28	1	PARAFFIN
2	43122	ISOMERS OF PENTANE	72.15	9.00	2.90	1	PARAFFIN
3	43204	PROPANE	44.09	4.00	2.11	1	PARAFFIN
4	43212	N-BUTANE	58.12	9.00	3.60	1	PARAFFIN
5	43220	N-PENTANE	72.15	6.00	1.93	1	PARAFFIN
6	43248	CYCLOHEXANE	84.16	1.00	.28	1	PARAFFIN
7	45202	TOLUENE	92.13	2.00	.51	3	AROMATIC
8	43502	FORMALDEHYDE	30.03	8.00	6.17	4	CARBONYL
9	43201	METHANE	16.04	56.00	81.04	6	METHANE
10	45201	BENZENE	78.11	4.00	1.18	7	NON-REACTIVE
		TOTAL		100.00	100.00		
	6	COMPOUNDS OF CLASSIFICATION 1	62.92	30.00	11.10		
	0	COMPOUNDS OF CLASSIFICATION 2	.00	.00	.00		
	1	COMPOUNDS OF CLASSIFICATION 3	92.13	2.00	.51		
	1	COMPOUNDS OF CLASSIFICATION 4	30.03	8.00	6.17		
	0	COMPOUNDS OF CLASSIFICATION 5	.00	.00	.00		
	1	COMPOUNDS OF CLASSIFICATION 6	16.04	56.00	81.04		
	1	COMPOUNDS OF CLASSIFICATION 7	78.11	4.00	1.18		
	10	COMPOUND COMPOSITE	23.23	100.00	100.00		

NOTES: A. METHOD: CALCULATIONS FROM COMPOSITE SURVEY DATA GC-MS ANALYSIS OF SAMPLING TRAIN CATCH
B. REFERENCES: KVB TEST DATA, AP-42 SECTION 1.4
C. APPLICABLE SCC CATEGORIES: 1-01-006-01, -02, -03 (REFER ALSO TO SUMMARY INDEX)

DECEMBER 14, 1978 TABLE 1-01-007

EXTERNAL COMBUSTION BOILER
REFINERY GAS
DATA CONFIDENCE LEVEL: III

CONTROL DEVICE: NONE
PROCESS MODIFICATION: NONE
KVB PROFILE KEY 0004

LINE NO.	SAROAD CODE	CHEMICAL NAME	MOLECULAR WEIGHT	PERCENT WEIGHT	PERCENT VOLUME	CHEMICAL CLASSIFICATION	
1	43204	PROPANE	44.09	18.90	15.65	1	PARAFFIN
2	43212	N-BUTANE	58.12	23.10	14.52	1	PARAFFIN
3	43214	ISOBUTANE	58.12	4.40	2.77	1	PARAFFIN
4	43205	PROPYLENE	42.08	17.50	15.18	2	OLEFIN
5	43502	FORMALDEHYDE	30.03	7.60	9.23	4	CARBONYL
6	43201	METHANE	16.04	7.60	17.29	6	METHANE
7	43202	ETHANE	30.07	20.90	25.36	7	NON-REACTIVE
		TOTAL		100.00	100.00		
	3	COMPOUNDS OF CLASSIFICATION 1	51.45	46.40	32.94		
	1	COMPOUNDS OF CLASSIFICATION 2	42.08	17.50	15.18		
	0	COMPOUNDS OF CLASSIFICATION 3	.00	.00	.00		
	1	COMPOUNDS OF CLASSIFICATION 4	30.03	7.60	9.23		
	0	COMPOUNDS OF CLASSIFICATION 5	.00	.00	.00		
	1	COMPOUNDS OF CLASSIFICATION 6	16.04	7.60	17.29		
	1	COMPOUNDS OF CLASSIFICATION 7	30.07	20.90	25.36		
	7	COMPOUND COMPOSITE	36.51	100.00	100.00		

NOTES: A. METHOD: CALCULATIONS FROM COMPOSITE SURVEY DATA GC-MS ANALYSIS OF SAMPLING TRAIN CATCH
B. REFERENCES: KVB TEST DATA, AP-42 SECTION NONE
C. APPLICABLE SCC CATEGORIES: 1-01-007-01, -02, 1-02-007-01, -02, -03

DECEMBER 14, 1978 TABLE 1-02-008 EXTERNAL COMBUSTION BOILER
COKE OVEN GAS
DATA CONFIDENCE LEVEL: II

CONTROL DEVICE: NONE
PROCESS MODIFICATION: NONE
KVB PROFILE KEY 0005

LINE NO.	SAROAD CODE	CHEMICAL NAME	MOLECULAR WEIGHT	PERCENT WEIGHT	PERCENT VOLUME	CHEMICAL CLASSIFICATION	
1	43203	ETHYLENE	28.05	11.70	7.29	2	OLEFIN
2	43205	PROPYLENE	42.08	.30	.12	2	OLEFIN
3	43206	ACETYLENE	26.04	.80	.54	5	MISCELLANEOUS
4	43201	METHANE	16.04	82.80	90.18	6	METHANE
5	43202	ETHANE	30.07	2.50	1.45	7	NON-REACTIVE
6	45201	BENZENE	78.11	1.90	.42	7	NON-REACTIVE
		TOTAL		100.00	100.00		
	0	COMPOUNDS OF CLASSIFICATION 1	.00	.00	.00		
	2	COMPOUNDS OF CLASSIFICATION 2	28.28	12.00	7.41		
	0	COMPOUNDS OF CLASSIFICATION 3	.00	.00	.00		
	0	COMPOUNDS OF CLASSIFICATION 4	.00	00	.00		
	1	COMPOUNDS OF CLASSIFICATION 5	26.04	.80	.54		
	1	COMPOUNDS OF CLASSIFICATION 6	16.04	82.80	90.18		
	2	COMPOUNDS OF CLASSIFICATION 7	40.86	4.40	1.87		
	6	COMPOUND COMPOSITE	17.46	100.00	100.00		

NOTES: A. METHOD: CALCULATIONS FROM COMPOSITE SURVEY DATA QC-MS ANALYSIS OF SAMPLING TRAIN CATCH
B. REFERENCES: KVB TEST DATA, AP-42 SECTION NONE
C. APPLICABLE SCC CATEGORIES: 1-02-008-02, 3-90-007-02, 3-90-008-01,-99

REFERENCES

1. Formica, P. N., "Controlled and Uncontrolled Emission Rates and Applicable Limitations for Eighty Processes," prepared for the Environmental Protection Agency, Durham, NC, EPA-340/1-78-004, April 1978.

2. Taback, H. J., et al., "Control of Hydrocarbon Emissions from Stationary Sources in the California South Coast Air Basin," Vol. I & II, KVB, Inc., Tustin, CA, June 1978.

3. "Compilation of Air Pollutant Emission Factors," Environmental Protection Agency, Research Trinagle Park, NC, AP-42, August 1977.

2-01 INTERNAL COMBUSTION ENGINES

2-01 INTERNAL COMBUSTION ENGINES, STATIONARY SOURCES

Process Description[1]

Engines included in this category are internal combustion (IC) engines used in applications similar to those associated with external combustion sources. The major engines in this category are gas turbines and large, heavy duty, general utility reciprocating engines. Stationary internal combustion engines find applications in electrical power generators, in gas pipeline pump and compressor drives and in various process industries. The majority of gas turbines are used in electrical generation for continuous, peaking or stand-by power. The primary fuels used are natural gas and No. 2 (distillate) fuel oil, although residual oil is used in a few applications.

Emissions[1,2]

The organic emission factor data presented in Section 3.3, "Off-Highway, Stationary Sources" in AP-42 (Ref. 1) are for very large stationary engines in the 800 hp category which are much larger than those typically found in the California South Coast Air Basin. The results of tests conducted by KVB, Inc. on IC engines also resulted in large emission rates (Ref. 2), however, insufficient data were obtained to generalize an emission factor for these engines. The AP-42 values appear reasonable, although it should be recognized that emission rates for the smaller IC engines may be much greater.

Controls[2]

Although stationary IC engines are a significant source of organic emissions, control equipment to reduce these emissions is not yet required. Hydrocarbon emissions from IC engines can be reduced by: (a) improved operating practice, (b) proper maintenance, (c) improved equipment design, (d) fuel substitution, and (e) add-on devices such as catalytic converters.

Profile Basis

Field test samples of fuel combustion exhaust from IC engines burning different fuels were taken using the portable sampling train and procedures described in Appendix 2. Profile 2-02-002A was determined from one test on a natural gas burning IC engine driving a compressor at a refinery. Flue gas flow rate was 1679 SCFM and gas temperature was 660 °F. Profile 2-02-002B is a composite of four tests on separate well pump engines at an oil field. These were six cylinder, four cycle, 30 hp, Buda engines operating on natural gas.

Engineering evaluation of literature data was used to develop profiles 2-01-003, diesel fuel turbine and 2-02-001, distillate oil reciprocating engine (Ref. 3).

Data Qualification

The source tests and literature data used were carefully selected on the basis of the representative nature of their emissions to other devices of that particular type and fuel. Therefore, the following profiles for IC engines may be correctly applied to other sources as evidenced by the applicable SCC categories listed in the notes for each profile.

DECEMBER 14, 1978 TABLE 2-01-002 INTERNAL COMBUSTINE ENGINE, ELECTRICAL GENERATION
NATURAL GAS TURBINE
DATA CONFIDENCE LEVEL: III

CONTROL DEVICE: NONE
PROCESS MODIFICATION: NONE
KVB PROFILE KEY 0007

LINE NO.	SAROAD CODE	CHEMICAL NAME	MOLECULAR WEIGHT	PERCENT WEIGHT	PERCENT VOLUME	CHEMICAL CLASSIFICATION
1	43502	FORMALDEHYDE	30.03	30.00	18.63	4 CARBONYL
2	43201	METHANE	16.04	70.00	81.37	6 METHANE
		TOTAL		100.00	100.00	
	0	COMPOUNDS OF CLASSIFICATION 1	.00	.00	.00	
	0	COMPOUNDS OF CLASSIFICATION 2	.00	.00	.00	
	0	COMPOUNDS OF CLASSIFICATION 3	.00	.00	.00	
	1	COMPOUNDS OF CLASSIFICATION 4	30.03	30.00	18.63	
	0	COMPOUNDS OF CLASSIFICATION 5	.00	.00	.00	
	1	COMPOUNDS OF CLASSIFICATION 6	16.04	70.00	81.37	
	0	COMPOUNDS OF CLASSIFICATION 7	.00	.00	.00	
	2	COMPOUND COMPOSITE	18.65	100.00	100.00	

NOTES: A. METHOD: CALCULATIONS FROM COMPOSITE SURVEY DATA GC-MS ANALYSIS OF SAMPLING TRAIN CATCH
B. REFERENCES: KVB TEST DATA, AP-42 SECTION 3.3
C. APPLICABLE SCC CATEGORIES: 2-01-002-01, 2-02-002-01

DECEMBER 14, 1978 TABLE 2-01-003 INTERNAL COMBUSTION ENGINE, ELECTRICAL GENERATION
DIESEL FUEL, RECIPROCATING
DATA CONFIDENCE LEVEL: III

CONTROL DEVICE: NONE
PROCESS MODIFICATION: NONE
KVB PROFILE KEY 0008

LINE NO.	SAROAD CODE	CHEMICAL NAME	MOLECULAR WEIGHT	PERCENT WEIGHT	PERCENT VOLUME	CHEMICAL CLASSIFICATION	
1	43203	ETHYLENE	28.05	28.70	32.45	2	OLEFIN
2	43205	PROPYLENE	42.08	17.30	13.04	2	OLEFIN
3	43213	BUTENE	56.10	13.40	7.58	2	OLEFIN
4	43218	1,3-BUTADIENE	54.09	7.00	4.09	2	OLEFIN
5	43206	ACETYLENE	26.04	11.30	13.76	5	MISCELLANEOUS
6	43201	METHANE	16.04	11.60	22.93	6	METHANE
7	43202	ETHANE	30.07	2.80	2.95	7	NON-REACTIVE
8	45201	BENZENE	78.11	7.90	3.20	7	NON-REACTIVE
		TOTAL		100.00	100.00		
	0	COMPOUNDS OF CLASSIFICATION 1	.00	.00	.00		
	4	COMPOUNDS OF CLASSIFICATION 2	36.83	66.40	57.16		
	0	COMPOUNDS OF CLASSIFICATION 3	.00	.00	.00		
	0	COMPOUNDS OF CLASSIFICATION 4	.00	.00	.00		
	1	COMPOUNDS OF CLASSIFICATION 5	26.04	11.30	13.76		
	1	COMPOUNDS OF CLASSIFICATION 6	16.04	11.60	22.93		
	2	COMPOUNDS OF CLASSIFICATION 7	55.07	10.70	6.15		
	8	COMPOUND COMPOSITE	31.70	100.00	100.00		

NOTES: A. METHOD: CALCULATIONS FROM COMPOSITE SURVEY DATA LITERATURE DATA
B. REFERENCES: T.W. SONNICHSEN, KVB ENGINEER, AP-42 SECTION 3.3
C. APPLICABLE SCC CATEGORIES: 2-01-003-01, 2-02-004-01

DECEMBER 14, 1978 TABLE 2-02-001 INTERNAL COMBUSTION ENGINE, INDUSTRIAL
DISTILLATE OIL, RECIPROCATING
DATA CONFIDENCE LEVEL: IV

CONTROL DEVICE: NONE
PROCESS MODIFICATION: NONE
KVB PROFILE KEY 0009

LINE NO.	SAROAD CODE	CHEMICAL NAME	MOLECULAR WEIGHT	PERCENT WEIGHT	PERCENT VOLUME	CHEMICAL CLASSIFICATION	
1	43203	ETHYLENE	28.05	28.70	32.45	2	OLEFIN
2	43205	PROPYLENE	42.08	17.30	13.04	2	OLEFIN
3	43213	BUTENE	56.10	13.40	7.58	2	OLEFIN
4	43218	1,3-BUTADIENE	54.09	7.00	4.09	2	OLEFIN
5	43206	ACETYLENE	26.04	11.30	13.76	5	MISCELLANEOUS
6	43201	METHANE	16.04	11.60	22.93	6	METHANE
7	43202	ETHANE	30.07	2.80	2.95	7	NON-REACTIVE
8	45201	BENZENE	78.11	7.90	3.20	7	NON-REACTIVE
		TOTAL		100.00	100.00		
	0	COMPOUNDS OF CLASSIFICATION 1	.00	.00	.00		
	4	COMPOUNDS OF CLASSIFICATION 2	36.83	66.40	57.16		
	0	COMPOUNDS OF CLASSIFICATION 3	.00	.00	.00		
	0	COMPOUNDS OF CLASSIFICATION 4	.00	.00	.00		
	1	COMPOUNDS OF CLASSIFICATION 5	26.04	11.30	13.76		
	1	COMPOUNDS OF CLASSIFICATION 6	16.04	11.60	22.93		
	2	COMPOUNDS OF CLASSIFICATION 7	55.07	10.70	6.15		
	8	COMPOUND COMPOSITE	31.70	100.00	100.00		

NOTES: A. METHOD: CALCULATIONS FROM COMPOSITE SURVEY DATA LITERATURE DATA
B. REFERENCES: T.W. SONNICHSEN, KVB ENGINEER, AP-42 SECTION 3.3
C. APPLICABLE SCC CATEGORIES: 2-02-001-02

DECEMBER 14, 1978 TABLE 2-02-002 A INTERNAL COMBUSTION ENGINE, INDUSTRIAL
NATURAL GAS, RECIPROCATING
DATA CONFIDENCE LEVEL: III

CONTROL DEVICE: NONE
PROCESS MODIFICATION: NONE
KVB PROFILE KEY 0010

LINE NO.	SAROAD CODE	CHEMICAL NAME	MOLECULAR WEIGHT	PERCENT WEIGHT	PERCENT VOLUME	CHEMICAL CLASSIFICATION	
1	43204	PROPANE	44.09	10.00	4.20	1	PARAFFIN
2	43212	N-BUTANE	58.12	1.00	.31	1	PARAFFIN
3	43214	ISOBUTANE	58.12	1.00	.31	1	PARAFFIN
4	43203	ETHYLENE	28.05	1.00	.67	2	OLEFIN
5	43502	FORMALDEHYDE	30.03	1.00	.61	4	CARBONYL
6	43201	METHANE	16.04	76.00	87.72	6	METHANE
7	43202	ETHANE	30.07	10.00	6.17	7	NON-REACTIVE
		TOTAL		100.00	99.99		
	3	COMPOUNDS OF CLASSIFICATION 1	45.89	12.00	4.82		
	1	COMPOUNDS OF CLASSIFICATION 2	28.05	1.00	.67		
	0	COMPOUNDS OF CLASSIFICATION 3	.00	.00	.00		
	1	COMPOUNDS OF CLASSIFICATION 4	30.03	1.00	.61		
	0	COMPOUNDS OF CLASSIFICATION 5	.00	.00	.00		
	1	COMPOUNDS OF CLASSIFICATION 6	16.04	76.00	87.72		
	1	COMPOUNDS OF CLASSIFICATION 7	30.07	10.00	6.17		
	7	COMPOUND COMPOSITE	18.51	100.00	99.99		

NOTES: A. METHOD: CALCULATIONS FROM COMPOSITE SURVEY DATA GC-MS ANALYSIS OF SAMPLING TRAIN CATCH
B. REFERENCES: KVB TEST DATA, AP-42 SECTION 3.3
C. APPLICABLE SCC CATEGORIES: 2-02-002-02

DECEMBER 14, 1978 TABLE 2-02-002B INTERNAL COMBUSTION ENGINE, INDUSTRIAL, COMPOSITE
NATURAL GAS, RECIPROCATING, 30 HP, 4 CYCLE, 6 CYL., BUDA
DATA CONFIDENCE LEVEL: II

CONTROL DEVICE: NONE
PROCESS MODIFICATION: NONE
KVB PROFILE KEY 0308

LINE NO.	SAROAD CODE	CHEMICAL NAME	MOLECULAR WEIGHT	PERCENT WEIGHT	PERCENT VOLUME	CHEMICAL CLASSIFICATION	
1	43204	PROPANE	44.09	.40	.15	1	PARAFFIN
2	43203	ETHYLENE	28.05	2.50	1.47	2	OLEFIN
3	43205	PROPYLENE	42.08	.10	.03	2	OLEFIN
4	43206	ACETYLENE	26.04	.90	.58	5	MISCELLANEOUS
5	43201	METHANE	16.04	93.50	96.33	6	METHANE
6	43202	ETHANE	30.07	2.60	1.44	7	NON-REACTIVE
		TOTAL		100.00	100.00		
	1	COMPOUNDS OF CLASSIFICATION 1	44.09	.40	.15		
	2	COMPOUNDS OF CLASSIFICATION 2	28.33	2.60	1.50		
	0	COMPOUNDS OF CLASSIFICATION 3	.00	.00	.00		
	0	COMPOUNDS OF CLASSIFICATION 4	.00	.00	.00		
	1	COMPOUNDS OF CLASSIFICATION 5	26.04	.90	.58		
	1	COMPOUNDS OF CLASSIFICATION 6	16.04	93.50	96.33		
	1	COMPOUNDS OF CLASSIFICATION 7	30.07	2.60	1.44		
	6	COMPOUND COMPOSITE	16.53	100.00	100.00		

NOTES: A. METHOD: CALCULATIONS FROM COMPOSITE SURVEY DATA GC-MS ANALYSIS OF MULTIPLE SAMPLING TRAINS WITH STACK EXTENSION
B. REFERENCES: KVB TEST DATA (REF. 2)
C. APPLICABLE SCC CATEGORIES: 2-02-002-02

REFERENCES

1. "Compilation of Air Pollutant Emission Factors," Environmental Protection Agency, Research Triangle Park, NC, AP-42, August 1977.

2. Taback, H. J., et al., "Control of Hydrocarbons from Stationary Sources in the California South Coast Air Basin, Vol. I and II, KVB, Inc., June 1978.

3. Sonnichsen, T. W., KVB Engineer.

INDUSTRIAL PROCESSES

3-01 CHEMICAL MANUFACTURING

3-02 FOOD/AGRICULTURE

3-03 PRIMARY METALS

3-05 MINERAL PRODUCTS

3-06 PETROLEUM INDUSTRY

3-30 TEXTILE MANUFACTURING

3-90 IN-PROCESS FUEL

3-01 INDUSTRIAL PROCESS, CHEMICAL MANUFACTURING

3-01-015 VARNISH--BODYING OIL, GENERAL

Process Description[1,2]

Varnish is a clear coating produced by chemical reactions at elevated temperatures. Varnish is generally defined as an unpigmented coating consisting of resins, oils, thinners, and dryers which forms a film by evaporation of the solvents and by oxidation and polymerization of the remaining constituents. The two basic types of varnish are spirit varnishes and oleoresinous varnishes.

The cooking process is the most important step in any varnish-making operation. Varnish is cooked in open or enclosed gas-fired kettles for periods of 4 to 16 hours at temperatures of 200 to 650 °F (93 to 340 °C) depending upon the particular batch being processed. The average plant produces 280 tons of varnish per year. For further process details, consult AP-40 (Ref. 2).

Emissions[1,2]

The cooking and thinning operations are the major sources of hydrocarbon emissions in the varnish manufacturing process. The average batch starts to release vapors at about 350 °F (177 °C) and reaches its maximum rate of release at approximately the same time the maximum cooking temperature is reached. Obviously, the open kettle allows the vaporized material to be emitted to the atmosphere more than the closed kettle operation. The addition of solvents and thinners during the cooking process also results in the emissions of hydrocarbons to the atmosphere, especially if the thinning process is carried out in open tanks.

The quantity, composition and rate of emissions depend upon:

- ingredients in the cooker
- maximum kettle temperature level
- method of blending in additives
- degree of stirring
- cooking time, and
- extent of air or inert gas blowing

The average uncontrolled and controlled hydrocarbon emissions for varnish manufacturing are shown below.

TABLE OF HYDROCARBON EMISSIONS FROM VARNISH MANUFACTURING

Type of Operation and Control	% Control	Hydrocarbon Emissions (Based on 280 Tons/Yr) lb/ton	kg/mt	lb/hr	kg/hr
Mixing and cooking, uncontrolled	0	370	185	11.8	5.35
Mixing and cooking, with incinerator	99	3.7	1.85	.12	0.05

Ref. 1

Profile 3-01-015 presents an estimation of the volatile organic species emitted from a varnish manufacturing process.

Controls[1]

The varnish industry controls emissions mainly for economic reasons. Equipment used by the industry to reduce process emissions include scrubbers, absorbers, adsorbers, and afterburners. Sublimation and solvent reformulation are also practiced. Incineration of organic gases is one certain method for elimination of organic compounds and their associated odors. Catalytic oxidation has also been used with some success in controlling hydrocarbon emissions from varnish-making operations. Consult AP-40 for specific information on control equipment and procedures (Ref. 2).

Profile Basis[3,4]

Data contained within Profile 3-01-015 were developed from engineering evaluation of survey data provided in Reference 3.

Data Qualification

The previously mentioned emission factors may be used to estimate the volatile organic emissions from a varnish-manufacturing operation. Emission factor application and limitation information is discussed in Reference 1. Profile 3-01-015 may be used to characterize the volatile organic emissions from a bodying oil type mixing and cooking operation.

DECEMBER 14, 1978 TABLE 3-01-015 POINT SOURCE EVAPORATION, CHEMICAL MANUFACTURING
VARNISH MANUFACTURER, BODYING OIL, GENERAL
DATA CONFIDENCE LEVEL: IV

CONTROL DEVICE: NONE
PROCESS MODIFICATION: NONE
KVB PROFILE KEY 0066

LINE NO.	SAROAD CODE	CHEMICAL NAME	MOLECULAR WEIGHT	PERCENT WEIGHT	PERCENT VOLUME	CHEMICAL CLASSIFICATION
1	43551	ACETONE	58.08	38.70	45.68	4 CARBONYL
2	43552	METHYL ETHYL KETONE	72.10	41.60	39.57	4 CARBONYL
3	43560	METHYL ISOBUTYL KETONE	100.16	16.70	11.45	4 CARBONYL
4	43367	GLYCOL ETHER	62.07	3.00	3.29	5 MISCELLANEOUS
		TOTAL		100.00	99.99	
	0	COMPOUNDS OF CLASSIFICATION 1	.00	.00	.00	
	0	COMPOUNDS OF CLASSIFICATION 2	.00	.00	.00	
	0	COMPOUNDS OF CLASSIFICATION 3	.00	.00	.00	
	3	COMPOUNDS OF CLASSIFICATION 4	68.80	97.00	96.70	
	1	COMPOUNDS OF CLASSIFICATION 5	62.07	3.00	3.29	
	0	COMPOUNDS OF CLASSIFICATION 6	00	.00	.00	
	0	COMPOUNDS OF CLASSIFICATION 7	.00	.00	.00	
	4	COMPOUND COMPOSITE	68.58	100.00	99.99	

NOTES: A. METHOD: CALCULATIONS FROM COMPOSITE SURVEY DATA ENGINEERING EVALUATION OF LITERATURE DATA
B. REFERENCES: LITERATURE TEST DATA (REF. 3)
C. APPLICABLE SCC CATEGORIES: 3-01-015-01

REFERENCES

1. Formica, P. N., "Controlled and Uncontrolled Emission Rates and Applicable Limitations for Eighty Processes," prepared for EPA Office of Air Quality Planning and Standards, Research Triangle Park, NC, EPA 340/1-78-004, April 1978.

2. Danielson, J. A. (ed.), " Air Pollution Engineering Manual," Environmental Protection Agency, Research Triangle Park, NC, AP-40, May 1973.

3. MRC-DA-487, "Source Assessment: Prioritization of Air Pollution from Industrial Surface Coating Operations," EPA-650/2-75-019-a), PB 243-243/1BA.

4. Taback, H. J., et al., "Control of Hydrocarbon Emissions from Stationary Sources in the California South Coast Air Basin," Vols. I and II, KVB, Inc., Tustin, CA, June 1978.

3-01-018 PLASTICS--PVC, GENERAL
--POLYPROPYLENE, GENERAL

Process Description[1]

The manufacture of most resins or plastics begins with the polymerization or linking of the basic compound (monomer), usually a gas or liquid, into high molecular weight noncrystalline solids. The manufacture of the basic monomer is not considered part of the plastics industry and is usually accomplished at a chemical or petroleum plant.

The manufacture of most plastics involves an enclosed reaction or polymerization step, a drying step, and a final treating and forming step. These plastics are polymerized or otherwise combined in completely enclosed stainless steel or glass-lined vessels. Treatment of the resin after polymerization varies with the proposed use. Resins for moldings are dried and crushed or ground into molding powder. Resins such as the alkyl resins that are to be used for protective coatings are normally transferred to an agitated thinning tank, where they are thinned with solvent and then stored in large steel tanks equipped with water-cooled condensers to prevent loss of solvent to the atmosphere. Still other resins are stored in latex form as they come from the reaction kettle.

Emissions[1]

The major sources of air contamination in plastics manufacturing are the emissions of raw materials or monomers, emissions of solvents or other volatile liquids during the reaction, emissions of sublimed solids such as phthalic anhydride in alkyd production, and emissions of solvents during storage and handling of thinned resins. Emission factors for the manufacture of plastics as reported in AP-42 (Ref. 1) are shown below.

EMISSION FACTORS FOR PLASTICS
MANUFACTURING WITHOUT CONTROLS
EMISSION FACTOR RATING: E

	Particulate		Gases	
Type of plastic	lb/ton	kg/MT	lb/ton	kg/MT
Polyvinyl chloride	35[a]	17.5[a]	17[b]	8.5[b]
Polypropylene	3	1.5	0.7[c]	0.35[c]
General	5 10	2.5 5		

[a] Usually controlled with a fabric filter efficiency of 98 to 99 percent.

[b] As vinyl chloride.

[c] As propylene.

The VOC's emitted during the storage of solvents and thinned resins can be calculated based on the information contained within API Bulletins 2517 and 2523 (Refs 2 & 3). Profiles 3-01-018 A and B characterize the VOC emissions from polyvinyl chloride and polypropylene plastic manufacturing, respectively (Refs. 4 & 5).

Controls[1]

The control equipment used in the plastics industry is usually a basic part of the system and serves to recover a reactant or product. These controls generally include:

- floating roof tanks for solvent and thinned resin storage
- vapor recovery systems on volatile material
  - adsorption
  - condensers
- storage units
- purge lines that vent to a flare system, and
- vapor recovery systems on vacuum exhaust lines

Profile Basis[4,5]

Profiles 3-01-018 A and B are based on an engineering evaluation of the process material handled for polyvinyl chloride and polypropylene production.

Data Qualification

AP-42 should be consulted for further information on the development of the presented emission factors. Profiles 3-01-018 A and B may be used to characterize the VOC emissions from a polyvinyl chloride or polypropylene plastics manufacturing facility.

DECEMBER 14, 1978 TABLE 3-01-018A INDUSTRIAL PROCESS, CHEMICAL MANUFACTURING
PLASTICS, PVC, GENERAL
DATA CONFIDENCE LEVEL: III

CONTROL DEVICE: NONE
PROCESS MODIFICATION: NONE
KVB PROFILE KEY 0067

LINE NO.	SAROAD CODE	CHEMICAL NAME	MOLECULAR WEIGHT	PERCENT WEIGHT	PERCENT VOLUME	CHEMICAL CLASSIFICATION
1	43860	VINYL CHLORIDE	62.50	100.00	100.00	5 MISCELLANEOUS
		TOTAL		100.00	100.00	
	0	COMPOUNDS OF CLASSIFICATION 1	.00	.00	.00	
	0	COMPOUNDS OF CLASSIFICATION 2	.00	.00	.00	
	0	COMPOUNDS OF CLASSIFICATION 3	.00	.00	.00	
	0	COMPOUNDS OF CLASSIFICATION 4	.00	.00	.00	
	1	COMPOUNDS OF CLASSIFICATION 5	62.50	100.00	100.00	
	0	COMPOUNDS OF CLASSIFICATION 6	.00	.00	.00	
	0	COMPOUNDS OF CLASSIFICATION 7	.00	.00	.00	
	1	COMPOUND COMPOSITE	62.50	100.00	100.00	

NOTES: A. METHOD: CALCULATIONS FROM COMPOSITE SURVEY DATA ENGINEERING EVALUATION OF LITERATURE DATA
B. REFERENCES: PVC RESIN MANUFACTURERS
C. APPLICABLE SCC CATEGORIES: 3-01-018-01

DECEMBER 14, 1978 TABLE 3-01-018B INDUSTRIAL PROCESS, CHEMICAL MANUFACTURING
PLASTICS, POLYPROPYLENE, GENERAL
DATA CONFIDENCE LEVEL: III

CONTROL DEVICE: NONE
PROCESS MODIFICATION: NONE
KVB PROFILE KEY 0068

LINE NO.	SARGAD CODE	CHEMICAL NAME	MOLECULAR WEIGHT	PERCENT WEIGHT	PERCENT VOLUME	CHEMICAL CLASSIFICATION
1	43205	PROPYLENE	42.08	100.00	100.00	2 OLEFIN
		TOTAL		100.00	100.00	
	0	COMPOUNDS OF CLASSIFICATION 1	.00	.00	.00	
	1	COMPOUNDS OF CLASSIFICATION 2	42.08	100.00	100.00	
	0	COMPOUNDS OF CLASSIFICATION 3	.00	.00	.00	
	0	COMPOUNDS OF CLASSIFICATION 4	.00	.00	.00	
	0	COMPOUNDS OF CLASSIFICATION 5	.00	.00	.00	
	0	COMPOUNDS OF CLASSIFICATION 6	.00	.00	.00	
	0	COMPOUNDS OF CLASSIFICATION 7	.00	.00	.00	
	1	COMPOUND COMPOSITE	42.08	100.00	100.00	

NOTES: A. METHOD: CALCULATIONS FROM COMPOSITE SURVEY DATA ENGINEERING EVALUATION OF LITERATURE DATA
B. REFERENCES: POLYPROPYLENE MANUFACTURER
C. APPLICABLE SCC CATEGORIES: 3-01-018-02

REFERENCES

1. "Compilation of Pollutant Emission Factors," Environmental Protection Agency, Research Triangle Park, NC, AP-42, August 1977.

2. Petrochemical Evaporation Loss from Storage Tanks, American Petroleum Institute, Bulletin 2523, November 1969.

3. Evaporation Loss from Floating-Roof Tanks, American Petroleum Institute, Bulletin 2517, February 1962.

4. Sonnichsen, T. W., Engineer, KVB, Inc.

5. Taback, H. J., et al., "Control of Hydrocarbon Emissions from Stationary Sources in the California South Coast Air Basin," Vol. I and II, KVB, Inc., Tustin, CA, June 1978.

3-01 INDUSTRIAL PROCESS, CHEMICAL MANUFACTURING

3-01-019 PHTHALIC ANHYDRIDE

Process Description[1-3]

Phthalic anhydride (PAN) is produced by the vapor phase oxidation of naphthalene or o-xylene with excess air in fixed or fluid bed catalytic converters using some form of vanadium pentoxide as a catalyst. Regardless of which chemical is used as feedstock, the processes are similar. Air and a raw material, either o-xylene or naphthalene, are fed to the reactor as a heated vaporized mixture. After the oxidation process takes place, the process vapors pass through gas coolers and condensers where the anhydride is separated from the process air stream. The condensed phthalic anhydride is melted and purified by fractionation and then stored. The process air stream is generally passed through a wet scrubber or thermal incinerator before venting to the atmosphere. The average phthalic anhydride plant produces approximately 20,700 tons of finished product yearly.

Emissions[1,2,4]

The greatest contributor of VOC emissions is the reactor and condenser effluent which is vented from the condenser unit. Particulates, sulfur oxides (from o-xylene-based production), and carbon monoxide constitute the major pollutants found in the process gas stream. In addition to this source, there are four minor sources of organic emissions which include:

1. Feed and product storage tanks.
2. Process refining vents.
3. Flaking and bagging operation.
4. Loss of heat transfer medium (Dowtherm A).

The uncontrolled and controlled hydrocarbon emissions from phthalic anhydride manufacturing as reported in Reference 1 are shown below:

HYDROCARBON EMISSIONS FROM PHTHALIC ANHYDRIDE MANUFACTURING

Type of Operation and Control	% Control	Hydrocarbons (Based on 2.4 tons/hr)			
		lbs/ton	kg/MT	lbs/hr	kg/hr
Reactor & condenser effluent, uncontrolled	0	130	65	312	142
Reactor & condenser effluent, incinerator	99	1.3	0.65	3.1	1.9
Reactor & condenser effluent, scrubber	95	6	3	14.4	6.5

Profile 3-01-019-B presents the VOC emissions measured downstream of a thermal incinerator treating the PAN reactor and condenser effluent for o-xylene feedstock based PAN Process (Ref. 4). Effluent flow rate was measured at 28,000 SCFM. PAN production was reported to be 2.1 tons/hr. Profile 3-01-019-A presents the VOC emissions from a PAN liquid waste sump vent. A flow rate of 63 SCFM was measured using an anemometer (Ref. 4).

Controls[1]

Controls designed to reduce or eliminate VOC pollutants contained in the main process stream (reactor and condenser effluent) consist basically of:

- Wet scrubbers
- Incineration--direct-flame
  --catalytic
- Combination of above

Further information on control eqiupment and its limitations can be found in AP-40 (Ref. 5).

Profile Basis[4]

Profile 3-01-019-A is based on a grab sample of the gas coming off of a PAN liquid waste sump. Flow rate was determined using an anemometer.

Profile 3-01-019-B is based on a sampling train catch of a controlled (thermal incinerator), o-xylene feedstock based PAN process stream. Samples were collected by means of glass gas-collecting bottles plus NIOSH type charcoal tubes downstream of a thermal incinerator. Stack gas flow rate was determined through the use of an "S" type pitot tube and thermometer.

Data Qualification

The above mentioned emission factors may be used to estimate the total VOC emissions from either of the two basic PAN processes. Profile 3-01-019-B may be used to characterize the controlled (thermal incineration) process stream VOC emissions from a PAN process using o-xylene feedstock. Profile 3-01-019A may be used to characterize the VOC emissions from a PAN liquid waste sump.

DECEMBER 14, 1978 TABLE 3-01-019A INDUSTRIAL PROCESS, CHEMICAL MANUFACTURING
PHTHALIC ANHYDRIDE, PROCESS WASTE SUMP
DATA CONFIDENCE LEVEL: III

CONTROL DEVICE: NONE
PROCESS MODIFICATION: NONE
KVB PROFILE KEY 0071

LINE NO.	SAROAD CODE	CHEMICAL NAME	MOLECULAR WEIGHT	PERCENT WEIGHT	PERCENT VOLUME	CHEMICAL CLASSIFICATION
1	43122	ISOMERS OF PENTANE	72.15	22.60	20.55	1 PARAFFIN
2	43204	PROPANE	44.09	10.80	16.09	1 PARAFFIN
3	43212	N-BUTANE	58.12	33.90	38.28	1 PARAFFIN
4	43231	N-HEXANE	86.17	21.40	16.28	1 PARAFFIN
5	43248	CYCLOHEXANE	84.16	11.30	8.80	1 PARAFFIN
		TOTAL		100.00	100.00	
	5	COMPOUNDS OF CLASSIFICATION 1	65.60	100.00	100.00	
	0	COMPOUNDS OF CLASSIFICATION 2	.00	.00	.00	
	0	COMPOUNDS OF CLASSIFICATION 3	.00	.00	.00	
	0	COMPOUNDS OF CLASSIFICATION 4	.00	.00	.00	
	0	COMPOUNDS OF CLASSIFICATION 5	.00	.00	.00	
	0	COMPOUNDS OF CLASSIFICATION 6	.00	00	.00	
	0	COMPOUNDS OF CLASSIFICATION 7	.00	.00	.00	
	5	COMPOUND COMPOSITE	65.60	100.00	100.00	

NOTES: A. METHOD: CALCULATIONS FROM COMPOSITE SURVEY DATA GC-MS ANALYSIS OF GRAB SAMPLE
B. REFERENCES: KVB TEST DATA (REF. 4)
C. APPLICABLE SCC CATEGORIES: 3-01-019-03

DECEMBER 14, 1978 TABLE 3-01-019B INDUSTRIAL PROCESS, CHEMICAL MANUFACTURING
PHTHALIC ANHYDRIDE, PROCESS INCINERATOR
DATA CONFIDENCE LEVEL: III

CONTROL DEVICE: INCINERATOR
PROCESS MODIFICATION: NONE
KVB PROFILE KEY 0276

LINE NO.	SAROAD CODE	CHEMICAL NAME	MOLECULAR WEIGHT	PERCENT WEIGHT	PERCENT VOLUME	CHEMICAL CLASSIFICATION	
1	43204	PROPANE	44.09	.90	.37	1	PARAFFIN
2	43212	N-BUTANE	58.12	2.20	.70	1	PARAFFIN
3	43214	ISOBUTANE	58.12	.40	.13	1	PARAFFIN
4	43205	PROPYLENE	42.08	3.10	1.36	2	OLEFIN
5	43551	ACETONE	58.08	8.60	2.71	4	CARBONYL
6	43206	ACETYLENE	26.04	4.40	3.10	5	MISCELLANEOUS
7	43201	METHANE	16.04	80.00	91.41	6	METHANE
8	43202	ETHANE	30.07	.40	.24	7	NON-REACTIVE
		TOTAL		100.00	100.02		
	3	COMPOUNDS OF CLASSIFICATION 1	53.79	3.50	1.20		
	1	COMPOUNDS OF CLASSIFICATION 2	42.08	3.10	1.36		
	0	COMPOUNDS OF CLASSIFICATION 3	.00	.00	.00		
	1	COMPOUNDS OF CLASSIFICATION 4	58.08	8.60	2.71		
	1	COMPOUNDS OF CLASSIFICATION 5	26.04	4.40	3.10		
	1	COMPOUNDS OF CLASSIFICATION 6	16.04	80.00	91.41		
	1	COMPOUNDS OF CLASSIFICATION 7	30.07	.40	.24		
	8	COMPOUND COMPOSITE	18.33	100.00	100.02		

NOTES: A. METHOD: CALCULATIONS FROM COMPOSITE SURVEY DATA GC-MS ANALYSIS OF SAMPLING TRAIN CATCH AT INCINERATOR OUTLET
B. REFERENCES: KVB TEST DATA (REF. 4)
C. APPLICABLE SCC CATEGORIES: 3-01-019-03

REFERENCES

1. Formica, P. N., "Controlled and Uncontrolled Emission Rates and Applicable Limitations for Eighty Processes," prepared for EPA Office of Air Quality Planning and Standards, Research Triangle Park, NC, EPA 340/1-78-004, April 1978.

2. Compilation of Pollutant Emission Factors," Environmental Protection Agency, Research Triangle Park, NC, AP-42, August 1977.

3. Shreve, R. N., and Brink, J. A., Jr., "Chemical Process Industries," Fourth Ed., McGraw-Hill Book Co., 1977.

4. Taback, H. J., et al., "Control of Hydrocarbon Emissions from Stationary Sources in the California South Coast Air Basin," Vol. I and II, KVB, Inc., Tustin, CA, June 1978.

5. Danielson, J. A. (ed.), "Air Pollution Engineering Manual," Environmental Protection Agency, Research Triangle Park, NC, AP-40, May 1973.

3-01 INDUSTRIAL PROCESS, CHEMICAL MANUFACTURING

3-01-020 PRINTING INKS--COOKING, GENERAL

Process Description[1-3]

Printing inks consist of a fine dispersion of pigments or dyes in a vehicle which may be a drying oil with or without natural or synthetic resins and added driers or thinners.

The major classes of printing ink are:

- letterpress
- lithographic
- flexographic
- rotogravure

The major steps involved in the manufacturing of printing inks are:

- cooking the vehicle and adding the dyes
- grinding the pigment into the vehicle using a roller mill
- replacing water in the wet pigment pulp by an ink vehicle (commonly known as the flushing process)

Emissions[1]

Vehicle preparation by heating is the largest source of hydrocarbon emissions from ink manufacturing. At 350°F (175°C) the resins, drying oils, petroleum oils and solvents decompose, and the decomposition products are emitted from the cooking vessel. The emissions continue throughout the cooking process, reaching a maximum just after the maximum temperature has been reached.

The quantity, composition, and rate of VOC emissions from ink manufacturing depend upon the following process variables:

- cooking time and temperature
- ingredients
- method of introducing additives
- degree of stirring, and
- extent of air and gas blowing

The estimated organic emissions from a typical ink manufacturing process are listed below.

HYDROCARBON EMISSIONS FROM PRINTING INK MANUFACTURE

Type of Operation and Control	% Control	Hydrocarbon Emissions (based on 924 tons/yr)			
		lb/ton	kg/MT	lb/hr	kg/hr
General Vehicle Cooking, uncontrolled	0	120	60	12.0	5.4
General Vehicle Cooking with Scrubber & Afterburner	90	12	5.4	1.2	0.54
Oil Vehicle Cooking, uncontrolled	0	40	20	4.0	1.8
Oil Vehicle Cooking with Scrubber & Afterburner	90	4	1.8	0.4	0.18
Oleoresinous Vehicle Cooking, uncontrolled	0	150	75	15.0	6.8
Oleoresinous Vehicle Cooking with Scrubber & Afterburner	90	15	6.8	1.5	0.68
Cooking of Alkyds, uncontrolled	0	160	80	16.0	7.3
Cooking of Alkyds with Scrubber & Afterburner	90	16	7.3	1.6	0.73

Source: Ref. 1

Profile 3-01-020 presents the estimated VOC emissions applicable to a typical printing ink manufacturer (Ref. 3).

Control[1,4]

Volatile hydrocarbon emissions from vehicle cooking can generally be reduced by 90% through the use of scrubbers or condensers followed by an afterburner. AP-40 offers a thorough explanation of the advantages and limitations of each type of control device (Ref. 4).

Profile Basis[5,6]

Profile 3-01-020 is based on an engineering evaluation of an organic emissions control strategy report by Trijonas (Ref. 6).

Data Qualification

Reference 1 should be consulted for further information on the development and limitations of the presented hydrocarbon emission factors.

Profile 3-01-020 may be used to characterize the VOC emissions from a typical ink manufacturing process.

DECEMBER 14, 1978 TABLE 3-01-020

INDUSTRIAL PROCESS, CHEMICAL MANUFACTURING
PRINTING INK COOKING, GENERAL
DATA CONFIDENCE LEVEL: IV

CONTROL DEVICE: NONE
PROCESS MODIFICATION: NONE
KVB PROFILE KEY 0072

LINE NO.	SAROAD CODE	CHEMICAL NAME	MOLECULAR WEIGHT	PERCENT WEIGHT	PERCENT VOLUME	CHEMICAL CLASSIFICATION
1	43118	MINERAL SPIRITS	114.00	25.50	15.80	1 PARAFFIN
2	43248	CYCLOHEXANE	84.16	5.00	4.16	1 PARAFFIN
3	45106	ISOMERS OF DIETHYLBENZENE	134.21	3.50	1.83	3 AROMATIC
4	45203	ETHYLBENZENE	106.16	3.00	1.97	3 AROMATIC
5	43551	ACETONE	58.08	5.50	6.70	4 CARBONYL
6	43552	METHYL ETHYL KETONE	72.10	5.00	4.87	4 CARBONYL
7	43301	METHYL ALCOHOL	32.04	5.00	11.00	5 MISCELLANEOUS
8	43302	ETHYL ALCOHOL	46.07	2.50	3.81	5 MISCELLANEOUS
9	43304	ISOPROPYL ALCOHOL	60.09	38.00	44.57	5 MISCELLANEOUS
10	43305	N-BUTYL ALCOHOL	74.12	3.00	2.89	5 MISCELLANEOUS
11	43435	N-BUTYL ACETATE	116.16	4.00	2.40	5 MISCELLANEOUS
		TOTAL		100.00	100.00	
	2	COMPOUNDS OF CLASSIFICATION 1	107.78	30.50	19.96	
	0	COMPOUNDS OF CLASSIFICATION 2	.00	.00	.00	
	2	COMPOUNDS OF CLASSIFICATION 3	119.67	6.50	3.80	
	2	COMPOUNDS OF CLASSIFICATION 4	68.98	10.50	11.57	
	5	COMPOUNDS OF CLASSIFICATION 5	57.20	52.50	64.67	
	0	COMPOUNDS OF CLASSIFICATION 6	.00	.00	.00	
	0	COMPOUNDS OF CLASSIFICATION 7	.00	.00	.00	
	11	COMPOUND COMPOSITE	70.45	100.00	100.00	

NOTES: A. METHOD: CALCULATIONS FROM COMPOSITE SURVEY DATA ENGINEERING EVALUATION OF LITERATURE DATA
B. REFERENCES: PRINTING INK MANUFACTURER
C. APPLICABLE SCC CATEGORIES: 3-01-020-01,-99

REFERENCES

1. Formica, P. N., "Controlled and Uncontrolled Emission Rates and Applicable Limitations for Eighty Processes," prepared for EPA Office of Air Quality Planning and Standards, Research Triangle Park, NC, EPA-340/1-78-004, April 1978.

2. Shreve, R. N., and Brink, J. A., Jr., "Chemical Process Industries," Fourth Ed., McGraw-Hill Book Co., 1977.

3. "Compilation of Pollutant Emission Factors," Environmental Protection Agency, Research Triangle Park, NC, AP-42, August 1977.

4. Danielson, J. A. (ed.), "Air Pollution Engineering Manual," Environmental Protection Agency, Research Triangle Park, NC, AP-40, May 1973.

5. Taback, H. J., et al., "Control of Hydrocarbon Emissions from Stationary Sources in the California South Coast Air Basin," Vol. I and II, KVB, Inc., Tustin, CA, June 1978.

6. Trijonas, J. C. and Arledge, K. W., "Impact of Reactivity Criteria on Organics Emission Control Strategies in the Metropolitan Los Angeles AQCR," EPA-600/3-76-091, August 1976.

3-01-026 SYNTHETIC RUBBER--AUTO TIRE PRODUCTION, GENERAL

Process Description[1]

The automobile tire is initially built up as a cylinder on a collapsible, round rotating drum. Layers of cords embedded in a proper compound are applied, one layer tying the beads together in one direction and another layer in another direction. The beads--wire cables embedded in a tough, hard rubber-are "stitched" to the tire by folding the end of the cord fabric over. Last, the tread formed by extrusion is laid on, and the ends lapped together. The tire-building drum is collapsed, and the cylindrical tire removed and placed on a press. Here an inflatable rubber bag, usually made from butyl rubber and on a movable stem, is blown up inside the tire; the press mold is simultaneously closed, giving the tire a doughnut shape. Heat is applied through the mold and by steam inside the bag. Excess rubber escapes through weep holes and, after a timed cure at preselected temperature, the tire is formed. Present-day tires may be tubeless, with the air-retentive layer built in, or an inner tube extruded from butyl rubber may be used. Butyl rubber, although a very "dead" rubber, has outstanding resistance to passage of air.

Radial tires require a slightly different method of assembly from the traditional bias cord tires. Belts of rayon, polyester, fiberglass and steel are all being used.

Emissions[2]

Emissions of VOC's to the atmosphere can occur during the manufacturing of automotive tires where the evaporation of a solvent, curing of an adhesive, tire painting, tire molding, or the thermal breakdown of rubber occurs.

Quantitative and qualitative tests (Ref. 2) were performed at a typical automotive tire manufacturing plant. The tire processing devices and their associated emission rates are presented below. Gas samples were collected from the exhaust vents of specified processing equipment downstream of any control device.

Device Description	Control Device	Profile No.	Reported Solvent and/or Adhesive	Hydrocarbon Emissions lb/hr	g/scf	Other
Tuber Cement Unit	None	A	Std 200 Thinner + Shell Sol M-48	51.6	4.59	0.10 lb/ tire (a)
White Sidewall Tuber Unit	None	B	n-hexane	62.2	7.72	(b)
Bead Dip Tank	None	C	Std 200 Thinner + Shell Sol M-48	49.3	5.98	(c)

(a) Average size tire

(b) Adhesive is applied to a variety of tire components in ribbon form; therefore emission rates cannot be related to the quantity of tires processed.

(c) Hydrocarbons continuously evaporating from tank; not valid to relate to tires or beads processed.

Controls[2]

Control of gaseous hydrocarbons resulting from the manufacture of automobile tires generally take the form of charcoal adsorbers, direct-flame and catalytic incineration, chemical absorbers, vapor condensation, process and material changes, and improved maintenance. For a thorough discussion of the above-mentioned control devices, refer to References 2 and 3.

Profile Basis[2]

Gaseous hydrocarbon samples were taken in the exhaust ducts downstream of any control equipment. Vapor samples were collected using a gas collecting bottle followed by two NIOSH type charcoal tubes. Identification and quantification of the organic compound species was made using a gas chromatograph (Poropak column). The results are presented in profiles 3-01-026-A, B and C. Exhaust mass flow rate determinations were made using an "S" type pitot tube; temperature measurements were by thermometer.

Data Qualification

The following profiles only apply to the specified tire manufacturing equipment employing the specified solvents and/or adhesive. Any alteration as to process rate, emissions control, and process material such as adhesive composition, would invalidate the presented emission factors and profiles.

DECEMBER 14, 1978 TABLE 3-01-026A INDUSTRIAL PROCESS, CHEMICAL MANUFACTURING, SYNTHETIC RUBBER
AUTOMOTIVE TIRES, TUBER ADHESIVE
DATA CONFIDENCE LEVEL: III

CONTROL DEVICE: NONE
PROCESS MODIFICATION: NONE
KVB PROFILE KEY 0272

LINE NO.	SAROAD CODE	CHEMICAL NAME	MOLECULAR WEIGHT	PERCENT WEIGHT	PERCENT VOLUME	CHEMICAL CLASSIFICATION	
1	43106	ISOMERS OF HEPTANE	100.20	4.70	4.34	1	PARAFFIN
2	43107	ISOMERS OF OCTANE	114.23	80	.65	1	PARAFFIN
3	43115	C-7 CYCLOPARAFFINS	98.19	43.20	40.67	1	PARAFFIN
4	43116	C-8 CYCLOPARAFFINS	112.23	6.00	4.99	1	PARAFFIN
5	43231	N-HEXANE	86.17	5.80	6.19	1	PARAFFIN
6	43232	N-HEPTANE	100.20	1.90	1.76	1	PARAFFIN
7	43233	N-OCTANE	114.23	.40	.37	1	PARAFFIN
8	43248	CYCLOHEXANE	84.16	16.30	17.93	1	PARAFFIN
9	43262	METHYLCYCLOPENTANE	84.16	17.70	19.41	1	PARAFFIN
10	45202	TOLUENE	92.13	.40	.37	3	AROMATIC
11	45201	BENZENE	78.11	2.80	3.33	7	NON-REACTIVE
		TOTAL		100.00	100.01		
	9	COMPOUNDS OF CLASSIFICATION 1	93.00	96.80	96.31		
	0	COMPOUNDS OF CLASSIFICATION 2	.00	.00	.00		
	1	COMPOUNDS OF CLASSIFICATION 3	92.13	.40	.37		
	0	COMPOUNDS OF CLASSIFICATION 4	.00	.00	.00		
	0	COMPOUNDS OF CLASSIFICATION 5	.00	00	.00		
	0	COMPOUNDS OF CLASSIFICATION 6	.00	.00	.00		
	1	COMPOUNDS OF CLASSIFICATION 7	78.11	2.80	3.33		
	11	COMPOUND COMPOSITE	92.50	100.00	100.01		

NOTES: A. METHOD: CALCULATIONS FROM COMPOSITE SURVEY DATA GC-MS ANALYSIS OF GRAB SAMPLE
B. REFERENCES: KVB TEST DATA (REF. 2)
C. APPLICABLE SCC CATEGORIES: 3-01-026-20

DECEMBER 14, 1978 TABLE 3-01-026B INDUSTRIAL PROCESS, CHEMICAL MANUFACTURING, SYNTHETIC RUBBER
AUTOMOBILE TIRES, TUBER ADHESIVE, WHITE SIDEWALL
DATA CONFIDENCE LEVEL: III

CONTROL DEVICE: NONE
PROCESS MODIFICATION: NONE
KVB PROFILE KEY 0273

LINE NO.	SAROAD CODE	CHEMICAL NAME	MOLECULAR WEIGHT	PERCENT WEIGHT	PERCENT VOLUME	CHEMICAL CLASSIFICATION	
1	43105	ISOMERS OF HEXANE	86.17	24.20	23.81	1	PARAFFIN
2	43106	ISOMERS OF HEPTANE	100.20	.20	.17	1	PARAFFIN
3	43231	N-HEXANE	86.17	33.60	33.05	1	PARAFFIN
4	43242	CYCLOPENTANE	70.14	.20	.25	1	PARAFFIN
5	43248	CYCLOHEXANE	84.16	.40	.42	1	PARAFFIN
6	43262	METHYLCYCLOPENTANE	84.16	33.70	33.90	1	PARAFFIN
7	45201	BENZENE	78.11	7.70	8.39	7	NON-REACTIVE
		TOTAL		100.00	99.99		
	6	COMPOUNDS OF CLASSIFICATION 1	85.40	92.30	91.60		
	0	COMPOUNDS OF CLASSIFICATION 2	.00	.00	.00		
	0	COMPOUNDS OF CLASSIFICATION 3	.00	.00	.00		
	0	COMPOUNDS OF CLASSIFICATION 4	.00	.00	.00		
	0	COMPOUNDS OF CLASSIFICATION 5	.00	.00	.00		
	0	COMPOUNDS OF CLASSIFICATION 6	.00	.00	.00		
	1	COMPOUNDS OF CLASSIFICATION 7	78.11	7.70	8.39		
	7	COMPOUND COMPOSITE	84.79	100.00	99.99		

NOTES: A. METHOD: CALCULATIONS FROM COMPOSITE SURVEY DATA GC-MS ANALYSIS OF GRAB SAMPLE
B. REFERENCES: KVB TEST DATA (REF. 2)
C. APPLICABLE SCC CATEGORIES: 3-01-026-20

DECEMBER 14, 1978 TABLE 3-01-026C INDUSTRIAL PROCESS, CHEMICAL MANUFACTURING, SYNTHETIC RUBBER
AUTOMOBILE TIRE PRODUCTION
DATA CONFIDENCE LEVEL: III

CONTROL DEVICE: NONE
PROCESS MODIFICATION: NONE
KVB PROFILE KEY 0274

LINE NO.	SAROAD CODE	CHEMICAL NAME	MOLECULAR WEIGHT	PERCENT WEIGHT	PERCENT VOLUME	CHEMICAL CLASSIFICATION	
1	43115	C-7 CYCLOPARAFFINS	98.19	99.84	99.71	1	PARAFFIN
2	43116	C-8 CYCLOPARAFFINS	112.23	.08	.10	1	PARAFFIN
3	43248	CYCLOHEXANE	84.16	.04	.10	1	PARAFFIN
4	43262	METHYLCYCLOPENTANE	84.16	.04	.10	1	PARAFFIN
		TOTAL		100.00	100.01		
	4	COMPOUNDS OF CLASSIFICATION 1	98.18	100.00	100.01		
	0	COMPOUNDS OF CLASSIFICATION 2	.00	.00	.00		
	0	COMPOUNDS OF CLASSIFICATION 3	.00	.00	.00		
	0	COMPOUNDS OF CLASSIFICATION 4	.00	.00	.00		
	0	COMPOUNDS OF CLASSIFICATION 5	.00	.00	.00		
	0	COMPOUNDS OF CLASSIFICATION 6	.00	.00	.00		
	0	COMPOUNDS OF CLASSIFICATION 7	.00	.00	.00		
	4	COMPOUND COMPOSITE	98.18	100.00	100.01		

NOTES: A. METHOD: CALCULATIONS FROM COMPOSITE SURVEY DATA GC-MS ANALYSIS OF GRAB SAMPLE
B. REFERENCES: KVB TEST DATA (REF. 2)
C. APPLICABLE SCC CATEGORIES: 3-01-026-20

REFERENCES

1. Shreve, R. N. and Brink, J. A., "Chemical Process Industries," Fourth Edition, McGraw-Hill Book Co., 1977.

2. Taback, H. J., et al., "Control of Hydrocarbon Emissions from Stationary Sources in the California South Coast Air Basin," Vol. I and II, KVB, Inc., Tustin, CA, June 1978.

3. Danielson, J. A. (ed.), "Air Pollution Engineering Manual," Environmental Protection Agency, Research Triangle Park, NC, AP-40, May 1973.

3-01 INDUSTRIAL PROCESS, CHEMICAL MANUFACTURING

3-01-125 ETHYLENE DICHLORIDE

Process Description[1,2]

The preparation of ethylene dichloride almost always centers around large plants using a balanced combination of two processes: direct chlorination of ethylene with chlorine; oxychlorination in which ethylene, hydrogen chloride, and oxygen react to form the same product. The annual production of a typical plant is 208,000 tons per year.

In the direct chlorination process, chlorine and ethyelene are fed into a reactor where the reaction takes place under 100-120°F (38-49°C) and 10-20 PSIG. Crude ethylene dichloride emerges from the reactor in liquid form and is purified by passage through a series of condensers, separators, and wash towers.

In the oxychlorination process, ethylene, oxygen, and hydrochloric acid are fed to a fixed or fluid bed reactor where crude ethylene dichloride is absorbed from the gas stream and the non-condensible gases are vented to the atmosphere. The crude product is refined in a finishing system.

Emissions[1]

The quantity of hydrocarbons released to the atmosphere is considerably lower for the direct chlorination process than for the oxychlorination process. The major source of emissions from the direct chlorination processes is the gas vented from the scrubbing column. This gas stream contains small amounts of ethylene, ethylene dichloride, vinyl chloride, and impurities in the feed. The vent gas from the oxychlorination process is also a key source of atmospheric emissions. In both cases, emission rates may vary due to significant differences in product recovery systems. Ethyelene dichloride may also be

released by storage tanks. Controlled and uncontrolled hydrocarbon emissions from a typical ethylene dichloride plant are presented below.

HYDROCARBON EMISSIONS FROM ETHYLENE DICHLORIDE MANUFACTURE

		Hydrocarbon Emissions (Based on 24 tons/hr)			
	% Control	lbs/ Ton of Product	kg/ M Ton of Product	lbs/hr	kg/hr
Direct Chlorination with Incineration of Vent Gases	0	5-8	2.5-4	119-190	60-95
	80	1-1.6	0.5-0.8	24-38	12-19
	90	0.5-0.8	0.3-0.4	12-19	6-9.5
	99	0.05-0.08	0.03-0.04	1.2-1.9	0.6-1
Oxychlorination with Incineration of Vent Gases	0	50-140	25-70	1190-3330	600-1670
	80	10-28	5-14	240-660	119-330
	90	5-14	2.5-7	119-333	60-167
	99	0.05-1.4	0.25-0.7	12-33	6-16.6
Storage	0	1.2	0.6	28.6	14.3

Source: Ref. 1

Profile 3-01-125 presents the VOC emissions from an ethylene dichloride storage facility (Ref. 3).

Controls[1,3]

No emissions control for the ethylene dichloride industry has yet been demonstrated. The producers of this chemical use various methods of product recovery and the emissions from each process vary. Possible hydrocarbon emission control devices would include thermal or catalytic incineration, having control efficiencies approaching 100 percent. The preceeding table presents emission rates that could be attained with incineration of vent gases. AP-40 presents a thorough explanation of the advantages and limitations of each control method (Ref. 3).

Profile Basis[4]

Profile 3-01-125 is based on an inspection of the process material and fluid stored.

Data Qualification

Reference 1 should be consulted for information on the applications and limitations of the presented emission factors.

Profile 3-01-125 may be used to characterize the VOC emissions from an ethylene dichloride storage facility. This profile may also be applied to the VOC emissions estimate for the entire plant taking into consideration that ethylene dichloride would account for the majority of VOC pollutants emitted during processing.

DECEMBER 14, 1978 TABLE 3-01-125 INDUSTRIAL PROCESS, CHEMICAL MANUFACTURING
ETHYLENE DICHLORIDE, DIRECT CHLORINATION
DATA CONFIDENCE LEVEL: III

CONTROL DEVICE: NONE
PROCESS MODIFICATION: NONE
KVB PROFILE KEY 0078

LINE NO.	SARDAD CODE	CHEMICAL NAME	MOLECULAR WEIGHT	PERCENT WEIGHT	PERCENT VOLUME	CHEMICAL CLASSIFICATION
1	43815	ETHYLENE DICHLORIDE	99.00	100.00	100.00	7 NON-REACTIVE
		TOTAL		100.00	100.00	
	0	COMPOUNDS OF CLASSIFICATION 1	.00	.00	.00	
	0	COMPOUNDS OF CLASSIFICATION 2	.00	.00	.00	
	0	COMPOUNDS OF CLASSIFICATION 3	.00	.00	.00	
	0	COMPOUNDS OF CLASSIFICATION 4	.00	.00	.00	
	0	COMPOUNDS OF CLASSIFICATION 5	.00	.00	.00	
	0	COMPOUNDS OF CLASSIFICATION 6	.00	.00	.00	
	1	COMPOUNDS OF CLASSIFICATION 7	99.00	100.00	100.00	
	1	COMPOUND COMPOSITE	99.00	100.00	100.00	

NOTES: A. METHOD: CALCULATIONS FROM COMPOSITE SURVEY DATA INSPECTION OF CHEMICAL FORMULATION
B. REFERENCES: ETHYLENE DICHLORIDE MANUFACTURER
C. APPLICABLE SCC CATEGORIES: 3-01-125-02,-99

REFERENCES

1. Formica, P. N., "Controlled and Uncontrolled Emission Rates and Applicable Limitations for Eighty Processes," prepared for EPA Office of Air Quality Planning and Standards, Research Triangle Park, NC, EPA 340/1-78-004, April 1978.

2. Shreve, R. N., and Brink, J. A., Jr., "Chemical Process Industries," Fourth Ed., McGraw-Hill Book Co., 1977.

3. Danielson, J. A. (ed.), "Air Pollution Engineering Manual," Environmental Protection Agency, Research Triangle Park, NC, AP-40, May 1973.

4. Taback, H. J., et al., "Control of Hydrocarbon Emissions from Stationary Sources in the California South Coast Air Basin," Vol. I and II, KVB, Inc., Tustin, CA, June 1978.

3-01 INDUSTRIAL PROCESS--CHEMICAL MANUFACTURING

3-01-999 OTHER/NOT CLASSIFIED--WASTE GAS FLARES

Process Description[1,2]

Occasionally modern chemical processes produce excess quantities of waste gases. Every chemical plant must be equipped to handle excess gas production which is produced intermittently, and large volumes of hydrocarbon vapors produced very rapidly from process units during emergencies. A number of devices are utilized to recover these gases but facilities for the ultimate disposal of excess vapors are usually necessary. This is generally accomplished by combustion in waste gas flares although small amounts may be vented to the fireboxes of heaters or boilers.

The objective of combustion in a waste gas flare is the oxidation of the hydrocarbon vapors to carbon dioxide and water without the production of smoke and objectionable odors.

The three common types of waste gas flares in use are: elevated flares, ground-level flares and burning pits. The two major types of elevated smokeless, waste gas flares in current use are the air-aspirating venturi flare and the steam-injected flare.

Emissions[1,2]

The smokeless flare when properly designed attain a high degree of combustion efficiency. Actual field testing of flares is generally not feasible because of safety considerations, the erratic nature of the gas flow to the flare and the inaccessibility of most flare tips.

A hydrocarbon emission factor of 5 lbs/10^3 bbl refinery capacity for refinery flares is reported in AP-42 (Ref. 1). Data on chemical industry waste gas flares is not presently available.

Profile 3-01-999 presents the estimated VOC emissions from a chemical process waste gas flare (Ref. 2 & 3).

Controls[2]

Based on the design of smokeless flares essentially complete combustion does occur. Control therefore, would amount to the conversion of a smoking type flare to a smokeless type flare air-aspirating venturi flare or steam-injected flare followed by proper maintenance.

AP-40 offers a thorough explanation of the design, application and limitations of various waste gas flare systems (Ref. 2). Another good reference is the APRI Manual on Disposal of Refinery Wastes (Ref. 5).

Profile Basis[3,4]

Profile 3-01-999 was based on a survey and engineering evaluation of pertinent literature. This profile represents a composite of many chemical industry waste-gas flares.

Data Qualification

Profile 3-01-999 may be used with discretion to characterize the volatile organic emissions from a chemical industry waste gas flare.

In lieu of a more applicable emission factor, the AP-42 value of 5 lbs/10^3 bbl plant capacity refinery flare emission factor may also be applied with discretion.

DECEMBER 14, 1978 TABLE 3-01-999 INDUSTRIAL PROCESS, CHEMICAL MANUFACTURING
OTHER, FLARES
DATA CONFIDENCE LEVEL. IV

CONTROL DEVICE: NONE
PROCESS MODIFICATION: NONE
KVB PROFILE KEY 0079

LINE NO.	SAROAD CODE	CHEMICAL NAME	MOLECULAR WEIGHT	PERCENT WEIGHT	PERCENT VOLUME	CHEMICAL CLASSIFICATION	
1	43248	CYCLOHEXANE	84.16	1.80	.96	1	PARAFFIN
2	43120	ISOMERS OF BUTENE	56.10	8.90	7.28	2	OLEFIN
3	43203	ETHYLENE	28.05	21.60	35.27	2	OLEFIN
4	43205	PROPYLENE	42.08	9.00	9.80	2	OLEFIN
5	43213	BUTENE	56.10	4.10	3.34	2	OLEFIN
6	45102	ISOMERS OF XYLENE	106.16	1.30	.55	3	AROMATIC
7	45202	TOLUENE	92.13	4.10	2.06	3	AROMATIC
8	45220	STYRENE	104.14	3.40	1.51	3	AROMATIC
9	43502	FORMALDEHYDE	30.03	1.70	2.61	4	CARBONYL
10	43503	ACETALDEHYDE	44.05	.70	.73	4	CARBONYL
11	43510	BUTYRALDEHYDE	72.12	.80	.50	4	CARBONYL
12	43206	ACETYLENE	26.04	1.00	1.74	5	MISCELLANEOUS
13	43301	METHYL ALCOHOL	32.04	5.40	7.74	5	MISCELLANEOUS
14	43302	ETHYL ALCOHOL	46.07	1.40	1.37	5	MISCELLANEOUS
15	43304	ISOPROPYL ALCOHOL	60.09	2.50	1.92	5	MISCELLANEOUS
16	43305	N-BUTYL ALCOHOL	74.12	.50	32	5	MISCELLANEOUS
17	43438	ETHYL ACRYLATE	100.11	.80	.37	5	MISCELLANEOUS
18	43601	ETHYLENE OXIDE	44.05	4.60	4.76	5	MISCELLANEOUS
19	43602	PROPYLENE OXIDE	58.08	1.40	1.10	5	MISCELLANEOUS
20	43704	ACRYLONITRILE	55.00	3.00	2.52	5	MISCELLANEOUS
21	43812	ETHYL CHLORIDE	64.52	7.20	5.13	5	MISCELLANEOUS
22	43860	VINYL CHLORIDE	62.50	.60	46	5	MISCELLANEOUS
23	45300	PHENOLS	94.11	2.00	.96	5	MISCELLANEOUS
24	45401	XYLENE BASE ACIDS	230.00	1.30	.27	5	MISCELLANEOUS
25	43801	METHYL CHLORIDE	50.49	.90	.82	7	NON-REACTIVE
26	45201	BENZENE	78.11	10.00	5.86	7	NON-REACTIVE
		TOTAL		100.00	99.95		

1	COMPOUNDS OF CLASSIFICATION 1	84.16	1.80	.96
4	COMPOUNDS OF CLASSIFICATION 2	35.87	43.60	55.69
3	COMPOUNDS OF CLASSIFICATION 3	98.40	8.80	4.12
3	COMPOUNDS OF CLASSIFICATION 4	38.18	3.20	3.84
13	COMPOUNDS OF CLASSIFICATION 5	50.83	31.70	28.66
0	COMPOUNDS OF CLASSIFICATION 6	.00	00	.00
2	COMPOUNDS OF CLASSIFICATION 7	74.72	10.90	6.68
26	COMPOUND COMPOSITE	45.89	100.00	99.95

NOTES: A. METHOD: CALCULATIONS FROM COMPOSITE SURVEY DATA ENGINEERING EVALUATION OF LITERATURE DATA
B. REFERENCES: T.W. SONNICHSEN, KVB ENGINEER
C. APPLICABLE SCC CATEGORIES: 3-01-999-99

REFERENCES

1. "Compilation of Pollutant Emission Factors," Environmental Protection Agency, Research Triangle Park, NC, AP-42, August 1977.

2. Danielson, J. A., (ed.), "Air Pollution Engineering Manual," Environmental Protection Agency, Research Triangle Park, NC, AP-40, May 1973.

3. Sonnichsen, T. W., KVB Engineer.

4. Taback, H. J., et al., "Control of Hydrocarbon Emissions from Stationary Sources in the California South Coast Air Basin," Vol. I and II, KVB, Inc., Tustin, CA, June 1978.

5. "Manual on Disposal of Refinery Wastes," Vol. II, American Petroleum Institute, Division of Refinery, Washington, D.C., 5th Ed., 1957.

3-02 INDUSTRIAL PROCESS, FOOD/AGRICULTURE

3-02-009 FERMENTATION--BEER

Process Description[1]

The manufacture of beer from grain is a multiple-step process. From the time the grain is harvested until the beer manufacturing process is complete, the following events take place at the brewery:

1. Malting of the barley (germinating barley by soaking in water followed by kiln drying),
2. addition of corn, grit, rice,
3. conversion of starch to maltose by enzymatic processes,
4. separation of wort (liquid to be fermented) from grain,
5. hopping (addition of cones of the hop plant) and boiling of wort,
6. cooling of wort,
7. addition of yeast,
8. fermentation
9. removal of settled yeast,
10. filtration,
11. carbonation,
12. aging, and
13. packaging.

Emissions[1,2]

Emissions from fermentation processes are nearly all gases and primarily consist of carbon dioxide, hydrogen, oxygen, and water vapor; none of which present an air pollution problem. Gaseous hydrocarbons are also emitted from the drying of spent grains and yeast in beer.

The hydrocrabon emission rate may be approximated by assuming that one percent by weight of spent grain is emitted as hydrocarbon (Ref. 1).

Assuming the grain loses 20 percent of its weight during the manufacturing process, for every pound of spent grain, 1.25 pounds of raw grain are required. Therefore, each 1.25 pounds of input discharges 0.01 pounds of hydrocarbons. Based on the above, hydrocarbon emissions from beer processing are detailed below:

TABLE OF VOC EMISSIONS FROM BEER PROCESSING

		Hydrocarbon Emissions			
	%			(16.1 tons/hour)	
Type of Operation and Control	Control	lb/ton	kg/ton	lb/hr	kg/hr
Beer processing, uncontrolled	0	2.63	1.32	42.3	19.2
Beer processing, incineration	99	0.0263	0.0132	0.42	0.19

(Reference 1)

Control[1]

The major VOC species emitted during processing is ethyl alcohol which can be effectively controlled by incineration or absorption.

There is a limited quantity of ethyl alcohol from a typical processing plant. Incineration is accomplished by introducing ethyl alcohol fumes into a boiler air supply or by passing the fumes through a direct-flame after-burner. Absorption is accomplished by dissolving ethyl alcohol vapors in a selective liquid solvent. Consult AP-40 for further information on either control method (Ref. 3).

Profile Basis

The basis for Profile 3-02-009 was a survey of pertinent literature (Refs. 1, 2 and 4).

Data Qualification

The following profile may be applied to typical beer processing operations wherever grain fermentation occurs.

DECEMBER 14, 1978 TABLE 3-02-009 INDUSTRIAL PROCESS, FOOD/AGRICULTURE
FERMENTATION, BEER
DATA CONFIDENCE LEVEL: III

CONTROL DEVICE: NONE
PROCESS MODIFICATION: NONE
KVB PROFILE KEY 0211

LINE NO.	SAROAD CODE	CHEMICAL NAME	MOLECULAR WEIGHT	PERCENT WEIGHT	PERCENT VOLUME	CHEMICAL CLASSIFICATION
1	43302	ETHYL ALCOHOL	46.07	100.00	100.00	5 MISCELLANEOUS
		TOTAL		100.00	100.00	
	0	COMPOUNDS OF CLASSIFICATION 1	.00	.00	.00	
	0	COMPOUNDS OF CLASSIFICATION 2	.00	.00	.00	
	0	COMPOUNDS OF CLASSIFICATION 3	.00	.00	.00	
	0	COMPOUNDS OF CLASSIFICATION 4	.00	.00	.00	
	1	COMPOUNDS OF CLASSIFICATION 5	46.07	100.00	100.00	
	0	COMPOUNDS OF CLASSIFICATION 6	.00	00	.00	
	0	COMPOUNDS OF CLASSIFICATION 7	.00	.00	.00	
	1	COMPOUND COMPOSITE	46.07	100.00	100.00	

NOTES: A. METHOD: CALCULATIONS FROM COMPOSITE SURVEY DATA ENGINEERING EVALUATION OF LITERATURE DATA
B. REFERENCES: LITERATURE TEST DATA (REF. 1, 2 AND 4)
C. APPLICABLE SCC CATEGORIES: 3-02-009-03

REFERENCES

1. Formica, P. N., "Controlled and Uncontrolled Emission Rates and Applicable Limitations for Eighty Processes," prepared for EPA Office of Air Quality Planning and Standards, Research Triangle Park, NC, EPA 340/1-78-004, April 1978.

2. "Compilation of Pollutant Emission Factors," Environmental Protection Agency, Research Triangle Park, NC, AP-42, August 1977.

3. Danielson, J. A. (ed.), "Air Pollution Engineering Manual," Environmental Protection Agency, Research Triangle Park, NC, AP-40, May 1973.

4. Considine, D. M., (ed.), "Chemical and Process Technology Encyclopedia," McGraw-Hill Book Co., 1974.

3-03 INDUSTRIAL PROCESSES, PRIMARY METALS

Introduction

Primary metal operations refers to the production of metals from their ores. The primary metals industries include primary aluminum production, copper smelters, lead smelters, zinc smelters, iron and steel mills, ferroalloy production, and metallurgical coke manufacturers.

Metallurgical processes are some of the largest stationary point sources of pollution. However, compared to carbon monoxide, particulate and sulfur emissions, these sources generally emit small concentrations of VOC's. Coke manufacturing is an exception to this. VOC's are emitted from stacks as exhaust gas, from fuel combustion and as fugitive emissions, and from openings or leaks in material processing retorts.

3-03 INDUSTRIAL PROCESS, PRIMARY METALS

3-03-003 COKE METALLURGICAL BYPRODUCTS--GENERAL

Process Description[1]

Coking is the process of heating coal in an atmosphere of low oxygen content, i.e., destructive distillation. During this process, organic compounds in the coal break down to yield gases and a residue of relatively nonvolatile nature. Two processes are used for the manufacture of metallurgical coke, the by-product process and the beehive process. The by-product process accounts for more than 98% of the coke produced.

The by-product process is oriented toward the recovery of the gases produced during the coking cycle, whereas the volatile matter is vented to the atmosphere in the beehive process. The rectangular by-product ovens are grouped together in a series, alternately interspersed with heating flues, called a coke battery. Coal is charged to the ovens through ports in the top, which are then sealed. Heat is supplied to the ovens by burning some of the coke gas produced. Coking is largely accomplished at temperatures of 2000° to 2100° F (1100° to 1150° C) for a period of about 16 to 20 hours. At the end of the coking period, the coke is pushed from the oven by a ram and quenched with water.

Emissions[1]

Particulates, hydrocarbons, carbon monoxide, and other emissions originate from the following by-product coking operations: 1) charging of the coal into the incandescent ovens, 2) oven leakage during the coking period, 3) pushing the coke out of the ovens, and 4) quenching the hot coke. Gaseous emissions from the by-product ovens are drawn off to a collecting main and are subjected to various operations for separating ammonia, coke-oven gas, tar, phenol, light oil (benzene, toluene, xylene), and pyridine. These unit operations are potential sources of hydrocarbon emissions.

Oven-charging operations and leakage around poorly sealed coke-oven doors and lids are major sources of gaseous emissions from by-product ovens. The hydrocarbon emission factors for coking operations are summarized in Section 7.2 "Metallurgical Coke Manufacturing" of AP-42. (Ref. 2)

Controls[3]

Coke oven gas is produced as a by-product or co-product and is drawn off, collected and treated. Control schemes involve hoods and vents to collect fugitive emissions for adsorption or incineration depending on concentration. Coke oven gas is largely used for fuel in the many steel plant operations.

References 4 and 5 contain a description of the coking process and details of emission sources and control measures.

Profile Basis[6]

Field test samples were taken from two different coke oven stacks and a main header using gas collection bottles for grab samples. Gas analysis was by GC-MS technique.

Data Qualification

The following profile may be correctly applied to all by-product or co-product coke manufacturing processes to determine hydrocarbon emissions that may result from oven charging, oven pushing, quenching, unloading, underfiring or leakage.

DECEMBER 14, 1978 TABLE 3-03-003 INDUSTRIAL PROCESS, PRIMARY METALS , METALLURGICAL COKE MFG.
BY PRODUCT PROCESS, COKE OVEN STACK GAS
DATA CONFIDENCE LEVEL: III

CONTROL DEVICE: NONE
PROCESS MODIFICATION: NONE
KVB PROFILE KEY 0011

LINE NO.	SAROAD CODE	CHEMICAL NAME	MOLECULAR WEIGHT	PERCENT WEIGHT	PERCENT VOLUME	CHEMICAL CLASSIFICATION	
1	43204	PROPANE	44.09	.50	.25	1	PARAFFIN
2	43203	ETHYLENE	28.05	27.70	22.56	2	OLEFIN
3	43205	PROPYLENE	42.08	1.90	1.03	2	OLEFIN
4	43213	BUTENE	56.10	.10	.05	2	OLEFIN
5	43218	1,3-BUTADIENE	54.09	.50	.21	2	OLEFIN
6	45202	TOLUENE	92.13	.70	.18	3	AROMATIC
7	43206	ACETYLENE	26.04	1.20	1.05	5	MISCELLANEOUS
8	43201	METHANE	16.04	45.30	64.47	6	METHANE
9	43202	ETHANE	30.07	8.00	6.07	7	NON-REACTIVE
10	45201	BENZENE	78.11	14.10	4.13	7	NON-REACTIVE
		TOTAL		100.00	100.00		
	1	COMPOUNDS OF CLASSIFICATION 1	44.09	.50	.25		
	4	COMPOUNDS OF CLASSIFICATION 2	28.94	30.20	23.85		
	1	COMPOUNDS OF CLASSIFICATION 3	92.13	.70	.18		
	0	COMPOUNDS OF CLASSIFICATION 4	.00	.00	.00		
	1	COMPOUNDS OF CLASSIFICATION 5	26.04	1.20	1.05		
	1	COMPOUNDS OF CLASSIFICATION 6	16.04	45.30	64.47		
	2	COMPOUNDS OF CLASSIFICATION 7	49.52	22.10	10.20		
	10	COMPOUND COMPOSITE	22.84	100.00	100.00		

NOTES: A. METHOD: CALCULATIONS FROM COMPOSITE SURVEY DATA GC-MS ANALYSIS OF GRAB SAMPLE
B. REFERENCES: KVB TEST DATA (REF. 6) , AP-42 SECTION 7.2
C. APPLICABLE SCC CATEGORIES: 3-03-003-01,-02,-03,-04,-05,-06

REFERENCES

1. "Air Pollutant Emission Factors," Final Report. Resources Research, Inc., Reston, VA. Prepared for National Pollution Control Administration, Durham, NC, under Contract No. CPA-22-69-119. April 1970.

2. "Compilation of Air Pollutant Emission Factors," Environmental Protection Agency, Research Triangle Park, NC, AP-42, August 1977.

3. Shreve, R. N. and Brask, J. A., Jr., "Chemical Process Industries," Fourth Edition, McGraw-Hill Book Co., 1977.

4. California Air Resources Board, "Coke Oven Emissions, Miscellaneous Emissions, and their Control at Kaiser Steel Corporation's Fontana Steel Making Facility," Report L&E-76-11, November 1976.

5. Barnes, T. M., et al., "Evaluation of Process Alternatives to Improve Control of Air Pollution from Production of Coke," Battelle Memorial Institute, Columbus, OH, PB 189 266, January 1970.

6. Taback, H. J., et al., "Control of Hydrocarbon Emissions from Stationary Sources in the California South Coast Air Basin," Vol. I & II, KVB, Inc., Tustin, CA, June 1978.

3-03-008 IRON PRODUCTION--BLAST FURNACE --IRON SINTERING

Process Description[1,2]

Blast furnaces are tall refractory-lined furnaces using the countercurrent flow principle to achieve high efficiency. The raw materials which include iron ore as sinter or pellets, are charged at the top along with coke as a reducing and thermal agent and limestone for fluxing and gangue material. A hot-air blast introduced at the bottom end burns the coke to heat, reduce, and melt the charge as it descends. The liquid iron and slag collect on the furnace hearth and are tapped at regular intervals through separate tap holes.

The waste-blast furnace gas from the combustion of coke, which contains about 28% carbon monoxide and has a heating value of about 90 Btu/ft^3, is collected from the top of the furnace by a downcomer pipe, cleaned to remove the dust particles and used as a fuel. This waste gas is used with coke oven gas or oil for heating hot-blast stoves. The hot-blast stoves are vented to a common exhaust stack.

Emissions[3,4]

Compared to particulate and carbon monoxide, the VOC emission from the blast-furnace hot-blast stoves is very small (0.7 lb/hr of total hydrocarbon for a stack gas flow of 55,000 SCFM at 550°F).

Hydrocarbon emissions from iron sintering, however, are considerably more, 15 lb/hr of total hydrocarbons for a stack gas flow of 152,400 SCFM at 320°F.

Emission factors for particulates and carbon monoxide are contained in Section 7.5 "Iron and Steel Mills," of AP-42. Section 7.5 does not have emissions factors for VOC's.

Controls[3]

Because of the low VOC concentration in the exhaust gases of blast furnaces, control equipment is not practical.

Profile Basis[3]

Profiles in Tables 3-03-008 A and B were based on one grab sample each taken from the exhaust of a blast-furnace and sintering plant respectively. Both samples were analyzed by GC-MS analysis (Ref. 3).

Data Qualification

The following profiles may be used for iron production processes. One profile is for blast furnace ore charging and agglomerate charging, and the other profile is for iron sintering operations.

DECEMBER 14, 1978 TABLE 3-03-008A INDUSTRIAL PROCESS, PRIMARY METALS, IRON PRODUCTION
BLAST FURNACE ORE CHARGING AND AGGLOMERATE CHARGING
DATA CONFIDENCE LEVEL: III

CONTROL DEVICE: NONE
PROCESS MODIFICATION: NONE
KVB PROFILE KEY 0012

LINE NO.	SAROAD CODE	CHEMICAL NAME	MOLECULAR WEIGHT	PERCENT WEIGHT	PERCENT VOLUME	CHEMICAL CLASSIFICATION
1	43822	TRIMETHYLFLUOROSILANE	92.00	84.20	48.16	5 MISCELLANEOUS
2	43201	METHANE	16.04	15.80	51.84	6 METHANE
		TOTAL		100.00	100.00	
	0	COMPOUNDS OF CLASSIFICATION 1	.00	.00	.00	
	0	COMPOUNDS OF CLASSIFICATION 2	.00	.00	.00	
	0	COMPOUNDS OF CLASSIFICATION 3	.00	.00	.00	
	0	COMPOUNDS OF CLASSIFICATION 4	.00	.00	.00	
	1	COMPOUNDS OF CLASSIFICATION 5	92.00	84.20	48.16	
	1	COMPOUNDS OF CLASSIFICATION 6	16.04	15.80	51.84	
	0	COMPOUNDS OF CLASSIFICATION 7	.00	.00	.00	
	2	COMPOUND COMPOSITE	52.62	100.00	100.00	

NOTES: A. METHOD: CALCULATIONS FROM COMPOSITE SURVEY DATA GC-MS ANALYSIS OF GRAB SAMPLE
B. REFERENCES: KVB TEST DATA (REF. 3)
C. APPLICABLE SCC CATEGORIES: 3-03-008-01,-02

DECEMBER 14, 1978 TABLE 3-03-008B INDUSTRIAL PROCESS, PRIMARY METALS
IRON SINTERING
DATA CONFIDENCE LEVEL: III

CONTROL DEVICE: NONE
PROCESS MODIFICATION: NONE
KVB PROFILE KEY 0013

LINE NO.	SAROAD CODE	CHEMICAL NAME	MOLECULAR WEIGHT	PERCENT WEIGHT	PERCENT VOLUME	CHEMICAL CLASSIFICATION
1	43203	ETHYLENE	28.05	5.90	3.81	2 OLEFIN
2	43205	PROPYLENE	42.08	3.00	1.29	2 OLEFIN
3	43206	ACETYLENE	26.04	14.80	10.29	5 MISCELLANEOUS
4	43201	METHANE	16.04	73.30	82.80	6 METHANE
5	43202	ETHANE	30.07	3.00	1.81	7 NON-REACTIVE
		TOTAL		100.00	100.00	
	0	COMPOUNDS OF CLASSIFICATION 1	.00	.00	.00	
	2	COMPOUNDS OF CLASSIFICATION 2	31.60	8.90	5.10	
	0	COMPOUNDS OF CLASSIFICATION 3	.00	.00	.00	
	0	COMPOUNDS OF CLASSIFICATION 4	.00	.00	.00	
	1	COMPOUNDS OF CLASSIFICATION 5	26.04	14.80	10.29	
	1	COMPOUNDS OF CLASSIFICATION 6	16.04	73.30	82.80	
	1	COMPOUNDS OF CLASSIFICATION 7	30.07	3.00	1.81	
	5	COMPOUND COMPOSITE	18.12	100.00	100.00	

NOTES: A. METHOD: CALCULATIONS FROM COMPOSITE SURVEY DATA GC-MS ANALYSIS OF GRAB SAMPLES
B. REFERENCES: KVB TEST DATA (REF. 3)
C. APPLICABLE SCC CATEGORIES: 3-03-008-03

REFERENCES

1. Considine, D. M., editor, "Chemical and Process Technology Encyclopedia," McGraw-Hill Book Co., 1974.

2. "Ferroalloys, Steels, All-purpose Additives," The Magazine of Metals Producing, February 1967.

3. Taback, H. J., et al., "Control of Hydrocarbon Emissions from Stationary Sources in the California South Coast Air Basin," Vol. I & II, KVB, Inc., Tustin, CA, June 1978.

4. "Compilation of Air Pollutant Emission Factors," Environmental Protection Agency, Research Triangle Park, NC, AP-42, August 1977.

3-03-009 STEEL PRODUCTION--OPEN HEARTH FURNACE --BASIC OXYGEN FURNACE

Process Description[1,2]

Steel can be made by using: 1) liquid iron as the main constituent of the charge, 2) steel scrap as the main constituent of the charge, 3) pre-reduced sponge iron, and 4) a mixture of liquid iron, scrap and sponge iron.

A number of processes are available using external fuel in the form of gas, oil, electric power or chemical heat produced by exothermic reactions of metalloids (e.g., C, Si, Mn and P) contained in the charge material to make steel.

Open-hearth furnaces--In the open hearth process, a mixture of scrap iron, steel and pig iron is melted in a shallow rectangular basin, or "Hearth" for which various liquid gaseous fuels provide the heat. The basic open hearth can handle almost any type of metallic charge. The Ajax process, which uses modified tilting-type open-hearth furnaces, can refine 100% hot metal charges with oxygen.

Basic Oxygen Furnaces (BOF)--The basic oxygen process, also called the Linz-Donawitz (LD) process is employed to produce steel from a furnace charge of approximately 70% molten blast-furnace metal and 30% scrap metal by use of a stream of commercially pure oxygen to oxidize the impurities, principally carbon and silicon.

Emissions[3]

Air contaminants are emitted from both the open-hearth furnace and the basic oxygen furnace throughout the process, or heat. Hydrocarbon emissions result from steel scrap, which contains grease, oil or other combustible material and from the furnace fuel.

Total hydrocarbon emissions for an open-hearth furnace at the precipitator outlet were 3.02 lbs/hour for a gas flow rate of 33,000 SCFM at 490°F.

On a basic oxygen furnace, the total hydrocarbon emissions at the precipitator outlet were 6.42 lbs/hour for a gas flow rate of 240,900 SCFM at 200 - 275°F.

Emission factors for particulates, carbon monoxide and fluorides are contained in Section 7.5 "Iron and Steel Mills," of AP-42. Section 7.5 does not have emission factors for hydrocarbons.

Controls[3]

Electrostatic precipitators are installed on both open-hearth and basic oxygen furnaces for particulate control purposes. For the open-hearth furnace, the precipitator control efficiency for hydrocarbons was 25%. Control efficiency for hydrocarbons was not determined for the BOF precipitator installation.

Profile Basis[3]

For the open-hearth furnace, one grab sample by gas collection bottle was made of both the precipitator inlet and outlet. On the BOF, only one grab sample was made at the precipitator outlet.

Plant operation for both furnaces was 24 hours/day, 360 days/year.

Data Qualification

The following profiles may be used for steel making open-hearth and BOF processes. There are two profiles for the open-hearth furnace, one without control and one with control.

DECEMBER 14, 1978 TABLE 3-03-009A INDUSTRIAL PROCESS, PRIMARY METALS, STEEL PRODUCTION
OPEN HEARTH WITH OXYGEN LANCE
DATA CONFIDENCE LEVEL: III

CONTROL DEVICE: NONE
PROCESS MODIFICATION: NONE
KVB PROFILE KEY 0306

LINE NO.	SAROAD CODE	CHEMICAL NAME	MOLECULAR WEIGHT	PERCENT WEIGHT	PERCENT VOLUME	CHEMICAL CLASSIFICATION	
1	43231	N-HEXANE	86.17	1.67	1.74	1	PARAFFIN
2	43232	N-HEPTANE	100.20	6.86	6.34	1	PARAFFIN
3	45202	TOLUENE	92.13	4.56	4.59	3	AROMATIC
4	43822	TRIMETHYLFLUOROSILANE	92.00	83.86	83.75	5	MISCELLANEOUS
5	45201	BENZENE	78.11	3.05	3.58	7	NON-REACTIVE
		TOTAL		100.00	100.00		
	2	COMPOUNDS OF CLASSIFICATION 1	97.18	8.53	8.08		
	0	COMPOUNDS OF CLASSIFICATION 2	.00	.00	.00		
	1	COMPOUNDS OF CLASSIFICATION 3	92.13	4.56	4.59		
	0	COMPOUNDS OF CLASSIFICATION 4	.00	.00	.00		
	1	COMPOUNDS OF CLASSIFICATION 5	92.00	83.86	83.75		
	0	COMPOUNDS OF CLASSIFICATION 6	.00	.00	.00		
	1	COMPOUNDS OF CLASSIFICATION 7	78.11	3.05	3.58		
	5	COMPOUND COMPOSITE	91.93	100.00	100.00		

NOTES: A. METHOD: CALCULATIONS FROM COMPOSITE SURVEY DATA GC-MS ANALYSIS OF GRAB SAMPLE
B. REFERENCES: KVB TEST DATA (REF. 3)
C. APPLICABLE SCC CATEGORIES: 3-03-009-01

DECEMBER 14, 1978 TABLE 3-03-009B INDUSTRIAL PROCESS, PRIMARY METALS, STEEL PRODUCTION
OPEN HEARTH WITH OXYGEN LANCE, CONTROLLED
DATA CONFIDENCE LEVEL: III

CONTROL DEVICE: ELECTROSTATIC PRECIPITATOR
PROCESS MODIFICATION: NONE
KVB PROFILE KEY 0014

LINE NO.	SAROAD CODE	CHEMICAL NAME	MOLECULAR WEIGHT	PERCENT WEIGHT	PERCENT VOLUME	CHEMICAL CLASSIFICATION	
1	43231	N-HEXANE	86.17	7.00	7.46	1	PARAFFIN
2	43232	N-HEPTANE	100.20	35.80	32.87	1	PARAFFIN
3	45202	TOLUENE	92.13	3.60	3.59	3	AROMATIC
4	43822	TRIMETHYLFLUOROSILANE	92.00	40.00	40.06	5	MISCELLANEOUS
5	45201	BENZENE	78.11	13.60	16.02	7	NON-REACTIVE
		TOTAL		100.00	100.00		
	2	COMPOUNDS OF CLASSIFICATION 1	97.60	42.80	40.33		
	0	COMPOUNDS OF CLASSIFICATION 2	.00	.00	.00		
	1	COMPOUNDS OF CLASSIFICATION 3	92.13	3.60	3.59		
	0	COMPOUNDS OF CLASSIFICATION 4	.00	.00	.00		
	1	COMPOUNDS OF CLASSIFICATION 5	92.00	40.00	40.06		
	0	COMPOUNDS OF CLASSIFICATION 6	.00	.00	.00		
	1	COMPOUNDS OF CLASSIFICATION 7	78.11	13.60	16.02		
	5	COMPOUND COMPOSITE	92.04	100.00	100.00		

NOTES: A. METHOD: CALCULATIONS FROM COMPOSITE SURVEY DATA QC-MS ANALYSIS OF GRAB SAMPLE
B. REFERENCES: KVB TEST DATA (REF. 3)
C. APPLICABLE SCC CATEGORIES: 3-03-009-01

DECEMBER 14, 1978 TABLE 3-03-009C INDUSTRIAL PROCESS, PRIMARY METALS, STEEL PRODUCTION
BASIC OXYGEN FURNACE
DATA CONFIDENCE LEVEL: III

CONTROL DEVICE: ELECTROSTATIC PRECIPITATOR
PROCESS MODIFICATION: NONE
KVB PROFILE KEY 0016

LINE NO.	SAROAD CODE	CHEMICAL NAME	MOLECULAR WEIGHT	PERCENT WEIGHT	PERCENT VOLUME	CHEMICAL CLASSIFICATION	
1	43204	PROPANE	44.09	39.90	42.49	1	PARAFFIN
2	43822	TRIMETHYLFLUOROSILANE	92.00	49.00	25.02	5	MISCELLANEOUS
3	43201	METHANE	16.04	11.10	32.49	6	METHANE
		TOTAL		100.00	100.00		
	1	COMPOUNDS OF CLASSIFICATION 1	44.09	39.90	42.49		
	0	COMPOUNDS OF CLASSIFICATION 2	.00	.00	.00		
	0	COMPOUNDS OF CLASSIFICATION 3	.00	.00	.00		
	0	COMPOUNDS OF CLASSIFICATION 4	.00	.00	.00		
	1	COMPOUNDS OF CLASSIFICATION 5	92.00	49.00	25.02		
	1	COMPOUNDS OF CLASSIFICATION 6	16.04	11.10	32.49		
	0	COMPOUNDS OF CLASSIFICATION 7	.00	.00	.00		
	3	COMPOUND COMPOSITE	46.96	100.00	100.00		

NOTES: A. METHOD: CALCULATIONS FROM COMPOSITE SURVEY DATA QC-MS ANALYSIS OF GRAB SAMPLE
B. REFERENCES: KVB TEST DATA (REF. 3)
C. APPLICABLE SCC CATEGORIES: 3-03-009-03

REFERENCES

1. Considine, D. M., editor, "Chemical and Process Technology Encyclopedia," McGraw Hill Book Co., 1974.

2. "Compilation of Air Pollutant Emission Factors," Environmental Protection Agency, Research Triangle Park, NC, AP-42, August 1977.

3. Taback, J. H., et al., "Control of Hydrocarbon Emisions from Stationary Sources in the California South Coast Air Basin," Vol. I & II, KVB, Inc., Tustin, CA, June 1978.

3-05-001 ASPHALT ROOFING--BLOWING
--FELT SATURATORS: SPRAYING AND DIPPING
--HOT ASPHALT OIL STORAGE
--TAR KETTLES

Process Description[1]

The manufacture of asphalt roofing felts and shingles involves saturating fiber media with hot asphalt (400-450 °F) by means of dipping and/or spraying. Although it is not always done at the same site, preparation of the asphalt saturant is an integral part of the operation. This preparation, called "blowing," consists of oxidizing the asphalt by bubbling air through the liquid asphalt for 8 to 16 hours. The saturant is then transported to the saturation tank or spray area. The saturation of the felts is accomplished by dipping, high-pressure sprays, or both. The final felts are made in various weights: 15, 30, and 55 pounds per 100 square feet (0.72, 1.5, and 2.7 kg/m^2). Regardless of the weight of the final product, the makeup is approximately 40 percent dry felt and 60 percent asphalt saturant.

AP 40 presents a thorough discussion of a typical asphalt roofing line (Ref. 2).

Emissions

Candidate process areas of hydrocarbon emissions from asphalt roofing operations are:

- Felt Saturators: Spraying and Dipping
- Air Blowing
- Hot Asphalt Storage
- Tar Kettles (portable field type)

VOC emissions generally increase directly with increasing line speed, felt moisture content, air temperature and humidity, number of spray headers and gates in operation and the asphalt temperature (Ref. 2). Profiles 3-05-001B and C present the estimated organic species emanating from uncontrolled operations (Ref. 4).

Air Blowing[2,3]--VOC emissions from the asphalt air blowing stills include oxygen, nitrogen and its compounds, water vapor, sulfur compounds, and hydrocarbons as gases, odors, and aerosols.

The following table presents uncontrolled and controlled emissions and limitations from asphalt roofing manufacturing.

HYDROCARBON EMISSIONS FROM ASPHALT ROOFING MANUFACTURE

Type of Operation and Control	% Control	Hydrocarbon Emissions (CH_4) (Based on 210,000 tons/yr)			
		lbs/ton*	kg/mt	lbs/hr	kg/hr
Asphalt Blowing, uncontrolled	0	2.5	1.25	60.0	27.22
Asphalt Blowing, with afterburner	99	0.025	0.0125	0.60	0.27

*Ton of Asphalt blown
Source: Reference 3

Profile 3-05-001A presents the estimated organic species eminating from an uncontrolled, asphalt blowing still.

Hot Asphalt Oil Storage--Hydrocarbon emission rates from the storage of hot asphalt oil can be calculated based on the information contained in the API Bulletin on "Petrochemical Evaporation Loss from Storage Tanks," (Ref. API Bulletin 2523) and Section 4.3 of AP-42. The VOC species for asphalt storage emissions is estimated to be identical to that of Profile 3-05-001B.

Roofing Tar Kettles--Emissions from portable roofing tar kettles are the direct result of the heating and subsequent thermal cracking and vaporization of low-boiling-point hydrocarbon oils. Emission rates of 1.9×10^3 lbs HC/hour have been estimated (Ref. 4). Speciation of the volatile organic emissions is presented in Profile 3-05-001D.

Controls[2,4]

Felt Saturators: Spraying and Dipping--As stated earlier, a reduction of those items directly related to increasing emission rates is one form of control which may, however, by uneconomical. The most common form of control

is to equip the saturator machinery with a canopy type hood or room enclosure. The contaminated air which is ventilated from the canopy or room enclosure is then vented through a direct-fired afterburner capable of reaching an exhaust temperature to 1500 °F.

The recent concern for energy conservation and the periodic unavailability of natural gas required to operate an afterburner has resulted in the usage of glass fiber mats. Effluent from the roofing plant saturators pass through a slowly moving unrolled mat of glass fiber. The exhaust gases cool and coalesce as they go across the mat and impinge on the mat surface. For a thorough explanation of control methods, consult AP-40, Reference 2.

Asphalt Blowing[2]--Control of effluent organic vapors from asphalt airblowing stills has been accomplished mainly by wet scrubbing (Venturi-type) and/or by direct-fired incineration. For a thorough explanation of control methods, consult AP-40, Reference 2.

Tar Kettle[4]--Emission control is difficult due to the portable-in-field nature of operation.

Three possible areas for control are:

- Improved temperature control to prevent unnecessary asphalt heating
- Improved loading devices to cut down on the time the hood is opened
- General maintenance to keep hood in a good closing (sealing) condition.

Profile Basis[4,5]

The organic species data presented in Profiles 3-05-001A, B and C represent an engineering evaluation (Ref. 5) of similar asphalt operations from field tests conducted by KVB. Profile 3-05-001D represents actual field tests data. A gas sample was taken by means of a gas collecting bottle and NIOSH type charcoal tubes on a roofing tar kettle.

Data Qualification

Profiles 3-05-001A, B and C may be used to characterize emissions from asphalt felt saturators and asphalt blowing stills less controls. Profile 3-05-001D represents actual test data on a roofing tar kettle and is designed to be used as such.

DECEMBER 14, 1978 TABLE 3-05-001A INDUSTRIAL PROCESS, MINERAL PRODUCTS
ASPHALT ROOFING, BLOWING OPERATION
DATA CONFIDENCE LEVEL: IV

CONTROL DEVICE: NONE
PROCESS MODIFICATION: NONE
KVB PROFILE KEY 0021

LINE NO.	SAROAD CODE	CHEMICAL NAME	MOLECULAR WEIGHT	PERCENT WEIGHT	PERCENT VOLUME	CHEMICAL CLASSIFICATION	
1	43105	ISOMERS OF HEXANE	86.17	1.80	2.16	1	PARAFFIN
2	43106	ISOMERS OF HEPTANE	100.20	3.60	3.71	1	PARAFFIN
3	43231	N-HEXANE	86.17	1.80	2.16	1	PARAFFIN
4	43232	N-HEPTANE	100.20	15.80	16.27	1	PARAFFIN
5	43233	N-OCTANE	114.23	74.50	67.15	1	PARAFFIN
6	43502	FORMALDEHYDE	30.03	2.50	8.55	4	CARBONYL
		TOTAL		100.00	100.00		
	5	COMPOUNDS OF CLASSIFICATION 1	109.84	97.50	91.45		
	0	COMPOUNDS OF CLASSIFICATION 2	.00	.00	.00		
	0	COMPOUNDS OF CLASSIFICATION 3	.00	.00	.00		
	1	COMPOUNDS OF CLASSIFICATION 4	30.03	2.50	8.55		
	0	COMPOUNDS OF CLASSIFICATION 5	.00	.00	.00		
	0	COMPOUNDS OF CLASSIFICATION 6	.00	.00	.00		
	0	COMPOUNDS OF CLASSIFICATION 7	.00	.00	.00		
	6	COMPOUND COMPOSITE	103.02	100.00	100.00		

NOTES: A. METHOD: CALCULATIONS FROM COMPOSITE SURVEY DATA ENGINEERING EVALUATION OF LITERATURE DATA
B. REFERENCES: T.W. SONNICHSEN, KVB ENGINEER
C. APPLICABLE SCC CATEGORIES: 3-05-001-01

DECEMBER 14, 1978 TABLE 3-05-0018 INDUSTRIAL PROCESS, MINERAL PRODUCTS
ASPHALT ROOFING, DIPPING
DATA CONFIDENCE LEVEL: IV

CONTROL DEVICE: NONE
PROCESS MODIFICATION: NONE
KVB PROFILE KEY 0022

LINE NO.	SAROAD CODE	CHEMICAL NAME	MOLECULAR WEIGHT	PERCENT WEIGHT	PERCENT VOLUME	CHEMICAL CLASSIFICATION	
1	43105	ISOMERS OF HEXANE	86.17	12.00	9.16	1	PARAFFIN
2	43106	ISOMERS OF HEPTANE	100.20	11.00	7.25	1	PARAFFIN
3	43107	ISOMERS OF OCTANE	114.23	1.00	.59	1	PARAFFIN
4	43204	PROPANE	44.09	13.00	19.43	1	PARAFFIN
5	43212	N-BUTANE	58.12	18.00	20.42	1	PARAFFIN
6	43214	ISOBUTANE	58.12	8.00	9.09	1	PARAFFIN
7	43220	N-PENTANE	72.15	18.00	16.47	1	PARAFFIN
8	43231	N-HEXANE	86.17	2.00	1.52	1	PARAFFIN
9	43232	N-HEPTANE	100.20	14.00	9.22	1	PARAFFIN
10	43203	ETHYLENE	28.05	2.00	4.68	2	OLEFIN
11	43202	ETHANE	30.07	1.00	2.17	7	NON-REACTIVE
		TOTAL		100.00	100.00		
	9	COMPOUNDS OF CLASSIFICATION 1	68.69	97.00	93.15		
	1	COMPOUNDS OF CLASSIFICATION 2	28.05	2.00	4.68		
	0	COMPOUNDS OF CLASSIFICATION 3	.00	.00	.00		
	0	COMPOUNDS OF CLASSIFICATION 4	.00	.00	.00		
	0	COMPOUNDS OF CLASSIFICATION 5	.00	.00	.00		
	0	COMPOUNDS OF CLASSIFICATION 6	.00	.00	.00		
	1	COMPOUNDS OF CLASSIFICATION 7	30.07	1.00	2.17		
	11	COMPOUND COMPOSITE	65.95	100.00	100.00		

NOTES: A. METHOD: CALCULATIONS FROM COMPOSITE SURVEY DATA ENGINEERING EVALUATION OF TEST DATA
B. REFERENCES: KVB TEST DATA (REF. 4)
C. APPLICABLE SCC CATEGORIES: 3-05-001-02,-04

DECEMBER 14, 1978 TABLE 3-05-001C INDUSTRIAL PROCESS, MINERAL PRODUCTS
ASPHALT ROOFING, SPRAYING
DATA CONFIDENCE LEVEL: IV

CONTROL DEVICE: NONE
PROCESS MODIFICATION: NONE
KVB PROFILE KEY 0023

LINE NO.	SAROAD CODE	CHEMICAL NAME	MOLECULAR WEIGHT	PERCENT WEIGHT	PERCENT VOLUME	CHEMICAL CLASSIFICATION	
1	43105	ISOMERS OF HEXANE	86.17	12.00	9.16	1	PARAFFIN
2	43106	ISOMERS OF HEPTANE	100.20	11.00	7.25	1	PARAFFIN
3	43107	ISOMERS OF OCTANE	114.23	1.00	.59	1	PARAFFIN
4	43204	PROPANE	44.09	13.00	19.43	1	PARAFFIN
5	43212	N-BUTANE	58.12	18.00	20.42	1	PARAFFIN
6	43214	ISOBUTANE	58.12	8.00	9.09	1	PARAFFIN
7	43220	N-PENTANE	72.15	18.00	16.47	1	PARAFFIN
8	43231	N-HEXANE	86.17	2.00	1.52	1	PARAFFIN
9	43232	N-HEPTANE	100.20	14.00	9.22	1	PARAFFIN
10	43203	ETHYLENE	28.05	2.00	4.68	2	OLEFIN
11	43202	ETHANE	30.07	1.00	2.17	7	NON-REACTIVE
		TOTAL		100.00	100.00		
	9	COMPOUNDS OF CLASSIFICATION 1	68.69	97.00	93.15		
	1	COMPOUNDS OF CLASSIFICATION 2	28.05	2.00	4.68		
	0	COMPOUNDS OF CLASSIFICATION 3	.00	.00	.00		
	0	COMPOUNDS OF CLASSIFICATION 4	.00	.00	.00		
	0	COMPOUNDS OF CLASSIFICATION 5	.00	.00	.00		
	0	COMPOUNDS OF CLASSIFICATION 6	.00	.00	.00		
	1	COMPOUNDS OF CLASSIFICATION 7	30.07	1.00	2.17		
	11	COMPOUND COMPOSITE	65.95	100.00	100.00		

NOTES: A. METHOD: CALCULATIONS FROM COMPOSITE SURVEY DATA ENGINEERING EVALUATION OF TEST DATA
B. REFERENCES: KVB TEST DATA (REF. 4)
C. APPLICABLE SCC CATEGORIES: 3-05-001-03

DECEMBER 14, 1978 TABLE 3-05-001D INDUSTRIAL PROCESS, MINERAL PRODUCTS
ASPHALT ROOFING, TAR KETTLE
DATA CONFIDENCE LEVEL: III

CONTROL DEVICE: NONE
PROCESS MODIFICATION: NONE
KVB PROFILE KEY 0024

LINE NO.	SAROAD CODE	CHEMICAL NAME	MOLECULAR WEIGHT	PERCENT WEIGHT	PERCENT VOLUME	CHEMICAL CLASSIFICATION	
1	43105	ISOMERS OF HEXANE	86.17	3.40	1.53	1	PARAFFIN
2	43107	ISOMERS OF OCTANE	114.23	7.40	2.49	1	PARAFFIN
3	43115	C-7 CYCLOPARAFFINS	98.19	2.90	1.15	1	PARAFFIN
4	43116	C-8 CYCLOPARAFFINS	112.23	.40	.15	1	PARAFFIN
5	43117	C-9 CYCLOPARAFFINS	126.26	1.50	.46	1	PARAFFIN
6	43122	ISOMERS OF PENTANE	72.15	1.10	.57	1	PARAFFIN
7	43204	PROPANE	44.09	10.20	8.85	1	PARAFFIN
8	43212	N-BUTANE	58.12	11.60	7.67	1	PARAFFIN
9	43214	ISOBUTANE	58.12	.70	.46	1	PARAFFIN
10	43220	N-PENTANE	72.15	6.30	3.33	1	PARAFFIN
11	43231	N-HEXANE	86.17	4.90	2.18	1	PARAFFIN
12	43232	N-HEPTANE	100.20	2.00	.77	1	PARAFFIN
13	43233	N-OCTANE	114.23	2.70	.92	1	PARAFFIN
14	43242	CYCLOPENTANE	70.14	2.50	1.38	1	PARAFFIN
15	43121	ISOMERS OF PENTENE	70.13	.50	.27	2	OLEFIN
16	43203	ETHYLENE	28.05	.30	.42	2	OLEFIN
17	43205	PROPYLENE	42.08	2.00	1.84	2	OLEFIN
18	43213	BUTENE	56.10	7.00	4.79	2	OLEFIN
19	43224	1-PENTENE	70.13	3.20	1.76	2	OLEFIN
20	45202	TOLUENE	92.13	1.90	.80	3	AROMATIC
21	43201	METHANE	16.04	21.30	50.90	6	METHANE
22	43202	ETHANE	30.07	5.40	6.90	7	NON-REACTIVE
23	45201	BENZENE	78.11	.80	.38	7	NON-REACTIVE
		TOTAL		100.00	99.97		
	14	COMPOUNDS OF CLASSIFICATION 1	69.42	57.60	31.91		
	5	COMPOUNDS OF CLASSIFICATION 2	55.10	13.00	9.08		
	1	COMPOUNDS OF CLASSIFICATION 3	92.13	1.90	.80		
	0	COMPOUNDS OF CLASSIFICATION 4	.00	.00	.00		
	0	COMPOUNDS OF CLASSIFICATION 5	.00	.00	.00		
	1	COMPOUNDS OF CLASSIFICATION 6	16.04	21.30	50.90		
	2	COMPOUNDS OF CLASSIFICATION 7	32.58	6.20	7.28		
	23	COMPOUND COMPOSITE	38.44	100.00	99.97		

NOTES: A. METHOD: CALCULATIONS FROM COMPOSITE SURVEY DATA GC-MS ANALYSIS OF SAMPLING TRAIN CATCH IN HOOD
B. REFERENCES: KVB TEST DATA (REF. 4)
C. APPLICABLE SCC CATEGORIES: 3-05-001-99

REFERENCES

1. "Compilation of Air Pollution Emission Factors," Supplements 1-8, Publication AP-42, EPA, April 1977.

2. "Air Pollution Engineering Manual," Environmental Protection Agency, Research Triangle Park, NC, AP-40, May 1973.

3. Formica, P. N., "Controlled and Uncontrolled Emission Rates and Applicable Limitations for Eighty Processes," Prepared for EPA Office of Air Quality Planning and Standards, Research Triangle Park, NC, EPA 340/1-78-004, April 1978.

4. Taback, H. J., et al., "Control of Hydrocarbon Emissions from Stationary Sources in the California South Coast Air Basin," Vols. I and II, KVB, Inc., Tustin, CA, June 1978.

5. Sonnichsen, T. W., KVB Engineer.

3-05-002 ASPHALTIC CONCRETE--ROTARY DRYER --MIXING-LOADING --ASPHALT OIL STORAGE

Process Description[1,2]

Hot-mix asphalt paving consists of a combination of aggregates uniformly mixed and coated with asphaltic cement. A typical hot-mix paving plant generally consists of an oil- or gas-fired rotary dryer, a screening and classifying system, a weighing system for asphalt cement and aggregate, a mixer, and the necessary material handling equipment.

Asphaltic cement is normally used in amounts of 3 to 12 percent by weight of refined petroleum.

Emissions[1,2]

Candidate process areas for the emission of hydrocarbon vapors to the atmosphere are:

- Rotary Dryer
- Asphalt-Aggregate Mixer
- Truck Loading Area
- Asphalt Oil Storage

Hydrocarbon emissions from the rotary gas- or oil-fired dryer are the result of the incomplete combustion of the fuel fired. Emission rates are estimated to be equivalent to those listed in AP-42 under, Combustion of Fuels. Profile 3-05-002A presents the estimated organic species breakdown of the flue gas for a natural gas fired unit. For an oil fired unit, refer to Profiles 1-01-004 and 1-01-005.

Hydrocarbon emissions from the asphalt-aggregate mixer and truck loading area are the result of the vaporization of the low boiling point hydrocarbon oils, however, their emission rates were not available at the time this report was written. A sample of the vapor coming off of a pile of compacted road asphalt was taken and analyzed for hydrocarbon species. The results are presented in Profile 3-05-002B.

Hydrocarbon emission rates for hot asphalt storage tanks can be computed from information contained within API Bulletin 2523. Speciation is similar to that presented in Profile 3-05-001B.

Controls[1,2]

Hydrocarbon emissions from hot asphalt batch plants are not generally considered to be a major air pollution problem. Unburned or partially burned hydrocarbons emanating from the rotary dryer can usually be reduced considerably by improving combustion efficiency. Hydrocarbon emissions from asphalt oil storage, mixing and asphaltic cement loading can be vented into a venturi type wet scrubber, direct-fired afterburner, or introduced in with the rotary dryer's combustion air supply. AP-40 offers an excellent explanation of the various ways gaseous pollutants can be controlled (Ref. 2)

Profile Basis[3]

The organic species data presented in Profile 3-05-002A represents an engineering evaluation of similar test data on a natural gas fired boiler using gas collecting bottles and NIOSH type charcoal tubes. Profile 3-05-002B represents a laboratory test performed on a sample of road asphalt. A gas collecting bottle and NIOSH type charcoal tubes were also used to obtain a gas sample for analysis.

Data Qualification

Profiles 3-05-002A, 1-01-004 and 1-01-005 represent similar situations regarding fuel combustion data for dryers. Profile 3-05-002B represents a specific situation found at a hot asphalt batch plant. The introduction of a control device affecting hydrocarbon emissions could also effect the emitted species as well as rate and should be taken into account. All presented profiles here represent uncontrolled emissions.

DECEMBER 14, 1978 TABLE 3-05-002A INDUSTRIAL PROCESS, MINERAL PRODUCTS
ASPHALT CONCRETE, ROTARY DRYER, NATURAL GAS FIRED
DATA CONFIDENCE LEVEL: IV

CONTROL DEVICE: NONE
PROCESS MODIFICATION: NONE
KVB PROFILE KEY 0025

LINE NO.	SAROAD CODE	CHEMICAL NAME	MOLECULAR WEIGHT	PERCENT WEIGHT	PERCENT VOLUME	CHEMICAL CLASSIFICATION	
1	43105	ISOMERS OF HEXANE	86.17	1.00	.28	1	PARAFFIN
2	43122	ISOMERS OF PENTANE	72.15	9.00	2.90	1	PARAFFIN
3	43204	PROPANE	44.09	4.00	2.11	1	PARAFFIN
4	43212	N-BUTANE	58.12	9.00	3.60	1	PARAFFIN
5	43220	N-PENTANE	72.15	6.00	1.93	1	PARAFFIN
6	43248	CYCLOHEXANE	84.16	1.00	.28	1	PARAFFIN
7	45202	TOLUENE	92.13	2.00	.51	3	AROMATIC
8	43502	FORMALDEHYDE	30.03	8.00	6.17	4	CARBONYL
9	43201	METHANE	16.04	56.00	81.04	6	METHANE
10	45201	BENZENE	78.11	4.00	1.18	7	NON-REACTIVE
		TOTAL		100.00	100.00		
	6	COMPOUNDS OF CLASSIFICATION 1	62.92	30.00	11.10		
	0	COMPOUNDS OF CLASSIFICATION 2	.00	.00	.00		
	1	COMPOUNDS OF CLASSIFICATION 3	92.13	2.00	.51		
	1	COMPOUNDS OF CLASSIFICATION 4	30.03	8.00	6.17		
	0	COMPOUNDS OF CLASSIFICATION 5	.00	.00	.00		
	1	COMPOUNDS OF CLASSIFICATION 6	16.04	56.00	81.04		
	1	COMPOUNDS OF CLASSIFICATION 7	78.11	4.00	1.18		
	10	COMPOUND COMPOSITE	23.23	100.00	100.00		

NOTES: A. METHOD: CALCULATIONS FROM COMPOSITE SURVEY DATA ENGINEERING EVALUATION OF SIMILAR TEST DATA
B. REFERENCES: T.W. SONNICHSEN, KVB ENGINEER
C. APPLICABLE SCC CATEGORIES: 3-05-002-01

DECEMBER 14, 1978 TABLE 3-05-002B INDUSTRIAL PROCESS, MINERAL PRODUCTS, ASPHALTIC CONCRETE
IN PLACE ROAD ASPHALT
DATA CONFIDENCE LEVEL: II

CONTROL DEVICE: NONE
PROCESS MODIFICATION: NONE
KVB PROFILE KEY 0026

LINE NO.	SAROAD CODE	CHEMICAL NAME	MOLECULAR WEIGHT	PERCENT WEIGHT	PERCENT VOLUME	CHEMICAL CLASSIFICATION	
1	43105	ISOMERS OF HEXANE	86.17	8.10	3.91	1	PARAFFIN
2	43115	C-7 CYCLOPARAFFINS	98.19	3.70	1.58	1	PARAFFIN
3	43122	ISOMERS OF PENTANE	72.15	5.70	3.29	1	PARAFFIN
4	43204	PROPANE	44.09	5.50	5.20	1	PARAFFIN
5	43212	N-BUTANE	58.12	10.10	7.24	1	PARAFFIN
6	43214	ISOBUTANE	58.12	11.20	8.03	1	PARAFFIN
7	43220	N-PENTANE	72.15	5.30	3.08	1	PARAFFIN
8	43231	N-HEXANE	86.17	8.80	4.25	1	PARAFFIN
9	43203	ETHYLENE	28.05	2.00	2.96	2	OLEFIN
10	43205	PROPYLENE	42.08	3.90	3.87	2	OLEFIN
11	43213	BUTENE	56.10	5.90	4.37	2	OLEFIN
12	43201	METHANE	16.04	15.70	40.76	6	METHANE
13	43202	ETHANE	30.07	4.60	6.37	7	NON-REACTIVE
14	45201	BENZENE	78.11	9.50	5.08	7	NON-REACTIVE
		TOTAL		100.00	99.99		
	8	COMPOUNDS OF CLASSIFICATION 1	66.56	58.40	36.58		
	3	COMPOUNDS OF CLASSIFICATION 2	43.84	11.80	11.20		
	0	COMPOUNDS OF CLASSIFICATION 3	.00	.00	.00		
	0	COMPOUNDS OF CLASSIFICATION 4	.00	.00	.00		
	0	COMPOUNDS OF CLASSIFICATION 5	.00	.00	.00		
	1	COMPOUNDS OF CLASSIFICATION 6	16.04	15.70	40.76		
	2	COMPOUNDS OF CLASSIFICATION 7	51.38	14.10	11.45		
	14	COMPOUND COMPOSITE	41.68	100.00	99.99		

NOTES: A. METHOD: CALCULATIONS FROM COMPOSITE SURVEY DATA GC-MS ANALYSIS OF LABORATORY TEST SAMPLES
B. REFERENCES: KVB TEST DATA (REF. 3)
C. APPLICABLE SCC CATEGORIES: 3-05-002-02

REFERENCES

1. "Compilation of Pollutant Emission Factors," Environmental Protection Agency, Research Triangle Park, NC, AP-42, August 1977.

2. Danielson, J. A. (ed.), "Air Pollution Engineering Manual," Environmental Protection Agency, Research Triangle Park, NC, AP-40, May 1973.

3. Taback, H. J., et al., "Control of Hydrocarbon Emissions from Stationary Sources in the California South Coast Air Basin," Vols. I and II, KVB, Inc., Tustin, CA, June 1978.

3-06 INDUSTRIAL PROCESS, PETROLEUM INDUSTRY

REFINERY OPERATIONS--FUGITIVE EMISSIONS

Introduction[1]

Although a modern refinery is a complex system of many processes, the entire operation can be divided into four major steps: separating, converting, treating, and blending. The crude oil is first separated into selected fractions (e.g., gasoline, kerosene, fuel, oil, etc.). Because the relative volumes of each fraction produced by merely separating the crude may not conform to the market demands for each fraction, some of the less valuable products, such as heavy naphtha, are converted to products with a greater sale value, such as gasoline. This conversion is accomplished by splitting (cracking), uniting (polymerization), or rearranging (reforming) the original molecules. The final step is the blending of the refined base stocks with each other and with various additives to meet final product specifications.

To accomplish this, thousands of valves, fittings, flanges and pumps help to contain and transfer petroleum fluid to the various process units within a refinery.

The potential sources of hydrocarbon fugitive emissions from oil refining operations are discussed in the following sections as listed below:

- Fluid Catalytic Cracker Unit (FCCU)
- Catalytic Reformer
- Process Drains
- Cooling Towers
- Pipeline Valves/Flanges/Fittings
- Pressure Relief Valves
- Pump/Compressor Seals

3-06-002 FLUID CATALYTIC CRACKING UNITS (FCCU)--GENERAL

Process Description[1,2]

Catalytic cracking involves the decomposition of large molecules into smaller, lower-boiling molecules by the addition of heat and pressure with the proper catalyst. Some of these molecules may polymerize to form large molecules. Finely powdered catalyst is lifted into the reactor by the incoming heated oil charge which vaporizes upon contact with the hot catalyst. Spent catalyst settles out in the reactor, is drawn off at a controlled rate, purged with steam, and lifted by an air stream into the regenerator where the deposited coke is burned off under controlled combustion conditions.

Emissions[2,3]

The resulting exhaust gases from the combustion of the coke deposits on the catalyst and may contain catalyst dust, hydrocarbons, and other impurities originating in the charging stock, as well as the products of combustion.

Catalyst dust is generally the pollutant of major concern. Hydrocarbons, carbon monoxide, ammonia, and organic acids are effectively controlled by incineration in carbon monoxide (CO) waste-heat boilers (Ref. 2).

AP-42 lists an uncontrolled hydrocarbon emission factor (e.g. without CO waste-heat boilers) of 220 lb/10^3 bbl of fresh feed. Studies (Ref. 3) conducted on FCC units with CO waste-heat boilers reported average hydrocarbon emission rates of 1.6 lb/10^3 bbl of fresh feed. Profile 3-06-002 presents the VOC emissions measured downstream of a FCC unit CO waste-heat boiler (Ref. 3)

Controls

As previously mentioned, the CO waste-heat boiler offers a secondary control feature for the unburned hydrocarbons, carbon monoxide, ammonia and organic acids. Therefore additional controls for these pollutants are not necessary. Electrostatic precipitators, however, are usually installed to control particulate emissions to acceptable limits.

Profile Basis[3]

Data presented in Profile 3-06-002 are based on field tests conducted at a 50,000 bbl/day FCC unit employing a CO waste-heat boiler and electrostatic precipitator. Samples were collected in glass gas collection bottles followed by NIOSH type charcoal tubes. The sample point was located downstream of the CO boiler in the exhaust stack.

Data Qualification

Profile 3-06-002 may be used to characterize the VOC emissions from a typical FCC unit employing a CO waste-heat boiler and electrostatic precipitator. Emission rates could vary, depending on the degree of catalyst coking and concentration of hydrocarbons entering the CO boiler.

DECEMBER 14, 1978 TABLE 3-06-002 INDUSTRIAL PROCESS, PETROLEUM INDUSTRY, REFINERY
FLUID CATALYTIC CRACKER, CO BOILER
DATA CONFIDENCE LEVEL: III

CONTROL DEVICE: NONE
PROCESS MODIFICATION: NONE
KVB PROFILE KEY 0029

LINE NO.	SAROAD CODE	CHEMICAL NAME	MOLECULAR WEIGHT	PERCENT WEIGHT	PERCENT VOLUME	CHEMICAL CLASSIFICATION
1	43105	ISOMERS OF HEXANE	86.17	13.00	3.69	1 PARAFFIN
2	43502	FORMALDEHYDE	30.03	51.00	41.49	4 CARBONYL
3	43201	METHANE	16.04	36.00	54.83	6 METHANE
		TOTAL		100.00	100.01	
	1	COMPOUNDS OF CLASSIFICATION 1	86.17	13.00	3.69	
	0	COMPOUNDS OF CLASSIFICATION 2	.00	.00	.00	
	0	COMPOUNDS OF CLASSIFICATION 3	.00	.00	.00	
	1	COMPOUNDS OF CLASSIFICATION 4	30.03	51.00	41.49	
	0	COMPOUNDS OF CLASSIFICATION 5	.00	.00	.00	
	1	COMPOUNDS OF CLASSIFICATION 6	16.04	36.00	54.83	
	0	COMPOUNDS OF CLASSIFICATION 7	.00	.00	.00	
	3	COMPOUND COMPOSITE	24.43	100.00	100.01	

NOTES: A. METHOD: CALCULATIONS FROM COMPOSITE SURVEY DATA GC-MS ANALYSIS OF SAMPLING TRAIN CATCH TAKEN WITH STACK EXTENSION
B. REFERENCES: KVB TEST DATA (REF. 3)
C. APPLICABLE SCC CATEGORIES: 3-06-002-01

REFERENCES

1. "Compilation of Pollutant Emission Factors," Environmental Protection Agency, Research Triangle Park, NC, AP-42, August 1977.

2. Danielson, J. A. (ed.), "Air Pollution Engineering Manual," Environmental Protection Agency, Research Triangle Park, NC, AP-40, May 1973.

3. Taback, H. J., et al., "Control of Hydrocarbon Emissions from Stationary Sources in the California South Coast Air Basin," Vols. I and II, KVB, Inc., Tustin, CA, June 1978.

3-06-005 PROCESS DRAINS

Process Description[1,3]

In refinery operations, condensate water and flushing water must be drained from the process equipment. These process drains also remove process liquid, leakage or spills and water used to cool pump glands.

Each major unit in a refinery is usually drained by a network of small lines which are generally trapped at their inlets and flow into junction or collection boxes, some of which are opened to the atmosphere.

The liquid waste then generally proceeds from the collection boxes into a network of large trunk lines. These connect with interceptor lines which carry the process water to API separators and water treatment plants.

Emissions[1]

Common sources of liquid hydrocarbons entering a drainage system are: process liquid sampling, turnarounds, blind changing, process equipment leaks, and spills. As the hydrocarbon-water mixture flows through the drainage system, VOC's are evaporated from the surface and may escape to the atmosphere through vents (Ref. 1).

Hydrocarbon emission rates as found in AP-42 are: uncontrolled (210 $lb/10^3$ bbl waste); vapor recovery or separator control (8 $lb/10^3$ bbl waste).

Estimated volatile organic specie emissions data are presented in Profile 3-06-005.

Controls[1]

Modern refining designs provide waste-water-effluent systems with running-liquid-sealed traps and liquid-sealed and covered junction boxes. These seals keep the amount of liquid hydrocarbons exposed to the air at a minimum and thereby reduce hydrocarbon losses.

Another form of control is to connect vapor recovery equipment to the drainage system.

Profile Basis[2]

Profile 3-06-005 is a composite of five separate refinery API separators and process drain hydrocarbon emissions tests. Controls other than inlet liquid traps were not used. This was decided to best estimate the volatile organic specie emissions from a typical refinery drainage system.

Samples were collected by means of gas collecting bottles and NIOSH type charcoal tubes. Process flow rates were estimated using engineering judgment.

Data Qualification

Profile 3-06-005 may be used to characterize the organic specie emissions from a typical refinery drainage system.

DECEMBER 14, 1978 TABLE 3-06-005 INDUSRIAL PROCESS, PETROLEUM INDUSTRY, REFINERY, FUGITIVE EMISSIONS, DRAINAGE/SEPARATION PITS, COVERED, CRUDE OIL AND GAS DATA CONFIDENCE LEVEL: III

CONTROL DEVICE: NONE
PROCESS MODIFICATION: NONE
KVB PROFILE KEY 0031

LINE NO.	SAROAD CODE	CHEMICAL NAME	MOLECULAR WEIGHT	PERCENT WEIGHT	PERCENT VOLUME	CHEMICAL CLASSIFICATION	
1	43105	ISOMERS OF HEXANE	86.17	12.20	9.28	1	PARAFFIN
2	43115	C-7 CYCLOPARAFFINS	98.19	16.90	11.24	1	PARAFFIN
3	43116	C-8 CYCLOPARAFFINS	112.23	5.20	3.01	1	PARAFFIN
4	43122	ISOMERS OF PENTANE	72.15	10.10	9.15	1	PARAFFIN
5	43204	PROPANE	44.09	5.90	8.76	1	PARAFFIN
6	43212	N-BUTANE	58.12	14.30	16.08	1	PARAFFIN
7	43214	ISOBUTANE	58.12	4.50	5.03	1	PARAFFIN
8	43220	N-PENTANE	72.15	12.00	10.85	1	PARAFFIN
9	43231	N-HEXANE	86.17	11.90	9.02	1	PARAFFIN
10	43201	METHANE	16.04	2.90	11.83	6	METHANE
11	43202	ETHANE	30.07	1.70	3.73	7	NON-REACTIVE
12	45201	BENZENE	78.11	2.40	2.03	7	NON-REACTIVE
		TOTAL		100.00	100.01		
	9	COMPOUNDS OF CLASSIFICATION 1	73.70	93.00	82.42		
	0	COMPOUNDS OF CLASSIFICATION 2	.00	.00	.00		
	0	COMPOUNDS OF CLASSIFICATION 3	.00	00	.00		
	0	COMPOUNDS OF CLASSIFICATION 4	.00	.00	.00		
	0	COMPOUNDS OF CLASSIFICATION 5	.00	.00	00		
	1	COMPOUNDS OF CLASSIFICATION 6	16.04	2.90	11.83		
	2	COMPOUNDS OF CLASSIFICATION 7	47.00	4.10	5.76		
	12	COMPOUND COMPOSITE	65.34	100.00	100.01		

NOTES: A. METHOD: CALCULATIONS FROM COMPOSITE SURVEY DATA GC-MS ANALYSIS OF SAMPLING TRAIN CATCH
B. REFERENCES: KVB TEST DATA (REF. 2)
C. APPLICABLE SCC CATEGORIES: 3-06-005-01

REFERENCES

1. Danielson, J. A. (ed.), "Air Pollution Engineering Manual," Environmental Protection Agency, Research Triangle Park, NC, AP-40, May 1973.

2. Taback, H. J., et al., "Control of Hydrocarbon Emissions from Stationary Sources in the California South Coast Air Basin," Vols. I and II, KVB, Inc., Tustin, CA, June 1978.

3. "Joint District, Federal and State Project for the Evaluation of Refinery Emissions," Report No. 8, June 1958, Los Angeles APCD.

3-06-007 COOLING TOWERS

Process Description[2]

Refineries use large amounts of water in the cooling of certain operations (heat exchangers) and process equipment. The large amounts of water used for cooling are conserved by recooling the water in wooden towers. Cooling is accomplished by evaporating part of this water.

Emissions

Hydrocarbons that might be entrained or dissolved in the water as a result of leaking heat exchange equipment or other process equipment where process cooling water has come into contact with a hydrocarbon stream are readily discharged to the atmosphere in the cooling tower. Improperly designed and/or maintained heat exchange equipment account for the majority of process leaks entering the water being recirculated through the tower. AP-42 (Ref. 1) reports an emission factor of 6.0 lb of HC/10^6 gallons of cooling water for cooling towers.

Profile 3-06-007 presents the estimated volatile organic species being emitted from a typical refinery cooling tower (Ref. 3).

Controls[2]

Control generally takes the form of not allowing (if possible without shutting a leaky unit down) process water that has come into contact with a hydrocarbon stream or has otherwise been contaminated with odorous material from entering the cooling tower water supply. This can be accomplished through the proper design and maintenance of heat exchange equipment which would then minimize the majority of process fluid losses.

Another form of control has been made possible with advancements in fan cooling of finned equipment, which in some instances has replaced the need for conventional cooling towers.

Profile Basis[3]

Profile 3-06-007 represents test data obtained on a large forced air refinery cooling tower serving an FCC unit, the gas plant for that FCC unit and a reformer unit. The water circulation rate was reported as 42,500 gal/min.

Water samples were taken at the inlet and outlet of the tower and analyzed (xylene extraction and GC analysis) for organic content. The organic content was identified as 100% isopentane.

Data Qualification

Profile 3-06-007 may be used to characterize the volatile organic emissions (as isomers of pentane) from a typical refinery cooling tower serving the above mentioned equipment.

DECEMBER 14, 1978 TABLE 3-06-007

INDUSTRIAL PROCESS, PETROLEUM INDUSTRY, REFINERY
COOLING TOWERS, FUGITIVE EMISSIONS
DATA CONFIDENCE LEVEL: III

CONTROL DEVICE: NONE
PROCESS MODIFICATION: NONE
KVB PROFILE KEY 0035

LINE NO.	SARGAD CODE	CHEMICAL NAME	MOLECULAR WEIGHT	PERCENT WEIGHT	PERCENT VOLUME	CHEMICAL CLASSIFICATION
1	43122	ISOMERS OF PENTANE	72.15	100.00	100.00	1 PARAFFIN
		TOTAL		100.00	100.00	
	1	COMPOUNDS OF CLASSIFICATION 1	72.15	100.00	100.00	
	0	COMPOUNDS OF CLASSIFICATION 2	.00	.00	.00	
	0	COMPOUNDS OF CLASSIFICATION 3	.00	.00	.00	
	0	COMPOUNDS OF CLASSIFICATION 4	.00	.00	.00	
	0	COMPOUNDS OF CLASSIFICATION 5	.00	.00	.00	
	0	COMPOUNDS OF CLASSIFICATION 6	.00	.00	.00	
	0	COMPOUNDS OF CLASSIFICATION 7	.00	.00	.00	
	1	COMPOUND COMPOSITE	72.15	100.00	100.00	

NOTES: A. METHOD: CALCULATIONS FROM COMPOSITE SURVEY DATA GC-MS ANALYSIS OF GRAB SAMPLE TAKEN FROM TOWER EXTERIOR
B. REFERENCES: KVB TEST DATA (REF. 3)
C. APPLICABLE SCC CATEGORIES: 3-06-007-01

REFERENCES

1. "Compilation of Pollutant Emission Factors," Environmental Protection Agency, Research Triangle Park, NC, AP-42, August 1977.

2. Danielson, J. A. (ed.), "Air Pollution Engineering Manual," Environmental Protection Agency, Research Triangle Park, NC, AP-40, May 1973.

3. Taback, H. J., et al., "Control of Hydrocarbon Emissions from Stationary Sources in the California South Coast Air Basin," Vols. I and II, KVB, Inc., Tustin, CA, June 1978.

3-06-008A MISCELLANEOUS PIPELINE/VALVES--FLANGES
--FITTINGS
--RELIEF VALVES

Process Descriptions

Pipeline valves, flanges, fittings and relief valves are a necessary part of any pressurized liquid handling system and their functions are self-explanatory.

Emissions[3]

Liquid and vapor leaks can develop at valve stems, flanges, and fittings as a result of heat, pressure, friction, corrosion, and vibration.

Liquid and vapor leaks can develop at pressure relief valves as a result of corrosion and failure of relief valves to reseat properly after blowoff. The inaccessible nature of most pressure relief valves accounts for poor maintenance which could allow substantial leakage before repair.

Emission rates and their associated hydrocarbon composition are a function of leak size for rates, and process material for speciation.

A recent study (Ref. 3) conducted on refinery emissions reported the following emission rates:

Device Type	Product	Emission Factor (lb/day·device)
Valves & Fittings		
Valves	Gas	0.4
Metal connections	Gas	0.003
Valves	Liquid	0.02
Metal connections	Liquid	0.003

Composite Emission Factor for
Valves - gas/liquid 0.15 lb/day·valve *

*Previous inventories (Ref. 4,5) have reported that the ratio of valves in liquid service to those in gas service in refinery operations was approximately 3 to 1. Applying this ratio to the emission factor for valves listed in the above table resulted in a composite emission factor of 0.15 lb/day valve which agrees with AP-42's 0.15 lb/day valve emission factor (Ref. 1).

Pressure relief valves have an emission factor of 11 lb/day·valve as reported in AP-42 (Ref. 1).

Details on pipeline and valve emissions are extensive and beyond the scope of this report, and the reader is advised to consult Reference 3 for further details.

The volatile organic species being emitted per device type is a function of the contained process fluid. Profile 3-06-008A through N characterize these emissions for various process fluids. Profile 3-06-008N applies to pressure relief valves for liquified petroleum gas service.

Controls[3]

Control generally takes the form of:

- proper valve or fitting selection,
- improved maintenance - scheduled leak checking, tightening, greasing or replacement when possible, and
- improved materials - e.g., valve packing, glands, etc.

Profile Basis[3]

Over 18,000 valves and miscellaneous fittings were checked for leaks. Leaks were checked for through KVB's spray and sniff (soap sprayer and TLV Explosion meter) method which is explained in Reference 3. The organic composition of a selected group of leaking valves and flanges was determined through the use of grab samples or gas collecting bottles plus NIOSH type charcoal tubes. Profiles 3-06-008A through N are the direct result of this effort.

Data Qualification

The above mentioned hydrocarbon emission factors and profiles may be used to characterize the volatile organic emissions from a refinery. Each profile identifies the process fluid associated with the leaking valves, flanges or fittings.

DECEMBER 14, 1978 TABLE 3-06-008A INDUSTRIAL PROCESS, PETROLEUM INDUSTRY, REFINERY MISCELLANOUS
PIPE/VALVE FLANGES, COMPOSITE
DATA CONFIDENCE LEVEL: III

CONTROL DEVICE: NONE
PROCESS MODIFICATION: NONE
KVB PROFILE KEY 0316

LINE NO.	SAROAD CODE	CHEMICAL NAME	MOLECULAR WEIGHT	PERCENT WEIGHT	PERCENT VOLUME	CHEMICAL CLASSIFICATION	
1	43105	ISOMERS OF HEXANE	86.17	1.60	.63	1	PARAFFIN
2	43106	ISOMERS OF HEPTANE	100.20	.80	.26	1	PARAFFIN
3	43107	ISOMERS OF OCTANE	114.23	.40	.13	1	PARAFFIN
4	43108	ISOMERS OF NONANE	128.25	.50	.13	1	PARAFFIN
5	43109	ISOMERS OF DECANE	142.28	.30	.07	1	PARAFFIN
6	43115	C-7 CYCLOPARAFFINS	98.19	.20	.07	1	PARAFFIN
7	43117	C-9 CYCLOPARAFFINS	126.26	.10	.03	1	PARAFFIN
8	43122	ISOMERS OF PENTANE	72.15	7.80	3.57	1	PARAFFIN
9	43204	PROPANE	44.09	11.50	8.63	1	PARAFFIN
10	43212	N-BUTANE	58.12	18.30	10.41	1	PARAFFIN
11	43214	ISOBUTANE	58.12	7.40	4.20	1	PARAFFIN
12	43220	N-PENTANE	72.15	7.70	3.54	1	PARAFFIN
13	43231	N-HEXANE	86.17	3.40	1.32	1	PARAFFIN
14	43232	N-HEPTANE	100.20	1.40	.46	1	PARAFFIN
15	43233	N-OCTANE	114.23	1.80	.53	1	PARAFFIN
16	43235	N-NONANE	128.25	.60	.17	1	PARAFFIN
17	43238	N-DECANE	142.28	.80	.20	1	PARAFFIN
18	43248	CYCLOHEXANE	84.16	.10	03	1	PARAFFIN
19	43205	PROPYLENE	42.08	.10	.07	2	OLEFIN
20	45102	ISOMERS OF XYLENE	106.16	.20	.07	3	AROMATIC
21	45202	TOLUENE	92.13	.50	.17	3	AROMATIC
22	43201	METHANE	16.04	28.60	58.92	6	METHANE
23	43202	ETHANE	30.07	5.80	6.38	7	NON-REACTIVE
24	45201	BENZENE	78.11	10	.03	7	NON-REACTIVE
		TOTAL		100.00	100.02		
	18	COMPOUNDS OF CLASSIFICATION 1	62.49	64.70	34.38		
	1	COMPOUNDS OF CLASSIFICATION 2	42.08	.10	.07		
	2	COMPOUNDS OF CLASSIFICATION 3	96.22	.70	.24		
	0	COMPOUNDS OF CLASSIFICATION 4	.00	.00	.00		
	0	COMPOUNDS OF CLASSIFICATION 5	.00	00	.00		
	1	COMPOUNDS OF CLASSIFICATION 6	16.04	28.60	58.92		
	2	COMPOUNDS OF CLASSIFICATION 7	30.29	5.90	6.41		
	24	COMPOUND COMPOSITE	33.13	100.00	100.02		

NOTES: A. METHOD: CALCULATIONS FROM COMPOSITE SURVEY DATA ENGINEERING EVALUATION OF KVB TEST DATA
B. REFERENCES: KVB TEST DATA (REF 3)
C. APPLICABLE SCC CATEGORIES: 3-06-008-01

DECEMBER 14, 1978 TABLE 3-06-008B INDUSTRIAL PROCESS, PETROLEUM INDUSTRY, REFINERY MISCELLANEOUS
PIPE/VALVE FLANGES, GASOLINE
DATA CONFIDENCE LEVEL: III

CONTROL DEVICE: NONE
PROCESS MODIFICATION: NONE
KVB PROFILE KEY 0317

LINE NO.	SAROAD CODE	CHEMICAL NAME	MOLECULAR WEIGHT	PERCENT WEIGHT	PERCENT VOLUME	CHEMICAL CLASSIFICATION	
1	43105	ISOMERS OF HEXANE	86.17	1.10	1.42	1	PARAFFIN
2	43106	ISOMERS OF HEPTANE	100.20	3.40	3.72	1	PARAFFIN
3	43107	ISOMERS OF OCTANE	114.23	4.70	4.49	1	PARAFFIN
4	43108	ISOMERS OF NONANE	128.25	8.50	7.23	1	PARAFFIN
5	43109	ISOMERS OF DECANE	142.28	2.60	1.97	1	PARAFFIN
6	43115	C-7 CYCLOPARAFFINS	98.19	1.00	1.10	1	PARAFFIN
7	43116	C-8 CYCLOPARAFFINS	112.23	.20	.22	1	PARAFFIN
8	43117	C-9 CYCLOPARAFFINS	126.26	2.60	2.30	1	PARAFFIN
9	43204	PROPANE	44.09	.20	.55	1	PARAFFIN
10	43212	N-BUTANE	58.12	.70	1.31	1	PARAFFIN
11	43214	ISOBUTANE	58.12	.10	.22	1	PARAFFIN
12	43220	N-PENTANE	72.15	1.30	1.97	1	PARAFFIN
13	43231	N-HEXANE	86.17	3.20	4.05	1	PARAFFIN
14	43232	N-HEPTANE	100.20	1.40	1.53	1	PARAFFIN
15	43233	N-OCTANE	114.23	58.10	55.75	1	PARAFFIN
16	43235	N-NONANE	128.25	2.80	2.41	1	PARAFFIN
17	43248	CYCLOHEXANE	84.16	.90	1.20	1	PARAFFIN
18	45102	ISOMERS OF XYLENE	106.16	2.60	2.74	3	AROMATIC
19	45202	TOLUENE	92.13	3.20	3.83	3	AROMATIC
20	45201	BENZENE	78.11	1.40	1.97	7	NON-REACTIVE
		TOTAL		100.00	99.98		
	17	COMPOUNDS OF CLASSIFICATION 1	111.27	92.80	91.44		
	0	COMPOUNDS OF CLASSIFICATION 2	.00	.00	.00		
	2	COMPOUNDS OF CLASSIFICATION 3	97.98	5.80	6.57		
	0	COMPOUNDS OF CLASSIFICATION 4	.00	.00	.00		
	0	COMPOUNDS OF CLASSIFICATION 5	.00	.00	.00		
	0	COMPOUNDS OF CLASSIFICATION 6	.00	.00	.00		
	1	COMPOUNDS OF CLASSIFICATION 7	78.11	1.40	1.97		
	20	COMPOUND COMPOSITE	109.74	100.00	99.98		

NOTES: A. METHOD: CALCULATIONS FROM COMPOSITE SURVEY DATA ENGINEERING EVALUATION OF KVB TEST DATA
B. REFERENCES: KVB TEST DATA (REF. 3)
C. APPLICABLE SCC CATEGORIES: 3-06-008-01

DECEMBER 14, 1978 TABLE 3-06-008C INDUSTRIAL PROCESS, PETROLEUM INDUSTRY, REFINERY MISCELLANEOUS
PIPE/VALVE FLANGES, CRACKED GASOLINE
DATA CONFIDENCE LEVEL: III

CONTROL DEVICE: NONE
PROCESS MODIFICATION: NONE
KVB PROFILE KEY 0319

LINE NO.	SAROAD CODE	CHEMICAL NAME	MOLECULAR WEIGHT	PERCENT WEIGHT	PERCENT VOLUME	CHEMICAL CLASSIFICATION	
1	43105	ISOMERS OF HEXANE	86.17	12.80	12.21	1	PARAFFIN
2	43107	ISOMERS OF OCTANE	114.23	4.10	2.95	1	PARAFFIN
3	43108	ISOMERS OF NONANE	128.25	.20	.16	1	PARAFFIN
4	43115	C-7 CYCLOPARAFFINS	98.19	3.90	3.28	1	PARAFFIN
5	43117	C-9 CYCLOPARAFFINS	126.26	.30	.16	1	PARAFFIN
6	43122	ISOMERS OF PENTANE	72.15	21.40	24.34	1	PARAFFIN
7	43212	N-BUTANE	58.12	1.10	1.56	1	PARAFFIN
8	43220	N-PENTANE	72.15	19.70	22.38	1	PARAFFIN
9	43231	N-HEXANE	86.17	15.40	14.67	1	PARAFFIN
10	43232	N-HEPTANE	100.20	14.90	12.21	1	PARAFFIN
11	43213	BUTENE	56.10	1.10	1.64	2	OLEFIN
12	45102	ISOMERS OF XYLENE	106.16	1.60	1.23	3	AROMATIC
13	45202	TOLUENE	92.13	3.00	2.70	3	AROMATIC
14	45201	BENZENE	78.11	.50	.49	7	NON-REACTIVE
		TOTAL		100.00	99.98		
	10	COMPOUNDS OF CLASSIFICATION 1	82.00	93.80	93.92		
	1	COMPOUNDS OF CLASSIFICATION 2	56.10	1.10	1.64		
	2	COMPOUNDS OF CLASSIFICATION 3	96.52	4.60	3.93		
	0	COMPOUNDS OF CLASSIFICATION 4	.00	.00	.00		
	0	COMPOUNDS OF CLASSIFICATION 5	.00	.00	.00		
	0	COMPOUNDS OF CLASSIFICATION 6	.00	.00	.00		
	1	COMPOUNDS OF CLASSIFICATION 7	78.11	.50	.49		
	14	COMPOUND COMPOSITE	82.12	100.00	99.98		

NOTES: A. METHOD: CALCULATIONS FROM COMPOSITE SURVEY DATA ENGINEERING EVALUATION OF KVB TEST DATA
B. REFERENCES: KVB TEST DATA (REF. 3)
C. APPLICABLE SCC CATEGORIES: 3-06-008-01

DECEMBER 14, 1978 TABLE 3-06-008D INDUSTRIAL PROCESS, PETROLEUM INDUSTRY, REFINERY MISCELLANOUS
PIPE/VALVE FLANGES, GAS-OIL STOCK
DATA CONFIDENCE LEVEL: III

CONTROL DEVICE: NONE
PROCESS MODIFICATION: NONE
KVB PROFILE KEY 0322

LINE NO.	SAROAD CODE	CHEMICAL NAME	MOLECULAR WEIGHT	PERCENT WEIGHT	PERCENT VOLUME	CHEMICAL CLASSIFICATION	
1	43105	ISOMERS OF HEXANE	86.17	6.00	4.00	1	PARAFFIN
2	43106	ISOMERS OF HEPTANE	100.20	16.00	9.15	1	PARAFFIN
3	43122	ISOMERS OF PENTANE	72.15	3.80	3.03	1	PARAFFIN
4	43204	PROPANE	44.09	3.30	4.29	1	PARAFFIN
5	43212	N-BUTANE	58.12	6.50	6.40	1	PARAFFIN
6	43220	N-PENTANE	72.15	7.40	5.89	1	PARAFFIN
7	43231	N-HEXANE	86.17	11.80	7.83	1	PARAFFIN
8	43232	N-HEPTANE	100.20	8.30	4.75	1	PARAFFIN
9	43233	N-OCTANE	114.23	7.90	3.95	1	PARAFFIN
10	43235	N-NONANE	128.25	4.40	1.94	1	PARAFFIN
11	43238	N-DECANE	142.28	3.50	1.43	1	PARAFFIN
12	45202	TOLUENE	92.13	7.30	4.52	3	AROMATIC
13	43201	METHANE	16.04	10.00	35.62	6	METHANE
14	43202	ETHANE	30.07	3.80	7.20	7	NON-REACTIVE
		TOTAL		100.00	100.00		
	11	COMPOUNDS OF CLASSIFICATION 1	85.84	78.90	52.66		
	0	COMPOUNDS OF CLASSIFICATION 2	.00	.00	.00		
	1	COMPOUNDS OF CLASSIFICATION 3	92.13	7.30	4.52		
	0	COMPOUNDS OF CLASSIFICATION 4	.00	.00	.00		
	0	COMPOUNDS OF CLASSIFICATION 5	.00	.00	.00		
	1	COMPOUNDS OF CLASSIFICATION 6	16.04	10.00	35.62		
	1	COMPOUNDS OF CLASSIFICATION 7	30.07	3.80	7.20		
	14	COMPOUND COMPOSITE	57.25	100.00	100.00		

NOTES: A. METHOD: CALCULATIONS FROM COMPOSITE SURVEY DATA ENGINEERING EVALUATION OF KVB TEST DATA
B. REFERENCES: KVB TEST DATA (REF. 3)
C. APPLICABLE SCC CATEGORIES: 3-06-008-01

DECEMBER 14, 1978 TABLE 3-06-008E INDUSTRIAL PROCESS, PETROLEUM INDUSTRY, REFINERY MICELLANEOUS
PIPE/VALVE FLANGES, REFORMATE STOCK
DATA CONFIDENCE LEVEL: III

CONTROL DEVICE: NONE
PROCESS MODIFICATION: NONE
KVB PROFILE KEY 0309

LINE NO.	SAROAD CODE	CHEMICAL NAME	MOLECULAR WEIGHT	PERCENT WEIGHT	PERCENT VOLUME	CHEMICAL CLASSIFICATION	
1	43204	PROPANE	44.09	13.90	21.33	1	PARAFFIN
2	43212	N-BUTANE	58.12	24.70	28.77	1	PARAFFIN
3	43220	N-PENTANE	72.15	21.50	20.18	1	PARAFFIN
4	43231	N-HEXANE	86.17	19.30	15.17	1	PARAFFIN
5	43232	N-HEPTANE	100.20	10.00	6.77	1	PARAFFIN
6	43233	N-OCTANE	114.23	9.70	5.75	1	PARAFFIN
7	43202	ETHANE	30.07	.90	2.03	7	NON-REACTIVE
		TOTAL		100.00	100.00		
	6	COMPOUNDS OF CLASSIFICATION 1	68.50	99.10	97.97		
	0	COMPOUNDS OF CLASSIFICATION 2	.00	.00	.00		
	0	COMPOUNDS OF CLASSIFICATION 3	.00	.00	.00		
	0	COMPOUNDS OF CLASSIFICATION 4	.00	.00	.00		
	0	COMPOUNDS OF CLASSIFICATION 5	.00	.00	.00		
	0	COMPOUNDS OF CLASSIFICATION 6	.00	.00	.00		
	1	COMPOUNDS OF CLASSIFICATION 7	30.07	.90	2.03		
	7	COMPOUND COMPOSITE	67.72	100.00	100.00		

NOTES: A. METHOD: CALCULATIONS FROM COMPOSITE SURVEY DATA ENGINEERING EVALUATION OF KVB TEST DATA
B. REFERENCES: KVB TEST DATA (REF. 3)
C. APPLICABLE SCC CATEGORIES: 3-06-008-01

DECEMBER 14, 1978 TABLE 3-06-008F INDUSTRIAL PROCESS, PETROLEUM INDUSTRY, REFINERY MISCELLANEOUS
PIPE/VALVE FLANGES, DISTILLATE
DATA CONFIDENCE LEVEL: III

CONTROL DEVICE: NONE
PROCESS MODIFICATION: NONE
KVB PROFILE KEY 0318

LINE NO.	SAROAD CODE	CHEMICAL NAME	MOLECULAR WEIGHT	PERCENT WEIGHT	PERCENT VOLUME	CHEMICAL CLASSIFICATION	
1	43105	ISOMERS OF HEXANE	86.17	3.00	2.45	1	PARAFFIN
2	43106	ISOMERS OF HEPTANE	100.20	2.00	1.40	1	PARAFFIN
3	43107	ISOMERS OF OCTANE	114.23	3.00	1.82	1	PARAFFIN
4	43108	ISOMERS OF NONANE	128.25	50	28	1	PARAFFIN
5	43122	ISOMERS OF PENTANE	72.15	5.00	4.83	1	PARAFFIN
6	43204	PROPANE	44.09	5.30	8.40	1	PARAFFIN
7	43212	N-BUTANE	58.12	12.70	15.34	1	PARAFFIN
8	43214	ISOBUTANE	58.12	2.50	3.01	1	PARAFFIN
9	43220	N-PENTANE	72.15	11.00	10.71	1	PARAFFIN
10	43231	N-HEXANE	86.17	9.00	7.28	1	PARAFFIN
11	43232	N-HEPTANE	100.20	8.60	6.02	1	PARAFFIN
12	43233	N-OCTANE	114.23	9.90	6.09	1	PARAFFIN
13	43235	N-NONANE	128.25	6.50	3.57	1	PARAFFIN
14	43238	N-DECANE	142.28	14.80	7.28	1	PARAFFIN
15	43248	CYCLOHEXANE	84.16	1.00	.84	1	PARAFFIN
16	43201	METHANE	16.04	4.20	18.35	6	METHANE
17	43202	ETHANE	30.07	1.00	2.31	7	NON-REACTIVE
		TOTAL		100.00	99.98		
	15	COMPOUNDS OF CLASSIFICATION 1	83.76	94.80	79.32		
	0	COMPOUNDS OF CLASSIFICATION 2	.00	00	.00		
	0	COMPOUNDS OF CLASSIFICATION 3	00	00	.00		
	0	COMPOUNDS OF CLASSIFICATION 4	.00	00	.00		
	0	COMPOUNDS OF CLASSIFICATION 5	.00	.00	.00		
	1	COMPOUNDS OF CLASSIFICATION 6	16.04	4.20	18.35		
	1	COMPOUNDS OF CLASSIFICATION 7	30.07	1.00	2.31		
	17	COMPOUND COMPOSITE	70.09	100.00	99.98		

NOTES: A. METHOD: CALCULATIONS FROM COMPOSITE SURVEY DATA ENGINEERING EVALUATION OF KVB TEST DATA
B. REFERENCES: KVB TEST DATA (REF. 3)
C. APPLICABLE SCC CATEGORIES: 3-06-008-01

PIPE/VALVE FLANGES, NAPHTHA
DATA CONFIDENCE LEVEL: III

CONTROL DEVICE: NONE
PROCESS MODIFICATION: NONE
KVB PROFILE KEY 0320

LINE NO.	SAROAD CODE	CHEMICAL NAME	MOLECULAR WEIGHT	PERCENT WEIGHT	PERCENT VOLUME	CHEMICAL CLASSIFICATION	
1	43105	ISOMERS OF HEXANE	86.17	6.60	8.43	1	PARAFFIN
2	43107	ISOMERS OF OCTANE	114.23	5.60	5.37	1	PARAFFIN
3	43108	ISOMERS OF NONANE	128.25	20.60	17.63	1	PARAFFIN
4	43109	ISOMERS OF DECANE	142.28	16.60	12.81	1	PARAFFIN
5	43115	C-7 CYCLOPARAFFINS	98.19	2.40	2.63	1	PARAFFIN
6	43116	C-8 CYCLOPARAFFINS	112.23	.60	.55	1	PARAFFIN
7	43117	C-9 CYCLOPARAFFINS	126.26	4.80	4.16	1	PARAFFIN
8	43122	ISOMERS OF PENTANE	72.15	40	.66	1	PARAFFIN
9	43204	PROPANE	44.09	.60	1.53	1	PARAFFIN
10	43212	N-BUTANE	58.12	.60	1.10	1	PARAFFIN
11	43220	N-PENTANE	72.15	1.30	1.97	1	PARAFFIN
12	43231	N-HEXANE	86.17	6.20	7.89	1	PARAFFIN
13	43232	N-HEPTANE	100.20	1.80	1.97	1	PARAFFIN
14	43233	N-OCTANE	114.23	6.40	6.13	1	PARAFFIN
15	43235	N-NONANE	128.25	8.30	7.12	1	PARAFFIN
16	43248	CYCLOHEXANE	84.16	1.50	1.97	1	PARAFFIN
17	45102	ISOMERS OF XYLENE	106.16	7.00	7.23	3	AROMATIC
18	45202	TOLUENE	92.13	6.20	7.34	3	AROMATIC
19	45201	BENZENE	78.11	2.50	3.50	7	NON-REACTIVE
		TOTAL		100.00	99.99		
	16	COMPOUNDS OF CLASSIFICATION 1	112.87	84.30	81.92		
	0	COMPOUNDS OF CLASSIFICATION 2	.00	.00	.00		
	2	COMPOUNDS OF CLASSIFICATION 3	99.09	13.20	14.57		
	0	COMPOUNDS OF CLASSIFICATION 4	.00	.00	.00		
	0	COMPOUNDS OF CLASSIFICATION 5	.00	00	00		
	0	COMPOUNDS OF CLASSIFICATION 6	.00	.00	.00		
	1	COMPOUNDS OF CLASSIFICATION 7	78.11	2.50	3.50		
	19	COMPOUND COMPOSITE	109.65	100.00	99.99		

NOTES: A. METHOD: CALCULATIONS FROM COMPOSITE SURVEY DATA ENGINEERING EVALUATION OF KVB TEST DATA
B. REFERENCES: KVB TEST DATA (REF. 3)
C. APPLICABLE SCC CATEGORIES: 3-06-008-01

CONTROL DEVICE: NONE
PROCESS MODIFICATION: NONE
KVB PROFILE KEY 0324

LINE NO.	SAROAD CODE	CHEMICAL NAME	MOLECULAR WEIGHT	PERCENT WEIGHT	PERCENT VOLUME	CHEMICAL CLASSIFICATION	
1	43105	ISOMERS OF HEXANE	86.17	1.30	.59	1	PARAFFIN
2	43106	ISOMERS OF HEPTANE	100.20	.20	.08	1	PARAFFIN
3	43122	ISOMERS OF PENTANE	72.15	10.70	5.83	1	PARAFFIN
4	43204	PROPANE	44.09	15.90	14.23	1	PARAFFIN
5	43212	N-BUTANE	58.12	26.80	18.17	1	PARAFFIN
6	43214	ISOBUTANE	58.12	11.30	7.65	1	PARAFFIN
7	43220	N-PENTANE	72.15	9.40	5.12	1	PARAFFIN
8	43231	N-HEXANE	86.17	2.80	1.30	1	PARAFFIN
9	43232	N-HEPTANE	100.20	.10	.04	1	PARAFFIN
10	43201	METHANE	16.04	16.40	40.28	6	METHANE
11	43202	ETHANE	30.07	5.10	6.70	7	NON-REACTIVE
		TOTAL		100.00	99.99		
	9	COMPOUNDS OF CLASSIFICATION 1	58.35	78.50	53.01		
	0	COMPOUNDS OF CLASSIFICATION 2	.00	.00	.00		
	0	COMPOUNDS OF CLASSIFICATION 3	.00	.00	.00		
	0	COMPOUNDS OF CLASSIFICATION 4	.00	.00	.00		
	0	COMPOUNDS OF CLASSIFICATION 5	.00	.00	.00		
	1	COMPOUNDS OF CLASSIFICATION 6	16.04	16.40	40.28		
	1	COMPOUNDS OF CLASSIFICATION 7	30.07	5.10	6.70		
	11	COMPOUND COMPOSITE	39.41	100.00	99.99		

NOTES: A. METHOD: CALCULATIONS FROM COMPOSITE SURVEY DATA ENGINEERING EVALUATION OF KVB TEST DATA
B. REFERENCES: KVB TEST DATA (REF. 3)
C. APPLICABLE SCC CATEGORIES: 3-06-008-01

DECEMBER 14, 1978 TABLE 3-06-008J INDUSTRIAL PROCESS, PETROLEUM INDUSTRY, REFINERY MISCELLANEOUS
PIPE/VALVE FLANGES, NATURAL GAS
DATA CONFIDENCE LEVEL: III

CONTROL DEVICE: NONE
PROCESS MODIFICATION: NONE
KVB PROFILE KEY 0323

LINE NO.	SAROAD CODE	CHEMICAL NAME	MOLECULAR WEIGHT	PERCENT WEIGHT	PERCENT VOLUME	CHEMICAL CLASSIFICATION	
1	43204	PROPANE	44.09	3.60	1.43	1	PARAFFIN
2	43212	N-BUTANE	58.12	.50	.16	1	PARAFFIN
3	43203	ETHYLENE	28.05	.40	24	2	OLEFIN
4	43201	METHANE	16.04	84.50	91.79	6	METHANE
5	43202	ETHANE	30.07	11.00	6.38	7	NON-REACTIVE
		TOTAL		100.00	100.00		
	2	COMPOUNDS OF CLASSIFICATION 1	45.50	4.10	1.59		
	1	COMPOUNDS OF CLASSIFICATION 2	28.05	.40	.24		
	0	COMPOUNDS OF CLASSIFICATION 3	.00	.00	.00		
	0	COMPOUNDS OF CLASSIFICATION 4	.00	00	.00		
	0	COMPOUNDS OF CLASSIFICATION 5	.00	.00	.00		
	1	COMPOUNDS OF CLASSIFICATION 6	16.04	84.50	91.79		
	1	COMPOUNDS OF CLASSIFICATION 7	30.07	11.00	6.38		
	5	COMPOUND COMPOSITE	17.43	100.00	100.00		

NOTES: A. METHOD: CALCULATIONS FROM COMPOSITE SURVEY DATA ENGINEERING EVALUATION OF KVB TEST DATA
B. REFERENCES: KVB TEST DATA (REF. 3)
C. APPLICABLE SCC CATEGORIES: 3-06-008-01

DECEMBER 14, 1978 TABLE 3-06-008K INDUSTRIAL PROCESS, PETROLEUM INDUSTRY, REFINERY MISCELLANEOUS
VALVES AND FLANGES, WET AND DRY NATURAL GAS
DATA CONFIDENCE LEVEL: III

CONTROL DEVICE: NONE
PROCESS MODIFICATION: NONE
KVB PROFILE KEY 0041

LINE NO.	SAROAD CODE	CHEMICAL NAME	MOLECULAR WEIGHT	PERCENT WEIGHT	PERCENT VOLUME	CHEMICAL CLASSIFICATION	
1	43122	ISOMERS OF PENTANE	72.15	1.10	.31	1	PARAFFIN
2	43204	PROPANE	44.09	11.10	5.19	1	PARAFFIN
3	43212	N-BUTANE	58.12	4.40	1.56	1	PARAFFIN
4	43214	ISOBUTANE	58.12	2.90	1.03	1	PARAFFIN
5	43220	N-PENTANE	72.15	.70	.21	1	PARAFFIN
6	43201	METHANE	16.04	62.00	79.53	6	METHANE
7	43202	ETHANE	30.07	17.80	12.18	7	NON-REACTIVE
		TOTAL		100.00	100.01		
	5	COMPOUNDS OF CLASSIFICATION 1	50.23	20.20	8.30		
	0	COMPOUNDS OF CLASSIFICATION 2	.00	.00	.00		
	0	COMPOUNDS OF CLASSIFICATION 3	.00	.00	.00		
	0	COMPOUNDS OF CLASSIFICATION 4	.00	.00	.00		
	0	COMPOUNDS OF CLASSIFICATION 5	.00	.00	.00		
	1	COMPOUNDS OF CLASSIFICATION 6	16.04	62.00	79.53		
	1	COMPOUNDS OF CLASSIFICATION 7	30.07	17.80	12.18		
	7	COMPOUND COMPOSITE	20.59	100.00	100.01		

NOTES: A. METHOD: CALCULATIONS FROM COMPOSITE SURVEY DATA GC-MS ANALYSIS OF GRAB SAMPLE ADJACENT TO LEAK AREA
B. REFERENCES: KVB TEST DATA (REF. 3)
C. APPLICABLE SCC CATEGORIES: 3-06-008-01

DECEMBER 14, 1978 TABLE 3-06-008L INDUSTRIAL PROCESS, PETROLEUM INDUSTRY, REFINERY MISCELLANEOUS VALVES AND FLANGES, GAS PLANT
DATA CONFIDENCE LEVEL: III

CONTROL DEVICE: NONE
PROCESS MODIFICATION: NONE
KVB PROFILE KEY 0036

LINE NO.	SAROAD CODE	CHEMICAL NAME	MOLECULAR WEIGHT	PERCENT WEIGHT	PERCENT VOLUME	CHEMICAL CLASSIFICATION	
1	43105	ISOMERS OF HEXANE	86.17	1.60	.63	1	PARAFFIN
2	43106	ISOMERS OF HEPTANE	100.20	.80	.26	1	PARAFFIN
3	43107	ISOMERS OF OCTANE	114.23	.40	.13	1	PARAFFIN
4	43109	ISOMERS OF DECANE	142.28	.30	.07	1	PARAFFIN
5	43115	C-7 CYCLOPARAFFINS	98.19	.20	.07	1	PARAFFIN
6	43117	C-9 CYCLOPARAFFINS	126.26	.10	.03	1	PARAFFIN
7	43122	ISOMERS OF PENTANE	72.15	7.80	3.57	1	PARAFFIN
8	43204	PROPANE	44.09	11.50	8.62	1	PARAFFIN
9	43212	N-BUTANE	58.12	18.30	10.40	1	PARAFFIN
10	43214	ISOBUTANE	58.12	7.40	4.19	1	PARAFFIN
11	43220	N-PENTANE	72.15	7.70	3.53	1	PARAFFIN
12	43231	N-HEXANE	86.17	3.40	1.32	1	PARAFFIN
13	43232	N-HEPTANE	100.20	1.40	.46	1	PARAFFIN
14	43233	N-OCTANE	114.23	1.80	.53	1	PARAFFIN
15	43235	N-NONANE	128.25	.60	.17	1	PARAFFIN
16	43238	N-DECANE	142.28	.80	.20	1	PARAFFIN
17	43242	CYCLOPENTANE	70.14	.50	.23	1	PARAFFIN
18	43248	CYCLOHEXANE	84.16	.10	.03	1	PARAFFIN
19	43205	PROPYLENE	42.08	.10	.07	2	OLEFIN
20	45102	ISOMERS OF XYLENE	106.16	.20	.07	3	AROMATIC
21	45202	TOLUENE	92.13	.50	.17	3	AROMATIC
22	43201	METHANE	16.04	28.60	58.86	6	METHANE
23	43202	ETHANE	30.07	5.80	6.37	7	NON-REACTIVE
24	45201	BENZENE	78.11	.10	.03	7	NON-REACTIVE
		TOTAL		100.00	100.01		
	18	COMPOUNDS OF CLASSIFICATION 1	62.29	64.70	34.44		
	1	COMPOUNDS OF CLASSIFICATION 2	42.08	.10	.07		
	2	COMPOUNDS OF CLASSIFICATION 3	96.22	.70	.24		
	0	COMPOUNDS OF CLASSIFICATION 4	.00	.00	.00		
	0	COMPOUNDS OF CLASSIFICATION 5	.00	.00	.00		
	1	COMPOUNDS OF CLASSIFICATION 6	16.04	28.60	58.86		
	2	COMPOUNDS OF CLASSIFICATION 7	30.30	5.90	6.40		
	24	COMPOUND COMPOSITE	33.09	100.00	100.01		

NOTES: A. METHOD: CALCULATIONS FROM COMPOSITE SURVEY DATA GC-MS ANALYSIS OF SAMPLING TRAIN CATCH
B. REFERENCES: KVB TEST DATA (REF 3)
C. APPLICABLE SCC CATEGORIES: 3-06-008-01

DECEMBER 14, 1978 TABLE 3-06-008M INDUSTRIAL PROCESS, PETROLEUM INDUSTRY, MISCELLANEOUS
WET GAS VALVE FROM TRAPS, WET NATURAL GAS, COMPOSITE
DATA CONFIDENCE LEVEL: III

CONTROL DEVICE: NONE
PROCESS MODIFICATION: NONE
KVB PROFILE KEY 0042

LINE NO.	SAROAD CODE	CHEMICAL NAME	MOLECULAR WEIGHT	PERCENT WEIGHT	PERCENT VOLUME	CHEMICAL CLASSIFICATION	
1	43122	ISOMERS OF PENTANE	72.15	1.20	.40	1	PARAFFIN
2	43204	PROPANE	44.09	18.60	9.92	1	PARAFFIN
3	43212	N-BUTANE	58.12	8.30	3.36	1	PARAFFIN
4	43214	ISOBUTANE	58.12	4.30	1.74	1	PARAFFIN
5	43220	N-PENTANE	72.15	.90	.31	1	PARAFFIN
6	43201	METHANE	16.04	47.00	68.88	6	METHANE
7	43202	ETHANE	30.07	19.70	15.40	7	NON-REACTIVE
		TOTAL		100.00	100.01		
		5 COMPOUNDS OF CLASSIFICATION 1	49.91	33.30	15.73		
		0 COMPOUNDS OF CLASSIFICATION 2	.00	.00	.00		
		0 COMPOUNDS OF CLASSIFICATION 3	.00	.00	.00		
		0 COMPOUNDS OF CLASSIFICATION 4	.00	.00	.00		
		0 COMPOUNDS OF CLASSIFICATION 5	.00	.00	.00		
		1 COMPOUNDS OF CLASSIFICATION 6	16.04	47.00	68.88		
		1 COMPOUNDS OF CLASSIFICATION 7	30.07	19.70	15.40		
		7 COMPOUND COMPOSITE	23.53	100.00	100.01		

NOTES: A. METHOD: CALCULATIONS FROM COMPOSITE SURVEY DATA GC-MS ANALYSIS OF GRAB SAMPLES
B. REFERENCES: KVB TEST DATA (REF. 3)
C. APPLICABLE SCC CATEGORIES: 3-06-008-01

DECEMBER 14, 1978 TABLE 3-06-008N INDUSTRIAL PROCESS, PETROLEUM INDUSTRY, MARKETING, FUGITIVE EMISSIONS, RELIEF VALVES, LIQUIFIED PETROLEUM GAS
DATA CONFIDENCE LEVEL: III

CONTROL DEVICE: NONE
PROCESS MODIFICATION: NONE
KVB PROFILE KEY 0047

LINE NO.	SAROAD CODE	CHEMICAL NAME	MOLECULAR WEIGHT	PERCENT WEIGHT	PERCENT VOLUME	CHEMICAL CLASSIFICATION	
1	43204	PROPANE	44.09	90.40	88.59	1	PARAFFIN
2	43214	ISOBUTANE	58.12	.40	.30	1	PARAFFIN
3	43205	PROPYLENE	42.08	5.10	5.23	2	OLEFIN
4	43202	ETHANE	30.07	4.10	5.88	7	NON-REACTIVE
		TOTAL		100.00	100.00		
	2	COMPOUNDS OF CLASSIFICATION 1	44.14	90.80	88.89		
	1	COMPOUNDS OF CLASSIFICATION 2	42.08	5.10	5.23		
	0	COMPOUNDS OF CLASSIFICATION 3	.00	.00	.00		
	0	COMPOUNDS OF CLASSIFICATION 4	.00	.00	.00		
	0	COMPOUNDS OF CLASSIFICATION 5	.00	.00	.00		
	0	COMPOUNDS OF CLASSIFICATION 6	.00	.00	.00		
	1	COMPOUNDS OF CLASSIFICATION 7	30.07	4.10	5.88		
	4	COMPOUND COMPOSITE	43.20	100.00	100.00		

NOTES: A. METHOD: CALCULATIONS FROM COMPOSITE SURVEY DATA ENGINEERING EVALUATION OF LITERATURE DATA
B. REFERENCES: T.W. SONNICHSEN, KVB ENGINEER
C. APPLICABLE SCC CATEGORIES: 3-06-008-02

REFERENCES

1. "Compilation of Pollutant Emission Factors," Environmental Protection Agency, Research Triangle Park, NC, AP-42, August 1977.

2. Danielson, J. A. (ed.), "Air Pollution Engineering Manual," Environmental Protection Agency, Research Triangle Park, NC AP-40, May 1973.

3. Taback, H. J., et al., "Control of Hydrocarbon Emissions from Stationary Sources in the California South Coast Air Basin," Vols. I and II, KVB, Inc., Tustin, CA, June 1978.

4. "Joint District, Federal and State Project for the Evaluation of Refinery Emissions," Report No. 8, June 1958, Los Angeles APCD.

5. "Joint District, Federal and State Project for the Evaluation of Refinery Emissions, Report No. 2, March 1957, Los Angeles APCD.

3-06-008B MISCELLANEOUS--PUMP SEALS --COMPRESSOR SEALS

Process Description

There are many different types of pumps and compressors used to transfer liquids and gases in a modern refinery, the scope of which is beyond this report. Respective equipment manufacturers should be consulted for information on specific types of equipment.

Emissions

During normal operation, the only source of emissions from centrifugal pumps and compressors is where the drive shaft passes through the impeller casing. On reciprocating units leakage is possible at the entrance of the connecting rod into the cylinder or fluid chamber. These losses may be vapor or liquid and generally occur when shafts become scarred or move eccentrically, or through failure of the packing or seal faces (Ref. 4).

The rate at which this destruction of seal efficiency progresses depends upon the abrasive and corrosive properties of the product handled and the type of maintenance practiced (Ref. 4).

The emission factors listed below are from a recent refinery hydrocarbon emission study (Ref. 3).

Device Type	Product	Emission Factor (lb/day·device)	Composite Emission Factor (lb/seal·day)
Pump Seals			
Mechanical	<26 RVP	0.3	1.5
Mechanical	>26 RVP	7.0	
Packed	<26 RVP	0.4	11.0
Packed	>26 RVP	40.0	
Pumps (Composite for all units)			3.0
Compressor (composite for all units)*			28.0 lb/unit·day)

RVP - Reid Vapor Pressure

*Based on a petroleum production gas plant compressor site.

The organic species estimated to be emanating from these leaks are presented in Profiles 3-06-008P through X for pumps and Profiles 3-06-008Y and Z for compressors.

Controls

Controls generally take the form of:

- proper choice of sealing mechanism
- selection of improved sealing materials
- proper maintenance, and
- venting of compressor glands to a vapor recovery system or flare

Profile Basis[3]

Profiles are based on data from tests performed on approximately 80 pumps and 10 compressors. Gas samples were taken on a select few based on leak rate and process fluid composition. Samples were taken by grab samples (gas collecting bottle) or by gas collecting bottles plus NIOSH type charcoal tubes.

Emission rates were determined through the use of soap sprayers and tenting techniques. Consult Reference 3 for further details.

Data Qualification

The above mentioned profiles and emission rates may be used to characterize the fugitive emissions resulting from leaky pump and compressor seals in a refinery. Each profile identifies the applicable process fluid associated with the leaking pump or compressor seal.

DECEMBER 14, 1978 TABLE 3-06-008P INDUSTRIAL PROCESS, PETROLEUM INDUSTRY, REFINERY MISCELLANEOUS
PUMP SEALS, COMPOPSITE
DATA CONFIDENCE LEVEL: III

CONTROL DEVICE: NONE
PROCESS MODIFICATION: NONE
KVB PROFILE KEY 0321

LINE NO.	SAROAD CODE	CHEMICAL NAME	MOLECULAR WEIGHT	PERCENT WEIGHT	PERCENT VOLUME	CHEMICAL CLASSIFICATION	
1	43105	ISOMERS OF HEXANE	86.17	5.50	4.72	1	PARAFFIN
2	43106	ISOMERS OF HEPTANE	100.20	4.10	3.03	1	PARAFFIN
3	43107	ISOMERS OF OCTANE	114.23	2.80	1.85	1	PARAFFIN
4	43108	ISOMERS OF NONANE	128.25	3.10	1.77	1	PARAFFIN
5	43109	ISOMERS OF DECANE	142.28	1.90	.96	1	PARAFFIN
6	43115	C-7 CYCLOPARAFFINS	98.19	1.10	.81	1	PARAFFIN
7	43116	C-8 CYCLOPARAFFINS	112.23	.10	.07	1	PARAFFIN
8	43117	C-9 CYCLOPARAFFINS	126.26	.80	.44	1	PARAFFIN
9	43122	ISOMERS OF PENTANE	72.15	6.60	6.79	1	PARAFFIN
10	43204	PROPANE	44.09	3.70	6.20	1	PARAFFIN
11	43212	N-BUTANE	58.12	7.90	10.04	1	PARAFFIN
12	43212	N-BUTANE	58.12	.20	.22	1	PARAFFIN
13	43214	ISOBUTANE	58.12	.80	1.03	1	PARAFFIN
14	43220	N-PENTANE	72.15	11.10	11.37	1	PARAFFIN
15	43231	N-HEXANE	86.17	11.00	9.45	1	PARAFFIN
16	43232	N-HEPTANE	100.20	8.50	6.27	1	PARAFFIN
17	43233	N-OCTANE	114.23	12.00	7.75	1	PARAFFIN
18	43235	N-NONANE	128.25	3.90	2.21	1	PARAFFIN
19	43238	N-DECANE	142.28	5.10	2.66	1	PARAFFIN
20	43248	CYCLOHEXANE	84.16	.50	.44	1	PARAFFIN
21	45102	ISOMERS OF XYLENE	106.16	1.30	.89	3	AROMATIC
22	45202	TOLUENE	92.13	3.00	2.44	3	AROMATIC
23	43201	METHANE	16.04	3.30	15.20	6	METHANE
24	43202	ETHANE	30.07	1.20	2.95	7	NON-REACTIVE
25	45201	BENZENE	78.11	.50	.44	7	NON-REACTIVE
		TOTAL		100.00	100.00		
	20	COMPOUNDS OF CLASSIFICATION 1	85.74	90.70	78.08		
	0	COMPOUNDS OF CLASSIFICATION 2	.00	.00	.00		
	2	COMPOUNDS OF CLASSIFICATION 3	95.88	4.30	3.33		
	0	COMPOUNDS OF CLASSIFICATION 4	.00	.00	.00		
	0	COMPOUNDS OF CLASSIFICATION 5	.00	.00	.00		
	1	COMPOUNDS OF CLASSIFICATION 6	16.04	3.30	15.20		
	2	COMPOUNDS OF CLASSIFICATION 7	36.31	1.70	3.39		
	25	COMPOUND COMPOSITE	73.81	100.00	100.00		

NOTES: A. METHOD: CALCULATIONS FROM COMPOSITE SURVEY DATA ENGINEERING EVALUATION OF KVB TEST DATA
B. REFERENCES: KVB TEST DATA (REF. 3)

DECEMBER 14, 1978 TABLE 3-06-008Q INDUSTRIAL PROCESS, PETROLEUM INDUSTRY, REFINERY MISCELLANEOUS
PUMP SEALS, STRAIGHT RUN GASOLINE
DATA CONFIDENCE LEVEL: III

CONTROL DEVICE: NONE
PROCESS MODIFICATION: NONE
KVB PROFILE KEY 0312

LINE NO.	SAROAD CODE	CHEMICAL NAME	MOLECULAR WEIGHT	PERCENT WEIGHT	PERCENT VOLUME	CHEMICAL CLASSIFICATION	
1	43105	ISOMERS OF HEXANE	86.17	1.10	1.42	1	PARAFFIN
2	43106	ISOMERS OF HEPTANE	100.20	3.40	3.72	1	PARAFFIN
3	43107	ISOMERS OF OCTANE	114.23	4.70	4.49	1	PARAFFIN
4	43108	ISOMERS OF NONANE	128.25	8.50	7.23	1	PARAFFIN
5	43109	ISOMERS OF DECANE	142.28	2.60	1.97	1	PARAFFIN
6	43115	C-7 CYCLOPARAFFINS	98.19	1.00	1.10	1	PARAFFIN
7	43116	C-8 CYCLOPARAFFINS	112.23	.20	.22	1	PARAFFIN
8	43117	C-9 CYCLOPARAFFINS	126.26	2.60	2.30	1	PARAFFIN
9	43204	PROPANE	44.09	.20	.55	1	PARAFFIN
10	43212	N-BUTANE	58.12	70	1.31	1	PARAFFIN
11	43214	ISOBUTANE	58.12	.10	.22	1	PARAFFIN
12	43220	N-PENTANE	72.15	1.30	1.97	1	PARAFFIN
13	43231	N-HEXANE	86.17	3.20	4.05	1	PARAFFIN
14	43232	N-HEPTANE	100.20	1.40	1.53	1	PARAFFIN
15	43233	N-OCTANE	114.23	58.10	55.75	1	PARAFFIN
16	43235	N-NONANE	128.25	2.80	2.41	1	PARAFFIN
17	43248	CYCLOHEXANE	84.16	.90	1.20	1	PARAFFIN
18	45102	ISOMERS OF XYLENE	106.16	2.60	2.74	3	AROMATIC
19	45202	TOLUENE	92.13	3.20	3.83	3	AROMATIC
20	45201	BENZENE	78.11	1.40	1.97	7	NON-REACTIVE
		TOTAL		100.00	99.98		
	17	COMPOUNDS OF CLASSIFICATION 1	111.27	92.80	91.44		
	0	COMPOUNDS OF CLASSIFICATION 2	.00	.00	.00		
	2	COMPOUNDS OF CLASSIFICATION 3	97.98	5.80	6.57		
	0	COMPOUNDS OF CLASSIFICATION 4	.00	.00	.00		
	0	COMPOUNDS OF CLASSIFICATION 5	.00	.00	.00		
	0	COMPOUNDS OF CLASSIFICATION 6	.00	.00	.00		
	1	COMPOUNDS OF CLASSIFICATION 7	78.11	1.40	1.97		
	20	COMPOUND COMPOSITE	109.74	100.00	99.98		

NOTES: A. METHOD: CALCULATIONS FROM COMPOSITE SURVEY DATA ENGINEERING EVALUATION OF KVB TEST DATA
B. REFERENCES: KVB TEST DATA (REF 3)
C. APPLICABLE SCC CATEGORIES: 3-06-008-03

DECEMBER 14, 1978 TABLE 3-06-008R INDUSTRIAL PROCESS, PETROLEUM INDUSTRY, REFINERY MISCELLANEOUS
PUMP SEALS, CRACKED GASOLINE
DATA CONFIDENCE LEVEL: III

CONTROL DEVICE: NONE
PROCESS MODIFICATION: NONE
KVB PROFILE KEY 0310

LINE NO.	SAROAD CODE	CHEMICAL NAME	MOLECULAR WEIGHT	PERCENT WEIGHT	PERCENT VOLUME	CHEMICAL CLASSIFICATION	
1	43105	ISOMERS OF HEXANE	86.17	12.80	12.21	1	PARAFFIN
2	43107	ISOMERS OF OCTANE	114.23	4.10	2.95	1	PARAFFIN
3	43108	ISOMERS OF NONANE	128.25	.20	.16	1	PARAFFIN
4	43115	C-7 CYCLOPARAFFINS	98.19	3.90	3.28	1	PARAFFIN
5	43117	C-9 CYCLOPARAFFINS	126.26	.30	.16	1	PARAFFIN
6	43122	ISOMERS OF PENTANE	72.15	21.40	24.34	1	PARAFFIN
7	43212	N-BUTANE	58.12	1.10	1.56	1	PARAFFIN
8	43220	N-PENTANE	72.15	19.70	22.38	1	PARAFFIN
9	43231	N-HEXANE	86.17	15.40	14.67	1	PARAFFIN
10	43232	N-HEPTANE	100.20	14.90	12.21	1	PARAFFIN
11	43213	BUTENE	56.10	1.10	1.64	2	OLEFIN
12	45102	ISOMERS OF XYLENE	106.16	1.60	1.23	3	AROMATIC
13	45202	TOLUENE	92.13	3.00	2.70	3	AROMATIC
14	45201	BENZENE	78.11	.50	.49	7	NON-REACTIVE
		TOTAL		100.00	99.98		
	10	COMPOUNDS OF CLASSIFICATION 1	82.00	93.80	93.92		
	1	COMPOUNDS OF CLASSIFICATION 2	56.10	1.10	1.64		
	2	COMPOUNDS OF CLASSIFICATION 3	96.52	4.60	3.93		
	0	COMPOUNDS OF CLASSIFICATION 4	.00	.00	.00		
	0	COMPOUNDS OF CLASSIFICATION 5	.00	.00	.00		
	0	COMPOUNDS OF CLASSIFICATION 6	.00	00	.00		
	1	COMPOUNDS OF CLASSIFICATION 7	78.11	.50	.49		
	14	COMPOUND COMPOSITE	82.12	100.00	99.98		

NOTES: A. METHOD: CALCULATIONS FROM COMPOSITE SURVEY DATA ENGINEERING EVALUATION OF KVB TEST DATA
B. REFERENCES: KVB TEST DATA (REF. 3)
C. APPLICABLE SCC CATEGORIES: 3-06-008-03

DECEMBER 14, 1978 TABLE 3-06-008S INDUSTRIAL PROCESS, PETROLEUM INDUSTRY, REFINERY MISCELLANEOUS
PUMP SEALS, GAS-OIL STOCK
DATA CONFIDENCE LEVEL: III

CONTROL DEVICE: NONE
PROCESS MODIFICATION: NONE
KVB PROFILE KEY 0313

LINE NO.	SAROAD CODE	CHEMICAL NAME	MOLECULAR WEIGHT	PERCENT WEIGHT	PERCENT VOLUME	CHEMICAL CLASSIFICATION	
1	43105	ISOMERS OF HEXANE	86.17	6.00	4.00	1	PARAFFIN
2	43106	ISOMERS OF HEPTANE	100.20	16.00	9.15	1	PARAFFIN
3	43122	ISOMERS OF PENTANE	72.15	3.80	3.03	1	PARAFFIN
4	43204	PROPANE	44.09	3.30	4.29	1	PARAFFIN
5	43212	N-BUTANE	58.12	6.50	6.40	1	PARAFFIN
6	43220	N-PENTANE	72.15	7.40	5.89	1	PARAFFIN
7	43231	N-HEXANE	86.17	11.80	7.83	1	PARAFFIN
8	43232	N-HEPTANE	100.20	8.30	4.75	1	PARAFFIN
9	43233	N-OCTANE	114.23	7.90	3.95	1	PARAFFIN
10	43235	N-NONANE	128.25	4.40	1.94	1	PARAFFIN
11	43238	N-DECANE	142.28	3.50	1.43	1	PARAFFIN
12	45202	TOLUENE	92.13	7.30	4.52	3	AROMATIC
13	43201	METHANE	16.04	10.00	35.62	6	METHANE
14	43202	ETHANE	30.07	3.80	7.20	7	NON-REACTIVE
		TOTAL		100.00	100.00		
	11	COMPOUNDS OF CLASSIFICATION 1	85.84	78.90	52.66		
	0	COMPOUNDS OF CLASSIFICATION 2	.00	.00	.00		
	1	COMPOUNDS OF CLASSIFICATION 3	92.13	7.30	4.52		
	0	COMPOUNDS OF CLASSIFICATION 4	.00	.00	.00		
	0	COMPOUNDS OF CLASSIFICATION 5	.00	.00	.00		
	1	COMPOUNDS OF CLASSIFICATION 6	16.04	10.00	35.62		
	1	COMPOUNDS OF CLASSIFICATION 7	30.07	3.80	7.20		
	14	COMPOUND COMPOSITE	57.25	100.00	100.00		

NOTES: A. METHOD CALCULATIONS FROM COMPOSITE SURVEY DATA ENGINEERING EVALUATION OF KVB TEST DATA
B. REFERENCES KVB TEST DATA (REF. 3)
C. APPLICABLE SCC CATEGORIES: 3-06-008-03

DECEMBER 14, 1978 TABLE 3-06-008T INDUSTRIAL PROCESS, PETROLEUM INDUSTRY, REFINERY MISCELLANEOUS
PUMP SEALS, REFORMATE STOCK
DATA CONFIDENCE LEVEL: III

CONTROL DEVICE: NONE
PROCESS MODIFICATION: NONE
KVB PROFILE KEY 0314

LINE NO.	SAROAD CODE	CHEMICAL NAME	MOLECULAR WEIGHT	PERCENT WEIGHT	PERCENT VOLUME	CHEMICAL CLASSIFICATION	
1	43204	PROPANE	44.09	13.90	21.33	1	PARAFFIN
2	43212	N-BUTANE	58.12	24.70	28.77	1	PARAFFIN
3	43220	N-PENTANE	72.15	21.50	20.18	1	PARAFFIN
4	43231	N-HEXANE	86.17	19.30	15.17	1	PARAFFIN
5	43232	N-HEPTANE	100.20	10.00	6.77	1	PARAFFIN
6	43233	N-OCTANE	114.23	9.70	5.75	1	PARAFFIN
7	43202	ETHANE	30.07	.90	2.03	7	NON-REACTIVE
		TOTAL		100.00	100.00		
	6	COMPOUNDS OF CLASSIFICATION 1	68.50	99.10	97.97		
	0	COMPOUNDS OF CLASSIFICATION 2	.00	.00	.00		
	0	COMPOUNDS OF CLASSIFICATION 3	.00	.00	.00		
	0	COMPOUNDS OF CLASSIFICATION 4	.00	.00	.00		
	0	COMPOUNDS OF CLASSIFICATION 5	.00	.00	.00		
	0	COMPOUNDS OF CLASSIFICATION 6	.00	.00	.00		
	1	COMPOUNDS OF CLASSIFICATION 7	30.07	.90	2.03		
	7	COMPOUND COMPOSITE	67.72	100.00	100.00		

NOTES: A. METHOD: CALCULATIONS FROM COMPOSITE SURVEY DATA ENGINEERING EVALUATION OF KVB TEST DATA
B. REFERENCES: KVB TEST DATA (REF. 3)
C. APPLICABLE SCC CATEGORIES: 3-06-008-03

DECEMBER 14, 1978 TABLE 3-06-008U INDUSTRIAL PROCESS, PETROLEUM INDUSTRY, REFINERY MISCELLANEOUS
PUMP SEALS, DISTILLATE
DATA CONFIDENCE LEVEL: III

CONTROL DEVICE: NONE
PROCESS MODIFICATION: NONE
KVB PROFILE KEY 0311

LINE NO.	SAROAD CODE	CHEMICAL NAME	MOLECULAR WEIGHT	PERCENT WEIGHT	PERCENT VOLUME	CHEMICAL CLASSIFICATION	
1	43105	ISOMERS OF HEXANE	86.17	3.00	2.45	1	PARAFFIN
2	43106	ISOMERS OF HEPTANE	100.20	2.00	1.40	1	PARAFFIN
3	43107	ISOMERS OF OCTANE	114.23	3.00	1.82	1	PARAFFIN
4	43108	ISOMERS OF NONANE	128.25	.50	.28	1	PARAFFIN
5	43122	ISOMERS OF PENTANE	72.15	5.00	4.83	1	PARAFFIN
6	43204	PROPANE	44.09	5.30	8.40	1	PARAFFIN
7	43212	N-BUTANE	58.12	12.70	15.34	1	PARAFFIN
8	43214	ISOBUTANE	58.12	2.50	3.01	1	PARAFFIN
9	43220	N-PENTANE	72.15	11.00	10.71	1	PARAFFIN
10	43231	N-HEXANE	86.17	9.00	7.28	1	PARAFFIN
11	43232	N-HEPTANE	100.20	8.60	6.02	1	PARAFFIN
12	43233	N-OCTANE	114.23	9.90	6.09	1	PARAFFIN
13	43235	N-NONANE	128.25	6.50	3.57	1	PARAFFIN
14	43238	N-DECANE	142.28	14.80	7.28	1	PARAFFIN
15	43248	CYCLOHEXANE	84.16	1.00	.84	1	PARAFFIN
16	43201	METHANE	16.04	4.20	18.35	6	METHANE
17	43202	ETHANE	30.07	1.00	2.31	7	NON-REACTIVE
		TOTAL		100.00	99.98		
	15	COMPOUNDS OF CLASSIFICATION 1	83.76	94.80	79.32		
	0	COMPOUNDS OF CLASSIFICATION 2	.00	.00	.00		
	0	COMPOUNDS OF CLASSIFICATION 3	.00	.00	.00		
	0	COMPOUNDS OF CLASSIFICATION 4	.00	.00	.00		
	0	COMPOUNDS OF CLASSIFICATION 5	.00	.00	.00		
	1	COMPOUNDS OF CLASSIFICATION 6	16.04	4.20	18.35		
	1	COMPOUNDS OF CLASSIFICATION 7	30.07	1.00	2.31		
	17	COMPOUND COMPOSITE	70.09	100.00	99.98		

NOTES: A. METHOD: CALCULATIONS FROM COMPOSITE SURVEY DATA ENGINEERING EVALUATION OF KVB TEST DATA
B. REFERENCES: KVB TEST DATA (REF. 3)
C. APPLICABLE SCC CATEGORIES: 3-06-008-03

DECEMBER 14, 1978 TABLE 3-06-008V INDUSTRIAL PROCESS, PETROLEUM INDUSTY, REFINERY MISCELLANEOUS
PUMP SEALS, NAPHTHA
DATA CONFIDENCE LEVEL: III

CONTROL DEVICE: NONE
PROCESS MODIFICATION: NONE
KVB PROFILE KEY 0315

LINE NO.	SAROAD CODE	CHEMICAL NAME	MOLECULAR WEIGHT	PERCENT WEIGHT	PERCENT VOLUME	CHEMICAL CLASSIFICATION	
1	43105	ISOMERS OF HEXANE	86.17	6.60	8.43	1	PARAFFIN
2	43107	ISOMERS OF OCTANE	114.23	5.60	5.37	1	PARAFFIN
3	43108	ISOMERS OF NONANE	128.25	20.60	17.63	1	PARAFFIN
4	43109	ISOMERS OF DECANE	142.28	16.60	12.81	1	PARAFFIN
5	43115	C-7 CYCLOPARAFFINS	98.19	2.40	2.63	1	PARAFFIN
6	43116	C-8 CYCLOPARAFFINS	112.23	.60	.55	1	PARAFFIN
7	43117	C-9 CYCLOPARAFFINS	126.26	4.80	4.16	1	PARAFFIN
8	43122	ISOMERS OF PENTANE	72.15	.40	.66	1	PARAFFIN
9	43204	PROPANE	44.09	60	1.53	1	PARAFFIN
10	43212	N-BUTANE	58.12	.60	1.10	1	PARAFFIN
11	43220	N-PENTANE	72.15	1.30	1.97	1	PARAFFIN
12	43231	N-HEXANE	86.17	6.20	7.89	1	PARAFFIN
13	43232	N-HEPTANE	100.20	1.80	1.97	1	PARAFFIN
14	43233	N-OCTANE	114.23	6.40	6.13	1	PARAFFIN
15	43235	N-NONANE	128.25	8.30	7.12	1	PARAFFIN
16	43248	CYCLOHEXANE	84.16	1.50	1.97	1	PARAFFIN
17	45102	ISOMERS OF XYLENE	106.16	7.00	7.23	3	AROMATIC
18	45202	TOLUENE	92.13	6.20	7.34	3	AROMATIC
19	45201	BENZENE	78.11	2.50	3.50	7	NON-REACTIVE
		TOTAL		100.00	99.99		
	16	COMPOUNDS OF CLASSIFICATION 1	112.87	84.30	81.92		
	0	COMPOUNDS OF CLASSIFICATION 2	.00	.00	.00		
	2	COMPOUNDS OF CLASSIFICATION 3	99.09	13.20	14.57		
	0	COMPOUNDS OF CLASSIFICATION 4	.00	.00	.00		
	0	COMPOUNDS OF CLASSIFICATION 5	.00	.00	.00		
	0	COMPOUNDS OF CLASSIFICATION 6	.00	.00	.00		
	1	COMPOUNDS OF CLASSIFICATION 7	78.11	2.50	3.50		
	19	COMPOUND COMPOSITE	109.65	100.00	99.99		

NOTES: A. METHOD: CALCULATIONS FROM COMPOSITE SURVEY DATA ENGINEERING EVALUATION OF KVB TEST DATA
B. REFERENCES: KVB TEST DATA (REF. 3)
C. APPLICABLE SCC CATEGORIES: 3-06-008-03

DECEMBER 14, 1978 TABLE 3-06-008W INDUSTRIAL PROCESS, PETROLEUM INDUSTRY, MISCELLANEOUS
PUMP SEALS, NATURAL GASOLINE
DATA CONFIDENCE LEVEL: III

CONTROL DEVICE: NONE
PROCESS MODIFICATION: NONE
KVB PROFILE KEY 0043

LINE NO.	SAROAD CODE	CHEMICAL NAME	MOLECULAR WEIGHT	PERCENT WEIGHT	PERCENT VOLUME	CHEMICAL CLASSIFICATION	
1	43105	ISOMERS OF HEXANE	86.17	12.80	9.68	1	PARAFFIN
2	43115	C-7 CYCLOPARAFFINS	98.19	17.60	11.63	1	PARAFFIN
3	43116	C-8 CYCLOPARAFFINS	112.23	5.40	3.12	1	PARAFFIN
4	43122	ISOMERS OF PENTANE	72.15	10.50	9.49	1	PARAFFIN
5	43204	PROPANE	44.09	6.20	9.16	1	PARAFFIN
6	43212	N-BUTANE	58.12	14.90	16.63	1	PARAFFIN
7	43214	ISOBUTANE	58.12	4.70	5.26	1	PARAFFIN
8	43220	N-PENTANE	72.15	10.70	9.62	1	PARAFFIN
9	43231	N-HEXANE	86.17	12.40	9.36	1	PARAFFIN
10	43201	METHANE	16.04	3.00	12.15	6	METHANE
11	43202	ETHANE	30.07	1.80	3.90	7	NON-REACTIVE
		TOTAL		100.00	100.00		
	9	COMPOUNDS OF CLASSIFICATION 1	73.71	95.20	83.95		
	0	COMPOUNDS OF CLASSIFICATION 2	.00	.00	.00		
	0	COMPOUNDS OF CLASSIFICATION 3	.00	.00	.00		
	0	COMPOUNDS OF CLASSIFICATION 4	.00	00	.00		
	0	COMPOUNDS OF CLASSIFICATION 5	.00	.00	.00		
	1	COMPOUNDS OF CLASSIFICATION 6	16.04	3.00	12.15		
	1	COMPOUNDS OF CLASSIFICATION 7	30.07	1.80	3.90		
	11	COMPOUND COMPOSITE	65.00	100.00	100.00		

NOTES: A. METHOD: CALCULATIONS FROM COMPOSITE SURVEY DATA GC-MS ANALYSIS OF GRAB SAMPLE ADJACENT TO LEAKING SEAL
B. REFERENCES: KVB TEST DATA (REF. 3)
C. APPLICABLE SCC CATEGORIES: 3-06-008-03

DECEMBER 14, 1978 TABLE 3-06-008X INDUSTRIAL PROCESS, PETROLEUM INDUSTRY, MISCELLANEOUS
PUMP SEALS, GASOLINE
DATA CONFIDENCE LEVEL: III

CONTROL DEVICE: NONE
PROCESS MODIFICATION: NONE
KVB PROFILE KEY 0038

LINE NO.	SAROAD CODE	CHEMICAL NAME	MOLECULAR WEIGHT	PERCENT WEIGHT	PERCENT VOLUME	CHEMICAL CLASSIFICATION	
1	43105	ISOMERS OF HEXANE	86.17	5.50	4.72	1	PARAFFIN
2	43106	ISOMERS OF HEPTANE	100.20	4.10	3.02	1	PARAFFIN
3	43107	ISOMERS OF OCTANE	114.23	2.80	1.84	1	PARAFFIN
4	43108	ISOMERS OF NONANE	128.25	3.10	1.77	1	PARAFFIN
5	43109	ISOMERS OF DECANE	142.28	1.90	.96	1	PARAFFIN
6	43115	C-7 CYCLOPARAFFINS	98.19	1.10	.81	1	PARAFFIN
7	43116	C-8 CYCLOPARAFFINS	112.23	.10	.07	1	PARAFFIN
8	43117	C-9 CYCLOPARAFFINS	126.26	.80	.44	1	PARAFFIN
9	43122	ISOMERS OF PENTANE	72.15	6.60	6.78	1	PARAFFIN
10	43204	PROPANE	44.09	3.70	6.19	1	PARAFFIN
11	43212	N-BUTANE	58.12	7.90	10.03	1	PARAFFIN
12	43214	ISOBUTANE	58.12	.80	1.03	1	PARAFFIN
13	43220	N-PENTANE	72.15	11.10	11.36	1	PARAFFIN
14	43231	N-HEXANE	86.17	11.00	9.44	1	PARAFFIN
15	43232	N-HEPTANE	100.20	8.50	6.27	1	PARAFFIN
16	43233	N-OCTANE	114.23	12.00	7.74	1	PARAFFIN
17	43235	N-NONANE	128.25	3.90	2.21	1	PARAFFIN
18	43238	N-DECANE	142.28	5.10	2.65	1	PARAFFIN
19	43248	CYCLOHEXANE	84.16	.50	.44	1	PARAFFIN
20	43213	BUTENE	56.10	.20	.29	2	OLEFIN
21	45102	ISOMERS OF XYLENE	106.16	1.30	.88	3	AROMATIC
22	45202	TOLUENE	92.13	3.00	2.43	3	AROMATIC
23	43201	METHANE	16.04	3.30	15.19	6	METHANE
24	43202	ETHANE	30.07	1.20	2.95	7	NON-REACTIVE
25	45201	BENZENE	78.11	.50	.44	7	NON-REACTIVE
		TOTAL		100.00	99.95		
	19	COMPOUNDS OF CLASSIFICATION 1	85.82	90.50	77.77		
	1	COMPOUNDS OF CLASSIFICATION 2	56.10	.20	.29		
	2	COMPOUNDS OF CLASSIFICATION 3	95.86	4.30	3.31		
	0	COMPOUNDS OF CLASSIFICATION 4	.00	.00	.00		
	0	COMPOUNDS OF CLASSIFICATION 5	.00	.00	.00		
	1	COMPOUNDS OF CLASSIFICATION 6	16.04	3.30	15.19		
	2	COMPOUNDS OF CLASSIFICATION 7	36.31	1.70	3.39		
	25	COMPOUND COMPOSITE	73.78	100.00	99.95		

NOTES: A. METHOD: CALCULATIONS FROM COMPOSITE SURVEY DATA GC-MS ANALYSIS OF GRAB SAMPLE TAKEN AT PUMP SEAL
B. REFERENCES: KVB TEST DATA (REF. 3)
C. APPLICABLE SCC CATEGORIES: 3-06-008-03

DECEMBER 14, 1978 TABLE 3-06-008Y

INDUSTRIAL PROCESS, PETROLEUM INDUSTRY, MISCELLANEOUS
COMPRESSOR SEALS, WET AND DRY NATURAL GAS
DATA CONFIDENCE LEVEL: IV

CONTROL DEVICE: NONE
PROCESS MODIFICATION: NONE
KVB PROFILE KEY 0044

LINE NO.	SAROAD CODE	CHEMICAL NAME	MOLECULAR WEIGHT	PERCENT WEIGHT	PERCENT VOLUME	CHEMICAL CLASSIFICATION	
1	43122	ISOMERS OF PENTANE	72.15	2.50	.83	1	PARAFFIN
2	43204	PROPANE	44.09	18.00	9.63	1	PARAFFIN
3	43212	N-BUTANE	58.12	8.20	3.33	1	PARAFFIN
4	43214	ISOBUTANE	58.12	4.50	1.82	1	PARAFFIN
5	43220	N-PENTANE	72.15	1.80	.59	1	PARAFFIN
6	43231	N-HEXANE	86.17	1.00	.28	1	PARAFFIN
7	43201	METHANE	16.04	48.40	71.26	6	METHANE
8	43202	ETHANE	30.07	15.60	12.26	7	NON-REACTIVE
		TOTAL		100.00	100.00		
	6	COMPOUNDS OF CLASSIFICATION 1	51.61	36.00	16.48		
	0	COMPOUNDS OF CLASSIFICATION 2	.00	.00	.00		
	0	COMPOUNDS OF CLASSIFICATION 3	.00	.00	.00		
	0	COMPOUNDS OF CLASSIFICATION 4	.00	.00	.00		
	0	COMPOUNDS OF CLASSIFICATION 5	.00	.00	.00		
	1	COMPOUNDS OF CLASSIFICATION 6	16.04	48.40	71.26		
	1	COMPOUNDS OF CLASSIFICATION 7	30.07	15.60	12.26		
	8	COMPOUND COMPOSITE	23.62	100.00	100.00		

NOTES:
A. METHOD: CALCULATIONS FROM COMPOSITE SURVEY DATA GC-MS ANALYSIS OF GRAB SAMPLE TAKEN AT LEAKING SEAL
B. REFERENCES: KVB TEST DATA (REF. 3)
C. APPLICABLE SCC CATEGORIES: 3-06-008-04

DECEMBER 14, 1978 TABLE 3-06-008Z INDUSTRIAL PROCESS, PETROLEUM INDUSTRY, MISCELLANEOUS
COMPRESSOR SEALS, REFINERY GAS
DATA CONFIDENCE LEVEL: IV

CONTROL DEVICE: NONE
PROCESS MODIFICATION: NONE
KVB PROFILE KEY 0039

LINE NO.	SARGAD CODE	CHEMICAL NAME	MOLECULAR WEIGHT	PERCENT WEIGHT	PERCENT VOLUME	CHEMICAL CLASSIFICATION	
1	43105	ISOMERS OF HEXANE	86.17	1.00	.49	1	PARAFFIN
2	43106	ISOMERS OF HEPTANE	100.20	.10	.04	1	PARAFFIN
3	43122	ISOMERS OF PENTANE	72.15	8.60	4.82	1	PARAFFIN
4	43204	PROPANE	44.09	16.00	14.70	1	PARAFFIN
5	43212	N-BUTANE	58.12	23.20	16.16	1	PARAFFIN
6	43214	ISOBUTANE	58.12	10.00	6.97	1	PARAFFIN
7	43220	N-PENTANE	72.15	7.60	4.25	1	PARAFFIN
8	43231	N-HEXANE	86.17	4.60	2.15	1	PARAFFIN
9	43205	PROPYLENE	42.08	8.80	8.46	2	OLEFIN
10	43213	BUTENE	56.10	1.20	.85	2	OLEFIN
11	43201	METHANE	16.04	13.30	33.58	6	METHANE
12	43202	ETHANE	30.07	5.60	7.53	7	NON-REACTIVE
		TOTAL		100.00	100.00		
	8	COMPOUNDS OF CLASSIFICATION 1	58.05	71.10	49.58		
	2	COMPOUNDS OF CLASSIFICATION 2	43.36	10.00	9.31		
	0	COMPOUNDS OF CLASSIFICATION 3	.00	.00	.00		
	0	COMPOUNDS OF CLASSIFICATION 4	.00	.00	.00		
	0	COMPOUNDS OF CLASSIFICATION 5	.00	.00	.00		
	1	COMPOUNDS OF CLASSIFICATION 6	16.04	13.30	33.58		
	1	COMPOUNDS OF CLASSIFICATION 7	30.07	5.60	7.53		
	12	COMPOUND COMPOSITE	40.47	100.00	100.00		

NOTES:
A. METHOD: CALCULATIONS FROM COMPOSITE SURVEY DATA GC-MS ANALYSIS OF GRAB SAMPLE TAKEN AT LEAKING SEAL
B. REFERENCES: KVB TEST DATA (REF. 3)
C. APPLICABLE SCC CATEGORIES: 3-06-008-04

REFERENCES

1. "Compilation of Pollutant Emission Factors," Environmental Protection Agency, Research Triangle Park, NC, AP-42, August 1977.

2. Danielson, J. A. (ed.), "Air Pollution Engineering Manual," Environmental Protection Agency, Research Triangle Park, NC, AP-40, May 1973.

3. Taback, H. J., et al., "Control of Hydrocarbon Emissions from Stationary Sources in the California South Coast Air Basin," Vols. I and II, KVB, Inc., Tustin, CA, June 1978.

4. "Joint District, Federal and State Project for the Evaluation of Refinery Emissions," Report No. 6, March 1957, Los Angeles APCD.

3-06-009 WASTE GAS FLARES

Process Description[4]

Modern refining processes produce large quantities of hydrocarbon gases. Every refinery must be equipped to handle excess gas production which is produced intermittently, and large volumes of hydrocarbon vapors produced very rapidly from process units during emergenices. A number of devices are utilized to recover these gases but facilities for the ultimate disposal of excess vapors are usually necessary. This is generally accomplished by combustion in waste gas flares although small amounts may be vented to the fireboxes of heaters or boilers.

The objective of combustion in a waste gas flare is the oxidation of the hydrocarbon vapors to carbon dioxide and water without the production of smoke and objectionable odors. The three common types of waste gas flares are: elevated flares, ground level flares, and open pit flares. The two major types of elevated waste gas flares used by refineries located in Los Angeles County are the air-aspirating venturi flare and the steam-injection flare, both of which are smokeless.

Emissions

The smokeless flares now in operation at most refineries appear to attain highly efficient combustion of waste gas. Actual field testing of flares is generally not feasible because of safety considerations, the erratic nature of the gas flow to flares and the inaccessibility of most flare tips. A hydrocarbon emission factor of 5 lb/10^3 bbl refinery capacity is reported in AP-42 (Ref. 1).

An estimate of the organic species emitted from a typical refinery waste flare is presented in Profile 3-06-009.

Controls

Based on the design of smokeless flares, essentially complete combustion does occur. Control for flares would amount to the conversion of a smoking type flare to a smokeless type flare, air-aspirating venturi flare or steam injected flare - followed by proper maintenance.

AP40 (Ref. 2) offers a detailed explanation of the design, application limitations of various waste gas flares. Another reference is the API Manual on Disposal of Refinery Wastes (Ref. 5).

Profile Basis[3]

Profile 3-06-009 was based on a survey and evaluation of pertinent literature.

Data Qualification

AP-42's 6.0 lb/10^3 bbl refinery capacity may be used with discretion.

Profile 3-06-009 may be used with discretion to characterize the VOC's emitted from a refinery waste-gas flare.

DECEMBER 14, 1978 TABLE 3-06-009 INDUSTRIAL PROCESS, PETROLEUM INDUSTRY, REFINERY
FLARES, NATURAL GAS
DATA CONFIDENCE LEVEL: IV

CONTROL DEVICE: NONE
PROCESS MODIFICATION: NONE
KVB PROFILE KEY 0051

LINE NO.	SAROAD CODE	CHEMICAL NAME	MOLECULAR WEIGHT	PERCENT WEIGHT	PERCENT VOLUME	CHEMICAL CLASSIFICATION	
1	43204	PROPANE	44.09	30.00	18.94	1	PARAFFIN
2	43502	FORMALDEHYDE	30.03	20.00	18.55	4	CARBONYL
3	43201	METHANE	16.04	20.00	34.73	6	METHANE
4	43202	ETHANE	30.07	30.00	27.79	7	NON-REACTIVE
		TOTAL		100.00	100.01		
	1	COMPOUNDS OF CLASSIFICATION 1	44.09	30.00	18.94		
	0	COMPOUNDS OF CLASSIFICATION 2	.00	.00	.00		
	0	COMPOUNDS OF CLASSIFICATION 3	.00	.00	.00		
	1	COMPOUNDS OF CLASSIFICATION 4	30.03	20.00	18.55		
	0	COMPOUNDS OF CLASSIFICATION 5	.00	.00	.00		
	1	COMPOUNDS OF CLASSIFICATION 6	16.04	20.00	34.73		
	1	COMPOUNDS OF CLASSIFICATION 7	30.07	30.00	27.79		
	4	COMPOUND COMPOSITE	27.85	100.00	100.01		

NOTES: A. METHOD: CALCULATIONS FROM COMPOSITE SURVEY DATA ENGINEERING EVALUATION OF LITERATURE DATA
B. REFERENCES: T.W. SONNICHSEN, KVB ENGINEER
C. APPLICABLE SCC CATEGORIES: 3-06-009-01

REFERENCES

1. "Compilation of Pollutant Emission Factors," Environmental Protection Agency, Research Triangle Park, NC, AP-42, August 1977.

2. Danielson, J. A. (ed.), "Air Pollution Engineering Manual," Environmental Protection Agency, Research Triangle Park, NC AP-40, May 1973.

3. Taback, H. J., et al., "Control of Hydrocarbon Emissions from Stationary Sources in the California South Coast Air Basin," Vols. I and II, KVB, Inc., Tustin, CA, June 1978.

4. "Joint District, Federal and State Project for the Evaluation of Refinery Emissions," Report No. 8, June 1958, Los Angeles APCD.

5. "Manual on Disposal of Refinery Wastes," Volume II, American Petroleum Institute, Div. of Refining, Washington, D.C., 5th Ed., 1957.

3-06 INDUSTRIAL PROCESS, PETROLEUM INDUSTRY

3-06-013 CATALYTIC REFORMING

Process Description[1]

In reforming processes, a feed stock of gasoline undergoes molecular rearrangement by means of catalysis (usually including hydrogen removal) to produce a gasoline of higher quality and higher octane number. In various fixed-bed and fluidized-bed processes, the catalyst is regenerated continuously in a manner similar to that used with cracking units.

Emissions

Hydrocarbon emissions emanating from fixed bed catalytic reforming units result mainly from leaking peripheral equipment such as valves, fittings, flanges and pump seals.

Emission rates for valves, flanges, pumps and fittings are discussed in Section 3-06-008A and B.

The hydrocarbon specie emissions data applicable to the above mentioned equipment associated with a catalytic reforming unit are presented in Profile 3-06-013.

Controls

See Section 3-06-008A and B.

Profile Basis[3]

Data contained within profile 3-06-013 were developed through an engineering evaluation of similar test data--leaky catalytic reformer unit valve and a leaky crude heater pump seal.

Data Qualification

Profile 3-06-013 may be used to charaterize the hydrocarbon emissions data from a catalytic reformer and associated peripheral equipment.

DECEMBER 14, 1978 TABLE 3-06-013 INDUSTRIAL PROCESS, PETROLEUM INDUSTRY, REFINERY
CATALYTIC REFORMER, GENERAL FUGITIVE EMISSIONS
DATA CONFIDENCE LEVEL: III

CONTROL DEVICE: NONE
PROCESS MODIFICATION: NONE
KVB PROFILE KEY 0053

LINE NO.	SAROAD CODE	CHEMICAL NAME	MOLECULAR WEIGHT	PERCENT WEIGHT	PERCENT VOLUME	CHEMICAL CLASSIFICATION	
1	43105	ISOMERS OF HEXANE	86.17	.80	.44	1	PARAFFIN
2	43107	ISOMERS OF OCTANE	114.23	70	.29	1	PARAFFIN
3	43108	ISOMERS OF NONANE	128.25	2.50	.97	1	PARAFFIN
4	43109	ISOMERS OF DECANE	142.28	2.00	.68	1	PARAFFIN
5	43115	C-7 CYCLOPARAFFINS	98.19	.30	.15	1	PARAFFIN
6	43117	C-9 CYCLOPARAFFINS	126.26	.60	.24	1	PARAFFIN
7	43122	ISOMERS OF PENTANE	72.15	90	.63	1	PARAFFIN
8	43204	PROPANE	44.09	26.70	29.30	1	PARAFFIN
9	43212	N-BUTANE	58.12	22.60	18.81	1	PARAFFIN
10	43214	ISOBUTANE	58.12	20.70	17.21	1	PARAFFIN
11	43220	N-PENTANE	72.15	20	.15	1	PARAFFIN
12	43231	N-HEXANE	86.17	.80	.44	1	PARAFFIN
13	43232	N-HEPTANE	100.20	.20	.10	1	PARAFFIN
14	43233	N-OCTANE	114.23	.80	.34	1	PARAFFIN
15	43235	N-NONANE	128.25	1.00	.39	1	PARAFFIN
16	43248	CYCLOHEXANE	84.16	.20	.10	1	PARAFFIN
17	45102	ISOMERS OF XYLENE	106.16	.80	.39	3	AROMATIC
18	45202	TOLUENE	92.13	.80	.44	3	AROMATIC
19	43201	METHANE	16.04	.90	2.71	6	METHANE
20	43202	ETHANE	30.07	16.20	26.06	7	NON-REACTIVE
21	45201	BENZENE	78.11	.30	.19	7	NON-REACTIVE
		TOTAL		100.00	100.03		
	16	COMPOUNDS OF CLASSIFICATION 1	55.87	81.00	70.24		
	0	COMPOUNDS OF CLASSIFICATION 2	.00	.00	.00		
	2	COMPOUNDS OF CLASSIFICATION 3	98.72	1.60	.83		
	0	COMPOUNDS OF CLASSIFICATION 4	.00	.00	.00		
	0	COMPOUNDS OF CLASSIFICATION 5	.00	.00	.00		
	1	COMPOUNDS OF CLASSIFICATION 6	16.04	.90	2.71		
	2	COMPOUNDS OF CLASSIFICATION 7	30.42	16.50	26.25		
	21	COMPOUND COMPOSITE	48.46	100.00	100.03		

NOTES: A. METHOD: CALCULATIONS FROM COMPOSITE SURVEY DATA GC-MS ANALYSIS OF SAMPLING TRAIN CATCH
B. REFERENCES: KVB TEST DATA (REF. 3)
C. APPLICABLE SCC CATEGORIES: 3-06-013-01

REFERENCES

1. "Compilation of Pollutant Emission Factors," Environmental Protection Agency, Research Triangle Park, NC, AP-42, August 1977.

2. Danielson, J. A. (ed.), "Air Pollution Engineering Manual," Environmental Protection Agency, Research Triangle Park, NC AP-40, May 1973.

3. Taback, H. J., et al., "Control of Hydrocarbon Emissions from Stationary Sources in the California South Coast Air Basin," Vols. I and II, KVB, Inc., Tustin, CA, June 1978.

3-30 INDUSTRIAL PROCESS, TEXTILE MANUFACTURING

3-30-001 GENERAL FABRICS--YARN DYEING

Process Description

Fabric dyeing involves the chemical bonding of a dyeing agent to the fabric to produce a durable color change. In general, fabrics are dyed in vats or spray chambers.

Emissions[1]

Evaporation of the low boiling point solvents in the chemical dye formulation may result in the emission of volatile organic vapors to the atmosphere if left uncontrolled. A thorough discussion of the methods employable to calculate the VOC emission rates from various solvent based operations is presented in Section 12 of AP-40 (Ref. 1).

Profile 3-30-001 presents the estimated volatile organic specie emissions from a textile dyeing operation.

Controls[1]

As in all solvent vapor control situations, control generally takes the form of condensers, air curtains or lids, charcoal adsorbers, or afterburners. Each situation and allowable emission limits dictate generally what control avenue to pursue. A thorough discussion of solvent vapor control equipment is offered in Section 12 of AP-40 (Section 1).

Profile Basis[2]

Profile 3-30-001 is based on an engineering evaluation of a textile dyeing manufacturer's solvent use and control questionnaire.

Data Qualifications

Profile 3-30-001 may be used with discretion to characterize the volatile organic emissions from an uncontrolled textile dyeing operation.

DECEMBER 14, 1978 TABLE 3-30-001

INDUSTRIAL PROCESS, TEXTILE MANUFACTURING
FABRIC DYEING, GENERAL
DATA CONFIDENCE LEVEL: IV

CONTROL DEVICE: NONE
PROCESS MODIFICATION: NONE
KVB PROFILE KEY 0060

LINE NO.	SAROAD CODE	CHEMICAL NAME	MOLECULAR WEIGHT	PERCENT WEIGHT	PERCENT VOLUME	CHEMICAL CLASSIFICATION	
1	43551	ACETONE	58.08	20.00	21.64	4	CARBONYL
2	43552	METHYL ETHYL KETONE	72.10	21.40	18.68	4	CARBONYL
3	43560	METHYL ISOBUTYL KETONE	100.16	8.60	5.41	4	CARBONYL
4	43301	METHYL ALCOHOL	32.04	5.60	11.01	5	MISCELLANEOUS
5	43302	ETHYL ALCOHOL	46.07	4.50	6.16	5	MISCELLANEOUS
6	43304	ISOPROPYL ALCOHOL	60.09	16.40	17.17	5	MISCELLANEOUS
7	43305	N-BUTYL ALCOHOL	74.12	23.50	19.94	5	MISCELLANEOUS
		TOTAL		100.00	100.01		
	0	COMPOUNDS OF CLASSIFICATION 1	.00	.00	.00		
	0	COMPOUNDS OF CLASSIFICATION 2	.00	.00	.00		
	0	COMPOUNDS OF CLASSIFICATION 3	.00	.00	.00		
	3	COMPOUNDS OF CLASSIFICATION 4	68.79	50.00	45.73		
	4	COMPOUNDS OF CLASSIFICATION 5	57.96	50.00	54.28		
	0	COMPOUNDS OF CLASSIFICATION 6	.00	.00	.00		
	0	COMPOUNDS OF CLASSIFICATION 7	.00	.00	.00		
	7	COMPOUND COMPOSITE	62.91	100.00	100.01		

NOTES: A. METHOD: CALCULATIONS FROM COMPOSITE SURVEY DATA ENGINEERING EVALUATION OF LITERATURE DATA
B. REFERENCES: FABRIC DYE MANUFACTURER
C. APPLICABLE SCC CATEGORIES: 3-30-001-99

REFERENCES

1. Danielson, J. A. (ed.), "Air Pollution Engineering Manual," Environmental Protection Agency, Research Triangle Park, NC, AP-40, May 1973.

2. Taback. H. J., et al., "Control of Hydrocarbon Emissions from Stationary Sources in the California South Coast Air Basin," Vol. I and II, KVB, Inc., Tustin, CA, June 1978

3-90 INDUSTRIAL PROCESS, IN PROCESS FUEL

3-90-007 PROCESS--COKE OVEN GAS

Process Description[1]

Approximately 40% by volume of the byproduct given off during the destructive distillation of the coal in a coproduct type coking oven is reused as fuel. The byproduct gas is first stripped of its coproducts and then returned and burned for the under firing of the coke oven batteries. (See Section 3-03-003.) Coproduct ovens generally hold from 16 to 24 tons of coal and are built in batteries of 10 to 100 ovens. Once the coke ovens are fired, they are not allowed to cool down unless their replacement is required.

Emissions[2]

Hydrocarbon emissions result from the burning of the stripped coke oven gas for the under firing of the coke batteries. The combustion exhaust gases from each oven are manifolded together and vented through a common stack.

An average hydrocarbon emission rate of 0.6 $lb/10^3$ ACF coke oven gas fired at a HHV of 550 Btu/ft^3 was reported. The coke oven battery tested consisted of 45 individual coke ovens with a reported fuel rate of 150,000 CFH, a stack gas flow rate of 2.4×10^6 SCFM and a HC emissions rate of 8.8 lb/hr. Approximately 83% by weight of this is methane (Ref. 2).

Consult Reference 3 for further emissions information.

Profile 3-90-007 presents the hydrocarbon emission species detected (Ref. 2).

Controls[3]

Controls associated with coking operations are generally concerned with the visible and invisible emissions connected with the destructive distillation of the coal and not from the under firing of the coke batteries. Improvement of combustion efficiency would be a proper method of control.

Profile Basis[2]

The hydrocarbon species data presented in Profile 3-90-007 represents test data obtained from a typical coproduct type coke oven battery. Gas samples were taken from within the exhaust stack servicing 45 ovens under fired with stripped coke oven gas. The gas collection train consisted of a glass collecting bottle followed by NIOSH type charcoal tubes.

Process information such as fuel flow and exhaust gas flow rate were obtained from the steel manufacturer.

Data Qualification

This profile may be used to characterize the hydrocarbon emissions from a typical coproduct type coke oven using stripped coke oven gas for under firing of the coke batteries. This profile does not represent the fugitive unstripped coke oven gas emissions that occur in a coproduct type battery -- leaky door and lid seals, leaky valves, fittings, etc. For this type of specie data, refer to Profile 3-03-003.

DECEMBER 14, 1978 TABLE 3-90-007

INDUSTRIAL PROCESS, INPROCESS FUEL, PROCESS GAS
COKE OVEN BLAST-FURNACE GAS
DATA CONFIDENCE LEVEL: II

CONTROL DEVICE: NONE
PROCESS MODIFICATION: NONE
KVB PROFILE KEY 0217

LINE NO.	SAROAD CODE	CHEMICAL NAME	MOLECULAR WEIGHT	PERCENT WEIGHT	PERCENT VOLUME	CHEMICAL CLASSIFICATION	
1	43203	ETHYLENE	28.05	2.80	2.86	2	OLEFIN
2	43205	PROPYLENE	42.08	5.50	3.75	2	OLEFIN
3	43213	BUTENE	56.10	6.40	3.26	2	OLEFIN
4	43201	METHANE	16.04	40.90	73.00	6	METHANE
5	43202	ETHANE	30.07	1.40	1.35	7	NON-REACTIVE
6	45201	BENZENE	78.11	43.00	15.77	7	NON-REACTIVE
		TOTAL		100.00	99.99		
	0	COMPOUNDS OF CLASSIFICATION 1	.00	.00	.00		
	3	COMPOUNDS OF CLASSIFICATION 2	42.65	14.70	9.87		
	0	COMPOUNDS OF CLASSIFICATION 3	.00	.00	.00		
	0	COMPOUNDS OF CLASSIFICATION 4	.00	.00	.00		
	0	COMPOUNDS OF CLASSIFICATION 5	.00	.00	.00		
	1	COMPOUNDS OF CLASSIFICATION 6	16.04	40.90	73.00		
	2	COMPOUNDS OF CLASSIFICATION 7	74.32	44.40	17.12		
	6	COMPOUND COMPOSITE	28.65	100.00	99.99		

NOTES:
A. METHOD: CALCULATIONS FROM COMPOSITE SURVEY DATA GC-MS ANALYSIS OF SAMPLING TRAIN CATCH
B. REFERENCES: KVB TEST DATA (REF. 2)
C. APPLICABLE SCC CATEGORIES: 3-90-007-01

REFERENCES

1. Shreve, R. N. and Brink, J. A., Jr., "Chemical Process Industries," 4th Ed., McGraw-Hill Book Co., 1977.

2. Taback, H. J., et al., "Control of Hydrocarbon Emissions from Stationary Sources in the California South Coast Air Basin," Vols. I and II, KVB, Inc., Tustin, CA, June 1978.

3. Coke Oven Emissions, Miscellaneous Emissions and Their Control at Kaiser Steel Corporation's Fontana Steel Making Facility, State of California, Air Resources Board, Report No. L&E-76-11.

4. Danielson, J. A. (ed.), "Air Pollution Engineering Manual, Environmental Protection Agency, Research Triangle Park, NC, AP-40, May 1973.

POINT SOURCE EVAPORATION

4-01 CLEANING SOLVENT

4-02 SURFACE COATING

4-03 PETROLEUM PRODUCT STORAGE
INCLUDING MARINE TERMINAL 4-06

4-05 PRINTING PRESS

4-01 POINT SOURCE EVAPORATION, CLEANING SOLVENT

4-01-001 DRY CLEANING--TRICHLOROETHANE
--STODDARD SOLVENT
--PERCHLOROETHYLENE

Process Description[1]

Dry cleaning involves the cleaning of fabrics with non-aqueous organic solvents. The dry cleaning process requires three steps: (1) washing the fabric in solvent, (2) spinning to extract excess solvent, and (3) drying by tumbling in a hot airstream.

Two general types of cleaning fluids are used in the industry: petroleum solvents and synthetic solvents. Petroleum solvents, such as Stoddard or 140-F, are inexpensive, combustible hydrocarbon mixtures similar to kerosene. Operations using petroleum solvents are known as petroleum plants. Synthetic solvents are nonflammable but more expensive halogenated hydrocarbons. Perchloroethylene and trichlorotrifluoroethane are the two synthetic dry cleaning solvents presently in use. Operations using these synthetic solvents are called "perc" plants and fluorocarbon plants, respectively.

There are two basic types of dry cleaning machines: transfer and dry-to-dry. Transfer machines accomplish washing and drying in separate machines. Usually the washer extracts excess solvent from the clothes before they are transferred to the dryer, however, some older petroleum plants have separate extractors for this purpose. Dry-to-dry machines are single units that perform all of the washing, extraction, and drying operations. All petroleum solvent machines are the transfer type, but synthetic solvent plants can be either type.

For further information on the dry cleaning industry and a typical dry cleaning cycle, refer to References 1 and 2.

Emissions[1]

The solvent material itself is the primary emission of concern from dry cleaning operations. Solvent is given off by the washer, dryer, solvent still, muck cooker, still residue, and filter muck storage areas, as well as leaky pipes, flanges, and pumps.

Typical emission factors for dry cleaning plants are presented in Section 4.1-1 of AP-42 (Ref. 1). Respective profiles are presented at the end of this section.

Controls[1]

Petroleum plants have generally not employed solvent recovery because of the low cost of petroleum solvents and the fire hazards associated with collecting vapors. Some emission control, however, can be obtained by maintaining all equipment in good condition (e.g., preventing lint accumulation, preventing solvent leakage, etc.) and by using good operating practices (e.g., not overloading machinery). Both carbon adsorption and incineration appear to be technically feasible controls for petroleum plants, but costs are high.

Solvent recovery is necessary in "perc" plants due to the higher cost of perchloroethylene. Recovery is effected on the washer, dryer, still, and muck cooker through the use of condensers, water/solvent separators, and carbon adsorption units. Periodically (typically once a day), solvent collected in the carbon adsorption unit is desorbed with steam, condensed, separated from the condensed water, and returned to the pure solvent storage tank. Residual solvent emitted from treated distillation bottoms and muck is not recovered. As in petroleum plants, good emission control can be obtained by good housekeeping practices (maintaining all equipment in good condition and using good operating practices).

All fluorocarbon machines are of the dry-to-dry variety to conserve solvent vapor, and all are closed systems with built-in solvent recovery. High emissions can occur, however, as a result of poor maintenance and operation of equipment. Refrigeration systems are installed on newer machines to recover solvent from the washer/dryer exhaust gases.

Profile Basis[3]

As mentioned earlier, the cleaning solvent material itself is the primary emission pollutant. The data contained in the profile for stoddard solvent represents actual test results obtained from a steam heated, tumble dryer at 180°F. The vapor collection train was composed of a gas collecting bottle followed by NIOSH type charcoal sampling tubes. Mass flow rates were measured using a standard pitot tube and thermometer.

Profiles for the three common dry cleaning solvents in use are presented at the end of this section. Refer to Profile 4-01-002 F for emissions using trichlorotrifluoroethane (Freon 113).

Data Qualification

The emission factors referred to in Section 4.1-1 of AP-42 specify the conditions under which profile applicability is valid.

DECEMBER 14, 1978 TABLE 4-01-001A POINT SOURCE EVAPORATION, CLEANING SOLVENT
DRY CLEANING, 1, 1, 1-TRICHLOROETHANE
DATA CONFIDENCE LEVEL: II

CONTROL DEVICE: NONE
PROCESS MODIFICATION: NONE
KVB PROFILE KEY 0087

LINE NO.	SAROAD CODE	CHEMICAL NAME	MOLECULAR WEIGHT	PERCENT WEIGHT	PERCENT VOLUME	CHEMICAL CLASSIFICATION
1	43814	1,1,1-TRICHLOROETHANE	133.42	100.00	100.00	7 NON-REACTIVE
		TOTAL		100.00	100.00	
	0	COMPOUNDS OF CLASSIFICATION 1	.00	.00	.00	
	0	COMPOUNDS OF CLASSIFICATION 2	.00	.00	.00	
	0	COMPOUNDS OF CLASSIFICATION 3	.00	.00	.00	
	0	COMPOUNDS OF CLASSIFICATION 4	.00	.00	.00	
	0	COMPOUNDS OF CLASSIFICATION 5	.00	.00	.00	
	0	COMPOUNDS OF CLASSIFICATION 6	.00	.00	.00	
	1	COMPOUNDS OF CLASSIFICATION 7	133.42	100.00	100.00	
	1	COMPOUND COMPOSITE	133.42	100.00	100.00	

NOTES: A. METHOD: CALCULATIONS FROM COMPOSITE SURVEY DATA INSPECTION OF SOLVENT FORMULATION
B. REFERENCES: ENGINEERING JUDGEMENT
C. APPLICABLE SCC CATEGORIES: 4-01-001-99, 4-01-002-02

DECEMBER 14, 1978 TABLE 4-01-001B POINT SOURCE EVAPORATION, CLEANING SOLVENT
DRY CLEANING, STODDARD SOLVENT
DATA CONFIDENCE LEVEL: III

CONTROL DEVICE: NONE
PROCESS MODIFICATION: NONE
KVB PROFILE KEY 0086

LINE NO.	SAROAD CODE	CHEMICAL NAME	MOLECULAR WEIGHT	PERCENT WEIGHT	PERCENT VOLUME	CHEMICAL CLASSIFICATION	
1	43107	ISOMERS OF OCTANE	114.23	.80	.97	1	PARAFFIN
2	43108	ISOMERS OF NONANE	128.25	27.30	29.42	1	PARAFFIN
3	43109	ISOMERS OF DECANE	142.28	69.30	67.27	1	PARAFFIN
4	43110	ISOMERS OF UNDECANE	156.30	2.60	2.35	1	PARAFFIN
		TOTAL		100.00	100.01		
	4	COMPOUNDS OF CLASSIFICATION 1	138.21	100.00	100.01		
	0	COMPOUNDS OF CLASSIFICATION 2	.00	.00	.00		
	0	COMPOUNDS OF CLASSIFICATION 3	.00	.00	.00		
	0	COMPOUNDS OF CLASSIFICATION 4	.00	.00	.00		
	0	COMPOUNDS OF CLASSIFICATION 5	.00	.00	.00		
	0	COMPOUNDS OF CLASSIFICATION 6	.00	.00	.00		
	0	COMPOUNDS OF CLASSIFICATION 7	.00	.00	.00		
	4	COMPOUND COMPOSITE	138.21	100.00	100.01		

NOTES:
A. METHOD: CALCULATIONS FROM COMPOSITE SURVEY DATA GC-MS ANALYSIS OF GRAB SAMPLE
B. REFERENCES: KVB TEST DATA (REF. 3)
C. APPLICABLE SCC CATEGORIES: 4-01-001-02, 4-02-002-01
D. See Appendix I-F

DECEMBER 14, 1978 TABLE 4-01-001C POINT SOURCE EVAPORATION, CLEANING SOLVENT
DRY CLEANING, PERCHLOROETHYLENE
DATA CONFIDENCE LEVEL: II

CONTROL DEVICE: NONE
PROCESS MODIFICATION: NONE
KVB PROFILE KEY 0085

LINE NO.	SAROAD CODE	CHEMICAL NAME	MOLECULAR WEIGHT	PERCENT WEIGHT	PERCENT VOLUME	CHEMICAL CLASSIFICATION
1	43817	PERCHLOROETHYLENE	165.83	100.00	100.00	5 MISCELLANEOUS
		TOTAL		100.00	100.00	
	0	COMPOUNDS OF CLASSIFICATION 1	.00	.00	.00	
	0	COMPOUNDS OF CLASSIFICATION 2	.00	.00	.00	
	0	COMPOUNDS OF CLASSIFICATION 3	.00	.00	.00	
	0	COMPOUNDS OF CLASSIFICATION 4	.00	.00	.00	
	1	COMPOUNDS OF CLASSIFICATION 5	165.83	100.00	100.00	
	0	COMPOUNDS OF CLASSIFICATION 6	.00	.00	.00	
	0	COMPOUNDS OF CLASSIFICATION 7	.00	.00	.00	
	1	COMPOUND COMPOSITE	165.83	100.00	100.00	

NOTES: A. METHOD: CALCULATIONS FROM COMPOSITE SURVEY DATA INSPECTION OF SOLVENT FORMULATION
B. REFERENCES: ENGINEERING JUDGEMENT
C. APPLICABLE SCC CATEGORIES: 4-01-001-01, 4-01-002-03

REFERENCES

1. "Compilation of Pollutant Emission Factors," Environmental Protection Agency, Research Triangle Park, NC, AP-42, August 1977.

2. Danielson, J. A. (Ed.), "Air Pollution Engineering Manual," Environmental Protection Agency, Research Triangle Park, NC., AP-40, May 1973.

3. Taback, H. J., et al., "Control of Hydrocarbon Emissions from Stationary Sources in the California South Coast Air Basin," Vol. I and II., KVB, Inc., Tustin, CA, June 1978.

4-01 POINT SOURCE EVAPORATION, CLEANING SOLVENT

4-01-002 DEGREASING--TRICHLOROETHANE
--DICHLOROMETHANE
--TRICHLOROETHYLENE
--TOLUENE
--FREON 11
--FREON 113

Process Description[1]

During the fabrication of many metal products, surfaces are lubricated with oils, greases, or stearates to facilitate various drawing, forming and machining operations. Degreasing operations are designed to remove this foreign material from the product's surface so that the applied surface coating can adhere properly.

Solvent degreasers vary in size from simple unheated wash basins to large heated conveyorized units in which articles are washed in hot solvent vapors. Solvent is usually vaporized in one portion of a tank either by electric, steam or gas heat. The vapors diffuse and fill that portion of the tank below the water-cooled condenser. At the condenser level, a definite interface between the vapor and air can be observed from the top of the tank. Solvent condensed at this level runs into the collection trough and from there to the clean-solvent receptacle in the other portion of the tank. Articles to be degreased are lowered in baskets into the vapor space of the tank. Solvent vapors condense on the cooler metal parts, and the hot condensate washes oil and grease from the parts. The contaminated condensate drains back into the heated tank from which it can be revaporized. When necessary, dirty parts are hand sprayed with hot solvent by means of a flexible hose and spray pump to aid in cleaning.

Emissions[1-3]

Solvent emissions from vapor degreasing occur primarily during loading and unloading of the degreaser. Some solvent escapes from the vapor zone during idling conditions. Daily emissions of a single spray

degreasing booth may vary from a few pounds to 1300 pounds per day. A typical metal cleaning operation using a vapor degreaser can clean 200,000 lbs of metal in one day. The table below presents controlled and uncontrolled hydrocarbon emissions from degreasing operations.

HYDROCARBON EMISSIONS FROM DEGREASING OPERATIONS

Type of Operation & Control	% Control	Metal Cleaned lbs/ton	Metal Cleaned kg/m ton	Based on 200,000 lbs of Metal Cleaned/Day lbs/hr	Based on 200,000 lbs of Metal Cleaned/Day kg/hr
Degreasing, Uncontrolled	0	1.5	0.75	6.3	2.8
Degreasing, Refrigerated Cooling Coils	30-60	1.0-0.6	0.5-0.3	4.2-2.5	1.9-1.1
Degreasing, Use of Covers	25-40	1.1-0.9	0.5-0.05	4.6-3.8	2.1-1.7
Degreasing, Carbon Adsorption	40-70	0.9-0.5	0.5-0.3	3.8-2.1	1.7-1.0

Source: Ref. 1

Many types of halogenated hydrocarbons are used in various degreasing operations. Profiles 4-01-002A through F characterize many of these solvent emissions (Ref. 2,3).

Profile Basis[2,3]

Profiles 4-01-002A through F are based on an engineering inspection of the degreasing solvent formulations. The VOC's being emitted are a direct function of the degreasing solvent's formulation.

Data Qualification

Reference 1 should be consulted for additional information on the development and limitations when using the above mentioned emission factors.

Profiles 4-01-002A through F may be used to characterize the VOC emissions from various degreasing operations. Profile selection should be based on the degreasing solvent formulation specified for each profile.

DECEMBER 14, 1978 TABLE 4-01-002A POINT SOURCE EVAPORATION, CLEANING SOLVENT
DEGREASING, TRICHLOROETHANE
DATA CONFIDENCE LEVEL: II

CONTROL DEVICE: NONE
PROCESS MODIFICATION: NONE
KVB PROFILE KEY 0089

LINE NO.	SAROAD CODE	CHEMICAL NAME	MOLECULAR WEIGHT	PERCENT WEIGHT	PERCENT VOLUME	CHEMICAL CLASSIFICATION
1	43820	1,1,2-TRICHLOROETHANE	131.66	100.00	100.00	7 NON-REACTIVE
		TOTAL		100.00	100.00	
	0	COMPOUNDS OF CLASSIFICATION 1	.00	.00	.00	
	0	COMPOUNDS OF CLASSIFICATION 2	.00	.00	.00	
	0	COMPOUNDS OF CLASSIFICATION 3	.00	.00	.00	
	0	COMPOUNDS OF CLASSIFICATION 4	.00	.00	.00	
	0	COMPOUNDS OF CLASSIFICATION 5	.00	.00	.00	
	0	COMPOUNDS OF CLASSIFICATION 6	.00	.00	.00	
	1	COMPOUNDS OF CLASSIFICATION 7	131.66	100.00	100.00	
	1	COMPOUND COMPOSITE	131.66	100.00	100.00	

NOTES: A. METHOD: CALCULATIONS FROM COMPOSITE SURVEY DATA INSPECTION OF SOLVENT FORMULATION
B. REFERENCES: ENGINEERING JUDGEMENT
C. APPLICABLE SCC CATEGORIES: 4-01-002-02

DECEMBER 14, 1978 TABLE 4-01-002B POINT SOURCE EVAPORATION, CLEANING SOLVENT DEGREASING, DICHLOROMETHANE
DATA CONFIDENCE LEVEL: II

CONTROL DEVICE: NONE
PROCESS MODIFICATION: NONE
KVB PROFILE KEY 0275

LINE NO.	SAROAD CODE	CHEMICAL NAME	MOLECULAR WEIGHT	PERCENT WEIGHT	PERCENT VOLUME	CHEMICAL CLASSIFICATION
1	43802	DICHLOROMETHANE	84.94	100.00	100.00	5 MISCELLANEOUS
		TOTAL		100.00	100.00	
	0	COMPOUNDS OF CLASSIFICATION 1	.00	.00	.00	
	0	COMPOUNDS OF CLASSIFICATION 2	.00	.00	.00	
	0	COMPOUNDS OF CLASSIFICATION 3	.00	.00	.00	
	0	COMPOUNDS OF CLASSIFICATION 4	.00	.00	.00	
	1	COMPOUNDS OF CLASSIFICATION 5	84.94	100.00	100.00	
	0	COMPOUNDS OF CLASSIFICATION 6	.00	.00	.00	
	0	COMPOUNDS OF CLASSIFICATION 7	.00	.00	.00	
	1	COMPOUND COMPOSITE	84.94	100.00	100.00	

NOTES: A. METHOD: CALCULATIONS FROM COMPOSITE SURVEY DATA INSPECTION OF SOLVENT FORMULATION
B. REFERENCES: ENGINEERING JUDGEMENT
C. APPLICABLE SCC CATEGORIES: 4-01-002-04

DECEMBER 14, 1978 TABLE 4-01-002C POINT SOURCE EVAPORATION, CLEANING SOLVENT DEGREASING, TRICHLOROETHYLENE
DATA CONFIDENCE LEVEL: II

CONTROL DEVICE: NONE
PROCESS MODIFICATION: NONE
KVB PROFILE KEY 0271

LINE NO.	SAROAD CODE	CHEMICAL NAME	MOLECULAR WEIGHT	PERCENT WEIGHT	PERCENT VOLUME	CHEMICAL CLASSIFICATION
1	43824	TRICHLOROETHYLENE	131.40	100.00	100.00	5 MISCELLANEOUS
		TOTAL		100.00	100.00	
	0	COMPOUNDS OF CLASSIFICATION 1	.00	.00	.00	
	0	COMPOUNDS OF CLASSIFICATION 2	.00	.00	.00	
	0	COMPOUNDS OF CLASSIFICATION 3	.00	.00	.00	
	0	COMPOUNDS OF CLASSIFICATION 4	.00	.00	.00	
	1	COMPOUNDS OF CLASSIFICATION 5	131.40	100.00	100.00	
	0	COMPOUNDS OF CLASSIFICATION 6	.00	.00	.00	
	0	COMPOUNDS OF CLASSIFICATION 7	.00	.00	.00	
	1	COMPOUND COMPOSITE	131.40	100.00	100.00	

NOTES: A. METHOD: CALCULATIONS FROM COMPOSITE SURVEY DATA INSPECTION OF SOLVENT FORMULATION
B. REFERENCES: ENGINEERING JUDGEMENT
C. APPLICABLE SCC CATEGORIES: 4-01-002-05

DECEMBER 14, 1978 TABLE 4-01-002D POINT SOURCE EVAPORATION, CLEANING SOLVENT DEGREASING, TOLUENE
DATA CONFIDENCE LEVEL: II

CONTROL DEVICE: NONE
PROCESS MODIFICATION: NONE
KVB PROFILE KEY 0090

LINE NO.	SAROAD CODE	CHEMICAL NAME	MOLECULAR WEIGHT	PERCENT WEIGHT	PERCENT VOLUME	CHEMICAL CLASSIFICATION
1	45202	TOLUENE	92.13	100.00	100.00	3 AROMATIC
		TOTAL		100.00	100.00	
	0	COMPOUNDS OF CLASSIFICATION 1	.00	.00	.00	
	0	COMPOUNDS OF CLASSIFICATION 2	.00	.00	.00	
	1	COMPOUNDS OF CLASSIFICATION 3	92.13	100.00	100.00	
	0	COMPOUNDS OF CLASSIFICATION 4	.00	.00	.00	
	0	COMPOUNDS OF CLASSIFICATION 5	.00	.00	.00	
	0	COMPOUNDS OF CLASSIFICATION 6	.00	.00	.00	
	0	COMPOUNDS OF CLASSIFICATION 7	.00	.00	.00	
	1	COMPOUND COMPOSITE	92.13	100.00	100.00	

NOTES: A. METHOD: CALCULATIONS FROM COMPOSITE SURVEY DATA INSPECTION OF SOLVENT FORMULATION
B. REFERENCES: ENGINEERING JUDGEMENT
C. APPLICABLE SCC CATEGORIES: 4-01-002-06 (REFER ALSO TO SUMMARY INDEX)

DECEMBER 14, 1978 TABLE 4-01-002E POINT SOURCE EVAPORATION, CLEANING SOLVENT DEGREASING, TRICHLOROFLUOROMETHANE (FREON 11)
DATA CONFIDENCE LEVEL: II

CONTROL DEVICE: NONE
PROCESS MODIFICATION: NONE
KVB PROFILE KEY 0088

LINE NO.	SAROAD CODE	CHEMICAL NAME	MOLECULAR WEIGHT	PERCENT WEIGHT	PERCENT VOLUME	CHEMICAL CLASSIFICATION
1	43811	TRICHLOROFLUOROMETHANE	137.37	100.00	100.00	5 MISCELLANEOUS
		TOTAL		100.00	100.00	
	0	COMPOUNDS OF CLASSIFICATION 1	.00	.00	.00	
	0	COMPOUNDS OF CLASSIFICATION 2	.00	.00	.00	
	0	COMPOUNDS OF CLASSIFICATION 3	.00	.00	.00	
	0	COMPOUNDS OF CLASSIFICATION 4	.00	.00	.00	
	1	COMPOUNDS OF CLASSIFICATION 5	137.37	100.00	100.00	
	0	COMPOUNDS OF CLASSIFICATION 6	.00	.00	.00	
	0	COMPOUNDS OF CLASSIFICATION 7	.00	.00	.00	
	1	COMPOUND COMPOSITE	137.37	100.00	100.00	

NOTES: A. METHOD: CALCULATIONS FROM COMPOSITE SURVEY DATA INSPECTION OF SOLVENT FORMULATION
B. REFERENCES: ENGINEERING JUDGEMENT
C. APPLICABLE SCC CATEGORIES: 4-01-002-99

DECEMBER 14, 1978 TABLE 4-01-002F POINT SOURCE EVAPORAION, SURFACE COATING
DEGREASING, TRICHLOROTRIFLUOROETHANE (FREON 113)
DATA CONFIDENCE LEVEL: II

CONTROL DEVICE: NONE
PROCESS MODIFICATION: NONE
KVB PROFILE KEY 0277

LINE NO.	SAROAD CODE	CHEMICAL NAME	MOLECULAR WEIGHT	PERCENT WEIGHT	PERCENT VOLUME	CHEMICAL CLASSIFICATION
1	43821	TRICHLOROTRIFLUOROETHANE	187.38	100.00	100.00	7 NON-REACTIVE
		TOTAL		100.00	100.00	
	0	COMPOUNDS OF CLASSIFICATION 1	.00	.00	.00	
	0	COMPOUNDS OF CLASSIFICATION 2	.00	.00	.00	
	0	COMPOUNDS OF CLASSIFICATION 3	.00	.00	.00	
	0	COMPOUNDS OF CLASSIFICATION 4	.00	.00	.00	
	0	COMPOUNDS OF CLASSIFICATION 5	.00	.00	.00	
	0	COMPOUNDS OF CLASSIFICATION 6	.00	.00	.00	
	1	COMPOUNDS OF CLASSIFICATION 7	187.38	100.00	100.00	
	1	COMPOUND COMPOSITE	187.38	100.00	100.00	

NOTES: A. METHOD: CALCULATIONS FROM COMPOSITE SURVEY DATA INSPECTION OF SOLVENT FORMULATION
B. REFERENCES: ENGINEERING JUDGEMENT
C. APPLICABLE SCC CATEGORIES: 4-01-002-99

REFERENCES

1. Formica, P. N., "Controlled and Uncontrolled Emission Rates and Applicable Limitations for Eighty Processes," prepared for EPA Office of Air Quality Planning and Standards, Research Triangle Park, NC, EPA-340/1-78-004, April 1978.

2. Sonnichsen, T. W., KVB Engineer.

3. Taback, H. J., et al., "Control of Hydrocarbon Emissions from Stationary Sources in the California South Coast Air Basin," Vol I and II, KVB, Inc., Tustin, CA, June 1978.

4-02 POINT SOURCE EVAPORATIONS, SURFACE COATINGS

4-02-001 PAINTS
003 VARNISH/SHELLAC
004 LACQUER
005 ENAMEL
006 PRIMER
007 ADHESIVE
999 WAX, CITRUS COATING

Process Description[1,2]

Surface coating operations primarily involve the application of paint, varnish/shellac, lacquer, enamel, or paint primer for surface decoration and/or protection before being marketed. Adhesives as the name implies involve the application of a bonding agent for the purpose of adhering materials together. Coating waxes are applied (sprayed) to various citrus fruits to retard shrivelling, weight loss, and spoilage. A number of basic industrial coating operations are utilized for this purpose, including spraying, flowcoating, roller coating, dipping and electro-coating. There are variations and combinations of these operations, each designed for a special task. The coatings applied in these operations vary widely as to composition and physical properties. A brief discussion of each method of application is presented below. For forther information, consult AP-40 (Ref. 1).

In order to accelerate the drying of the solvents used in the surface coatings, a drying or baking operation is usually an integral part of the basic coating process. This drying process is described in Section 4-02-008.

Spraying--In spraying operations, a coating from a supply tank is forced, usually by compressed air, through a "gun" which is used to direct the coating as a spray upon the article to be coated. Many spraying operations are conducted in a booth or enclosure vented by a fan to protect the health and safety of the spray gun operator by ensuring that explosive and toxic concentration levels of solvent vapors do not develop.

Flowcoating--In flowcoating operations, a coating is fed through overhead nozzles so as to flow in a steady stream over the article to be coated, which is suspended from a conveyor line. Excess paint drains from the article to a catch basin from which it is recirculated by a pump back to the flow nozzles. Impinging heated air jets aid in the removal of superfluous coating and solvent from the coated article prior to its entering an oven for baking.

Flowcoating is used on articles which cannot be dipped because of their buoyancy, such as fuel-oil tanks, gas cylinders, pressure bottles, etc.

Roller Coating--Roller coating machines are similar to printing presses in principle. The machines usually have three or more power-driven rollers. One roller runs partially immersed in the coating and transfers the coating to a second, parallel roller. The strip or sheet to be coated is run between the second and third roller and is coated by transfer of coating from the second roller. The quantity of coating applied to the sheet or strip is established by the distance between the rollers.

Dipping--Dip tanks are simple vessels which contain a working supply of coating material. They usually are equipped with a close-off lid and a drainage reservoir, which are activated in case of fire. The object to be coated is immersed in the coating material long enough to be coated completely and then removed from the tank. Provision is made to drain the excess coating from the object back to the tank, either by suspending the work over the tank or by using drain boards that return the paint to the dip tank.

Electro-coating--Electrocoating, a variation of the ordinary dip tank process of coating, is the electrodeposition of resinous materials on surfaces. This operation is accomplished in water solutions, suspensions, or dispersions. In the electrocoating process, the object being coated is the anode and the tank containing the dilute solution, suspension or dispersion of film-forming materials usually is the cathode.

Emissions[1]

Spraying--Paint Spray Booths, Citrus Coating Wax--The discharge from a paint spray booth consists of particulate matter and organic solvent vapors. The organic solvent vapors are from the organic solvent, diluent, or thinner which is used with the coating and they evaporate from coating suspended in the airstream, from the target of the spraying, or from the inside surfaces of the booth and its accessories. The choice of the spraying method, air atomization, electrostatic, or other, is a factor in determining the amount of overspray which is the amount of sprayed coating which misses the article being coated.

Solvent concentrations in spray booth effluents generally range from 100 to 200 ppm. Solvent emissions from the spray booth stacks vary widely with extent of operation, from less than 1 to over 3,000 pounds per day.

VOC emission rates can be estimated based on the fact that although organic solvents have different evaporation rates, VOC emissions by flash-off can be estimated at various times during the spraying operation from the specific composite chemical composition. Details of this method are contained in AP-40 (Ref. 1).

Flowcoating, Roller Coating, Dipping and Electrocoating--Air pollutants from flowcoating, roller coating, dipping and electrocoating exist only in the form of organic solvent vapors since no particulate matter is formed. Solvent emission rates from these operations may also be estimated by the methods mentioned in AP-40 for surface coating operations (Ref. 1).

VOC Specie Emissions, Surface Coatings--The VOC specie emissions per application method as previously mentioned, are derived from the organic solvent, diluent, or thinner used with the coating. Presented below is an itemized list of surface coating profiles and their respective surface coating applications:

- Profile 4-02-001 A through D: Paints
- Profile 4-02-003 A through E: Varnish/Shellac
- Profile 4-02-004 A through F: Lacquer
- Profile 4-02-005 A through E: Enamel
- Profile 4-02-006 A through K: Primer
- Profile 4-02-007 A through E: Adhesive
- Profile 4-02-999 A through C: Citrus Coating Wax

Controls[1,2,3]

Organic solvents used in coatings and thinners are not controllable by filters, baffles, or water curtains. Solvent vapors can be controlled or recovered by the application of condensation, compression, absorption, adsorption, or combustion principles, when necessary for either economic or regulatory requirements.

Control efficiencies of 90% or greater are possible by adsorption using activated carbon, provided particulates are removed from the contaminated airstream by filtration before the airstream enters the carbon bed. Incineration is necessitated when an organic vapor is determined to be photochemically reactive and solvent recovery is not desired.

Process Modification

Appropriate substitutes for organic solvent-borne coatings exist in the increasingly popular water-borne coatings. Generally known as water-based paints or latexes, they have lower organic solvent content than the high organic solvent coatings. In the case of citrus wax coatings, one manufacturer reported that by increasing the solids content of the coating solvent a reduction in total organic emissions was achieved.

Profile Basis[3]

A majority of the above mentioned profiles are based on an engineering evaluation of questionnaires sent out to respective surface coaters in the Los Angeles area. Those based on test data involved the use of gas collecting bottles plus NIOSH type charcoal tubes. The particular method employed in developing the surface coating profile is so stated in the reference information at the bottom of each profile.

Data Qualification

AP-40 should be consulted for the application and limitations involved when evaluating emission factors for surface coating operations. The above mentioned profiles may be used to characterize the VOC emissions from the specified surface coatings as identified on each profile data table.

DECEMBER 14, 1978 TABLE 4-02-001A POINT SOURCE EVAPORATION, SURFACE COATING
PAINT, POLYMERIC (HOT AIR DRIED)
DATA CONFIDENCE LEVEL: III

CONTROL DEVICE: NONE
PROCESS MODIFICATION: NONE
KVB PROFILE KEY 0125

LINE NO.	SAROAD CODE	CHEMICAL NAME	MOLECULAR WEIGHT	PERCENT WEIGHT	PERCENT VOLUME	CHEMICAL CLASSIFICATION
1	45102	ISOMERS OF XYLENE	106.16	22.30	18.07	3 AROMATIC
2	45202	TOLUENE	92.13	55.10	51.46	3 AROMATIC
3	43551	ACETONE	58.08	12.20	18.07	4 CARBONYL
4	43552	METHYL ETHYL KETONE	72.10	10.40	12.39	4 CARBONYL
		TOTAL		100.00	99.99	
	0	COMPOUNDS OF CLASSIFICATION 1	.00	.00	.00	
	0	COMPOUNDS OF CLASSIFICATION 2	.00	.00	.00	
	2	COMPOUNDS OF CLASSIFICATION 3	95.78	77.40	69.53	
	2	COMPOUNDS OF CLASSIFICATION 4	63.78	22.60	30.46	
	0	COMPOUNDS OF CLASSIFICATION 5	.00	.00	.00	
	0	COMPOUNDS OF CLASSIFICATION 6	.00	.00	.00	
	0	COMPOUNDS OF CLASSIFICATION 7	.00	.00	.00	
	4	COMPOUND COMPOSITE	86.03	100.00	99.99	

NOTES: A. METHOD: CALCULATIONS FROM COMPOSITE SURVEY DATA ENGINEERING EVALUATION OF QUESTIONNAIRE DATA
B. REFERENCES: PAPERBOARD MANUFACTURER
C. APPLICABLE SCC CATEGORIES: 4-02-001-01

DECEMBER 14, 1978 TABLE 4-02-001B POINT SOURCE EVAPORATION, SURFACE COATING
PAINT SOLVENT, ACETONE
DATA CONFIDENCE LEVEL: II

CONTROL DEVICE: NONE
PROCESS MODIFICATION: NONE
KVB PROFILE KEY 0219

LINE NO.	SAROAD CODE	CHEMICAL NAME	MOLECULAR WEIGHT	PERCENT WEIGHT	PERCENT VOLUME	CHEMICAL CLASSIFICATION
1	43551	ACETONE	58.08	100.00	100.00	4 CARBONYL
		TOTAL		100.00	100.00	
	0	COMPOUNDS OF CLASSIFICATION 1	.00	.00	.00	
	0	COMPOUNDS OF CLASSIFICATION 2	.00	.00	.00	
	0	COMPOUNDS OF CLASSIFICATION 3	.00	.00	.00	
	1	COMPOUNDS OF CLASSIFICATION 4	58.08	100.00	100.00	
	0	COMPOUNDS OF CLASSIFICATION 5	.00	.00	.00	
	0	COMPOUNDS OF CLASSIFICATION 6	.00	.00	.00	
	0	COMPOUNDS OF CLASSIFICATION 7	.00	00	.00	
	1	COMPOUND COMPOSITE	58.08	100.00	100.00	

NOTES: A. METHOD: CALCULATIONS FROM COMPOSITE SURVEY DATA INSPECTION OF SOLVENT INFORMATION
B. REFERENCES: ENGINEERING JUDGEMENT
C. APPLICABLE SCC CATEGORIES: 4-02-001-02 (REFER ALSO TO SUMMARY INDEX)

DECEMBER 14, 1978 TABLE 4-02-001C POINT SOURCE EVAPORATION, SURFACE COATING
PAINT SOLVENT, ETHYL ACETATE
DATA CONFIDENCE LEVEL. II

CONTROL DEVICE: NONE
PROCESS MODIFICATION: NONE
KVB PROFILE KEY 0220

LINE NO.	SAROAD CODE	CHEMICAL NAME	MOLECULAR WEIGHT	PERCENT WEIGHT	PERCENT VOLUME	CHEMICAL CLASSIFICATION
1	43433	ETHYL ACETATE	88.10	100.00	100.00	5 MISCELLANEOUS
		TOTAL		100.00	100.00	
	0	COMPOUNDS OF CLASSIFICATION 1	.00	.00	.00	
	0	COMPOUNDS OF CLASSIFICATION 2	.00	.00	.00	
	0	COMPOUNDS OF CLASSIFICATION 3	.00	.00	.00	
	0	COMPOUNDS OF CLASSIFICATION 4	.00	.00	.00	
	1	COMPOUNDS OF CLASSIFICATION 5	88.10	100.00	100.00	
	0	COMPOUNDS OF CLASSIFICATION 6	.00	.00	.00	
	0	COMPOUNDS OF CLASSIFICATION 7	.00	.00	.00	
	1	COMPOUND COMPOSITE	88.10	100.00	100.00	

NOTES: A. METHOD: CALCULATIONS FROM COMPOSITE SURVEY DATA INSPECTION OF SOLVENT FORMULATION
B. REFERENCES: ENGINEERING JUDGEMENT
C. APPLICABLE SCC CATEGORIES: 4-02-001-03 (REFER ALSO TO SUMMARY INDEX)

DECEMBER 14, 1978 TABLE 4-02-001D POINT SOURCE EVAPORATION, SURFACE COATING
PAINT SOLVENT, METHYL ETHYL KETONE
DATA CONFIDENCE LEVEL: II

CONTROL DEVICE: NONE
PROCESS MODIFICATION: NONE
KVB PROFILE KEY 0221

LINE NO.	SAROAD CODE	CHEMICAL NAME	MOLECULAR WEIGHT	PERCENT WEIGHT	PERCENT VOLUME	CHEMICAL CLASSIFICATION
1	43552	METHYL ETHYL KETONE	72.10	100.00	100.00	4 CARBONYL
		TOTAL		100.00	100.00	
	0	COMPOUNDS OF CLASSIFICATION 1	.00	.00	.00	
	0	COMPOUNDS OF CLASSIFICATION 2	.00	.00	.00	
	0	COMPOUNDS OF CLASSIFICATION 3	.00	.00	.00	
	1	COMPOUNDS OF CLASSIFICATION 4	72.10	100.00	100.00	
	0	COMPOUNDS OF CLASSIFICATION 5	.00	.00	.00	
	0	COMPOUNDS OF CLASSIFICATION 6	.00	.00	.00	
	0	COMPOUNDS OF CLASSIFICATION 7	.00	.00	.00	
	1	COMPOUND COMPOSITE	72.10	100.00	100.00	

NOTES: A. METHOD: CALCULATIONS FROM COMPOSITE SURVEY DATA INSPECTION OF SOLVENT FORMULATION
B. REFERENCES: ENGINEERING JUDGEMENT
C. APPLICABLE SCC CATEGORIES: 4-02-001-04 (REFER ALSO TO SUMMARY INDEX)

DECEMBER 14, 1978 TABLE 4-02-003A POINT SOURCE EVAPORATION, SURFACE COATING
VARNISH/SHELLAC, GENERAL
DATA CONFIDENCE LEVEL: IV

CONTROL DEVICE: NONE
PROCESS MODIFICATION: NONE
KVB PROFILE KEY 0127

LINE NO.	SAROAD CODE	CHEMICAL NAME	MOLECULAR WEIGHT	PERCENT WEIGHT	PERCENT VOLUME	CHEMICAL CLASSIFICATION
1	43551	ACETONE	58.08	38.70	45.68	4 CARBONYL
2	43552	METHYL ETHYL KETONE	72.10	41.60	39.57	4 CARBONYL
3	43560	METHYL ISOBUTYL KETONE	100.16	16.70	11.45	4 CARBONYL
4	43367	GLYCOL ETHER	62.07	3.00	3.29	5 MISCELLANEOUS
		TOTAL		100.00	99.99	
	0	COMPOUNDS OF CLASSIFICATION 1	.00	.00	.00	
	0	COMPOUNDS OF CLASSIFICATION 2	.00	00	.00	
	0	COMPOUNDS OF CLASSIFICATION 3	.00	.00	.00	
	3	COMPOUNDS OF CLASSIFICATION 4	68.80	97.00	96.70	
	1	COMPOUNDS OF CLASSIFICATION 5	62.07	3.00	3.29	
	0	COMPOUNDS OF CLASSIFICATION 6	.00	.00	.00	
	0	COMPOUNDS OF CLASSIFICATION 7	.00	.00	.00	
	4	COMPOUND COMPOSITE	68.58	100.00	99.99	

NOTES: A. METHOD: CALCULATIONS FROM COMPOSITE SURVEY DATA ENGINEERING EVALUATION OF QUESTIONNAIRE DATA
B. REFERENCES: LITERATURE TEST DATA (REF. 3)
C. APPLICABLE SCC CATEGORIES: 4-02-003-01

DECEMBER 14, 1978 TABLE 4-02-003B POINT SOURCE EVAPORATION, SURFACE COATING
VARNISH/SHELLAC, VARNISH RESIN
DATA CONFIDENCE LEVEL: IV

CONTROL DEVICE: NONE
PROCESS MODIFICATION: NONE
KVB PROFILE KEY 0132

LINE NO.	SAROAD CODE	CHEMICAL NAME	MOLECULAR WEIGHT	PERCENT WEIGHT	PERCENT VOLUME	CHEMICAL CLASSIFICATION
1	43551	ACETONE	58.08	40.00	46.12	4 CARBONYL
2	43310	METHYL CELLOSOLVE	76.11	30.00	26.37	5 MISCELLANEOUS
3	43450	DIMETHYLFORMAMIDE	73.09	30.00	27.51	5 MISCELLANEOUS
		TOTAL		100.00	100.00	
	0	COMPOUNDS OF CLASSIFICATION 1	.00	.00	.00	
	0	COMPOUNDS OF CLASSIFICATION 2	.00	.00	.00	
	0	COMPOUNDS OF CLASSIFICATION 3	.00	.00	.00	
	1	COMPOUNDS OF CLASSIFICATION 4	58.08	40.00	46.12	
	2	COMPOUNDS OF CLASSIFICATION 5	74.57	60.00	53.88	
	0	COMPOUNDS OF CLASSIFICATION 6	.00	.00	.00	
	0	COMPOUNDS OF CLASSIFICATION 7	.00	.00	.00	
	3	COMPOUND COMPOSITE	66.96	100.00	100.00	

NOTES: A. METHOD: CALCULATIONS FROM COMPOSITE SURVEY DATA ENGINEERING EVALUATION OF QUESTIONNAIRE DATA
B. REFERENCES: PRINTED CIRCUIT BOARD MANUFACTURER
C. APPLICABLE SCC CATEGORIES: 4-02-003-01

DECEMBER 14, 1978 TABLE 4-02-003C POINT SOURCE EVAPORATION, SURFACE COATING
VARNISH/SHELLAC, LXH-221 AIR CONVERTING VARNISH
DATA CONFIDENCE LEVEL: III

CONTROL DEVICE: NONE
PROCESS MODIFICATION: NONE
KVB PROFILE KEY 0278

LINE NO.	SAROAD CODE	CHEMICAL NAME	MOLECULAR WEIGHT	PERCENT WEIGHT	PERCENT VOLUME	CHEMICAL CLASSIFICATION	
1	43233	N-OCTANE	114.23	1.80	1.48	1	PARAFFIN
2	45102	ISOMERS OF XYLENE	106.16	2.30	2.03	3	AROMATIC
3	45202	TOLUENE	92.13	35.50	35.58	3	AROMATIC
4	43305	N-BUTYL ALCOHOL	74.12	21.00	26.16	5	MISCELLANEOUS
5	43435	N-BUTYL ACETATE	116.16	3.20	2.59	5	MISCELLANEOUS
6	43444	ISOPROPYL ACETATE	104.00	36.20	32.16	5	MISCELLANEOUS
		TOTAL		100.00	100.00		
	1	COMPOUNDS OF CLASSIFICATION 1	114.23	1.80	1.48		
	0	COMPOUNDS OF CLASSIFICATION 2	.00	.00	.00		
	2	COMPOUNDS OF CLASSIFICATION 3	92.89	37.80	37.61		
	0	COMPOUNDS OF CLASSIFICATION 4	.00	.00	.00		
	3	COMPOUNDS OF CLASSIFICATION 5	91.68	60.40	60.91		
	0	COMPOUNDS OF CLASSIFICATION 6	.00	.00	.00		
	0	COMPOUNDS OF CLASSIFICATION 7	.00	.00	.00		
	6	COMPOUND COMPOSITE	92.47	100.00	100.00		

NOTES: A. METHOD: CALCULATIONS FROM COMPOSITE SURVEY DATA ENGINEERING EVALUATION OF QUESTIONNAIRE DATA
B. REFERENCES: WOOD FURNITURE MANUFACTURER
C. APPLICABLE SCC CATEGORIES: 4-02-003-01

DECEMBER 14, 1978 TABLE 4-02-003D POINT SOURCE EVAPORATION, SURFACE COATING, COMPOSITE VARNISH/SHELLAC, A. BROWN CO., BROLITE, MIL-V-173B, TT-V-109B
DATA CONFIDENCE LEVEL: IV

CONTROL DEVICE: NONE
PROCESS MODIFICATION: NONE
KVB PROFILE KEY 0133

LINE NO.	SAROAD CODE	CHEMICAL NAME	MOLECULAR WEIGHT	PERCENT WEIGHT	PERCENT VOLUME	CHEMICAL CLASSIFICATION
1	45202	TOLUENE	92.13	20.00	23.33	3 AROMATIC
2	43433	ETHYL ACETATE	88.10	6.30	7.74	5 MISCELLANEOUS
3	43435	N-BUTYL ACETATE	116.16	67.60	62.58	5 MISCELLANEOUS
4	43444	ISOPROPYL ACETATE	104.00	6.10	6.34	5 MISCELLANEOUS
		TOTAL		100.00	99.99	
	0	COMPOUNDS OF CLASSIFICATION 1	.00	.00	.00	
	0	COMPOUNDS OF CLASSIFICATION 2	.00	.00	.00	
	1	COMPOUNDS OF CLASSIFICATION 3	92.13	20.00	23.33	
	0	COMPOUNDS OF CLASSIFICATION 4	.00	.00	.00	
	3	COMPOUNDS OF CLASSIFICATION 5	112.32	80.00	76.66	
	0	COMPOUNDS OF CLASSIFICATION 6	.00	.00	.00	
	0	COMPOUNDS OF CLASSIFICATION 7	.00	.00	.00	
	4	COMPOUND COMPOSITE	107.61	100.00	99.99	

NOTES: A. METHOD: CALCULATIONS FROM COMPOSITE SURVEY DATA ENGINEERING EVALUATION OF QUESTIONNAIRE DATA
B. REFERENCES: AIRCRAFT MANUFACTURER
C. APPLICABLE SCC CATEGORIES: 4-02-003-01

DECEMBER 14, 1978 TABLE 4-02-003E POINT SOURCE EVAPORATION, SURFACE COATING
VARNISH/SHELLAC SOLVENT, XYLENE
DATA CONFIDENCE LEVEL: II

CONTROL DEVICE: NONE
PROCESS MODIFICATION: NONE
KVB PROFILE KEY 0223

LINE NO.	SAROAD CODE	CHEMICAL NAME	MOLECULAR WEIGHT	PERCENT WEIGHT	PERCENT VOLUME	CHEMICAL CLASSIFICATION
1	45102	ISOMERS OF XYLENE	106.16	100.00	100.00	3 AROMATIC
		TOTAL		100.00	100.00	
	0	COMPOUNDS OF CLASSIFICATION 1	.00	.00	.00	
	0	COMPOUNDS OF CLASSIFICATION 2	.00	.00	.00	
	1	COMPOUNDS OF CLASSIFICATION 3	106.16	100.00	100.00	
	0	COMPOUNDS OF CLASSIFICATION 4	.00	.00	.00	
	0	COMPOUNDS OF CLASSIFICATION 5	.00	.00	.00	
	0	COMPOUNDS OF CLASSIFICATION 6	.00	.00	.00	
	0	COMPOUNDS OF CLASSIFICATION 7	.00	.00	.00	
	1	COMPOUND COMPOSITE	106.16	100.00	100.00	

NOTES: A. METHOD: CALCULATIONS FROM COMPOSITE SURVEY DATA INSPECTION OF SOLVENT FORMULATION
B. REFERENCES: ENGINEERING JUDGMENT
C. APPLICABLE SCC CATEGORIES: 4-02-003-05, 4-02-009-24

DECEMBER 14, 1978 TABLE 4-02-004A POINT SOURCE EVAPORATION, SURFACE COATING
LACQUER, PAPERBOARD PRODUCTS AND CONTAINERS
DATA CONFIDENCE LEVEL: IV

CONTROL DEVICE: NONE
PROCESS MODIFICATION: NONE
KVB PROFILE KEY 0149

LINE NO.	SAROAD CODE	CHEMICAL NAME	MOLECULAR WEIGHT	PERCENT WEIGHT	PERCENT VOLUME	CHEMICAL CLASSIFICATION	
1	43118	MINERAL SPIRITS	114.00	21.40	17.03	1	PARAFFIN
2	45202	TOLUENE	92.13	9.40	9.24	3	AROMATIC
3	43552	METHYL ETHYL KETONE	72.10	14.20	17.84	4	CARBONYL
4	43311	CELLOSOLVE	90.12	26.60	26.72	5	MISCELLANEOUS
5	43433	ETHYL ACETATE	88.10	28.40	29.17	5	MISCELLANEOUS
		TOTAL		100.00	100.00		
	1	COMPOUNDS OF CLASSIFICATION 1	114.00	21.40	17.03		
	0	COMPOUNDS OF CLASSIFICATION 2	.00	.00	.00		
	1	COMPOUNDS OF CLASSIFICATION 3	92.13	9.40	9.24		
	1	COMPOUNDS OF CLASSIFICATION 4	72.10	14.20	17.84		
	2	COMPOUNDS OF CLASSIFICATION 5	89.07	55.00	55.89		
	0	COMPOUNDS OF CLASSIFICATION 6	.00	.00	.00		
	0	COMPOUNDS OF CLASSIFICATION 7	.00	.00	.00		
	5	COMPOUND COMPOSITE	90.57	100.00	100.00		

NOTES: A. METHOD: CALCULATIONS FROM COMPOSITE SURVEY DATA ENGINEERING EVALUATION OF QUESTIONNAIRE DATA
B. REFERENCES: PRESSURE SENSITIVE LABEL MANUFACTURER
C. APPLICABLE SCC CATEGORIES: 4-02-004-01,-99

DECEMBER 14, 1978 TABLE 4-02-004B POINT SOURCE EVAPORATION, SURFACE COATING
LACQUER, METAL FURNITURE
DATA CONFIDENCE LEVEL: IV

CONTROL DEVICE: NONE
PROCESS MODIFICATION: NONE
KVB PROFILE KEY 0148

LINE NO.	SAROAD CODE	CHEMICAL NAME	MOLECULAR WEIGHT	PERCENT WEIGHT	PERCENT VOLUME	CHEMICAL CLASSIFICATION
1	43118	MINERAL SPIRITS	114.00	25.00	17.82	1 PARAFFIN
2	45102	ISOMERS OF XYLENE	106.16	7.00	5.37	3 AROMATIC
3	45202	TOLUENE	92.13	10.00	8.87	3 AROMATIC
4	43264	CYCLOHEXANONE	98.15	8.00	6.67	4 CARBONYL
5	43551	ACETONE	58.08	13.00	18.23	4 CARBONYL
6	43552	METHYL ETHYL KETONE	72.10	18.00	20.34	4 CARBONYL
7	43304	ISOPROPYL ALCOHOL	60.09	15.00	20.34	5 MISCELLANEOUS
8	43445	METHYL AMYL ACETATE	140.00	4.00	2.36	5 MISCELLANEOUS
		TOTAL		100.00	100.00	
	1	COMPOUNDS OF CLASSIFICATION 1	114.00	25.00	17.82	
	0	COMPOUNDS OF CLASSIFICATION 2	.00	.00	.00	
	2	COMPOUNDS OF CLASSIFICATION 3	97.42	17.00	14.24	
	3	COMPOUNDS OF CLASSIFICATION 4	70.29	39.00	45.24	
	2	COMPOUNDS OF CLASSIFICATION 5	68.40	19.00	22.70	
	0	COMPOUNDS OF CLASSIFICATION 6	.00	.00	.00	
	0	COMPOUNDS OF CLASSIFICATION 7	.00	.00	.00	
	8	COMPOUND COMPOSITE	81.51	100.00	100.00	

NOTES: A. METHOD: CALCULATIONS FROM COMPOSITE SURVEY DATA ENGINEERING EVALUATION OF QUESTIONNAIRE DATA
B. REFERENCES: METAL FURNITURE MANUFACTURER
C. APPLICABLE SCC CATEGORIES: 4-02-004-01,-99

DECEMBER 14, 1978 TABLE 4-02-004C POINT SOURCE EVAPORATION, SURFACE COATING
LACQUER, LXB-472-E SEMIGLOSS TOP COAT
DATA CONFIDENCE LEVEL: III

CONTROL DEVICE: NONE
PROCESS MODIFICATION: NONE
KVB PROFILE KEY 0147

LINE NO.	SAROAD CODE	CHEMICAL NAME	MOLECULAR WEIGHT	PERCENT WEIGHT	PERCENT VOLUME	CHEMICAL CLASSIFICATION
1	43118	MINERAL SPIRITS	114.00	6.40	4.99	1 PARAFFIN
2	43233	N-OCTANE	114.23	4.60	3.57	1 PARAFFIN
3	43248	CYCLOHEXANE	84.16	6.40	6.77	1 PARAFFIN
4	45202	TOLUENE	92.13	13.90	13.46	3 AROMATIC
5	43552	METHYL ETHYL KETONE	72.10	16.60	20.50	4 CARBONYL
6	43304	ISOPROPYL ALCOHOL	60.09	11.70	17.38	5 MISCELLANEOUS
7	43305	N-BUTYL ALCOHOL	74.12	4.00	4.81	5 MISCELLANEOUS
8	43308	BUTYL CELLOSOLVE	102.00	5.60	4.90	5 MISCELLANEOUS
9	43435	N-BUTYL ACETATE	116.16	30.80	23.62	5 MISCELLANEOUS
		TOTAL		100.00	100.00	
	3	COMPOUNDS OF CLASSIFICATION 1	100.88	17.40	15.33	
	0	COMPOUNDS OF CLASSIFICATION 2	.00	.00	.00	
	1	COMPOUNDS OF CLASSIFICATION 3	92.13	13.90	13.46	
	1	COMPOUNDS OF CLASSIFICATION 4	72.10	16.60	20.50	
	4	COMPOUNDS OF CLASSIFICATION 5	91.59	52.10	50.71	
	0	COMPOUNDS OF CLASSIFICATION 6	.00	.00	.00	
	0	COMPOUNDS OF CLASSIFICATION 7	.00	.00	.00	
	9	COMPOUND COMPOSITE	89.09	100.00	100.00	

NOTES: A. METHOD: CALCULATIONS FROM COMPOSITE SURVEY DATA ENGINEERING EVALUATION OF QUESTIONNAIRE DATA
B. REFERENCES: WOOD FURNITURE MANUFACTURER
C. APPLICABLE SCC CATEGORIES: 4-02-004-01,-99

DECEMBER 14, 1978 TABLE 4-02-004D POINT SOURCE EVAPORATION, SURFACE COATING
LACQUER, AIRCRAFT COATING
DATA CONFIDENCE LEVEL: IV

CONTROL DEVICE: NONE
PROCESS MODIFICATION: NONE
KVB PROFILE KEY 0155

LINE NO.	SAROAD CODE	CHEMICAL NAME	MOLECULAR WEIGHT	PERCENT WEIGHT	PERCENT VOLUME	CHEMICAL CLASSIFICATION
1	43118	MINERAL SPIRITS	114.00	80.00	80.05	1 PARAFFIN
2	45101	NAPHTHA	114.00	20.00	19.95	3 AROMATIC
		TOTAL		100.00	100.00	
	1	COMPOUNDS OF CLASSIFICATION 1	114.00	80.00	80.05	
	0	COMPOUNDS OF CLASSIFICATION 2	.00	.00	.00	
	1	COMPOUNDS OF CLASSIFICATION 3	114.00	20.00	19.95	
	0	COMPOUNDS OF CLASSIFICATION 4	.00	.00	.00	
	0	COMPOUNDS OF CLASSIFICATION 5	.00	.00	.00	
	0	COMPOUNDS OF CLASSIFICATION 6	.00	.00	.00	
	0	COMPOUNDS OF CLASSIFICATION 7	.00	.00	.00	
	2	COMPOUND COMPOSITE	114.00	100.00	100.00	

NOTES: A. METHOD: CALCULATIONS FROM COMPOSITE SURVEY DATA ENGINEERING EVALUATION OF QUESTIONNAIRE DATA
B. REFERENCES: AIRCRAFT MANUFACTURER
C. APPLICABLE SCC CATEGORIES: 4-02-004-01,-99

DECEMBER 14, 1978 TABLE 4-02-004E POINT SOURCE EVAPORATION, SURFACE COATING
LACQUER, AIRCRAFT PARTS
DATA CONFIDENCE LEVEL: IV

CONTROL DEVICE: NONE
PROCESS MODIFICATION: NONE
KVB PROFILE KEY 0146

LINE NO.	SAROAD CODE	CHEMICAL NAME	MOLECULAR WEIGHT	PERCENT WEIGHT	PERCENT VOLUME	CHEMICAL CLASSIFICATION	
1	43118	MINERAL SPIRITS	114.00	10.70	7.76	1	PARAFFIN
2	45101	NAPHTHA	114.00	1.00	.74	3	AROMATIC
3	45102	ISOMERS OF XYLENE	106.16	4.80	3.71	3	AROMATIC
4	45202	TOLUENE	92.13	3.80	3.38	3	AROMATIC
5	43551	ACETONE	58.08	11.20	15.92	4	CARBONYL
6	43552	METHYL ETHYL KETONE	72.10	12.00	13.70	4	CARBONYL
7	43560	METHYL ISOBUTYL KETONE	100.16	4.60	3.80	4	CARBONYL
8	43301	METHYL ALCOHOL	32.04	1.60	4.13	5	MISCELLANEOUS
9	43302	ETHYL ALCOHOL	46.07	1.20	2.15	5	MISCELLANEOUS
10	43304	ISOPROPYL ALCOHOL	60.09	4.50	6.19	5	MISCELLANEOUS
11	43305	N-BUTYL ALCOHOL	74.12	6.50	7.26	5	MISCELLANEOUS
12	43367	GLYCOL ETHER	62.07	5.40	7.18	5	MISCELLANEOUS
13	43433	ETHYL ACETATE	88.10	2.60	2.48	5	MISCELLANEOUS
14	43435	N-BUTYL ACETATE	116.16	27.50	19.55	5	MISCELLANEOUS
15	43444	ISOPROPYL ACETATE	104.00	2.60	2.06	5	MISCELLANEOUS
		TOTAL		100.00	100.01		

1	COMPOUNDS OF CLASSIFICATION 1	114.00	10.70	7.76
0	COMPOUNDS OF CLASSIFICATION 2	.00	.00	.00
3	COMPOUNDS OF CLASSIFICATION 3	100.84	9.60	7.83
3	COMPOUNDS OF CLASSIFICATION 4	68.61	27.80	33.42
8	COMPOUNDS OF CLASSIFICATION 5	84.13	51.90	51.00
0	COMPOUNDS OF CLASSIFICATION 6	.00	.00	.00
0	COMPOUNDS OF CLASSIFICATION 7	.00	.00	.00
15	COMPOUND COMPOSITE	82.57	100.00	100.01

NOTES: A. METHOD: CALCULATIONS FROM COMPOSITE SURVEY DATA ENGINEERING EVALUATION OF LITERATURE DATA
B. REFERENCES: T.W. SONNICHSEN, KVB ENGINEER
C. APPLICABLE SCC CATEGORIES: 4-02-004-01, 4-02-006-99

DECEMBER 14, 1978 TABLE 4-02-004F POINT SOURCE EVAPORATION, SURFACE COATING
LACQUER, PLASTIC COATING
DATA CONFIDENCE LEVEL: III

CONTROL DEVICE: NONE
PROCESS MODIFICATION: NONE
KVB PROFILE KEY 0150

LINE NO.	SAROAD CODE	CHEMICAL NAME	MOLECULAR WEIGHT	PERCENT WEIGHT	PERCENT VOLUME	CHEMICAL CLASSIFICATION
1	45202	TOLUENE	92.13	20.40	16.31	3 AROMATIC
2	43551	ACETONE	58.08	18.70	23.76	4 CARBONYL
3	43305	N-BUTYL ALCOHOL	74.12	32.40	32.25	5 MISCELLANEOUS
4	43310	METHYL CELLOSOLVE	76.11	28.50	27.68	5 MISCELLANEOUS
		TOTAL		100.00	100.00	
	0	COMPOUNDS OF CLASSIFICATION 1	.00	.00	.00	
	0	COMPOUNDS OF CLASSIFICATION 2	.00	.00	.00	
	1	COMPOUNDS OF CLASSIFICATION 3	92.13	20.40	16.31	
	1	COMPOUNDS OF CLASSIFICATION 4	58.08	18.70	23.76	
	2	COMPOUNDS OF CLASSIFICATION 5	75.04	60.90	59.93	
	0	COMPOUNDS OF CLASSIFICATION 6	.00	.00	.00	
	0	COMPOUNDS OF CLASSIFICATION 7	.00	.00	.00	
	4	COMPOUND COMPOSITE	73.80	100.00	100.00	

NOTES:
A. METHOD: CALCULATIONS FROM COMPOSITE SURVEY DATA ENGINEERING EVALUATION OF QUESTIONNAIRE DATA
B. REFERENCES: PLASTIC MOLDING AND METALIZING MANUFACTURER
C. APPLICABLE SCC CATEGORIES: 4-02-004-01,-99

DECEMBER 14, 1978 TABLE 4-02-005A POINT SOURCE EVAPORATION, SURFACE COATING
ENAMEL, GENERAL COMPOSITE
DATA CONFIDENCE LEVEL: IV

CONTROL DEVICE: NONE
PROCESS MODIFICATION: NONE
KVB PROFILE KEY 0156

LINE NO.	SAROAD CODE	CHEMICAL NAME	MOLECULAR WEIGHT	PERCENT WEIGHT	PERCENT VOLUME	CHEMICAL CLASSIFICATION	
1	43118	MINERAL SPIRITS	114.00	67.60	57.57	1	PARAFFIN
2	45102	ISOMERS OF XYLENE	106.16	4.00	3.69	3	AROMATIC
3	45202	TOLUENE	92.13	3.20	3.40	3	AROMATIC
4	43551	ACETONE	58.08	6.30	10.58	4	CARBONYL
5	43552	METHYL ETHYL KETONE	72.10	6.80	9.13	4	CARBONYL
6	43560	METHYL ISOBUTYL KETONE	100.16	2.70	2.62	4	CARBONYL
7	43301	METHYL ALCOHOL	32.04	.70	2.14	5	MISCELLANEOUS
8	43302	ETHYL ALCOHOL	46.07	.50	1.07	5	MISCELLANEOUS
9	43304	ISOPROPYL ALCOHOL	60.09	1.90	3.11	5	MISCELLANEOUS
10	43305	N-BUTYL ALCOHOL	74.12	2.80	3.69	5	MISCELLANEOUS
11	43433	ETHYL ACETATE	88.10	.30	.29	5	MISCELLANEOUS
12	43435	N-BUTYL ACETATE	116.16	2.90	2.43	5	MISCELLANEOUS
13	43444	ISOPROPYL ACETATE	104.00	.30	.29	5	MISCELLANEOUS
		TOTAL		100.00	100.01		
	1	COMPOUNDS OF CLASSIFICATION 1	114.00	67.60	57.57		
	0	COMPOUNDS OF CLASSIFICATION 2	.00	.00	.00		
	2	COMPOUNDS OF CLASSIFICATION 3	99.43	7.20	7.09		
	3	COMPOUNDS OF CLASSIFICATION 4	68.75	15.80	22.33		
	7	COMPOUNDS OF CLASSIFICATION 5	70.37	9.40	13.02		
	0	COMPOUNDS OF CLASSIFICATION 6	.00	.00	.00		
	0	COMPOUNDS OF CLASSIFICATION 7	.00	.00	.00		
	13	COMPOUND COMPOSITE	97.18	100.00	100.01		

NOTES: A. METHOD: CALCULATIONS FROM COMPOSITE SURVEY DATA ENGINEERING EVALUATION OF LITERATURE DATA
B. REFERENCES: LITERATURE TEST DATA (REF. 3)
C. APPLICABLE SCC CATEGORIES: 4-02-005-01,-99

DECEMBER 14, 1978 TABLE 4-02-005B POINT SOURCE EVAPORATION, SURFACE COATING
ENAMEL, POLYESTER, MODIFIED ACRYLIC
DATA CONFIDENCE LEVEL: IV

CONTROL DEVICE: NONE
PROCESS MODIFICATION: NONE
KVB PROFILE KEY 0159

LINE NO.	SAROAD CODE	CHEMICAL NAME	MOLECULAR WEIGHT	PERCENT WEIGHT	PERCENT VOLUME	CHEMICAL CLASSIFICATION	
1	45101	NAPHTHA	114.00	12.40	10.06	3	AROMATIC
2	45202	TOLUENE	92.13	4.80	4.80	3	AROMATIC
3	43552	METHYL ETHYL KETONE	72.10	32.20	41.24	4	CARBONYL
4	43308	BUTYL CELLOSOLVE	102.00	34.30	31.00	5	MISCELLANEOUS
5	43446	ISOBUTYL ACETATE	116.16	16.30	12.92	5	MISCELLANEOUS
		TOTAL		100.00	100.02		
	0	COMPOUNDS OF CLASSIFICATION 1	.00	.00	.00		
	0	COMPOUNDS OF CLASSIFICATION 2	.00	.00	.00		
	2	COMPOUNDS OF CLASSIFICATION 3	106.94	17.20	14.86		
	1	COMPOUNDS OF CLASSIFICATION 4	72.10	32.20	41.24		
	2	COMPOUNDS OF CLASSIFICATION 5	106.17	50.60	43.92		
	0	COMPOUNDS OF CLASSIFICATION 6	.00	.00	.00		
	0	COMPOUNDS OF CLASSIFICATION 7	.00	.00	.00		
	5	COMPOUND COMPOSITE	92.23	100.00	100.02		

NOTES: A. METHOD: CALCULATIONS FROM COMPOSITE SURVEY DATA ENGINEERING EVALUATION OF INDUSTRY QUESTIONNAIRE DATA
B. REFERENCES: SHEETMETAL FABRICATOR
C. APPLICABLE SCC CATEGORIES: 4-02-005-01,-99

DECEMBER 14, 1978 TABLE 4-02-005C POINT SOURCE EVAPORATION, SURFACE COATING ENAMEL, COMPOSITE FOR WOOD FURNITURE

DATA CONFIDENCE LEVEL: IV

CONTROL DEVICE: NONE
PROCESS MODIFICATION: NONE
KVB PROFILE KEY 0157

LINE NO.	SAROAD CODE	CHEMICAL NAME	MOLECULAR WEIGHT	PERCENT WEIGHT	PERCENT VOLUME	CHEMICAL CLASSIFICATION	
1	43118	MINERAL SPIRITS	114.00	13.20	10.98	1	PARAFFIN
2	43233	N-OCTANE	114.23	5.30	4.36	1	PARAFFIN
3	43248	CYCLOHEXANE	84.16	13.20	14.87	1	PARAFFIN
4	45202	TOLUENE	92.13	12.30	12.69	3	AROMATIC
5	43552	METHYL ETHYL KETONE	72.10	24.70	32.48	4	CARBONYL
6	43435	N-BUTYL ACETATE	116.16	12.40	10.13	5	MISCELLANEOUS
7	43452	2-ETHOXYETHYL ACETATE	132.00	5.00	3.60	5	MISCELLANEOUS
8	43823	DICHLORODIFLUOROMETHANE	120.91	13.90	10.89	5	MISCELLANEOUS
		TOTAL		100.00	100.00		
	3	COMPOUNDS OF CLASSIFICATION 1	99.35	31.70	30.21		
	0	COMPOUNDS OF CLASSIFICATION 2	.00	.00	.00		
	1	COMPOUNDS OF CLASSIFICATION 3	92.13	12.30	12.69		
	1	COMPOUNDS OF CLASSIFICATION 4	72.10	24.70	32.48		
	3	COMPOUNDS OF CLASSIFICATION 5	120.58	31.30	24.62		
	0	COMPOUNDS OF CLASSIFICATION 6	.00	.00	.00		
	0	COMPOUNDS OF CLASSIFICATION 7	.00	.00	.00		
	8	COMPOUND COMPOSITE	94.81	100.00	100.00		

NOTES: A. METHOD: CALCULATIONS FROM COMPOSITE SURVEY DATA ENGINEERING EVALUATION OF QUESTIONNAIRE DATA
B. REFERENCES: WOOD FURNITURE MANUFACTURER
C. APPLICABLE SCC CATEGORIES: 4-02-005-01,-99

DECEMBER 14, 1978 TABLE 4-02-005D POINT SOURCE EVAPORATION, SURFACE COATING
ENAMEL, AIRCRAFT INDUSTRY
DATA CONFIDENCE LEVEL: III

CONTROL DEVICE: NONE
PROCESS MODIFICATION: NONE
KVB PROFILE KEY 0164

LINE NO.	SAROAD CODE	CHEMICAL NAME	MOLECULAR WEIGHT	PERCENT WEIGHT	PERCENT VOLUME	CHEMICAL CLASSIFICATION
1	43433	ETHYL ACETATE	88.10	7.90	10.11	5 MISCELLANEOUS
2	43435	N-BUTYL ACETATE	116.16	84.50	81.69	5 MISCELLANEOUS
3	43444	ISOPROPYL ACETATE	104.00	7.60	8.20	5 MISCELLANEOUS
		TOTAL		100.00	100.00	
	0	COMPOUNDS OF CLASSIFICATION 1	00	.00	.00	
	0	COMPOUNDS OF CLASSIFICATION 2	.00	00	.00	
	0	COMPOUNDS OF CLASSIFICATION 3	.00	00	.00	
	0	COMPOUNDS OF CLASSIFICATION 4	00	.00	.00	
	3	COMPOUNDS OF CLASSIFICATION 5	112.33	100.00	100.00	
	0	COMPOUNDS OF CLASSIFICATION 6	.00	.00	.00	
	0	COMPOUNDS OF CLASSIFICATION 7	.00	.00	.00	
	3	COMPOUND COMPOSITE	112.33	100.00	100.00	

NOTES: A. METHOD: CALCULATIONS FROM COMPOSITE SURVEY DATA ENGINEERING EVALUATION OF QUESTIONNAIRE DATA
B. REFERENCES: AIRCRAFT INDUSTRY
C. APPLICABLE SCC CATEGORIES: 4-02-005-01,-99

DECEMBER 14, 1978 TABLE 4-02-005E POINT SOURCE EVAPORATION, SURFACE COATING
ENAMEL, CELLOSOLVE ACETATE
DATA CONFIDENCE LEVEL: II

CONTROL DEVICE: NONE
PROCESS MODIFICATION: NONE
KVB PROFILE KEY 0222

LINE NO.	SAROAD CODE	CHEMICAL NAME	MOLECULAR WEIGHT	PERCENT WEIGHT	PERCENT VOLUME	CHEMICAL CLASSIFICATION
1	43452	2-ETHOXYETHYL ACETATE	132.00	100.00	100.00	5 MISCELLANEOUS
		TOTAL		100.00	100.00	
	0	COMPOUNDS OF CLASSIFICATION 1	.00	.00	.00	
	0	COMPOUNDS OF CLASSIFICATION 2	.00	.00	.00	
	0	COMPOUNDS OF CLASSIFICATION 3	.00	.00	.00	
	0	COMPOUNDS OF CLASSIFICATION 4	.00	00	.00	
	1	COMPOUNDS OF CLASSIFICATION 5	132.00	100.00	100.00	
	0	COMPOUNDS OF CLASSIFICATION 6	.00	.00	.00	
	0	COMPOUNDS OF CLASSIFICATION 7	.00	.00	.00	
	1	COMPOUND COMPOSITE	132.00	100.00	100.00	

NOTES: A. METHOD: CALCULATIONS FROM COMPOSITE SURVEY DATA INSPECTION OF SOLVENT FORMULATION
B. REFERENCES: ENGINEERING JUDGEMENT
C. APPLICABLE SCC CATEGORIES: 4-02-005-02, 4-02-009-07

DECEMBER 14, 1978 TABLE 4-02-006A POINT SOURCE EVAPORATION, SURFACE COATING
PRIMER, GENERAL
DATA CONFIDENCE LEVEL: IV

CONTROL DEVICE: NONE
PROCESS MODIFICATION: NONE
KVB PROFILE KEY 0134

LINE NO.	SAROAD CODE	CHEMICAL NAME	MOLECULAR WEIGHT	PERCENT WEIGHT	PERCENT VOLUME	CHEMICAL CLASSIFICATION
1	43118	MINERAL SPIRITS	114.00	41.00	31.28	1 PARAFFIN
2	45101	NAPHTHA	114.00	1.00	.78	3 AROMATIC
3	45102	ISOMERS OF XYLENE	106.16	4.90	4.00	3 AROMATIC
4	45202	TOLUENE	92.13	3.90	3.65	3 AROMATIC
5	43551	ACETONE	58.08	7.10	10.60	4 CARBONYL
6	43552	METHYL ETHYL KETONE	72.10	7.70	9.30	4 CARBONYL
7	43560	METHYL ISOBUTYL KETONE	100.16	3.10	2.69	4 CARBONYL
8	43301	METHYL ALCOHOL	32.04	1.00	2.69	5 MISCELLANEOUS
9	43302	ETHYL ALCOHOL	46.07	80	1.48	5 MISCELLANEOUS
10	43304	ISOPROPYL ALCOHOL	60.09	2.80	4.08	5 MISCELLANEOUS
11	43305	N-BUTYL ALCOHOL	74.12	4.00	4.69	5 MISCELLANEOUS
12	43367	GLYCOL ETHER	62.07	11.50	16.07	5 MISCELLANEOUS
13	43433	ETHYL ACETATE	88.10	.90	.87	5 MISCELLANEOUS
14	43435	N-BUTYL ACETATE	116.16	9.50	7.12	5 MISCELLANEOUS
15	43444	ISOPROPYL ACETATE	104.00	.80	.70	5 MISCELLANEOUS
		TOTAL		100.00	100.00	
	1	COMPOUNDS OF CLASSIFICATION 1	114.00	41.00	31.28	
	0	COMPOUNDS OF CLASSIFICATION 2	.00	.00	.00	
	3	COMPOUNDS OF CLASSIFICATION 3	100.81	9.80	8.43	
	3	COMPOUNDS OF CLASSIFICATION 4	68.86	17.90	22.59	
	8	COMPOUNDS OF CLASSIFICATION 5	72.18	31.30	37.70	
	0	COMPOUNDS OF CLASSIFICATION 6	.00	.00	.00	
	0	COMPOUNDS OF CLASSIFICATION 7	.00	.00	.00	
	15	COMPOUND COMPOSITE	86.93	100.00	100.00	

NOTES: A. METHOD: CALCULATIONS FROM COMPOSITE SURVEY DATA ENGINEERING EVALUATION OF LITERATURE DATA
B. REFERENCES: LITERATURE TEST DATA
C. APPLICABLE SCC CATEGORIES: 4-02-006-01,-99

DECEMBER 14, 1978 TABLE 4-02-006B POINT SOURCE EVAPORATION, SURFACE COATING PRIMER, PAPERBOARD PRODUCTS AND CONTAINERS
DATA CONFIDENCE LEVEL: IV

CONTROL DEVICE: NONE
PROCESS MODIFICATION: NONE
KVB PROFILE KEY 0137

LINE NO.	SAROAD CODE	CHEMICAL NAME	MOLECULAR WEIGHT	PERCENT WEIGHT	PERCENT VOLUME	CHEMICAL CLASSIFICATION
1	43231	N-HEXANE	86.17	62.70	57.37	1 PARAFFIN
2	45202	TOLUENE	92.13	5.20	4.41	3 AROMATIC
3	43551	ACETONE	58.08	8.40	11.43	4 CARBONYL
4	43119	LACTOL SPIRITS	114.00	8.00	5.52	5 MISCELLANEOUS
5	43301	METHYL ALCOHOL	32.04	4.70	11.58	5 MISCELLANEOUS
6	43311	CELLOSOLVE	90.12	5.60	4.89	5 MISCELLANEOUS
7	43433	ETHYL ACETATE	88.10	5.40	4.81	5 MISCELLANEOUS
		TOTAL		100.00	100.01	
	1	COMPOUNDS OF CLASSIFICATION 1	86.17	62.70	57.37	
	0	COMPOUNDS OF CLASSIFICATION 2	.00	.00	.00	
	1	COMPOUNDS OF CLASSIFICATION 3	92.13	5.20	4.41	
	1	COMPOUNDS OF CLASSIFICATION 4	58.08	8.40	11.43	
	4	COMPOUNDS OF CLASSIFICATION 5	69.58	23.70	26.80	
	0	COMPOUNDS OF CLASSIFICATION 6	.00	.00	.00	
	0	COMPOUNDS OF CLASSIFICATION 7	.00	.00	.00	
	7	COMPOUND COMPOSITE	78.78	100.00	100.01	

NOTES: A. METHOD: CALCULATIONS FROM COMPOSITE SURVEY DATA ENGINEERING EVALUATION OF QUESTIONNAIRE DATA
B. REFERENCES: PRESSURE SENSITIVE LABEL MANUFACTURER
C. APPLICABLE SCC CATEGORIES: 4-02-006-01

DECEMBER 14, 1978 TABLE 4-02-006C POINT SOURCE EVAPORATION, SURFACE COATING
PRIMER, METAL FURNITURE
DATA CONFIDENCE LEVEL: III

CONTROL DEVICE: NONE
PROCESS MODIFICATION: NONE
KVB PROFILE KEY 0136

LINE NO.	SAROAD CODE	CHEMICAL NAME	MOLECULAR WEIGHT	PERCENT WEIGHT	PERCENT VOLUME	CHEMICAL CLASSIFICATION	
1	43118	MINERAL SPIRITS	114.00	9.70	7.31	1	PARAFFIN
2	43233	N-OCTANE	114.23	.80	.60	1	PARAFFIN
3	43248	CYCLOHEXANE	84.16	9.70	9.89	1	PARAFFIN
4	45202	TOLUENE	92.13	14.80	13.84	3	AROMATIC
5	43552	METHYL ETHYL KETONE	72.10	23.40	27.94	4	CARBONYL
6	43304	ISOPROPYL ALCOHOL	60.09	9.20	13.16	5	MISCELLANEOUS
7	43305	N-BUTYL ALCOHOL	74.12	4.30	4.99	5	MISCELLANEOUS
8	43435	N-BUTYL ACETATE	116.16	11.40	8.43	5	MISCELLANEOUS
9	43444	ISOPROPYL ACETATE	104.00	16.70	13.84	5	MISCELLANEOUS
		TOTAL		100.00	100.00		
	3	COMPOUNDS OF CLASSIFICATION 1	97.43	20.20	17.80		
	0	COMPOUNDS OF CLASSIFICATION 2	.00	.00	.00		
	1	COMPOUNDS OF CLASSIFICATION 3	92.13	14.80	13.84		
	1	COMPOUNDS OF CLASSIFICATION 4	72.10	23.40	27.94		
	4	COMPOUNDS OF CLASSIFICATION 5	88.55	41.60	40.42		
	0	COMPOUNDS OF CLASSIFICATION 6	.00	.00	.00		
	0	COMPOUNDS OF CLASSIFICATION 7	.00	.00	.00		
	9	COMPOUND COMPOSITE	86.03	100.00	100.00		

NOTES: A. METHOD: CALCULATIONS FROM COMPOSITE SURVEY DATA ENGINEERING EVALUATION OF QUESTIONNAIRE DATA
B. REFERENCES: METAL FURNITURE MANUFACTURER
C. APPLICABLE SCC CATEGORIES: 4-02-006-01

DECEMBER 14, 1978 TABLE 4-02-006D POINT SOURCE EVAPORATION, SURFACE COATING
PRIMER, RED OXIDE SHOP COAT, KOPPER P-470-A-66
DATA CONFIDENCE LEVEL: III

CONTROL DEVICE: NONE
PROCESS MODIFICATION: NONE
KVB PROFILE KEY 0331

LINE NO.	SAROAD CODE	CHEMICAL NAME	MOLECULAR WEIGHT	PERCENT WEIGHT	PERCENT VOLUME	CHEMICAL CLASSIFICATION
1	43118	MINERAL SPIRITS	114.00	93.20	92.74	1 PARAFFIN
2	45102	ISOMERS OF XYLENE	106.16	6.80	7.26	3 AROMATIC
		TOTAL		100.00	100.00	
	1	COMPOUNDS OF CLASSIFICATION 1	114.00	93.20	92.74	
	0	COMPOUNDS OF CLASSIFICATION 2	.00	.00	.00	
	1	COMPOUNDS OF CLASSIFICATION 3	106.16	6.80	7.26	
	0	COMPOUNDS OF CLASSIFICATION 4	.00	.00	.00	
	0	COMPOUNDS OF CLASSIFICATION 5	.00	.00	.00	
	0	COMPOUNDS OF CLASSIFICATION 6	.00	.00	.00	
	0	COMPOUNDS OF CLASSIFICATION 7	.00	.00	.00	
	2	COMPOUND COMPOSITE	113.43	100.00	100.00	

NOTES: A. METHOD: CALCULATIONS FROM COMPOSITE SURVEY DATA ENGINEERING EVALUATION OF QUESTIONNAIRE DATA
B. REFERENCES: SHEETMETAL FABRICATOR
C. APPLICABLE SCC CATEGORIES: 4-02-006-01

DECEMBER 14, 1978 TABLE 4-02-006E POINT SOURCE EVAPORATION, SURFACE COATING
PRIMER, WATER BASED AUTOMOTIVE PAINT SPRAY BOOTH
DATA CONFIDENCE LEVEL: III

CONTROL DEVICE: NONE
PROCESS MODIFICATION: NONE
KVB PROFILE KEY 0280

LINE NO.	SAROAD CODE	CHEMICAL NAME	MOLECULAR WEIGHT	PERCENT WEIGHT	PERCENT VOLUME	CHEMICAL CLASSIFICATION
1	45202	TOLUENE	92.13	8.70	6.00	3 AROMATIC
2	43551	ACETONE	58.08	68.90	75.69	4 CARBONYL
3	45201	BENZENE	78.11	22.40	18.32	7 NON-REACTIVE
		TOTAL		100.00	100.01	
	0	COMPOUNDS OF CLASSIFICATION 1	.00	.00	.00	
	0	COMPOUNDS OF CLASSIFICATION 2	.00	.00	.00	
	1	COMPOUNDS OF CLASSIFICATION 3	92.13	8.70	6.00	
	1	COMPOUNDS OF CLASSIFICATION 4	58.08	68.90	75.69	
	0	COMPOUNDS OF CLASSIFICATION 5	.00	.00	.00	
	0	COMPOUNDS OF CLASSIFICATION 6	.00	.00	.00	
	1	COMPOUNDS OF CLASSIFICATION 7	78.11	22.40	18.32	
	3	COMPOUND COMPOSITE	63.79	100.00	100.01	

NOTES: A. METHOD: CALCULATIONS FROM COMPOSITE SURVEY DATA GC-MS ANALYSIS OF SAMPLING TRAIN CATCH AT STACK MIDPOINT
B. REFERENCES: KVB TEST DATA (REF. 3)
C. APPLICABLE SCC CATEGORIES: 4-02-006-01

DECEMBER 14, 1978 TABLE 4-02-006F POINT SOURCE EVAPORATION, SURFACE COATING
PRIMER, BLACK KOPPERS A-1131-66
DATA CONFIDENCE LEVEL: III

CONTROL DEVICE: NONE
PROCESS MODIFICATION: NONE
KVB PROFILE KEY 0281

LINE NO.	SAROAD CODE	CHEMICAL NAME	MOLECULAR WEIGHT	PERCENT WEIGHT	PERCENT VOLUME	CHEMICAL CLASSIFICATION
1	43118	MINERAL SPIRITS	114.00	100.00	100.00	1 PARAFFIN
		TOTAL		100.00	100.00	
	1	COMPOUNDS OF CLASSIFICATION 1	114.00	100.00	100.00	
	0	COMPOUNDS OF CLASSIFICATION 2	.00	.00	.00	
	0	COMPOUNDS OF CLASSIFICATION 3	.00	.00	.00	
	0	COMPOUNDS OF CLASSIFICATION 4	.00	.00	.00	
	0	COMPOUNDS OF CLASSIFICATION 5	.00	.00	.00	
	0	COMPOUNDS OF CLASSIFICATION 6	.00	.00	.00	
	0	COMPOUNDS OF CLASSIFICATION 7	.00	.00	.00	
	1	COMPOUND COMPOSITE	114.00	100.00	100.00	

NOTES: A. METHOD: CALCULATIONS FROM COMPOSITE SURVEY DATA ENGINEERING EVALUATION OF QUESTIONNAIRE DATA
B. REFERENCES: SHEETMETAL FABRICATOR
C. APPLICABLE SCC CATEGORIES: 4-02-006-01

DECEMBER 14, 1978 TABLE 4-02-006G POINT SOURCE EVAPORATION, SURFACE COATING
PRIMER, NAPHTHA
DATA CONFIDENCE LEVEL: II

CONTROL DEVICE: NONE
PROCESS MODIFICATION: NONE
KVB PROFILE KEY 0282

LINE NO.	SAROAD CODE	CHEMICAL NAME	MOLECULAR WEIGHT	PERCENT WEIGHT	PERCENT VOLUME	CHEMICAL CLASSIFICATION
1	45101	NAPHTHA	114.00	100.00	100.00	3 AROMATIC
		TOTAL		100.00	100.00	
	0	COMPOUNDS OF CLASSIFICATION 1	.00	.00	.00	
	0	COMPOUNDS OF CLASSIFICATION 2	00	.00	.00	
	1	COMPOUNDS OF CLASSIFICATION 3	114.00	100.00	100.00	
	0	COMPOUNDS OF CLASSIFICATION 4	.00	00	.00	
	0	COMPOUNDS OF CLASSIFICATION 5	.00	00	.00	
	0	COMPOUNDS OF CLASSIFICATION 6	.00	00	.00	
	0	COMPOUNDS OF CLASSIFICATION 7	.00	00	.00	
	1	COMPOUND COMPOSITE	114.00	100.00	100.00	

NOTES: A. METHOD: CALCULATIONS FROM COMPOSITE SURVEY DATA INSPECTION OF SOLVENT FORMULATION
B. REFERENCES: ENGINEERING JUDGEMENT
C. APPLICABLE SCC CATEGORIES: 4-02-006-02 (REFER ALSO TO SUMMARY INDEX)

DECEMBER 14, 1978 TABLE 4-02-006H POINT SOURCE EVAPORATION, SURFACE COATING
PRIMER, MINERAL SPIRITS
DATA CONFIDENCE LEVEL: II

CONTROL DEVICE: NONE
PROCESS MODIFICATION: NONE
KVB PROFILE KEY 0283

LINE NO.	SAROAD CODE	CHEMICAL NAME	MOLECULAR WEIGHT	PERCENT WEIGHT	PERCENT VOLUME	CHEMICAL CLASSIFICATION
1	43118	MINERAL SPIRITS	114.00	100.00	100.00	1 PARAFFIN
		TOTAL		100.00	100.00	
	1	COMPOUNDS OF CLASSIFICATION 1	114.00	100.00	100.00	
	0	COMPOUNDS OF CLASSIFICATION 2	.00	.00	.00	
	0	COMPOUNDS OF CLASSIFICATION 3	.00	.00	.00	
	0	COMPOUNDS OF CLASSIFICATION 4	.00	.00	.00	
	0	COMPOUNDS OF CLASSIFICATION 5	.00	.00	.00	
	0	COMPOUNDS OF CLASSIFICATION 6	.00	.00	.00	
	0	COMPOUNDS OF CLASSIFICATION 7	.00	.00	.00	
	1	COMPOUND COMPOSITE	114.00	100.00	100.00	

NOTES: A. METHOD: CALCULATIONS FROM COMPOSITE SURVEY DATA INSPECTION OF SOLVENT FORMULATION
B. REFERENCES: ENGINEERING JUDGEMENT
C. APPLICABLE SCC CATEGORIES: 4-02-006-04 (REFER ALSO TO SUMMARY INDEX)

DECEMBER 14, 1978 TABLE 4-02-006J POINT SOURCE EVAPORATION, SURFACE COATING
PRIMER, MINERAL SPIRITS, SPECIATION
DATA CONFIDENCE LEVEL: II

CONTROL DEVICE: NONE
PROCESS MODIFICATION: NONE
KVB PROFILE KEY 0225

LINE NO.	SAROAD CODE	CHEMICAL NAME	MOLECULAR WEIGHT	PERCENT WEIGHT	PERCENT VOLUME	CHEMICAL CLASSIFICATION
1	43107	ISOMERS OF OCTANE	114.23	.80	.97	1 PARAFFIN
2	43108	ISOMERS OF NONANE	128.25	27.30	29.42	1 PARAFFIN
3	43109	ISOMERS OF DECANE	142.28	69.30	67.27	1 PARAFFIN
4	43110	ISOMERS OF UNDECANE	156.30	2.60	2.35	1 PARAFFIN
		TOTAL		100.00	100.01	
	4	COMPOUNDS OF CLASSIFICATION 1	138.21	100.00	100.01	
	0	COMPOUNDS OF CLASSIFICATION 2	.00	.00	.00	
	0	COMPOUNDS OF CLASSIFICATION 3	.00	.00	.00	
	0	COMPOUNDS OF CLASSIFICATION 4	.00	.00	.00	
	0	COMPOUNDS OF CLASSIFICATION 5	.00	.00	.00	
	0	COMPOUNDS OF CLASSIFICATION 6	00	.00	00	
	0	COMPOUNDS OF CLASSIFICATION 7	.00	.00	.00	
	4	COMPOUND COMPOSITE	138.21	100.00	100.01	

NOTES: A. METHOD: CALCULATIONS FROM COMPOSITE SURVEY DATA INSPECTION OF CHEMICAL FORMULATION
B. REFERENCES: ENGINEERING JUDGEMENT
C. APPLICABLE SCC CATEGORIES: 4-02-006-04
D. See Appendix I-F

DECEMBER 14, 1978 TABLE 4-02-006K POINT SOURCE EVAPORATION, SURFACE COATING
PRIMER, SHELL M-75
DATA CONFIDENCE LEVEL: III

CONTROL DEVICE: NONE
PROCESS MODIFICATION: NONE
KVB PROFILE KEY 0284

LINE NO.	SAROAD CODE	CHEMICAL NAME	MOLECULAR WEIGHT	PERCENT WEIGHT	PERCENT VOLUME	CHEMICAL CLASSIFICATION
1	43118	MINERAL SPIRITS	114.00	91.70	90.74	1 PARAFFIN
2	45101	NAPHTHA	114.00	3.90	3.84	3 AROMATIC
3	45202	TOLUENE	92.13	4.40	5.42	3 AROMATIC
		TOTAL		100.00	100.00	
	1	COMPOUNDS OF CLASSIFICATION 1	114.00	91.70	90.74	
	0	COMPOUNDS OF CLASSIFICATION 2	.00	.00	.00	
	2	COMPOUNDS OF CLASSIFICATION 3	101.20	8.30	9.26	
	0	COMPOUNDS OF CLASSIFICATION 4	.00	.00	.00	
	0	COMPOUNDS OF CLASSIFICATION 5	.00	.00	.00	
	0	COMPOUNDS OF CLASSIFICATION 6	.00	.00	.00	
	0	COMPOUNDS OF CLASSIFICATION 7	.00	.00	.00	
	3	COMPOUND COMPOSITE	112.81	100.00	100.00	

NOTES: A. METHOD: CALCULATIONS FROM COMPOSITE SURVEY DATA ENGINEERING EVALUATION OF QUESTIONNAIRE DATA
B. REFERENCES: SHEETMETAL FABRICATOR
C. APPLICABLE SCC CATEGORIES: 4-02-006-99

DECEMBER 14, 1978 TABLE 4-02-007A POINT SOURCE EVAPORATION, SURFACE COATING
ADHESIVES, LABEL
DATA CONFIDENCE LEVEL: IV

CONTROL DEVICE: NONE
PROCESS MODIFICATION: NONE
KVB PROFILE KEY 0141

LINE NO.	SAROAD CODE	CHEMICAL NAME	MOLECULAR WEIGHT	PERCENT WEIGHT	PERCENT VOLUME	CHEMICAL CLASSIFICATION
1	45102	ISOMERS OF XYLENE	106.16	22.00	17.69	3 AROMATIC
2	45202	TOLUENE	92.13	54.00	50.09	3 AROMATIC
3	43551	ACETONE	58.08	13.00	19.15	4 CARBONYL
4	43552	METHYL ETHYL KETONE	72.10	11.00	13.08	4 CARBONYL
		TOTAL		100.00	100.01	
	0	COMPOUNDS OF CLASSIFICATION 1	.00	.00	.00	
	0	COMPOUNDS OF CLASSIFICATION 2	.00	.00	.00	
	2	COMPOUNDS OF CLASSIFICATION 3	95.79	76.00	67.78	
	2	COMPOUNDS OF CLASSIFICATION 4	63.77	24.00	32.23	
	0	COMPOUNDS OF CLASSIFICATION 5	.00	.00	.00	
	0	COMPOUNDS OF CLASSIFICATION 6	.00	.00	.00	
	0	COMPOUNDS OF CLASSIFICATION 7	.00	.00	.00	
	4	COMPOUND COMPOSITE	85.47	100.00	100.01	

NOTES: A. METHOD: CALCULATIONS FROM COMPOSITE SURVEY DATA ENGINEERING EVALUATION OF QUESTIONNAIRE DATA
B. REFERENCES: PRESSURE SENSITIVE LABEL MANUFACTURER
C. APPLICABLE SCC CATEGORIES: 4-02-007-01

DECEMBER 14, 1978 TABLE 4-02-007B POINT SOURCE EVAPORATION, SURFACE COATING
ADHESIVE, METAL FURNITURE
DATA CONFIDENCE LEVEL: III

CONTROL DEVICE: NONE
PROCESS MODIFICATION: NONE
KVB PROFILE KEY 0142

LINE NO.	SAROAD CODE	CHEMICAL NAME	MOLECULAR WEIGHT	PERCENT WEIGHT	PERCENT VOLUME	CHEMICAL CLASSIFICATION
1	43118	MINERAL SPIRITS	114.00	50.00	37.43	1 PARAFFIN
2	45202	TOLUENE	92.13	20.00	18.50	3 AROMATIC
3	43551	ACETONE	58.08	30.00	44.08	4 CARBONYL
		TOTAL		100.00	100.01	
	1	COMPOUNDS OF CLASSIFICATION 1	114.00	50.00	37.43	
	0	COMPOUNDS OF CLASSIFICATION 2	.00	.00	.00	
	1	COMPOUNDS OF CLASSIFICATION 3	92.13	20.00	18.50	
	1	COMPOUNDS OF CLASSIFICATION 4	58.08	30.00	44.08	
	0	COMPOUNDS OF CLASSIFICATION 5	.00	.00	.00	
	0	COMPOUNDS OF CLASSIFICATION 6	.00	.00	.00	
	0	COMPOUNDS OF CLASSIFICATION 7	.00	.00	.00	
	3	COMPOUND COMPOSITE	85.31	100.00	100.01	

NOTES: A. METHOD: CALCULATIONS FROM COMPOSITE SURVEY DATA ENGINEERING EVALUATION OF QUESTIONNAIRE DATA
B. REFERENCES: CUSHION SPRING MANUFACTURER FOR FURNITURE AND BEDDING
C. APPLICABLE SCC CATEGORIES: 4-02-007-01

DECEMBER 14, 1978 TABLE 4-02-007C POINT SOURCE EVAPORATION, SURFACE COATING ADHESIVE, AUTOMOTIVE VINYL TOP SPRAY BOOTH DATA CONFIDENCE LEVEL: III

CONTROL DEVICE: NONE
PROCESS MODIFICATION: NONE
KVB PROFILE KEY 0285

LINE NO.	SAROAD CODE	CHEMICAL NAME	MOLECULAR WEIGHT	PERCENT WEIGHT	PERCENT VOLUME	CHEMICAL CLASSIFICATION	
1	43231	N-HEXANE	86.17	14.50	13.40	1	PARAFFIN
2	45202	TOLUENE	92.13	14.30	12.36	3	AROMATIC
3	43551	ACETONE	58.08	12.50	17.15	4	CARBONYL
4	43433	ETHYL ACETATE	88.10	24.30	22.01	5	MISCELLANEOUS
5	45201	BENZENE	78.11	34.40	35.09	7	NON-REACTIVE
		TOTAL		100.00	100.01		

1	COMPOUNDS OF CLASSIFICATION 1	86.17	14.50	13.40
0	COMPOUNDS OF CLASSIFICATION 2	.00	.00	.00
1	COMPOUNDS OF CLASSIFICATION 3	92.13	14.30	12.36
1	COMPOUNDS OF CLASSIFICATION 4	58.08	12.50	17.15
1	COMPOUNDS OF CLASSIFICATION 5	88.10	24.30	22.01
0	COMPOUNDS OF CLASSIFICATION 6	.00	00	.00
1	COMPOUNDS OF CLASSIFICATION 7	78.11	34.40	35.09
5	COMPOUND COMPOSITE	79.69	100.00	100.01

NOTES:
A. METHOD: CALCULATIONS FROM COMPOSITE SURVEY DATA GC-MS ANALYSIS OF SAMPLING TRAIN CATCH AT STACK MIDPOINT
B. REFERENCES: KVB TEST DATA (REF. 3)
C. APPLICABLE SCC CATEGORIES: 4-02-007-01

DECEMBER 14, 1978 TABLE 4-02-007D POINT SOURCE EVAPORATION, SURFACE COATING ADHESIVES, FOSTER BOND SEAL NO. 107 DATA CONFIDENCE LEVEL: III

CONTROL DEVICE: NONE
PROCESS MODIFICATION: NONE
KVB PROFILE KEY 0145

LINE NO.	SAROAD CODE	CHEMICAL NAME	MOLECULAR WEIGHT	PERCENT WEIGHT	PERCENT VOLUME	CHEMICAL CLASSIFICATION
1	43817	PERCHLOROETHYLENE	165.83	100.00	100.00	5 MISCELLANEOUS
		TOTAL		100.00	100.00	
	0	COMPOUNDS OF CLASSIFICATION 1	.00	.00	.00	
	0	COMPOUNDS OF CLASSIFICATION 2	.00	.00	.00	
	0	COMPOUNDS OF CLASSIFICATION 3	.00	.00	.00	
	0	COMPOUNDS OF CLASSIFICATION 4	.00	.00	.00	
	1	COMPOUNDS OF CLASSIFICATION 5	165.83	100.00	100.00	
	0	COMPOUNDS OF CLASSIFICATION 6	.00	.00	.00	
	0	COMPOUNDS OF CLASSIFICATION 7	.00	.00	.00	
	1	COMPOUND COMPOSITE	165.83	100.00	100.00	

NOTES:
A. METHOD: CALCULATIONS FROM COMPOSITE SURVEY DATA GC-MS ANALYSIS OF SAMPLING TRAIN CATCH
B. REFERENCES: KVB TEST DATA (REF. 3)
C. APPLICABLE SCC CATEGORIES: 4-02-007-01,-99

DECEMBER 14, 1978 TABLE 4-02-007E POINT SOURCE EVAPORATION, SURFACE COATING
ADHESIVE, BENZENE
DATA CONFIDENCE LEVEL: II

CONTROL DEVICE: NONE
PROCESS MODIFICATION: NONE
KVB PROFILE KEY 0287

LINE NO.	SAROAD CODE	CHEMICAL NAME	MOLECULAR WEIGHT	PERCENT WEIGHT	PERCENT VOLUME	CHEMICAL CLASSIFICATION
1	45201	BENZENE	78.11	100.00	100.00	7 NON-REACTIVE
		TOTAL		100.00	100.00	
	0	COMPOUNDS OF CLASSIFICATION 1	.00	00	.00	
	0	COMPOUNDS OF CLASSIFICATION 2	.00	00	.00	
	0	COMPOUNDS OF CLASSIFICATION 3	.00	00	.00	
	0	COMPOUNDS OF CLASSIFICATION 4	.00	00	.00	
	0	COMPOUNDS OF CLASSIFICATION 5	.00	00	.00	
	0	COMPOUNDS OF CLASSIFICATION 6	00	00	.00	
	1	COMPOUNDS OF CLASSIFICATION 7	78.11	100.00	100.00	
	1	COMPOUND COMPOSITE	78.11	100.00	100.00	

NOTES: A. METHOD: CALCULATIONS FROM COMPOSITE SURVEY DATA INSPECTION OF SOLVENT FORMULATION
B. REFERENCES: ENGINEERING JUDGEMENT
C. APPLICABLE SCC CATEGORIES: 4-02-007-04

DECEMBER 14, 1978 TABLE 4-02-999A POINT SOURCE EVAPORATION, SURFACE COATING
CITRUS COATING WAX, BROGDEX 502
DATA CONFIDENCE LEVEL: I

CONTROL DEVICE: NONE
PROCESS MODIFICATION: NONE
KVB PROFILE KEY 0293

LINE NO.	SAROAD CODE	CHEMICAL NAME	MOLECULAR WEIGHT	PERCENT WEIGHT	PERCENT VOLUME	CHEMICAL CLASSIFICATION
1	43231	N-HEXANE	86.17	34.00	34.83	1 PARAFFIN
2	43248	CYCLOHEXANE	84.16	43.10	45.15	1 PARAFFIN
3	45102	ISOMERS OF XYLENE	106.16	6.60	5.47	3 AROMATIC
4	45202	TOLUENE	92.13	7.60	7.32	3 AROMATIC
5	45203	ETHYLBENZENE	106.16	8.70	7.23	3 AROMATIC
		TOTAL		100.00	100.00	
	2	COMPOUNDS OF CLASSIFICATION 1	85.04	77.10	79.98	
	0	COMPOUNDS OF CLASSIFICATION 2	.00	.00	.00	
	3	COMPOUNDS OF CLASSIFICATION 3	101.03	22.90	20.02	
	0	COMPOUNDS OF CLASSIFICATION 4	.00	.00	.00	
	0	COMPOUNDS OF CLASSIFICATION 5	.00	.00	.00	
	0	COMPOUNDS OF CLASSIFICATION 6	.00	.00	.00	
	0	COMPOUNDS OF CLASSIFICATION 7	.00	.00	.00	
	5	COMPOUND COMPOSITE	88.24	100.00	100.00	

NOTES: A. METHOD: CALCULATIONS FROM COMPOSITE SURVEY DATA ENGINEERING EVALUATION OF QUESTIONNAIRE DATA
B. REFERENCES: CITRUS COATING WAX MANUFACTURER
C. APPLICABLE SCC CATEGORIES: 4-02-999-99

DECEMBER 14, 1978 TABLE 4-02-999B POINT SOURCE EVAPORATION, SURFACE COATING
CITRUS COATING WAX, FLAVORSEAL 320-0820
DATA CONFIDENCE LEVEL: I

CONTROL DEVICE: NONE
PROCESS MODIFICATION: NONE
KVB PROFILE KEY 0294

LINE NO.	SAROAD CODE	CHEMICAL NAME	MOLECULAR WEIGHT	PERCENT WEIGHT	PERCENT VOLUME	CHEMICAL CLASSIFICATION
1	45102	ISOMERS OF XYLENE	106.16	41.60	42.38	3 AROMATIC
2	45104	ISOMERS OF ETHYLTOLUENE	120.19	12.20	11.03	3 AROMATIC
3	45107	ISOMERS OF TRIMETHYLBENZENE	120.19	20.10	18.05	3 AROMATIC
4	45108	ISOMERS OF PROPYLBENZENE	120.19	2.10	1.95	3 AROMATIC
5	45202	TOLUENE	92.13	13.70	16.11	3 AROMATIC
6	45203	ETHYLBENZENE	106.16	10.30	10.49	3 AROMATIC
		TOTAL		100.00	100.01	
	0	COMPOUNDS OF CLASSIFICATION 1	.00	.00	.00	
	0	COMPOUNDS OF CLASSIFICATION 2	00	.00	.00	
	6	COMPOUNDS OF CLASSIFICATION 3	108.25	100.00	100.01	
	0	COMPOUNDS OF CLASSIFICATION 4	.00	.00	.00	
	0	COMPOUNDS OF CLASSIFICATION 5	.00	.00	.00	
	0	COMPOUNDS OF CLASSIFICATION 6	.00	00	.00	
	0	COMPOUNDS OF CLASSIFICATION 7	.00	00	.00	
	6	COMPOUND COMPOSITE	108.25	100.00	100.01	

NOTES: A. METHOD: CALCULATIONS FROM COMPOSITE SURVEY DATA ENGINEERING EVALUATION OF QUESTIONNAIRE DATA
B. REFERENCES: CITRUS COATING WAX MANUFACTURER
C. APPLICABLE SCC CATEGORIES: 4-02-999-99

DECEMBER 14, 1978 TABLE 4-02-999C POINT SOURCE EVAPORATION, SURFACE COATING
CITRUS COATING WAX, FLAVORSEAL 115-1800
DATA CONFIDENCE LEVEL: I

CONTROL DEVICE: NONE
PROCESS MODIFICATION: NONE
KVB PROFILE KEY 0295

LINE NO.	SAROAD CODE	CHEMICAL NAME	MOLECULAR WEIGHT	PERCENT WEIGHT	PERCENT VOLUME	CHEMICAL CLASSIFICATION	
1	45102	ISOMERS OF XYLENE	106.16	32.63	31.07	3	AROMATIC
2	45104	ISOMERS OF ETHYLTOLUENE	120.19	7.33	6.17	3	AROMATIC
3	45107	ISOMERS OF TRIMETHYLBENZENE	120.19	8.92	7.49	3	AROMATIC
4	45108	ISOMERS OF PROPYLBENZENE	120.19	1.91	1.62	3	AROMATIC
5	45202	TOLUENE	92.13	39.07	42.91	3	AROMATIC
6	45203	ETHYLBENZENE	106.16	7.03	6.68	3	AROMATIC
7	45201	BENZENE	78.11	3.11	4.05	7	NON-REACTIVE
		TOTAL		100.00	99.99		
	0	COMPOUNDS OF CLASSIFICATION 1	.00	.00	.00		
	0	COMPOUNDS OF CLASSIFICATION 2	.00	.00	.00		
	6	COMPOUNDS OF CLASSIFICATION 3	102.12	96.89	95.94		
	0	COMPOUNDS OF CLASSIFICATION 4	.00	.00	.00		
	0	COMPOUNDS OF CLASSIFICATION 5	.00	.00	.00		
	0	COMPOUNDS OF CLASSIFICATION 6	.00	.00	.00		
	1	COMPOUNDS OF CLASSIFICATION 7	78.11	3.11	4.05		
	7	COMPOUND COMPOSITE	101.15	100.00	99.99		

NOTES: A. METHOD: CALCULATIONS FROM COMPOSITE SURVEY DATA ENGINEERING EVALUATION OF QUESTIONNAIRE DATA
B. REFERENCES: CITRUS COATING WAX MANUFACTURER
C. APPLICABLE SCC CATEGORIES: 4-02-999-99

REFERENCES

1. Danielson, J. A. (ed.), "Air Pollution Engineering Manual," Environmental Protection Agency, Research Triangle Park, NC, AP-40, May 1973.

2. "Compilation of Pollutant Emission Factors," Environmental Protection Agency, Research Triangle Park, NC, AP-42, August 1977.

3. Taback, H. J., et al., "Control of Hydrocarbon Emissions from Stationary Sources in the California South Coast Air Basin," Vol. I and II, KVB, Inc., Tustin, CA, June 1978.

4-02-008 COATING OVENS

Process Description[1]

Coating ovens involve the process of drying and the process of baking, curing, or polymerizing coatings. In both processes, heat is used to remove residual solvents, but in baking, curing or polymerizing, the heat also serves to produce desired chemical changes in the coating.

Bake ovens are designed for processing on either an intermittent batch basis, or on a continuous web or conveyor-fed basis. Common methods of oven heating include:

- gas - direct fired
  - indirect fired
- electric - resistance heaters
  - infrared heating
- steam - indirect method, and
- waste heat discharged from other equipment

For further process information, consult AP-40 (Ref. 1).

Emissions[1]

The air pollutants emitted from a surface coating oven are generally composed of organic vapors and aerosols. Particulates and the products of incomplete combustion can pose additional air pollution problems when gas or oil-fired heating systems are used.

Organic solvent vapors are emitted during the evaporation of the organic thinners and dilutents contained in the surface coating. The composition of the organic solvent vapors emitted will differ based on the composition of the solvents used in the coating material.

Estimating the emission rate of VOC's from an oven involves consideration of:

1. The quantity and composition of coating material used,

2. method of application
3. factors affecting solvent evaporation prior to oven treatment (ambient temperature, pressure and humidity, air movement, surface characteristics of the coating, solvent volatility, time), and
4. reduction by combustion in the oven heating system.

An illustrative example is presented in AP-40 as an aid in estimating emissions (Ref. 1).

Profiles 4-02-008A through C present the VOC emissions estimated to be eminating from various coating oven operations (Ref. 2).

Controls[1]

Effluent streams from solvent based surface coating ovens can best be controlled through the use of afterburner equipment.

The choice between direct flame and catalytic incineration methods must be based on economic factors and on the requirements of local air pollution control agencies.

Process Modification

Appropriate substitutes for organic solvent borne coatings exist in the increasingly popular water-borne coatings. Generally known as water-based paints or latexes, they do have lower organic solvent contents than the high solvent based coatings.

Profile Basis[2]

Profiles 4-02-008A through F are based on field tests conducted at various coating oven operations. VOC samples were collected by means of gas collecting bottles and NIOSH charcoal sample tubes. Details of each test can be found in Reference 2.

Data Qualification

Details of the methods used to estimate VOC emission rates are presented in AP-40 (Ref. 1).

Profiles 4-02-008A through F may be used to characterize the VOC emissions for the indicated surface coating oven operations as described in each profile.

DECEMBER 14, 1978 TABLE 4-02-008A POINT SOURCE EVAPORATION, SURFACE COATING
COATING OVEN, METAL PARTS, GENERAL
DATA CONFIDENCE LEVEL. III

CONTROL DEVICE: NONE
PROCESS MODIFICATION: NONE
KVB PROFILE KEY 0092

LINE NO.	SAROAD CODE	CHEMICAL NAME	MOLECULAR WEIGHT	PERCENT WEIGHT	PERCENT VOLUME	CHEMICAL CLASSIFICATION	
1	43204	PROPANE	44.09	3.10	1.44	1	PARAFFIN
2	43212	N-BUTANE	58.12	23.40	8.30	1	PARAFFIN
3	43203	ETHYLENE	28.05	2.00	1.46	2	OLEFIN
4	43201	METHANE	16.04	66.50	85.38	6	METHANE
5	43202	ETHANE	30.07	5.00	3.42	7	NON-REACTIVE
		TOTAL		100.00	100.00		
	2	COMPOUNDS OF CLASSIFICATION 1	56.05	26.50	9.74		
	1	COMPOUNDS OF CLASSIFICATION 2	28.05	2.00	1.46		
	0	COMPOUNDS OF CLASSIFICATION 3	00	00	.00		
	0	COMPOUNDS OF CLASSIFICATION 4	00	00	.00		
	0	COMPOUNDS OF CLASSIFICATION 5	00	.00	.00		
	1	COMPOUNDS OF CLASSIFICATION 6	16.04	66.50	85.38		
	1	COMPOUNDS OF CLASSIFICATION 7	30.07	5.00	3.42		
	5	COMPOUND COMPOSITE	20.59	100.00	100.00		

NOTES: A. METHOD: CALCULATIONS FROM COMPOSITE SURVEY DATA ENGINEERING EVALUATION OF KVB TEST DATA
B. REFERENCES: T.W. SONNICHSEN, KVB ENGINEER
C. APPLICABLE SCC CATEGORIES: 4-02-008-01

DECEMBER 14, 1978 TABLE 4-008B

POINT SOURCE EVAPORATION, SURFACE COATING
COATING OVEN, WATER BASED AUTOMOTIVE PRIMER, NATURAL GAS FIRED
DATA CONFIDENCE LEVEL: III

CONTROL DEVICE: NONE
PROCESS MODIFICATION: NONE
KVB PROFILE KEY 0279

LINE NO.	SAROAD CODE	CHEMICAL NAME	MOLECULAR WEIGHT	PERCENT WEIGHT	PERCENT VOLUME	CHEMICAL CLASSIFICATION
1	43203	ETHYLENE	28.05	2.40	2.47	2 OLEFIN
2	45202	TOLUENE	92.13	10.60	3.31	3 AROMATIC
3	43551	ACETONE	58.08	30.20	14.96	4 CARBONYL
4	43201	METHANE	16.04	39.90	71.60	6 METHANE
5	43202	ETHANE	30.07	2.40	2.30	7 NON-REACTIVE
6	45201	BENZENE	78.11	14.50	5.35	7 NON-REACTIVE
		TOTAL		100.00	99.99	
	0	COMPOUNDS OF CLASSIFICATION 1	.00	.00	.00	
	1	COMPOUNDS OF CLASSIFICATION 2	28.05	2.40	2.47	
	1	COMPOUNDS OF CLASSIFICATION 3	92.13	10.60	3.31	
	1	COMPOUNDS OF CLASSIFICATION 4	58.08	30.20	14.96	
	0	COMPOUNDS OF CLASSIFICATION 5	.00	.00	.00	
	1	COMPOUNDS OF CLASSIFICATION 6	16.04	39.90	71.60	
	2	COMPOUNDS OF CLASSIFICATION 7	63.67	16.90	7.65	
	6	COMPOUND COMPOSITE	28.79	100.00	99.99	

NOTES: A. METHOD: CALCULATIONS FROM COMPOSITE SURVEY DATA GC-MS ANALYSIS OF SAMPLING TRAIN CATCH AT STACK MIDPOINT
B. REFERENCES: KVB TEST DATA (REF. 2)
C. APPLICABLE SCC CATEGORIES: 4-02-008-03

DECEMBER 14, 1978 TABLE 4-02-008C POINT SOURCE EVAPORATION, SURFACE COATING
COATING OVEN, ZINC CHROMATE INFRARED DRYER
DATA CONFIDENCE LEVEL: II

CONTROL DEVICE: NONE
PROCESS MODIFICATION: NONE
KVB PROFILE KEY 0056

LINE NO.	SAROAD CODE	CHEMICAL NAME	MOLECULAR WEIGHT	PERCENT WEIGHT	PERCENT VOLUME	CHEMICAL CLASSIFICATION	
1	43106	ISOMERS OF HEPTANE	100.20	.70	.81	1	PARAFFIN
2	43107	ISOMERS OF OCTANE	114.23	.60	.58	1	PARAFFIN
3	43108	ISOMERS OF NONANE	128.25	10.10	9.14	1	PARAFFIN
4	43115	C-7 CYCLOPARAFFINS	98.19	1.40	1.62	1	PARAFFIN
5	43116	C-8 CYCLOPARAFFINS	112.23	25.60	26.39	1	PARAFFIN
6	43117	C-9 CYCLOPARAFFINS	126.26	5.00	4.63	1	PARAFFIN
7	43231	N-HEXANE	86.17	.20	.23	1	PARAFFIN
8	43232	N-HEPTANE	100.20	1.40	1.62	1	PARAFFIN
9	43233	N-OCTANE	114.23	46.50	47.11	1	PARAFFIN
10	43235	N-NONANE	128.25	7.30	6.60	1	PARAFFIN
11	45102	ISOMERS OF XYLENE	106.16	1.00	1.04	3	AROMATIC
12	45202	TOLUENE	92.13	.20	.23	3	AROMATIC
		TOTAL		100.00	100.00		
	10	COMPOUNDS OF CLASSIFICATION 1	115.82	98.80	98.73		
	0	COMPOUNDS OF CLASSIFICATION 2	.00	.00	.00		
	2	COMPOUNDS OF CLASSIFICATION 3	103.62	1.20	1.27		
	0	COMPOUNDS OF CLASSIFICATION 4	.00	00	.00		
	0	COMPOUNDS OF CLASSIFICATION 5	.00	.00	.00		
	0	COMPOUNDS OF CLASSIFICATION 6	.00	.00	.00		
	0	COMPOUNDS OF CLASSIFICATION 7	.00	.00	.00		
	12	COMPOUND COMPOSITE	115.67	100.00	100.00		

NOTES: A. METHOD: CALCULATIONS FROM COMPOSITE SURVEY DATA GC-MS ANALYSIS OF GRAB SAMPLE
B. REFERENCES: KVB TEST DATA (REF. 2)
C. APPLICABLE SCC CATEGORIES: 4-02-008-99

DECEMBER 14, 1978 TABLE 4-02-008D POINT SOURCE EVAPORATION, SURFACE COATING
COATING OVEN, ADHESIVE, AUTOMOBILE VINYL TOP, NATURAL GAS FIRED
DATA CONFIDENCE LEVEL: III

CONTROL DEVICE: NONE
PROCESS MODIFICATION: NONE
KVB PROFILE KEY 0286

LINE NO.	SAROAD CODE	CHEMICAL NAME	MOLECULAR WEIGHT	PERCENT WEIGHT	PERCENT VOLUME	CHEMICAL CLASSIFICATION	
1	43204	PROPANE	44.09	1.60	2.65	1	PARAFFIN
2	43214	ISOBUTANE	58.12	11.10	14.03	1	PARAFFIN
3	45202	TOLUENE	92.13	2.70	2.13	3	AROMATIC
4	43551	ACETONE	58.08	25.40	32.11	4	CARBONYL
5	43433	ETHYL ACETATE	88.10	12.40	10.36	5	MISCELLANEOUS
6	43817	PERCHLOROETHYLENE	165.83	41.90	18.59	5	MISCELLANEOUS
7	43201	METHANE	16.04	3.80	17.41	6	METHANE
8	43202	ETHANE	30.07	1.10	2.72	7	NON-REACTIVE
		TOTAL		100.00	100.00		
	2	COMPOUNDS OF CLASSIFICATION 1	55.89	12.70	16.68		
	0	COMPOUNDS OF CLASSIFICATION 2	.00	.00	.00		
	1	COMPOUNDS OF CLASSIFICATION 3	92.13	2.70	2.13		
	1	COMPOUNDS OF CLASSIFICATION 4	58.08	25.40	32.11		
	2	COMPOUNDS OF CLASSIFICATION 5	138.01	54.30	28.95		
	1	COMPOUNDS OF CLASSIFICATION 6	16.04	3.80	17.41		
	1	COMPOUNDS OF CLASSIFICATION 7	30.07	1.10	2.72		
	8	COMPOUND COMPOSITE	73.50	100.00	100.00		

NOTES: A. METHOD: CALCULATIONS FROM COMPOSITE SURVEY DATA GC-MS ANALYSIS OF SAMPLING TRAIN CATCH AT STACK MIDPOINT
B. REFERENCES: KVB TEST DATA (REF. 2)
C. APPLICABLE SCC CATEGORIES: 4-02-008-99

DECEMBER 14, 1978 TABLE 4-02-008E POINT SOURCE EVAPORATION, SURFACE COATING
COATING OVEN, ENAMEL GENERAL, GAS FIRED
DATA CONFIDENCE LEVEL: IV

CONTROL DEVICE: NONE
PROCESS MODIFICATION: NONE
KVB PROFILE KEY 0162

LINE NO.	SAROAD CODE	CHEMICAL NAME	MOLECULAR WEIGHT	PERCENT WEIGHT	PERCENT VOLUME	CHEMICAL CLASSIFICATION	
1	43118	MINERAL SPIRITS	114.00	25.80	14.13	1	PARAFFIN
2	43204	PROPANE	44.09	.30	.44	1	PARAFFIN
3	43212	N-BUTANE	58.12	.10	.13	1	PARAFFIN
4	43220	N-PENTANE	72.15	.60	.50	1	PARAFFIN
5	43205	PROPYLENE	42.08	2.40	3.56	2	OLEFIN
6	43213	BUTENE	56.10	.90	1.00	2	OLEFIN
7	43224	1-PENTENE	70.13	2.40	2.13	2	OLEFIN
8	45202	TOLUENE	92.13	2.10	1.44	3	AROMATIC
9	43502	FORMALDEHYDE	30.03	3.30	6.88	4	CARBONYL
10	43551	ACETONE	58.08	.60	.63	4	CARBONYL
11	43206	ACETYLENE	26.04	.30	.75	5	MISCELLANEOUS
12	43304	ISOPROPYL ALCOHOL	60.09	7.00	7.31	5	MISCELLANEOUS
13	43432	METHYL ACETATE	74.08	3.10	2.63	5	MISCELLANEOUS
14	43435	N-BUTYL ACETATE	116.16	29.60	15.94	5	MISCELLANEOUS
15	43444	ISOPROPYL ACETATE	104.00	12.50	7.50	5	MISCELLANEOUS
16	43201	METHANE	16.04	9.00	35.06	6	METHANE
		TOTAL		100.00	100.03		
	4	COMPOUNDS OF CLASSIFICATION 1	110.12	26.80	15.20		
	3	COMPOUNDS OF CLASSIFICATION 2	53.11	5.70	6.69		
	1	COMPOUNDS OF CLASSIFICATION 3	92.13	2.10	1.44		
	2	COMPOUNDS OF CLASSIFICATION 4	32.38	3.90	7.51		
	5	COMPOUNDS OF CLASSIFICATION 5	96.26	52.50	34.13		
	1	COMPOUNDS OF CLASSIFICATION 6	16.04	9.00	35.06		
	0	COMPOUNDS OF CLASSIFICATION 7	.00	.00	.00		
	16	COMPOUND COMPOSITE	62.51	100.00	100.03		

NOTES: A. METHOD: CALCULATIONS FROM COMPOSITE SURVEY DATA ENGINEERING EVALUATION OF QUESTIONNAIRE DATA
B. REFERENCES: APPLIANCE MANUFACTURER
C. APPLICABLE SCC CATEGORIES: 4-02-008-99

DECEMBER 14, 1978 TABLE 4-02-008F POINT SOURCE EVAPORATION, SURFACE COATING
DRYING OVEN, LACQUER, AUTOMOTIVE, GAS FIRED
DATA CONFIDENCE LEVEL: III

CONTROL DEVICE: NONE
PROCESS MODIFICATION: NONE
KVB PROFILE KEY 0154

LINE NO.	SAROAD CODE	CHEMICAL NAME	MOLECULAR WEIGHT	PERCENT WEIGHT	PERCENT VOLUME	CHEMICAL CLASSIFICATION
1	43122	ISOMERS OF PENTANE	72.15	3.90	4.13	1 PARAFFIN
2	43212	N-BUTANE	58.12	13.80	18.11	1 PARAFFIN
3	43214	ISOBUTANE	58.12	10.60	13.90	1 PARAFFIN
4	43231	N-HEXANE	86.17	6.20	5.50	1 PARAFFIN
5	43232	N-HEPTANE	100.20	12.80	9.78	1 PARAFFIN
6	45202	TOLUENE	92.13	31.80	26.36	3 AROMATIC
7	43551	ACETONE	58.08	5.30	6.95	4 CARBONYL
8	45201	BENZENE	78.11	15.60	15.28	7 NON-REACTIVE
		TOTAL		100.00	100.01	
	5	COMPOUNDS OF CLASSIFICATION 1	70.25	47.30	51.42	
	0	COMPOUNDS OF CLASSIFICATION 2	.00	.00	.00	
	1	COMPOUNDS OF CLASSIFICATION 3	92.13	31.80	26.36	
	1	COMPOUNDS OF CLASSIFICATION 4	58.08	5.30	6.95	
	0	COMPOUNDS OF CLASSIFICATION 5	.00	.00	.00	
	0	COMPOUNDS OF CLASSIFICATION 6	.00	.00	.00	
	1	COMPOUNDS OF CLASSIFICATION 7	78.11	15.60	15.28	
	8	COMPOUND COMPOSITE	76.37	100.00	100.01	

NOTES: A. METHOD: CALCULATIONS FROM COMPOSITE SURVEY DATA GC-MS ANALYSIS OF SAMPLING TRAIN CATCH
B. REFERENCES: KVB TEST DATA (REF. 2)
C. APPLICABLE SCC CATEGORIES: 4-02-008-99

REFERENCES

1. Danielson, J. A., (ed.), "Air Pollution Engineering Manual," Environmental Protection Agency, Research Triangle Park, NC, AP-40, May 1973.

2. Taback, H. J., et al., "Control of Hydrocarbon Emissions from Stationary Sources in the California South Coast Air Basin," Vol. I and II, KVB, Inc., Tustin, CA, June 1978.

4-02 POINT SOURCE EVAPORATION, SURFACE COATING

4-02-009 SOLVENTS

Process Description[1]

As described in AP-40, organic solvents are some of the most common and widely used products of our society. They are involved in our daily lives in such activities as making and cleaning the clothes we wear, making and coating the vehicles we drive, packaging the foods we eat, printing the materials we read, and finishing the furniture we use.

Emissions[1]

After an organic solvent has served its purpose, its continued presence in the product is usually undesired and it must be removed. In so doing, it may be recovered for reuse and recycling. Too often, however, the solvent is wasted to the atmosphere by natural or forced evaporation. When architectural coatings are applied with solvents, the solvents must evaporate into the atmosphere so that the coating can form a film or barrier. When industrial coatings are applied with solvents, the solvents are discharged into the atmosphere by forced evaporation in ovens. When clothes are cleaned with solvents, the solvents must be removed, usually by heat, before the clothes can be worn again.

These organic emissions may represent a substantial portion of all organic vapors present in a community's atmosphere. A rule of thumb which has been reasonably close for Los Angeles County indicates that about 1/6 pound of solvent is emitted each day for each person.

Profiles 4-02-009A through K characterize the VOC species being emitted from various solvents.

Controls[1]

Controls for volatile organic vapors from point sources generally take the form of thermal or catalytic incinerators, or activated carbon adsorbers.

Where large volumes of air are involved, neither control method may prove feasible. In such instances, it has proven more ecomonical to reformulate the solvent systems to the extent of making them nonphotochemically reactive and thereby removing the limitation on the quantity of organic material which may be emitted. This is especially true in the area of architectural surface coatings - see Section 9-35-103.

Various problems such as cost considerations, relative solvency, evaporation rates, compatibilities, and partial solvation of undercoats to name a few, however, are encountered in this approach.

The degree of control is generally mandated by local air pollution regulations.

Profile Basis[2]

Profiles 4-02-009A through K are based on an engineering evaluation of the various solvents used in formulating surface coatings or in the application of these coatings for finishing purposes.

Data Qualification

Profiles 4-02-009A through K may be used to characterize the volatile organic vapors eminating from these solvents as indicated on the different profiles.

DECEMBER 14, 1978 TABLE 4-02-009A POINT SOURCE EVAPORATION, SURFACE COATING
SOLVENT, GENERAL
DATA CONFIDENCE LEVEL: III

CONTROL DEVICE: NONE
PROCESS MODIFICATION: NONE
KVB PROFILE KEY 0096

LINE NO.	SAROAD CODE	CHEMICAL NAME	MOLECULAR WEIGHT	PERCENT WEIGHT	PERCENT VOLUME	CHEMICAL CLASSIFICATION
1	43107	ISOMERS OF OCTANE	114.23	40	.34	1 PARAFFIN
2	43108	ISOMERS OF NONANE	128.25	10.90	7.18	1 PARAFFIN
3	43109	ISOMERS OF DECANE	142.28	27.80	16.47	1 PARAFFIN
4	43110	ISOMERS OF UNDECANE	156.30	1.00	.51	1 PARAFFIN
5	45102	ISOMERS OF XYLENE	106.16	4.00	3.21	3 AROMATIC
6	45202	TOLUENE	92.13	4.00	3.63	3 AROMATIC
7	43551	ACETONE	58.08	10.00	14.53	4 CARBONYL
8	43552	METHYL ETHYL KETONE	72.10	10.00	11.74	4 CARBONYL
9	43560	METHYL ISOBUTYL KETONE	100.16	5.00	4.22	4 CARBONYL
10	43301	METHYL ALCOHOL	32.04	5.60	14.78	5 MISCELLANEOUS
11	43302	ETHYL ALCOHOL	46.07	5.60	10.30	5 MISCELLANEOUS
12	43304	ISOPROPYL ALCOHOL	60.09	5.70	8.02	5 MISCELLANEOUS
13	43817	PERCHLOROETHYLENE	165.83	10.00	5.07	5 MISCELLANEOUS
		TOTAL		100.00	100.00	
	4	COMPOUNDS OF CLASSIFICATION 1	138.07	40.10	24.50	
	0	COMPOUNDS OF CLASSIFICATION 2	.00	00	00	
	2	COMPOUNDS OF CLASSIFICATION 3	98.71	8.00	6.84	
	3	COMPOUNDS OF CLASSIFICATION 4	69.30	25.00	30.49	
	4	COMPOUNDS OF CLASSIFICATION 5	59.49	26.90	38.17	
	0	COMPOUNDS OF CLASSIFICATION 6	.00	.00	.00	
	0	COMPOUNDS OF CLASSIFICATION 7	.00	00	.00	
	13	COMPOUND COMPOSITE	84.42	100.00	100.00	

NOTES: A. METHOD: CALCULATIONS FROM COMPOSITE SURVEY DATA ENGINEERING EVALUATION OF LITERATURE DATA
B. REFERENCES: LITERATURE DATA (REF. 3)
C. APPLICABLE SCC CATEGORIES: 4-02-009-01

DECEMBER 14, 1978 TABLE 4-02-009B POINT SOURCE EVAPORATION, SURFACE COATING
SOLVENT, BUTYL ACETATE
DATA CONFIDENCE LEVEL: II

CONTROL DEVICE: NONE
PROCESS MODIFICATION: NONE
KVB PROFILE KEY 0288

LINE NO.	SAROAD CODE	CHEMICAL NAME	MOLECULAR WEIGHT	PERCENT WEIGHT	PERCENT VOLUME	CHEMICAL CLASSIFICATION
1	43435	N-BUTYL ACETATE	116.16	100.00	100.00	5 MISCELLANEOUS
		TOTAL		100.00	100.00	
	0	COMPOUNDS OF CLASSIFICATION 1	.00	.00	.00	
	0	COMPOUNDS OF CLASSIFICATION 2	.00	.00	.00	
	0	COMPOUNDS OF CLASSIFICATION 3	.00	.00	.00	
	0	COMPOUNDS OF CLASSIFICATION 4	.00	.00	.00	
	1	COMPOUNDS OF CLASSIFICATION 5	116.16	100.00	100.00	
	0	COMPOUNDS OF CLASSIFICATION 6	.00	.00	.00	
	0	COMPOUNDS OF CLASSIFICATION 7	.00	.00	.00	
	1	COMPOUND COMPOSITE	116.16	100.00	100.00	

NOTES: A. METHOD: CALCULATIONS FROM COMPOSITE SURVEY DATA INSPECTION OF SOLVENT FORMULATION
B. REFERENCES: ENGINEERING JUDGEMENT
C. APPLICABLE SCC CATEGORIES: 4-02-009-03

DECEMBER 14, 1978 TABLE 4-02-009C POINT SOURCE EVAPORATION, SURFACE COATING
SOLVENT, BUTYL ALCOHOL
DATA CONFIDENCE LEVEL: II

CONTROL DEVICE: NONE
PROCESS MODIFICATION: NONE
KVB PROFILE KEY 0289

LINE NO.	SAROAD CODE	CHEMICAL NAME	MOLECULAR WEIGHT	PERCENT WEIGHT	PERCENT VOLUME	CHEMICAL CLASSIFICATION
1	43305	N-BUTYL ALCOHOL	74.12	100.00	100.00	5 MISCELLANEOUS
		TOTAL		100.00	100.00	
	0	COMPOUNDS OF CLASSIFICATION 1	.00	.00	.00	
	0	COMPOUNDS OF CLASSIFICATION 2	.00	.00	.00	
	0	COMPOUNDS OF CLASSIFICATION 3	.00	.00	.00	
	0	COMPOUNDS OF CLASSIFICATION 4	.00	00	.00	
	1	COMPOUNDS OF CLASSIFICATION 5	74.12	100.00	100.00	
	0	COMPOUNDS OF CLASSIFICATION 6	.00	.00	.00	
	0	COMPOUNDS OF CLASSIFICATION 7	.00	.00	.00	
	1	COMPOUND COMPOSITE	74.12	100.00	100.00	

NOTES: A. METHOD: CALCULATIONS FROM COMPOSITE SURVEY DATA INSPECTION OF SOLVENT FORMULATION
B. REFERENCES: ENGINEERING JUDGEMENT
C. APPLICABLE SCC CATEGORIES: 4-02-009-04

DECEMBER 14, 1978 TABLE 4-02-009D POINT SOURCE EVAPORATION, SURFACE COATING
SOLVENT, CELLOSOLVE
DATA CONFIDENCE LEVEL: II

CONTROL DEVICE: NONE
PROCESS MODIFICATION: NONE
KVB PROFILE KEY 0290

LINE NO.	SAROAD CODE	CHEMICAL NAME	MOLECULAR WEIGHT	PERCENT WEIGHT	PERCENT VOLUME	CHEMICAL CLASSIFICATION
1	43311	CELLOSOLVE	90.12	100.00	100.00	5 MISCELLANEOUS
		TOTAL		100.00	100.00	
	0	COMPOUNDS OF CLASSIFICATION 1	.00	.00	.00	
	0	COMPOUNDS OF CLASSIFICATION 2	.00	.00	.00	
	0	COMPOUNDS OF CLASSIFICATION 3	.00	.00	.00	
	0	COMPOUNDS OF CLASSIFICATION 4	.00	.00	.00	
	1	COMPOUNDS OF CLASSIFICATION 5	90.12	100.00	100.00	
	0	COMPOUNDS OF CLASSIFICATION 6	.00	.00	.00	
	0	COMPOUNDS OF CLASSIFICATION 7	.00	.00	.00	
	1	COMPOUND COMPOSITE	90.12	100.00	100.00	

NOTES: A. METHOD: CALCULATIONS FROM COMPOSITE SURVEY DATA INSPECTION OF SOLVENT FORMULATION
B. REFERENCES: ENGINEERING JUDGEMENT
C. APPLICABLE SCC CATEGORIES: 4-02-009-06, 4-05-003-03

DECEMBER 14, 1978 TABLE 4-02-009E POINT SOURCE EVAPORATION, SURFACE COATING
SOLVENT, DIMETHYLFORMAMIDE
DATA CONFIDENCE LEVEL: II

CONTROL DEVICE: NONE
PROCESS MODIFICATION: NONE
KVB PROFILE KEY 0292

LINE NO.	SAROAD CODE	CHEMICAL NAME	MOLECULAR WEIGHT	PERCENT WEIGHT	PERCENT VOLUME	CHEMICAL CLASSIFICATION
1	43450	DIMETHYLFORMAMIDE	73.09	100.00	100.00	5 MISCELLANEOUS
		TOTAL		100.00	100.00	
	0	COMPOUNDS OF CLASSIFICATION 1	.00	.00	00	
	0	COMPOUNDS OF CLASSIFICATION 2	.00	.00	.00	
	0	COMPOUNDS OF CLASSIFICATION 3	.00	.00	.00	
	0	COMPOUNDS OF CLASSIFICATION 4	.00	.00	.00	
	1	COMPOUNDS OF CLASSIFICATION 5	73.09	100.00	100.00	
	0	COMPOUNDS OF CLASSIFICATION 6	.00	.00	.00	
	0	COMPOUNDS OF CLASSIFICATION 7	.00	.00	.00	
	1	COMPOUND COMPOSITE	73.09	100.00	100.00	

NOTES: A. METHOD: CALCULATIONS FROM COMPOSITE SURVEY DATA INSPECTION OF SOLVENT FORMULATION
B. REFERENCES: ENGINEERING JUDGEMENT
C. APPLICABLE SCC CATEGORIES: 4-02-009-08, 4-05-005-02

DECEMBER 14, 1978 TABLE 4-02-009F POINT SOURCE EVAPORATION, SURFACE COATING
SOLVENT, ETHYL ALCOHOL
DATA CONFIDENCE LEVEL: II

CONTROL DEVICE: NONE
PROCESS MODIFICATION: NONE
KVB PROFILE KEY 0226

LINE NO.	SAROAD CODE	CHEMICAL NAME	MOLECULAR WEIGHT	PERCENT WEIGHT	PERCENT VOLUME	CHEMICAL CLASSIFICATION
1	43302	ETHYL ALCOHOL	46.07	100.00	100.00	5 MISCELLANEOUS
		TOTAL		100.00	100.00	
	0	COMPOUNDS OF CLASSIFICATION 1	.00	.00	.00	
	0	COMPOUNDS OF CLASSIFICATION 2	.00	.00	.00	
	0	COMPOUNDS OF CLASSIFICATION 3	.00	.00	.00	
	0	COMPOUNDS OF CLASSIFICATION 4	.00	.00	.00	
	1	COMPOUNDS OF CLASSIFICATION 5	46.07	100.00	100.00	
	0	COMPOUNDS OF CLASSIFICATION 6	.00	.00	.00	
	0	COMPOUNDS OF CLASSIFICATION 7	.00	.00	.00	
	1	COMPOUND COMPOSITE	46.07	100.00	100.00	

NOTES: A. METHOD: CALCULATIONS FROM COMPOSITE SURVEY DATA INSPECTION OF SOLVENT FORMULATION
B. REFERENCES: ENGINEERING JUDGEMENT
C. APPLICABLE SCC CATEGORIES: 4-02-009-10, 4-05-003-04, 4-05-005-04

DECEMBER 14, 1978 TABLE 4-02-009G POINT SOURCE EVAPORATION, SURFACE COATING
SOLVENT, ISOPROPYL ALCOHOL
DATA CONFIDENCE LEVEL: II

CONTROL DEVICE: NONE
PROCESS MODIFICATION: NONE
KVB PROFILE KEY 0227

LINE NO.	SAROAD CODE	CHEMICAL NAME	MOLECULAR WEIGHT	PERCENT WEIGHT	PERCENT VOLUME	CHEMICAL CLASSIFICATION
1	43304	ISOPROPYL ALCOHOL	60.09	100.00	100.00	5 MISCELLANEOUS
		TOTAL		100.00	100.00	
	0	COMPOUNDS OF CLASSIFICATION 1	.00	.00	.00	
	0	COMPOUNDS OF CLASSIFICATION 2	00	.00	.00	
	0	COMPOUNDS OF CLASSIFICATION 3	.00	00	.00	
	0	COMPOUNDS OF CLASSIFICATION 4	.00	.00	.00	
	1	COMPOUNDS OF CLASSIFICATION 5	60.09	100.00	100.00	
	0	COMPOUNDS OF CLASSIFICATION 6	.00	.00	.00	
	0	COMPOUNDS OF CLASSIFICATION 7	.00	00	.00	
	1	COMPOUND COMPOSITE	60.09	100.00	100.00	

NOTES: A. METHOD: CALCULATIONS FROM COMPOSITE SURVEY DATA INSPECTION OF SOLVENT FORMULATION
B. REFERENCES: ENGINEERING JUDGEMENT
C. APPLICABLE SCC CATEGORIES: 4-02-009-12

DECEMBER 14, 1978 TABLE 4-02-009H POINT SOURCE EVAPORATION, SURFACE COATING
SOLVENT, ISOPROPYL ACETATE
DATA CONFIDENCE LEVEL: II

CONTROL DEVICE: NONE
PROCESS MODIFICATION: NONE
KVB PROFILE KEY 0228

LINE NO.	SAROAD CODE	CHEMICAL NAME	MOLECULAR WEIGHT	PERCENT WEIGHT	PERCENT VOLUME	CHEMICAL CLASSIFICATION
1	43444	ISOPROPYL ACETATE	104.00	100.00	100.00	5 MISCELLANEOUS
		TOTAL		100.00	100.00	
	0	COMPOUNDS OF CLASSIFICATION 1	.00	.00	.00	
	0	COMPOUNDS OF CLASSIFICATION 2	.00	.00	.00	
	0	COMPOUNDS OF CLASSIFICATION 3	.00	.00	.00	
	0	COMPOUNDS OF CLASSIFICATION 4	.00	.00	.00	
	1	COMPOUNDS OF CLASSIFICATION 5	104.00	100.00	100.00	
	0	COMPOUNDS OF CLASSIFICATION 6	.00	.00	.00	
	0	COMPOUNDS OF CLASSIFICATION 7	.00	.00	.00	
	1	COMPOUND COMPOSITE	104.00	100.00	100.00	

NOTES: A. METHOD: CALCULATIONS FROM COMPOSITE SURVEY DATA INSPECTION OF SOLVENT FORMULATION
B. REFERENCES: ENGINEERING JUDGEMENT
C. APPLICABLE SCC CATEGORIES: 4-02-009-13

DECEMBER 14, 1978 TABLE 4-02-009J POINT SOURCE EVAPORATION, SURFACE COATING
SOLVENT, LACTOL SPIRITS
DATA CONFIDENCE LEVEL: II

CONTROL DEVICE: NONE
PROCESS MODIFICATION: NONE
KVB PROFILE KEY 0229

LINE NO.	SAROAD CODE	CHEMICAL NAME	MOLECULAR WEIGHT	PERCENT WEIGHT	PERCENT VOLUME	CHEMICAL CLASSIFICATION
1	43119	LACTOL SPIRITS	114.00	100.00	100.00	5 MISCELLANEOUS
		TOTAL		100.00	100.00	
	0	COMPOUNDS OF CLASSIFICATION 1	.00	.00	.00	
	0	COMPOUNDS OF CLASSIFICATION 2	.00	.00	.00	
	0	COMPOUNDS OF CLASSIFICATION 3	.00	.00	.00	
	0	COMPOUNDS OF CLASSIFICATION 4	.00	.00	.00	
	1	COMPOUNDS OF CLASSIFICATION 5	114.00	100.00	100.00	
	0	COMPOUNDS OF CLASSIFICATION 6	.00	.00	.00	
	0	COMPOUNDS OF CLASSIFICATION 7	.00	.00	.00	
	1	COMPOUND COMPOSITE	114.00	100.00	100.00	

NOTES: A. METHOD: CALCULATIONS FROM COMPOSITE SURVEY DATA INSPECTION OF SOLVENT FORMULATION
B. REFERENCES: ENGINEERING JUDGEMENT
C. APPLICABLE SCC CATEGORIES: 4-02-009-15

DECEMBER 14, 1978 TABLE 4-02-009K POINT SOURCE EVAPORATION, SURFACE COATING
SOLVENT, METHYL ALCOHOL
DATA CONFIDENCE LEVEL. II

CONTROL DEVICE: NONE
PROCESS MODIFICATION: NONE
KVB PROFILE KEY 0291

LINE NO.	SAROAD CODE	CHEMICAL NAME	MOLECULAR WEIGHT	PERCENT WEIGHT	PERCENT VOLUME	CHEMICAL CLASSIFICATION
1	43301	METHYL ALCOHOL	32.04	100.00	100.00	5 MISCELLANEOUS
		TOTAL		100.00	100.00	
	0	COMPOUNDS OF CLASSIFICATION 1	.00	00	.00	
	0	COMPOUNDS OF CLASSIFICATION 2	.00	00	.00	
	0	COMPOUNDS OF CLASSIFICATION 3	.00	.00	.00	
	0	COMPOUNDS OF CLASSIFICATION 4	.00	00	.00	
	1	COMPOUNDS OF CLASSIFICATION 5	32.04	100.00	100.00	
	0	COMPOUNDS OF CLASSIFICATION 6	.00	00	.00	
	0	COMPOUNDS OF CLASSIFICATION 7	.00	.00	.00	
	1	COMPOUND COMPOSITE	32.04	100.00	100.00	

NOTES: A. METHOD: CALCULATIONS FROM COMPOSITE SURVEY DATA INSPECTION OF SOLVENT FORMULATION
B. REFERENCES: ENGINEERING JUDGEMENT
C. APPLICABLE SCC CATEGORIES: 4-02-009-17

REFERENCES

1. Danielson, J. A., (ed.), "Air Pollution Engineering Manual," Environmental Protection Agency, Research Triangle Park, NC, AP-40, May 1973.

2. Taback, H. J., et al., "Control of Hydrocarbon Emissions from Stationary Sources in the California South Coast Air Basin," Vol. I and II, KVB, Inc., Tustin, CA, June 1978.

3. Lunche, R. G., et al., "Products Emitting Organic Vapors in Los Angeles County," Chemical Engineering Progress, Vol. 53, No. 8, August 1957.

4-03 POINT SOURCE EVAPORATION, PETROLEUM PRODUCT STORAGE

4-03-001 FIXED ROOF TANKS--GASOLINE
--CRUDE OIL
--MISC. PETROLEUM PRODUCTS
--LIQUIFIED PETROLEUM GAS

Process Description[1]

Basically, the petroleum industry consists of three operations:

1. Petroleum production and transportation
2. Petroleum refining
3. Transportation and marketing of finished petroleum products

All three operations require some basic storage for petroleum liquids, and these storage tanks, for both the crude and finished products, can be significant sources of evaporative emissions.

Four basic tank designs are used for petroleum storage vessels: fixed roof, floating roof, variable vapor space, and pressurized tanks. For more detailed descriptions of these tank designs, consult References 1 and 2.

Emissions and Controls[1,4]

There are six sources of emissions from petroleum liquids in storage: fixed roof breathing losses, fixed roof working losses, floating roof storage losses, floating roof withdrawal losses, variable vapor space filling losses, and pressure tank losses (Ref. 4).

Fixed Roof Tanks--Fixed roof breathing losses consist of vapor expelled from a tank because of the thermal expansion of existing vapors, vapor expansion caused by barometric pressure changes, and/or an increase in the amount of vapor due to added vaporization in the absence of a liquid-level change.

Fixed roof working losses consist of vapor expelled from a tank as a result of filling and emptying operations. Filling loss is the result of vapor displacement by the input of liquid. Emptying loss is the expulsion of vapors subsequent to product withdrawal, and is attributable to vapor growth as the newly inhaled air is saturated with hydrocarbons.

The method most commonly used to control emissions from fixed roof tanks is a vapor recovery system that collects emissions from the storage vessels and converts them to liquid product. Often a natural gas blanket is introduced to prevent excessive tank breathing. The expulsion of vapors through a gauge hatch will often consist of the VOC's from the gas blanket. To recover vapor, one or a combination of four methods may be used: vapor/liquid absorption, vapor compression, vapor cooling, and vapor/solid adsorption. Overall control efficiencies of vapor recovery systems vary from 90% to 95% depending on the method used, the design of the unit, the composition of vapors recovered, and the mechanical condition of the system.

Emissions from fixed roof tanks can also be controlled by the addition of an internal floating cover or covered floating roof to the existing fixed roof tank. API reports that this can result in an average loss reduction of 90% of the total evaporation loss sustained from a fixed roof tank.

Evaporative emissions can be minimized by reducing tank heat input with water sprays, mechanical cooling, underground storage, tank insulation, and optimum scheduling of tank turnovers.

Floating Roof Tanks--Floating roof standing storage losses result from causes other than breathing or changes in liquid level. The largest potential source of this loss is due to an improper fit of the seal and the roof.

Floating roof withdrawal losses result from evaporation of stock which wets the tank wall as the roof descends during emptying operations. This loss is small in comparison to other types of losses.

Evaporative emissions from floating roof tanks can be minimized by reducing tank heat input and by maximizing maintenance on the tank seals.

Variable Vapor Space Tanks--Variable vapor space filling losses result when vapor is displaced by the liquid input during filling operations. Since the variable vapor space tank has an expandable vapor storage capability, this loss is not as large as the filling loss associated with fixed roof tanks. Loss of vapor occurs only when the vapor storage capacity of the tank is exceeded.

Pressure tank losses occur when the pressure inside the tank exceeds the design pressure of the tank, which results in relief vent opening. This happens only when the tank is filled improperly, or when abnormal vapor expansion occurs. These are not regularly occurring events, and pressure tanks are not a significant source of loss under normal operating conditions.

The total amount of evaporation loss from storage tanks depends upon the rate of loss and the period of time involved. Factors affecting the rate of loss include:

1. True vapor pressure of the liquid stored
2. Temperature changes in the tank
3. Height of the vapor space (tank outage)
4. Tank diameter
5. Schedule of tank filling and emptying
6. Mechanical condition of tank and seals
7. Type of tank and type of paint applied to outer surface

Evaporative emissions from variable vapor space tanks are negligible and can be minimized by optimum scheduling of tank turnovers and by reducing tank heat input. Vapor recovery systems can be used with variable vapor space systems to collect and recover filling losses.

Vapor recovery systems capture hydrocarbon vapors displaced during filling operations and recover the hydrocarbon vapors by the use of refrigeration, absorption, adsorption, and/or compression. Control efficiencies range from 90% to 98%, depending on the nature of the vapors and the recovery equipment used.

Pressure Tanks--Pressure tanks incur vapor losses when excessive internal pressures result in relief valve venting. In some pressure tanks vapor venting is a design characteristic, and the vented vapors must be routed to a vapor recovery system. However, for most pressure tanks vapor venting is not a normal occurrence, and the tanks can be considered closed systems. Fugitive losses are also associated with pressure tanks and their equipment, but with proper system maintenance they are insignificant. Correlations do not exist for estimating vapor losses from pressure tanks.

Emission Factors

AP-42 may be used to calculate emissions from petroleum storage tanks. Many studies have been undertaken recently to better understand tank emissions. Revision of current emission factors is being considered by the EPA.

Profile Basis

Approximately 45% of the crude oil refined in the California South Coast Air Basin is produced lcoally. The balance comes from several sources including domestic and foreign suppliers. There exist significant differences in VOC speciation between the crude oils stored in production and refining in the Basin and that involved in marketing operations. The following discussion is therefore divided into the three general areas of production, marketing, and refinery operations.

Production Operations - Results from the current inventory (Ref. 3) show that the organic compound emissions from crude oil storage for petroleum production operations account for 35 tons per day or approximately 5% of all manmade sources. The emission profiles for the vapors released from these sources were developed using data from the field tests conducted on the program (Ref. 3) and the results of a recently completed study on fixed roof tank emissions sponsored by the Western Oil and Gas Association (WOGA) (Ref. 6).

A summary of the data used to determine this profile is included in Table 4-03D. Since data from Reference 6 did not identify "normal" and "isomer" compounds, the organic compounds for these tests have been identified as "normal". The layout of this table is similar to the following tables with the identification of the crude oils across the top and the organic compounds listed vertically. The numbers in each column represent the weight percent of that specie in the associated crude oil vapors.

As seen in Table 4-03D, there was a wide variation in the organic constituents of the crude oil vapors within the study area. The composite emission profile was developed using the weighting factor listed with each crude oil which represents roughly the fraction of the total crude oil produced by refineries within the Basin according to the California Division of Oil and Gas (Ref. 10).

Table 4-03-001C is a detailed profile specie table which is a composite of crude oil storage for petroleum production operations. This composite profile was developed from Table 4-03D and as discussed above.

Refining Operations - A similar procedure was used to develop an emission profile for crude oil storage associated with refining operations. A summary of the data used to calculate a composite profile is included in Table 4-03E. The crude oil stored in refineries showed a much larger variation in vapor compositions reflecting the diverse origins in the crude oil.

Data in Table 4-03E represents vapors collected from both fixed and floating roof tanks. However, insufficient data were available to allow a differentiation between vapors emitted from each tank type. Regulations by the California South Coast Air Quality Management District (SCAQMD) require storage of petroleum liquids with a vapor pressure greater than 1.5 psia in floating roof tanks. Therefore, it would seem reasonable to assume that differences between the vapor composition for crude oils above and below this limit would exist.

Table 4-03-001D is a detailed profile specie table that is a composite of crude oil storage for petroleum refining operations. This profile was developed from Table 4-03E and as discussed above.

Crude Oil Storage and Transfer Operations - Table 4-03F presents the data employed to determine a composite emission profile for crude oil storage and transfer operations primarily at marine terminals. Because significant variations in the crude oil vapors were observed between the various samples analyzed by KVB (Ref. 3), these test data were not used for this profile. The data shown were taken from the WOGA Fixed Roof Tank Study (Ref. 6).

Table 4-06-002 is a detailed profile specie table that is a composite of crude oil storage and transfer operations at marine terminals. The remainder of the profiles following this section are self-explanatory and may be used as indicated in the profile titles or by their applicable SCC categories.

TABLE 4-03D. CRUDE OIL STORAGE, PETROLEUM PRODUCTION OPERATIONS

	Production Field										
	† Huntington Beach	† Saticoy	§ Rosecrans	§ Wilmington	§ Seal Beach	§ Ventura	§ Santa Fe Springs	§ Brea Olinda	§ South Mountain	§ Ojai	Composite
Fraction of Production	0.13	0.01	0.10	0.45	0.05	0.12	0.02	0.08	0.05	0.01	1.0
Organic Compound (wt. %)											
Methane	3.0	7.1	1.0	10.8	2.0	1.2	5.3	1.4	7.9	0.2	6.2
Ethane	6.7	17.6	1.9	6.7	1.9	2.6	15.4	2.0	9.2	2.1	5.6
Propane	20.2	30.8	12.6	18.1	12.5	19.6	19.7	9.5	25.5	8.4	17.6
N-Butane	19.9	19.5	24.7	27.4	25.6	34.5	26.2	30.7	26.5	30.9	27.1
I-Butane	11.0	9.9									1.5
N-Pentane	8.0	5.1	19.3	13.1	30.7	14.7	13.0	23.5	10.5	25.6	14.6
I-Pentane	11.1	5.8									1.5
Hexane	5.0	2.1	12.9	6.8	12.3	9.4	5.8	11.3	5.8	11.3	7.9
I-Hexane	0.8										--
Heptane			17.2	9.3	9.2	10.7	6.2	13.7	7.5	11.8	9.2
Octane*			10.4	7.8	5.8	7.3	8.4	7.9	7.1	9.7	6.9
C-7 Cycloparaffins	9.9	0.6									1.3
C-8 Cycloparaffins	3.5										0.5
Benzene	1.0	0.1									0.1
Cyclohexane											--
3-Methyl Pentane		1.4									--
	100.0	100.0	100.0	100.0	100.0	100.0	100.0	100.0	100.0	100.0	100.0

* C_8 +

† Tests conducted during the current project

§ Ref. 6

TABLE 4-03E. CRUDE OIL STORAGE, PETROLEUM REFINING OPERATIONS

Organic Compound (wt. %)	Crude Sources					
	Foreign*	Domestic*	Domestic*	Domestic*	Unknown†	Composite
Methane	5.3	9.0	0.1	2.7	26.8	8.8
Ethane	4.5	6.0	2.1		0.9	2.7
Propane	17.1	26.0	20.6	7.3	9.7	16.1
N-Butane	18.6	26.0	22.7	15.4	21.7	20.8
I-Butane	10.7	11.0	15.5	9.5		9.3
N-Pentane	15.0	8.0	8.0		19.4	10.1
I-Pentane	13.4	8.0	12.3	22.2		11.2
Hexane	7.3	3.0	0.2		12.8	4.7
I-Hexane	5.2	2.0	1.0	17.1		5.1
Heptane	0.9		0.2		8.7	2.0
I-Heptane	2.0	1.0	8.1	14.0		5.0
I-Octane			1.9			0.4
Benzene			4.3	7.9		2.4
Toluene			3.0	3.9		1.4
	100.0	100.0	100.0	100.0	100.0	100.0

* Tests conducted for the program

† Ref. 6

TABLE 4-03F. CRUDE OIL STORAGE, PETROLEUM MARKETING OPERATIONS

Organic Compound (wt. %)	Crude Source			
	Foreign	Foreign	Domestic	Composite
Methane	6.0	0.4	1.5	2.6
Ethane	8.1	1.1	2.0	3.7
Propane	15.0	19.3	13.0	15.8
Butane	31.1	33.7	25.7	30.2
Pentane	12.8	22.7	20.1	18.5
Hexane	7.4	9.7	9.3	8.8
Heptane	8.8	8.5	15.0	10.8
Octane +	10.8	4.6	13.4	9.6
	100.0	100.0	100.0	100.0

Ref. 6

Data Qualifications

The following profiles may be used to characterize the organic emissions from typical petroleum product storage. Because of the variety of crude oil or petroleum product specifications, some VOC species will differ from region to region.

DECEMBER 14, 1978 TABLE 4-03-001A POINT SOURCE EVAPORATION, PETROLEUM PRODUCT STORAGE
FIXED ROOF, GASOLINE COMPOSITE, WORKING AND BREATHING LOSSES COMP
DATA CONFIDENCE LEVEL: III

CONTROL DEVICE: NONE
PROCESS MODIFICATION: NONE
KVB PROFILE KEY 0098

LINE NO.	SAROAD CODE	CHEMICAL NAME	MOLECULAR WEIGHT	PERCENT WEIGHT	PERCENT VOLUME	CHEMICAL CLASSIFICATION	
1	43204	PROPANE	44.09	.10	.19	1	PARAFFIN
2	43212	N-BUTANE	58.12	2.20	3.59	1	PARAFFIN
3	43214	ISOBUTANE	58.12	.50	.85	1	PARAFFIN
4	43220	N-PENTANE	72.15	12.20	15.96	1	PARAFFIN
5	43231	N-HEXANE	86.17	16.30	17.85	1	PARAFFIN
6	43232	N-HEPTANE	100.20	9.30	8.78	1	PARAFFIN
7	43233	N-OCTANE	114.23	10.10	8.31	1	PARAFFIN
8	43235	N-NONANE	128.25	1.80	1.32	1	PARAFFIN
9	43238	N-DECANE	142.28	2.60	1.70	1	PARAFFIN
10	43213	BUTENE	56.10	40	.66	2	OLEFIN
11	43224	1-PENTENE	70.13	2.50	3.40	2	OLEFIN
12	45102	ISOMERS OF XYLENE	106.16	13.50	11.99	3	AROMATIC
13	45104	ISOMERS OF ETHYLTOLUENE	120.19	6.50	5.10	3	AROMATIC
14	45105	ISOMERS OF BUTYLBENZENE	134.21	4.40	3.12	3	AROMATIC
15	45107	ISOMERS OF TRIMETHYLBENZENE	120.19	5.50	4.34	3	AROMATIC
16	45202	TOLUENE	92.13	9.70	9.92	3	AROMATIC
17	45201	BENZENE	78.11	2.40	2.93	7	NON-REACTIVE
		TOTAL		100.00	100.01		
	9	COMPOUNDS OF CLASSIFICATION 1	88.75	55.10	58.55		
	2	COMPOUNDS OF CLASSIFICATION 2	67.85	2.90	4.06		
	5	COMPOUNDS OF CLASSIFICATION 3	108.50	39.60	34.47		
	0	COMPOUNDS OF CLASSIFICATION 4	.00	.00	.00		
	0	COMPOUNDS OF CLASSIFICATION 5	.00	.00	.00		
	0	COMPOUNDS OF CLASSIFICATION 6	.00	00	.00		
	1	COMPOUNDS OF CLASSIFICATION 7	78.11	2.40	2.93		
	17	COMPOUND COMPOSITE	94.40	100.00	100.01		

NOTES: A. METHOD: CALCULATIONS FROM COMPOSITE SURVEY DATA ENGINEERING EVALUATION OF LITERATURE DATA
B. REFERENCES: LITERATURE DATA (REF. 3)
C. APPLICABLE SCC CATEGORIES: 4-03-001-01,-03 (REFER ALSO TO SUMMARY INDEX)

DECEMBER 14, 1978 TABLE 4-03-001B

POINT SOURCE EVAPORATION, PETROLEUM PRODUCT STORAGE
FIXED ROOF, GASOLINE BREATHING, FCC UNIT AND REFORMER BLEND
DATA CONFIDENCE LEVEL: III

CONTROL DEVICE: NONE
PROCESS MODIFICATION: NONE
KVB PROFILE KEY 0187

LINE NO.	SAROAD CODE	CHEMICAL NAME	MOLECULAR WEIGHT	PERCENT WEIGHT	PERCENT VOLUME	CHEMICAL CLASSIFICATION	
1	43105	ISOMERS OF HEXANE	86.17	5.20	4.12	1	PARAFFIN
2	43106	ISOMERS OF HEPTANE	100.20	18.40	12.63	1	PARAFFIN
3	43122	ISOMERS OF PENTANE	72.15	3.20	3.02	1	PARAFFIN
4	43212	N-BUTANE	58.12	58.30	68.84	1	PARAFFIN
5	43214	ISOBUTANE	58.12	.30	.34	1	PARAFFIN
6	43220	N-PENTANE	72.15	1.50	1.44	1	PARAFFIN
7	43231	N-HEXANE	86.17	4.60	3.64	1	PARAFFIN
8	43232	N-HEPTANE	100.20	2.70	1.85	1	PARAFFIN
9	45102	ISOMERS OF XYLENE	106.16	1.90	1.24	3	AROMATIC
10	45202	TOLUENE	92.13	3.90	2.88	3	AROMATIC
		TOTAL		100.00	100.00		
	8	COMPOUNDS OF CLASSIFICATION 1	67.40	94.20	95.88		
	0	COMPOUNDS OF CLASSIFICATION 2	.00	.00	.00		
	2	COMPOUNDS OF CLASSIFICATION 3	96.35	5.80	4.12		
	0	COMPOUNDS OF CLASSIFICATION 4	.00	.00	.00		
	0	COMPOUNDS OF CLASSIFICATION 5	.00	.00	.00		
	0	COMPOUNDS OF CLASSIFICATION 6	.00	.00	.00		
	0	COMPOUNDS OF CLASSIFICATION 7	.00	.00	.00		
	10	COMPOUND COMPOSITE	68.59	100.00	100.00		

NOTES:
A. METHOD: CALCULATIONS FROM COMPOSITE SURVEY DATA GC-MS ANALYSIS OF GRAB SAMPLE TAKEN FROM ROOF HATCH
B. REFERENCES: KVB TEST DATA (REF. 3)
C. APPLICABLE SCC CATEGORIES: 4-03-001-01 (REFER ALSO TO SUMMARY INDEX)

DECEMBER 14, 1978 TABLE 4-03-001C POINT SOURCE EVAPORATION, PETROLEUM PRODUCT STORAGE, PRODUCTION
FIXED ROOF, COMPOSITE PROFILE FOR CRUDE OIL
DATA CONFIDENCE LEVEL: III

CONTROL DEVICE: NONE
PROCESS MODIFICATION: NONE
KVB PROFILE KEY 0296

LINE NO.	SAROAD CODE	CHEMICAL NAME	MOLECULAR WEIGHT	PERCENT WEIGHT	PERCENT VOLUME	CHEMICAL CLASSIFICATION	
1	43115	C-7 CYCLOPARAFFINS	98.19	1.30	.67	1	PARAFFIN
2	43116	C-8 CYCLOPARAFFINS	112.23	.50	.26	1	PARAFFIN
3	43122	ISOMERS OF PENTANE	72.15	1.50	1.08	1	PARAFFIN
4	43204	PROPANE	44.09	17.60	20.46	1	PARAFFIN
5	43212	N-BUTANE	58.12	27.10	23.90	1	PARAFFIN
6	43214	ISOBUTANE	58.12	1.50	1.33	1	PARAFFIN
7	43220	N-PENTANE	72.15	14.60	10.36	1	PARAFFIN
8	43231	N-HEXANE	86.17	7.90	4.72	1	PARAFFIN
9	43232	N-HEPTANE	100.20	9.20	4.72	1	PARAFFIN
10	43233	N-OCTANE	114.23	6.90	3.08	1	PARAFFIN
11	43201	METHANE	16.04	6.20	19.85	6	METHANE
12	43202	ETHANE	30.07	5.60	9.54	7	NON-REACTIVE
13	45201	BENZENE	78.11	.10	.05	7	NON-REACTIVE
		TOTAL		100.00	100.02		
	10	COMPOUNDS OF CLASSIFICATION 1	64.05	88.10	70.58		
	0	COMPOUNDS OF CLASSIFICATION 2	.00	.00	.00		
	0	COMPOUNDS OF CLASSIFICATION 3	.00	.00	.00		
	0	COMPOUNDS OF CLASSIFICATION 4	.00	.00	.00		
	0	COMPOUNDS OF CLASSIFICATION 5	.00	.00	.00		
	1	COMPOUNDS OF CLASSIFICATION 6	16.04	6.20	19.85		
	2	COMPOUNDS OF CLASSIFICATION 7	30.32	5.70	9.59		
	13	COMPOUND COMPOSITE	51.28	100.00	100.02		

NOTES: A. METHOD: CALCULATIONS FROM COMPOSITE SURVEY DATA GC-MS ANALYSIS OF GRAB SAMPLE
B. REFERENCES: KVB TEST DATA (REF. 3), LITERATURE TEST DATA (REF. 6)
C. APPLICABLE SCC CATEGORIES: 4-03-001-02,-04

DECEMBER 14, 1978 TABLE 4-03-001D POINT SOURCE EVAPORATION, PETROLEUM PRODUCT STORAGE, REFINERY
FIXED ROOF, COMPOSITE PROFILE FOR CRUDE OIL
DATA CONFIDENCE LEVEL: III

CONTROL DEVICE: NONE
PROCESS MODIFICATION: NONE
KVB PROFILE KEY 0297

LINE NO.	SAROAD CODE	CHEMICAL NAME	MOLECULAR WEIGHT	PERCENT WEIGHT	PERCENT VOLUME	CHEMICAL CLASSIFICATION	
1	43105	ISOMERS OF HEXANE	86.17	5.10	2.88	1	PARAFFIN
2	43106	ISOMERS OF HEPTANE	100.20	5.00	2.44	1	PARAFFIN
3	43107	ISOMERS OF OCTANE	114.23	40	.20	1	PARAFFIN
4	43122	ISOMERS OF PENTANE	72.15	11.20	7.56	1	PARAFFIN
5	43204	PROPANE	44.09	16.10	17.80	1	PARAFFIN
6	43212	N-BUTANE	58.12	20.80	17.45	1	PARAFFIN
7	43214	ISOBUTANE	58.12	9.30	7.80	1	PARAFFIN
8	43220	N-PENTANE	72.15	10.10	6.83	1	PARAFFIN
9	43231	N-HEXANE	86.17	4.70	2.68	1	PARAFFIN
10	43232	N-HEPTANE	100.20	2.00	.98	1	PARAFFIN
11	45202	TOLUENE	92.13	1.40	73	3	AROMATIC
12	43201	METHANE	16.04	8.80	26.77	6	METHANE
13	43202	ETHANE	30.07	2.70	4.39	7	NON-REACTIVE
14	45201	BENZENE	78.11	2.40	1.51	7	NON-REACTIVE
		TOTAL		100.00	100.02		
	10	COMPOUNDS OF CLASSIFICATION 1	62.07	84.70	66.62		
	0	COMPOUNDS OF CLASSIFICATION 2	.00	.00	.00		
	1	COMPOUNDS OF CLASSIFICATION 3	92.13	1.40	.73		
	0	COMPOUNDS OF CLASSIFICATION 4	.00	.00	.00		
	0	COMPOUNDS OF CLASSIFICATION 5	.00	.00	.00		
	1	COMPOUNDS OF CLASSIFICATION 6	16.04	8.80	26.77		
	2	COMPOUNDS OF CLASSIFICATION 7	42.37	5.10	5.90		
	14	COMPOUND COMPOSITE	48.81	100.00	100.02		

NOTES:
A. METHOD: CALCULATIONS FROM COMPOSITE SURVEY DATA GC-MS ANALYSIS OF GRAB SAMPLES
B. REFERENCES: KVB TEST DATA (REF 3), LITERATURE TEST DATA (REF. 6)
C. APPLICABLE SCC CATEGORIES: 4-03-001-02,-04, 4-03-002-03,-04

DECEMBER 14, 1978 TABLE 4-03-001E POINT SOURCE EVAPORATION, PETROLEUM PRODUCT STORAGE
FIXED ROOF, COMMERCIAL JET FUEL (JET-A)
DATA CONFIDENCE LEVEL: III

CONTROL DEVICE: NONE
PROCESS MODIFICATION: NONE
KVB PROFILE KEY 0100

LINE NO.	SAROAD CODE	CHEMICAL NAME	MOLECULAR WEIGHT	PERCENT WEIGHT	PERCENT VOLUME	CHEMICAL CLASSIFICATION	
1	43232	N-HEPTANE	100.20	.10	.17	1	PARAFFIN
2	43233	N-OCTANE	114.23	.50	.66	1	PARAFFIN
3	43235	N-NONANE	128.25	4.70	6.11	1	PARAFFIN
4	43238	N-DECANE	142.28	19.60	22.77	1	PARAFFIN
5	43241	N-UNDECANE	156.30	20.30	21.45	1	PARAFFIN
6	43255	N-DODECANE	170.33	18.20	17.66	1	PARAFFIN
7	43258	N-TRIDECANE	184.36	17.70	15.84	1	PARAFFIN
8	43259	N-TETRADECANE	198.38	11.70	9.74	1	PARAFFIN
9	43260	N-PENTADECANE	212.41	7.20	5.61	1	PARAFFIN
		TOTAL		100.00	100.01		
	9	COMPOUNDS OF CLASSIFICATION 1	165.19	100.00	100.01		
	0	COMPOUNDS OF CLASSIFICATION 2	.00	.00	.00		
	0	COMPOUNDS OF CLASSIFICATION 3	.00	.00	.00		
	0	COMPOUNDS OF CLASSIFICATION 4	.00	.00	.00		
	0	COMPOUNDS OF CLASSIFICATION 5	.00	.00	.00		
	0	COMPOUNDS OF CLASSIFICATION 6	.00	.00	.00		
	0	COMPOUNDS OF CLASSIFICATION 7	.00	.00	.00		
	9	COMPOUND COMPOSITE	165.19	100.00	100.01		

NOTES: A. METHOD: CALCULATIONS FROM COMPOSITE SURVEY DATA ENGINEERING EVALUATION OF LITERATURE DATA
B. REFERENCES: LITERATURE DATA (REF. 11)
C. APPLICABLE SCC CATEGORIES: 4-03-001-05,-50, 4-03-002-05, 4-03-003-03

DECEMBER 14, 1978 TABLE 4-03-001F POINT SOURCE EVAPORATION, PETROLEUM PRODUCT STORAGE
FIXED ROOF, BENZENE
DATA CONFIDENCE LEVEL: II

CONTROL DEVICE: NONE
PROCESS MODIFICATION: NONE
KVB PROFILE KEY 0298

LINE NO.	SAROAD CODE	CHEMICAL NAME	MOLECULAR WEIGHT	PERCENT WEIGHT	PERCENT VOLUME	CHEMICAL CLASSIFICATION
1	45201	BENZENE	78.11	100.00	100.00	7 NON-REACTIVE
		TOTAL		100.00	100.00	
	0	COMPOUNDS OF CLASSIFICATION 1	.00	.00	.00	
	0	COMPOUNDS OF CLASSIFICATION 2	.00	.00	.00	
	0	COMPOUNDS OF CLASSIFICATION 3	.00	.00	.00	
	0	COMPOUNDS OF CLASSIFICATION 4	.00	.00	.00	
	0	COMPOUNDS OF CLASSIFICATION 5	.00	.00	.00	
	0	COMPOUNDS OF CLASSIFICATION 6	.00	.00	.00	
	1	COMPOUNDS OF CLASSIFICATION 7	78.11	100.00	100.00	
	1	COMPOUND COMPOSITE	78.11	100.00	100.00	

NOTES: A. METHOD: CALCULATIONS FROM COMPOSITE SURVEY DATA INSPECTION OF STORED PRODUCT FORMULATION
B. REFERENCES: ENGINEERING JUDGEMENT
C. APPLICABLE SCC CATEGORIES: 4-03-001-08,-53, 4-03-002-08, 4-03-003-06

DECEMBER 14, 1978 TABLE 4-03-001G POINT SOURCE EVAPORATION, PETROLEUM PRODUCT STORAGE
FIXED ROOF, CYCLOHEXANE
DATA CONFIDENCE LEVEL: II

CONTROL DEVICE: NONE
PROCESS MODIFICATION: NONE
KVB PROFILE KEY 0299

LINE NO.	SAROAD CODE	CHEMICAL NAME	MOLECULAR WEIGHT	PERCENT WEIGHT	PERCENT VOLUME	CHEMICAL CLASSIFICATION
1	43248	CYCLOHEXANE	84.16	100.00	100.00	1 PARAFFIN
		TOTAL		100.00	100.00	
	1	COMPOUNDS OF CLASSIFICATION 1	84.16	100.00	100.00	
	0	COMPOUNDS OF CLASSIFICATION 2	.00	.00	.00	
	0	COMPOUNDS OF CLASSIFICATION 3	.00	.00	.00	
	0	COMPOUNDS OF CLASSIFICATION 4	.00	.00	.00	
	0	COMPOUNDS OF CLASSIFICATION 5	.00	.00	.00	
	0	COMPOUNDS OF CLASSIFICATION 6	.00	.00	.00	
	0	COMPOUNDS OF CLASSIFICATION 7	.00	.00	.00	
	1	COMPOUND COMPOSITE	84.16	100.00	100.00	

NOTES: A. METHOD: CALCULATIONS FROM COMPOSITE SURVEY DATA INSPECTION OF STORED PRODUCT FORMULATION
B. REFERENCES: ENGINEERING JUDGEMENT
C. APPLICABLE SCC CATEGORIES: 4-03-001-09,-54, 4-03-002-09, 4-03-003-07

DECEMBER 14, 1978 TABLE 4-03-001H POINT SOURCE EVAPORATION, PETROLEUM PRODUCT STORAGE
FIXED ROOF, CYCLOPENTANE
DATA CONFIDENCE LEVEL: II

CONTROL DEVICE: NONE
PROCESS MODIFICATION: NONE
KVB PROFILE KEY 0300

LINE NO.	SAROAD CODE	CHEMICAL NAME	MOLECULAR WEIGHT	PERCENT WEIGHT	PERCENT VOLUME	CHEMICAL CLASSIFICATION
1	43242	CYCLOPENTANE	70.14	100.00	100.00	1 PARAFFIN
		TOTAL		100.00	100.00	
	1	COMPOUNDS OF CLASSIFICATION 1	70.14	100.00	100.00	
	0	COMPOUNDS OF CLASSIFICATION 2	.00	.00	00	
	0	COMPOUNDS OF CLASSIFICATION 3	.00	.00	.00	
	0	COMPOUNDS OF CLASSIFICATION 4	.00	00	.00	
	0	COMPOUNDS OF CLASSIFICATION 5	.00	.00	.00	
	0	COMPOUNDS OF CLASSIFICATION 6	.00	.00	.00	
	0	COMPOUNDS OF CLASSIFICATION 7	.00	.00	.00	
	1	COMPOUND COMPOSITE	70.14	100.00	100.00	

NOTES: A. METHOD: CALCULATIONS FROM COMPOSITE SURVEY DATA INSPECTION OF STORED PRODUCT FORMULATION
B. REFERENCES: ENGINEERING JUDGEMENT
C. APPLICABLE SCC CATEGORIES: 4-03-001-10,-55, 4-03-002-10, 4-03-003-08

DECEMBER 14, 1978 TABLE 4-03-001J POINT SOURCE EVAPORATION, PETROLEUM PRODUCT STORAGE
FIXED ROOF, HEPTANE
DATA CONFIDENCE LEVEL: II

CONTROL DEVICE: NONE
PROCESS MODIFICATION: NONE
KVB PROFILE KEY 0301

LINE NO.	SAROAD CODE	CHEMICAL NAME	MOLECULAR WEIGHT	PERCENT WEIGHT	PERCENT VOLUME	CHEMICAL CLASSIFICATION
1	43232	N-HEPTANE	100.20	100.00	100.00	1 PARAFFIN
		TOTAL		100.00	100.00	
	1	COMPOUNDS OF CLASSIFICATION 1	100.20	100.00	100.00	
	0	COMPOUNDS OF CLASSIFICATION 2	.00	.00	.00	
	0	COMPOUNDS OF CLASSIFICATION 3	.00	.00	.00	
	0	COMPOUNDS OF CLASSIFICATION 4	.00	.00	.00	
	0	COMPOUNDS OF CLASSIFICATION 5	.00	.00	.00	
	0	COMPOUNDS OF CLASSIFICATION 6	.00	.00	.00	
	0	COMPOUNDS OF CLASSIFICATION 7	.00	.00	.00	
	1	COMPOUND COMPOSITE	100.20	100.00	100.00	

NOTES: A. METHOD: CALCULATIONS FROM COMPOSITE SURVEY DATA INSPECTION OF STORED PRODUCT FORMULATION
B. REFERENCES: ENGINEERING JUDGEMENT
C. APPLICABLE SCC CATEGORIES: 4-03-001-11,-56, 4-03-002-11, 4-03-003-09

DECEMBER 14, 1978 TABLE 4-03-001K POINT SOURCE EVAPORATION, PETROLEUM PRODUCTS STORAGE
FIXED ROOF, HEXANE
DATA CONFIDENCE LEVEL: II

CONTROL DEVICE: NONE
PROCESS MODIFICATION: NONE
KVB PROFILE KEY 0230

LINE NO.	SAROAD CODE	CHEMICAL NAME	MOLECULAR WEIGHT	PERCENT WEIGHT	PERCENT VOLUME	CHEMICAL CLASSIFICATION
1	43231	N-HEXANE	86.17	100.00	100.00	1 PARAFFIN
		TOTAL		100.00	100.00	
	1	COMPOUNDS OF CLASSIFICATION 1	86.17	100.00	100.00	
	0	COMPOUNDS OF CLASSIFICATION 2	.00	.00	.00	
	0	COMPOUNDS OF CLASSIFICATION 3	.00	.00	.00	
	0	COMPOUNDS OF CLASSIFICATION 4	.00	.00	.00	
	0	COMPOUNDS OF CLASSIFICATION 5	.00	.00	.00	
	0	COMPOUNDS OF CLASSIFICATION 6	.00	.00	.00	
	0	COMPOUNDS OF CLASSIFICATION 7	.00	.00	.00	
	1	COMPOUND COMPOSITE	86.17	100.00	100.00	

NOTES: A. METHOD: CALCULATIONS FROM COMPOSITE SURVEY DATA INSPECTION OF STORED PRODUCT FORMULATION
B. REFERENCES: ENGINEERING JUDGEMENT
C. APPLICABLE SCC CATEGORIES: 4-03-001-12,-57 4-03-002-12, 4-03-003-10

DECEMBER 14, 1978 TABLE 4-03-001L POINT SOURCE EVAPORATION, PETROLEUM PRODUCT STORAGE
FIXED ROOF, ISO-OCTANE
DATA CONFIDENCE LEVEL: II

CONTROL DEVICE: NONE
PROCESS MODIFICATION: NONE
KVB PROFILE KEY 0302

LINE NO.	SAROAD CODE	CHEMICAL NAME	MOLECULAR WEIGHT	PERCENT WEIGHT	PERCENT VOLUME	CHEMICAL CLASSIFICATION
1	43107	ISOMERS OF OCTANE	114.23	100.00	100.00	1 PARAFFIN
		TOTAL		100.00	100.00	
	1	COMPOUNDS OF CLASSIFICATION 1	114.23	100.00	100.00	
	0	COMPOUNDS OF CLASSIFICATION 2	.00	00	.00	
	0	COMPOUNDS OF CLASSIFICATION 3	.00	.00	.00	
	0	COMPOUNDS OF CLASSIFICATION 4	.00	.00	.00	
	0	COMPOUNDS OF CLASSIFICATION 5	.00	.00	.00	
	0	COMPOUNDS OF CLASSIFICATION 6	.00	.00	.00	
	0	COMPOUNDS OF CLASSIFICATION 7	.00	.00	.00	
	1	COMPOUND COMPOSITE	114.23	100.00	100.00	

NOTES: A. METHOD: CALCULATIONS FROM COMPOSITE SURVEY DATA INSPECTION OF STORED PRODUCT FORMULATION
B. REFERENCES: ENGINEERING JUDGEMENT
C. APPLICABLE SCC CATEGORIES: 4-03-001-13, -58, 4-03-002-13, 4-03-003-11

DECEMBER 14, 1978 TABLE 4-03-001M POINT SOURCE EVAPORATION, PETROLEUM PRODUCT STORAGE
FIXED ROOF, ISOPENTANE
DATA CONFIDENCE LEVEL: II

CONTROL DEVICE: NONE
PROCESS MODIFICATION: NONE
KVB PROFILE KEY 0231

LINE NO.	SAROAD CODE	CHEMICAL NAME	MOLECULAR WEIGHT	PERCENT WEIGHT	PERCENT VOLUME	CHEMICAL CLASSIFICATION
1	43122	ISOMERS OF PENTANE	72.15	100.00	100.00	1 PARAFFIN
		TOTAL		100.00	100.00	
	1	COMPOUNDS OF CLASSIFICATION 1	72.15	100.00	100.00	
	0	COMPOUNDS OF CLASSIFICATION 2	.00	.00	.00	
	0	COMPOUNDS OF CLASSIFICATION 3	.00	.00	.00	
	0	COMPOUNDS OF CLASSIFICATION 4	.00	.00	.00	
	0	COMPOUNDS OF CLASSIFICATION 5	.00	.00	.00	
	0	COMPOUNDS OF CLASSIFICATION 6	00	00	.00	
	0	COMPOUNDS OF CLASSIFICATION 7	.00	.00	.00	
	1	COMPOUND COMPOSITE	72.15	100.00	100.00	

NOTES: A. METHOD: CALCULATIONS FROM COMPOSITE SURVEY DATA INSPECTION OF STORED PRODUCT FORMULATION
B. REFERENCES: ENGINEERING JUDGEMENT
C. APPLICABLE SCC CATEGORIES: 4-03-001-14,-59 4-03-002-14, 4-03-003-12

DECEMBER 14, 1978 TABLE 4-03-001N POINT SOURCE EVAPORATION, PETROLEUM PRODUCT STORAGE
FIXED ROOF, PENTANE
DATA CONFIDENCE LEVEL: II

CONTROL DEVICE: NONE
PROCESS MODIFICATION: NONE
KVB PROFILE KEY 0303

LINE NO.	SAROAD CODE	CHEMICAL NAME	MOLECULAR WEIGHT	PERCENT WEIGHT	PERCENT VOLUME	CHEMICAL CLASSIFICATION
1	43220	N-PENTANE	72.15	100.00	100.00	1 PARAFFIN
		TOTAL		100.00	100.00	
	1	COMPOUNDS OF CLASSIFICATION 1	72.15	100.00	100.00	
	0	COMPOUNDS OF CLASSIFICATION 2	.00	.00	.00	
	0	COMPOUNDS OF CLASSIFICATION 3	.00	.00	.00	
	0	COMPOUNDS OF CLASSIFICATION 4	.00	.00	.00	
	0	COMPOUNDS OF CLASSIFICATION 5	.00	.00	.00	
	0	COMPOUNDS OF CLASSIFICATION 6	.00	.00	.00	
	0	COMPOUNDS OF CLASSIFICATION 7	.00	.00	.00	
	1	COMPOUND COMPOSITE	72.15	100.00	100.00	

NOTES: A. METHOD: CALCULATIONS FROM COMPOSITE SURVEY DATA INSPECTION OF STORED PRODUCT FORMULATION
B. REFERENCES: ENGINEERING JUDGEMENT
C. APPLICABLE SCC CATEGORIES: 4-03-001-15,-60, 4-03-002-15, 4-03-003-13

DECEMBER 14, 1978 TABLE 4-03-001P POINT SOURCE EVAPORATION, PETROLEUM PRODUCT STORAGE
FIXED ROOF, TOLUENE
DATA CONFIDENCE LEVEL: II

CONTROL DEVICE: NONE
PROCESS MODIFICATION: NONE
KVB PROFILE KEY 0185

LINE NO.	SAROAD CODE	CHEMICAL NAME	MOLECULAR WEIGHT	PERCENT WEIGHT	PERCENT VOLUME	CHEMICAL CLASSIFICATION
1	45202	TOLUENE	92.13	100.00	100.00	3 AROMATIC
		TOTAL		100.00	100.00	
	0	COMPOUNDS OF CLASSIFICATION 1	.00	.00	.00	
	0	COMPOUNDS OF CLASSIFICATION 2	.00	.00	.00	
	1	COMPOUNDS OF CLASSIFICATION 3	92.13	100.00	100.00	
	0	COMPOUNDS OF CLASSIFICATION 4	.00	.00	.00	
	0	COMPOUNDS OF CLASSIFICATION 5	.00	.00	.00	
	0	COMPOUNDS OF CLASSIFICATION 6	.00	.00	.00	
	0	COMPOUNDS OF CLASSIFICATION 7	.00	.00	.00	
	1	COMPOUND COMPOSITE	92.13	100.00	100.00	

NOTES: A. METHOD: CALCULATIONS FROM COMPOSITE SURVEY DATA INSPECTION OF STORED PRODUCT FORMULATION
B. REFERENCES: ENGINEERING JUDGEMENT
C. APPLICABLE SCC CATEGORIES: 4-03-001-16,-61, 4-03-002-16,4-03-003-14

DECEMBER 14, 1978 TABLE 4-03-001Q POINT SOURCE EVAPORATION, PETROLEUM PRODUCT STORAGE
FIXED ROOF, COMPOSITE PROFILE FOR CRUDE OIL AND WASTE WATER
DATA CONFIDENCE LEVEL: III

CONTROL DEVICE: NONE
PROCESS MODIFICATION: NONE
KVB PROFILE KEY 0188

LINE NO.	SAROAD CODE	CHEMICAL NAME	MOLECULAR WEIGHT	PERCENT WEIGHT	PERCENT VOLUME	CHEMICAL CLASSIFICATION	
1	43105	ISOMERS OF HEXANE	86.17	1.30	.56	1	PARAFFIN
2	43112	ISOMERS OF DODECANE	170.33	30	.08	1	PARAFFIN
3	43115	C-7 CYCLOPARAFFINS	98.19	4.50	1.73	1	PARAFFIN
4	43116	C-8 CYCLOPARAFFINS	112.23	1.30	.45	1	PARAFFIN
5	43122	ISOMERS OF PENTANE	72.15	7.10	3.68	1	PARAFFIN
6	43204	PROPANE	44.09	21.30	18.12	1	PARAFFIN
7	43212	N-BUTANE	58.12	16.60	10.73	1	PARAFFIN
8	43214	ISOBUTANE	58.12	8.30	5.37	1	PARAFFIN
9	43220	N-PENTANE	72.15	5.80	3.00	1	PARAFFIN
10	43231	N-HEXANE	86.17	4.20	1.84	1	PARAFFIN
11	43201	METHANE	16.04	16.80	39.29	6	METHANE
12	43202	ETHANE	30.07	11.90	14.86	7	NON-REACTIVE
13	45201	BENZENE	78.11	.60	.30	7	NON-REACTIVE
		TOTAL		100.00	100.01		
	10	COMPOUNDS OF CLASSIFICATION 1	58.33	70.70	45.56		
	0	COMPOUNDS OF CLASSIFICATION 2	.00	.00	.00		
	0	COMPOUNDS OF CLASSIFICATION 3	.00	.00	.00		
	0	COMPOUNDS OF CLASSIFICATION 4	.00	.00	.00		
	0	COMPOUNDS OF CLASSIFICATION 5	.00	.00	.00		
	1	COMPOUNDS OF CLASSIFICATION 6	16.04	16.80	39.29		
	2	COMPOUNDS OF CLASSIFICATION 7	31.02	12.50	15.16		
	13	COMPOUND COMPOSITE	37.58	100.00	100.01		

NOTES: A. METHOD: CALCULATIONS FROM COMPOSITE SURVEY DATA GC-MS ANALYSIS OF GRAB SAMPLES TAKEN WITHIN LIQUID-AIR INTERF/
B. REFERENCES: KVB TEST DATA (REF. 3)
C. APPLICABLE SCC CATEGORIES: 4-03-001-98

DECEMBER 14, 1978 TABLE 4-03-003 POINT SOURCE EVAPORATION, PETROLEUM PRODUCT STORAGE
VARIABLE VAPOR SPACE, LIQUIFIED PETROLEUM GAS
DATA CONFIDENCE LEVEL: II

CONTROL DEVICE: NONE
PROCESS MODIFICATION: NONE
KVB PROFILE KEY 0232

LINE NO.	SAROAD CODE	CHEMICAL NAME	MOLECULAR WEIGHT	PERCENT WEIGHT	PERCENT VOLUME	CHEMICAL CLASSIFICATION	
1	43204	PROPANE	44.09	90.60	88.77	1	PARAFFIN
2	43214	ISOBUTANE	58.12	.20	.13	1	PARAFFIN
3	43205	PROPYLENE	42.08	5.10	5.23	2	OLEFIN
4	43202	ETHANE	30.07	4.10	5.87	7	NON-REACTIVE
		TOTAL		100.00	100.00		
	2	COMPOUNDS OF CLASSIFICATION 1	44.11	90.80	88.90		
	1	COMPOUNDS OF CLASSIFICATION 2	42.08	5.10	5.23		
	0	COMPOUNDS OF CLASSIFICATION 3	.00	.00	.00		
	0	COMPOUNDS OF CLASSIFICATION 4	.00	.00	.00		
	0	COMPOUNDS OF CLASSIFICATION 5	.00	00	.00		
	0	COMPOUNDS OF CLASSIFICATION 6	.00	.00	.00		
	1	COMPOUNDS OF CLASSIFICATION 7	30.07	4.10	5.87		
	4	COMPOUND COMPOSITE	43.18	100.00	100.00		

NOTES: A. METHOD: CALCULATIONS FROM COMPOSITE SURVEY DATA ENGINEERING EVALUATION OF LITERATURE DATA
B. REFERENCES: LITERATURE DATA (REF. 3)
C. APPLICABLE SCC CATEGORIES: 4-03-003-99

DECEMBER 14, 1978 TABLE 4-06-002 POINT SOURCE EVAPORATION, PETROLEUM PRODUCT STORAGE
FIXED ROOF, COMPOSITE FOR CRUDE OIL, MARINE TERMINAL
DATA CONFIDENCE LEVEL: III

CONTROL DEVICE: NONE
PROCESS MODIFICATION: NONE
KVB PROFILE KEY 0305

LINE NO.	SAROAD CODE	CHEMICAL NAME	MOLECULAR WEIGHT	PERCENT WEIGHT	PERCENT VOLUME	CHEMICAL CLASSIFICATION	
1	43204	PROPANE	44.09	15.80	20.90	1	PARAFFIN
2	43212	N-BUTANE	58.12	30.20	30.36	1	PARAFFIN
3	43220	N-PENTANE	72.15	18.50	14.94	1	PARAFFIN
4	43231	N-HEXANE	86.17	8.80	5.95	1	PARAFFIN
5	43232	N-HEPTANE	100.20	10.80	6.30	1	PARAFFIN
6	43233	N-OCTANE	114.23	9.60	4.90	1	PARAFFIN
7	43201	METHANE	16.04	2.60	9.46	6	METHANE
8	43202	ETHANE	30.07	3.70	7.18	7	NON-REACTIVE
		TOTAL		100.00	99.99		
	6	COMPOUNDS OF CLASSIFICATION 1	65.60	93.70	83.35		
	0	COMPOUNDS OF CLASSIFICATION 2	.00	.00	.00		
	0	COMPOUNDS OF CLASSIFICATION 3	.00	.00	.00		
	0	COMPOUNDS OF CLASSIFICATION 4	.00	.00	.00		
	0	COMPOUNDS OF CLASSIFICATION 5	.00	.00	.00		
	1	COMPOUNDS OF CLASSIFICATION 6	16.04	2.60	9.46		
	1	COMPOUNDS OF CLASSIFICATION 7	30.07	3.70	7.18		
	8	COMPOUND COMPOSITE	58.36	100.00	99.99		

NOTES: A. METHOD: CALCULATIONS FROM COMPOSITE SURVEY DATA ENGINEERING JUDGEMENT OF LITERATURE DATA
B. REFERENCES: LITERATURE TEST DATA (REF. 6)
C. APPLICABLE SCC CATEGORIES: 4-06-002-02,-27

REFERENCES

1. "Compilation of Pollutant Emission Factors," Environmental Protection Agency, Research Triangle Park, NC, AP-42, August 1977.

2. Danielson, J. A. (Ed), "Air Pollution Engineering Manual," Environmental Protection Agency, Reserach Triangle Park, NC, AP-40, May 1973.

3. Taback, H. J. et al., "Control of Hydrocarbon Emissions from Stationary Sources in the California South Coast Air Basin," Vol. I and II, KVB, Inc., Tustin, CA, June 1978.

4. "Evaporation Loss in the Petroleum Industry - Causes and Control," American Petroleum Institute, Evaporation and Loss Committee, API Bulletin 2513, Washington, DC, 1959.

5. "Evaluation of Hydrocarbon Emissions from Floating Roof Petroleum Tanks," Engineering-Science, Inc., sponsored by the Western Oil and Gas Association, January 1977.

6. "Hydrocarbon Emissions from Fixed-Roof Petroleum Tanks," Engineering-Science, Inc., sponsored by the Western Oil and Gas Association, July 1977.

7. Adrian, R., "Emissions from Fixed Roof Tanks - Santa Barbara County," California Air Resources Board, November 1978.

8. Burklin, C. E., et al., "Revision of Evaporative Hydrocarbon Emission Factors," report for EPA-450/3-76-039, 1976.

9. Jonker, P. E., et al., "Control Floating Roof Tank Emissions," Hydrocarbon Processing, Gulf Publishing Co., May 1977.

10. "61st Annual Report of the State Oil and Gas Supervisor," California Division of Oil and Gas, Report No. PR06, 1975.

11. Mayrsohn, H. and Crabtree, J., Source Reconciliation of Atmospheric Hydrocarbons in the South Coast Air Basin, 1975, California Air Resources Board, December 1976.

4-05 POINT SOURCE EVAPORATION, PRINTING PRESS GRAPHIC ART PROCESSES

Introduction[1,2]

There are four major classes of graphic art printing processes:

1. letterpress,
2. lithographic,
3. flexographic, and
4. rotogravure.

The first two processes use oil or paste inks, and the last two use solvent inks. These inks vary in physical appearance, composition, method of application, and drying mechanism. Although flexographic and rotogravure inks have many elements in common with paste inks, they differ because of their low viscosity and dry by evaporation of highly volatile solvents.

There are three general processes in the manufacture of printing inks: (1) cooking the vehicle and adding dyes, (2) grinding of a pigment into the vehicle using a roller mill, and (3) replacing water in the wet pigment pulp by an ink vehicle (commonly known as the flushing process). The ink "varnish" or vehicle is generally cooked in large kettles at 200 ° to 600 °F (93 ° to 315 °C) for an average of eight to twelve hours in much the same way that regular varnish is made. Mixing of the pigment and vehicle is done in dough mixers or in large agitated tanks. Grinding is most often carried out in three-roller or five-roller horizontal or vertical mills.

Since the information and details of each of the different printing processes vary considerably, it was decided that each process should be treated as a separate section in this report.

4.05 POINT SOURCE EVAPORATION, PRINTING PRESS

4-05-002 LETTERPRESS PROCESS

Process Description[1]

Letterpress printing is the oldest and most basic form of printing and still predominates in periodical and newspaper publishing. In letterpress printing, ink is transferred to the paper from the image surface. This surface is raised relative to the nonprinting surface of the plate. Consult Reference 2 for a more detailed explanation of this graphic art process.

Emissions[1]

The major sources of hydrocarbon emissions from letterpress printing occur from the:

- hot air dryer
- press unit, and
- chill rolls

In letterpress printing operations, the ink is the major source of hydrocarbons. Hydrocarbon emissions rate data and process information can be obtained from Reference 1. Hydrocarbon species data on emissions from these sources is presented in

Controls[1]

Control of the hydrocarbon emissions from letterpress operations in general are categorized according to the following:

- Process modification--microwave drying
  --infrared drying
  --electron beam drying
  --ultraviolet drying
- Ink modification--aqueous inks
  --solventless inks
- Incineration, exhaust gas--thermal
  --catalytic
  --combination of both
- Adsorption--activated carbon

For a more thorough explanation of each control method, consult References 1, 3 and 4.

Profile Basis[3]

The basis for profiles 4-05-002A and B was test data obtained from a typical letterpress printing operation employing paste type inks and a hot air dryer. Profile 4-05-002A included VOC's from incomplete combustion from the direct fired dryer. A sampling train consisting of a glass gas collection bottle and NIOSH type charcoal tubes was employed. Samples were taken at points within the exhaust duct work located upstream and downstream of a thermal afterburner.

Data Qualifications

The following profiles may be used to characterize the organic emissions from a typical lettpress printing operation employing a hot air dryer and a thermal gas fired afterburner.

DECEMBER 14, 1978 TABLE 4-05-002A

POINT SOURCE EVAPORATION, PRINTING PRESS
LETTERPRESS, INKING AND DRYING (DIRECT-FIRED DRIER)
DATA CONFIDENCE LEVEL: IV

CONTROL DEVICE: NONE
PROCESS MODIFICATION: NONE
KVB PROFILE KEY 0334

LINE NO.	SAROAD CODE	CHEMICAL NAME	MOLECULAR WEIGHT	PERCENT WEIGHT	PERCENT VOLUME	CHEMICAL CLASSIFICATION	
1	43204	PROPANE	44.09	3.00	1.30	1	PARAFFIN
2	43212	N-BUTANE	58.12	3.00	1.00	1	PARAFFIN
3	43214	ISOBUTANE	58.12	1.00	.33	1	PARAFFIN
4	43203	ETHYLENE	28.05	13.00	8.88	2	OLEFIN
5	43205	PROPYLENE	42.08	3.00	1.36	2	OLEFIN
6	43213	BUTENE	56.10	1.00	.34	2	OLEFIN
7	43201	METHANE	16.04	69.00	82.33	6	METHANE
8	43202	ETHANE	30.07	7.00	4.46	7	NON-REACTIVE
		TOTAL		100.00	100.00		
	3	COMPOUNDS OF CLASSIFICATION 1	51.19	7.00	2.63		
	3	COMPOUNDS OF CLASSIFICATION 2	30.75	17.00	10.58		
	0	COMPOUNDS OF CLASSIFICATION 3	.00	.00	.00		
	0	COMPOUNDS OF CLASSIFICATION 4	.00	.00	.00		
	0	COMPOUNDS OF CLASSIFICATION 5	.00	.00	.00		
	1	COMPOUNDS OF CLASSIFICATION 6	16.04	69.00	82.33		
	1	COMPOUNDS OF CLASSIFICATION 7	30.07	7.00	4.46		
	8	COMPOUND COMPOSITE	19.15	100.00	100.00		

NOTES: A. METHOD: CALCULATIONS FROM COMPOSITE SURVEY DATA GC-MS ANALYSIS OF SAMPLING TRAIN CATCH
B. REFERENCES: KVB TEST DATA (REF. 3)
C. APPLICABLE SCC CATEGORIES: 4-05--002-99

DECEMBER 14, 1978 TABLE 4-05-002

POINT SOURCE EVAPORATION, PRINTING PRESS
LETTERPRESS, INKING PROCESS
DATA CONFIDENCE LEVEL: IV

CONTROL DEVICE: CATALYTIC AFTERBURNER
PROCESS MODIFICATION: NONE
KVB PROFILE KEY 0166

LINE NO.	SAROAD CODE	CHEMICAL NAME	MOLECULAR WEIGHT	PERCENT WEIGHT	PERCENT VOLUME	CHEMICAL CLASSIFICATION	
1	43204	PROPANE	44.09	12.00	5.42	1	PARAFFIN
2	43212	N-BUTANE	58.12	1.00	.34	1	PARAFFIN
3	43201	METHANE	16.04	63.00	78.33	6	METHANE
4	43202	ETHANE	30.07	24.00	15.91	7	NON-REACTIVE
		TOTAL		100.00	100.00		
	2	COMPOUNDS OF CLASSIFICATION 1	44.92	13.00	5.76		
	0	COMPOUNDS OF CLASSIFICATION 2	.00	.00	.00		
	0	COMPOUNDS OF CLASSIFICATION 3	.00	.00	.00		
	0	COMPOUNDS OF CLASSIFICATION 4	.00	.00	.00		
	0	COMPOUNDS OF CLASSIFICATION 5	.00	.00	.00		
	1	COMPOUNDS OF CLASSIFICATION 6	16.04	63.00	78.33		
	1	COMPOUNDS OF CLASSIFICATION 7	30.07	24.00	15.91		
	4	COMPOUND COMPOSITE	19.94	100.00	100.00		

NOTES:
A. METHOD: CALCULATIONS FROM COMPOSITE SURVEY DATA GC-MS ANALYSIS OF SAMPLING TRAIN CATCH
B. REFERENCES: KVB TEST DATA (REF. 3)
C. APPLICABLE SCC CATEGORIES: 4-05-002-99

REFERENCES

1. Formica, P. N., "Controlled and Uncontrolled Emission Rates and Applicable Limitations for Eighty Processes," prepared for EPA Office of Air Quality Planning and Standards, Research Triangle Park, NC, EPA-340/1-78-004, April 1978.

2. "Compilation of Pollutant Emission Factors," Environmental Protection Agency, Research Triangle Park, NC, AP-42, August 1977.

3. Taback, H. J., et al., "Control of Hydrocarbon Emissions from Stationary Sources in the California South Coast Air Basin," Vol I and II, KVB, Inc., Tustin, CA, June 1978.

4. Danielson, J. A. (ed.), "Air Pollution Engineering Manual," Environmental Protection Agency, Research Triangle Park, NC, AP-40, May 1973.

5. Sonnichsen, T. W., KVB Engineer.

4-05 POINT SOURCE EVAPORATION, PRINTING PRESS

4-05-003 FLEXOGRAPHIC PROCESS

Process Description[2]

Flexographic printing is similar to letterpress, where the image area is raised above the surface of the plate. Ink is transferred directly to the image area of the plate and directly from the plate to the paper or substrate. Whenever the plate is made of rubber and alcohol based inks are used, the process is flexography. The process is always web fed and is used for medium or long runs on a variety of substrates, including heavy paper, fiberboard, metal, and plastic foil.

Flexographic processes differ among themselves mainly in the type of ink used. Most flexographic inks are fluid in consistency and contain about 55% organic solvent. The solvent may be alcohol or alcohol mixed with aliphatic hydrocarbons or esters.

Flexography printing uses two similar but different processes. The composition of the ink and the inclusion of drying are the main areas where the processes differ. The two types of flexographic printing are:

1. flexographic, publication and
2. flexographic, newspaper.

For further process information, consult Reference 2.

Emissions[1]

The major sources of hydrocarbon emissions from flexographic printing occur from the:

- hot air dryer
- press unit, and
- chill rolls

In a typical flexographic operation, the ink is the major source of hydrocarbons. Emission rates and information can be found in Reference 1.

Organic species data on emission from these sources using alcohol based inks is presented in profiles 4-05-003A and B.

Controls[1]

Control of hydrocarbon emission from flexographic web fed offset printing are categorized according to the following:

- process modification - microwave drying
  infrared drying
  electron beam drying
  ultraviolet drying
- ink modification - aqueous inks
  solventless inks
- incineration, exhaust gas - thermal
  catalytic
  combination, and
- adsorption - activated carbon

For a thorough explanation of each control method, consult References 1, 3 and 4.

Profile Basis[3,5]

Profiles 4-05-003A and B were developed using engineering evaluation and judgement of data obtained from industry questionnaires and pertinent, literature, respectively.

Data Qualifications

The following profiles may be used to characterize the organic emissions from a typical flexographic printing operation using alcohol based inks.

DECEMBER 14, 1978 TABLE 4-05-003A POINT SOURCE EVAPORATION, PRINTING PRESS
FLEXOGRAPHIC, COMPOSITE OF ALCOHOL BASED SOLVENT
DATA CONFIDENCE LEVEL: IV

CONTROL DEVICE: NONE
PROCESS MODIFICATION: NONE
VB PROFILE KEY 0172

LINE NO.	SAROAD CODE	CHEMICAL NAME	MOLECULAR WEIGHT	PERCENT WEIGHT	PERCENT VOLUME	CHEMICAL CLASSIFICATION	
1	43302	ETHYL ALCOHOL	46.07	47.60	57.10	5	MISCELLANEOUS
2	43303	N-PROPYL ALCOHOL	60.09	24.30	22.33	5	MISCELLANEOUS
3	43304	ISOPROPYL ALCOHOL	60.09	10.70	9.84	5	MISCELLANEOUS
4	43351	ETHYL ETHER	74.12	.90	.66	5	MISCELLANEOUS
5	43433	ETHYL ACETATE	88.10	15.10	9.45	5	MISCELLANEOUS
6	43452	2-ETHOXYETHYL ACETATE	132.00	1.40	.61	5	MISCELLANEOUS
		TOTAL		100.00	99.99		
	0	COMPOUNDS OF CLASSIFICATION 1	.00	.00	.00		
	0	COMPOUNDS OF CLASSIFICATION 2	.00	.00	.00		
	0	COMPOUNDS OF CLASSIFICATION 3	.00	.00	.00		
	0	COMPOUNDS OF CLASSIFICATION 4	.00	.00	.00		
	6	COMPOUNDS OF CLASSIFICATION 5	55.26	100.00	99.99		
	0	COMPOUNDS OF CLASSIFICATION 6	.00	.00	.00		
	0	COMPOUNDS OF CLASSIFICATION 7	.00	.00	.00		
	6	COMPOUND COMPOSITE	55.26	100.00	99.99		

NOTES: A. METHOD: CALCULATIONS FROM COMPOSITE SURVEY DATA ENGINEERING EVALUATION OF QUESTIONNAIRE DATA
B. REFERENCES: PLASTIC COATED PAPER MILK CARTON MANUFACTURERS
C. APPLICABLE SCC CATEGORIES: 4-05-003-01,-99

DECEMBER 14, 1978 TABLE 4-05-003B POINT SOURCE EVAPORATION, PRINTING PRESS
FLEXOGRAPHIC, N-PROPYL ALCOHOL
DATA CONFIDENCE LEVEL: II

CONTROL DEVICE: NONE
PROCESS MODIFICATION: NONE
KVB PROFILE KEY 0304

LINE NO.	SAROAD CODE	CHEMICAL NAME	MOLECULAR WEIGHT	PERCENT WEIGHT	PERCENT VOLUME	CHEMICAL CLASSIFICATION
1	43303	N-PROPYL ALCOHOL	60.09	100.00	100.00	5 MISCELLANEOUS
		TOTAL		100.00	100.00	
	0	COMPOUNDS OF CLASSIFICATION 1	.00	.00	.00	
	0	COMPOUNDS OF CLASSIFICATION 2	.00	.00	.00	
	0	COMPOUNDS OF CLASSIFICATION 3	.00	.00	.00	
	0	COMPOUNDS OF CLASSIFICATION 4	.00	.00	.00	
	1	COMPOUNDS OF CLASSIFICATION 5	60.09	100.00	100.00	
	0	COMPOUNDS OF CLASSIFICATION 6	.00	.00	.00	
	0	COMPOUNDS OF CLASSIFICATION 7	.00	.00	.00	
	1	COMPOUND COMPOSITE	60.09	100.00	100.00	

NOTES: A. METHOD: CALCULATIONS FROM COMPOSITE SURVEY DATA INSPECTION OF SOLVENT FORMULATION
B. REFERENCES: ENGINEERING JUDGEMENT
C. APPLICABLE SCC CATEGORIES: 4-05-003-06, 4-05-005-09

REFERENCES

1. Formica, P. N., "Controlled and Uncontrolled Emission Rates and Applicable Limitations for Eighty Processes," prepared for EPA Office of Air Quality Planning and Standards, Research Triangle Park, NC, EPA-340/1-78-004, April 1978.

2. "Compilation of Pollutant Emission Factors," Environmental Protection Agency, Research Triangle Park, NC, AP-42, August 1977.

3. Taback, H. J., et al., "Control of Hydrocarbon Emissions from Stationary Sources in the California South Coast Air Basin," Vol I and II, KVB, Inc., Tustin, CA, June 1978.

4. Danielson, J. A. (ed.), "Air Pollution Engineering Manual," Environmental Protection Agency, Research Triangle Park, NC, AP-40, May 1973.

5. Sonnichsen, T. W., KVB Engineer.

4-05 POINT SOURCE EVAPORATION, PRINTING PRESS

4-05-004 LITHOGRAPHIC PROCESS

Process Description[1]

Lithography printing is characterized by having the image area on the same plane as the non-image area. The image area chemically attracts the ink while the non-image area chemically repels ink. The printing image is applied to a cylinder which transfers the inked image directly to the substrate. This process is direct lithography. A second process called offset lithography involves the applying of a printed image to a cylinder where the inked image is transferred to a rubber blanket cylinder which in the same revolution prints the wet inked image onto the substrate. When a web or continuous roll of paper is employed with the offset process, it is called web-offset printing.

For further process information, consult Reference 1.

Emissions[1]

The major areas of hydrocarbon emissions from web-offset printing occur from the:

- press
- dryer
- chill rolls, and
- ink fountains

The ink and the coating on the paper are the major sources of hydrocarbons in web-offset printing operations. Reference 1 should be consulted for further information on emission rates and process information.

Profiles 4-05-004A and B present the hydrocarbon species emissions from these sources.

Controls[1]

Control of hydrocarbon emissions from web-offset printing are categorized according to the following:

- process modification - microwave
  infrared drying
  electron beam drying
  ultraviolet drying
- ink modification - aqueous inks
  solventless inks
- combustion, exhaust gas - thermal
  catalytic
  combination
- adsorption - activated carbon

For a thorough explanation of each control method, consult References 1, 3 and 4.

Profile Basis[3]

The data presented in profiles 3-05-004A and B is based on tests conducted at a typical lithographic printing operation. A hot air dryer was employed in profile 4-05-004A and the VOC species reflect the incomplete combustion. Samples of the exhaust gas were taken from points within the exhaust duct work located upstream and downstream of a thermal afterburner. Gas samples were collected in glass collecting bottles and NIOSH type charcoal tubes.

Data Qualification

The following profiles may be used to characterize the organic emissions from a typical lithographic printing operation employing a hot air dryer and a thermal gas-fired afterburner.

DECEMBER 14, 1978 TABLE 4-05-004A POINT SOURCE EVAPORATION, PRINTING PRESS LITHOGRAPHY, INKING AND DRYING (DIRECT-FIRED DRIER)
DATA CONFIDENCE LEVEL: IV

CONTROL DEVICE: NONE
PROCESS MODIFICATION: NONE
KVB PROFILE KEY 0333

LINE NO.	SAROAD CODE	CHEMICAL NAME	MOLECULAR WEIGHT	PERCENT WEIGHT	PERCENT VOLUME	CHEMICAL CLASSIFICATION	
1	43204	PROPANE	44.09	3.30	2.20	1	PARAFFIN
2	43212	N-BUTANE	58.12	11.50	5.80	1	PARAFFIN
3	43214	ISOBUTANE	58.12	1.80	.91	1	PARAFFIN
4	43304	ISOPROPYL ALCOHOL	60.09	.90	.44	5	MISCELLANEOUS
5	43802	DICHLOROMETHANE	84.94	34.90	12.04	5	MISCELLANEOUS
6	43201	METHANE	16.04	37.70	68.85	6	METHANE
7	43202	ETHANE	30.07	10.00	9.76	7	NON-REACTIVE
		TOTAL		100.10	100.00		
	3	COMPOUNDS OF CLASSIFICATION 1	54.66	16.60	8.91		
	0	COMPOUNDS OF CLASSIFICATION 2	.00	00	.00		
	0	COMPOUNDS OF CLASSIFICATION 3	.00	.00	.00		
	0	COMPOUNDS OF CLASSIFICATION 4	.00	.00	.00		
	2	COMPOUNDS OF CLASSIFICATION 5	84.06	35.80	12.48		
	1	COMPOUNDS OF CLASSIFICATION 6	16.04	37.70	68.85		
	1	COMPOUNDS OF CLASSIFICATION 7	30.07	10.00	9.76		
	7	COMPOUND COMPOSITE	29.34	100.10	100.00		

NOTES: A. METHOD: CALCULATIONS FROM COMPOSITE SURVEY DATA GC-MS ANALYSIS OF SAMPLING TRAIN CATCH
B. REFERENCES: KVB TEST DATA (REF. 3)
C. APPLICABLE SCC CATEGORIES: 4-05-004-99

DECEMBER 14, 1978 TABLE 4-05-004B POINT SOURCE EVAPORATION, PRINTING PRESS LITHOGRAPHY, INKING AND DRYING
DATA CONFIDENCE LEVEL: IV

CONTROL DEVICE: THERMAL AFTERBURNER
PROCESS MODIFICATION: NONE
KVB PROFILE KEY 0332

LINE NO.	SAROAD CODE	CHEMICAL NAME	MOLECULAR WEIGHT	PERCENT WEIGHT	PERCENT VOLUME	CHEMICAL CLASSIFICATION
1	43203	ETHYLENE	28.05	2.00	2.31	2 OLEFIN
2	43205	PROPYLENE	42.08	33.60	25.99	2 OLEFIN
3	43213	BUTENE	56.10	13.60	7.87	2 OLEFIN
4	43224	1-PENTENE	70.13	11.90	5.53	2 OLEFIN
5	43502	FORMALDEHYDE	30.03	21.80	23.62	4 CARBONYL
6	43201	METHANE	16.04	17.10	34.68	6 METHANE
		TOTAL		100.00	100.00	
	0	COMPOUNDS OF CLASSIFICATION 1	.00	.00	.00	
	4	COMPOUNDS OF CLASSIFICATION 2	47.67	61.10	41.70	
	0	COMPOUNDS OF CLASSIFICATION 3	00	.00	.00	
	1	COMPOUNDS OF CLASSIFICATION 4	30.03	21.80	23.62	
	0	COMPOUNDS OF CLASSIFICATION 5	.00	00	.00	
	1	COMPOUNDS OF CLASSIFICATION 6	16.04	17.10	34.68	
	0	COMPOUNDS OF CLASSIFICATION 7	.00	00	.00	
	6	COMPOUND COMPOSITE	32.53	100.00	100.00	

NOTES: A. METHOD: CALCULATIONS FROM COMPOSITE SURVEY DATA GC-MS ANALYSIS OF SAMPLING TRAIN CATCH
B. REFERENCES: KVB TEST DATA (REF. 3)
C. APPLICABLE SCC CATEGORIES: 4-05-004-99

REFERENCES

1. Formica, P. N., "Controlled and Uncontrolled Emission Rates and Applicable Limitations for Eighty Processes," prepared for EPA Office of Air Quality Planning and Standards, Research Triangle Park, NC, EPA-340/1-78-004, April 1978.

2. "Compilation of Pollutant Emission Factors," Environmental Protection Agency, Research Triangle Park, NC, AP-42, August 1977.

3. Taback, H. J., et al., "Control of Hydrocarbon Emissions from Stationary Sources in the California South Coast Air Basin," Vol I and II, KVB, Inc., Tustin, CA, June 1978.

4. Danielson, J. A. (ed.), "Air Pollution Engineering Manual," Environmental Protection Agency, Research Triangle Park, NC, AP-40, May 1973.

5. Sonnichsen, T. W., KVB Engineer.

4-05-005 GRAPHIC ARTS--ROTOGRAVURE

Process Description[1]

Gravure printing is a type of printing where the image area is recessed relative to the surface of the image carrier. Ink is picked up in the engraved area, and excess ink is scraped off the nonimage area with a "doctor blade." Ink is tranferred directly from the image carrier to the paper or film. Gravure may be sheet-fed or roll-fed. Sheet-fed gravure uses either a flat plate for an image carrier, or a curved plate which is attached to a cylinder. In roll-fed gravure, or rotogravure, the image is engraved in the cylinder itself. Rotogravure may be used for coated or uncoated paper, film, foil, and many combinations thereof.

The ink used in high speed gravure printing contains a relatively large amount of low-boiling solvent and has a low viscosity. The rotogravure inks contain approximately 65% highly volatile, aromatic solvent which is not subject to decomposition in the drying process. Control of solvent vapors around the ink fountain is desirable to avoid the danger of explosion. For most commercial operations, the solvent concentration in the exhaust gases ranges between 25% and 40% of the lower explosive limit.

For further process information consult Reference 1.

Emissions[1]

The major areas of hydrocarbon emissions from rotogravure printing occur from the:

- hot air dryer
- press unit
- chill rollers, and
- ink fountain

In gravure printing operations the ink is the major source of hydrocarbon emissions. Emission rates and information can be found in Reference 1.

Hydrocarbon species data on emissions from these sources are presented in profiles 4-05-005A, B, C and D.

Controls[1]

Control of hydrocarbon emissions from gravure printing are categorized according to the following:

- process modification - microwave drying
  infrared drying
  electron beam drying
  ultraviolet drying
- ink modification - aqueous inks
  solventless inks
- incineration, exhaust gas - thermal
  catalytic
  combination, and
- adsorption - activated carbon

For a thorough explanation of each control method, consult References 1, 3 and 4.

Profile Basis[3,5]

Profiles 4-05-005A, B, C and D were developed from data obtained from industry questionnaires and literature. An engineering evaluation of the data was performed.

Data Qualification

The following profiles may be used to characterize the organic emissions from a typical rotogravure printing process.

DECEMBER 14, 1978 TABLE 4-05-005A POINT SOURCE EVAPORATION, PRINTING PRESS
GRAVURE, PAPERBOARD PRINTING
DATA CONFIDENCE LEVEL: III

CONTROL DEVICE: NONE
PROCESS MODIFICATION: NONE
KVB PROFILE KEY 0181

LINE NO.	SAROAD CODE	CHEMICAL NAME	MOLECULAR WEIGHT	PERCENT WEIGHT	PERCENT VOLUME	CHEMICAL CLASSIFICATION	
1	43118	MINERAL SPIRITS	114.00	5.40	3.80	1	PARAFFIN
2	43231	N-HEXANE	86.17	6.20	5.82	1	PARAFFIN
3	43232	N-HEPTANE	100.20	6.60	5.33	1	PARAFFIN
4	45202	TOLUENE	92.13	12.00	10.50	3	AROMATIC
5	43551	ACETONE	58.08	.80	1.13	4	CARBONYL
6	43552	METHYL ETHYL KETONE	72.10	7.80	8.72	4	CARBONYL
7	43119	LACTOL SPIRITS	114.00	1.00	.73	5	MISCELLANEOUS
8	43302	ETHYL ALCOHOL	46.07	8.60	15.11	5	MISCELLANEOUS
9	43303	N-PROPYL ALCOHOL	60.09	.30	.40	5	MISCELLANEOUS
10	43304	ISOPROPYL ALCOHOL	60.09	10.80	14.54	5	MISCELLANEOUS
11	43433	ETHYL ACETATE	88.10	18.20	16.72	5	MISCELLANEOUS
12	43434	PROPYL ACETATE	102.13	1.30	1.05	5	MISCELLANEOUS
13	43444	ISOPROPYL ACETATE	104.00	20.10	15.59	5	MISCELLANEOUS
14	43452	2-ETHOXYETHYL ACETATE	132.00	.90	.57	5	MISCELLANEOUS
		TOTAL		100.00	100.01		
	3	COMPOUNDS OF CLASSIFICATION 1	98.25	18.20	14.95		
	0	COMPOUNDS OF CLASSIFICATION 2	.00	.00	.00		
	1	COMPOUNDS OF CLASSIFICATION 3	92.13	12.00	10.50		
	2	COMPOUNDS OF CLASSIFICATION 4	70.49	8.60	9.85		
	8	COMPOUNDS OF CLASSIFICATION 5	76.56	61.20	64.71		
	0	COMPOUNDS OF CLASSIFICATION 6	.00	.00	.00		
	0	COMPOUNDS OF CLASSIFICATION 7	.00	.00	.00		
	14	COMPOUND COMPOSITE	80.84	100.00	100.01		

NOTES: A. METHOD: CALCULATIONS FROM COMPOSITE SURVEY DATA ENGINEERING EVALUATION OF QUESTIONNAIRE DATA
B. REFERENCES: REPRESENTATIVE PRINTING COMPANY
C. APPLICABLE SCC CATEGORIES: 4-05-005-01

DECEMBER 14, 1978 TABLE 4-05-005B POINT SOURCE EVAPORATION, PRINTING PRESS
GRAVURE, PERIODICALS, PRINTING SOLVENT
DATA CONFIDENCE LEVEL: IV

CONTROL DEVICE: NONE
PROCESS MODIFICATION: NONE
KVB PROFILE KEY 0183

LINE NO.	SAROAD CODE	CHEMICAL NAME	MOLECULAR WEIGHT	PERCENT WEIGHT	PERCENT VOLUME	CHEMICAL CLASSIFICATION
1	43118	MINERAL SPIRITS	114.00	83.00	80.26	1 PARAFFIN
2	45102	ISOMERS OF XYLENE	106.16	4.00	4.19	3 AROMATIC
3	45202	TOLUENE	92.13	13.00	15.55	3 AROMATIC
		TOTAL		100.00	100.00	
	1	COMPOUNDS OF CLASSIFICATION 1	114.00	83.00	80.26	
	0	COMPOUNDS OF CLASSIFICATION 2	.00	.00	.00	
	2	COMPOUNDS OF CLASSIFICATION 3	95.11	17.00	19.74	
	0	COMPOUNDS OF CLASSIFICATION 4	.00	.00	.00	
	0	COMPOUNDS OF CLASSIFICATION 5	.00	.00	.00	
	0	COMPOUNDS OF CLASSIFICATION 6	.00	.00	.00	
	0	COMPOUNDS OF CLASSIFICATION 7	.00	.00	.00	
	3	COMPOUND COMPOSITE	110.27	100.00	100.00	

NOTES: A. METHOD: CALCULATIONS FROM COMPOSITE SURVEY DATA ENGINEERING EVALUATION OF LITERATURE DATA
B. REFERENCES: T.W. SONNICHSEN, KVB ENGINEER
C. APPLICABLE SCC CATEGORIES: 4-05-005-01, 4-05-005-99

DECEMBER 14, 1978 TABLE 4-05-005C POINT SOURCE EVAPORATION, PRINTING PRESS
GRAVURE, COMMERCIAL PRINTING SOLVENT
DATA CONFIDENCE LEVEL: IV

CONTROL DEVICE: NONE
PROCESS MODIFICATION: NONE
KVB PROFILE KEY 0184

LINE NO.	SAROAD CODE	CHEMICAL NAME	MOLECULAR WEIGHT	PERCENT WEIGHT	PERCENT VOLUME	CHEMICAL CLASSIFICATION
1	43118	MINERAL SPIRITS	114.00	83.00	80.26	1 PARAFFIN
2	45102	ISOMERS OF XYLENE	106.16	4.00	4.19	3 AROMATIC
3	45202	TOLUENE	92.13	13.00	15.55	3 AROMATIC
		TOTAL		100.00	100.00	
	1	COMPOUNDS OF CLASSIFICATION 1	114.00	83.00	80.26	
	0	COMPOUNDS OF CLASSIFICATION 2	.00	.00	.00	
	2	COMPOUNDS OF CLASSIFICATION 3	95.11	17.00	19.74	
	0	COMPOUNDS OF CLASSIFICATION 4	.00	.00	.00	
	0	COMPOUNDS OF CLASSIFICATION 5	.00	.00	.00	
	0	COMPOUNDS OF CLASSIFICATION 6	.00	.00	.00	
	0	COMPOUNDS OF CLASSIFICATION 7	00	.00	.00	
	3	COMPOUND COMPOSITE	110.27	100.00	100.00	

NOTES: A. METHOD: CALCULATIONS FROM COMPOSITE SURVEY DATA ENGINEERING EVALUATION OF LITERATURE DATA
B. REFERENCES: T.W. SONNICHSEN, KVB ENGINEER
C. APPLICABLE SCC CATEGORIES: 4-05-005-01,-99

DECEMBER 14, 1978 TABLE 4-05-005D POINT SOURCE EVAPORATION, PRINTING PRESS
GRAVURE, GENERAL SOLVENT
DATA CONFIDENCE LEVEL: III

CONTROL DEVICE: NONE
PROCESS MODIFICATION: NONE
KVB PROFILE KEY 0182

LINE NO.	SAROAD CODE	CHEMICAL NAME	MOLECULAR WEIGHT	PERCENT WEIGHT	PERCENT VOLUME	CHEMICAL CLASSIFICATION
1	43118	MINERAL SPIRITS	114.00	51.00	40.20	1 PARAFFIN
2	43248	CYCLOHEXANE	84.16	10.00	10.70	1 PARAFFIN
3	45106	ISOMERS OF DIETHYLBENZENE	134.21	7.00	4.68	3 AROMATIC
4	45203	ETHYLBENZENE	106.16	6.00	5.13	3 AROMATIC
5	43301	METHYL ALCOHOL	32.04	6.00	16.82	5 MISCELLANEOUS
6	43304	ISOPROPYL ALCOHOL	60.09	6.00	8.99	5 MISCELLANEOUS
7	43305	N-BUTYL ALCOHOL	74.12	6.00	7.28	5 MISCELLANEOUS
8	43435	N-BUTYL ACETATE	116.16	8.00	6.21	5 MISCELLANEOUS
		TOTAL		100.00	100.01	
	2	COMPOUNDS OF CLASSIFICATION 1	107.73	61.00	50.90	
	0	COMPOUNDS OF CLASSIFICATION 2	.00	.00	.00	
	2	COMPOUNDS OF CLASSIFICATION 3	119.54	13.00	9.81	
	0	COMPOUNDS OF CLASSIFICATION 4	.00	.00	.00	
	4	COMPOUNDS OF CLASSIFICATION 5	59.54	26.00	39.30	
	0	COMPOUNDS OF CLASSIFICATION 6	.00	.00	.00	
	0	COMPOUNDS OF CLASSIFICATION 7	.00	.00	.00	
	8	COMPOUND COMPOSITE	89.95	100.00	100.01	

NOTES: A. METHOD: CALCULATIONS FROM COMPOSITE SURVEY DATA ENGINEERING EVALUATION OF LITERATURE DATA
B. REFERENCES: LITERATURE TEST DATA (REF. 3)
C. APPLICABLE SCC CATEGORIES: 4-05-005-01,-99

REFERENCES

1. Formica, P. N., "Controlled and Uncontrolled Emission Rates and Applicable Limitations for Eighty Processes," prepared for EPA Office of Air Quality Planning and Standards, Research Triangle Park, NC, EPA-340/1-78-004, April 1978.

2. "Compilation of Pollutant Emission Factors," Environmental Protection Agency, Research Triangle Park, NC, AP-42, August 1977.

3. Taback, H. J., et al., "Control of Hydrocarbon Emissions from Stationary Sources in the California South Coast Air Basin," Vol I and II, KVB, Inc., Tustin, CA, June 1978.

4. Danielson, J. A. (ed.), "Air Pollution Engineering Manual," Environmental Protection Agency, Research Triangle Park, NC, AP-40, May 1973

5. Sonnichsen, T. W., KVB Engineer.

5-01 SOLID WASTE

5-01 SOLID WASTE, GOVERNMENT

5-01-002 OPEN BURNING DUMP--LANDSCAPE/PRUNING
--AGRICULTURAL

Process Description[1,2]

Disposal of agricultural/landscape wastes by open burning is imperative because refuse piles retain horticultural diseases and agricultural pests. Open burning is performed in many areas as a practical means of clearing the land of these wastes. Open burning is done in open drums or baskets, and in large-scale open dumps, piles or pits.

Agricultural waste burning occurs in two basic patterns, head fires and back fires. Head fires are started at the upwind side of a field and allowed to progress in the direction of the wind whereas back fires are started at the downwind edge and forced to progress in a direction opposing the wind.

Emissions[1,2]

Ground level open burning is affected by many variables including wind, ambient temperature, agricultural waste composition and moisture content, and compactness of the waste pile.

The relatively low temperatures associated with open burning causes emissions of large quantities of unburned particulates, carbon monoxide and hydrocarbons, while suppressing the emissions of oxides of nitrogen.

Emissions from agricultural/landscape waste burnings are dependent mainly on moisture content and in the case of field crops, whether the refuse is burned in a head-fire or back-fire mode. Other variables such as fuel loading (how much refuse material is burned per unit of land area?) and how the refuse is arranged (e.g., piles, rows or spread out).

Emission factors for open burning (pile form) are presented in the following table. For further information on the variables affecting emissions consult Reference 3.

TABLE FOR AGRICULTURAL WASTE BURNING EMISSION FACTORS

Hydrocarbon, lbs/ton of Fuel Burned							
<5	5-10	10-15	15-20	>20	Average Emissions*		Average Fuel Moisture (lbs/ton)
Field and weeds					17.3	@	12.3
tule	sorghum mixed weeds cotton	rice ditch bank weeds	barley corn hay wheat	alfalfa asparagus bean oats peas safflower			
Orchard and vines					11.1 7.5	@ @	40.3 23.7
apple boysen-berry nectarine prune	almond apricot date fig peach pear walnut	cherry	olive	avocado			

Source: Reference 3

* The presented factor ranges are based on the assumption that burning would be conducted under those conditions where lower emissions could be expected (pile form).

Controls[3]

Landscape/agricultural open burning is an uncontrolled pollution problem from the equipment application point of view. Controls in this instance generally take the form of:

- Burning on days of favorable weather (e.g., low winds, no rain)
- Drying of debris to a low moisture content
  - -- Orchard and vines, 35-25% moisture
  - -- Field and weeds, ∿12% moisture
- Cold start type of ignition instead of roll-on type of ignition (especially for orchard crops produces lower hydrocarbon emissions).

For further information on this subject, the reader is advised to consult the references cited at the end of this section.

Profile Basis[4]

Numerous articles on the various aspects of agricultural/landscape waste burning were researched prior to constructing the composite profile of hydrocarbon specie emissions (Profile 5-01-002).

Data Qualification

Profile 5-01-002 is a composite for agricultural/landscape/pruning open burning and may be used to characterize the VOC emissions for government and agricultural operations involving these materials. It should be used with discretion, however, when applying it to open burning of refuse for commercial, institutional and industrial operations unless the same materials discussed above are being burned.

DECEMBER 14, 1978 TABLE 5-01-002 SOLID WASTE, GOVERNMENT, OPEN BURNING DUMP
LANDSCAPE/PRUNING
DATA CONFIDENCE LEVEL: III

CONTROL DEVICE: NONE
PROCESS MODIFICATION: NONE
KVB PROFILE KEY 0121

LINE NO.	SAROAD CODE	CHEMICAL NAME	MOLECULAR WEIGHT	PERCENT WEIGHT	PERCENT VOLUME	CHEMICAL CLASSIFICATION	
1	43204	PROPANE	44.09	1.90	2.44	1	PARAFFIN
2	43212	N-BUTANE	58.12	1.90	1.87	1	PARAFFIN
3	43214	ISOBUTANE	58.12	1.90	1.87	1	PARAFFIN
4	43220	N-PENTANE	72.15	1.90	1.48	1	PARAFFIN
5	43231	N-HEXANE	86.17	13.90	9.14	1	PARAFFIN
6	43232	N-HEPTANE	100.20	13.90	7.89	1	PARAFFIN
7	43233	N-OCTANE	114.23	13.80	6.87	1	PARAFFIN
8	43121	ISOMERS OF PENTENE	70.13	11.80	9.53	2	OLEFIN
9	43203	ETHYLENE	28.05	19.40	39.27	2	OLEFIN
10	43213	BUTENE	56.10	5.90	5.96	2	OLEFIN
11	43224	1-PENTENE	70.13	11.80	9.53	2	OLEFIN
12	43206	ACETYLENE	26.04	1.90	4.14	5	MISCELLANEOUS
		TOTAL		100.00	99.99		
	7	COMPOUNDS OF CLASSIFICATION 1	88.55	49.20	31.56		
	4	COMPOUNDS OF CLASSIFICATION 2	43.13	48.90	64.29		
	0	COMPOUNDS OF CLASSIFICATION 3	.00	.00	.00		
	0	COMPOUNDS OF CLASSIFICATION 4	.00	.00	.00		
	1	COMPOUNDS OF CLASSIFICATION 5	26.04	1.90	4.14		
	0	COMPOUNDS OF CLASSIFICATION 6	.00	.00	.00		
	0	COMPOUNDS OF CLASSIFICATION 7	.00	.00	.00		
	12	COMPOUND COMPOSITE	56.76	100.00	99.99		

NOTES: A. METHOD: CALCULATIONS FROM COMPOSITE SURVEY DATA ENGINEERING EVALUATION OF LITERATURE DATA
B. REFERENCES: T.W. SONNICHSEN, KVB ENGINEER
C. APPLICABLE SCC CATEGORIES: 5-02-001-02, 5-02-002-02, 5-03-002-02

REFERENCES

1. Formica, P. N., "Controlled and Uncontrolled Emission Rate and Applicable Limitations for Eighty Processes," prepared for EPA Office of Air Quality Planning and Standards, Research Triangle Park, NC, EPA-340/1-78-004, April 1978.

2. Wayne, L. G. and McQueary, M. L., "Calculation of Emission Factors for Agricultural Burning Activities," prepared for the EPA Office of Air and Waste Management, Office of Air Planning and Standards, Research Triangle Park, NC, EPA-450/3-74-017 and 018 and 450/3-75-087.

3. Darley, Ellis F., "Emission Factors from Burning Agricultural Wastes Collected in California," Final Report, Cal/ARB Project 4-011, January 1977.

4. Taback, H. J., et al., "Control of Hydrocarbon Emissions from Stationary Sources in The California South Coast Air Basin," Vol I and II, KVB, Inc., Tustin, CA, June 1978.

5-01 SOLID WASTE, GOVERNMENT

5-01-005 INCINERATOR--BAR SCREENED SEWAGE WASTE

Process Description[1]

Sewage waste of sufficient size is filtered out of the incoming, untreated sewage effluent by a rotating bar screen and transported by means of a conveyor to the incinerator where it is combusted to an ash residue.

Composition of this sewage waste is approximately twenty percent by weight solid and eighty percent by weight liquid. Onsite digester gas is generally used to combust the waste.

A normal cycle consists of conveying the wet waste into the incinerator during a low-firing mode for approximately fifteen minutes. Conveying then halts and a period of high firing for 45 minutes takes place. The waste is then presumed to be combusted to an ash residue where it then falls through a grating into an ash pile. The cycle then repeats itself. Unburned ash waste, if present, is again combusted along with the fresh waste during the next cycle and normally removed once a day.

Emissions[2]

Gaseous hydrocarbon emissions are the result of the incomplete oxidation of the sewage waste and digester gas due mainly to flame quenching, poor mixing and short residence time.

Methane accounts for $\sim$80% by weight of the gaseous hydrocarbons being emitted. A large percent of this is due to the incomplete oxidation of the digester gas. A total hydrocarbon emissions rate of 0.25 lb HC per hr (6.3×10^{-4} grams/DSCF) was measured. Profile 5-01-005 presents the organic species measured.

Controls[1,3]

Operating conditions, waste composition and basic incinerator design have a pronounced effect on emissions. The composition of the waste material incinerated will play a major role in the type and degree of control necessary.

Listed below are a number of control methods that may be used. Economics, local air pollution regulations, and incinerator design will dictate which avenue of control to pursue.

- Drying of the waste prior to incineration
- Improved combustion - increasing the time, temperature and turbulence of the combustion reaction
- After burner installation

Profile Basis[2]

The approach to establish a profile was to use the results of an actual field test (Ref. 2) conducted on the unit described under the sections titled, "Process Description" and "Emissions."

The test method consisted of extraction of the flue gas sample by means of a gas collection bottle. A standard pitot plus thermometer was used to establish a stack gas flow rate.

Data Qualification

The reported hydrocarbon gaseous emissions resulting from the incineration of the described sewage waste applies to the installation as described above. The 195 million gallons per day (MMGD) sewage treatment plant tested serves a metropolitan area characterized by single family, multiple dwelling (apartments) and light industry (electronics, pharmaceuticals, etc.). Single family and multiple dwelling unit type sewage dominates the effluent. The sewage effluent entering the treatment plant definitely characterizes the emissions of an incinerator combusting bar screen waste. Consideration must be given to the make-up of material screened and incinerated when using profile 5-01-005.

DECEMBER 14, 1978 TABLE 5-01-005 SOLID WASTE, GOVERNMENT, INCINERATOR
BAR SCREEN WASTE INCINERATOR
DATA CONFIDENCE LEVEL: IV

CONTROL DEVICE: NONE
PROCESS MODIFICATION: NONE
KVB PROFILE KEY 0122

LINE NO.	SAROAD CODE	CHEMICAL NAME	MOLECULAR WEIGHT	PERCENT WEIGHT	PERCENT VOLUME	CHEMICAL CLASSIFICATION	
1	43203	ETHYLENE	28.05	8.70	5.61	2	OLEFIN
2	43205	PROPYLENE	42.08	.50	.22	2	OLEFIN
3	43201	METHANE	16.04	80.40	90.75	6	METHANE
4	43202	ETHANE	30.07	2.70	1.63	7	NON-REACTIVE
5	45201	BENZENE	78.11	7.70	1.79	7	NON-REACTIVE
		TOTAL		100.00	100.00		
	0	COMPOUNDS OF CLASSIFICATION 1	.00	.00	.00		
	2	COMPOUNDS OF CLASSIFICATION 2	28.58	9.20	5.83		
	0	COMPOUNDS OF CLASSIFICATION 3	.00	.00	.00		
	0	COMPOUNDS OF CLASSIFICATION 4	.00	.00	.00		
	0	COMPOUNDS OF CLASSIFICATION 5	.00	.00	.00		
	1	COMPOUNDS OF CLASSIFICATION 6	16.04	80.40	90.75		
	2	COMPOUNDS OF CLASSIFICATION 7	55.21	10.40	3.42		
	5	COMPOUND COMPOSITE	18.11	100.00	100.00		

NOTES: A. METHOD: CALCULATIONS FROM COMPOSITE SURVEY DATA GC-MS ANALYSIS OF GRAB SAMPLE
B. REFERENCES: KVB TEST DATA (REF. 3)
C. APPLICABLE SCC CATEGORIES: 5-01-005-99, 5-02-005-99, 5-03-005-99

REFERENCES

1. "Compilation of Pollutant Emission Factors," Environmental Protection Agency, Research Triangle Park, NC, AP-42, August 1977.

2. Considine, D. M., (ed), "Chemical and Process Technology Encyclopedia," McGraw-Hill Book Co., 1974.

3. Taback, H. J., et al., "Control of Hydrocarbon Emissions from Stationary Sources in the California South Coast Air Basin," Vol. I and II, KVB, Inc., Tustin, CA, June 1978.

AREA SOURCE EMISSIONS

6-01 RESIDENTIAL FUEL

6-06 GASOLINE FUEL

6-07 DIESEL FUEL

6-11 MEASURED VEHICLE MILES

6-13 MISCELLANEOUS BURNING

6-35 SOLVENT USE

6-47 GEOGENIC

6-49 SOLID WASTE

6-01 AREA SOURCE EMISSIONS, FUEL USE

6-01-005 RESIDENTIAL--NATURAL GAS COMBUSTION

Process Description[1]

Natural gas has become one of the major fuels used for home heating in many parts of the country. The primary component of natural gas is methane, with varying amounts of ethane and smaller amounts of nitrogen, helium, and carbon dioxide.

Natural gas fired residential heating units generally use an atmospheric injection type burner. Common excess air rates range from ten to fifteen percent.

Emissions[1,2]

Modern residential natural gas fired home heating units have been designed to the point where essentially complete combustion does take place. However, even though natural gas is considered to be a relatively clean fuel, some emissions can occur from the combustion reaction. For example, improper operating conditions, including poor mixing, insufficient air, etc., may cause large amounts of smoke, carbon monoxide, and hydrocarbons to be produced.

AP-42 presents an 8.0 lbs/10^6 ft^3 (as CH_4) emission factor for natural gas combustion, for both domestic and commercial heating. Also, a population based emission factor of 0.16 tons per 1000 people was developed by KVB based on the 8.0 lbs/10^6 ft^3 (as CH_4) emission factor and the reported residential natural gas consumption for the California South Coast Air Basin population (Ref. 2).

Profile 6-01-005 presents the volatile organic compounds emitted from a natural gas fired home heating unit (Ref. 2).

Controls

Modern burner equipment has generally been perfected to the point where all common fuels can be burned without causing excessive discharges of the products of incomplete combustion. This is basically accomplished through the proper combination of burner and fuel coupled with a proper operation and maintenance program.

Control of volatile organic compounds, which in natural gas fired equipment is considered to be negligible, would therefore basically amount to improving the combustion efficiency of the unit.

Profile Basis[2]

Profile 6-01-005 is based on a hydrocarbon grab sample taken from the exhaust vent of a 125,000 Btu/hr, atmospheric injection type burner, residential natural gas space heating unit. A glass gas collecting bottle was used to contain the flue gas sample.

Data Qualification

Details on the development of the 8 lbs/10^6 ft^3 (as CH_4) hydrocarbon emission factor is discussed in AP-42 (Ref. 1).

Profile 6-01-005 may be used to characterize the volatile organic compounds emitted from a typical residential natural gas fired space heating unit.

DECEMBER 14, 1978 TABLE 6-01-005

AREA SOURCE EMISSIONS, RESIDENTIAL FUEL
NATURAL GAS
DATA CONFIDENCE LEVEL: III

CONTROL DEVICE: NONE
PROCESS MODIFICATION: NONE
KVB PROFILE KEY 0195

LINE NO.	SAROAD CODE	CHEMICAL NAME	MOLECULAR WEIGHT	PERCENT WEIGHT	PERCENT VOLUME	CHEMICAL CLASSIFICATION
1	43201	METHANE	16.04	100.00	100.00	6 METHANE
		TOTAL		100.00	100.00	
	0	COMPOUNDS OF CLASSIFICATION 1	00	.00	.00	
	0	COMPOUNDS OF CLASSIFICATION 2	.00	.00	.00	
	0	COMPOUNDS OF CLASSIFICATION 3	.00	.00	.00	
	0	COMPOUNDS OF CLASSIFICATION 4	.00	.00	.00	
	0	COMPOUNDS OF CLASSIFICATION 5	.00	.00	.00	
	1	COMPOUNDS OF CLASSIFICATION 6	16.04	100.00	100.00	
	0	COMPOUNDS OF CLASSIFICATION 7	.00	.00	.00	
	1	COMPOUND COMPOSITE	16.04	100.00	100.00	

NOTES: A. METHOD: CALCULATIONS FROM COMPOSITE SURVEY DATA GC-MS ANALYSIS OF GRAB SAMPLE
B. REFERENCES: KVB TEST DATA (REF. 2)
C. APPLICABLE SCC CATEGORIES: 6-01-005-00

REFERENCES

1. "Compilation of Pollutant Emission Factors," Environmental Protection Agency, Research Triangle Park, NC, AP-42, August 1977.

2. Taback, H. J., et al., "Control of Hydrocarbon Emissions from Stationary Sources in the California South Coast Air Basin," Vol. I and II, KVB, Inc., Tustin, CA, June 1978.

6-06 AREA SOURCE EMISSIONS, GASOLINE ENGINES

6-06-021 LIGHT DUTY VEHICLES

Process Description[1]

The internal combustion engine in mobile applications is a major source of air pollutant emissions (carbon monoxide, hydrocarbons, and nitrogen oxides). Passenger cars, light duty trucks, and heavy duty trucks comprise the three main categories of highway vehicles (less motorcycles).

Emissions

Emission control technology has changed both the total mass of hydrocarbons being emitted from automobiles and the detailed patterns of these emissions. Vehicle exhaust emissions are determined by the type of control system used, the type of fuel, ambient temperature and pressure, the vehicle history, and the driving patterns. Section 3 of AP-42 presents a discussion on automotive emission factors.

Emissions from automobiles also occur from evaporation of VOC's after operation (profile 6-06-021F), and from evaporation of the gasoline during filling of the gas tank (profile 6-06-021G).

Emission control has essentially eliminated emissions from crankcase blow-by in low mileage cars.[4] Proper maintenance of the system eliminates about 98% of the emissions.[14]

Controls

The composition of automobile exhaust is significantly influenced by a control system. The amount and type of VOC's in pre-emission control automobiles differ from automobiles with controls. Considerable evidence has been presented that the type of control system will also affect hydrocarbon emissions and their pattern. The proportion of methane, having relatively low potential for the formation of oxidant in atmospheric photochemical reactions, is greater in the exhaust of catalytic converter-equipped automobiles (profile 6-06-021B) than in the exhaust of thermal converter or lean-burn operating cars (profile 6-06-021C) or pre-emission control cars (profile 6-06-021D).[5]

The catalyst systems also appear to preferentially remove the more reactive hydrocarbon species.[11] In general, vehicles employing oxidation catalysts for exhaust hydrocarbon control have a lower percentage of unsaturated hydrocarbons than do vehicles without exhaust hydrocarbon control.[4]

Profile Basis

Profile 6-06-021A is a composite of vehicle exhaust emission profiles for controlled and uncontrolled vehicles. The composite was based upon the percentage of unleaded gasoline sold in California as representing the usage of catalyst controlled vehicles (profile 6-06-021B) and the percentage of leaded gasoline, regular and premium (profile 6-06-021D) as representing the usage of uncontrolled vehicles.

Profiles 6-06-021B and C were based on the data found in Reference 3. The species pattern was averaged for 1972-1977 vehicles with catalyst control (17 autos) and with lean-burn control (5 autos) burning a 26% aromatic unleaded fuel. The data which listed 56 different hydrocarbon compounds was reorganized into 20 classifications and adjusted for aldehydes.

Profiles 6-06-021D and E for exhaust hydrocarbons from uncontrolled vehicles were based on data found in Reference 10. The profiles for ten 1970 73 automobiles without controls were separated into the type of fuel tested i.e. a 22% aromatic, leaded fuel corresponding to a premium grade and a 40% aromatic, unleaded fuel. The species patterns were averaged by weight percent into nine major classifications, adjusted to include aldehydes, and expanded into the 21 hydrocarbon species as shown.

Profile 6-06-021F for evaporative emissions is a composite of VOC's emitted after the vehicle has stopped operation, e.g. vapors from the carburetor. Profile 6-06-021F is a composite profile of gasoline vapors lost during the filling of the gas tank.

Data Qualification

Variations in gasoline engine exhaust VOC species occur from vehicle to vehicle depending upon the type of fuel used, the ambient pressure and

temperature, fuel additives, the engine type, the driving pattern, and most importantly, exhaust controls. Research is continuously refining the VOC emission profiles. The profiles should be used in a manner which best represents the driving patterns found in the user's geographical region.

DECEMBER 14, 1978 TABLE 6-06-021A AREA SOURCE EMISSIONS, GASOLINE FUEL, COMPOSITE OF ALL GRADES
LIGHT, HEAVY AND OFF HIGHWAY VEHICLES
DATA CONFIDENCE LEVEL: III

CONTROL DEVICE: COMPOSITE OF CONTROLLED AND UNCONTROLLED VEHICLES
PROCESS MODIFICATION: NONE
KVB PROFILE KEY 0329

LINE NO.	SAROAD CODE	CHEMICAL NAME	MOLECULAR WEIGHT	PERCENT WEIGHT	PERCENT VOLUME	CHEMICAL CLASSIFICATION	
1	43212	N-BUTANE	58.12	2.90	2.19	1	PARAFFIN
2	43220	N-PENTANE	72.15	6.90	4.20	1	PARAFFIN
3	43231	N-HEXANE	86.17	2.50	1.27	1	PARAFFIN
4	43232	N-HEPTANE	100.20	3.00	1.31	1	PARAFFIN
5	43233	N-OCTANE	114.23	12.30	4.72	1	PARAFFIN
6	43235	N-NONANE	128.25	1.00	.35	1	PARAFFIN
7	43203	ETHYLENE	28.05	11.40	17.75	2	OLEFIN
8	43205	PROPYLENE	42.08	7.30	7.61	2	OLEFIN
9	43213	BUTENE	56.10	4.40	3.41	2	OLEFIN
10	43224	1-PENTENE	70.13	2.80	1.75	2	OLEFIN
11	43245	1-HEXENE	84.16	2.10	1.09	2	OLEFIN
12	45102	ISOMERS OF XYLENE	106.16	4.00	1.66	3	AROMATIC
13	45105	ISOMERS OF BUTYLBENZENE	134.21	10	.04	3	AROMATIC
14	45107	ISOMERS OF TRIMETHYLBENZENE	120.19	2.10	.79	3	AROMATIC
15	45202	TOLUENE	92.13	10.90	5.16	3	AROMATIC
16	45203	ETHYLBENZENE	106.16	.80	35	3	AROMATIC
17	43502	FORMALDEHYDE	30.03	3.90	5.68	4	CARBONYL
18	43206	ACETYLENE	26.04	8.70	14.60	5	MISCELLANEOUS
19	43201	METHANE	16.04	8.40	22.91	6	METHANE
20	43202	ETHANE	30.07	70	1.01	7	NON-REACTIVE
21	45201	BENZENE	78.11	3.80	2.14	7	NON-REACTIVE
		TOTAL		100.00	99.99		
	6	COMPOUNDS OF CLASSIFICATION 1	89.39	28.60	14.04		
	5	COMPOUNDS OF CLASSIFICATION 2	38.72	28.00	31.61		
	5	COMPOUNDS OF CLASSIFICATION 3	98.64	17.90	8.00		
	1	COMPOUNDS OF CLASSIFICATION 4	30.03	3.90	5.68		
	1	COMPOUNDS OF CLASSIFICATION 5	26.04	8.70	14.60		
	1	COMPOUNDS OF CLASSIFICATION 6	16.04	8.40	22.91		
	2	COMPOUNDS OF CLASSIFICATION 7	62.71	4.50	3.15		
	21	COMPOUND COMPOSITE	43.84	100.00	99.99		

NOTES: A. METHOD: CALCULATIONS FROM COMPOSITE SURVEY DATA ENGINEERING EVALUATION OF LITERATURE DATA
B. REFERENCES: PROFILES FOR CONTROLLED AND UNCONTROLLED VEHICLES
C. APPLICABLE SCC CATEGORIES: 6-06-021-00, (REFER ALSO TO SUMMARY INDEX)

DECEMBER 14, 1978 TABLE 6-06-021B AREA SOURCE EMISSIONS, GASOLINE FUEL, UNLEADED 26% AROMATIC LIGHT , HEAVY AND OFF HIGHWAY VEHICLES
DATA CONFIDENCE LEVEL: III

CONTROL DEVICE: CATALYST
PROCESS MODIFICATION: NONE
KVB PROFILE KEY 0326

LINE NO.	SAROAD CODE	CHEMICAL NAME	MOLECULAR WEIGHT	PERCENT WEIGHT	PERCENT VOLUME	CHEMICAL CLASSIFICATION	
1	43212	N-BUTANE	58.12	5.50	3.91	1	PARAFFIN
2	43220	N-PENTANE	72.15	14.00	7.98	1	PARAFFIN
3	43231	N-HEXANE	86.17	1.60	.78	1	PARAFFIN
4	43232	N-HEPTANE	100.20	1.90	.78	1	PARAFFIN
5	43233	N-OCTANE	114.23	10.30	3.70	1	PARAFFIN
6	43235	N-NONANE	128.25	.60	.21	1	PARAFFIN
7	43203	ETHYLENE	28.05	9.60	14.07	2	OLEFIN
8	43205	PROPYLENE	42.08	4.90	4.77	2	OLEFIN
9	43213	BUTENE	56.10	2.80	2.06	2	OLEFIN
10	43224	1-PENTENE	70.13	3.30	1.93	2	OLEFIN
11	43245	1-HEXENE	84.16	3.50	1.73	2	OLEFIN
12	45102	ISOMERS OF XYLENE	106.16	3.30	1.28	3	AROMATIC
13	45105	ISOMERS OF BUTYLBENZENE	134.21	.10	.04	3	AROMATIC
14	45107	ISOMERS OF TRIMETHYLBENZENE	120.19	1.80	.62	3	AROMATIC
15	45202	TOLUENE	92.13	8.30	3.70	3	AROMATIC
16	45203	ETHYLBENZENE	106.16	.90	.37	3	AROMATIC
17	43502	FORMALDEHYDE	30.03	4.50	6.17	4	CARBONYL
18	43206	ACETYLENE	26.04	4.70	7.45	5	MISCELLANEOUS
19	43201	METHANE	16.04	13.20	33.87	6	METHANE
20	43202	ETHANE	30.07	2.20	3.00	7	NON-REACTIVE
21	45201	BENZENE	78.11	3.00	1.56	7	NON-REACTIVE
		TOTAL		100.00	99.98		
		6 COMPOUNDS OF CLASSIFICATION 1	80.53	33.90	17.36		
		5 COMPOUNDS OF CLASSIFICATION 2	40.39	24.10	24.56		
		5 COMPOUNDS OF CLASSIFICATION 3	99.16	14.40	6.01		
		1 COMPOUNDS OF CLASSIFICATION 4	30.03	4.50	6.17		
		1 COMPOUNDS OF CLASSIFICATION 5	26.04	4.70	7.45		
		1 COMPOUNDS OF CLASSIFICATION 6	16.04	13.20	33.87		
		2 COMPOUNDS OF CLASSIFICATION 7	46.50	5.20	4.56		
		21 COMPOUND COMPOSITE	41.21	100.00	99.98		

NOTES: A. METHOD: CALCULATIONS FROM COMPOSITE SURVEY DATA ENGINEERING EVALUATION OF LITERATURE DATA
B. REFERENCES: LITERATURE DATA (REF. 3 AND 9)
C. APPLICABLE SCC CATEGORIES: 6-06-021-00, 6-06-022-00, 6-06-023-00

DECEMBER 14, 1978 TABLE 6-06-021C AREA SOURCE EMISSIONS, GASOLINE FUEL, UNLEADED 26% AROMATIC
LIGHT, HEAVY AND OFF HIGHWAY VEHICLES
DATA CONFIDENCE LEVEL: III

CONTROL DEVICE: LEAN-BURN
PROCESS MODIFICATION: NONE
KVB PROFILE KEY 0327

LINE NO.	SAROAD CODE	CHEMICAL NAME	MOLECULAR WEIGHT	PERCENT WEIGHT	PERCENT VOLUME	CHEMICAL CLASSIFICATION	
1	43212	N-BUTANE	58.12	3.80	3.07	1	PARAFFIN
2	43220	N-PENTANE	72.15	9.00	5.90	1	PARAFFIN
3	43231	N-HEXANE	86.17	1.80	.99	1	PARAFFIN
4	43232	N-HEPTANE	100.20	2.20	1.04	1	PARAFFIN
5	43233	N-OCTANE	114.23	8.80	3.63	1	PARAFFIN
6	43235	N-NONANE	128.25	70	.28	1	PARAFFIN
7	43203	ETHYLENE	28.05	15.50	26.10	2	OLEFIN
8	43205	PROPYLENE	42.08	7.80	8.73	2	OLEFIN
9	43213	BUTENE	56.10	4.70	3.96	2	OLEFIN
10	43224	1-PENTENE	70.13	2.80	1.89	2	OLEFIN
11	43245	1-HEXENE	84.16	3.30	1.84	2	OLEFIN
12	45102	ISOMERS OF XYLENE	106.16	4.70	2.08	3	AROMATIC
13	45105	ISOMERS OF BUTYLBENZENE	134.21	10	.05	3	AROMATIC
14	45107	ISOMERS OF TRIMETHYLBENZENE	120.19	2.50	.99	3	AROMATIC
15	45202	TOLUENE	92.13	12.60	6.47	3	AROMATIC
16	45203	ETHYLBENZENE	106.16	.90	.42	3	AROMATIC
17	43502	FORMALDEHYDE	30.03	4.50	7.08	4	CARBONYL
18	43206	ACETYLENE	26.04	6.80	12.32	5	MISCELLANEOUS
19	43201	METHANE	16.04	3.40	10.00	6	METHANE
20	43202	ETHANE	30.07	.70	1.09	7	NON-REACTIVE
21	45201	BENZENE	78.11	3.40	2.08	7	NON-REACTIVE
		TOTAL		100.00	100.01		
	6	COMPOUNDS OF CLASSIFICATION 1	83.45	26.30	14.91		
	5	COMPOUNDS OF CLASSIFICATION 2	37.84	34.10	42.52		
	5	COMPOUNDS OF CLASSIFICATION 3	98.62	20.80	10.01		
	1	COMPOUNDS OF CLASSIFICATION 4	30.03	4.50	7.08		
	1	COMPOUNDS OF CLASSIFICATION 5	26.04	6.80	12.32		
	1	COMPOUNDS OF CLASSIFICATION 6	16.04	3.40	10.00		
	2	COMPOUNDS OF CLASSIFICATION 7	61.59	4.10	3.17		
	21	COMPOUND COMPOSITE	47.29	100.00	100.01		

NOTES: A. METHOD: CALCULATIONS FROM COMPOSITE SURVEY DATA ENGINEERING EVALUATION OF LITERATURE DATA
B. REFERENCES: LITERATURE DATA (REF. 3 AND 9)
C. APPLICABLE SCC CATEGORIES: 6-06-021-00, 6-06-022-00, 6-06-023-00

DECEMBER 14, 1978 TABLE 6-06-021D AREA SOURCE EMISSIONS, GASOLINE FUEL, LEADED PREMIUM 22% AROMATI
LIGHT, HEAVY AND OFF HIGHWAY VEHICLES
DATA CONFIDENCE LEVEL: III

CONTROL DEVICE: NONE
PROCESS MODIFICATION: NONE
KVB PROFILE KEY 0328

LINE NO.	SAROAD CODE	CHEMICAL NAME	MOLECULAR WEIGHT	PERCENT WEIGHT	PERCENT VOLUME	CHEMICAL CLASSIFICATION	
1	43212	N-BUTANE	58.12	2.50	1.90	1	PARAFFIN
2	43220	N-PENTANE	72.15	5.80	3.53	1	PARAFFIN
3	43231	N-HEXANE	86.17	2.60	1.32	1	PARAFFIN
4	43232	N-HEPTANE	100.20	3.20	1.41	1	PARAFFIN
5	43233	N-OCTANE	114.23	12.60	4.85	1	PARAFFIN
6	43235	N-NONANE	128.25	1.00	.35	1	PARAFFIN
7	43203	ETHYLENE	28.05	11.70	18.40	2	OLEFIN
8	43205	PROPYLENE	42.08	7.70	8.08	2	OLEFIN
9	43213	BUTENE	56.10	4.60	3.62	2	OLEFIN
10	43224	1-PENTENE	70.13	2.70	1.72	2	OLEFIN
11	43245	1-HEXENE	84.16	1.80	.93	2	OLEFIN
12	45102	ISOMERS OF XYLENE	106.16	4.20	1.77	3	AROMATIC
13	45105	ISOMERS OF BUTYLBENZENE	134.21	.10	.04	3	AROMATIC
14	45107	ISOMERS OF TRIMETHYLBENZENE	120.19	2.20	.79	3	AROMATIC
15	45202	TOLUENE	92.13	11.30	5.43	3	AROMATIC
16	45203	ETHYLBENZENE	106.16	.80	.35	3	AROMATIC
17	43502	FORMALDEHYDE	30.03	3.80	5.60	4	CARBONYL
18	43206	ACETYLENE	26.04	9.30	15.75	5	MISCELLANEOUS
19	43201	METHANE	16.04	7.70	21.18	6	METHANE
20	43202	ETHANE	30.07	.50	.75	7	NON-REACTIVE
21	45201	BENZENE	78.11	3.90	2.21	7	NON-REACTIVE
		TOTAL		100.00	99.98		
	6	COMPOUNDS OF CLASSIFICATION 1	91.25	27.70	13.36		
	5	COMPOUNDS OF CLASSIFICATION 2	38.42	28.50	32.75		
	5	COMPOUNDS OF CLASSIFICATION 3	98.53	18.60	8.38		
	1	COMPOUNDS OF CLASSIFICATION 4	30.03	3.80	5.60		
	1	COMPOUNDS OF CLASSIFICATION 5	26.04	9.30	15.75		
	1	COMPOUNDS OF CLASSIFICATION 6	16.04	7.70	21.18		
	2	COMPOUNDS OF CLASSIFICATION 7	65.94	4.40	2.96		
	21	COMPOUND COMPOSITE	44.17	100.00	99.98		

NOTES: A. METHOD: CALCULATIONS FROM COMPOSITE SURVEY DATA ENGINEERING EVALUATION OF LITERATURE DATA
B. REFERENCES: LITERATURE DATA (REF. 3, 9 AND 10)
C. APPLICABLE SCC CATEGORIES: 6-06-021-00, 6-06-022-00, 6-06-023-00

DECEMBER 14, 1978 TABLE 6-06-021E AREA SOURCE EMISSIONS, GASOLINE FUEL, UNLEADED 40% AROMATIC
LIGHT, HEAVY AND OFF HIGHWAY VEHICLES
DATA CONFIDENCE LEVEL: III

CONTROL DEVICE: NONE
PROCESS MODIFICATION: NONE
KVB PROFILE KEY 0335

LINE NO.	SAROAD CODE	CHEMICAL NAME	MOLECULAR WEIGHT	PERCENT WEIGHT	PERCENT VOLUME	CHEMICAL CLASSIFICATION	
1	43212	N-BUTANE	58.12	2.20	1.87	1	PARAFFIN
2	43220	N-PENTANE	72.15	5.30	3.65	1	PARAFFIN
3	43231	N-HEXANE	86.17	1.80	1.03	1	PARAFFIN
4	43232	N-HEPTANE	100.20	2.30	1.13	1	PARAFFIN
5	43233	N-OCTANE	114.23	8.90	3.84	1	PARAFFIN
6	43235	N-NONANE	128.25	.70	.30	1	PARAFFIN
7	43203	ETHYLENE	28.05	9.20	16.16	2	OLEFIN
8	43205	PROPYLENE	42.08	5.10	5.96	2	OLEFIN
9	43213	BUTENE	56.10	3.00	2.66	2	OLEFIN
10	43224	1-PENTENE	70.13	1.80	1.28	2	OLEFIN
11	43245	1-HEXENE	84.16	1.60	.94	2	OLEFIN
12	45102	ISOMERS OF XYLENE	106.16	7.80	3.65	3	AROMATIC
13	45105	ISOMERS OF BUTYLBENZENE	134.21	.20	.10	3	AROMATIC
14	45107	ISOMERS OF TRIMETHYLBENZENE	120.19	4.20	1.72	3	AROMATIC
15	45202	TOLUENE	92.13	21.10	11.28	3	AROMATIC
16	45203	ETHYLBENZENE	106.16	1.50	.69	3	AROMATIC
17	43502	FORMALDEHYDE	30.03	4.50	7.39	4	CARBONYL
18	43206	ACETYLENE	26.04	7.90	14.93	5	MISCELLANEOUS
19	43201	METHANE	16.04	5.80	17.83	6	METHANE
20	43202	ETHANE	30.07	.40	.64	7	NON-REACTIVE
21	45201	BENZENE	78.11	4.70	2.96	7	NON-REACTIVE
		TOTAL		100.00	100.01		
	6	COMPOUNDS OF CLASSIFICATION 1	88.93	21.20	11.82		
	5	COMPOUNDS OF CLASSIFICATION 2	37.86	20.70	27.00		
	5	COMPOUNDS OF CLASSIFICATION 3	98.63	34.80	17.44		
	1	COMPOUNDS OF CLASSIFICATION 4	30.03	4.50	7.39		
	1	COMPOUNDS OF CLASSIFICATION 5	26.04	7.90	14.93		
	1	COMPOUNDS OF CLASSIFICATION 6	16.04	5.80	17.83		
	2	COMPOUNDS OF CLASSIFICATION 7	69.57	5.10	3.60		
	21	COMPOUND COMPOSITE	49.40	100.00	100.01		

NOTES: A. METHOD: CALCULATIONS FROM COMPOSITE SURVEY DATA ENGINEERING EVALUATION OF LITERATURE DATA
B. REFERENCES: LITERATURE DATA (REF. 3, 9 AND 10)
C. APPLICABLE SCC CATEGORIES: 6-06-021-00, 6-06-022-00, 6-06-023-00

DECEMBER 14, 1978 TABLE 6-06-021F AREA SOURCE EMISSIONS, EVAPORATION
LIGHT, HEAVY AND OFF HIGHWAY VEHICLES
DATA CONFIDENCE LEVEL: II

CONTROL DEVICE: NONE
PROCESS MODIFICATION: NONE
KVB PROFILE KEY 0336

LINE NO.	SAROAD CODE	CHEMICAL NAME	MOLECULAR WEIGHT	PERCENT WEIGHT	PERCENT VOLUME	CHEMICAL CLASSIFICATION	
1	43204	PROPANE	44.09	1.80	2.87	1	PARAFFIN
2	43212	N-BUTANE	58.12	19.70	23.71	1	PARAFFIN
3	43214	ISOBUTANE	58.12	6.60	7.97	1	PARAFFIN
4	43220	N-PENTANE	72.15	39.40	38.18	1	PARAFFIN
5	43231	N-HEXANE	86.17	13.50	10.98	1	PARAFFIN
6	43232	N-HEPTANE	100.20	2.80	1.96	1	PARAFFIN
7	43233	N-OCTANE	114.23	2.00	1.26	1	PARAFFIN
8	43235	N-NONANE	128.25	.20	.14	1	PARAFFIN
9	43213	BUTENE	56.10	1.80	2.24	2	OLEFIN
10	43224	1-PENTENE	70.13	6.30	6.29	2	OLEFIN
11	45102	ISOMERS OF XYLENE	106.16	1.60	1.05	3	AROMATIC
12	45104	ISOMERS OF ETHYLTOLUENE	120.19	.50	.28	3	AROMATIC
13	45105	ISOMERS OF BUTYLBENZENE	134.21	.10	.07	3	AROMATIC
14	45107	ISOMERS OF TRIMETHYLBENZENE	120.19	.40	.21	3	AROMATIC
15	45202	TOLUENE	92.13	2.10	1.61	3	AROMATIC
16	43202	ETHANE	30.07	.10	.21	7	NON-REACTIVE
17	45201	BENZENE	78.11	1.10	.98	7	NON-REACTIVE
		TOTAL		100.00	100.01		
	8	COMPOUNDS OF CLASSIFICATION 1	69.22	86.00	87.07		
	2	COMPOUNDS OF CLASSIFICATION 2	66.45	8.10	8.53		
	5	COMPOUNDS OF CLASSIFICATION 3	101.89	4.70	3.22		
	0	COMPOUNDS OF CLASSIFICATION 4	.00	.00	.00		
	0	COMPOUNDS OF CLASSIFICATION 5	.00	.00	.00		
	0	COMPOUNDS OF CLASSIFICATION 6	.00	.00	.00		
	2	COMPOUNDS OF CLASSIFICATION 7	69.63	1.20	1.19		
	17	COMPOUND COMPOSITE	70.04	100.00	100.01		

NOTES: A. METHOD: CALCULATIONS FROM COMPOSITE SURVEY DATA ENGINEERING EVALUATION OF LITERATURE DATA
B. REFERENCES: LITERATURE DATA (REF. 7)
C. APPLICABLE SCC CATEGORIES: 6-06-021-00, 6-06-022-00, 6-06-023-00

DECEMBER 14, 1978 TABLE 6-06-021G AREA SOURCE EMISSIONS, GASOLINE VAPOR, COMPOSITE
LIGHT, HEAVY AND OFF HIGHWAY VEHICLES
DATA CONFIDENCE LEVEL: II

CONTROL DEVICE: NONE
PROCESS MODIFICATION: NONE
KVB PROFILE KEY 0337

LINE NO.	SAROAD CODE	CHEMICAL NAME	MOLECULAR WEIGHT	PERCENT WEIGHT	PERCENT VOLUME	CHEMICAL CLASSIFICATION	
1	43204	PROPANE	44.09	.10	.19	1	PARAFFIN
2	43212	N-BUTANE	58.12	2.20	3.59	1	PARAFFIN
3	43214	ISOBUTANE	58.12	.50	.85	1	PARAFFIN
4	43220	N-PENTANE	72.15	12.20	15.96	1	PARAFFIN
5	43231	N-HEXANE	86.17	16.30	17.85	1	PARAFFIN
6	43232	N-HEPTANE	100.20	9.30	8.78	1	PARAFFIN
7	43233	N-OCTANE	114.23	10.10	8.31	1	PARAFFIN
8	43235	N-NONANE	128.25	1.80	1.32	1	PARAFFIN
9	43238	N-DECANE	142.28	2.60	1.70	1	PARAFFIN
10	43213	BUTENE	56.10	.40	.66	2	OLEFIN
11	43224	1-PENTENE	70.13	2.50	3.40	2	OLEFIN
12	45102	ISOMERS OF XYLENE	106.16	13.50	11.99	3	AROMATIC
13	45104	ISOMERS OF ETHYLTOLUENE	120.19	6.50	5.10	3	AROMATIC
14	45105	ISOMERS OF BUTYLBENZENE	134.21	4.40	3.12	3	AROMATIC
15	45107	ISOMERS OF TRIMETHYLBENZENE	120.19	5.50	4.34	3	AROMATIC
16	45202	TOLUENE	92.13	9.70	9.92	3	AROMATIC
17	45201	BENZENE	78.11	2.40	2.93	7	NON-REACTIVE
		TOTAL		100.00	100.01		
	9	COMPOUNDS OF CLASSIFICATION 1	88.75	55.10	58.55		
	2	COMPOUNDS OF CLASSIFICATION 2	67.85	2.90	4.06		
	5	COMPOUNDS OF CLASSIFICATION 3	108.50	39.60	34.47		
	0	COMPOUNDS OF CLASSIFICATION 4	.00	.00	.00		
	0	COMPOUNDS OF CLASSIFICATION 5	.00	.00	.00		
	0	COMPOUNDS OF CLASSIFICATION 6	.00	.00	.00		
	1	COMPOUNDS OF CLASSIFICATION 7	78.11	2.40	2.93		
	17	COMPOUND COMPOSITE	94.40	100.00	100.01		

NOTES: A. METHOD: CALCULATIONS FROM COMPOSITE SURVEY DATA ENGINEERING EVALUATION OF LITERATURE DATA
B. REFERENCES: LITERATURE DATA (REF. 7)
C. APPLICABLE SCC CATEGORIES: 6-06-021-00, 6-06-022-00, 6-06-023-00

REFERENCES

1. "Compilation of Pollutant Emission Factors," Environmental Protection Agency, Research Triangle Park, NC AP-42, August 1977.

2. Taback, H. J., et al., "Control of Hydrocarbon Emissions from Stationary Sources in the California South Coast Air Basin," Vol. I & II, KVB, Inc., Tustin, CA, June 1978.

3. Black, F. and High, L., "Automotive Hydrocarbon Emission Patterns and the Measurements of Non-methane Hydrocarbon Emission Rates," Society of Automotive Engineers, Paper No. 770144, February 28-March 4, 1977.

4. Black, F., "The Impact of Emission Control Technology on Passenger Car Hydrocarbon Emission Rates and Patterns," International Conference on Photochemical Oxidant Pollution and its Control Proceeding: Volume II, Environmental Protection Agency, EPA-600/3-77-001b, January 1977.

5. Black, F. M. and Bradow, R. L., "Patterns of Hydrocarbon Emissions from 1975 Production Cars," Environmental Protection Agency.

6. Black, F., Personal Communication to EPA, Mobile Source Group, December 1978, "Unknowns" in profile split 80% paraffin and 20% olefin.

7. Mayrsohn, H. and Crabtree, J., Source Reconciliation of Atmospheric Hydrocarbons, California Air Resources Board, March 1975.

8. Mayrsohn, H. and Crabtree, J., Source Reconciliation of Atmospheric Hdyrocarbons, California Air Resources Board, July 1975.

9. U.S. Bureau of Mines, "Aldehydes and Reactive Organic Emissions from Motor Vehicles, Part I - Advanced Automotive Control Systems Vehicles," EPA-IAG-0188(D), March 1973.

10. U.S. Bureau of Mines, "Aldehyde and Reactive Organic Emissions from Motor Vehicles, Part II - Characterization of Emissions from 1970 through 1973 Model Vehicles, MSPCP-IAG-001, March 1973.

11. Powers, T. R., "Effect of Hydrocarbon Composition on Oxidant-Hydrocarbon Relationships, Phase I. Exhaust Blends from Non-Catalytic and Catalyst Equipped Vehicles," EPA 600/3-77-109a. September 1977.

12. Ashby, H. A., et al., "Vehicle Emissions Summer to Winter," Society of Automotive Engineers, Paper No. 741053, October 21-25, 1974.

13. Koehl, N. J., "Mathematical Models for Prediction of Fuel Tank and Carburetor Evaporation Losses," Society of Automotive Engineers, Paper No. 690506, May 19-23, 1969.

14. Hurn, R. W., Cox, F. W. and Allsup, J. R., "Effect of Gasoline Additives on Gaseous Emissions, Part II," Environmental Protection Agency, EPA 600/2-76-026, February 1976.

15. Automotive Environmental Systems, Inc., "Accelerated Decay of Non-Fuel Evaporative Emissions," Task No. 1, Environmental Protection Agency, EPA-460/3-76-026, August 1976.

16. Crabtree, J., Personal communication to CARB, December 1978, Gasoline sales in 1974, split 13% unleaded and 87% leaded.

6-07 AREA SOURCE EMISSIONS, DIESEL ENGINES

6-07-021 LIGHT DUTY VEHICLES

Process Description[1]

In comparison with the conventional, "uncontrolled," gasoline-powered, spark ignited, automotive engine, the uncontrolled diesel automotive engine is a low pollution power plant. On a grams per mile basis, uncontrolled diesel engines emit less carbon monoxide, hydrocarbons, and somewhat less nitrogen oxides than comparable uncontrolled gasoline engines. A small number of light duty, diesel-powered vehicles are in use in the United States. In contrast, a relatively large number of heavy-duty diesel engines used in trucks and buses are in current use throughout the United States. Diesel engines in any application demonstrate operating principles that are significantly different from those of the gasoline engine.

Emissions

VOC emission species from diesel engines are generally characterized by the diesel fuel species. The C_1-C_{10} hydrocarbons result almost entirely from the combustion process, the cracking of higher molecular weight materials. The C_{10}-C_{40} hydrocarbons result from uncombusted fuel, C_{10}-C_{25}, and lubricants, C_{15}-C_{40}.[2] The diesel engine produces far more aldehydes than does the gasoline engine.[3]

The vapor pressure of diesel fuels under ambient conditions is so low that evaporative emissions can be ignored.[2]

The quantity and scope of diesel exhaust test data is rather limited when compared with that of gasoline exhaust studies, although presentation of current test results is scheduled for early 1979 (Ref. 10). An explanation of light and heavy duty diesel exhaust emission factors and the variables affecting them are presented in AP-42 (Ref. 1).

Controls[4]

Most of the current diesel exhaust emissions studies are concerned with emission controls through either engine design or the use of fuel additives. Catalytic reactors appear to also be a viable control option.

Profile Basis

The development of a composite light and heavy duty diesel powered vehicle exhaust VOC specie emission profile was based on an engineering evaluation of pertinent literature (Ref. 2-8). Profile 6-07-021 was based on data taken from Ref. 7, the weight % average of three diesel engines and expanded to the 18 hydrocarbon classes utilized. The test data was adjusted for aldehydes based upon Ref. 8 data. Because diesel VOC emissions closely relate to the uncombusted fuel burned, it was assumed that C_4-C_{40} followed the composition of the fuel used, i.e. 66.2% paraffin, 32.5% aromatic and 1.3% olefin. Paraffins C_{10}-C_{40} were represented by specie n-pentadecane, and aromatics C_{10} and above were represented by naphtha.

Data Qualification

Variations in diesel engine exhaust VOC specie emission may occur from vehicle to vehicle depending on such variables as engine size and type, duty cycle, fuel (aromatic content), and age.

New emissions information is being continually developed and the profile user should be informed of any significant developments.

DECEMBER 14, 1978 TABLE 6-07-021 AREA SOURCE EMISSIONS, DIESEL FUEL, 32 % AROMATIC
LIGHT, HEAVY AND OFF HIGHWAY VEHICLES
DATA CONFIDENCE LEVEL: III

CONTROL DEVICE: NONE
PROCESS MODIFICATION: NONE
KVB PROFILE KEY 0330

LINE NO.	SAROAD CODE	CHEMICAL NAME	MOLECULAR WEIGHT	PERCENT WEIGHT	PERCENT VOLUME	CHEMICAL CLASSIFICATION	
1	43212	N-BUTANE	58.12	3.20	3.07	1	PARAFFIN
2	43220	N-PENTANE	72.15	1.80	1.40	1	PARAFFIN
3	43231	N-HEXANE	86.17	1.40	.89	1	PARAFFIN
4	43232	N-HEPTANE	100.20	.40	.22	1	PARAFFIN
5	43233	N-OCTANE	114.23	.40	.22	1	PARAFFIN
6	43235	N-NONANE	128.25	.40	.17	1	PARAFFIN
7	43260	N-PENTADECANE	212.41	35.10	9.21	1	PARAFFIN
8	43203	ETHYLENE	28.05	10.70	21.33	2	OLEFIN
9	43205	PROPYLENE	42.08	4.00	5.30	2	OLEFIN
10	45101	NAPHTHA	114.00	17.60	8.60	3	AROMATIC
11	45102	ISOMERS OF XYLENE	106.16	.30	.17	3	AROMATIC
12	45107	ISOMERS OF TRIMETHYLBENZENE	120.19	.20	.11	3	AROMATIC
13	45202	TOLUENE	92.13	1.80	1.12	3	AROMATIC
14	43502	FORMALDEHYDE	30.03	12.20	22.67	4	CARBONYL
15	43206	ACETYLENE	26.04	3.80	8.15	5	MISCELLANEOUS
16	43201	METHANE	16.04	4.40	15.30	6	METHANE
17	43202	ETHANE	30.07	.40	.73	7	NON-REACTIVE
18	45201	BENZENE	78.11	1.90	1.34	7	NON-REACTIVE
		TOTAL		100.00	100.00		

7 COMPOUNDS OF CLASSIFICATION 1	156.88	42.70	15.18
2 COMPOUNDS OF CLASSIFICATION 2	30.84	14.70	26.63
4 COMPOUNDS OF CLASSIFICATION 3	111.49	19.90	10.00
1 COMPOUNDS OF CLASSIFICATION 4	30.03	12.20	22.67
1 COMPOUNDS OF CLASSIFICATION 5	26.04	3.80	8.15
1 COMPOUNDS OF CLASSIFICATION 6	16.04	4.40	15.30
2 COMPOUNDS OF CLASSIFICATION 7	61.17	2.30	2.07
18 COMPOUND COMPOSITE	55.83	100.00	100.00

NOTES: A. METHOD: CALCULATIONS FROM COMPOSITE SURVEY DATA ENGINEERING EVALUATION OF LITERATURE DATA
B. REFERENCES: LITERATURE DATA (REF. 2 AND 3)
C. APPLICABLE SCC CATEGORIES: 6-07-021-00, 6-07-022-00, 6-07-023-00

REFERENCES

1. "Compilation of Pollutant Emission Factors," Environmental Protection Agency, Research Triangle Park, NC, AP-42, August 1977.

2. Black, F. and High, L., "Diesel Hydrocarbon Emission - Particulate and Gas Phase," Symposium of Diesel Particulate Emission Measurement and Characterization, May 1978.

3. Springer, K. J. and Baines, T. M., "Emissions from Diesel Versions of Production Passenger Cars," Society of Automotive Engineers, Paper No. 770818, September 26-30, 1977.

4. Cavagnaro, Diane M., "Diesel Exhaust Emission Control for Motor Vehicles," National Technical Information Service, Springfield, VA.

5. Springer, K., "Investigation of Diesel Powered Vehicle Emissions VII," EPA 460/3-76-034, February 1977.

6. Taback, H. J. and Sonnichsen, T. W., "Control of Hydrocarbon Emisions from Stationary Sources in the California South Coast Air Basin--Final Report, Vol. I & II, KVB, Inc., Tustin, CA, June 1978.

7. Braddock, J. M. and Bradow, R. L., "Emission Patterns of Diesel-Powered Passenger Cars," Society of Automotive Engineers, Paper No. 750682, June 3-5, 1975.

8. Braddock, J. N. and Gabele, P. A., "Emission Patterns of Diesel-Powered Passenger Cars--Part II," Society of Automotive Engineers, Paper No. 770168, Feb. 28 - March 4, 1977.

9. Hare, C. T., "Methodology for Determining Fuel Effects on Diesel Particulate Emissions," Environmental Protection Agency, EPA-650/2-75-056, March 1975.

10. Black, F., Personal communication to EPA, Mobile Source Group, December 1978.

6-11 AREA SOURCE EMISSIONS, MEASURED VEHICLE MILES

6-11-061 GASOLINE/DIESEL

Profile Basis[1]

Profile 6-11-061 is a composite of vehicle emissions taken during the morning rush hour beneath a busy Los Angeles tunnel. The exhaust profile was derived from a population of about 2000 vehicles (automobiles, trucks, and buses) accelerating, cruising, and decelerating in the 45-55 mph speed range. The data was adjusted for aldehydes and methane.

This profile was designed to assist individuals interested in compiling approximate highway vehicle VOC specie emissions data based on total vehicle miles traveled. Total hydrocarbon emission rates (g/mi) can be calculated based on information contained in Section 3 of AP-42.

DECEMBER 14, 1978 TABLE 6-11-061 AREA SOURCE EMISSIONS, MEASURED VEHICLE MILES
COMPOSITE OF GASOLINE AND DIESEL FUELS, EXHAUST EMISSIONS
DATA CONFIDENCE LEVEL: III

CONTROL DEVICE: COMPOSITE OF CONTROLLED AND UNCONTROLLED VEHICLES
PROCESS MODIFICATION: NONE
KVB PROFILE KEY 0325

LINE NO.	SAROAD CODE	CHEMICAL NAME	MOLECULAR WEIGHT	PERCENT WEIGHT	PERCENT VOLUME	CHEMICAL CLASSIFICATION	
1	43212	N-BUTANE	58.12	3.00	2.47	1	PARAFFIN
2	43220	N-PENTANE	72.15	7.50	4.93	1	PARAFFIN
3	43231	N-HEXANE	86.17	6.90	3.79	1	PARAFFIN
4	43232	N-HEPTANE	100.20	4.00	1.90	1	PARAFFIN
5	43233	N-OCTANE	114.23	4.70	1.94	1	PARAFFIN
6	43235	N-NONANE	128.25	1.40	.52	1	PARAFFIN
7	43238	N-DECANE	142.28	2.40	.81	1	PARAFFIN
8	43203	ETHYLENE	28.05	6.40	10.81	2	OLEFIN
9	43205	PROPYLENE	42.08	2.90	3.27	2	OLEFIN
10	43213	BUTENE	56.10	3.10	2.61	2	OLEFIN
11	43224	1-PENTENE	70.13	2.60	1.75	2	OLEFIN
12	45102	ISOMERS OF XYLENE	106.16	10.60	4.74	3	AROMATIC
13	45104	ISOMERS OF ETHYLTOLUENE	120.19	5.60	2.23	3	AROMATIC
14	45105	ISOMERS OF BUTYLBENZENE	134.21	2.40	.85	3	AROMATIC
15	45107	ISOMERS OF TRIMETHYLBENZENE	120.19	5.40	2.13	3	AROMATIC
16	45202	TOLUENE	92.13	7.40	3.79	3	AROMATIC
17	43502	FORMALDEHYDE	30.03	4.50	7.11	4	CARBONYL
18	43206	ACETYLENE	26.04	5.20	9.48	5	MISCELLANEOUS
19	43201	METHANE	16.04	11.00	32.53	6	METHANE
20	43202	ETHANE	30.07	.50	.81	7	NON-REACTIVE
21	45201	BENZENE	78.11	2.50	1.52	7	NON-REACTIVE
		TOTAL		100.00	99.99		
	7	COMPOUNDS OF CLASSIFICATION 1	86.78	29.90	16.36		
	4	COMPOUNDS OF CLASSIFICATION 2	38.50	15.00	18.44		
	5	COMPOUNDS OF CLASSIFICATION 3	108.48	31.40	13.74		
	1	COMPOUNDS OF CLASSIFICATION 4	30.03	4.50	7.11		
	1	COMPOUNDS OF CLASSIFICATION 5	26.04	5.20	9.48		
	1	COMPOUNDS OF CLASSIFICATION 6	16.04	11.00	32.53		
	2	COMPOUNDS OF CLASSIFICATION 7	61.41	3.00	2.33		
	21	COMPOUND COMPOSITE	47.46	100.00	99.99		

NOTES: A. METHOD: CALCULATIONS FROM COMPOSITE SURVEY DATA ENGINEERING EVALUATION OF GASOLINE AND DIESEL PROFILES
B. REFERENCES: LITERATURE DATA (REF. 1)
C. APPLICABLE SCC CATEGORIES: 6-11-061-00, 6-11-062-00, 6-11-063-00, 6-11-064-00

REFERENCES

1. Mayrsohn, H. and Crabtree, J., Source Reconciliation of Atmospheric Hydrocarbons, California Air Resources Board, March 1975.

2. Mayrsohn, H. and Crabtree, J., Source Reconciliation of Atmospheric Hydrocarbons in the South Coast Air Basin, 1975, California Air Resources Board, December 1976.

6-13-081 FOREST FIRES

Process Description[1]

A forest "wildfire" is a large-scale natural combustion process that consumes various ages, sizes, and types of botanical specimens growing outdoors in a defined geographical area. Consequently, wildfires are potential sources of large amounts of air pollutants that should be considered when trying to relate emissions to air quality.

The size and intensity (or even the occurrence) of a wildfire is directly dependent on such variables as the local meteorological conditions, the species of trees, and their moisture content, and the weight of consumable fuel per acre (fuel loading). Once a fire begins, the dry combustible material (usually small undergrowth and forest floor litter) is consumed first, and if the energy release is large and of sufficient duration, the drying of green, live material occurs with subsequent burning of this material as well as the larger dry material. Under proper environmental and fuel conditions, this process may initiate a chain reaction that results in a widespread conflagration.

Emissions[2,3]

Forest fire emissions are a complex mixture of solids, liquids, and gases. Carbon dioxide and water vapor constitute over 90% of the total mass emitted. Emission factors have been reported in the range from 10 to 40 lb/ton fuel burned depending on fuel and fire type and fuel loading. Methane, ethylene, and acetylene are the predominant species in the group, comprising as much as 50% of the total hydrocarbon fraction when determined by flame ionization detection methods. Lesser amounts of ethane, propane, propylene, methyl and ethyl acetylene, butene and butane isomers have been found. For more detailed information on hydrocarbon emission factors to forest wildfires, consult AP42, Section 11.1, and Reference 3.

Controls[3]

Of course, the most effective means of controlling wildfire emissions is to prevent the occurrence of a forest fire through various means available to the forest ranger. A frequently used technique for reducing

wildfire occurrence is "prescribed" or hazard reduction" burning. This type of managed burn involves combustion of litter and underbrush in order to prevent fuel buildup on the forest floor and thus reduce the danger of a wildfire. Although some air pollution is generated by this preventative burning, the net amount is believed to be a relatively smaller quantity than that produced under a wildfire situation. For more detailed information on the methods and benefits of prescribed burning, consult Reference 3.

Profile Basis[4]

The source of information for the profile originated from a study (Ref. 4) concerned with the emissions generated from slash burning. Nine untreated fuel beds were constructed from ponderosa logging slash collected from the San Bernardino National Forest and burned under lab conditions at the U.S. Forest Service Fire Laboratory at Riverside, California. Although small in size, these fuel beds were the equivalent of a 50 ton/acre fuel loading which is similar in size and distribution to actual logging slash.

Combustion gases were filtered and collected in 250 cc glass cylinders for analysis by chromatography.

The unidentified fraction (25% vol.) is believed to be composed of organic acids, aldehydes, ketones, phenols, and heterocyclic compounds. For more detailed information, consult Reference 4.

Data Qualification

Although these tests were run under laboratory conditions, the fuel beds constructed are similar in fuel loading and geometry to actual logging slash areas. Realizing all of the variations that can and do occur in fuel type and fuel loading from one area to another, this profile is construed to be the basis from which hydrocarbon emissions from areas where ponderosa pine predominate. Further research into the effects burning other species of trees and foliage would have on the present profile would need to be made if used where this condition does exist.

DECEMBER 14, 1978 TABLE 6-13-081 AREA SOURCE EMSISSIONS, MISCELLANEOUS BURNING
FORREST FIRES
DATA CONFIDENCE LEVEL: III

CONTROL DEVICE: NONE
PROCESS MODIFICATION: NONE
KVB PROFILE KEY 0307

LINE NO.	SAROAD CODE	CHEMICAL NAME	MOLECULAR WEIGHT	PERCENT WEIGHT	PERCENT VOLUME	CHEMICAL CLASSIFICATION	
1	43122	ISOMERS OF PENTANE	72.15	.15	.08	1	PARAFFIN
2	43204	PROPANE	44.09	.35	.31	1	PARAFFIN
3	43212	N-BUTANE	58.12	.24	.15	1	PARAFFIN
4	43214	ISOBUTANE	58.12	.11	.08	1	PARAFFIN
5	43120	ISOMERS OF BUTENE	56.10	.92	.62	2	OLEFIN
6	43203	ETHYLENE	28.05	19.11	26.20	2	OLEFIN
7	43205	PROPYLENE	42.08	3.93	3.58	2	OLEFIN
8	43213	BUTENE	56.10	.81	.54	2	OLEFIN
9	43218	1,3-BUTADIENE	54.09	.52	.38	2	OLEFIN
10	43223	3-METHYL-1-BUTENE	70.14	.17	.08	2	OLEFIN
11	43000	UNIDENTIFIED HYDROCARBONS	86.00	44.59	19.97	5	MISCELLANEOUS
12	43206	ACETYLENE	26.04	8.40	12.43	5	MISCELLANEOUS
13	43209	METHYLACETYLENE	40.06	.41	.38	5	MISCELLANEOUS
14	43201	METHANE	16.04	9.82	23.55	6	METHANE
15	43202	ETHANE	30.07	10.47	13.39	7	NON-REACTIVE
		TOTAL		100.00	101.74		
	4	COMPOUNDS OF CLASSIFICATION 1	52.92	.85	.62		
	6	COMPOUNDS OF CLASSIFICATION 2	31.11	25.46	31.40		
	0	COMPOUNDS OF CLASSIFICATION 3	.00	.00	.00		
	0	COMPOUNDS OF CLASSIFICATION 4	.00	.00	.00		
	3	COMPOUNDS OF CLASSIFICATION 5	62.73	53.40	32.78		
	1	COMPOUNDS OF CLASSIFICATION 6	16.04	9.82	23.55		
	1	COMPOUNDS OF CLASSIFICATION 7	30.07	10.47	13.39		
	15	COMPOUND COMPOSITE	37.81	100.00	101.74		

NOTES: A. METHOD: CALCULATIONS FROM COMPOSITE SURVEY DATA ENGINEERING EVALUATION OF LITERATURE DATA
B. REFERENCES: LITERATURE DATA (REF. 4)
C. APPLICABLE SCC CATEGORIES: 6-13-081-00

REFERENCES

1. "Compilation of Pollutant Emission Factors," Environmental Protection Agency, Research Triangle Park, NC, AP-42, August 1977.

2. McMahon, C. K. and Ryan P. W., "Some Chemical and Physical Characteristics of Emissions from Forest Fires," paper presented at 69th APCA Meeting, Portland, OR, June 27 - July 1, 1976.

3. Southern Forestry Smoke Management Guidebook, by Southern Forest Fire Laboratory personnel, Southeastern Forest Experiment Station, Asheville, NC, and Southern Forest Fire Laboratory, Macon, Georgia, December 1977.

4. Sandberg, D. V. et al., "Emissions from Slash Burning and the Influence of Flame Retardant Chemicals," J. Air Poll Cont Assoc, Vol. 25, No. 3, March 1975.

6-35 AREA SOURCE EMISSION, SOLVENT USE

6-35-103 ARCHITECTURAL SURFACE COATINGS

Process Description[1]

Architectural coatings are paints and other coatings that are applied to stationary surfaces, structures, and their appurtenances. Architectural coatings include air-dried coatings that are applied by spray, brush, or roller to surfaces and structures such as buildings, pavements, or curbs, but do not include industrial coatings, which are generally applied by a wider variety of methods, commonly oven cured, and used on items made in factories. The major users of architectural coatings are homeowners and painting contractors.

Emissions[1,2]

When architectural coatings are applied with solvents, the solvents must evaporate into the atmosphere so that the coating can form a film or barrier. The evaporation of these solvents along with the associated use of solvents for thinning and cleaning up generate organic solvent emissions that represent a substantial portion of all organic vapors present in a community's atmosphere and therefore are a significant area source of VOC emissions.

An estimate of these emissions from work performed in Southern California for 1976 is 3.5 tons/1000 people/year (Refs. 1 and 2). In Southern California the emission of solvent vapors has been controlled since 1967 (see SCAQMD Rule 442, formerly Rule 66). Use of the above emission factor for other areas may result in a low estimate of emissions. For further information consult Reference 3 and 4.

Controls[2]

In order to control emissions from architectural coatings the only practical means is to change coating formulations to reduce the amount of solvent in the formulation or to use solvents including water.
In California it was estimated that if waterborne architectural coatings were to be used exclusively in place of high-solvent architectural coatings, the emissions could be reduced by up to 70% (Ref. 2).

Profile Basis[5]

The basis for the emission profile presented in Table 6-35-103 was an architectural coating study conducted by the San Diego County, California, APCD which is summarized in Reference 5. The APCD determined by questionnaire the total amount of individual solvents used in architectural coatings in San Diego County for the year 1974-75. The VOC's listed in Table 6-35-103 and their percent composition was taken directly from the results of that investigation.

Data Qualification

As discussed above this profile was based on a study of the Southern California area. Some care should be exercised in using this profile in areas of the country where solvent emission controls are not practiced.

DECEMBER 14, 1978 TABLE 6-35-103

AREA SOURCE EMISSIONS, SOLVENT USE
ARCHITECTURAL SURFACE COATINGS, COMPOSITE
DATA CONFIDENCE LEVEL: III

CONTROL DEVICE: NONE
PROCESS MODIFICATION: NONE
KVB PROFILE KEY 0196

LINE NO.	SAROAD CODE	CHEMICAL NAME	MOLECULAR WEIGHT	PERCENT WEIGHT	PERCENT VOLUME	CHEMICAL CLASSIFICATION	
1	43231	N-HEXANE	86.17	20.70	18.36	1	PARAFFIN
2	43248	CYCLOHEXANE	84.16	20.70	18.82	1	PARAFFIN
3	45102	ISOMERS OF XYLENE	106.16	2.60	1.91	3	AROMATIC
4	45202	TOLUENE	92.13	5.20	4.28	3	AROMATIC
5	45203	ETHYLBENZENE	106.16	4.30	3.14	3	AROMATIC
6	43551	ACETONE	58.08	3.20	4.21	4	CARBONYL
7	43552	METHYL ETHYL KETONE	72.10	5.60	5.97	4	CARBONYL
8	43559	METHYL N-BUTYL KETONE	100.16	.70	.54	4	CARBONYL
9	43560	METHYL ISOBUTYL KETONE	100.16	.60	.46	4	CARBONYL
10	43301	METHYL ALCOHOL	32.04	3.90	9.33	5	MISCELLANEOUS
11	43302	ETHYL ALCOHOL	46.07	.60	.99	5	MISCELLANEOUS
12	43304	ISOPROPYL ALCOHOL	60.09	16.40	20.89	5	MISCELLANEOUS
13	43305	N-BUTYL ALCOHOL	74.12	1.60	1.68	5	MISCELLANEOUS
14	43306	ISOBUTYL ALCOHOL	74.12	.60	.61	5	MISCELLANEOUS
15	43369	PROPYLENE GLYCOL	76.00	.80	.84	5	MISCELLANEOUS
16	43370	ETHYLENE GLYCOL	62.07	.60	.77	5	MISCELLANEOUS
17	43435	N-BUTYL ACETATE	116.16	2.50	1.68	5	MISCELLANEOUS
18	43446	ISOBUTYL ACETATE	116.16	1.50	.99	5	MISCELLANEOUS
19	43450	DIMETHYLFORMAMIDE	73.09	.50	.54	5	MISCELLANEOUS
20	43451	ISOBUTYL ISOBUTYRATE	144.21	6.10	3.21	5	MISCELLANEOUS
21	43452	2-ETHOXYETHYL ACETATE	132.00	1.30	.77	5	MISCELLANEOUS
		TOTAL		100.00	99.99		
	2	COMPOUNDS OF CLASSIFICATION 1	85.15	41.40	37.18		
	0	COMPOUNDS OF CLASSIFICATION 2	.00	.00	.00		
	3	COMPOUNDS OF CLASSIFICATION 3	99.72	12.10	9.33		
	4	COMPOUNDS OF CLASSIFICATION 4	69.33	10.10	11.18		
	12	COMPOUNDS OF CLASSIFICATION 5	66.08	36.40	42.30		
	0	COMPOUNDS OF CLASSIFICATION 6	.00	.00	.00		
	0	COMPOUNDS OF CLASSIFICATION 7	.00	.00	.00		
	21	COMPOUND COMPOSITE	76.68	100.00	99.99		

NOTES:
A. METHOD: CALCULATIONS FROM COMPOSITE SURVEY DATA CALCULATIONS FROM COMPOSITE SURVEY DATA
B. REFERENCES: SAN DIEGO COUNTY APCD SOURCE DATA QUESTIONNAIRES (REF. 5)
C. APPLICABLE SCC CATEGORIES: 6-35-103-00

REFERENCES

1. "Status Report on Organic Solvent Regulations," California Air Resources Board, Staff Report 76-25-4, Nov. 24, 1976.

2. "Consideration of Model Organic Solvent Rule Applicable to Architectural Coatings," California Air Resources Board, Staff Report 77-14-4, June 29, 1977.

3. Southerland, J. H., et al., "Emission inventory/Factor Workshop," Volume II, EPA Office of Air Quality Planning and Standards, September 13-15, 1977.

4. Danielson, J.A. (ed), "Air Pollution Engineering Manual," U.S. Environmental Protection Agency, Office of Air Quality Planning and Standards, Research Triangle Park, NC, AP-40, May 1973.

5. Taback, H. J., et al., "Control of Hydrocarbon Emissions from Stationary Sources in the California South Coast Air Basin," Vol. I and II, KVB, Inc., June 1978.

6-35-702 DOMESTIC, GENERAL

Process Description

Domestic solvents are here defined as any solvent found in products used around the house, garage, or yard. The following table lists many of the common domestic products currently in use, percent by weight of solvent, and the estimated national sales.

NATIONAL DOMESTIC AND COMMERCIAL SOLVENT SALES
Based on Department of Commerce Data

Product	Estimated National Sales (10^6 lbs)	Solvents (wt. %)	Total Weight of Solvents (10^6 lbs)
Furniture Polish	53	40	21
Floor Polish	87	40	35
Shoe Polish	3	40	1
Metal Polish	8	40	3
Shaving Soap	56	5	3
After Shave	49	20	10
Perfumes, Toiletries & Cosmetics	17	39	7
Shampoo	152	10	15
Hair Tonics	5	5	0
Hair Spray	210	59	124
Hair Rinses	23	5	1
Mouthwash	119	14	17
Creams	74	30	22
Suntan Oil	9	50	5
Hand Lotion	51	20	10
Cleaning Lotions	23	60	14
Rubbing Alcohol	153	100	153
Deodorant	148	14	21
Nail Polish	1	50	1
Nail Polish Remover	8	90	7
TOTAL			469

Reference 1

Emissions

The organic emissions from domestic chemical use results from the vaporization of the low boiling point solvents contained within the product. The quantity and species of these emissions depends greatly, of course, on the product used - concentration and composition of solvent in product. A recent hydrocarbon emissions study (Ref. 1) estimated the organic emissions from domestic chemical use to be 1.1 tons per 1000 people per year.

Profile 6-35-702 presents a composite estimate of the organic species eminating from common domestic solvent use.

Profile Basis[1]

The basis for the composite profile of domestic solvent use was an extensive survey and engineering evaluation of literature data obtained from major domestic product manufacturers. The population based emission factor was mainly based on sales data obtained from the Department of Commerce.

Data Qualification

The above mentioned profile and emission factor are intended to be used to characterize the organic emissions resulting from domestic solvent use. They are at best approximations and composites of many types and brands of household chemical products in current use and should be used as such. A population based emission factor was estimated to best reflect the distribution of these emissions.

DECEMBER 14, 1978 TABLE 6-35-702

AREA SOURCE EMISSIONS, SOLVENT USE
DOMESTIC SOLVENTS, GENERAL
DATA CONFIDENCE LEVEL: IV

CONTROL DEVICE: NONE
PROCESS MODIFICATION: NONE
KVB PROFILE KEY 0197

LINE NO.	SAROAD CODE	CHEMICAL NAME	MOLECULAR WEIGHT	PERCENT WEIGHT	PERCENT VOLUME	CHEMICAL CLASSIFICATION
1	43214	ISOBUTANE	58.12	5.30	5.04	1 PARAFFIN
2	45101	NAPHTHA	114.00	4.50	2.22	3 AROMATIC
3	43502	FORMALDEHYDE	30.03	.60	1.11	4 CARBONYL
4	43551	ACETONE	58.08	1.40	1.33	4 CARBONYL
5	43302	ETHYL ALCOHOL	46.07	36.90	44.40	5 MISCELLANEOUS
6	43304	ISOPROPYL ALCOHOL	60.09	38.50	35.53	5 MISCELLANEOUS
7	43367	GLYCOL ETHER	62.07	8.30	7.43	5 MISCELLANEOUS
8	43369	PROPYLENE GLYCOL	76.00	3.20	2.33	5 MISCELLANEOUS
9	43435	N-BUTYL ACETATE	116.16	1.30	.61	5 MISCELLANEOUS
		TOTAL		100.00	100.00	
	1	COMPOUNDS OF CLASSIFICATION 1	58.12	5.30	5.04	
	0	COMPOUNDS OF CLASSIFICATION 2	.00	.00	.00	
	1	COMPOUNDS OF CLASSIFICATION 3	114.00	4.50	2.22	
	2	COMPOUNDS OF CLASSIFICATION 4	45.32	2.00	2.44	
	5	COMPOUNDS OF CLASSIFICATION 5	54.15	88.20	90.30	
	0	COMPOUNDS OF CLASSIFICATION 6	00	.00	.00	
	0	COMPOUNDS OF CLASSIFICATION 7	.00	.00	.00	
	9	COMPOUND COMPOSITE	55.46	100.00	100.00	

NOTES:
A. METHOD: CALCULATIONS FROM COMPOSITE SURVEY DATA ENGINEERING EVALUATION OF LITERATURE DATA
B. REFERENCES: LITERATURE TEST DATA (REF. 1)
C. APPLICABLE SCC CATEGORIES: 6-35-702-00

Reference

1. Taback, H. J., et al., "Control of Hydrocarbon Emissions from Stationary Sources in the California South Coast Air Basin," Vol. I and II, KVB, Inc., Tustin, CA, June 1978.

6-35 AREA SOURCE EMISSIONS, SOLVENT USE

6-35-705 PESTICIDES, GENERAL

Process Description[1]

Pesticides consist of any chemical that is formulated to kill pests such as insects and rodents. The chemicals used are generally arsenic, maleic anhydride, or pyridine derivatives in suspension or solution in an organic solvent (Ref. 1).

Pesticides are commonly available in the form of liquids, aerosols or powders and are applied by spraying and/or dusting.

Emissions[2-5]

Organic air contaminants are emitted from the vaporization of the solvents used or from the vaporization of the pesticide. An emission factor of nine tons per 100,000 people per year (Ref. 2) for domestic and commercial use was developed from information obtained from State Pesticide Use Reports (Ref. 3-5).

The estimated organic specie emissions from pesticide use is presented in profile 6-35-705.

Controls

The fugitive organic emissions resulting from the use of common pesticides can possibly be reduced by:

1. use of higher boiling point solvents, and
2. dusting instead of over spraying and aerosols when possible.

These recommendations may not be feasible or even possible in many situations due to the effective chemical formulation and corresponding application methods necessary to accomplish the desired effect of killing pests.

Profile Basis[2,3]

Profile 6-35-705 is based on an engineering evaluation of the information contained within the State of California Pesticide Use Reports (Ref. 2 and 3).

Data Qualification

The above mentioned profile and emission factor are intended to be used to characterize the organic emissions resulting from the domestic and commercial use of common pesticides. They are at best approximations and composites of many types and brands of pesticides in current use and should be used with this in mind. A population based emission factor was estimated to best reflect typical domestic and commercial pesticide use.

DECEMBER 14, 1978 TABLE 6-35-705

AREA SOURCE EMISSIONS, SOLVENT USE
PESTICIDES, DOMESTIC AND COMMERCIAL, COMPOSITE FOR CALIFORNIA
DATA CONFIDENCE LEVEL: III

CONTROL DEVICE: NONE
PROCESS MODIFICATION: NONE
KVB PROFILE KEY 0076

LINE NO.	SAROAD CODE	CHEMICAL NAME	MOLECULAR WEIGHT	PERCENT WEIGHT	PERCENT VOLUME	CHEMICAL CLASSIFICATION	
1	43105	ISOMERS OF HEXANE	86.17	8.10	8.71	1	PARAFFIN
2	43115	C-7 CYCLOPARAFFINS	98.19	15.40	14.55	1	PARAFFIN
3	43116	C-8 CYCLOPARAFFINS	112.23	1.60	1.30	1	PARAFFIN
4	43118	MINERAL SPIRITS	114.00	15.00	12.23	1	PARAFFIN
5	43122	ISOMERS OF PENTANE	72.15	3.10	3.99	1	PARAFFIN
6	43204	PROPANE	44.09	1.80	3.80	1	PARAFFIN
7	43212	N-BUTANE	58.12	4.40	7.04	1	PARAFFIN
8	43214	ISOBUTANE	58.12	1.40	2.22	1	PARAFFIN
9	43220	N-PENTANE	72.15	3.20	4.08	1	PARAFFIN
10	43231	N-HEXANE	86.17	3.70	3.99	1	PARAFFIN
11	45102	ISOMERS OF XYLENE	106.16	15.00	13.07	3	AROMATIC
12	45202	TOLUENE	92.13	5.00	5.00	3	AROMATIC
13	43819	METHYLENE BROMIDE	173.85	10.00	5.38	5	MISCELLANEOUS
14	45201	BENZENE	78.11	12.30	14.64	7	NON-REACTIVE
		TOTAL		100.00	100.00		
	10	COMPOUNDS OF CLASSIFICATION 1	86.43	57.70	61.91		
	0	COMPOUNDS OF CLASSIFICATION 2	.00	.00	.00		
	2	COMPOUNDS OF CLASSIFICATION 3	102.28	20.00	18.07		
	0	COMPOUNDS OF CLASSIFICATION 4	.00	.00	.00		
	1	COMPOUNDS OF CLASSIFICATION 5	173.85	10.00	5.38		
	0	COMPOUNDS OF CLASSIFICATION 6	.00	.00	.00		
	1	COMPOUNDS OF CLASSIFICATION 7	78.11	12.30	14.64		
	14	COMPOUND COMPOSITE	92.78	100.00	100.00		

NOTES:
A. METHOD: CALCULATIONS FROM COMPOSITE SURVEY DATA ENGINEERING EVALUATION OF LITERATURE DATA
B. REFERENCES: T.W. SONNICHSEN, KVB ENGINEER (REF. 2 AND 3)
C. APPLICABLE SCC CATEGORIES: 6-35-705-98

REFERENCES

1. Considine, D. M., (ed.), "Chemical and Process Technology Encyclopedia," McGraw-Hill Book Co., 1974.

2. Taback, H. J., et al., "Control of Hydrocarbon Emissions from Stationary Sources in the California South Coast Air Basin," Vol. I and II, KVB, Inc., Tustin, CA, June 1978.

3. "Pesticide Use Report," Annual 1976, Department of Food and Agriculture, Agricultural Chemicals and Food.

4. Personal communication with Dr. Ming-yu Li, University of California Davis, Department of Food Protection and Toxicology Center.

5. Wiens, F. J., "Reactive Organic Gas Emissions from Pesticide Use in California," California Air Resources Board, December 1977.

6-47 AREA SOURCE EMISSIONS, GEOGENIC

6-47-409 FORESTS

Process Description[1]

The release of volatile organic substances through the aerial organs of plants is a well-known characteristic of the plant world. The prime source of the terpenes emitted from trees is believed to be the foliage. These emissions occur in conjunction with a plant's normal photosynthetic and respiratory exchange of atmospheric gases.

Emissions[1,2]

Plant species release appreciable amounts of volatile organic substances to the atmosphere. The major hydrocarbon terpene compounds emitted as shown in profile 6-47-409 are mono-terpenes (C_{10}) like α-pinene, β-pinene, limonenes, and the hemiterpene (C_5) isoprene (Refs. 1 & 2).

Hydrocarbon emissions rate data provided by Zimmerman (Ref. 2) is presented in the following table. Local land management agencies and/or Government Forest Services should be contacted to obtain information on the type of vegetation and leaf biomass found for the area in question. An annual HC emission rate per acre per plant species can then be calculated using the following equation (Ref. 2):

$$\frac{\text{Emission Rate}}{\mu g/g.hr} \times \frac{\text{Leaf Biomass}}{10^5 kg/km^2} \times \frac{\text{Active-Dormant Period}}{hrs/yr}$$

$$\times\ 8.91 \times 10^{-6} = lb/acre.plant\ species.yr$$

TABLE OF FOREST NATURAL EMISSION RATES BASED ON LEAF BIOMASS

Southern California Forest Type (% Composition)	Active[2] Emission Rate μg/g·hr	Dormant[2] Emission Rate μg/g·hr	Leaf[2] Biomass 10^5 kg/km^2	Annual Emission Factor lbs/acre·yr
Hardwoods	6 months	6 months	-	46
(60%) Oak	4	0	3	-
(40%) Maple	1	0	3	-
Douglas Fir	1	0	11	86
Mixed Conifer	-	-	-	150
(60%) Ponderosa Pine	3	1.5	11	-
(40%) Douglas Fir	1	0	11	-
Pines	3	1.5	11	193
Pinjon Juniper	3	3	3	70
Brush	-	-	-	173
(85%) Sagebrush[1]	12	4	3	-
(10%) Scrub Oak	4	0	3	-
(5%) Juniper	3	3	3	-

(Ref. 2

[1] Sagebrush equivalent to mesquite and chaparral in emissions.

[2] Consult local Forest Service for specific area information. Southern California, for example, was estimated to have a 6 month active and 6 month dormant period for some species. Leaf biomass for Southern California was also estimated.

Controls

Controls are not applicable to forest emissions.

Profile Basis[3]

The primary source of data on natural emission factors was P. R. Zimmerman, Washington State University (Ref. 2). Zimmerman, in support of a national emission assessment, generated emission rates and biomass data based on tests perfomed in the northwest and east coast areas of the U.S. The values presented in the above table have been adjusted with the aid of Mr. Zimmerman and the National Forest Service to take into account the conditions found within Southern California.

Data Qualification

The HC emission factors presented in the above table are representative of forest conditions located within Southern California. Application of these values to areas other than Southern California may result in significant error. References 1 and 2 and local forest services should be consulted for emission factor data for other areas.

Profile 6-47-409 may be used to characterize the volatile organic emissions from a forested area.

DECEMBER 14, 1978 TABLE 6-47-409 AREA SOURCE EMISSIONS, GEOGENIC
FORESTS
DATA CONFIDENCE LEVEL: III

CONTROL DEVICE: NONE
PROCESS MODIFICATION: NONE
KVB PROFILE KEY 0204

LINE NO.	SAROAD CODE	CHEMICAL NAME	MOLECULAR WEIGHT	PERCENT WEIGHT	PERCENT VOLUME	CHEMICAL CLASSIFICATION
1	43123	TERPENES	136.23	100.00	100.00	2 OLEFIN
		TOTAL		100.00	100.00	
	0	COMPOUNDS OF CLASSIFICATION 1	.00	.00	.00	
	1	COMPOUNDS OF CLASSIFICATION 2	136.23	100.00	100.00	
	0	COMPOUNDS OF CLASSIFICATION 3	.00	.00	.00	
	0	COMPOUNDS OF CLASSIFICATION 4	.00	.00	.00	
	0	COMPOUNDS OF CLASSIFICATION 5	.00	.00	.00	
	0	COMPOUNDS OF CLASSIFICATION 6	.00	.00	.00	
	0	COMPOUNDS OF CLASSIFICATION 7	.00	.00	.00	
	1	COMPOUND COMPOSITE	136.23	100.00	100.00	

NOTES: A. METHOD: CALCULATIONS FROM COMPOSITE SURVEY DATA ENGINEERING EVALUATION OF LITERATURE DATA
B. REFERENCES: LITERATURE TEST DATA (REF. 2)
C. APPLICABLE SCC CATEGORIES: 6-47-409-99

REFERENCES

1. Rasmussen, R. A., "What do the Hydrocarbons from Trees Contribute to Air Pollution," Journal of APCA, Vol. 22, No. 7, July 1972.

2. Zimmerman, P. R., "Determination of the Emission Rates of Hydrocarbon from Indigenous Species of Vegetation in the Tampa/St. Petersburgh Area," Interim Report for EPA Contract 68-01-4432.

3. Taback, H. J. et al., "Control of Hydrocarbon Emissions from Stationary Sources in the California South Coast Air Basin," Vol. I & II, KVB, Inc., Tustin, CA, June 1978.

6-47 AREA SOURCE EMISSION, GEOCENIC

6-47-411 NATURAL SEEPS

Process Description[1]

Natural seeps mainly consist of gaseous hydrocarbons and evolution of heavy oil and tar. Diffusion appears to account for the evolution of these gases and heavy oils.

A crude oil reservoir contains a mixture of water, oil and gas in the small pore spaces (holes) in the reservoir rock. Initially, the reservoir holds these fluids under considerable pressure, caused by the hydrostatic pressure of the ground water. At this pressure a large part of the gas is dissolved in the oil. These two fluids, the initial (connate) water and the gas in solution, combine to provide the driving force for moving the oil on a path of lease resistance through the ground.

Emissions[1,2]

Studies (Ref. 2) conducted to quantify the emissions from two offshore seeps in Santa Barbara County rated the largest seep to have an organic compound emissions of ∿6 tons per day. An emission factor per se is not feasible due to the very nature of such a process. The help of local petroleum agencies should be solicited if possible in an attempt to locate and quantify natural seeps.

In an attempt to speciate these natural seepage emissions, a nearby oil production field's raw petroleum gas was sampled and analyzed (Ref. 1). Profile 6-47-411 presents the results of this effort.

Controls

The presence of these seeps generally creates a local pollution problem due to "petroleum odors" and evolution of heavy oil and tar. A practical form of control is not available.

Profile Basis

Samples of raw petroleum gas believed to be representative were obtained from an oil field near Santa Barbara.

Samples were collected using glass gas collecting bottles and NIOSH type charcoal tubes.

Data Qualification

Profile 6-47-411 should be used with discretion to represent the gaseous hydrocarbon emissions from natural seeps until more applicable or updated information is made available.

DECEMBER 14, 1978 TABLE 6-47-411 AREA SOURCE EMISSIONS, GEOGENIC
PETROLEUM SEEPS
DATA CONFIDENCE LEVEL: III

CONTROL DEVICE: NONE
PROCESS MODIFICATION: NONE
KVB PROFILE KEY 0205

LINE NO.	SAROAD CODE	CHEMICAL NAME	MOLECULAR WEIGHT	PERCENT WEIGHT	PERCENT VOLUME	CHEMICAL CLASSIFICATION	
1	43122	ISOMERS OF PENTANE	72.15	1.60	.69	1	PARAFFIN
2	43204	PROPANE	44.09	29.10	20.70	1	PARAFFIN
3	43212	N-BUTANE	58.12	14.00	7.56	1	PARAFFIN
4	43214	ISOBUTANE	58.12	6.40	3.45	1	PARAFFIN
5	43220	N-PENTANE	72.15	1.20	.53	1	PARAFFIN
6	43201	METHANE	16.04	19.00	37.16	6	METHANE
7	43202	ETHANE	30.07	28.70	29.92	7	NON-REACTIVE
		TOTAL		100.00	100.01		
	5	COMPOUNDS OF CLASSIFICATION 1	49.82	52.30	32.93		
	0	COMPOUNDS OF CLASSIFICATION 2	.00	.00	.00		
	0	COMPOUNDS OF CLASSIFICATION 3	.00	00	.00		
	0	COMPOUNDS OF CLASSIFICATION 4	00	00	.00		
	0	COMPOUNDS OF CLASSIFICATION 5	.00	.00	.00		
	1	COMPOUNDS OF CLASSIFICATION 6	16.04	19.00	37.16		
	1	COMPOUNDS OF CLASSIFICATION 7	30.07	28.70	29.92		
	7	COMPOUND COMPOSITE	31.36	100.00	100.01		

NOTES: A. METHOD: CALCULATIONS FROM COMPOSITE SURVEY DATA GC-MS ANALYSIS OF GRAB SAMPLE
B. REFERENCES: KVB TEST DATA (REF. 1)
C. APPLICABLE SCC CATEGORIES: 6-47-411-01

REFERENCES

1. Taback, H. J., et al., "Control of Hydrocarbon Emissions from Stationary Sources in the California South Coast Air Basin," Vol. I and II, KVB, Inc., Tustin, CA, June 1978.

2. Harrison, P. R. and Maas, S. J., "Monitoring of Natural Seeps in the Santa Barbara Channel Off Coal Oil Point," Meteorology Research, Inc., Report 76-R-1408, March 1976.

6-47 AREA SOURCE EMISSIONS, GEOGENIC

6-47-429 CITRUS GROVES

Process Description[1,2]

Studies have shown that significant quanitites of terpenes are emitted as part of the natural biological cycle of citrus trees (Ref. 1). The release of volatile substances through the aerial organs of plants is a well-known characteristic of the plant world (Ref. 2).

Emissions[2,3]

Emissions occur in conjunction with a plant's normal photosynthetic and respiratory exchange of atmospheric gases. Freshly exuded bud resins and oleoresin blisters contribute significant quantities of monoterpenes to the surrounding air as to leaf, bark and wood tissues undergoing cellularlysis and decay. The major HC terpene compounds emitted as shown in profile 6-47-429 are monoterpenes (C_{10}) like α-pinene, β-pinene, limonenes, and the hemiterpene (c_5) isoprene (Ref. 2,3).

An emission factor of 0.06 tons per year per acre of citrus trees was proposed by Zimmerman (Ref. 3). An annual emission rate can be calculated by multiplying the HC emission factor by the acreage of citrus trees contained within the study area.

Controls

VOC control equipment is not applicable to a citrus grove.

Profile Basis[3]

The primary source of data on citrus grove emissions was Mr. Zimmerman, Washington State University. Zimmerman, in support of a national emission assessment, generated emission rates based on tests conducted in the Tampa/ St. Petersburg Area (Ref. 3).

Data Qualifications

The 0.06 tons per year per acre of citrus trees and the corresponding organic emissions profile may be used in estimating emissions from citrus crops in general. The EPA should be contacted for any new information generated since the date of this publication.

DECEMBER 14, 1978 TABLE 6-47-429

AREA SOURCE EMISSIONS, GEOGENIC
CITRUS GROVES
DATA CONFIDENCE LEVEL: III

CONTROL DEVICE: NONE
PROCESS MODIFICATION: NONE
KVB PROFILE KEY 0199

LINE NO.	SAROAD CODE	CHEMICAL NAME	MOLECULAR WEIGHT	PERCENT WEIGHT	PERCENT VOLUME	CHEMICAL CLASSIFICATION
1	43123	TERPENES	136.23	100.00	100.00	2 OLEFIN
		TOTAL		100.00	100.00	
	0	COMPOUNDS OF CLASSIFICATION 1	00	.00	.00	
	1	COMPOUNDS OF CLASSIFICATION 2	136.23	100.00	100.00	
	0	COMPOUNDS OF CLASSIFICATION 3	.00	.00	.00	
	0	COMPOUNDS OF CLASSIFICATION 4	.00	.00	.00	
	0	COMPOUNDS OF CLASSIFICATION 5	.00	.00	.00	
	0	COMPOUNDS OF CLASSIFICATION 6	.00	.00	.00	
	0	COMPOUNDS OF CLASSIFICATION 7	.00	.00	.00	
	1	COMPOUND COMPOSITE	136.23	100.00	100.00	

NOTES: A. METHOD: CALCULATIONS FROM COMPOSITE SURVEY DATA ENGINEERING EVALUATION OF LITERATURE DATA
B. REFERENCES: LITERATURE TEST DATA (REF. 3)
C. APPLICABLE SCC CATEGORIES: 6-47-429-99

REFERENCES

1. Taback, H. J., et al., "Control of Hydrocarbon Emissions from Stationary Sources in the California South Coast Air Basin," Vol. I and II, KVB, Inc., Tustin, CA, June 1978.

2. Rasmussen, R. A., "What do the Hydrocarbons from Trees Contribute to Air Pollution, " Journal of APCA, Vol. 22, No. 7, July 1972.

3. Zimmerman, P. R., "Determination of the emission Rates of Hydrocarbons from Indigeneous Species of Vegetation in the Tampa/St. Petersburg Area," Interim Report for EPA Contract 68-01-4432.

6-49-999 SANITARY LANDFILLS

Process Description[1,2]

One long-accepted method for residential and industrial waste disposal has been the use of sanitary landfills. The waste disposed of at these sites is comprised basically of refuse, domestic garbage, and inert construction material. Waste is generally laid in layers, compacted and covered by a thin layer of silt. Several studies (Refs. 1, 2) have shown that as a result of this procedure, appreciable amounts of methane-rich gas are generated due to the biological anaerobic decomposition of these wastes.

Emissions[3-5]

The production rate of landfill gas appears to be highly dependent on the type of refuse (organic content), moisture content, soil composition and permeability, and age of the landfill site. Gas production within a sanitary landfill is caused by the aerobic and anaerobic decomposition of organic material in the presence of moisture. The aerobic state predominates in new landfills until the consumption of oxygen exceeds the supply, at which time a transition to an anaerobic state takes place.

Methane gas (CH_4) generally first appears after the transition from an aerobic to anaerobic state has begun. An increase in CH_4 production with time can therefore be expected. Methane and carbon dioxide constitute approximately 99% of the gas emanating from a landfill. Reports on the quantitative nature of these gases vary widely due to the inherent differences existing at each site.

An empirical approach for estimating the rate of carbon escape is presented in a study by the California State Water Quality Control Board (Ref. 4). Data from this study shows that

$$r = \frac{177}{3.75 + 1.95t}$$

where:

r = rate of carbon escape, lb/ton refuse·year

t = age of refuse, years

26200-795

Note that the carbon is released as both methane (CH_4) and carbon dioxide (CO_2) gas. To use this relationship, a gross estimate of the total quantity and age of wastes presently "alive" in an area is needed.

For this example, data obtained by KVB (Ref. 5) on Sanitary Landfill Sites in the California South Coast Air Basin will be used. Over 15 million tons of liquid and solid wastes are disposed of annually in the 45 major landfill sites distributed within the Basin. A summary of the resulting computation using the above formula and the assumed age and quantity of refuse "alive" in the Basin is given in Table 6-49. It was also assumed, for the purpose of this example, that the quantity of materials disposed of in landfills was constant over the last 75 years and was therefore proportional to the total population within the Basin. As shown in Table 6-49, 90% of the carbon emissions result from deposits made in the last 25 years. Assuming a 15% conversion by weight of the total carbon emitted is transformed to methane (Ref. 4), this would represent approximately 340,000 tons per year or about 930 tons per day of methane as shown in the following calculations.

The calculations performed to obtain the total tons per year of carbon released available as methane (CH_4) are as follows

$$(3401.23 \times 10^6 \frac{\text{lb of carbon}}{\text{one year}}) \left(\frac{1 \text{ ton}}{2000 \text{ lb}}\right) (15\%) = 255{,}092 \text{ tons/yr}$$

To obtain the actual weight of methane from carbon

$$255{,}092 \text{ tons/yr} \left(\frac{16 \text{ ton moles methane}}{12 \text{ ton moles carbon}}\right) = 340{,}123 \text{ tons/yr } CH_4$$

then, dividing by 365 = 932 tons/day CH_4.

A more detailed approach utilizing actual field measurements of landfill gas can be found in Reference 4.

Controls[5]

As can be seen from the previous discussion, sanitary landfills are a significant source of organic compound emissions. Table 6-49-999 presents the results of samples of landfill gases collected by KVB during its study for the California Air Resources Board (Ref. 5). As expected, the

TABLE 6-49. SUMMARY OF COMPUTATION OF TOTAL CARBON RELEASE FROM ACTIVE LANDFILL SITES DURING 1975*

Period	t/yr	r (lb c/ ton refuse)	% of 1975 Refuse (based on population)	Refuse Quantity for Period (10^6 tons)	Total Carbon Emissions in 1975 (10^6tons)
1970-75	2.5	20.52	98	76.3	1566.49
1965-70	7.5	9.63	92	71.7	690.14
1960-65	12.5	6.29	83	64.7	406.68
1955-50	17.5	4.67	70	54.5	254.65
1950-55	22.5	3.72	55	42.8	159.38
1945-50	27.5	3.08	44	34.3	105.57
1940-45	32.5	2.64	35	27.3	71.98
1935-40	37.5	2.30	28	21.8	50.17
1930-35	42.5	2.04	23	17.9	36.55
1925-30	47.5	1.84	18	14.0	25.80
1920-25	52.5	1.67	13	10.1	16.91
1915-20	57.5	1.53	8	6.2	9.53
1910-15	62.5	1.41	4	3.1	4.39
1905-10	67.5	1.31	2	1.6	2.04
1900-05	72.5	1.22	1	0.8	0.95
Total				447.1	3401.23

*Reference 5

hydrocarbon portion of the CO_2/CH_4 landfill generated gases that were primarily methane with trace quantities of various other materials. Considering the appreciable amounts of methane emissions, these trace quantities represent significant sources of organic compounds vented to the atmosphere in excess of one ton per day.

The control of hydrocarbons emanating from landfills consists of basically two methods:

1. Extraction plus combustion
2. Extraction, refining, and commercial sale

Both forms initially require the extraction of the landfill gas prior to its entering the atmosphere. A network of underground piping under a slight vacuum extracts the gas and transfers it to the prescribed control device. The rate of extraction is dependent on the site's ability to generate CH_4 gas.

Profile Basis

Duplicate grab samples by gas collection bottles plus charcoal tubes were made at a Class II sanitary landfill site. This landfill was carefully selected to be representative of a typical Class II sanitary landfill site. Age of the site where the samples were taken was estimated at five to seven years.

Data Qualification

Profile 6-49-999A applies to Class II sanitary landfill sites located in semi-arid regions. A Class II sanitary landfill prohibits the dumping of liquid sewage and hazardous waste material.

DECEMBER 14, 1978 TABLE 6-49-999A AREA SOURCE EMISSIONS, SOLID WASTE
LANDFILL SITE, CLASS II
DATA CONFIDENCE LEVEL: III

CONTROL DEVICE: NONE
PROCESS MODIFICATION: NONE
KVB PROFILE KEY 0202

LINE NO.	SAROAD CODE	CHEMICAL NAME	MOLECULAR WEIGHT	PERCENT WEIGHT	PERCENT VOLUME	CHEMICAL CLASSIFICATION	
1	43204	PROPANE	44.09	10	.03	1	PARAFFIN
2	43212	N-BUTANE	58.12	.20	.05	1	PARAFFIN
3	43214	ISOBUTANE	58.12	.10	.03	1	PARAFFIN
4	43220	N-PENTANE	72.15	.10	.02	1	PARAFFIN
5	43242	CYCLOPENTANE	70.14	.20	.05	1	PARAFFIN
6	43123	TERPENES	136.23	.10	.02	2	OLEFIN
7	45102	ISOMERS OF XYLENE	106.16	.10	.02	3	AROMATIC
8	45202	TOLUENE	92.13	.10	.02	3	AROMATIC
9	43817	PERCHLOROETHYLENE	165.83	.30	.03	5	MISCELLANEOUS
10	43201	METHANE	16.04	98.60	99.69	6	METHANE
11	43202	ETHANE	30.07	.10	.05	7	NON-REACTIVE
		TOTAL		100.00	100.01		
	5	COMPOUNDS OF CLASSIFICATION 1	60.68	.70	.18		
	1	COMPOUNDS OF CLASSIFICATION 2	136.23	.10	.02		
	2	COMPOUNDS OF CLASSIFICATION 3	99.15	.20	.04		
	0	COMPOUNDS OF CLASSIFICATION 4	.00	.00	.00		
	1	COMPOUNDS OF CLASSIFICATION 5	165.83	.30	.03		
	1	COMPOUNDS OF CLASSIFICATION 6	16.04	98.60	99.69		
	1	COMPOUNDS OF CLASSIFICATION 7	30.07	.10	.05		
	11	COMPOUND COMPOSITE	16.23	100.00	100.01		

NOTES: A. METHOD: CALCULATIONS FROM COMPOSITE SURVEY DATA GC-MS ANALYSIS OF GRAB SAMPLES
B. REFERENCES: KVB TEST DATA (REF. 5)
C. APPLICABLE SCC CATEGORIES: 6-49-999-99

REFERENCES

1. Mery, R. C. and Stone, R., "Sanitary Landfill Behavior in an Aerobic Environment," Public Works, January 1966.

2. McFarlane, I.C., "Gas Explosion Hazards in Sanitary Landfills," Public Works, May 1970.

3. Dair, F. R. and Schwegler, R. E., "Energy Recovery from Landfills," Waste Age, March/April 1974.

4. "In-Situ Investigation of Movements of Gases Produced from Decomposing Refuse," Engineering-Sciences, Inc., California State Water Qualify Control Board Publication No. 31, 1965.

5. Taback, H. J., et al., "Control of Hydrocarbon Emissions from Stationary Sources in the California South Coast Air Basin," KVB, Inc., California Air Resources Board, Final Report, June 1978.

6-49-999 ANIMAL WASTE

Process Description[1]

The decay of animal wastes consists of aerobic and anaerobic phases. The former occurs throughout excreta decomposition and in the surface drying of fecal matter. The odoriferous compounds released do not generally contain mercaptans or sulfides. The latter occurs after a crust has formed over the manure pile. The bacteria involved in this anaerobic digestion produce the more foul-smelling components which include sulfurous compounds.

Emissions[2-5]

In any animal production system, volatile compounds from decomposing manure are released into the atmosphere. In some cases these gases have an adverse effect on the animals themselves or possess such odors as to be judged a public nuisance.

Results from recent studies (Refs. 2-4) estimated animal wastes TOC emission factors to be:

. Cattle	440	lbs TOC/10^3 head/day*
. Chickens	7	"
. Pigs	160	"
. Horses	229	"
. Sheep	33	"

Profile 6-49-999-B presents the organic species (>1%wt) estimated to be emanating from livestock waste in general (Ref. 5).

Local county or state agricultural reports are useful in obtaining information on livestock populations.

Controls[1-3]

The control of organic gases generated from the decomposition of animal waste in confined areas generally take the form of:

. Maintenance of an aerobic environment in the waste-handling system (Ref. 3)

---

* TOC--Total Organic Carbon

- Recovery as a possible energy source (Ref. 2)
- Wastelage--process of mixing fresh manure with hay (Ref. 1)
- Combustion--catalytic oxidation
  --thermal incinerator
  --combustion air supply
- Alkaline Scrubbing--odor control (Ref. 1)

Profile Basis[5]

The emission factors and profile presented are based on a survey and engineering evaluation of the literature cited (Refs. 1-5).

Data Qualification

The reported emission factors and corresponding profile may be used in estimating the total organic emissions from livestock waste in general. The effects of environmental factors such as rain, heat, and cold, however, were not considered. Their influence is estimated to be significant in estimating annual emission rates.

DECEMBER 14, 1978 TABLE 6-49-999B AREA SOURCE EMISSIONS, SOLID WASTE
ANIMAL WASTE DECOMPOSITION
DATA CONFIDENCE LEVEL: III

CONTROL DEVICE: NONE
PROCESS MODIFICATION: NONE
KVB PROFILE KEY 0203

LINE NO.	SARDAD CODE	CHEMICAL NAME	MOLECULAR WEIGHT	PERCENT WEIGHT	PERCENT VOLUME	CHEMICAL CLASSIFICATION	
1	43551	ACETONE	58.08	2.00	.65	4	CARBONYL
2	43302	ETHYL ALCOHOL	46.07	2.00	.83	5	MISCELLANEOUS
3	43304	ISOPROPYL ALCOHOL	60.09	2.00	.63	5	MISCELLANEOUS
4	43434	PROPYL ACETATE	102.13	2.00	.38	5	MISCELLANEOUS
5	43721	ETHYLAMINE	45.09	1.00	.42	5	MISCELLANEOUS
6	43740	TRIMETHYL AMINE	59.11	1.00	.33	5	MISCELLANEOUS
7	43201	METHANE	16.04	70.00	83.96	6	METHANE
8	43202	ETHANE	30.07	20.00	12.79	7	NON-REACTIVE
		TOTAL		100.00	99.99		
	0	COMPOUNDS OF CLASSIFICATION 1	.00	.00	.00		
	0	COMPOUNDS OF CLASSIFICATION 2	.00	.00	.00		
	0	COMPOUNDS OF CLASSIFICATION 3	.00	.00	.00		
	1	COMPOUNDS OF CLASSIFICATION 4	58.08	2.00	.65		
	5	COMPOUNDS OF CLASSIFICATION 5	59.21	8.00	2.59		
	1	COMPOUNDS OF CLASSIFICATION 6	16.04	70.00	83.96		
	1	COMPOUNDS OF CLASSIFICATION 7	30.07	20.00	12.79		
	8	COMPOUND COMPOSITE	19.23	100.00	99.99		

NOTES: A. METHOD: CALCULATIONS FROM COMPOSITE SURVEY DATA ENGINEERING EVALUATION OF LITERATURE DATA
B. REFERENCES: LITERATURE TEST DATA (REF. 1-5)
C. APPLICABLE SCC CATEGORIES: 6-49-999-98

REFERENCES

1. Bethea, Robert N., "Solution for Feedlot Odor Control Problems," Journal of ARCA, Vol. 22, No. 10, October 1972.

2. Horton, R. and Hawkes, D., "The Energy and Fertilizer Potential of Natural Organic Wastes," June 1976.

3. Aschbacher, P. W., "Air Pollution Research Needs Livestock Production Systems," Journal of APCA, Vol. 23, No. 4, April 1973.

4. Keller, R. M. and Cowherd, C., "Identification and Measurement of Atmospheric Organic Emissions from Natural and Quasi-Natural Sources," interim report for EPA Contract 68-02-2524, July 1977.

5. Taback, H. J., et al., "Control of Hydrocarbon Emissions from Stationary Sources in the California South Coast Air Basin," Vol. I and II, KVB, Inc., Tustin, CA, June 1978.

APPENDIX I

I-A CHEMICAL FILE BY SAROAD CODE

I-B CHEMICAL FILE BY CHEMICAL CLASSIFICATION

I-C ORGANIC SPECIES BY SOURCES

I-D NEDS SOURCE CLASSIFICATION CODES

I-E AREA SOURCE CATEGORIES

I-F BOILING POINT RANGE COMPOUNDS

APPENDIX I-A

CHEMICAL FILE BY SAROAD CODE

C H E M I C A L F I L E
SORTED BY THE CHEMICAL CLASSIFICATION

NO.	SAROAD CODE	CHEMICAL NAME	MOLECULAR WEIGHT	CHEMICAL CLASSIFICATION
1	43000	UNIDENTIFIED HYDROCARBONS	86.00	5 MISCELLANEOUS
2	43105	ISOMERS OF HEXANE	86.17	1 PARAFFIN
3	43106	ISOMERS OF HEPTANE	100.20	1 PARAFFIN
4	43107	ISOMERS OF OCTANE	114.23	1 PARAFFIN
5	43108	ISOMERS OF NONANE	128.25	1 PARAFFIN
6	43109	ISOMERS OF DECANE	142.28	1 PARAFFIN
7	43110	ISOMERS OF UNDECANE	156.30	1 PARAFFIN
8	43111	ISOMERS OF TRIDECANE	184.36	1 PARAFFIN
9	43112	ISOMERS OF DODECANE	170.33	1 PARAFFIN
10	43113	ISOMERS OF TETRADECANE	198.38	1 PARAFFIN
11	43114	ISOMERS OF PENTADECANE	212.41	1 PARAFFIN
12	43115	C-7 CYCLOPARAFFINS	98.19	1 PARAFFIN
13	43116	C-8 CYCLOPARAFFINS	112.23	1 PARAFFIN
14	43117	C-9 CYCLOPARAFFINS	126.26	1 PARAFFIN
15	43118	MINERAL SPIRITS	114.00	1 PARAFFIN
16	43119	LACTOL SPIRITS	114.00	5 MISCELLANEOUS
17	43120	ISOMERS OF BUTENE	56.10	2 OLEFIN
18	43121	ISOMERS OF PENTENE	70.13	2 OLEFIN

19	43122	ISOMERS OF PENTANE	72.15	1 PARAFFIN
20	43123	TERPENES	136.23	2 OLEFIN
21	43201	METHANE	16.04	6 METHANE
22	43202	ETHANE	30.07	7 NON-REACTIVE
23	43203	ETHYLENE	28.05	2 OLEFIN
24	43204	PROPANE	44.09	1 PARAFFIN
25	43205	PROPYLENE	42.08	2 OLEFIN
26	43206	ACETYLENE	26.04	5 MISCELLANEOUS
27	43207	CYCLOPROPANE	42.08	1 PARAFFIN
28	43208	PROPADIENE	40.06	2 OLEFIN
29	43209	METHYLACETYLENE	40.06	5 MISCELLANEOUS
30	43212	N-BUTANE	58.12	1 PARAFFIN
31	43213	BUTENE	56.10	2 OLEFIN
32	43214	ISOBUTANE	58.12	1 PARAFFIN
33	43218	1,3-BUTADIENE	54.09	2 OLEFIN
34	43219	ETHYLACETYLENE	54.09	5 MISCELLANEOUS
35	43220	N-PENTANE	72.15	1 PARAFFIN
36	43223	3-METHYL-1-BUTENE	70.14	2 OLEFIN
37	43224	1-PENTENE	70.13	2 OLEFIN
38	43228	2-METHYL-2-BUTENE	70.13	2 OLEFIN
39	43231	N-HEXANE	86.17	1 PARAFFIN
40	43232	N-HEPTANE	100.20	1 PARAFFIN

41	43233	N-OCTANE	114.23	1	PARAFFIN
42	43235	N-NONANE	128.25	1	PARAFFIN
43	43238	N-DECANE	142.28	1	PARAFFIN
44	43241	N-UNDECANE	156.30	1	PARAFFIN
45	43242	CYCLOPENTANE	70.14	1	PARAFFIN
46	43245	1-HEXENE	84.16	2	OLEFIN
47	43248	CYCLOHEXANE	84.16	1	PARAFFIN
48	43255	N-DODECANE	170.33	1	PARAFFIN
49	43258	N-TRIDECANE	184.36	1	PARAFFIN
50	43259	N-TETRADECANE	198.38	1	PARAFFIN
51	43260	N-PENTADECANE	212.41	1	PARAFFIN
52	43261	METHYLCYCLOHEXANE	98.18	1	PARAFFIN
53	43262	METHYLCYCLOPENTANE	84.16	1	PARAFFIN
54	43264	CYCLOHEXANONE	98.15	4	CARBONYL
55	43301	METHYL ALCOHOL	32.04	5	MISCELLANEOUS
56	43302	ETHYL ALCOHOL	46.07	5	MISCELLANEOUS
57	43303	N-PROPYL ALCOHOL	60.09	5	MISCELLANEOUS
58	43304	ISOPROPYL ALCOHOL	60.09	5	MISCELLANEOUS
59	43305	N-BUTYL ALCOHOL	74.12	5	MISCELLANEOUS
60	43306	ISOBUTYL ALCOHOL	74.12	5	MISCELLANEOUS
61	43308	BUTYL CELLOSOLVE	102.00	5	MISCELLANEOUS
62	43309	TERT-BUTYL ALCOHOL	74.12	5	MISCELLANEOUS

63	43310	METHYL CELLOSOLVE	76.11	5 MISCELLANEOUS
64	43311	CELLOSOLVE	90.12	5 MISCELLANEOUS
65	43320	DIACETONE ALCOHOL	116.16	4 CARBONYL
66	43351	ETHYL ETHER	74.12	5 MISCELLANEOUS
67	43367	GLYCOL ETHER	62.07	5 MISCELLANEOUS
68	43368	GLYCOL	62.07	5 MISCELLANEOUS
69	43369	PROPYLENE GLYCOL	76.00	5 MISCELLANEOUS
70	43370	ETHYLENE GLYCOL	62.07	5 MISCELLANEOUS
71	43390	TETRAHYDROFURAN	72.10	5 MISCELLANEOUS
72	43404	ACETIC ACID	60.05	5 MISCELLANEOUS
73	43432	METHYL ACETATE	74.08	5 MISCELLANEOUS
74	43433	ETHYL ACETATE	88.10	5 MISCELLANEOUS
75	43434	PROPYL ACETATE	102.13	5 MISCELLANEOUS
76	43435	N-BUTYL ACETATE	116.16	5 MISCELLANEOUS
77	43438	ETHYL ACRYLATE	100.11	5 MISCELLANEOUS
78	43443	CELLOSOLVE ACETATE	132.00	5 MISCELLANEOUS
79	43444	ISOPROPYL ACETATE	104.00	5 MISCELLANEOUS
80	43445	METHYL AMYL ACETATE	140.00	5 MISCELLANEOUS
81	43446	ISOBUTYL ACETATE	116.16	5 MISCELLANEOUS
82	43450	DIMETHYLFORMAMIDE	73.09	5 MISCELLANEOUS
83	43451	ISOBUTYL ISOBUTYRATE	144.21	5 MISCELLANEOUS
84	43452	2-ETHOXYETHYL ACETATE	132.00	5 MISCELLANEOUS

85	43502	FORMALDEHYDE	30.03	4 CARBONYL
86	43503	ACETALDEHYDE	44.05	4 CARBONYL
87	43510	BUTYRALDEHYDE	72.12	4 CARBONYL
88	43551	ACETONE	58.08	4 CARBONYL
89	43552	METHYL ETHYL KETONE	72.10	4 CARBONYL
90	43559	METHYL N-BUTYL KETONE	100.16	4 CARBONYL
91	43560	METHYL ISOBUTYL KETONE	100.16	4 CARBONYL
92	43601	ETHYLENE OXIDE	44.05	5 MISCELLANEOUS
93	43602	PROPYLENE OXIDE	58.08	5 MISCELLANEOUS
94	43702	ACETRONITRILE	41.05	7 NON-REACTIVE
95	43704	ACRYLONITRILE	55.00	5 MISCELLANEOUS
96	43721	ETHYLAMINE	45.09	5 MISCELLANEOUS
97	43740	TRIMETHYL AMINE	59.11	5 MISCELLANEOUS
98	43801	METHYL CHLORIDE	50.49	7 NON-REACTIVE
99	43802	DICHLOROMETHANE	84.94	5 MISCELLANEOUS
100	43803	CHLOROFORM	119.39	7 NON-REACTIVE
101	43804	CARBON TETRACHLORIDE	153.84	5 MISCELLANEOUS
102	43807	CARBON TETRABROMIDE	331.67	5 MISCELLANEOUS
103	43811	TRICHLOROFLUOROMETHANE	137.37	5 MISCELLANEOUS
104	43812	ETHYL CHLORIDE	64.52	5 MISCELLANEOUS
105	43813	1,1-DICHLOROETHANE	98.97	5 MISCELLANEOUS
106	43814	1,1,1-TRICHLOROETHANE	133.42	7 NON-REACTIVE

107	43815	ETHYLENE DICHLORIDE	99.00	7 NON-REACTIVE
108	43817	PERCHLOROETHYLENE	165.83	5 MISCELLANEOUS
109	43819	METHYLENE BROMIDE	173.85	5 MISCELLANEOUS
110	43820	1,1,2-TRICHLOROETHANE	131.66	7 NON-REACTIVE
111	43821	TRICHLOROTRIFLUOROETHANE	187.38	7 NON-REACTIVE
112	43822	TRIMETHYLFLUOROSILANE	92.00	5 MISCELLANEOUS
113	43823	DICHLORODIFLUOROMETHANE	120.91	5 MISCELLANEOUS
114	43824	TRICHLOROETHYLENE	131.40	5 MISCELLANEOUS
115	43860	VINYL CHLORIDE	62.50	5 MISCELLANEOUS
116	45101	NAPHTHA	114.00	3 AROMATIC
117	45102	ISOMERS OF XYLENE	106.16	3 AROMATIC
118	45103	DIMETHYLETHYLBENZENE	134.00	3 AROMATIC
119	45104	ISOMERS OF ETHYLTOLUENE	120.19	3 AROMATIC
120	45105	ISOMERS OF BUTYLBENZENE	134.21	3 AROMATIC
121	45106	ISOMERS OF DIETHYLBENZENE	134.21	3 AROMATIC
122	45107	ISOMERS OF TRIMETHYLBENZENE	120.19	3 AROMATIC
123	45108	ISOMERS OF PROPYLBENZENE	120.19	3 AROMATIC
124	45201	BENZENE	78.11	7 NON-REACTIVE
125	45202	TOLUENE	92.13	3 AROMATIC
126	45203	ETHYLBENZENE	106.16	3 AROMATIC
127	45207	1,3,5-TRIMETHYLBENZENE	120.19	3 AROMATIC
128	45220	STYRENE	104.14	3 AROMATIC

129	45221	A-METHYLSTYRENE	118.15	3 AROMATIC
130	45225	1,2,3-TRIMETHYLBENZENE	111.00	3 AROMATIC
131	45300	PHENOLS	94.11	5 MISCELLANEOUS
132	45401	XYLENE BASE ACIDS	230.00	5 MISCELLANEOUS
133	45801	CHLOROBENZENE	112.56	3 AROMATIC
134	46201	1,4-DIOXANE	88.12	5 MISCELLANEOUS

APPENDIX I-B

CHEMICAL FILE BY CHEMICAL CLASSIFICATION

C H E M I C A L F I L E
SORTED BY THE CHEMICAL CLASSIFICATION

NO.	SAROAD CODE	CHEMICAL NAME	MOLECULAR WEIGHT	CHEMICAL CLASSIFICATION
1	43105	ISOMERS OF HEXANE	86.17	1 PARAFFIN
2	43106	ISOMERS OF HEPTANE	100.20	1 PARAFFIN
3	43107	ISOMERS OF OCTANE	114.23	1 PARAFFIN
4	43108	ISOMERS OF NONANE	128.25	1 PARAFFIN
5	43109	ISOMERS OF DECANE	142.28	1 PARAFFIN
6	43110	ISOMERS OF UNDECANE	156.30	1 PARAFFIN
7	43111	ISOMERS OF TRIDECANE	184.36	1 PARAFFIN
8	43112	ISOMERS OF DODECANE	170.33	1 PARAFFIN
9	43113	ISOMERS OF TETRADECANE	198.38	1 PARAFFIN
10	43114	ISOMERS OF PENTADECANE	212.41	1 PARAFFIN
11	43115	C-7 CYCLOPARAFFINS	98.19	1 PARAFFIN
12	43116	C-8 CYCLOPARAFFINS	112.23	1 PARAFFIN
13	43117	C-9 CYCLOPARAFFINS	126.26	1 PARAFFIN
14	43118	MINERAL SPIRITS	114.00	1 PARAFFIN
15	43204	PROPANE	44.09	1 PARAFFIN
16	43207	CYCLOPROPANE	42.08	1 PARAFFIN
17	43212	N-BUTANE	58.12	1 PARAFFIN
18	43214	ISO-BUTANE	58.12	1 PARAFFIN

19	43220	N-PENTANE	72.15	1 PARAFFIN
20	43231	HEXANE	86.17	1 PARAFFIN
21	43232	HEPTANE	100.20	1 PARAFFIN
22	43233	OCTANE	114.23	1 PARAFFIN
23	43235	NONANE	128.25	1 PARAFFIN
24	43238	N-DECANE	142.28	1 PARAFFIN
25	43241	UNDECANE	156.30	1 PARAFFIN
26	43242	CYCLOPENTANE	70.14	1 PARAFFIN
27	43248	CYCLOHEXANE	84.16	1 PARAFFIN
28	43255	N-DODECANE	170.33	1 PARAFFIN
29	43258	N-TRIDECANE	184.36	1 PARAFFIN
30	43259	N-TETRADECANE	198.38	1 PARAFFIN
31	43260	N-PENTADECANE	212.41	1 PARAFFIN
32	43261	METHYLCYCLOHEXANE	85.00	1 PARAFFIN
33	43262	METHYLCYCLOPENTANE	84.16	1 PARAFFIN
34	43120	ISOMERS OF BUTENE	56.10	2 OLEFIN
35	43121	ISOMERS OF PENTENE	70.13	2 OLEFIN
36	43122	ISOMERS OF PENTANE	72.15	2 OLEFIN
37	43203	ETHYLENE	28.05	2 OLEFIN
38	43205	PROPYLENE	42.08	2 OLEFIN
39	43208	PROPADIENE	40.06	2 OLEFIN
40	43213	BUTENE	56.10	2 OLEFIN

41	43218	1.3-BUTADIENE	54.09	2 OLEFIN
42	43223	3-METHYL-1-BUTENE	70.14	2 OLEFIN
43	43224	1-PENTENE	70.13	2 OLEFIN
44	43228	2-METHYL-2-BUTENE	70.13	2 OLEFIN
45	43245	1-HEXENE	84.16	2 OLEFIN
46	45101	NAPHTHA	114.00	3 AROMATIC
47	45102	ISOMERS OF XYLENE	106.16	3 AROMATIC
48	45103	DIMETHYLETHYLBENZENE	134.00	3 AROMATIC
49	45104	ISOMERS OF ETHYLTOLUENE	120.19	3 AROMATIC
50	45105	ISOMERS OF BUTYLBENZENE	134.21	3 AROMATIC
51	45106	ISOMERS OF DIETHYLBENZENE	134.21	3 AROMATIC
52	45107	ISOMERS OF TRIMETHYLBENZENE	120.19	3 AROMATIC
53	45108	ISOMERS OF PROPYLBENZENE	120.19	3 AROMATIC
54	45202	TOLUENE	92.13	3 AROMATIC
55	45203	ETHYLBENZENE	106.16	3 AROMATIC
56	45207	1.3.5-TRIMETHYLBENZENE	120.19	3 AROMATIC
57	45220	STYRENE	104.14	3 AROMATIC
58	45221	A-METHYLSTYRENE	118.15	3 AROMATIC
59	45225	1,2,3-TRIMETHYLBENZENE	111.00	3 AROMATIC
60	45801	CHLOROBENZENE	112.56	3 AROMATIC
61	43264	CYCLOHEXANONE	98.15	4 CARBONYL
62	43320	DIACETONE ALCOHOL	116.16	4 CARBONYL

63	43502	FORMALDEHYDE	30.03	4 CARBONYL
64	43503	ACETALDEHYDE	44.05	4 CARBONYL
65	43510	BUTYRALDEHYDE	72.12	4 CARBONYL
66	43551	ACETONE	58.08	4 CARBONYL
67	43552	METHYL ETHYL KETONE	72.10	4 CARBONYL
68	43559	METHYL N-BUTYL KETONE	100.16	4 CARBONYL
69	43560	METHYL ISOBUTYL KETONE	100.16	4 CARBONYL
70	43000	UNIDENTIFIED HYDROCARBONS	86.00	5 MISCELLANEOUS
71	43119	LACTOL SPIRITS	114.00	5 MISCELLANEOUS
72	43123	TERPENES	136.23	5 MISCELLANEOUS
73	43206	ACETYLENE	26.04	5 MISCELLANEOUS
74	43209	METHYLACETYLENE	40.06	5 MISCELLANEOUS
75	43219	ETHYLACETYLENE	54.09	5 MISCELLANEOUS
76	43301	METHYL ALCOHOL	32.04	5 MISCELLANEOUS
77	43302	ETHYL ALCOHOL	46.07	5 MISCELLANEOUS
78	43303	N-PROPYL ALCOHOL	60.09	5 MISCELLANEOUS
79	43304	ISO-PROPYL ALCOHOL	60.09	5 MISCELLANEOUS
80	43305	N-BUTYL ALCOHOL	74.12	5 MISCELLANEOUS
81	43306	ISO-BUTYL ALCOHOL	74.12	5 MISCELLANEOUS
82	43308	BUTYL CELLOSOLVE	102.00	5 MISCELLANEOUS
83	43309	TERT-BUTYL ALCOHOL	74.12	5 MISCELLANEOUS
84	43310	METHYL CELLOSOLVE	76.11	5 MISCELLANEOUS

85	43311	CELLOSOLVE	90.12	5 MISCELLANEOUS
86	43351	ETHYL ETHER	74.12	5 MISCELLANEOUS
87	43367	GLYCOL ETHER	62.07	5 MISCELLANEOUS
88	43368	GLYCOL	62.07	5 MISCELLANEOUS
89	43369	PROPYLENE GLYCOL	76.00	5 MISCELLANEOUS
90	43370	ETHYLENE GLYCOL	62.07	5 MISCELLANEOUS
91	43390	TETRAHYDROFURAN	72.10	5 MISCELLANEOUS
92	43404	ACETIC ACID	60.05	5 MISCELLANEOUS
93	43432	METHYL ACETATE	74.08	5 MISCELLANEOUS
94	43433	ETHYL ACETATE	88.10	5 MISCELLANEOUS
95	43434	PROPYL ACETATE	102.13	5 MISCELLANEOUS
96	43435	N-BUTYL ACETATE	116.16	5 MISCELLANEOUS
97	43438	ETHYL ACRYLATE	100.11	5 MISCELLANEOUS
98	43443	CELLOSOLVE ACETATE	132.00	5 MISCELLANEOUS
99	43444	ISOPROPYL ACETATE	104.00	5 MISCELLANEOUS
100	43445	METHYL AMYL ACETATE	140.00	5 MISCELLANEOUS
101	43446	ISOBUTYL ACETATE	116.16	5 MISCELLANEOUS
102	43450	DIMETHYL FORMAMIDE	73.09	5 MISCELLANEOUS
103	43451	ISOBUTYL ISOBUTYRATE	144.21	5 MISCELLANEOUS
104	43452	2-ETHOXYETHYL ACETATE	132.00	5 MISCELLANEOUS
105	43601	ETHYLENE OXIDE	44.05	5 MISCELLANEOUS
106	43602	PROPYLENE OXIDE	58.08	5 MISCELLANEOUS

07	43704	ACRYLONITRILE	55.00	5 MISCELLANEOUS
108	43721	ETHYLAMINE	45.09	5 MISCELLANEOUS
109	43740	TRIMETHYL AMINE	59.11	5 MISCELLANEOUS
110	43802	DICHLOROMETHANE	84.94	5 MISCELLANEOUS
111	43807	CARBON TETRABROMIDE	331.67	5 MISCELLANEOUS
112	43811	TRICHLOROFLUOROMETHANE	137.37	5 MISCELLANEOUS
113	43812	ETHYL CHLORIDE	64.52	5 MISCELLANEOUS
114	43813	1,1-DICHLOROETHANE	98.97	5 MISCELLANEOUS
115	43817	PERCHLOROETHYLENE	165.83	5 MISCELLANEOUS
116	43819	METHYLENE BROMIDE	173.85	5 MISCELLANEOUS
117	43822	TRIMETHYLFLUOROSILANE	92.00	5 MISCELLANEOUS
118	43823	DICHLORDIFLUOROMETHANE	120.91	5 MISCELLANEOUS
119	43824	TRICHLOROETHENE	13.14	5 MISCELLANEOUS
120	43860	VINYL CHLORIDE	62.50	5 MISCELLANEOUS
121	45300	PHENOLS	94.11	5 MISCELLANEOUS
122	45401	XYLENE BASE ACIDS	230.00	5 MISCELLANEOUS
123	46201	1,4-DIOXANE	88.12	5 MISCELLANEOUS
124	43201	METHANE	16.04	6 METHANE
125	43202	ETHANE	30.07	7 NON-REACTIVE
126	43702	ACETRONITRILE	41.05	7 NON-REACTIVE
127	43801	METHYL CHLORIDE	50.49	7 NON-REACTIVE
128	43803	CHLOROFORM	119.39	7 NON-REACTIVE

129	43814	1,1,1-TRICHLOROETHANE	133.42	7 NON-REACTIVE
130	43815	ETHYLENE DICHLORIDE	99.00	7 NON-REACTIVE
131	43820	1.1.2-TRICHLOROETHANE	131.66	7 NON-REACTIVE
132	43821	TRICHLOROTRIFLUOROETHANE	187.38	7 NON-REACTIVE
133	45201	BENZENE	78.11	7 NON-REACTIVE

APPENDIX I-C

ORGANIC SPECIES BY SOURCES

Table I-C is a breakdown of the organic species detected during the KVB, Inc. test program on control of Hydrocarbon Emissions from Stationary Sources in the California South Coast Air Basin. This table lists the organic specie, its chemical class, the concentration levels found and the sources that emitted that compound.

TABLE I-C-A. TEST RESULTS BY SPECIES, ALCOHOLS

Name	Chem. Class	Concentrations, ppm measured	Source Type
Methyl Alcohol	5	1 - 100	Appliance enamel, Flexograph ink, Landfill, Printed circuit stripper
Ethyl Alcohol	5	0.1 - 10	Appliance enamel, Flexograph ink
Isopropyl Alcohol	5	0.1 - 1.0	Lithograph ink inlet to control only (thermo burner)
n Butyl Alcohol	5	1 - 10	Appliance enamel
Isobutyl Alcohol	5	0.1 - 1.0	Appliance enamel

TABLE I-C-B. TEST RESULTS BY SPECIES, KETONES

Name	Chem. Class	Concentrations, ppm measured	Source Type
Acetone	4	0.1 - 100	Adhesives, Appliance enamel, Flexograph ink, Landfill gas, Plastics coatings, Power plant combustion, Sewage gas, Water based paint
Methyl Ethyl Ketone	4	1 - 100	Appliance enamel, Plastics coatings
Methyl Isobutyl Ketone	4	1 - 10,000	Magnetic tape coating

TABLE I-C-C. TEST RESULTS BY SPECIES, ESTERS (ACETATES)

Name	Chem. Class	Concentrations, ppm measured	Source Type
Ethyl Acetate	5	0.1 - 10	Adhesives, Landfill gas, Water based paint
n Propyl Acetate	5	10 - 100	Flexograph ink
Isopropyl Acetate	5	0.1 - 100	Flexograph ink
n Butyl Acetate	5	10 - 100	Appliance enamel

TABLE I-C-D. TEST RESULTS BY SPECIES, HALO-COMPOUNDS

Name	Chem. Class	Concentrations, ppm measured	Source Type
Trichloro-fluoro-methane (Freon 11)	5	10,000 - 100,000	Refrigerant fill line gas
Dichloro-difluoro-methane	5	100,000 - 1,000,000	Refrigerant fill line gas
Methylene Chloride (dichloromethane)	5	1 - 10,000	Landfill gas, Lithograph ink, Printed circuit stripper solvent, Rubber masking paint
1,1,1-Trichloro-methane (methylchloroform)	7	1 - 1,000	Metal degreaser fluid, Printed circuit stripper
Vinyl Chloride	5	0.1 - 1.0	Landfill gas
Methyl Chloride	7	1 - 10	Printed circuit, Process Plant Background
1,2 Dichloro-ethylene (Acetylene dichloride)	5	1 - 10	Landfill gas
Perchloroethylene (tetrachloroethylene)	5	0.1 - 1,000	Adhesive, Appliance enamel, Landfill gas, Metal degreaser fluid, Rubber masking plant
Trimethylfluorosilane	5	0.1 - 10	Steel furnace gases

TABLE I-C-E. TEST RESULTS BY SPECIES, AROMATICS

Name	Chem. Class	Concentrations, ppm measured	Source Type
Benzene	7	1 - 10 10 - 100 100 - 1,000 1,000 - 10,000	Appliance enamel paint; Automotive water based paint; Coke oven gas; Crude oil, heavy API°, gas; Crude oil, light API°, gas; Dip enamel paint; Flexograph ink; Gasoline; Lacquer paint, automotive; Landfill gas; Natural gas combustion; Oil field gas drier; Oil field sump; Paving asphalt; Refinery process gas; Refinery pump seal leak; Refinery sour water; Refinery stock for blending; Roofing tar; Rotogravure ink; Rubber solvent; Stripper solvent for printed circuits; Vinyl adhesive
Toluene	3	1 - 10 10 - 100 100 - 1,000 1,000 - 10,000	Appliance enamel paint, Automotive water based paint, Automotive lacquer paint, Dip enamel paint, Flexograph ink, Gasoline, Landfill gas, Natural gas pilot light combustion, Process gas combustion, Refinery blending stock, Refinery process gas, Refinery pump leak, Refinery sour water, Roofing tar, Rotogravure ink
Xylenes	3	1 - 10 10 - 100 100 - 1,000	Appliance enamel paint, Chemical blending process, Dip enamel paint, Flexograph ink, Gasoline, Landfill gas, Refinery blend stock, Refinery pump leak, Rotogravure ink
Ethylbenzene	3	1 - 10	Appliance enamel paint

TABLE I-C-F. TEST RESULTS BY SPECIES, ALDEHYDES

Name	Chem. Class	Concentrations, ppm measured	Source Type
Formaldehyde	4	1 - 100	Combustion Sources: Appliance enamel oven afterburner, Gas combustion, Gas turbine, Lithograph ink afterburner, Natural gas IC engine, Pilot burner gas, Power plant boiler oil, Refinery CO boiler, Refinery process heater, Sewage-sludge gas burning IC engine, Solvent based automotive paint oven afterburner-catalytic afterburner, Water based automotive paint afterburner, Water based automotive base coat spray booth, Water based automotive base coat fume incinerator

TABLE I-C-G. TEST RESULTS BY SPECIES, OLEFIN OXIDE

Name	Chem. Class	Concentrations, ppm measured	Source Type
1,4 Dioxane (Diethylene dioxide	5	0.1 - 1.0	Vapor degreaser solvent

TABLE I-C-H. TEST RESULTS BY SPECIES, ACETYLENES

Name	Chem. Class	Concentrations, ppm measured	Source Type
Acetylene	5	1 - 10	Steel processing coke ovens, sintering plant

TABLE I-C-I. TEST RESULTS BY SPECIES, CYCLOPARAFFINS

Name	Chem. Class	Concentrations, ppm measured	Source Type
Cycloparaffins	1	1 - 100%	Appliance enamel paint; Automotive solvent based paint, primer, top coat; Crude oil, light API°, heavy API°, wet and dry gases; Dip enamel paint; Gasoline; Landfill gas; Paving asphalt; Refinery blend stock; Roofing tar; Rubber adhesive; Rubber solvent; Rotogravure ink

TABLE I-C-J. TEST RESULTS BY SPECIES, OLEFINS

Name	Chem. Class	Concentrations, ppm measured	Source Type
Ethylene	2	1 ppm to 100%	Appliance enamel paint; Automotive paint, solvent based primer oven, afterburner; Automotive paint, solvent based top coat oven, catalytic afterburner; Automotive paint, water based primer oven; Coke oven gas; Gasoline; Lithograph ink catalytic afterburner; Natural gas; Paving asphalt; Refinery process gas; Roofing tar; Sewage sludge gas, IC engines
Propylene Butene Pentene, etc.	2	1 ppm to 100%	Appliance enamel paint; Automotive solvent based primer paint; Coke oven gas; Crude oil, heavy API°, wet and dry gas; Flexograph ink oven; Gasoline; Landfill gas; Paving asphalt; Refinery blend stock, process gas, process gas heater; Sewage gas; Sintering plant, Steel mill
Terpenes	5	10 - 100	Landfill gas

TABLE I-C-K. TEST RESULTS BY SPECIES, PARAFFINS

Name	Chem. Class	Concentrations, ppm measured	Source Type
Methane	6	1 ppm to 100%	Adhesives; Appliance enamel; Asphalt processing; Automotive solvent based primer paint oven and afterburner, top coat oven catalytic afterburner; Automotive water based basecoat paint, top coat paint and oven; Coke oven gas; Crude oil, light API°, heavy API°. wet gas, dry gas; Degreaser, Flexograph ink oven; Gas turbine, Gasoline; Landfill gas; Lithograph ink catalytic afterburner, thermo afterburner; Natural gas; Paving asphalt; Power plants; Refinery fugitives, process gas, process heaters, CO boiler; Roofing tar; Rotogravure ink; Sewage Gas; Stripping solvent for printed circuits
Ethane Propane C_1 - C_3	7 1		
C_4 and higher and their isomers	1	1 ppm to 100%	Adhesive, vinyl; Appliance enamel paint; Automotive solvent based paint, primer, topcoat, catalytic afterburner, thermo afterburner; Automotive water based paints, undercoat, topcoat, ovens, afterburner incinerator; Automotive lacquer paint; Cleaning solvent, Stoddard; Crude oil, light API°, heavy API°. wet gas, dry gas; Degreaser; Flexograph ink oven; Gasoline; Landfill gas; Lithograph afterburners; Paving asphalt; Refinery blend stock, process gas, process heater; Rotogravure ink, Roofing tar; Rubber adhesive; Rubber solvent; Stripper solvent for printed circuit board

APPENDIX I-D

NEDS SOURCE CLASSIFICATION CODES

EXTCOMB BOILER	*ELECTRIC GENERATN	POUNDS EMITTED PER UNIT PART		SOX		NOX	HC	CO	UNITS
ANTHRACITE COAL									
1-01-001-01	>100MMBTU PULVIZD	17.0	A	38.0	S	18.0	0.03	1.00	TONS BURNED
1-01-001-02	>100MMBTU STOKERS	2.00	A	38.0	S	10.5	0.20	6.00	TONS BURNED
1-01-001-03	10-100MMBTU PULVD	17.0	A	38.0	S	18.0	0.03	1.00	TONS BURNED
1-01-001-04	10-100MMBTU STOKER	2.00	A	38.0	S	10.5	0.20	6.00	TONS BURNED
1-01-001-05	<10MMBTU PULVIZED	17.0	A	38.0	S	18.0	0.03	1.00	TONS BURNED
1-01-001-06	<10MMBTU STOKER	2.00	A	38.0	S	6.00	0.20	10.0	TONS BURNED
1-01-001-99	OTHER/NOT CLASIFD	17.0	A	38.0	S	18.0	0.03	1.00	TONS BURNED
BITUMINOUS COAL									
1-01-002-01	>100MMBTU PULVWET	13.0	A	38.0	S	30.0	0.30	1.00	TONS BURNED
1-01-002-02	>100MMBTU PULVDRY	17.0	A	38.0	S	18.0	0.30	1.00	TONS BURNED
1-01-002-03	>100MMBTU CYCLONE	2.00	A	38.0	S	55.0	0.30	1.00	TONS BURNED
1-01-002-04	>100MMBTU SPDSTKR	13.0	A	38.0	S	15.0	1.00	2.00	TONS BURNED
1-01-002-05	>100MMBTU/HR OFSK	5.00	A	38.0	S	15.0	1.00	2.00	TONS BURNED
1-01-002-06	10-100MMBTU PULWT	13.0	A	38.0	S	30.0	0.30	1.00	TONS BURNED
1-01-002-07	10-100MMBTU PULDY	17.0	A	38.0	S	18.0	0.30	1.00	TONS BURNED
1-01-002-08	10-100MMBTU OFSTK	5.00	A	38.0	S	15.0	1.00	2.00	TONS BURNED
1-01-002-09	10-100MMBTU UFSTK	5.00	A	38.0	S	15.0	1.00	2.00	TONS BURNED
1-01-002-10	<10MMBTU OFSTOKER	2.00	A	38.0	S	6.00	3.00	10.0	TONS BURNED
1-01-002-11	<10MMBTU UFSTOKER	2.00	A	38.0	S	6.00	3.00	10.0	TONS BURNED
1-01-002-12	<10MMBTU PULV-DRY	17.0	A	38.0	S	18.0	0.30	1.00	TONS BURNED
1-01-002-99	OTHER/NOT CLASIFD	16.0	A	38.0	S	18.0	0.30	5.50	TONS BURNED
LIGNITE									
1-01-003-01	>100MMBTU PULVWET	6.50	A	30.0	S	13.0	0.30	1.00	TONS BURNED
1-01-003-02	>100MMBTU PULVDRY	6.50	A	30.0	S	13.0	0.30	1.00	TONS BURNED
1-01-003-03	>100MMBTU CYCLONE	6.50	A	30.0	S	17.0	0.30	1.00	TONS BURNED
1-01-003-04	>100MMBTU OF STKR	6.50	A	30.0	S	13.0	0.30	2.00	TONS BURNED
1-01-003-05	>100MMBTU UF STKR	6.50	A	30.0	S	13.0	0.30	2.00	TONS BURNED
1-01-003-06	>100MMBTU SPDSTKR	6.50	A	30.0	S	13.0	0.30	2.00	TONS BURNED
1-01-003-07	10-100MMBTU DYPUL	6.50	A	30.0	S	13.0	0.30	1.00	TONS BURNED
1-01-003-08	10-100MMBTU WTPUL	6.50	A	30.0	S	13.0	0.30	1.00	TONS BURNED
1-01-003-09	10-100MMBTU OFSTK	6.50	A	30.0	S	13.0	1.00	2.00	TONS BURNED
1-01-003-10	10-100MMBTU UFSTK	6.50	A	30.0	S	13.0	1.00	2.00	TONS BURNED
1-01-003-11	10-100MMBTUSPDSTK	6.50	A	30.0	S	13.0	1.00	2.00	TONS BURNED
1-01-003-12	<10MMBTU PULV DRY	6.50	A	30.0	S	13.0	3.00	10.0	TONS BURNED
1-01-003-13	<10MMBTU OF STOKR	6.50	A	30.0	S	13.0	3.00	10.0	TONS BURNED
1-01-003-14	<10MMBTU UF STOKR	6.50	A	30.0	S	13.0	3.00	10.0	TONS BURNED
1-01-003-15	<10MMBTU SPDSTOKR	6.50	A	30.0	S	13.0	3.00	10.0	TONS BURNED
RESIDUAL OIL									
1-01-004-01	>100MMBTU/HR GENL	8.00		157.	S	105.	2.00	3.00	1000GALLONS BURNED
1-01-004-02	10-100MMBTU/HRGNL	8.00		157.	S	105.	2.00	3.00	1000GALLONS BURNED
1-01-004-03	<10MMBTU/HR GENL	8.00		157.	S	105.	2.00	3.00	1000GALLONS BURNED
DISTILLATE OIL									
1-01-005-01	>100MMBTU/HR GENL	8.00		144.	S	105.	2.00	3.00	1000GALLONS BURNED
1-01-005-02	10-100MMBTU/HRGNL	8.00		144.	S	105.	2.00	3.00	1000GALLONS BURNED
1-01-005-03	<10MMBTU/HR GENL	8.00		144.	S	105.	2.00	3.00	1000GALLONS BURNED
NATURAL GAS									
1-01-006-01	>100MMBTU/HR	10.0		0.60		600.	1.00	17.0	MILLION CUBIC FEET BURNED
1-01-006-02	10-100MMBTU/HR	10.0		0.60		230.	1.00	17.0	MILLION CUBIC FEET BURNED
1-01-006-03	<10MMBTU/HR	10.0		0.60		120.	1.00	17.0	MILLION CUBIC FEET BURNED
PROCESS GAS									
1-01-007-01	>100MMBTU/HR	15.0		950.	S	600.	1.00	17.0	MILLION CUBIC FEET BURNED
1-01-007-02	10-100MMBTU/HR	15.0		950.	S	230.	1.00	17.0	MILLION CUBIC FEET BURNED
1-01-007-03	<10 MMBTU/HR	15.0		950.	S	120.	1.00	17.0	MILLION CUBIC FEET BURNED
COKE									
1-01-008-01	>100MMBTU/HR	17.0	A	38.0	S	18.0	0.03	1.00	TONS BURNED
WOOD/BARK WASTE									
1-01-009-01	BARK BOILER	75.0		1.50		10.0	2.00	2.00	TONS BURNED
1-01-009-02	WOOD/BARK BOILER	37.5		1.50		10.0	2.00	2.00	TONS BURNED
1-01-009-03	WOOD BOILER	10.0		1.50		10.0	5.00	10.0	TONS BURNED
BAGASSE									
1-01-011-01	>100MMBTU/HR	22.0		0.		2.00	2.00	2.00	TONS BURNED
1-01-011-02	10-100MMBTU/HR	22.0		0.		2.00	2.00	2.00	TONS BURNED
1-01-011-03	<10MMBTU/HR	22.0		0.		2.00	2.00	2.00	TONS BURNED
SLD WASTE-SPECIFY									
1-01-012-01	>100 MMBTU/HR								TONS BURNED
1-01-012-02	10-100 MMBTU/HR								TONS BURNED
1-01-012-03	<10 MMBTU/HR								TONS BURNED

'A' INDICATES THE ASH CONTENT, 'S' INDICATES THE SULFUR CONTENT OF THE FUEL ON A PERCENT BASIS (BY WEIGHT)

		POUNDS EMITTED PER UNIT PART		SOX		NOX	HC	CO	UNITS
EXCOMB BOILER	**ELECTRIC GENERATN**								
LIQ WASTE-SPECIFY									
1-01-013-01	>100 MMBTU/HR								1000 GALLONS BURNED
1-01-013-02	10-100 MMBTU/HR								1000 GALLONS BURNED
1-01-013-03	<10 MMBTU/HR								1000 GALLONS BURNED
OTHER/NOT CLASIFD									
1-01-999-97	SPECIFY IN REMARK								MILLION CUBIC FEET BURNED
1-01-999-98	SPECIFY IN REMARK								1000 GALLON (LIQUID) BURNED
1-01-999-99	SPECIFY IN REMARK								TONS BURNED (SOLID)
EXTCOMB BOILER	**INDUSTRIAL**								
ANTHRACITE COAL									
1-02-001-01	>100MMBTU/HR PULV	17.0	A	38.0	S	18.0	0.03	1.00	TONS BURNED
1-02-001-02	>100MMBTU/HR STKR	2.00	A	38.0	S	10.0	0.20	6.00	TONS BURNED
1-02-001-03	10-100MMBTU PULVD	17.0	A	38.0	S	18.0	0.03	1.00	TONS BURNED
1-02-001-04	10-100MMBTU STKR	2.00	A	38.0	S	10.0	0.20	6.00	TONS BURNED
1-02-001-05	<10MMBTU/HR PULVD	17.0	A	38.0	S	18.0	0.03	1.00	TONS BURNED
1-02-001-06	<10MMBTU/HR STKR	2.00	A	38.0	S	6.00	0.20	10.0	TONS BURNED
1-02-001-07	<10MMBTU/HR HNDFR	10.0		38.0	S	3.00	2.50	90.0	TONS BURNED
1-02-001-99	OTHER/NOT CLASIFD	17.0	A	38.0	S	18.0	0.03	2.00	TONS BURNED
BITUMINOUS COAL									
1-02-002-01	>100MMBTU PULVWET	13.0	A	38.0	S	30.0	0.30	1.00	TONS BURNED
1-02-002-02	>100MMBTU PULVDRY	17.0	A	38.0	S	18.0	0.30	1.00	TONS BURNED
1-02-002-03	>100MMBTU CYCLONE	2.00	A	38.0	S	88.0	0.30	1.00	TONS BURNED
1-02-002-04	>100MMBTU SPDSTKR	13.0	A	38.0	S	15.0	1.00	2.00	TONS BURNED
1-02-002-05	10-100MMBTU SPSTK	5.00	A	38.0	S	15.0	1.00	2.00	TONS BURNED
1-02-002-06	10-100MMBTU UPSTK	5.00	A	38.0	S	15.0	1.00	2.00	TONS BURNED
1-02-002-07	10-100MMBTU PULWT	13.0	A	38.0	S	30.0	0.30	1.00	TONS BURNED
1-02-002-08	10-100MMBTU PULDY	17.0	A	38.0	S	18.0	0.30	1.00	TONS BURNED
1-02-002-09	10-100MMBTUSPDSTK	13.0	A	38.0	S	15.0	1.00	2.00	TONS BURNED
1-02-002-10	<10MMBTU SPD STKR	2.00	A	38.0	S	6.00	3.00	10.0	TONS BURNED
1-02-002-11	<10MMBTU UPD STKR	2.00	A	38.0	S	6.00	3.00	10.0	TONS BURNED
1-02-002-12	<10MMBTU PULV DRY	17.0	A	38.0	S	18.0	0.30	2.00	TONS BURNED
1-02-002-13	<10MMBTU SPD STKR	2.00	A	38.0	S	6.00	3.00	10.0	TONS BURNED
1-02-002-14	<10MMBTU HANDFIRE	20.0		38.0	S	3.00	20.0	90.0	TONS BURNED
1-02-002-99	OTHER/NOT CLASIFD	13.0	A	38.0	S	15.0	0.30	2.00	TONS BURNED
LIGNITE									
1-02-003-01	>100MMBTU PULVWET	6.50	A	30.0	S	13.0	0.30	1.00	TONS BURNED
1-02-003-02	>100MMBTU PULVDRY	6.50	A	30.0	S	13.0	0.30	1.00	TONS BURNED
1-02-003-03	>100MMBTU CYCLONE	6.50	A	30.0	S	17.0	0.30	1.00	TONS BURNED
1-02-003-04	>100MMBTU SPSTKR	6.50	A	30.0	S	13.0	1.00	2.00	TONS BURNED
1-02-003-05	>100MMBTU UPSTKR	6.50	A	30.0	S	13.0	1.00	2.00	TONS BURNED
1-02-003-06	>100MMBTU SPDSTKR	6.50	A	30.0	S	13.0	1.00	2.00	TONS BURNED
1-02-003-07	10-100MMBTU STPUL	6.50	A	30.0	S	13.0	0.30	1.00	TONS BURNED
1-02-003-08	10-100MMBTU WTPUL	6.50	A	30.0	S	13.0	0.30	1.00	TONS BURNED
1-02-003-09	10-100MMBTU SPSTK	6.50	A	30.0	S	13.0	1.00	2.00	TONS BURNED
1-02-003-10	10-100MMBTU UPSTK	6.50	A	30.0	S	13.0	1.00	2.00	TONS BURNED
1-02-003-11	10-100MMBTUSPDSTK	6.50	A	30.0	S	13.0	1.00	2.00	TONS BURNED
1-02-003-12	<10MMBTU PULV DRY	6.50	A	30.0	S	13.0	3.00	10.0	TONS BURNED
1-02-003-13	<10MMBTU SPSTOKR	6.50	A	30.0	S	13.0	3.00	10.0	TONS BURNED
1-02-003-14	<10MMBTU UPSTOKR	6.50	A	30.0	S	13.0	3.00	10.0	TONS BURNED
1-02-003-15	<10MMBTU HANDFIRE	6.50	A	30.0	S	13.0	20.0	90.0	TONS BURNED
1-02-003-16	<10MMBTU SPDSTKR	6.50	A	30.0	S	13.0	3.00	10.0	TONS BURNED
RESIDUAL OIL									
1-02-004-01	>100MMBTU/HR	23.0		157.	S	60.0	3.00	4.00	1000 GALLONS BURNED
1-02-004-02	10-100MMBTU/HR	23.0		157.	S	60.0	3.00	4.00	1000 GALLONS BURNED
1-02-004-03	<10MMBTU/HR	23.0		157.	S	60.0	3.00	4.00	1000 GALLONS BURNED
DISTILLATE OIL									
1-02-005-01	>100MMBTU/HR	15.0		142.	S	60.0	3.00	4.00	1000 GALLONS BURNED
1-02-005-02	10-100MMBTU/HR	15.0		142.	S	60.0	3.00	4.00	1000 GALLONS BURNED
1-02-005-03	<10MMBTU/HR	15.0		142.	S	60.0	3.00	4.00	1000 GALLONS BURNED
NATURAL GAS									
1-02-006-01	>100MMBTU/HR	10.0		0.60		600.	3.00	17.0	MILLION CUBIC FEET BURNED
1-02-006-02	10-100MMBTU/HR	10.0		0.60		230.	3.00	17.0	MILLION CUBIC FEET BURNED
1-02-006-03	<10MMBTU/HR	10.0		0.60		120.	3.00	17.0	MILLION CUBIC FEET BURNED
PROCESS GAS									
1-02-007-01	REFINERY >100								MILLION CUBIC FEET BURNED
1-02-007-02	REFINERY 10-100								MILLION CUBIC FEET BURNED
1-02-007-03	REFINERY <10								MILLION CUBIC FEET BURNED
1-02-007-04	BLAST FNC >100								MILLION CUBIC FEET BURNED
1-02-007-05	BLAST FNC 10-100								MILLION CUBIC FEET BURNED
1-02-007-06	BLAST FNC <10								MILLION CUBIC FEET BURNED

'A' INDICATES THE ASH CONTENT, 'S' INDICATES THE SULFUR CONTENT OF THE FUEL ON A PERCENT BASIS (BY WEIGHT)

		POUNDS EMITTED PER UNIT PART		SOX		NOX	HC	CO	UNITS
EXTCOMB BOILER	=INDUSTRIAL								
PROCESS GAS	CONTINUED								
1-02-007-07	COKE OVEN >100								MILLION CUBIC FEET BURNED
1-02-007-08	COKE OVEN 10-100								MILLION CUBIC FEET BURNED
1-02-007-09	COKE OVEN <10								MILLION CUBIC FEET BURNED
1-02-007-99	OTHER/NOT CLASIFD								MILLION CUBIC FEET BURNED
COKE									
1-02-008-02	10-100MMBTU/HR	2.00	A	38.0	S	15.0	0.20	2.00	TONS BURNED
1-02-008-03	<10MMBTU/HR	2.00	A	38.0	S	6.00	0.20	10.0	TONS BURNED
WOOD/BARK WASTE									
1-02-009-01	BARK BOILER	75.0		1.50		10.0	2.00	2.00	TONS BURNED
1-02-009-02	WOOD/BARK BOILER	37.5		1.50		10.0	2.00	2.00	TONS BURNED
1-02-009-03	WOOD BOILER	10.0		1.50		10.0	6.00	10.0	TONS BURNED
LIQ PETROLEUM GAS									
1-02-010-02	10-100MMBTU/HR	1.75		86.5	S	11.7	0.30	1.55	1000GALLONS BURNED
1-02-010-03	<10MMBTU/HR	1.75		86.5	S	11.7	0.30	1.55	1000GALLONS BURNED
BAGASSE									
1-02-011-01	>100 MMBTU/HR	22.0		0.		2.00	2.00	2.00	TONS BURNED
1-02-011-02	10-100MMBTU/HR	22.0		0.		2.00	2.00	2.00	TONS BURNED
1-02-011-03	<10MMBTU/HR	22.0		0.		2.00	2.00	2.00	TONS BURNED
SLD WASTE-SPECIFY									
1-02-012-01	>100 MMBTU/HR								TONS BURNED
1-02-012-02	100-100 MMBTU/HR								TONS BURNED
1-02-012-03	<10 MMBTU/HR								TONS BURNED
LIQ WASTE-SPECIFY									
1-02-013-01	>100 MMBTU/HR								1000 GALLONS BURNED
1-02-013-02	10-100 MMBTU/HR								1000 GALLONS BURNED
1-02-013-03	<10 MMBTU/HR								1000 GALLONS BURNED
OTHER/NOT CLASIFD									
1-02-999-97	SPECIFY IN REMARK								MILLION CUBIC FEET BURNED
1-02-999-98	SPECIFY IN REMARK								1000 GALLON BURNED (LIQUID)
1-02-999-99	SPECIFY IN REMARK								TONS BURNED (SOLID)
EXTCOMB BOILER	=COMMERCL-INSTUTNL								
ANTHRACITE COAL									
1-03-001-05	10-100MMBTU PULWT	13.0	A	38.0	S	30.0	0.03	1.00	TONS BURNED
1-03-001-06	10-100MMBTU PULDY	17.0	A	38.0	S	18.0	0.03	1.00	TONS BURNED
1-03-001-07	10-100MMBTUSPDSTK	13.0	A	38.0	S	15.0	1.00	2.00	TONS BURNED
1-03-001-08	<10MMBTU PULVIZED	17.0	A	38.0	S	18.0	0.03	1.00	TONS BURNED
1-03-001-09	<10MMBTU STOKER	2.00	A	38.0	S	6.00	0.20	10.0	TONS BURNED
1-03-001-10	<10MMBTU SPDSTOKR	2.00	A	38.0	S	18.0	1.00	10.0	TONS BURNED
1-03-001-99	OTHER/NOT CLASIFD	17.0	A	38.0	S	18.0	0.03	1.00	TONS BURNED
BITUMINOUS COAL									
1-03-002-05	10-100MMBTU PULWT	13.0	A	38.0	S	30.0	0.03	1.00	TONS BURNED
1-03-002-06	10-100MMBTU PULDY	17.0	A	38.0	S	18.0	0.03	1.00	TONS BURNED
1-03-002-07	10-100MMBTU OFSTK	5.00	A	38.0	S	15.0	1.00	2.00	TONS BURNED
1-03-002-08	10-100MMBTU UFSTK	5.00	A	38.0	S	15.0	1.00	2.00	TONS BURNED
1-03-002-09	10-100MMBTUSPDSTK	13.0	A	38.0	S	15.0	1.00	2.00	TONS BURNED
1-03-002-10	10-100MMBTU HANDFR	20.0		38.0	S	3.00	20.0	90.0	TONS BURNED
1-03-002-11	<10MMBTU OFSTOKER	2.00	A	38.0	S	6.00	3.00	10.0	TONS BURNED
1-03-002-12	<10MMBTU UFSTOKER	2.00	A	38.0	S	6.00	3.00	10.0	TONS BURNED
1-03-002-13	<10MMBTU SPDSTOKR	2.00	A	38.0	S	6.00	3.00	10.0	TONS BURNED
1-03-002-14	<10MMBTU HANDFIRE	20.0		38.0	S	3.00	20.0	90.0	TONS BURNED
1-03-002-99	OTHER/NOT CLASIFD	13.0	A	38.0	S	15.0	0.30	2.00	TONS BURNED
LIGNITE									
1-03-003-05	10-100MMBTU PULWT	6.50	A	30.0	S	13.0	1.00	2.00	TONS BURNED
1-03-003-06	10-100MMBTU PULDY	6.50	A	30.0	S	13.0	1.00	2.00	TONS BURNED
1-03-003-07	10-100MMBTU OFSTK	6.50	A	30.0	S	13.0	1.00	2.00	TONS BURNED
1-03-003-08	10-100MMBTU UFSTK	6.50	A	30.0	S	13.0	1.00	2.00	TONS BURNED
1-03-003-09	10-100MMBTUSPDSTK	6.50	A	30.0	S	13.0	1.00	2.00	TONS BURNED
1-03-003-10	<10MMBTU PULV-DRY	6.50	A	30.0	S	13.0	1.00	10.0	TONS BURNED
1-03-003-11	<10MMBTU OFSTOKER	6.50	A	30.0	S	13.0	3.00	10.0	TONS BURNED
1-03-003-12	<10MMBTU UFSTOKER	6.50	A	30.0	S	13.0	3.00	10.0	TONS BURNED
1-03-003-13	<10MMBTU SPDSTOKR	6.50	A	30.0	S	13.0	3.00	10.0	TONS BURNED
1-03-003-14	<10MMBTU HANDFIRE	6.50	A	30.0	S	13.0	20.0	90.0	TONS BURNED

'A' INDICATES THE ASH CONTENT, 'S' INDICATES THE SULFUR CONTENT OF THE FUEL ON A PERCENT BASIS (BY WEIGHT)

		POUNDS EMITTED PER UNIT PART	SOX	NOX	HC	CO	UNITS
EXTCOMB BOILER **********	-COMMERCL-INSTUTNL **********						
RESIDUAL OIL							
1-03-004-01	>100MMBTU/HR	23.0	157. S	60.0	3.00	4.00	1000 GALLONS BURNED
1-03-004-02	10-100MMBTU/HR	23.0	157. S	60.0	3.00	4.00	1000 GALLONS BURNED
1-03-004-03	<10MMBTU/HR	23.0	157. S	60.0	3.00	4.00	1000 GALLONS BURNED
DISTILLATE							
1-03-005-01	>100MMBTU/HR	15.0	142. S	60.0	3.00	4.00	1000 GALLONS BURNED
1-03-005-02	10-100MMBTU/HR	15.0	142. S	60.0	3.00	4.00	1000 GALLONS BURNED
1-03-005-03	<10MMBTU/HR	15.0	142. S	60.0	3.00	4.00	1000 GALLONS BURNED
NATURAL GAS							
1-03-006-01	>100MMBTU/HR	10.0	0.60	230.	6.00	20.0	MILLION CUBIC FEET BURNED
1-03-006-02	10-100MMBTU/HR	10.0	0.60	120.	6.00	20.0	MILLION CUBIC FEET BURNED
1-03-006-03	<10MMBTU/HR	10.0	0.60	80.0	6.00	20.0	MILLION CUBIC FEET BURNED
PROCESS GAS							
1-03-007-01	SEWAGE>100MMBTUHR						MILLION CUBIC FEET BURNED
1-03-007-02	SEWAGE 10-100						MILLION CUBIC FEET BURNED
1-03-007-03	SEWAGE<10MMBTU/HR						MILLION CUBIC FEET BURNED
1-03-007-99	OTHER/NOT CLASIFD						MILLION CUBIC FEET BURNED
WOOD/BARK WASTE							
1-03-009-01	BARK BOILER	79.0	1.50	10.0	2.00	8.00	TONS BURNED
1-03-009-02	WOOD/BARK BOILER	37.5	1.50	10.0	2.00	2.00	TONS BURNED
1-03-009-03	WOOD BOILER	10.0	1.50	10.0	6.00	10.0	TONS BURNED
LIQ PETROLEUM GAS							
1-03-010-02	10-100MMBTU/HR	1.85	86.5 S	9.60	0.75	1.95	1000 GALLONS BURNED
1-03-010-03	<10MMBTU/HR	1.85	86.5 S	9.60	0.75	1.95	1000 GALLONS BURNED
SLD WASTE-SPECIFY							
1-03-012-01	>100 MMBTU/HR						TONS BURNED
1-03-012-02	10-100 MMBTU/HR						TONS BURNED
1-03-012-03	<10 MMBTU/HR						TONS BURNED
LIQ WASTE-SPECIFY							
1-03-013-01	>100 MMBTU/HR						1000 GALLONS BURNED
1-03-013-02	10-100 MMBTU/HR						1000 GALLONS BURNED
1-03-013-03	<10 MMBTU/HR						1000 GALLONS BURNED
OTHER/NOT CLASIFD							
1-03-999-97	SPECIFY IN REMARK						MILLION CUBIC FEET BURNED
1-03-999-98	SPECIFY IN REMARK						1000 GALLON BURNED (LIQUID)
1-03-999-99	SPECIFY IN REMARK						TONS BURNED (SOLID)
EXTCOMB BOILER **********	-SPACE HEATER **********						
INDUSTRIAL							
1-05-001-01	ANTHRACITE COAL						TONS BURNED
1-05-001-02	BITUMINOUS COAL						TONS BURNED
1-05-001-03	LIGNITE						TONS BURNED
1-05-001-04	RESIDUAL OIL						1000 GALLONS BURNED
1-05-001-05	DISTILLATE OIL						1000 GALLONS BURNED
1-05-001-06	NATURAL GAS						MILLION CUBIC FEET BURNED
1-05-001-10	LIQ PETROLEUM GAS						1000 GALLONS BURNED
1-05-001-97	OTHER-SPECIFY						TONS BURNED
1-05-001-98	OTHER-SPECIFY						1000 GALLONS BURNED
1-05-001-99	OTHER-SPECIFY						MILLION CUBIC FEET BURNED
COMMERCL-INSTUTNL							
1-05-002-01	ANTHRACITE COAL						TONS BURNED
1-05-002-02	BITUMINOUS COAL						TONS BURNED
1-05-002-03	LIGNITE						TONS BURNED
1-05-002-04	RESIDUAL OIL						1000 GALLONS BURNED
1-05-002-05	DISTILLATE OIL						1000 GALLONS BURNED
1-05-002-06	NATURAL GAS						MILLION CUBIC FEET BURNED
1-05-002-10	LIQ PETROLEUM GAS						1000 GALLONS BURNED
1-05-002-97	OTHER-SPECIFY						TONS BURNED
1-05-002-98	OTHER-SPECIFY						1000 GALLONS BURNED
1-05-002-99	OTHER-SPECIFY						MILLION CUBIC FEET BURNED

'A' INDICATES THE ASH CONTENT, 'S' INDICATES THE SULPUR CONTENT OF THE FUEL ON A PERCENT BASIS (BY WEIGHT)

		POUNDS EMITTED PER UNIT					
		PART	SO2	NOX	HC	CO	UNITS
INTERNLCOMBUSTION -ELECTRIC GENERATN							
DISTILLATE OIL							
2-01-001-01	TURBINE	9.00	140. S	67.8	5.57	15.4	1000 GALLONS BURNED
2-01-001-02	RECIPROCATING		140. S				1000 GALLONS BURNED
NATURAL GAS							
2-01-002-01	TURBINE	14.0	990. S	913.	42.0	115.	MILLION CUBIC FEET
2-01-002-02	RECIPROCATING		990. S				MILLION CUBIC FEET
DIESEL							
2-01-003-01	RECIPROCATING	13.0	140. S	370.	37.0	225.	THOUSANDS OF GALLONS
2-01-003-02	TURBINE	5.00	140. S	67.8	5.57	15.4	1000 GALLONS BURNED
RESIDUAL OIL							
2-01-004-01	TURBINE		159. S				1000 GALLONS BURNED
JET FUEL							
2-01-005-01	TURBINE		6.20				1000 GALLONS BURNED
CRUDE OIL							
2-01-006-01	TURBINE		196. S				1000 GALLONS BURNED
PROCESS GAS							
2-01-007-01	TURBINE		950. S				MILLION CUBIC FEET
OTHER/NOT CLASIFD							
2-01-999-97	SPECIFY IN REMARK						MILLION CUBIC FEET BURNED
2-01-999-98	SPECIFY IN REMARK						1000 GALLONS BURNED
INTERNLCOMBUSTION -INDUSTRIAL							
DISTILLATE OIL							
2-02-001-01	TURBINE	5.00	140. S	67.8	5.57	15.4	1000 GALLONS BURNED
2-02-001-02	RECIPROCATING	33.5	144. S	469.	37.5	102.	1000 GALLONS BURNED
NATURAL GAS							
2-02-002-01	TURBINE	14.0	990. S	913.	42.0	115.	MILLION CUBIC FEET
2-02-002-02	RECIPROCATING		990. S				MILLION CUBIC FEET
GASOLINE							
2-02-003-01	RECIPROCATING	6.50	5.30	102.	161.	3,940.	1000 GALLONS BURNED
DIESEL FUEL							
2-02-004-01	RECIPROCATING	33.5	144. S	469.	37.5	102.	1000 GALLONS BURNED
2-02-004-02	TURBINE	5.00	140. S	67.8	5.57	15.4	1000 GALLONS BURNED
RESIDUAL OIL							
2-02-005-01	TURBINE		159. S				1000 GALLONS BURNED
JET FUEL							
2-02-006-01	TURBINE		6.20				1000 GALLONS BURNED
CRUDE OIL							
2-02-007-01	TURBINE		196. S				1000 GALLONS BURNED
PROCESS GAS							
2-02-008-01	TURBINE		950. S				MILLION CUBIC FEET
2-02-008-02	RECIPROCATING		950. S				MILLION CUBIC FEET BURNED
OTHER/NOT CLASIFD							
2-02-999-97	SPECIFY IN REMARK						MILLION CUBIC FEET BURNED
2-02-999-98	SPECIFY IN REMARK						1000 GALLONS BURNED

'A' INDICATES THE ASH CONTENT, 'S' INDICATES THE SULFUR CONTENT OF THE FUEL ON A PERCENT BASIS (BY WEIGHT)

		POUNDS EMITTED PER UNIT PART	SOX	NOX	HC	CO	UNITS
INTERNLCOMBUSTION -COMMERCL-INDSTUTNL							
DIESEL							
2-03-001-01	RECIPROCATING	33.5	144. S	469.	37.5	102.	THOUSANDS OF GALLONS
OTHER/NOT CLASIFD							
2-03-999-97	SPECIFY IN REMARK						MILLION CUBIC FEET BURNED
2-03-999-98	SPECIFY IN REMARK						1000 GALLONS BURNED
INTERNLCOMBUSTION -ENGINE TESTING							
AIRCRAFT							
2-04-001-01	TURBOJET	11.8	13.0	14.6	96.0	32.7	THOUSANDS OF GALLON/FUEL
ROCKET MOTOR							
2-04-002-01	SOLID PROPELLANT						TONS OF FUEL
OTHER/NOT CLASIFD							
2-04-999-97	SPECIFY IN REMARK						MILLION CUBIC FEET BURNED
2-04-999-98	SPECIFY IN REMARK						1000 GALLONS BURNED
2-04-999-99	SPECIFY IN REMARK						TONS BURNED
INDUSTRIAL PROCES -CHEMICAL MFG							
ADIPIC ACID PROD							
3-01-001-01	GENERAL-CYCLOHEX	0.	0.	12.0	0.	0.	TONS PRODUCED
3-01-001-99	OTHER/NOT CLASIFD						TONS PRODUCED
AMMONIA W/METHNTR							
3-01-002-01	PURGE GAS	0.	0.	0.	90.0	0.	TONS PRODUCED
3-01-002-02	STORAGE/LOADING	0.	0.	0.	0.	0.	TONS PRODUCED
AMMONIA W/COABSRB							
3-01-003-01	REGENERATOR EXIT	0.	0.	0.	0.	200.	TONS PRODUCED
3-01-003-02	PURGE GAS	0.	0.	0.	90.0	0.	TONS PRODUCED
3-01-003-03	STORAGE/LOADING	0.	0.	0.	0.	0.	TONS PRODUCED
3-01-003-99	OTHER/NOT CLASIFD						TONS PRODUCED
AMMONIUM NITRATE							
3-01-004-01	GENERAL		0.				TONS PRODUCED
3-01-004-99	OTHER/NOT CLASIFD						TONS PRODUCED
CARBON BLACK							
3-01-005-01	CHANNEL PROCESS	2,300.	0.	0.	11,500.	33,500.	TONS PRODUCED
3-01-005-02	THERMAL PROCESS	0.	0.	0.	0.	0.	TONS PRODUCED
3-01-005-03	FURNACE PROC GAS				1,800.	5,300.	TONS PRODUCED
3-01-005-04	FURNACE PROC OIL				400.	4,800.	TONS PRODUCED
3-01-005-05	FURNACE W/GAS/OIL	220.					TONS PRODUCED
3-01-005-99	OTHER/NOT CLASFD						TONS PRODUCT
CHARCOAL MFG							
3-01-006-01	PYROL/DISTIL/GENL	400.			100.	320.	TONS PRODUCED
3-01-006-99	OTHER/NOT CLASFD						TONS PRODUCT
CHLORINE							
3-01-007-01	GENERAL		0.				TONS PRODUCED
3-01-007-99	OTHER/NOT CLASIFD						TONS PRODUCED
CHLOR-ALKALI							
3-01-008-01	LIQUIFTN-DIAPHRGM		0.				100 TONS CHLORINE LIQUEFIED
3-01-008-02	LIQUIFTN-MERC CEL		0.				100 TONS CHLORINE LIQUEFIED
3-01-008-03	LOADING TNKCARVNT	0.	0.	0.	0.	0.	100 TONS CHLORINE LIQUEFIED
3-01-008-04	LOADING STGTNKVNT	0.	0.	0.	0.	0.	100 TONS CHLORINE LIQUEFIED
3-01-008-05	AIR-BLOW MC BRINE	0.	0.	0.	0.	0.	100 TONS CHLORINE LIQUEFIED
3-01-008-99	OTHER/NOT CLASIFD						100 TONS CHLORINE LIQUEFIED
CLEANING CHEMICLS							
3-01-009-01	SOAP/DET SPRYDRYR	90.0					TONS PRODUCED
3-01-009-10	SPECIALTY CLEANRS		0.				TONS PRODUCT
3-01-009-99	OTHERS/NOT CLASFD						TONS PRODUCED

'A' INDICATES THE ASH CONTENT, 'S' INDICATES THE SULFUR CONTENT OF THE FUEL ON A PERCENT BASIS (BY WEIGHT)

INDUSTRIAL PROCES	CHEMICAL MFG	POUNDS EMITTED PER UNIT PART	SOX	NOX	HC	CO	UNITS
EXPLOSIVES-TNT							
3-01-010-01	NITRATION REACTRS	0.	0.	160.	0.	0.	TONS PRODUCED
3-01-010-02	HNO3 CONCTRTRS	0.	0.	4.00	0.	0.	TONS PRODUCED
3-01-010-03	H2SO4 REGENERATR	0.	15.0	2.00	0.	0.	TONS PRODUCED
3-01-010-04	RED WATER INCIN	32.0	2.00	30.0	0.	0.	TONS PRODUCED
3-01-010-05	OPEN WASTE BURN						TONS BURNED
3-01-010-06	SELLITE EXHAUST	0.	0.70	0.	0.	0.	TONS PRODUCED
3-01-010-99	OTHER/NOT CLASIFD						TONS PRODUCED
HYDROCHLORIC ACID							
3-01-011-01	BYPRODUCT W/OSCRUB		0.				TONS FINAL ACID
3-01-011-02	BYPRODUCT W/SCRUB		0.				TONS FINAL ACID
3-01-011-99	OTHER/NOT CLASIFD						TONS FINAL ACID
HYDROFLUORIC ACID							
3-01-012-01	ROTRYKILNW/SCRUBR	0.					TONS ACID
3-01-012-02	ROTRYKILNW/OSCRUB	0.					TONS ACID
3-01-012-03	GRIND/DRY FLUOSPR	200.					TONS FLUORSPAR
3-01-012-99	OTHER/NOT CLASIFD						TONS ACID
NITRIC ACID							
3-01-013-01	AMMONIAOXIDATNOLD			82.5			TONS PURE ACID PRODUCED
3-01-013-02	AMMONIAOXIDATNNEW			4.50			TONS PURE ACID PRODUCED
3-01-013-03	NITACD CONCTR OLD			5.00			TONS PURE ACID PRODUCED
3-01-013-04	NITACD CONCTR NEW			0.20			TONS PURE ACID PRODUCED
3-01-013-05	UNCONTROLLED						TONS PURE ACID PRODUCED
3-01-013-06	W/CATYL/COMBUSTER						TONS PURE ACID PRODUCED
3-01-013-07	UNCONTROLLED						TONS PURE ACID PRODUCED
3-01-013-08	W/ABSORBERS						TONS PURE ACID PRODUCED
3-01-013-99	OTHER/NOT CLASIFD						TONS PURE ACID PRODUCED
PAINT MFG							
3-01-014-01	GENERAL	2.00			30.0		TONS PRODUCED
3-01-014-02	PIGMENT KILN						TONS PRODUCT
3-01-014-99	OTHER/NOT CLASFD						TONS PRODUCT
VARNISH MFG							
3-01-015-01	BODYING OIL GENL	0.			40.0		TONS PRODUCED
3-01-015-02	OLEORESINOUS GENL	0.			180.		TONS PRODUCED
3-01-015-03	ALKYD GENERAL	0.			160.		TONS PRODUCED
3-01-015-05	ACRYLIC GENERAL	0.			20.0		TONS PRODUCED
3-01-015-99	OTHER/NOT CLASFD						TONS PRODUCED
PHOS-ACID WETPROC							
3-01-016-01	REACTOR-UNCONTLD	0.					TONS PHOSPHATE ROCK
3-01-016-02	GYPSUM POND	0.					TONS PHOSPHATE ROCK
3-01-016-03	CONDENSER-UNCONTLD	0.					TONS PHOSPHATE ROCK
3-01-016-99	OTHER/NOT CLASFD						TONS PRODUCED
PHOS-ACID THERMAL							
3-01-017-01	GENERAL						TONS PHOSPHOROUS BURNED
3-01-017-99	OTHER/NOT CLASFD						TONS PRODUCED
PLASTICS							
3-01-018-01	PVC-GENERAL	35.0					TONS PRODUCED
3-01-018-02	POLYPROD-GENERAL	3.00					TONS PRODUCED
3-01-018-05	BAKELITE-GENERAL						TONS PRODUCT
3-01-018-99	OTHER/NOT CLASFD						TONS PRODUCED
PHTHALIC ANHYDRID							
3-01-019-03	UNCONTROLLED-GENL				32.0		TONS PRODUCED
PRINTING INK							
3-01-020-01	COOKING-GENERAL	0.			120.		TONS PRODUCED
3-01-020-02	COOKING-OILS	0.			40.0		TONS PRODUCED
3-01-020-03	COOKING-OLEORESIN	0.			180.		TONS PRODUCED
3-01-020-04	COOKING-ALKYDS	0.			160.		TONS PRODUCED
3-01-020-05	PIGMENT MIXINGGEN	2.00					TONS PIGMENT
3-01-020-99	OTHER/NOT CLASFD						TONS PRODUCED
SODIUM CARBONATE							
3-01-021-01	SOLVAY-NH3 RECVRY	0.					TONS PRODUCED
3-01-021-02	SOLVAY-HANDLING	6.00					TONS PRODUCED
3-01-021-10	TRONA-CALCINING						TONS PRODUCT
3-01-021-11	TRONA-DRYER						TONS PRODUCED
3-01-021-20	BRINE EVAP-GENERAL						TONS PRODUCED
3-01-021-99	OTHER/NOT CLASFD						TONS PRODUCED

'A' INDICATES THE ASH CONTENT, 'S' INDICATES THE SULFUR CONTENT OF THE FUEL ON A PERCENT BASIS (BY WEIGHT)

	POUNDS EMITTED PER UNIT PART	SOX	NOX	HC	CO	UNITS
INDUSTRIAL PROCES -CHEMICAL MFG						
H2SO4 -CHAMBER						
3-01-023-01 GENERAL				0.		TONS PURE ACID PRODUCED
H2SO4-CONTACT						
3-01-023-01 99.7 CONVERSION	2.50	4.00				TONS PURE ACID PRODUCED
3-01-023-04 99.5 CONVERSION	2.50	7.00				TONS PURE ACID PRODUCED
3-01-023-06 99.0 CONVERSION	2.50	14.0				TONS PURE ACID PRODUCED
3-01-023-08 98.0 CONVERSION	2.50	27.0				TONS PURE ACID PRODUCED
3-01-023-10 97.0 CONVERSION	2.50	40.0				TONS PURE ACID PRODUCED
3-01-023-12 96.0 CONVERSION	2.50	55.0				TONS PURE ACID PRODUCED
3-01-023-14 95.0 CONVERSION	2.50	70.0				TONS PURE ACID PRODUCED
3-01-023-16 94.0 CONVERSION	2.50	82.0				TONS PURE ACID PRODUCED
3-01-023-18 93.0 CONVERSION	2.50	96.0				TONS PURE ACID PRODUCED
3-01-023-99 OTHER/NOT CLASFD						TONS PRODUCED
SYNTHETIC FIBERS						
3-01-024-01 NYLON GENERAL				7.00		TONS FIBER
3-01-024-02 DACRON GENERAL				0.		TONS FIBER
3-01-024-03 ORLON						TONS PRODUCT
3-01-024-04 ELASTIC						TONS PRODUCT
3-01-024-05 TEFLON						TONS PRODUCT
3-01-024-06 POLYESTER						TONS PRODUCT
3-01-024-08 NOMEX						TONS PRODUCT
3-01-024-10 ACRYLIC						TONS PRODUCT
3-01-024-12 TYVEX						TONS PRODUCT
3-01-024-14 OLEFINS						TONS PRODUCT
3-01-024-99 OTHERS/NOT CLASFD						TONS PRODUCED
SEMISYNTHETICFIBR						
3-01-025-01 RAYON GENERAL				0.		TONS FIBER
3-01-025-05 ACETATE						TONS PRODUCED
3-01-025-10 VISCOSE						TONS PRODUCED
3-01-025-99 OTHERS/NOT CLASFD						TONS PRODUCED
SYNTHETIC RUBBER						
3-01-026-01 BUTADIENE-GENERAL						TONS PRODUCT
3-01-026-02 METHYLPROPENE-GNL						TONS PRODUCT
3-01-026-03 BUTYNE GENERAL						TONS PRODUCT
3-01-026-04 PENTADIENE-GENRL						TONS PRODUCT
3-01-026-05 DIMETHHEPTNE GENL						TONS PRODUCT
3-01-026-06 PENTANE-GENERAL						TONS PRODUCT
3-01-026-07 ETHANENITRILE-GEN						TONS PRODUCT
3-01-026-08 ACRYLONITRILE-GEN						TONS PRODUCT
3-01-026-09 ACROLEIN-GENERAL						TONS PRODUCT
3-01-026-20 AUTO TIRES GENERL						TONS PRODUCT
3-01-026-99 OTHER/NOT CLASFD						TONS PRODUCT
FERTILIZ AMONNITR						
3-01-027-01 PRILTWR-NEUTRLIZR	0.		0.			TONS PRODUCED
3-01-027-02 PRILLING TOWER	0.90		0.			TONS PRODUCED
3-01-027-03 PRILTWR-DRYCOOLRS	12.0		0.			TONS PRODUCED
3-01-027-04 GRANULAT-NEUTLIZR	0.		0.			TONS PRODUCED
3-01-027-05 GRANULATOR	0.40		0.48			TONS PRODUCED
3-01-027-06 GRANULAT-DRYCOOLR	7.00		3.00			TONS PRODUCED
FERTILIZ-NSUPPHOS						
3-01-028-01 GRIND-DRY	9.00					TONS PRODUCED
3-01-028-02 MAIN STACK	0.					TONS PRODUCED
FERTILIZ-TRPSPHOS						
3-01-029-01 RUN OF PILE	0.					TONS PRODUCED
3-01-029-02 GRANULAR	0.					TONS PRODUCED
FERTILIZ-DIAMPHOS						
3-01-030-01 DRYER-COOLERS	80.0					TONS PRODUCED
3-01-030-02 AMONIAT-GRANULATE	2.00					TONS PRODUCED
3-01-030-99 OTHER/NOT CLASIFD						TONS PRODUCED
TEREPTHALIC ACID						
3-01-031-01 HNO3-PARAXYLENEGEN			13.0			TONS PRODUCED
3-01-031-99 OTHER/NOT CLASIFD						TONS-PRODUCED
SULFUR(ELEMENTAL)						
3-01-032-01 MOD-CLAUS 2STAGE		280.				TONS PRODUCT
3-01-032-02 MOD-CLAUS 3STAGE		189.				TONS PRODUCT
3-01-032-03 MOD-CLAUS 4STAGE		146.				TONS PRODUCT
3-01-032-99 OTHER/NOT CLASIFD						TONS PRODUCT

'A' INDICATES THE ASH CONTENT, 'S' INDICATES THE SULFUR CONTENT OF THE FUEL ON A PERCENT BASIS (BY WEIGHT)

INDUSTRIAL PROCES -CHEMICAL MFG	POUNDS EMITTED PER UNIT PART	SOX	NOX	HC	CO	UNITS
PESTICIDES						
3-01-033-01 MALATHION						GALLONS OF PRODUCT
3-01-033-99 OTHER/NOT CLASIFD						TONS PRODUCED
AMINES/AMIDES						
3-01-034-01 GENERAL/OTHER						TONS PRODUCT
PIGMENT-INORGAN						
3-01-035-01 CALCINATION						TONS OF PRODUCT
3-01-035-99 OTHER/NOT CLASIFD						TONS OF PRODUCT
SODIUM SULFATE						
3-01-036-01 GENERAL/OTHER						TONS PRODUCT
3-01-036-02 KILNS						TONS PRODUCT
SODIUM SULFITE						
3-01-037-01 GENERAL/OTHER						TONS PRODUCT
3-01-037-02 KILNS						TONS PRODUCT
SODIUM BICARB						
3-01-038-01 GENERAL						TONS PRODUCT
LITHIUM HYDROXIDE						
3-01-039-01 GENERAL						TONS PRODUCT
FERTILIZER UREA						
3-01-040-01 GENERAL						TONS PRODUCT
NITROCELLULOSE						
3-01-041-01 REACTOR POTS	0.	1.30	21.0	0.	0.	TONS PRODUCED
3-01-041-02 H2SO4 CONCENTRTRS	0.	45.0	29.0	0.	0.	TONS PRODUCED
3-01-041-03 BOILING TUBS	0.	0.	2.00	0.	0.	TONS PRODUCED
3-01-041-99 OTHER/NOT CLASIFD				0.	0.	TONS PRODUCED
ADHESIVES						
3-01-050-01 GENL/COMPND UNKWN						TONS PRODUCT
ACETATE FLAKE						
3-01-090-99 OTHER/NOT CLASFD						TONS PRODUCT
ACETONE						
3-01-091-01 OTHER/NOT CLASFD						TONS PRODUCT
MALEIC ANHYDRIDE						
3-01-100-01 GENERAL/OTHER						TONS PRODUCT
POLYVINL PYRILIDON						
3-01-101-01 GENERAL/OTHER						TONS PRODUCT
SULFONIC ACID/ATS						
3-01-110-01 GENERAL/OTHER						TONS PRODUCT
ASBESTOS CHEMICAL						
3-01-111-01 CAULKING		0.	0.	0.	0.	TONS PRODUCT
3-01-111-02 SEALANTS		0.	0.	0.	0.	TONS PRODUCT
3-01-111-03 BRAKE LINE/GRIND		0.	0.	0.	0.	TONS PRODUCT
3-01-111-04 FIRE PROOF MFG		0.	0.	0.	0.	TONS PRODUCT
3-01-111-99 OTHERS/NOT CLASFD						TONS PRODUCT
FORMALDEHYDE						
3-01-120-01 SILVER CATALYST						TONS PRODUCT
3-01-120-02 MIXED OXIDE CTLST						TONS PRODUCT
ETHYLENE DICHLRDE						
3-01-125-01 OXYCHLORINATION						TONS PRODUCT
3-01-125-02 DIRECT CHLRNATION						TONS PRODUCT
AMMONIUM SULFATE						
3-01-130-01 NH3-H2SO4 PROCES						TONS PRODUCT
3-01-130-02 COKE OVEN BY-PROD						TONS PRODUCT
3-01-130-03 CAPROLCTM BY-PROD						TONS PRODUCT

'A' INDICATES THE ASH CONTENT, 'S' INDICATES THE SULFUR CONTENT OF THE FUEL ON A PERCENT BASIS (BY WEIGHT)

	POUNDS EMITTED PER UNIT PART	SOX	NOX	HC	CO	UNITS
INDUSTRIAL PROCES -CHEMICAL MFG						
WASTE GAS FLARES						
3-01-999-99 OTHER/NOT CLASIFD						MILLION CUBIC FEET BURNED
OTHER/NOT CLASIFD						
3-01-999-99 SPECIFY IN REMARK						TONS PRODUCT
INDUSTRIAL PROCES -FOOD/AGRICULTURAL						
ALFALFA DEHYDRATN						
3-02-001-01 GENERAL	60.0					TONS MEAL PRODUCED
3-02-001-99 OTHER/NOT CLASFD						TONS PRODUCT
COFFEE ROASTING						
3-02-002-01 DIRECTFIRE ROASTR	7.60		0.10			TONS GREEN BEANS
3-02-002-02 INDIRECTFIREROASTR	4.20		0.10			TONS GREEN BEANS
3-02-002-03 STONER/COOLER	1.90		0.			TONS GREEN BEANS
3-02-002-99 OTHER/NOT CLASFD						TONS PRODUCT
COFFEE-INSTANT						
3-02-003-01 SPRAY DRIER	1.90		0.			TONS GREEN BEANS
COTTON GINNING						
3-02-004-01 UNLOADING FAN	5.00	0.	0.	0.	0.	BALES COTTON
3-02-004-02 CLEANER	1.00	0.	0.	0.	0.	BALES COTTON
3-02-004-03 STICK/BURR MACHNE	3.00	0.	0.	0.	0.	BALES COTTON
3-02-004-99 OTHER/NOT CLASFD						BALES COTTON
FEED/GRAIN TERMNL						
3-02-005-01 SHIPING/RECEIVING	1.00	0.	0.	0.	0.	TONS GRAIN PROCESSED
3-02-005-02 TRANSFER/CONVEYNG	3.00	0.	0.	0.	0.	TONS GRAIN PROCESSED
3-02-005-03 SCREENING/CLEANNG	5.00	0.	0.	0.	0.	TONS GRAIN PROCESSED
3-02-005-04 DRYING	6.00					TONS GRAIN PROCESSED
FEED/GRAIN ENTRYE						
3-02-006-01 SHIPNG/RECEIVNG	5.00	0.	0.	0.	0.	TONS GRAIN PROCESSED
3-02-006-02 TRANSFER/CONVEYNG	3.00	0.	0.	0.	0.	TONS GRAIN PROCESSED
3-02-006-03 SCREENING/CLEANNG	5.00	0.	0.	0.	0.	TONS GRAIN PROCESSED
3-02-006-04 DRYING	7.00					TONS GRAIN PROCESSED
3-02-006-99 OTHER/NOT CLASIFD						TONS GRAIN PROCESSED
GRAIN PROCESSING						
3-02-007-01 CORN MEAL	5.00					TONS GRAIN PROCESSED
3-02-007-02 SOY BEAN	7.00					TONS GRAIN PROCESSED
3-02-007-03 BARLEY/WHEATCLEAN	0.20					TONS GRAIN PROCESSED
3-02-007-04 MILO CLEANER	0.40					TONS GRAIN PROCESSED
3-02-007-05 BARLEYFLOUR MILL	3.00					TONS GRAIN PROCESSED
3-02-007-06 WET CORN MILLING		0.				TONS OF PRODUCT
3-02-007-10 WHEAT FLOUR MILL		0.				TONS PRODUCT
3-02-007-99 OTHER/NOT CLASFD						TONS PROCESSED
FEED MANUFACTURE						
3-02-008-01 BARLEY FEED-GENL	3.00					TONS GRAIN PROCESSED
3-02-008-99 OTHER/NOT CLASFD						TONS PROCESSED
FERMENTATN-BEER						
3-02-009-01 GRAIN HANDLING	3.00			0.		TONS GRAIN PROCESSED
3-02-009-02 DRYING SPNT GRAIN	5.00					TONS GRAIN PROCESSED
3-02-009-03 BREWING						THOUSANDS OF GALLONS
3-02-009-96 OTHER/NOT CLASFD						GALLONS PRODUCT
3-02-009-99 OTHER/NOT CLASFD						TONS GRAIN PROCESSED
FERMENTATN-WHISKY						
3-02-010-01 GRAIN HANDLING	3.00			0.		TONS GRAIN PROCESSED
3-02-010-02 DRYING SPNT GRAIN	5.00					TONS GRAIN PROCESSED
3-02-010-03 AGING	0.			10.0		BARREL(80 GAL)
3-02-010-99 OTHER/NOT CLASFD						GALLONS PRODUCT
FERMENTATN-WINE						
3-02-011-01 GENERAL	0.			0.		GALLONS PRODUCT
FISH MEAL						
3-02-012-01 COOKERS-FRESHFISH	0.					TONS FISH MEAL PRODUCED
3-02-012-02 COOKERS-STALEFISH	0.					TONS FISH MEAL PRODUCED
3-02-012-03 DRIERS	0.10					TONS FISH SCRAP
3-02-012-99 OTHER/NOT CLASIFD						TONS PROCESSED

'A' INDICATES THE ASH CONTENT, 'S' INDICATES THE SULPUR CONTENT OF THE FUEL ON A PERCENT BASIS (BY WEIGHT)

		POUNDS EMITTED PER UNIT PART	SOX	NOX	HC	CO	UNITS
INDUSTRIAL PROCES -FOOD/AGRICULTURAL							
MEAT SMOKING							
3-02-013-01	GENERAL	0.30			0.07	0.60	TONS MEAT SMOKED
STARCH MFG							
3-02-014-01	GENERAL	8.00					TONS STARCH PRODUCED
SUGAR CANE PROCES							
3-02-015-01	GENERAL						TONS SUGAR PRODUCED
3-02-015-99	OTHER/NOT CLASIFD						TONS PROCESSED
SUGAR BEET PROCES							
3-02-016-01	DRYER ONLY						TONS RAW BEETS
3-02-016-99	OTHER/NOT CLASIFD						TONS RAW BEETS
PEANUT PROCESSING							
3-02-017-20	OIL/NOT CLASFD						TONS PRODUCT
3-02-017-99	OTHER/NOT CLASFD						TONS PROCESSED
CANDY/CONFECTNRY							
3-02-018-99	OTHER/NOT CLASFD						TONS PRODUCT
DAIRY PRODUCTS							
3-02-030-01	MILK SPRAY-DRYER						TONS PRODUCT
3-02-030-99	OTHER/NOT CLASFD						TONS PRODUCT
OTHER/NOT CLASIFD							
3-02-999-98	SPECIFY IN REMARK						TONS PROCESSED (INPUT)
3-02-999-99	SPECIFY IN REMARK						TONS PRODUCED (FINISHED)
INDUSTRIAL PROCES -PRIMARY METALS							
ALUMINUM ORE-BAUX							
3-03-000-01	CRUSHING/HANDLING	6.00					TONS OF ORE
AL ORE-ELECROREDN							
3-03-001-01	PREBAKE CELLS	81.3					TONS ALUMINUM PRODUCED
3-03-001-02	HORIZSTD SODERBRG	98.4					TONS ALUMINUM PRODUCED
3-03-001-03	VERTSTD SODERBERG	78.4					TONS ALUMINUM PRODUCED
3-03-001-04	MATERIALS HANDLNG	10.0					TONS ALUMINUM PRODUCED
3-03-001-05	ANODE BAKE FURNCE	3.00					TONS ALUMINUM PRODUCED
3-03-001-99	OTHER/NOT CLASFD						TONS ALUMINUM PRODUCED
AL ORE-CALC ALMTD							
3-03-002-01	GENERAL	200.					TONS ALUMINUM PRODUCED
COKE MET BYPRODUC							
3-03-003-01	GENERAL	3.50	4.00	0.04	4.20	1.27	TONS COAL CHARGED
3-03-003-02	OVEN CHARGING	1.90	0.02	0.03	2.50	0.40	TONS COAL CHARGED
3-03-003-03	OVEN PUSHING	0.60			0.20	0.07	TONS COAL CHARGED
3-03-003-04	QUENCHING	0.90					TONS COAL CHARGED
3-03-003-05	UNLOADING	0.40					TONS COAL CHARGED
3-03-003-06	UNDERFIRING		4.00				TONS COAL CHARGED
3-03-003-07	COAL CRUSH/HANDL						TONS COAL CHARGED
3-03-003-99	OTHER/NOT CLASFD						TONS COAL CHARGED
COKE MET-BEEHIVE							
3-03-004-01	GENERAL	200.	0.	0.	8.00	1.00	TONS COAL CHARGED
COPPER SMELTER							
3-03-005-01	TOTAL/GENERAL	135.	1,250.				TONS CONCENTRATED ORE
3-03-005-02	ROASTING	95.0	40.0				TONS CONCENTRATED ORE
3-03-005-03	SMELTING	20.0	320.				TONS CONCENTRATED ORE
3-03-005-04	CONVERTING	60.0	870.				TONS CONCENTRATED ORE
3-03-005-05	REFINING	10.0	0.				TONS CONCENTRATED ORE
3-03-005-06	ORE DRYER						TONS OF ORE
3-03-005-08	FINISH OPER-GENL						TONS PRODUCED
3-03-005-99	OTHER/NOT CLASFD						TONS CONCENTRATED ORE
FERALLOY OPEN FNC							
3-03-006-01	80% FESI	200.					TONS PRODUCED
3-03-006-02	75% FESI	315.					TONS PRODUCED
3-03-006-03	90% FESI	565.					TONS PRODUCED
3-03-006-04	SILICON METAL	625.					TONS PRODUCED
3-03-006-05	SILICOMANGANESE	195.					TONS PRODUCED

'A' INDICATES THE ASH CONTENT, 'B' INDICATES THE SULFUR CONTENT OF THE FUEL ON A PERCENT BASIS (BY WEIGHT)

		POUNDS EMITTED PER UNIT PART	SOX	NOX	HC	CO	UNITS
INDUSTRIAL PROCES -PRIMARY METALS							
FERROALLOY CONTINUED							
3-03-006-10	SCREENING			0.			TONS PROCESSED
3-03-006-11	ORE DRYER						TONS PROCESSED
3-03-006-12	LOWCARB CR-REACTR						TONS PROCESSED
3-03-006-99	OTHER/NOT CLASFD						TONS PRODUCED
FERALOY SEMCOVFNC							
3-03-007-01	FEROMANGANESE	45.0					TONS PRODUCED
3-03-007-02	GENERAL						TONS PRODUCED
IRON PRODUCTION							
3-03-008-01	BLAST FNC-ORECHG	121.	0.	0.	0.	1,760.	TONS PRODUCED
3-03-008-02	BLAST FNC-AGLCHG	44.0	0.	0.	0.	0.	TONS PRODUCED
3-03-008-03	SINTERING GENERAL	42.0				44.0	TONS PRODUCED
3-03-008-04	ORE-CRUSH/HANDLE			0.	0.		TONS OF ORE
3-03-008-05	SCARFING	1.00	0.	0.	0.	0.	TONS PROCESSED
3-03-008-06	SAND HANDLING OPN		0.				TONS HANDLED
3-03-008-07	MOLD OVENS						TONS SAND BAKED
3-03-008-08	SLAG CRUSH/HANDL						TONS HANDLED
3-03-008-99	OTHER/NOT CLASFD						TONS PRODUCED
STEEL PRODUCTION							
3-03-009-01	OPNHEARTH OXLANCE	17.4				0.	TONS PRODUCED
3-03-009-02	OPNHEARTH NOXLNCE	8.30				0.	TONS PRODUCED
3-03-009-03	BOF-GENERAL	61.0				139.	TONS PRODUCED
3-03-009-04	ELECT ARC W/LANCE	11.0				18.0	TONS PRODUCED
3-03-009-05	ELECT ARC NOLANCE	9.20				18.0	TONS PRODUCED
3-03-009-10	FINISH/PICKLING						TONS PRODUCED
3-03-009-11	FINISH/SOAK PITS						TONS PRODUCED
3-03-009-12	FINISH/GRIND,ETC						TONS PRODUCED
3-03-009-20	FINISH/OTHER						TONS PRODUCED
3-03-009-99	OTHER/NOT CLASFD						TONS PRODUCED
LEAD SMELTERS							
3-03-010-01	SINTERING	164.	423.	0.	0.	0.	TONS CONCENTRATED ORE
3-03-010-02	BLAST FURNACE	278.	34.9	0.	0.	0.	TONS CONCENTRATED ORE
3-03-010-03	REVERB FURNACE	15.4	0.	0.	0.	0.	TONS CONCENTRATED ORE
3-03-010-04	ORE CRUSHING	2.00	0.	0.	0.	0.	TONS OF ORE CRUSHED
3-03-010-05	MATERIALS HANDLNG	5.00	0.	0.	0.	0.	TONS OF LEAD PRODUCT
3-03-010-99	OTHER/NOT CLASFD						TONS CONCENTRATED ORE
MOLYBDENUM							
3-03-011-01	MINING-GENERAL			0.			HUNDREDS OF TONS MINED
3-03-011-02	MILLING-GENERAL			0.			TONS PRODUCT
3-03-011-99	PROCESS-OTHER						TONS PROCESSED
TITANIUM PROCESS							
3-03-012-01	CHLORINATION STAT		0.	0.	0.		TONS PRODUCT
3-03-012-99	OTHER/NOT CLASIFD						TONS PROCESSED
GOLD							
3-03-013-01	MINING/PROCESSING				0.		TONS ORE
BARIUM							
3-03-014-01	ORE GRIND			0.			TONS PROCESSED
3-03-014-02	REDUCTN KILN						TONS PROCESSED
3-03-014-03	DRIERS/CALCINERS						TONS PROCESSED
3-03-014-99	OTHER/NOT CLASFD						TONS PROCESSED
BERYLLIUM ORE							
3-03-015-01	STORAGE		0.	0.	0.	0.	TONS OF ORE
3-03-015-02	CRUSHING		0.	0.	0.	0.	TONS PROCESSED
3-03-015-03	MELTING				0.		TONS PROCESSED
3-03-015-04	QUENCH/HEAT TREAT		0.	0.	0.	0.	TONS PROCESSED
3-03-015-05	GRINDING		0.	0.	0.	0.	TONS PROCESSED
3-03-015-06	SULFATION/DISSOLV			0.	0.	0.	TONS PROCESSED
3-03-015-07	SINTERING				0.		TONS PROCESSED
3-03-015-08	VENTILATION				0.		TONS PROCESSED
3-03-015-09	LEACH/FILTER		0.	0.	0.	0.	TONS PROCESSED
3-03-015-99	OTHER/NOT CLASFD				0.		TONS PROCESSED
MERCURY MINING							
3-03-025-01	SURFACE BLASTING		0.	0.	0.	0.	TONS OF ORE
3-03-025-02	SURFACE DRILLING		0.	0.	0.	0.	TONS OF ORE
3-03-025-03	SURFACE HANDLING		0.	0.	0.	0.	TONS OF ORE
3-03-025-04	NATURAL VAPOR	0.	0.	0.	0.	0.	TONS OF ORE
3-03-025-05	STRIPPING		0.	0.	0.	0.	TONS REMOVED
3-03-025-06	LOADING		0.	0.	0.	0.	TONS OF ORE
3-03-025-07	CONVEY/HAULING		0.	0.	0.	0.	TONS OF ORE
3-03-025-04	UNLOADING		0.	0.	0.	0.	TONS OF ORE

'A' INDICATES THE ASH CONTENT, 'S' INDICATES THE SULFUR CONTENT OF THE FUEL ON A PERCENT BASIS (BY WEIGHT)

		POUNDS EMITTED PER UNIT PART	SOX	NOX	HC	CO	UNITS
INDUSTRIAL PROCES -PRIMARY METALS							
MERCURY MINING CONTINUED							
3-03-026-09	CONV/HAUL WASTE		0.	0.	0.	0.	TONS OF ORE
3-03-026-99	OTHER/NOT CLASFD						TONS OF ORE
MERCURY ORE PROCS							
3-03-026-01	CRUSHING		0.	0.	0.	0.	TONS PROCESSED
3-03-026-02	ROTARY FURNACE				0.		TONS PROCESSED
3-03-026-03	RETORT FURNACE				0.		TONS PROCESSED
3-03-026-04	CALCINE		0.	0.	0.	0.	TONS PROCESSED
3-03-026-05	BURNT ORE BIN		0.	0.	0.	0.	TONS PROCESSED
3-03-026-06	HOEING PROCESS		0.	0.	0. 2	0.	TONS PROCESSED
3-03-026-99	OTHER/NOT CLASFD						TONS PROCESSED
ZINC SMELTING							
3-03-030-01	GENERAL				0.		TONS PROCESSED
3-03-030-02	ROASTING/MULT-HRTH	120.	1,100.				TONS PROCESSED
3-03-030-03	SINTERING	90.0					TONS PROCESSED
3-03-030-04	HORIZ RETORTS	8.00					TONS PROCESSED
3-03-030-05	VERT RETORTS	100.					TONS PROCESSED
3-03-030-06	ELECTROLYTIC PROC	3.00					TONS PROCESSED
3-03-030-99	OTHER/NOT CLASFD						TONS PROCESSED
OTHER/NOT CLASFD							
3-03-999-99	SPECIFY IN REMARK						TONS PRODUCED
INDUSTRIAL PROCES -SECONDARY METALS							
ALUMINUM OPERATN							
3-04-001-01	SWEATINGFURNACE	14.5					TONS PRODUCED
3-04-001-02	SMELT-CRUCIBLE	1.90					TONS METAL PRODUCED
3-04-001-03	SMELT-REVERB FNC	4.30					TONS METAL PRODUCED
3-04-001-04	CHLORINATN STATN	12.5	0.	0.	0.	0.	TONS METAL PRODUCED
3-04-001-10	FOIL ROLLING					0.	TONS PRODUCT
3-04-001-11	FOIL CONVERTING					0.	TONS PRODUCED
3-04-001-20	CAN MANUFACTURE					0.	TONS PRODUCED
3-04-001-50	ROLL-DRAW-EXTRUDE					0.	TONS PRODUCED
3-04-001-99	OTHER/NOT CLASFD						TONS PRODUCED
BRASS/BRONZ MELT							
3-04-002-01	BLAST FNC	16.0					TONS CHARGE
3-04-002-02	CRUCIBLE FNC	12.0					TONS CHARGE
3-04-002-03	CUPOLA FNC	73.0					TONS CHARGE
3-04-002-04	ELECT INDUCTION	2.00					TONS CHARGE
3-04-002-05	REVERB FNC	70.0					TONS CHARGE
3-04-002-06	ROTARY FNC	60.0					TONS CHARGE
3-04-002-99	OTHER/NOT CLASIFD						TONS PRODUCED
GRAY IRON							
3-04-003-01	CUPOLA	17.0				145.	TONS METAL CHARGE
3-04-003-02	REVERB FNC	2.00				0.	TONS METAL CHARGE
3-04-003-03	ELECT INDUCTION	1.60				0.	TONS METAL CHARGE
3-04-003-05	ANNEALING OPERATN						TONS METAL CHARGE
3-04-003-30	MISC CAST-FABCTN						TONS PROCESSED
3-04-003-40	GRINDING-CLEANING		0.	0.	0.	0.	TONS PROCESSED
3-04-003-50	SAND HANDL-GENL						TONS HANDLED
3-04-003-99	OTHER/NOT CLASIFD						TONS METAL CHARGE
LEAD SMELT SEC							
3-04-004-01	POT FURNACE	0.80	0.	0.	0.	0.	TONS METAL CHARGED
3-04-004-02	REVERB FNC	147.	80.0	0.	0.	0.	TONS METAL CHARGED
3-04-004-03	BLAST/CUPOLA FNC	193.	53.0	0.	0.	0.	TONS METAL CHARGED
3-04-004-04	ROTARY REVERB FNC	70.0	0.	0.	0.	0.	TONS METAL CHARGED
3-04-004-08	LEAD OXIDE MFG						TONS PROCESSED
3-04-004-99	OTHER/NOT CLASIFD						TONS PROCESSED
LEAD BATTERY							
3-04-005-01	TOTAL-GENERAL	0.90	0.	0.	0.	0.	TONS OF BATTERIES PRODUCED
3-04-005-02	CASTING FURNACE	0.09	0.	0.	0.	0.	TONS OF BATTERIES PRODUCED
3-04-005-03	PASTE MIXER	0.21	0.	0.	0.	0.	TONS OF BATTERIES PRODUCED
3-04-005-04	THREE PROCES OPER	0.64	0.	0.	0.	0.	TONS OF BATTERIES PRODUCED
3-04-005-99	OTHER/NOT CLASIFD						TONS PROCESSED
MAGNESIUM SEC							
3-04-006-01	POT FURNACE	4.00					TONS PROCESSED
3-04-006-99	OTHER/NOT CLASIFD						TONS PROCESSED

'A' INDICATES THE ASH CONTENT, 'S' INDICATES THE SULFUR CONTENT OF THE FUEL ON A PERCENT BASIS (BY WEIGHT)

		POUNDS EMITTED PER UNIT PART	SOX	NOX	HC	CO	UNITS
INDUSTRIAL PROCES -SECONDARY METALS							
STEEL FOUNDRY							
3-04-007-01	ELECTRIC ARC FNC	13.0		0.20			TONS PROCESSED
3-04-007-02	OPEN HEARTH FNC	11.0		0.<1			TONS PROCESSED
3-04-007-03	OPEN HEARTH LANCD	10.0		0.			TONS PROCESSED
3-04-007-04	HEAT-TREAT FNC						TONS PROCESSED
3-04-007-05	INDUCTION FURNACE	0.10	0.	0.	0.	0.	TONS PROCESSED
3-04-007-06	SAND GRIND/HANDL						TONS HANDLED
3-04-007-10	FINISH/SOAK PITS						TONS PROCESSED
3-04-007-19	FINISH/NOT CLASFD						TONS PROCESSED
3-04-007-99	OTHER/NOT CLASIFD						TONS PROCESSED
ZINC SEC							
3-04-008-01	RETORT FNC	47.0					TONS PRODUCED
3-04-008-02	HORIZ MUFFLE FNC	45.0					TONS PRODUCED
3-04-008-03	POT FURNACE	0.10					TONS PRODUCED
3-04-008-04	KETTLE-SWEAT FNC	11.0					TONS PRODUCED
3-04-008-05	GALVANIZING KETTL	5.00					TONS PRODUCED
3-04-008-06	CALCINING KILN	89.0					TONS PRODUCED
3-04-008-07	CONCENTRATE DRYER						TONS PROCESSED
3-04-008-08	REVERB-SWEAT FNC	13.0					TONS PRODUCED
3-04-008-99	OTHER/NOT CLASIFD						TONS PROCESSED
MALLEABLE IRON							
3-04-009-01	ANNEALING OPERATN						TONS METAL CHARGE
3-04-009-99	OTHER/NOT CLASIFD						TONS METAL CHARGE
NICKEL							
3-04-010-01	FLUX FURNACE						TONS PROCESSED
3-04-010-99	OTHER/NOT CLASIFD						TONS PROCESSED
ZIRCONIUM							
3-04-011-01	OXIDE KILN						TONS PROCESSED
3-04-011-99	OTHER/NOT CLASIFD						TONS PROCESSED
FURNACE ELECTRODE							
3-04-020-01	CALCINATION						TONS PROCESSED
3-04-020-02	MIXING		0.	0.	0.	0.	TONS PROCESSED
3-04-020-03	PITCH TREATING		0.	0.			TONS PROCESSED
3-04-020-04	BAKE FURNACES						TONS PROCESSED
3-04-020-99	OTHER/NOT CLASIFD						TONS PROCESSED
MISC CAST&FABRCTN							
3-04-050-01	SPECIFY IN REMARK						TONS PRODUCED
OTHER/NOT CLASIFD							
3-04-999-99	SPECIFY IN REMARK						TONS PROCESSED
INDUSTRIAL PROCES -MINERAL PRODUCTS							
ASPHALT ROOFING							
3-05-001-01	BLOWING OPERATION	2.50			1.50	0.40	TONS SATURATED FELT PRODUCED
3-05-001-02	DIPPING ONLY	1.00			0.	0.	TONS SATURATED FELT PRODUCED
3-05-001-03	SPRAYING ONLY	3.00			0.	0.	TONS SATURATED FELT PRODUCED
3-05-001-04	DIPPING/SPRAYING	2.00			0.	0.	TONS SATURATED FELT PRODUCED
3-05-001-99	OTHER/NOT CLASIFD						TONS SATURATED FELT PRODUCED
ASPHALTIC CONCRET							
3-05-002-01	ROTARY DRYER	35.0					TONS PRODUCED
3-05-002-02	OTHER SOURCES	10.0	0.	0.	0.	0.	TONS PRODUCED
3-05-002-99	OTHER/NOT CLASIFD						TONS PRODUCED
BRICK MANUFACTURE							
3-05-003-01	DRYING-RAW MTL	70.0		0.			TONS PRODUCED
3-05-003-02	GRINDING-RAW MTL	74.0		0.			TONS PRODUCED
3-05-003-03	STORAGE-RAW MTL	34.0		0.			TONS PRODUCED
3-05-003-04	CURING GAS FIRED	0.07	0.02	0.29	0.03	0.07	TONS PRODUCED
3-05-003-05	CURING OIL FIRED	0.07	6.06 S	1.40	0.10	0.	TONS PRODUCED
3-05-003-06	CURING COAL FIRED	1.30 A	9.60 S	1.10	0.70	2.60	TONS PRODUCED
3-05-003-99	OTHER/NOT CLASIFD						TONS PRODUCED
CALCIUM CARBIDE							
3-05-004-01	ELECTRIC FNC	38.0	3.00				TONS PRODUCED
3-05-004-02	COKE DRYER	2.00	3.00				TONS PRODUCED
3-05-004-03	FNC ROOM VENTS	26.0	0.				TONS PRODUCED
3-05-004-99	OTHER/NOT CLASIFD						TONS PROCESSED

'A' INDICATES THE ASH CONTENT, 'S' INDICATES THE SULFUR CONTENT OF THE FUEL ON A PERCENT BASIS (BY WEIGHT)

		POUNDS EMITTED PER UNIT PART	SOX	NOX	HC	CO	UNITS
INDUSTRIAL PROCES -MINERAL PRODUCTS							
CASTABLE REFRACTY							
3-05-005-01	RAWMATL DRYER	30.0					TONS FEED MATERIAL
3-05-005-02	RAWMATL CRUSH/PRC	130.					TONS FEED MATERIAL
3-05-005-03	ELECTRIC ARC MELT	60.0					TONS FEED MATERIAL
3-05-005-04	CURING OVEN	0.20					TONS FEED MATERIAL
3-05-005-05	MOLD/SHAKEOUT	25.0					TONS FEED MATERIAL
3-05-005-99	OTHER/NOT CLASIFD						TONS FEED MATERIAL
CEMENT MFG DRY							
3-05-006-01	KILNS	96.0	3.00	0.50			BARRELS CEMENT PRODUCED
3-05-006-02	DRYERS/GRINDERETC	18.0					BARRELS CEMENT PRODUCED
3-05-006-03	KILNS-OIL FIRED	295.	14.4	2.60	0.	0.	TONS CEMENT PRODUCED
3-05-006-04	KILNS-GAS FIRED	295.	10.2	2.60	0.	0.	TONS CEMENT PRODUCED
3-05-006-05	KILNS-COAL FIRED	295.	23.8	2.60	0.	0.	TONS CEMENT PRODUCED
3-05-006-99	OTHER/NOT CLASIFD						TONS CEMENT PRODUCED
CEMENT MFG WET							
3-05-007-01	KILNS	93.0	3.00	0.50	0.	0.	BARRELS CEMENT PRODUCED
3-05-007-02	DRYERS/GRINDERETC	6.00					BARRELS CEMENT PRODUCED
3-05-007-03	KILNS-OIL FIRED	228.	14.4	2.60	0.	0.	TONS CEMENT PRODUCED
3-05-007-04	KILNS GAS FIRED	228.	10.2	2.60	0.	0.	TONS CEMENT PRODUCED
3-05-007-05	KILNS-COAL FIRED	228.	23.8	2.60	0.	0.	TONS CEMENT PRODUCED
3-05-007-99	OTHER/NOT CLASIFD						TONS CEMENT PRODUCED
CERAMIC/CLAY MFG							
3-05-008-01	DRYING	70.0					TONS INPUT TO PROCESS
3-05-008-02	GRINDING	76.0					TONS INPUT TO PROCESS
3-05-008-03	STORAGE	34.0					TONS INPUT TO PROCESS
3-05-008-99	OTHER/NOT CLASIFD						TONS PRODUCED
CLAY/FLYASHSINTER							
3-05-009-01	FLYASH	110.					TONS FINISHED PRODUCT
3-05-009-02	CLAY/COKE	55.0					TONS FINISHED PRODUCT
3-05-009-03	NATURAL CLAY	24.0					TONS FINISHED PRODUCT
3-05-009-99	OTHER/NOT CLASIFD						TONS PRODUCED
COAL CLEANING							
3-05-010-01	THERM/FLUID BED	20.0					TONS COAL DRIED
3-05-010-02	THERM/FLASH	14.0					TONS COAL DRIED
3-05-010-03	THERM/MULTILOUVRD	25.0					TONS COAL DRIED
3-05-010-99	OTHER/NOT CLASIFD						TONS COAL CLEANED
CONCRETE BATCHING							
3-05-011-01	GENERAL	0.20					CUBIC YARDS CONCRETE PRODUCED
3-05-011-20	ASBEST/CEMNT PDTS	0.20	0.	0.	0.	0.	TONS PRODUCT
3-05-011-21	ROAD SURFACE		0.	0.	0.	0.	TONS PRODUCT
3-05-011-99	OTHER/NOT CLASFD						TONS PRODUCT
FIBERGLASS MFG							
3-05-012-01	REVERBFNC-REGENEX	3.00					TONS MATERIAL PROCESSED
3-05-012-02	REVERBFNC-RECUPEX	1.00					TONS MATERIAL PROCESSED
3-05-012-03	ELECTRIC IND FNC	0.					TONS MATERIAL PROCESSED
3-05-012-04	FORMING LINE	50.0					TONS MATERIAL PROCESSED
3-05-012-05	CURING OVEN	7.00					TONS MATERIAL PROCESSED
3-05-012-99	OTHER/NOT CLASIFD						TONS PROCESSED
FRIT MFG							
3-05-013-01	ROTARY FNC GENL	16.0					TONS CHARGE
3-05-013-99	OTHER/NOT CLASIFD						TONS CHARGED
GLASS MFG							
3-05-014-01	SODALIME GENL FNC	2.00					TONS GLASS PRODUCED
3-05-014-10	RAW MAT REC/STORG						TONS PROCESSED
3-05-014-11	BATCHING/MIXING		0.	0.	0.	0.	TONS PROCESSED
3-05-014-12	MOLTEN MOLD TANKS		0.				TONS PROCESSED
3-05-014-99	OTHER/NOT CLASIFD						TONS PRODUCED
GYPSUM MFG							
3-05-015-01	RW MTL DRYER	40.0					TONS THROUGHPUT
3-05-015-02	PRIMARY GRINDER	1.00					TONS THROUGHPUT
3-05-015-03	CALCINER	90.0					TONS THROUGHPUT
3-05-015-04	CONVEYING	0.70					TONS THROUGHPUT
3-05-015-99	OTHER/NOT CLASIFD						TONS THROUGHPUT
LIME MFG							
3-05-016-01	PRIMARY CRUSHING	31.0	0.	0.	0.	0.	TONS PROCESSED
3-05-016-02	SECNDRY CRUSHING	2.00	0.	0.	0.	0.	TONS PROCESSED
3-05-016-03	CALCINING-VERTKILN	8.00					TONS PROCESSED

'A' INDICATES THE ASH CONTENT, 'S' INDICATES THE SULFUR CONTENT OF THE FUEL ON A PERCENT BASIS (BY WEIGHT)

		POUNDS EMITTED PER UNIT PART	SOX	NOX	HC	CO	UNITS
INDUSTRIAL PROCES -MINERAL PRODUCTS							
LIME MFG CONTINUED							
3-05-016-09	CALCINING-ROTYKILN	200.					TONS PROCESSED
3-05-016-05	CALCINATIC KILN						TONS PROCESSED
3-05-016-06	FLUIDIZD BED KILN						TONS PROCESSED
3-05-016-09	HYDRATOR						TONS HYDRATED LIME PRODUCED
3-05-016-99	OTHER/NOT CLASIFD						TONS PROCESSED
MINERAL WOOL							
3-05-017-01	CUPOLA	22.0	0.02				TONS CHARGE
3-05-017-02	REVERB FNC	5.00					TONS CHARGE
3-05-017-03	BLOW CHAMBER	17.0					TONS CHARGE
3-05-017-04	CURING OVEN	4.00					TONS CHARGE
3-05-017-05	COOLER	3.00					TONS CHARGE
3-05-017-99	OTHER/NOT CLASIFD						TONS PROCESSED
PERLITE MFG							
3-05-018-01	VERTICAL FNC GEN	21.0					TONS CHARGE
3-05-018-99	OTHER/NOT CLASIFD						TONS PROCESSED
PHOSPHATE ROCK							
3-05-019-01	DRYING	18.0					TONS PHOSPHATE ROCK
3-05-019-02	GRINDING	20.0					TONS PHOSPHATE ROCK
3-05-019-03	TRANSFER/STORAGE	2.00					TONS PHOSPHATE ROCK
3-05-019-04	OPEN STORAGE	40.0					TONS PHOSPHATE ROCK
3-05-019-99	OTHER/NOT CLASIFD						TONS PROCESSED
STONE QUARY/PROC							
3-05-020-01	PRIMARY CRUSHING	0.50	0.	0.	0.	0.	TONS RAW MATERIAL
3-05-020-02	SEC CRUSH/SCREEN	1.50	0.	0.	0.	0.	TONS RAW MATERIAL
3-05-020-03	TERT CRUSH/SCREEN	6.00	0.	0.	0.	0.	TONS RAW MATERIAL
3-05-020-04	RECRUSH/SCREENING	5.00	0.	0.	0.	0.	TONS RAW MATERIAL
3-05-020-05	FINES MILL	6.00	0.	0.	0.	0.	TONS RAW MATERIAL
3-05-020-06	SCREEN/CONVYT/HNDL	2.00	0.	0.	0.	0.	TONS PRODUCT
3-05-020-07	OPEN STORAGE	10.0	0.	0.	0.	0.	TONS PRODUCT STORED
3-05-020-08	CUT STONE-GENERAL		0.	0.	0.	0.	TONS PROCESSED
3-05-020-09	BLASTING-GENERAL		0.	0.	0.	0.	TONS PROCESSED
3-05-020-99	OTHER/NOT CLASIFD						TONS PROCESSED
SALT MINING							
3-05-021-01	GENERAL		0.				TONS MINED
POTASH PRODUCTION							
3-05-022-01	MINE-GRIND/DRY		0.				TONS ORE
3-05-022-99	OTHER/NOT CLASIFD						TONS PROCESSED
CALCIUM BORATE							
3-05-023-01	MINING/PROCESSING				0.		TONS PRODUCT
3-05-023-99	OTHER/NOT CLASIFD						TONS PROCESSED
MG CARBONATE							
3-05-024-01	MINE/PROCESS				0.		TONS PRODUCT
3-05-024-99	OTHER/NOT CLASIFD						TONS PROCESSED
SAND/GRAVEL							
3-05-025-01	CRUSHING/SCREEN	0.10	0.	0.	0.	0.	TONS PRODUCT
3-05-025-99	OTHER/NOT CLASIFD						TONS PROCESSED
DIATOMACOUSERTH							
3-05-026-01	HANDLING		0.	0.	0.	0.	TONS PRODUCT
3-05-026-99	OTHER/NOT CLASIFD						TONS PROCESSED
CERAMIC ELECT PTS							
3-05-030-99	OTHER/NOT CLASIFD						TONS PROCESSED
ASBESTOS MINING							
3-05-031-01	SURFACE BLASTING		0.	0.	0.	0.	TONS OF ORE
3-05-031-02	SURFACE DRILLING		0.	0.	0.	0.	TONS OF ORE
3-05-031-03	COBBING		0.	0.	0.	0.	TONS OF ORE
3-05-031-04	LOADING		0.	0.	0.	0.	TONS OF ORE
3-05-031-05	CONVEY/HAUL ASBES		0.	0.	0.	0.	TONS OF ORE
3-05-031-06	CONVEY/HAUL WASTE		0.	0.	0.	0.	TONS OF ORE
3-05-031-07	UNLOADING		0.	0.	0.	0.	TONS OF ORE
3-05-031-08	STRIPPING		0.	0.	0.	0.	TONS REMOVED
3-05-031-09	VENTILATION		0.	0.	0.	0.	TONS OF ORE
3-05-031-10	STOCKPILING		0.	0.	0.	0.	TONS OF ORE
3-05-031-11	TAILINGS		0.	0.	0.	0.	TONS OF MATERIAL
3-05-031-99	OTHER/NOT CLASFD						TONS PROCESSED

'A' INDICATES THE ASH CONTENT, 'S' INDICATES THE SULFUR CONTENT OF THE FUEL ON A PERCENT BASIS (BY WEIGHT)

		POUNDS EMITTED PER UNIT PART	SOX	NOX	HC	CO	UNITS
INDUSTRIAL PROCES -MINERAL PRODUCTS							
ASBESTOS MILLING							
3-05-032-01	CRUSHING		0.	0.	0.	0.	TONS PROCESSED
3-05-032-02	DRYING		0.	0.	0.	0.	TONS PROCESSED
3-05-032-03	RECRUSHING		0.	0.	0.	0.	TONS PROCESSED
3-05-032-04	SCREENING		0.	0.	0.	0.	TONS PROCESSED
3-05-032-05	FIBERIZING		0.	0.	0.	0.	TONS PROCESSED
3-05-032-06	BAGGING		0.	0.	0.	0.	TONS PROCESSED
3-05-032-99	OTHER/NOT CLASFD						TONS PROCESSED
MINING-SPEC MATL							
3-05-040-01	OPEN PIT-BLASTING		0.	0.	0.	0.	TONS OF MATERIAL
3-05-040-02	OPEN PIT-DRILLING		0.	0.	0.	0.	TONS OF MATERIAL
3-05-040-03	OPEN PIT-COBBING		0.	0.	0.	0.	TONS OF MATERIAL
3-05-040-15	UNDERGRD-VENTILAT		0.	0.	0.	0.	TONS OF MATERIAL
3-05-040-20	LOADING		0.	0.	0.	0.	TONS OF MATERIAL
3-05-040-21	CONVEY/HAUL MATL		0.	0.	0.	0.	TONS OF MATERIAL
3-05-040-22	CONVEY/HAUL WASTE		0.	0.	0.	0.	TONS OF MATERIAL
3-05-040-23	UNLOADING		0.	0.	0.	0.	TONS OF MATERIAL
3-05-040-24	STRIPPING		0.	0.	0.	0.	TONS OF MATERIAL
3-05-040-25	STOCKPILE		0.	0.	0.	0.	TONS OF MATERIAL
3-05-040-30	PRIMARY CRUSHER		0.	0.	0.	0.	TONS OF MATERIAL
3-05-040-31	SECONDARY CRUSHER		0.	0.	0.	0.	TONS OF MATERIAL
3-05-040-32	ORE CONCENTRATOR		0.	0.	0.	0.	TONS OF MATERIAL
3-05-040-33	ORE DRYER		0.	0.	0.	0.	TONS OF MATERIAL
3-05-040-34	SCREENING		0.	0.	0.	0.	TONS OF MATERIAL
3-05-040-36	TAILING PILES		0.	0.	0.	0.	TONS OF MATERIAL
3-05-040-99	OTHER/NOT CLASIFD						TONS OF MATERIAL
OTHER/NOT CLASIFD							
3-05-999-99	SPECIFY IN REMARK						TONS PRODUCT
INDUSTRIAL PROCES -PETROLEUM INDRY							
PROCESS HEATER							
3-06-001-01	OIL	890.	6,720. S	2,900.	140.	0.	1000 BARRELS OIL BURNED
3-06-001-02	GAS	0.02	0.03 S	0.23	0.03	0.	1000 CUBIC FEET GAS BURNED
3-06-001-03	OIL	30.0	160. S	49.0	3.34	0.	1000 GALLONS OIL BURNED
3-06-001-04	GAS	20.0	830. S	230.	30.0	0.	MILLION CUBIC FEET BURNED
FLUID CRACKERS							
3-06-002-01	GENERAL (FCC)	242.	993.	71.0	220.	13,700.	1000 BARRELS FRESH FEED
MOV-BED CAT-CRACK							
3-06-003-01	GENERAL (TCC)	17.0	40.0	6.00	87.0	3,800.	1000 BARRELS FRESH FEED
BLOW-DOWN SYSTM							
3-06-004-01	W/CONTROLS	0.	0.	0.	6.00	0.	1000 BARRELS REFINERY CAPACITY
3-06-004-02	W/O CONTROLS	0.	0.	0.	300.	0.	1000 BARRELS REFINERY CAPACITY
PROCESS DRAINS							
3-06-005-01	GEN W/CONTROL	0.	0.	0.	8.00	0.	1000 BARRELS WASTE WATER
3-06-005-02	GEN W/O CONTROL	0.	0.	0.	210.	0.	1000 BARRELS WASTE WATER
VACUUM JETS							
3-06-006-01	W/CONTROL	0.	0.	0.	0.	0.	1000 BARRELS VACUUM DISTILLATION
3-06-006-02	W/O CONTROL	0.	0.	0.	130.	0.	1000 BARRELS VACUUM DISTILLATION
COOLING TOWERS							
3-06-007-01		0.	0.	0.	6.00	0.	MILLION GALLONS COOLING WATER
MISCELLANEOUS							
3-06-008-01	PIPE/VALVE-FLANGE	0.	0.	0.	28.0	0.	1000 BARRELS REFINERY CAPACITY
3-06-008-02	VESL RELIEF VALVE	0.	0.	0.	11.0	0.	1000 BARRELS REFINERY CAPACITY
3-06-008-03	PUMP SEALS	0.	0.	0.	17.0	0.	1000 BARRELS REFINERY CAPACITY
3-06-008-04	COMPRESR SEALS	0.	0.	0.	5.00	0.	1000 BARRELS REFINERY CAPACITY
3-06-008-05	OTHER-GENL	0.	0.	0.	10.0	0.	1000 BARRELS REFINERY CAPACITY
FLARES							
3-06-009-01	NATURAL GAS			0.			MILLIONS OF CUBIC FEET
3-06-009-99	OTHER/NOT CLASIFD						MILLIONS OF CUBIC FEET
SLUDGE CONVERTER							
3-06-010-01	GENERAL						TONS PROCESSED

'A' INDICATES THE ASH CONTENT, 'S' INDICATES THE SULFUR CONTENT OF THE FUEL ON A PERCENT BASIS (BY WEIGHT)

		POUNDS EMITTED PER UNIT PART	SOX	NOX	HC	CO	UNITS
INDUSTRIAL PROCES -PETROLEUM INDRY							
ASPHALT OXIDIZER							
3-06-011-01	GENERAL						TONS PROCESSED
3-06-011-99	OTHER/NOT CLASIFD						TONS PROCESSED
FLUID COKING							
3-06-012-01	GENERAL	523.					1000 BARRELS FRESH FEED
3-06-012-02	COOLING OPER						1000 BARRELS FRESH FEED
3-06-012-03	TRANSPORTATION						1000 BARRELS FRESH FEED
3-06-012-04	STORAGE						1000 BARRELS FRESH FEED
CATALYTIC REFORM							
3-06-013-01	GENERAL						1000 BARRELS FRESH FEED
OTHER/NOT CLASIFD							
3-06-999-98	SPECIFY IN REMARK						TONS PROCESSED
3-06-999-99	SPECIFY IN REMARK						BARRELS-PROCESSED
INDUSTRIAL PROCES -WOOD PRODUCTS							
SULFATE PULPING							
3-07-001-01	BLOWTHR ACCUMULTR	0.	0.			0.	AIR-DRY TONS UNBLEACHED PULP
3-07-001-02	WASHRS/SCREENS	0.	0.			0.	AIR-DRY TONS UNBLEACHED PULP
3-07-001-03	MULT-EFFECT EVAP	0.	0.			0.	AIR-DRY TONS UNBLEACHED PULP
3-07-001-04	RECVY BOLR/DCEVAP	181.	5.00			60.0	AIR-DRY TONS UNBLEACHED PULP
3-07-001-05	SMELT DISSOLV TNK	2.00	0.			0.	AIR-DRY TONS UNBLEACHED PULP
3-07-001-06	LIME KILNS	45.0	0.			18.0	AIR-DRY TONS UNBLEACHED PULP
3-07-001-07	TURPENTINE CONDSR	0.	0.			0.	AIR-DRY TONS UNBLEACHED PULP
3-07-001-08	FLUIDIZED CALCINER	72.0	0.			0.	AIR-DRY TONS UNBLEACHED PULP
3-07-001-09	LIQUOR OXIDN TOWR						AIR-DRY TONS UNBLEACHED PULP
3-07-001-99	OTHER/NOT CLASIFD						AIR-DRY TONS UNBLEACHED PULP
SULFITE PULPING							
3-07-002-01	LIQUOR RECOVERY						AIR-DRY TONS UNBLEACHED PULP
3-07-002-02	SULFITE TOWER						AIR-DRY TONS UNBLEACHED PULP
3-07-002-03	DIGESTER				0.		AIR-DRY TONS UNBLEACHED PULP
3-07-002-04	SMELT TANK				0.		AIR-DRY TONS UNBLEACHED PULP
3-07-002-05	EVAPORATORS				0.		AIR-DRY TONS UNBLEACHED PULP
3-07-002-06	PULP DIGESTER				0.		TONS AIR DRY PULP
3-07-002-99	OTHER/NOT CLASIFD						TONS AIR DRY PULP
PULPBOARD MFG							
3-07-004-01	PAPERBOARD-GEN	0.					TONS FINISHED PRODUCT
3-07-004-02	FIBERBOARD-GEN	0.60					TONS FINISHED PRODUCT
3-07-004-99	OTHER/NOT CLASIFD						TONS FINISHED PRODUCT
PRESSURE TREATING							
3-07-005-01	CREOSOTE						TONS OF WOOD TREATED
3-07-005-99	OTHER/NOT CLASIFD						TONS OF WOOD TREATED
TALLOIL/ROSIN							
3-07-006-01	GENERAL						TONS OF PRODUCT
PLYWOOD/PARTBOARD							
3-07-007-01	VENEER DRYER	0.	0.		1.20	0.	TONS PROCESSED
3-07-007-02	SANDING		0.	0.	0.	0.	TONS PROCESSED
3-07-007-99	OTHER/NOT CLASIFD						TONS PROCESSED
SAWMILL OPERATNS							
3-07-008-99	OTHER/NOT CLASIFD						TONS PROCESSED
EXCELSIOR MFG							
3-07-009-99	OTHER/NOT CLASIFD						TONS PROCESSED
CORK PROCESSING							
3-07-010-99	OTHER/NOT CLASIFD						TONS PROCESSED
FURNITURE MFG							
3-07-020-99	OTHER/NOT CLASIFD						TONS PROCESSED
OTHER/NOT CLASIFD							
3-07-999-99	SPECIFY IN REMARK						TONS PROCESSED

'A' INDICATES THE ASH CONTENT, 'S' INDICATES THE SULFUR CONTENT OF THE FUEL ON A PERCENT BASIS (BY WEIGHT)

		POUNDS EMITTED PER UNIT					
		PART	SOX	NOX	HC	CO	UNITS
INDUSTRIAL PROCES -METAL FABRICATION							
IRON/STEEL							
3-09-001-01	MISC HARDWARE		0.	0.		0.	TONS OF PRODUCT
3-09-001-02	FARM MACHINERY		0.	0.			TONS OF PRODUCT
3-09-001-99	OTHER/NOT CLASIFD						TONS PROCESSED
PLATING OPERATONS							
3-09-010-99	OTHER/NOT CLASIFD						TONS PLATED
CAN MAKING OPRNS							
3-09-020-99	OTHER/NOT CLASIFD						TONS PRODUCT
MACHINING OPER							
3-09-030-01	DRILLING-SP MATL		0.	0.	0.	0.	TONS PROCESSED
3-09-030-02	MILLING-SP MATL		0.	0.	0.	0.	TONS PROCESSED
3-09-030-03	REAMING-SP MATL		0.	0.	0.	0.	TONS PROCESSED
3-09-030-04	GRINDING-SP MATL		0.	0.	0.	0.	TONS PROCESSED
3-09-030-05	SAWING-SP MATL		0.	0.	0.	0.	TONS PROCESSED
3-09-030-06	HONING-SP MATL		0.	0.	0.	0.	TONS PROCESSED
3-09-030-99	OTHER-SP MATL						TONS PROCESSED
OTHER/NOT CLASIFD							
3-09-999-99	SPECIFY IN REMARK						TONS PROCESSED
INDUSTRIAL PROCES -LEATHER PRODUCTS							
OTHER/NOT CLASIFD							
3-20-999-99	SPECIFY IN REMARK						TONS PROCESSED
INDUSTRIAL PROCES -TEXTILE MFG							
GENERAL FABRICS							
3-30-001-01	YARN PREP/BLEACH						TONS PROCESSED
3-30-001-02	PRINTING						TONS PROCESSED
3-30-001-99	OTHER/NOT SPECIFD						TONS PROCESSED
RUBBERIZED FABRIC							
3-30-002-01	IMPREGNATION						TONS PROCESSED
3-30-002-02	WET COATING						TONS PROCESSED
3-30-002-03	HOT MELT COATING						TONS PROCESSED
3-30-002-99	OTHER/NOT SPECIFD						TONS PROCESSED
CARPET OPERATNS							
3-30-003-99	OTHER/NOT SPECIFD						TONS PROCESSED
INDUSTRIAL PROCES -INPROCESS FUEL							
ANTHRACITE COAL							
3-90-001-99	OTHER/NOT CLASIFD	0.	0.	0.	0.	0.	TONS BURNED
BITUMINOUS COAL							
3-90-002-01	CEMENT KILN/DRYER	0.	0.	0.	0.	0.	TONS BURNED
3-90-002-03	LIME KILN	0.	0.	0.	0.	0.	TONS BURNED
3-90-002-04	KAOLIN KILN	0.	0.	0.	0.	0.	TONS BURNED
3-90-002-06	BRICK KILN/DRY	0.	0.	0.	0.	0.	TONS BURNED
3-90-002-07	GYPSUM KILN/ETC	0.	0.	0.	0.	0.	TONS BURNED
3-90-002-08	COAL DRYERS	0.	0.	0.	0.	0.	TONS BURNED
3-90-002-09	ROCK/GRAVEL DRYER	0.	0.	0.	0.	0.	TONS BURNED
3-90-002-99	OTHER/NOT CLASIFD	0.	0.	0.	0.	0.	TONS BURNED
RESIDUAL OIL							
3-90-004-01	ASPHALT DRYER	0.	0.	0.	0.	0.	1000 GALLONS BURNED
3-90-004-02	CEMENT KILN/DRYER	0.	0.	0.	0.	0.	1000 GALLONS BURNED
3-90-004-03	LIME KILN	0.	0.	0.	0.	0.	1000 GALLONS BURNED
3-90-004-04	KAOLIN KILN	0.	0.	0.	0.	0.	1000 GALLONS BURNED
3-90-004-05	METAL MELTING	0.	0.	0.	0.	0.	1000 GALLONS BURNED
3-90-004-06	BRICK KILN/DRY	0.	0.	0.	0.	0.	1000 GALLONS BURNED
3-90-004-07	GYPSUM KILN/ETC	0.	0.	0.	0.	0.	1000 GALLONS BURNED
3-90-004-08	GLASS FURNACE	0.	0.	0.	0.	0.	1000 GALLONS BURNED
3-90-004-09	ROCK/GRAVEL DRYER	0.	0.	0.	0.	0.	1000 GALLONS BURNED
3-90-004-10	FRIT SMELTER	0.	0.	0.	0.	0.	1000 GALLONS BURNED
3-90-004-11	PERLITE FURNACE	0.	0.	0.	0.	0.	1000 GALLONS BURNED
3-90-004-30	FEED/GRAIN DRYING	0.	0.	0.	0.	0.	1000 GALLONS BURNED

'A' INDICATES THE ASH CONTENT, 'B' INDICATES THE SULFUR CONTENT OF THE FUEL ON A PERCENT BASIS (BY WEIGHT)

		POUNDS EMITTED PER UNIT PART	SOX	NOX	HC	CO	UNITS
INDUSTRIAL PROCES -INPROCESS FUEL							
RESIDUAL OIL	CONTINUED						
3-90-004-31	FOOD-DRY/COOK/ETC	0.	0.	0.	0.	0.	1000 GALLONS BURNED
3-90-004-32	FERTILIZER DRYING	0.	0.	0.	0.	0.	1000 GALLONS BURNED
3-90-004-50	PULPBOARD-DRYERS	0.	0.	0.	0.	0.	1000 GALLONS BURNED
3-90-004-51	PLYWOOD-DRYERS	0.	0.	0.	0.	0.	1000 GALLONS BURNED
3-90-004-52	PULP-RECOV BOILER	0.	0.	0.	0.	0.	1000 GALLONS BURNED
3-90-004-99	OTHER/NOT CLASIFD	0.	0.	0.	0.	0.	1000 GALLONS BURNED
DISTILLATE OIL							
3-90-005-01	ASPHALT DRYER	0.	0.	0.	0.	0.	1000 GALLONS BURNED
3-90-005-02	CEMENT KILN/DRYER	0.	0.	0.	0.	0.	1000 GALLONS BURNED
3-90-005-03	LIME KILN	0.	0.	0.	0.	0.	1000 GALLONS BURNED
3-90-005-04	KAOLIN KILN	0.	0.	0.	0.	0.	1000 GALLONS BURNED
3-90-005-05	METAL MELTING	0.	0.	0.	0.	0.	1000 GALLONS BURNED
3-90-005-06	BRICK KILN/DRY	0.	0.	0.	0.	0.	1000 GALLONS BURNED
3-90-005-07	GYPSUM KILN/ETC	0.	0.	0.	0.	0.	1000 GALLONS BURNED
3-90-005-08	GLASS FURNACE	0.	0.	0.	0.	0.	1000 GALLONS BURNED
3-90-005-09	ROCK/GRAVEL DRYER	0.	0.	0.	0.	0.	1000 GALLONS BURNED
3-90-005-10	FRIT SMELTER	0.	0.	0.	0.	0.	1000 GALLONS BURNED
3-90-005-11	PERLITE FURNACE	0.	0.	0.	0.	0.	1000 GALLONS BURNED
3-90-005-30	FEED/GRAIN DRYING	0.	0.	0.	0.	0.	1000 GALLONS BURNED
3-90-005-31	FOOD-DRY/COOK/ETC	0.	0.	0.	0.	0.	1000 GALLONS BURNED
3-90-005-32	FERTILIZER DRYING	0.	0.	0.	0.	0.	1000 GALLONS BURNED
3-90-005-50	PULPBOARD-DRYERS	0.	0.	0.	0.	0.	1000 GALLONS BURNED
3-90-005-51	PLYWOOD-DRYERS	0.	0.	0.	0.	0.	1000 GALLONS BURNED
3-90-005-52	PULP-RECOV BOILER	0.	0.	0.	0.	0.	1000 GALLONS BURNED
3-90-005-99	OTHER/NOT CLASIFD	0.	0.	0.	0.	0.	1000 GALLONS BURNED
NATURAL GAS							
3-90-006-01	ASPHALT DRYER	0.	0.	0.	0.	0.	MILLION CUBIC FEET BURNED
3-90-006-02	CEMENT KILN/DRYER	0.	0.	0.	0.	0.	MILLION CUBIC FEET BURNED
3-90-006-03	LIME KILN	0.	0.	0.	0.	0.	MILLION CUBIC FEET BURNED
3-90-006-04	KAOLIN KILN	0.	0.	0.	0.	0.	MILLION CUBIC FEET BURNED
3-90-006-05	METAL MELTING	0.	0.	0.	0.	0.	MILLION CUBIC FEET BURNED
3-90-006-06	BRICK KILN/DRYS	0.	0.	0.	0.	0.	MILLION CUBIC FEET BURNED
3-90-006-07	GYPSUM KILN ETC	0.	0.	0.	0.	0.	MILLION CUBIC FEET BURNED
3-90-006-08	GLASS FURNACE	0.	0.	0.	0.	0.	MILLION CUBIC FEET BURNED
3-90-006-09	ROCK/GRAVEL DRYER	0.	0.	0.	0.	0.	MILLION CUBIC FEET BURNED
3-90-006-10	FRIT SMELTER	0.	0.	0.	0.	0.	MILLION CUBIC FEET BURNED
3-90-006-11	PERLITE FURNACE	0.	0.	0.	0.	0.	MILLION CUBIC FEET BURNED
3-90-006-30	FEED/GRAIN DRYING	0.	0.	0.	0.	0.	MILLION CUBIC FEET BURNED
3-90-006-31	FOOD-DRY/COOK/ETC	0.	0.	0.	0.	0.	MILLION CUBIC FEET BURNED
3-90-006-32	FERTILIZER DRYING	0.	0.	0.	0.	0.	MILLION CUBIC FEET BURNED
3-90-006-50	PULPBOARD-DRYERS	0.	0.	0.	0.	0.	MILLION CUBIC FEET BURNED
3-90-006-51	PLYWOOD-DRYERS	0.	0.	0.	0.	0.	MILLION CUBIC FEET BURNED
3-90-006-52	PULP-RECOV BOILER	0.	0.	0.	0.	0.	MILLION CUBIC BEET BURNED
3-90-006-99	OTHER/NOT CLASIFD	0.	0.	0.	0.	0.	MILLION CUBIC FEET BURNED
PROCESS GAS							
3-90-007-01	CO/BLAST FURNACE	0.	0.	0.	0.	0.	MILLION CUBIC FEET BURNED
3-90-007-02	COKE OVEN GAS	0.	0.	0.	0.	0.	MILLION CUBIC FEET BURNED
3-90-007-99	OTHER/NOT CLASIFD	0.	0.	0.	0.	0.	MILLION CUBIC FEET BURNED
COKE							
3-90-008-01	MINERAL WOOL FURN	0.	0.	0.	0.	0.	TONS BURNED
3-90-008-99	OTHER/NOT CLASIFD	0.	0.	0.	0.	0.	TONS
WOOD							
3-90-009-99	OTHER/NOT CLASIFD	0.	0.	0.	0.	0.	TONS BURNED
LIQ PET GAS (LPG)							
3-90-010-99	OTHER/NOT CLASIFD	0.	0.	0.	0.	0.	1000 GALLONS BURNED
OTHER/NOT CLASIFD							
3-90-999-97	SPECIFY IN REMARK	0.	0.	0.	0.	0.	MILLION CUBIC FEET BURNED
3-90-999-98	SPECIFY IN REMARK	0.	0.	0.	0.	0.	1000 GALLONS BURNED
3-90-999-99	SPECIFY IN REMARK	0.	0.	0.	0.	0.	TONS BURNED
INDUSTRIAL PROCES -OTHER/NOT CLASIFD							
SPECIFY IN REMARK							
3-99-999-99							TONS PROCESSED

'A' INDICATES THE ASH CONTENT, 'S' INDICATES THE SULFUR CONTENT OF THE FUEL ON A PERCENT BASIS (BY WEIGHT)

		POUNDS EMITTED PER UNIT PART	SO2	NOX	HC	CO	UNITS
POINT SC EVAP	*CLEANING SOLVENT						
DRYCLEANING							
4-01-001-01	PERCHLORETHYLENE	0.	0.	0.	210.	0.	TONS CLOTHES CLEANED
4-01-001-02	STODDARD	0.	0.	0.	305.	0.	TONS CLOTHES CLEANED
4-01-001-99	SPECIFY SOLVENT						TONS CLOTHES CLEANED
DEGREASING							
4-01-002-01	STODDARD	0.	0.	0.		0.	TONS SOLVENT USED
4-01-002-02	TRICHLORETHANE						TONS SOLVENT USED
4-01-002-03	PERCHLORETHYLENE						TONS SOLVENT USED
4-01-002-04	METHYLENE CHLORDE						TONS SOLVENT USED
4-01-002-05	TRICHLORETHYLENE						TONS SOLVENT USED
4-01-002-06	TOLUENE						TONS SOLVENT USED
4-01-002-99	OTHER/NOT CLASIFD						TONS SOLVENT USED
OTHER/NOT CLASIFD							
4-01-999-99	SPECIFY IN REMARK						TONS SOLVENT USED
POINT SC EVAP	*SURFACE COATING						
PAINT							
4-02-001-01	GENERAL	0.	0.	0.	1,120.	0.	TONS COATING
4-02-001-02	ACETONE				2,000.		TONS SOLVENT IN COATING
4-02-001-03	ETHYL ACETATE				2,000.		TONS SOLVENT IN COATING
4-02-001-04	MEK				2,000.		TONS SOLVENT IN COATING
4-02-001-05	TOLUENE				2,000.		TONS SOLVENT IN COATING
4-02-001-99	SOLVENT GENERAL				2,000.		TONS SOLVENT IN COATING
VARNISH/SHELLAC							
4-02-003-01	GENERAL				1,000.		TONS COATING
4-02-003-02	ACETONE				2,000.		TONS SOLVENT IN COATING
4-02-003-03	ETHYL ACETATE				2,000.		TONS SOLVENT IN COATING
4-02-003-04	TOLUENE				2,000.		TONS SOLVENT IN COATING
4-02-003-05	XYLENE				2,000.		TONS SOLVENT IN COATING
4-02-003-99	SOLVENT GENERAL				2,000.		TONS SOLVENT IN COATING
LAQUER							
4-02-004-01	GENERAL				1,840.		TONS COATING
4-02-004-02	ACETONE				2,000.		TONS SOLVENT IN COATING
4-02-004-03	ETHYL ACETATE				2,000.		TONS SOLVENT IN COATING
4-02-004-04	ISOPROPYL ALCOHOL				2,000.		TONS SOLVENT IN COATING
4-02-004-05	MEK				2,000.		TONS SOLVENT IN COATING
4-02-004-06	TOLUENE				2,000.		TONS SOLVENT IN COATING
4-02-004-07	XYLENE				2,000.		TONS SOLVENT IN COATING
4-02-004-99	SOLVENT GENERAL				2,000.		TONS SOLVENT IN COATING
ENAMEL							
4-02-005-01	GENERAL	0.	0.	0.	840.	0.	TONS COATING
4-02-005-02	CELLOSOLVE ACETAT				2,000.		TONS SOLVENT IN COATING
4-02-005-03	MEK				2,000.		TONS SOLVENT IN COATING
4-02-005-04	TOLUENE				2,000.		TONS SOLVENT IN COATING
4-02-005-05	XYLENE				2,000.		TONS SOLVENT IN COATING
4-02-005-99	SOLVENT GENERAL				2,000.		TONS SOLVENT IN COATING
PRIMER							
4-02-006-01	GENERAL				1,320.		TONS COATING
4-02-006-02	NAPHTHA				2,000.		TONS SOLVENT IN COATING
4-02-006-03	XYLENE				2,000.		TONS SOLVENT IN COATING
4-02-006-04	MINERAL SPIRITS				2,000.		TONS SOLVENT IN COATING
4-02-006-05	TOLUENE				2,000.		TONS SOLVENT IN COATING
4-02-006-99	SOLVENT GENERAL				2,000.		TONS SOLVENT IN COATING
ADHESIVE							
4-02-007-01	GENERAL						TONS COATING
4-02-007-02	MEK				2,000.		TONS SOLVENT IN COATING
4-02-007-03	TOLUENE				2,000.		TONS SOLVENT IN COATING
4-02-007-04	BENZENE				2,000.		TONS SOLVENT IN COATING
4-02-007-05	NAPHTHA				2,000.		TONS SOLVENT IN COATING
4-02-007-99	SOLVENT GENERAL				2,000.		TONS SOLVENT IN COATING
COATING OVEN							
4-02-008-01	GENERAL						TONS COATING
4-02-008-02	DRIED < 175F						TONS COATING
4-02-008-03	BAKED > 175F						TONS COATING
4-02-008-99	OTHER/SPECIFY						TONS COATING

'A' INDICATES THE ASH CONTENT, 'S' INDICATES THE SULFUR CONTENT OF THE FUEL ON A PERCENT BASIS (BY WEIGHT)

		POUNDS EMITTED PER UNIT PART	SOX	NOX	HC	CO	UNITS
POINT SC EVAP	*SURFACE COATING						
SOLVENT							
4-02-009-01	GENERAL				2,000.		TONS SOLVENT
4-02-009-02	ACETONE				2,000.		TONS SOLVENT
4-02-009-03	BUTYL ACETATE				2,000.		TONS SOLVENT
4-02-009-04	BUTYL ALCOHOL				2,000.		TONS SOLVENT
4-02-009-05	CARBITOL				2,000.		TONS SOLVENT
4-02-009-06	CELLOSOLVE				2,000.		TONS SOLVENT
4-02-009-07	CELLOSOLVE ACETAT				2,000.		TONS SOLVENT
4-02-009-08	DIMETHYLFORMAMIDE				2,000.		TONS SOLVENT
4-02-009-09	ETHYL ACETATE				2,000.		TONS SOLVENT
4-02-009-10	ETHYL ALCOHOL				2,000.		TONS SOLVENT
4-02-009-11	GASOLINE				2,000.		TONS SOLVENT
4-02-009-12	ISOPROPYL ALCOHOL				2,000.		TONS SOLVENT
4-02-009-13	ISOPROPYL ACETATE				2,000.		TONS SOLVENT
4-02-009-14	KEROSENE				2,000.		TONS SOLVENT
4-02-009-15	LACTOL SPIRITS				2,000.		TONS SOLVENT
4-02-009-16	METHYL ACETATE				2,000.		TONS SOLVENT
4-02-009-17	METHYL ALCOHOL				2,000.		TONS SOLVENT
4-02-009-18	MEK				2,000.		TONS SOLVENT
4-02-009-19	MIBK				2,000.		TONS SOLVENT
4-02-009-20	MINERAL SPIRITS				2,000.		TONS SOLVENT
4-02-009-21	NAPHTHA				2,000.		TONS SOLVENT
4-02-009-22	TOLUENE				2,000.		TONS SOLVENT
4-02-009-23	VARSOL				2,000.		TONS SOLVENT
4-02-009-24	XYLENE				2,000.		TONS SOLVENT
OTHER/NOT CLASIFD							
4-02-999-99	SPECIFY IN REMARK						TONS COATING
POINT SC EVAP	*PETROL PROD STG						
FIXED ROOF							
4-03-001-01	BREATH-GASOLINE	0.	0.	0.	80.3	0.	1000 GALLONS STORAGE CAPACITY
4-03-001-02	BREATH-CRUDE	0.	0.	0.	84.8	0.	1000 GALLONS STORAGE CAPACITY
4-03-001-03	WORKING-GASOLINE	0.	0.	0.	9.00	0.	1000 GALLONS THROUGHPUT
4-03-001-04	WORKING-CRUDE	0.	0.	0.	7.30	0.	1000 GALLONS THROUGHPUT
4-03-001-05	BREATH-JET FUEL	0.	0.	0.	25.2	0.	1000 GALLONS STORAGE CAPACITY
4-03-001-06	BREATH-KEROSENE	0.	0.	0.	13.1	0.	1000 GALLONS STORAGE CAPACITY
4-03-001-07	BREATH-DIST FUEL	0.	0.	0.	13.1	0.	1000 GALLONS STORAGE CAPACITY
4-03-001-08	BREATH-BENZENE	0.	0.	0.	16.3	0.	1000 GALLONS STORAGE CAPACITY
4-03-001-09	BREATH-CYCLOHEX	0.	0.	0.	20.8	0.	1000 GALLONS STORAGE CAPACITY
4-03-001-10	BREATH-CYCLOPENT	0.	0.	0.	58.4	0.	1000 GALLONS STORAGE CAPACITY
4-03-001-11	BREATH-HEPTANE	0.	0.	0.	11.3	0.	1000 GALLONS STORAGE CAPACITY
4-03-001-12	BREATH-HEXANE	0.	0.	0.	32.1	0.	1000 GALLONS STORAGE CAPACITY
4-03-001-13	BREATH-ISOOCTANE	0.	0.	0.	13.9	0.	1000 GALLONS STORAGE CAPACITY
4-03-001-14	BREATH-ISOPENTANE	0.	0.	0.	142.	0.	1000 GALLONS STORAGE CAPACITY
4-03-001-15	BREATH-PENTANE	0.	0.	0.	94.9	0.	1000 GALLONS STORAGE CAPACITY
4-03-001-16	BREATH-TOLUENE	0.	0.	0.	5.84	0.	1000 GALLONS STORAGE CAPACITY
4-03-001-50	WORKING-JET FUEL	0.	0.	0.	2.40	0.	1000 GALLONS THROUGHPUT
4-03-001-51	WORKING-KEROSENE	0.	0.	0.	1.00	0.	1000 GALLONS THROUGHPUT
4-03-001-52	WORKING-DIST FUEL	0.	0.	0.	1.00	0.	1000 GALLONS THROUGHPUT
4-03-001-53	WORKING-BENZENE	0.	0.	0.	2.00	0.	1000 GALLONS THROUGHPUT
4-03-001-54	WORKING-CYCLOHEX	0.	0.	0.	2.30	0.	1000 GALLONS THROUGHPUT
4-03-001-55	WORKING-CYCLOPENT	0.	0.	0.	6.40	0.	1000 GALLONS THROUGHPUT
4-03-001-56	WORKING-HEPTANE	0.	0.	0.	1.20	0.	1000 GALLONS THROUGHPUT
4-03-001-57	WORKING-HEXANE	0.	0.	0.	3.60	0.	1000 GALLONS THROUGHPUT
4-03-001-58	WORKING-ISOOCTANE	0.	0.	0.	1.50	0.	1000 GALLONS THROUGHPUT
4-03-001-59	WORKING-ISOPENT	0.	0.	0.	15.7	0.	1000 GALLONS THROUGHPUT
4-03-001-60	WORKING-PENTANE	0.	0.	0.	10.6	0.	1000 GALLONS THROUGHPUT
4-03-001-61	WORKING-TOLUENE	0.	0.	0.	0.64	0.	1000 GALLONS THROUGHPUT
4-03-001-98	BREATHE-SPECIFY						1000 GALLONS STORAGE CAPACITY
4-03-001-99	WORKING-SPECIFY						1000 GALLONS THRUPUT
FLOATING ROOF							
4-03-002-01	STAND STG-GASOLN	0.	0.	0.	12.1	0.	1000 GALLONS STORAGE CAPACITY
4-03-002-02	WORKING-PRODUCT				0.		1000 GALLONS THROUGHPUT
4-03-002-03	STAND STG-CRUDE	0.	0.	0.	10.6	0.	1000 GALLONS STORAGE CAPACITY
4-03-002-04	WORKING-CRUDE				0.		1000 GALLONS THROUGHPUT
4-03-002-05	STAND STG-JETFUEL	0.	0.	0.	9.38	0.	1000 GALLONS STORAGE CAPACITY
4-03-002-06	STAND STG-KEROSENE	0.	0.	0.	1.90	0.	1000 GALLONS STORAGE CAPACITY
4-03-002-07	STAND STG-DIST FL	0.	0.	0.	1.90	0.	1000 GALLONS STORAGE CAPACITY
4-03-002-08	STAND STG-BENZENE	0.	0.	0.	2.70	0.	1000 GALLONS STORAGE CAPACITY
4-03-002-09	STAND STG-CYCLHEX	0.	0.	0.	3.03	0.	1000 GALLONS STORAGE CAPACITY
4-03-002-10	STAND STG-CYCLPEN	0.	0.	0.	8.74	0.	1000 GALLONS STORAGE CAPACITY
4-03-002-11	STAND STG-HEPTANE	0.	0.	0.	1.64	0.	1000 GALLONS STORAGE CAPACITY
4-03-002-12	STAND STG-HEXANE	0.	0.	0.	4.75	0.	1000 GALLONS STORAGE CAPACITY
4-03-002-13	STAND STG-ISOOCTN	0.	0.	0.	2.01	0.	1000 GALLONS STORAGE CAPACITY
4-03-002-14	STAND STG-ISOPENT	0.	0.	0.	20.8	0.	1000 GALLONS STORAGE CAPACITY
4-03-002-15	STAND STG-PENTANE	0.	0.	0.	13.9	0.	1000 GALLONS STORAGE CAPACITY
4-03-002-16	STAND STG-TOLUENE	0.	0.	0.	0.86	0.	1000 GALLONS STORAGE CAPACITY
4-03-002-99	STAND-STG-SPECIFY						1000 GALLONS STORAGE CAPACITY

'4' INDICATES THE ASH CONTENT, '9' INDICATES THE SULFUR CONTENT OF THE FUEL ON A PERCENT BASIS (BY WEIGHT)

		POUNDS EMITTED PER UNIT PART	SOX	NOX	HC	CO	UNITS
POINT SC EVAP	-PETROL PROD STG						
VAR-VAPOR SPACE							
4-03-003-02	WORKING-GASOLINE	0.	0.	0.	10.2	0.	1000 GALLONS THROUGHPUT
4-03-003-03	WORKING-JET FUEL	0.	0.	0.	2.30	0.	1000 GALLONS THROUGHPUT
4-03-003-04	WORKING-KEROSENE	0.	0.	0.	1.00	0.	1000 GALLONS THROUGHPUT
4-03-003-05	WORKING-DIST FUEL	0.	0.	0.	1.00	0.	1000 GALLONS THROUGHPUT
4-03-003-06	WORKING-BENZENE	0.	0.	0.	2.30	0.	1000 GALLONS THROUGHPUT
4-03-003-07	WORKING-CYCLOHEX	0.	0.	0.	2.40	0.	1000 GALLONS THROUGHPUT
4-03-003-08	WORKING-CYCLOPENT	0.	0.	0.	7.20	0.	1000 GALLONS THROUGHPUT
4-03-003-09	WORKING-HEPTANE	0.	0.	0.	1.40	0.	1000 GALLONS THROUGHPUT
4-03-003-10	WORKING-HEXANE	0.	0.	0.	4.00	0.	1000 GALLONS THROUGHPUT
4-03-003-11	WORKING-ISOOCTANE	0.	0.	0.	1.70	0.	1000 GALLONS THROUGHPUT
4-03-003-12	WORKING-ISOPENT	0.	0.	0.	17.8	0.	1000 GALLONS THROUGHPUT
4-03-003-13	WORKING-PENTANE	0.	0.	0.	12.0	0.	1000 GALLONS THROUGHPUT
4-03-003-14	WORKING-TOLUENE	0.	0.	0.	0.73	0.	1000 GALLONS THROUGHPUT
4-03-003-99	WORKING-SPECIFY						1000 GALLONS THRUPUT
OTHER/NOT CLASIFD							
4-03-999-99	SPECIFY IN REMARK						1000 GAL STORED
POINT SC EVAP	-MISC ORGANIC STOR						
OTHER/NOT CLASIFD							
4-04-001-99	SPECIFY IN REMARK						TONS STORED
POINT SC EVAP	-PRINTING PRESS						
DRYERS							
4-05-001-01	GENERAL			0.			TONS SOLVENT
LETTERPRESS							
4-05-002-01	GENERAL				700.		TONS INK
4-05-002-02	KEROSENE				2,000.		TONS SOLVENT IN INK
4-05-002-03	MINERAL SPIRITS				2,000.		TONS SOLVENT IN INK
4-05-002-99	SOLVENT GENERAL				2,000.		TONS SOLVENT IN INK
FLEXOGRAPHIC							
4-05-003-01	GENERAL				1,300.		TONS INK
4-05-003-02	CARBITOL				2,000.		TONS SOLVENT IN INK
4-05-003-03	CELLOSOLVE				2,000.		TONS SOLVENT IN INK
4-05-003-04	ETHYL ALCOHOL				2,000.		TONS SOLVENT IN INK
4-05-003-05	ISOPROPYL ALCOHOL				2,000.		TONS SOLVENT IN INK
4-05-003-06	N-PROPYL ALCOHOL				2,000.		TONS SOLVENT IN INK
4-05-003-07	NAPHTHA				2,000.		TONS SOLVENT IN INK
4-05-003-99	SOLVENT GENERAL				2,000.		TONS SOLVENT IN INK
LITHOGRAPHIC							
4-05-004-01	GENERAL				700.		TONS INK
4-05-004-02	MINERAL SPIRITS				2,000.		TONS SOLVENT IN INK
4-05-004-03	ISOPROPYL ALCOHOL				2,000.		TONS SOLVENT IN INK
4-05-004-99	SOLVENT GENERAL				2,000.		TONS SOLVENT IN INK
GRAVURE							
4-05-005-01	GENERAL				1,300.		TONS INK
4-05-005-02	DIMETHYLFORMAMIDE				2,000.		TONS SOLVENT IN INK
4-05-005-03	ETHYL ACETATE				2,000.		TONS SOLVENT IN INK
4-05-005-04	ETHYL ALCOHOL				2,000.		TONS SOLVENT IN INK
4-05-005-05	ISOPROPYL ALCOHOL				2,000.		TONS SOLVENT IN INK
4-05-005-06	HEX				2,000.		TONS SOLVENT IN INK
4-05-005-07	MIBK				2,000.		TONS SOLVENT IN INK
4-05-005-08	MINERAL SPIRITS				2,000.		TONS SOLVENT IN INK
4-05-005-09	N-PROPYL ALCOHOL				2,000.		TONS SOLVENT IN INK
4-05-005-10	TOLUENE				2,000.		TONS SOLVENT IN INK
4-05-005-99	SOLVENT GENERAL				2,000.		TONS SOLVENT IN INK

'A' INDICATES THE ASH CONTENT, 'S' INDICATES THE SULFUR CONTENT OF THE FUEL ON A PERCENT BASIS (BY WEIGHT)

		POUNDS EMITTED PER UNIT PART	SOX	NOX	HC	CO	UNITS
POINT SC EVAP **********	=PETROL MRKT-TRANS **********						
TANK CARS/TRUCKS							
4-06-001-01	LOAD(SPLASH)-GASO	0.	0.	0.	12.4	0.	1000 GALLONS TRANSFERRED
4-06-001-02	LOAD(SPLASH)-CRUD	0.	0.	0.	10.6	0.	1000 GALLONS TRANSFERRED
4-06-001-03	LOAD(SPLASH)-JET	0.	0.	0.	1.84	0.	1000 GALLONS TRANSFERRED
4-06-001-04	LOAD(SPLASH)-KERO	0.	0.	0.	0.86	0.	1000 GALLONS TRANSFERRED
4-06-001-05	LOAD(SPLASH)-DIST	0.	0.	0.	0.93	0.	1000 GALLONS TRANSFERRED
4-06-001-26	LOAD(SUBM)-GASOLN	0.	0.	0.	4.10	0.	1000 GALLONS TRANSFERRED
4-06-001-27	LOAD(SUBM)-CRUDE	0.	0.	0.	3.80	0.	1000 GALLONS TRANSFERRED
4-06-001-28	LOAD(SUBM)-JET FL	0.	0.	0.	0.91	0.	1000 GALLONS TRANSFERRED
4-06-001-29	LOAD(SUBM)-KEROSN	0.	0.	0.	0.45	0.	1000 GALLONS TRANSFERRED
4-06-001-30	LOAD(SUBM)-DIST	0.	0.	0.	0.48	0.	1000 GALLONS TRANSFERRED
4-06-001-51	UNLOAD-GASOLINE	0.	0.	0.	2.10	0.	1000 GALLONS TRANSFERRED
4-06-001-52	UNLOAD-CRUDE OIL	0.	0.	0.	1.98	0.	1000 GALLONS TRANSFERRED
4-06-001-53	UNLOAD-JET FUEL	0.	0.	0.	0.45	0.	1000 GALLONS TRANSFERRED
4-06-001-54	UNLOAD-KEROSENE	0.	0.	0.	0.23	0.	1000 GALLONS TRANSFERRED
4-06-001-55	UNLOAD-DIST OIL	0.	0.	0.	0.24	0.	1000 GALLONS TRANSFERRED
4-06-001-97	LOAD(SPLSH)SPECIFY						1000 GALLONS TRANSFERRED
4-06-001-98	LOAD(SUBM)SPECIFY						1000 GALLONS TRANSFERRED
4-06-001-99	UNLOAD-SPECIFY						1000 GALLONS TRANSFERRED
MARINE VESSELS							
4-06-002-01	LOADING-GASOLINE	0.	0.	0.	2.86	0.	1000 GALLONS TRANSFERRED
4-06-002-02	LOADING-CRUDE OIL	0.	0.	0.	2.58	0.	1000 GALLONS TRANSFERRED
4-06-002-03	LOADING-JET FUEL	0.	0.	0.	0.60	0.	1000 GALLONS TRANSFERRED
4-06-002-04	LOADING-KEROSENE	0.	0.	0.	0.27	0.	1000 GALLONS TRANSFERRED
4-06-002-05	LOADING-DIST OIL	0.	0.	0.	0.29	0.	1000 GALLONS TRANSFERRED
4-06-002-26	UNLOAD-GASOLINE	0.	0.	0.	2.52	0.	1000 GALLONS TRANSFERRED
4-06-002-27	UNLOAD-CRUDE OIL	0.	0.	0.	2.25	0.	1000 GALLONS TRANSFERRED
4-06-002-28	UNLOAD-JET FUEL	0.	0.	0.	0.52	0.	1000 GALLONS TRANSFERRED
4-06-002-29	UNLOAD-KEROSENE	0.	0.	0.	0.24	0.	1000 GALLONS TRANSFERRED
4-06-002-30	UNLOAD-DIST OIL	0.	0.	0.	0.25	0.	1000 GALLONS TRANSFERRED
4-06-002-98	LOADING-SPECIFY						1000 GALLONS TRANSFERRED
4-06-002-99	UNLOAD-SPECIFY						1000 GALLONS TRANSFERRED
UNDERGRD GASO STG							
4-06-003-01	SPLASH LOADING	0.	0.	0.	11.5	0.	1000 GALLONS TRANSFERRED
4-06-003-02	SUB LOAD-UNCONT	0.	0.	0.	7.30	0.	1000 GALLONS TRANSFERRED
4-06-003-03	SUB LOAD-OPN SYS	0.	0.	0.	0.80	0.	1000 GALLONS TRANSFERRED
4-06-003-04	SUB LOAD-CLS SYS	0.	0.	0.	0.	0.	1000 GALLONS TRANSFERRED
4-06-003-05	UNLOADING	0.	0.	0.	1.00	0.	1000 GALLONS TRANSFERRED
4-06-003-99	SPECIFY METHOD						1000 GALLONS TRANSFERRED
FILL VEH GAS TANK							
4-06-004-01	VAP DISP LOSS	0.	0.	0.	11.0	0.	1000 GALLONS PUMPED
4-06-004-02	LIQ SPILL LOSS	0.	0.	0.	0.67	0.	1000 GALLONS PUMPED
4-06-004-99	OTHER LOSS						1000 GALLONS PUMPED
POINT SC EVAP **********	=MISC HC EVAP **********						
OTHER/NOT CLASIFD							
4-90-999-99	SPECIFY IN REMARK						TONS PROCESSED
SOLID WASTE **********	=GOVERNMENT **********						
MUNICIPAL INCIN							
5-01-001-01	MULTIPLE CHAMBER	30.0	2.50	2.00	1.50	35.0	TONS BURNED
5-01-001-02	SINGLE CHAMBER	15.0	2.50	2.00	15.0	20.0	TONS BURNED
OPEN BURNING DUMP							
5-01-002-01	GENERAL	16.0	1.00	6.00	30.0	85.0	TONS BURNED
5-01-002-02	LANDSCAPE/PRUNING	17.0		2.00	20.0	60.0	TONS BURNED
5-01-002-03	JET FUEL						HUNDREDS OF GALLONS
INCINERATOR							
5-01-005-05	PATHOLOGICAL	8.00	0.	3.00	0.	0.	TONS BURNED
5-01-005-06	SLUDGE	100.	1.00	5.00	1.00	0.	TONS DRY SLUDGE
5-01-005-07	CONICAL	20.0	2.00	5.00	20.0	60.0	TONS BURNED
5-01-005-99	OTHER/NOT CLASIFD						TONS BURNED
AUX.FUEL/NO EMSNS							
5-01-900-04	RESIDUAL OIL	0.	0.	0.	0.	0.	1000 GALLONS
5-01-900-05	DISTILLATE OIL	0.	0.	0.	0.	0.	1000 GALLONS
5-01-900-06	NATURAL GAS	0.	0.	0.	0.	0.	MILLION CUBIC FEET
5-01-900-10	LPG	0.	0.	0.	0.	0.	1000 GALLONS
5-01-900-97	OTHER/NOT CLASIFD	0.	0.	0.	0.	0.	MILLION CUBIC FEET
5-01-900-98	OTHER/NOT CLASIFD	0.	0.	0.	0.	0.	1000 GALLONS
5-01-900-99	OTHER/NOT CLASIFD	0.	0.	0.	0.	0.	TONS

'A' INDICATES THE ASH CONTENT, 'S' INDICATES THE SULFUR CONTENT OF THE FUEL ON A PERCENT BASIS (BY WEIGHT)

		POUNDS EMITTED PER UNIT PART	SOX	NOX	HC	CO	UNITS
SOLID WASTE	-COMM-INST						
INCINERATOR GEN							
5-03-001-01	MULTIPLE CHAMBER	7.00	2.50	3.00	3.00	10.0	TONS BURNED
5-03-001-02	SINGLE CHAMBER	15.0	2.50	2.00	15.0	20.0	TONS BURNED
5-03-001-03	CONTROLLED AIR	1.40	1.50	10.0	0.	0.	TONS BURNED
5-03-001-04	CONICAL-REFUSE	20.0	2.00	5.00	20.0	60.0	TONS BURNED
5-03-001-05	CONICAL-WOOD	7.00	0.10	1.00	11.0	130.	TONS BURNED
OPEN BURNING							
5-03-002-01	WOOD	17.0		2.00	4.00	50.0	TONS BURNED
5-03-002-02	REFUSE						TONS BURNED
APARTMENT INCIN							
5-03-003-01	FLUE FED	30.0	0.50	3.00	15.0	20.0	TONS BURNED
5-03-003-02	FLUE FED-MODIFIED	6.00	0.50	10.0	3.00	10.0	TONS BURNED
INCINERATOR							
5-03-005-05	PATHOLOGICAL	0.00	0.	3.00	0.	0.	TONS BURNED
5-03-005-06	SLUDGE	100.	1.00	6.00	1.00	0.	TONS DRY SLUDGE
5-03-005-99	OTHER/NOT CLASIFD						TONS BURNED
AUX.FUEL/NG EMSNS							
5-03-900-04	RESIDUAL OIL	0.	0.	0.	0.	0.	1000 GALLONS
5-03-900-05	DISTILLATE OIL	0.	0.	0.	0.	0.	1000 GALLONS
5-03-900-06	NATURAL GAS	0.	0.	0.	0.	0.	MILLION CUBIC FEET
5-03-900-10	LPG	0.	0.	0.	0.	0.	1000 GALLONS
5-03-900-97	OTHER/NOT CLASIFD	0.	0.	0.	0.	0.	MILLION CUBIC FEET
5-03-900-98	OTHER/NOT CLASIFD	0.	0.	0.	0.	0.	1000 GALLONS
5-03-900-99	OTHER/NOT CLASIFD	0.	0.	0.	0.	0.	TONS
SOLID WASTE	-INDUSTRIAL						
INCINERATOR							
5-03-001-01	MULTIPLE CHAMBER	7.00	2.50	3.00	3.00	10.0	TONS BURNED
5-03-001-02	SINGLE CHAMBER	15.0	2.50	2.00	15.0	20.0	TONS BURNED
5-03-001-03	CONTROLLED AIR	1.40	1.50	10.0	0.	0.	TONS BURNED
5-03-001-04	CONICAL REFUSE	20.0	2.00	5.00	20.0	60.0	TONS BURNED
5-03-001-05	CONICAL WOOD	7.00	0.10	1.00	11.0	130.	TONS BURNED
5-03-001-06	OPEN PIT	15.0	0.10	4.00	0.	0.	TONS OF WASTE
OPEN BURNING							
5-03-002-01	WOOD	17.0	0.	2.00	4.00	50.0	TONS BURNED
5-03-002-02	REFUSE	14.0	1.00	6.00	30.0	85.0	TONS BURNED
5-03-002-03	AUTO BODY COMPTS	100.	0.	4.00	30.0	125.	TONS BURNED
5-03-002-04	COAL REFUSE PILES	0.90	1.10	0.10	0.50	2.50	CUBIC YARDS OF PILE
AUTO BODY INCINAT							
5-03-003-01	W/O AFTERBURNER	2.00		0.10	0.50	2.50	AUTOS BURNED
5-03-003-02	W/ AFTERBURNER	1.50		0.02	0.	0.	AUTOS BURNED
RAIL CAR BURNING							
5-03-004-01	OPEN						CARS BURNED
INCINERATOR							
5-03-005-06	SLUDGE	100.	1.00	6.00	1.00	0.	TONS DRY SLUDGE
5-03-005-99	OTHER/NOT CLASIFD						TONS BURNED
AUX.FUEL/NG EMSNS							
5-03-900-04	RESIDUAL OIL	0.	0.	0.	0.	0.	1000 GALLONS
5-03-900-05	DISTILLATE OIL	0.	0.	0.	0.	0.	1000 GALLONS
5-03-900-06	NATURAL GAS	0.	0.	0.	0.	0.	MILLION CUBIC FEET
5-03-900-07	PROCESS GAS	0.	0.	0.	0.	0.	MILLION CUBIC FEET
5-03-900-10	L P G	0.	0.	0.	0.	0.	1000 GALLONS
5-03-900-97	OTHER/NOT CLASIFD	0.	0.	0.	0.	0.	MILLION CUBIC FEET
5-03-900-98	OTHER/NOT CLASIFD	0.	0.	0.	0.	0.	1000 GALLONS
5-03-900-99	OTHER/NOT CLASIFD	0.	0.	0.	0.	0.	TONS
MISCELLANEOUS	-FEDRL NONEMITTERS						
OTHER/NOT CLASIFD							
6-01-999-98	SPECIFY IN REMARK						INSTALLATIONS (EACH)
6-01-999-99	SPECIFY IN REMARK						AREA/ACRES

'A' INDICATES THE ASH CONTENT, 'B' INDICATES THE SULFUR CONTENT OF THE FUEL ON A PERCENT BASIS (BY WEIGHT)

APPENDIX I-E

AREA SOURCE CLASSIFICATION CODES

Area sources of hydrocarbons include industrial area sources, residential and commercial sources, highway vehicles both as area and line sources, railroads, river vessels, airports and off-highway mobile sources.

Table I-E is an expansion of the NEDS Area Source to EIS/P&R User-Point-ID 13 major categories reported in Section 5 of the "Comprehensive Data Handling System, Emissions Inventory/Permits and Registration Subsystem (EIS/P&R) Program Documentation and Users Guide" (EPA-450/3-74-045a, February 1975).

The Area SCC categories that appear after 91308500 have been provided by the California Air Resources Board for specific profiles included in this manual. Table I-E is necessarily incomplete because of the limited number of area source categories identified to date.

Category	EIS/P&R (USER-POINT-ID)	Fuel/Pollutant Source	(AREA) SCC
Residential Fuel	901	Anthracite Coal	90100111
		Bituminous Coal	90100222
		Distillate Oil	90100330
		Residual Oil	90100440
		Natural Gas	90100500
		Wood	90100600
Commercial and Institutional Fuel	902	Anthracite Coal	90200111
		Bituminous Coal	90200222
		Distillate Oil	90200330
		Residual Oil	90200440
		Natural Gas	90200500
		Wood	90200600
Industrial Fuel	903	Anthracite Coal	90300111
		Bituminous Coal	90300222
		Coke	90300700
		Distillate Oil	90300330
		Residual Oil	90300440
		Natural Gas	90300500
		Wood	90300600
		Process Gas	90300800
On-Site Incineration	904	Residential	90401100
		Industrial	90401200
		Commercial/Institutional	90401300
Open Burning	905	Residential	90501100
		Industrial	90501200
		Commercial/Institutional	90501300
Gasoline Fuel	906	Light Vehicle	90602100
		Heavy Vehicle	90602200
		Off Hiway	90602300
Diesel Fuel	907	Heavy Vehicle	90702200
		Off Hiway	90702300
		Rail Locomotive	90702400

AREA SOURCE CATEGORIES

AREA SOURCE CATEGORIES

Category	EIS/P&R (USER-POINT-ID)	Fuel/Pollutant Source	(AREA) SCC
Aircraft	908	Military	90803100
		Civil	90803200
		Commercial	90803300
Vessels	909	Anthracite Coal	90900111
		Diesel Oil	90904230
		Residual Oil	90900440
		Gasoline	90904430
Evaporation	910	Solvent Purchased	91005100
		Gasoline Marketed	91005200
Measured Vehicle Miles	911	Limited Access Roads	91106100
		Rural Roads	91106200
		Suburban Roads	91106300
		Urban Roads	91106400
Miscellaneous Dust	912	Dirt Roads Traveled	91207100
		Dirt Air Strips	91207200
		Construction Land Area	91207300
		Rock Handling & Storing	91207400
Miscellaneous Burning	913	Forest Fires	91308100
		Slash Burning	91308200
		Frost Control	91308300
		Structure Fires	91308400
		Coal Refuse Burning	91308500

Category	EIS/P&R (User-Point-ID)	Fuel/Pollutant Source	(Area)SCC
Solvent Use	-	Architectural Surface Coatings	93510300
	-	Domestic Solvents, General	93570200
	-	Pesticides, Domestic & Commercial	93570598
Geogenic	-	Forests	94740999
	-	Petroleum Seeps	94741101
	-	Citrus Groves	94742999
Solid Waste	-	Animal Waste	94999998
	-	Landfill Site, Class II	94999999

APPENDIX I-F

BOILING POINT RANGE COMPOUNDS

INDUSTRIAL NAPTHAS (Ref. 1)

Refiners manufacture a large number of liquid hydrocarbon compounds in a narrow range of boiling points with a high degree of purity from natural gas and petroleum. The petroleum oils that result from this distillation process as a group are known as industrial napthas. The term "industrial napthas" includes solvents, thinners (for example, of the type used in the paints and varnish industries), and diluents (as used in the manufacture of pharmaceuticals and insecticides).

The original industrial naptha from petroleum was a selected naptha from the straight-run processing of certain crude oils. Today this classification of petroleum products also contains pentane, hexane, and heptane produced largely from natural gas and the aromatics--benzene, toluene, and xylene--now recovered from petroleum by modern refining methods.

As stated earlier, industrial napthas are a group of liquid hydrocarbon compounds produced by the distillation of petroleum over selected boiling point ranges. The liquid hydrocarbon compounds that result from this selective distillation by refiners are known individually as petroleum ether, rubber solvent, light spirits, VM&P naptha, mineral spirits, and Stoddard Solvent. Lactol spirits is a compound made from naptha and lactic acid (Ref. 2). These compounds are highly complex mixtures of hydrocarbons produced over a narrow range of boiling points, and except for the relatively pure compounds of hexane and toluene, do not lend themselves to scientific classification or speciation. Not only will the different hydrocarbon species in each boiling point range compound vary from crude to crude, from refinery to refinery and from operator to operator; but the range of variance for individual species within a boiling point range may be from 0 to 100 percent, again depending on these variables.

For these reasons, KVB has elected not to provide a species breakdown for the boiling point range compounds known as 1) naphtha, 2) mineral spirits, 3) lactol spirits, and 4) Stoddard Solvent. The net result is that these compounds appear as a specie themselves and have not been further broken down into their individual components. However, there are two profiles which do provide a speciation for two of these compounds as used in specific processes. Profile 4-01-001 B lists the species for Stoddard Solvent and profile 4-02-006 J lists the species for mineral spirits. The speciation for these compounds, however, should be used with discretion for the reasons discussed above.

REFERENCES

1. Bland, W. F., and Davidson, R. L., "Petroleum Processing Handbook," McGraw-Hill Book Co., 1967.

2. Stecher, P. G., et al., "The Merck Index," an Encyclopedia of Chemicals and Drugs, Merck & Co., Inc., 1968.

APPENDIX II

EMISSION PROFILE DEVELOPMENT

APPENDIX II

EMISSION PROFILE DEVELOPMENT BY MEANS OF FIELD TESTS, INDUSTRY QUESTIONNAIRES AND LITERATURE DATA

DESCRIPTION

A unique aspect of the KVB HC Test Program was the development of emission profiles, the identification of the organic compound species represented by the total hydrocarbon emission rates currently given in emission measurements. Only one other study (Ref. II-1) had previously attempted a breakdown into generic classes. That was done primarily for the purpose of dividing emissions into reactivity classes. The results of that previous study have been widely used in the California South Coast Air Basin.

The primary objective of the KVB test program was to identify the organic compound emissions for each stationary source type in the Basin and develop a data management system capable of applying this information to the total hydrocarbon emissions in order to calculate the emissions of the individual organic compounds. Thus an emission profile was formulated for each Source Classification Code (SCC) emitting organic compound species in the Basin. Both point and area sources were included. In certain instances a further breakdown was made into individual industries identified by Standard Industrial Codes (SIC).

Another objective of the KVB test program was to predict future emission trends. Satisfying this objective required emission profiles based on SCC number rather than individual plant profiles based on individual plant characteristics. All plant devices identified by the same SCC and SIC number were given the same emission profile. Conversely, it was important that profiles be truly represetnative of the device in general. Additional advantages of developing aggregate profiles by SCC number were that: (1) estimations based on larger data samples were more statistically reliable than single data samples, (2) the profiles were compatible with the EIS

concept by describing devices by the SCC number system, and (3) the volume of profile data was reduced to a more manageable level.

The initial intent was to provide a profile for each SCC listed in the data base. In many instances, however, an individual profile was found to cover several SCC and SCC/SIC combinations. The profile data base was therefore formulated and indexed by a KVB profile number. Separate profile numbers (with identical specie distributions) were given to specific SCC/SIC combinations to facilitate data management, specifically the segregation of emissions from devices with smaller SCC codes in two different industry classes into the appropriate ARB Application Categories.

In each profile the organic species were initially identified by their appropriate SAROAD code, ARB reactivity classification (3 class) and molecular weight. Each profile was also "tagged" with other identifiers to assist those who may wish to use or evaluate these data. Associated with each emission profile was an estimate of its relative error. This "Error Estimate" was strictly subjective and was included to give a relative level of confidence to the specific profile. No statistical significance have been or should be given to these error estimates.

The ARB reactivity scheme and Error Estimate reporting formulas have since, for the purposes of this report, been replaced with a seven group chemical compound classification system, both of which are discussed in the introduction. A profile therefore contains a subjective estimate of the level of confidence in the profile and also lists the SAROAD code, chemical name and weight percent contribution of each specie. The species are also summed by the seven group chemical compound classification system.

METHODOLOGY

Two general approaches were used to formulate the emission profiles, one where only one data point was available to characterize many sources and another where multiple data points were available. In cases where a profile was available from only one source and that source was believed to be representative of all such source types in the Basin, then that particular source emission profile was used. An appropriate error estimate was given to reflect the relative confidence level of these data. It was

anticipated early in the program that a significant number of source types would fall into this category due to the limited amount of field tests available. Therefore, test locations were carefully selected on the basis of the representative nature of their emissions to all other devices of that particular type. In this way, data from this source could be correctly applied to other non-tested sources. Similarly, questionnaires were submitted to and received from selected solvent users. Follow-ups were made to assure that the data from these large and representative sources were obtained.

Two examples of formulating profiles based on one data point from a selected source are the following. The first, concerned with the emission profile typical of residual oil fuel combustion, was obtained by (1) recognizing that 95% of all residual oil combustion in the Basin occurs in utility boilers, (2) selecting a boiler that was "typical" of such devices in the Basin and finally (3) conducting a test on this unit. Multiple samples were taken and the profile was based on an average composition.

The second example involved the use of data from questionnaires. One source in the Basin, according to the South Coast Air Quality Management District files, was responsible for 90% of the emissions from adhesive use. A questionnaire was mailed to this source and follow-up contacts were made to assure that information from this source was received. The questionnaire contained a comprehensive breakdown of the solvent formulation and usage which formed the basis for the emission profile.

This approach of using one analysis to characterize a general source type also applied to profiles determined by inspection. For example, there were a few SCC's that specifically identify the solvent used in a coating operation or housed in a storage tank. In this case, a solvent identified by its SCC as toluene or xylene would be given an emission profile of 100% of that organic compound.

The second approach used was to develop emission profiles based on data from several sources within a particular source type. This involved (1) acquiring the data, (2) determining the relative magnitudes of each source compared to the total emissions from the source type, and

(3) forming a composite profile by factoring the data from each source by an appropriate weighting factor. In this manner, emission profiles were developed for individual source types that in actuality represented the average emissions from sources of that category (SCC number).

An example of this approach was the formulation of a profile for "Miscellaneous Organic Storage" in the Basin. While SCC numbers had been assigned to storage tanks for gasoline, jet fuel, crude oil, various solvents, etc., the miscellaneous category covered all other petroleum products not listed. The following table presents a summary of the calculation procedures employed to determine this profile. Listed across the top are the various organic products identified and the fraction of the emissions from fixed roof tank storage for each based on information compiled from the SCAQMD file. Listed down the page are the various organic species that have been identified in the emissions from these products. The weight percentages of each specie associated with the product is listed in the appropriate column. The weight percentage for asphalt and Stoddard solvent were determined from KVB test data. The adhesive percentages came from questionnaire data. The remainder of the percentages were specified (e.g. 100% for acetone) or estimated based on contacts with industry (e.g. the breakdown of alcohols and ketone). The weight percent of each organic compound in the composite profile was determined by multiplying the weight percents by the appropriate fractions and are listed in the right hand side of Table II-1.

Contained within the following three sections are a thorough discussion of the three sources of information which comprise the basis of all the developed profiles:

- Field Source Test
- Solvent Use Questionnaire, and
- Literature Research

TABLE II-1. COMPOSITE PROFILE FOR MISCELLANEOUS PETROLEUM STORAGE

(Fixed Roof Tanks)

Product Stored	Acetone	Adhesive	Alcohol	Asphalt	Perchloroethylene	Ethylene Dichloride	Formaldehyde	Ketone	Stoddard	Xylene	Others	Composite
Fraction of Emissions	0.163	0.022	0.084	0.078	0.051	0.004	0.004	0.191	0.071	0.057	0.275	
Organic Compounds												
Acetone	100.0	4.0										16.4
Perchloroethylene					100.0							5.1
Ethylene Dichloride						100.0						0.4
Formaldehyde							100.0					0.4
MEK								65.0				12.4
MIBK								35.0				6.7
Xylene										100.0		5.7
Toluene		5.6									31.0	8.6
Ethane				1.0								0.1
Ethylene				2.0								0.2
Propane				13.0								1.0
N-Butane				18.0								1.4
I-Butane				8.0								0.6
N-Pentane				18.0								1.4
I-Pentane											12.5	3.4
Hexane		84.6		2.0							25.0	8.9
I-Hexane				12.0								0.9
Heptane				14.0								1.1
I-Heptane				11.0								1.0
I-Octane				1.0					0.8			0.1
I-Nonane									27.3			1.9
I-Decane									69.4			4.9
I-Undecane									2.4			0.2
Ethyl Acetate		5.8									15.5	4.4
C-7 Cyclo-paraffins											15.5	4.2
Isopropyl Alcohol			40.0									3.4
Ethyl Alcohol			30.0									2.6
Isobutyl Alcohol			30.0									2.6

KVB 26200-795

FIELD SOURCE TESTING

Background

The field tests conducted by KVB provided a realistic assessment of the organic emissions from stationary sources in the California South Coast Air Basin. In that standardized measurement procedures for organic emissions were as yet unestablished at the time this study was conducted, KVB felt it important to obtain a consensus of those active in the field of developing test plans and procedures. The California ARB, EPA, SCAQMD, and Western Oil & Gas Association (WOGA) were the agencies most involved with this effort.

In all, 618 field samples were taken by KVB and analyzed at Analytical Research Laboratories Inc. (ARLI) or KVB. All GC/MS analyses of the field samples were conducted at ARLI who also measured aldehydes and total organic content (TOC).

The KVB test crew consisted of two engineers and two technicians. On major tests all four worked together. These major tests required from two to ten working days at each test site. Occasionally the crew divided into two-man teams to collect from two to four samples on a special device or process that could not be obtained during a major test.

Test Methodology

The objectives of the KVB test program were to develop techniques and equipment as necessary to (1) determine the hydrocarbon emission rate from both ducted and fugitive sources, (2) collect and preserve representative samples of these emissions and (3) analyze the samples for their organic chemical composition. The general approach to emission rate determination was to either measure the emission rate or to determine it by calculations from process data or by experiment. From sources with stacks, emissions were determined by pitot traverse. Various techniques were used on fugitive emission sources. Where information was available on the amount of organic material lost from a process, this was used to determine emissions. Where the

emissions were due to leaks or spills or other types of fugitive emissions, an attempt was made to either measure or estimate those emissions. In some instances, special experiments were conducted to obtain estimates of emission rates. An example of the type of experiments that were conducted is the determination of the amount of solvent which was emitted from an architectural coating as it was drying or curing. KVB's tests indicated that as much as 30 to 40 percent of the solvent is permanently retained in the paint after it is cured. Other experiments included emissions from open ponds, asphalt paving, auto gas tank filling, and domestic solvents.

For analytical purposes, samples of emission gases were collected in the following type of containers:

- glass tubes filled with activated charcoal (NIOSH approved)
- borosilicate glass gas collecting bottles
- Tedlar bags
- glass bulb containing 1% sodium bisulphite solution (aldehyde determinations)

The charcoal sorbent tubes were used to collect aliphatic organic compounds with boiling points above that of n-pentane and all other compounds from C_1 - up. The gas collection bottles and bags were used to collect aliphatic compounds with boiling points below that of n-pentane. On most major sources, a combination of sorbent tubes and either bags or bottles were used. Bags or bottles were used for the entire compound range when utilized for grab sampling.

All samples were analyzed using gas chromatography (GC) and mass spectrometry (MS) techniques on a tandem GC/MS apparatus. The bottle or bag grab samples were introduced directly into the apparatus while the samples collected on charcoal were first extracted with carbon disulfide. Because of the survey nature of the program only those GC peaks which contributed at least 1% of the total hydrocarbons were identified unless a substance of special importance was suspected to exist in the sample.

Presented in the following sections are a detailed description of the field test and laboratory equipment, some explanation for their selection, the results of test runs using this equipment, and a detailed description of test procedures and data reduction techniques followed during the program.

Sampling

A. Equipment Description--

1. Sampling train--KVB designed and built two identical portable sampling units that could:

- measure stack gas temperature and velocity
- filter out particulates larger than 2 microns
- collect samples in sorbent tubes, glass or polybags.

The general flow diagram, Figure II-1, illustrates all components of the assembly which are available to be swtiched into several sampling modes to conform to requirements dictated by the source to be tested. The components are:

- a sample nozzle
- a filter holder with 2.5 micron pore size glass fiber filter
- a filter and line heater and thermostatic control
- an impinger train containing LiOH crystals
- a borosilicate (Pyrex) gas collection bottle
- a sorbent tube train with thermometer and vacuum gauge
- a Brooks flowmeter with needle valve flow control
- various interior and exterior valves and connectors as indicated in Figure II-1
- a meter connection to PD gas meter
- a pressure gauge and pyrometer for use with a pitot tube

The above system was unitized within a portable aluminum closure. Its interior arrangement permitted significant freedom of directional orientation for rigging convenience. In addition to the packaged sampling unit, the following additional test equipment was used during the testing program:

- an "S: type pitot tube and a standard pitot for velocity measurements
- two thermocouples for stack temperature measurements

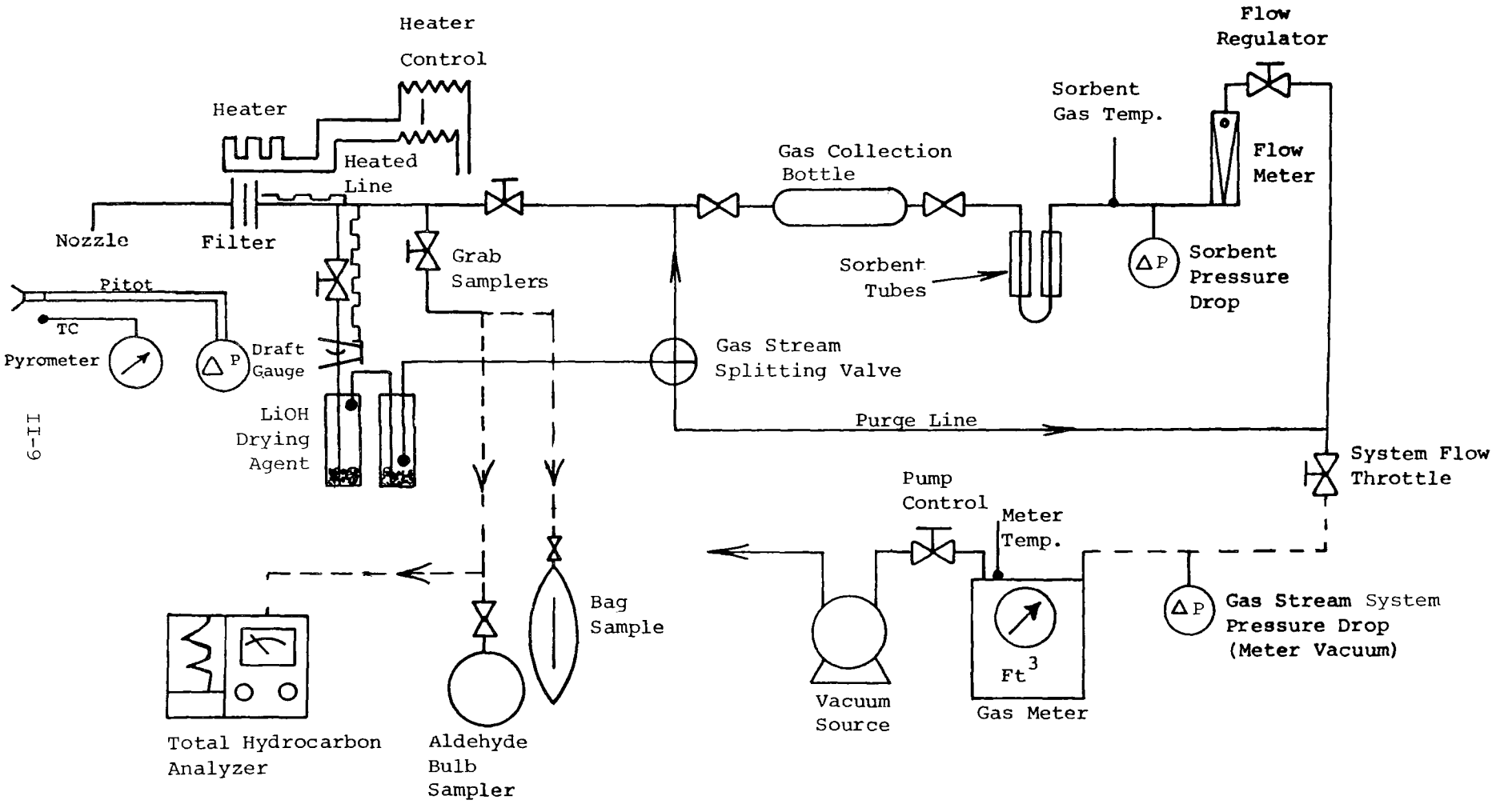

Figure II-1. Complete organic sampling train as set up for a hot combustion source (> 180 °F) (Mode 1 in Table II-4).

KVB 26200-795

- three dry gas meters
- additional glass sorbent tubes containing charcoal sorbent
- two Gast vacuum pumps
- six Spectrex diaphragm pumps
- two squeeze bulb type hand pumps
- an Orsat analyzer for CO, CO_2, O_2, and N_2 determination
- a Draeger gas detector with detector tubes
- a TLV sniffer wtih recorder (a total hydrocarbon tester with 0-10,000, 0-1,000, and 0-100 ppm range)
- an anemometer
- thermometers of various ranges

Typical test setup and configurations are discussed later under sampling methods.

2. Sampling Train Selection--

a. LiOH Impinger--The lithium hydroxide in the dry impinger train was selected for use based on experience gained on the Apollo space capsule. Initially an ice water impinger was considered for moisture, NOx, SOx, and CO removal. The problem with this approach was that it was felt that the alcohols and some other oxygenates would be highly water soluble and would not be easily separated for analysis. (The impinger solution was analyzed for hydrocarbons.) LiOH was used in the Apollo life support system to adsorb primarily CO_2. In the sampling train it neutralized NOx and SOx which would react with the hydrocarbons and adsorbed most of the condensed moisture. Furthermore according to Apollo data the LiOH does not adsorb hydrocarbons. A CS_2 extraction and a hydrocarbon analysis were made on the impinger contents and no hydrocarbons were found.

The probe, filter, line and valves leading to the impinger were maintained at less than 220 °F. Some light condensation was found downstream of the impingers in the collection bottles and sorbent tubes but this did not interfere with the hydrocarbon determinations. The water content of the exhaust gases was determined using a separate water knockout train, or aquasorb.

b. Sorbent--The suitability of several different types of sorbent materials was investigated. The materials tested included: Tenax GC, Carbosieve B, activated charcoal, and XAD-2 resin. The criteria observed in the selection of the sorbent included quantitative retention and recoverability of every analyte possible. These qualities were dimensionalized by measurement of breakthrough volumes and recovery efficiencies. Table II-2 presents the breakthrough volumes of the sorbents (25 °C) for hexane and benzene. These analytes were considered to represent about the upper limit of materials that can be analyzed in gas grab samples. Carbosieve B and activated charcoal showed particularly high retention capacities.

Another important parameter in sorbent selection is the analyte recovery efficiency. Elevated temperature, thermal stripping (with a purge gas or in vacuo) or adsorbed components on Tenax, Carbosieve B and XAD-2 was considered but later rejected because the entire sample must be committed in a single determination. Recovery efficiencies using the thermal/purge-gas techniques also showed high molecular weight discrimination (see Table II-3).

TABLE II-2. RETENTION EFFICIENCIES OF VARIOUS SORBENTS

	Breakthrough Volumes,* l/g sorbent	
	Benzene	Hexane
Carbosieve B	47	65
Tenax GC	3	1.4
XAD-2 Resin	12	20
Activated Charcoal	30	43

*Measured as the volume of gas/grams of sorbent in cartridge to give a 0.1% FID response to gas stream containing 50 ppm of test component.

TABLE II-3. RECOVERY EFFICIENCY OF PURGE-THERMAL STRIPPING OF SELECTED ANALYTES

	TENAX % Recovery	Carbosieve B % Recovery	XAD-2 % Recovery
Benzene	105	--	--
n-C_7H_{16}	100	11	--
n-C_8H_{18}	99	<1	--
n-C_9H_{20}	94	<1	--
n-$C_{10}H_{22}$	72	<1	62
n-$C_{11}H_{24}$	67	<1	60
n-$C_{12}H_{26}$	67	<1	--
n-$C_{13}H_{28}$	58	<1	--
n-$C_{14}H_{30}$	56	<1	--
n-$C_{15}H_{32}$	61	<1	--
n-$C_{16}H_{34}$	46	<1	--

Solvent stripping for analyte elution preparatory to chromatographic analysis was investigated. Carbon disulfide (CS_2) was found to be an attractive solvent. Many of the other common solvents, such as methylene chloride (CH_2Cl_2), chloroform, hexane, benzene, etc., tended to swamp the chromatogram, obliterating any signals of components that have boiling points even decades higher.

Unfortunately, it was found that Tenax GC is soluble in CS_2 as well as in CH_2Cl_2. Carbosieve B showed poor recoveries with solvents. Testing was therefore primarily focused on solvent extraction of activated charcoal with CS_2 and XAD-2 resin extraction with CH_2Cl_2 (CS_2 also dissolved XAD-2). Table II-4 presents the results. Mueller and Miller (Ref. II-2) reported similar efficiencies for halogenated and oxygenated hydrocarbons using charcoal adsorption followed by CS_2 elution. Based on the data they presented and the precedent set by the National Institute for Occupational Safety and Health (NIOSH) in the selection and published (Refs. II-3 to II-5) characterization of the charcoal/CS_2 analysis scheme, the use of coconut-derived activated charcoal as supplied by Mine Safety Appliances or SKC, Inc. was selected as the material of choice for source sampling.

TABLE II-4. SORBENT RECOVERY EFFICIENCIES FOR NORMAL ALKANES USING SOLVENT ELUTION TECHNIQUES

n-Alkane	Activated Charcoal/CS_2	Carbosieve B/CS_2	XAD-2 Resin/ CH_2Cl_2
n-C_6	97	<1.0	Solvent Masked
n-C_7	98	<1.0	Solvent Masked
n-C_8	92	<1.0	Solvent Masked
n-C_9	87	<1.0	Solvent Masked
n-C_{10}	90	<1.0	100+
n-C_{11}	90	<1.0	97
n-C_{12}	90	<1.0	--
n-C_{13}	100+	<1.0	--
n-C_{14}	76	<1.0	--

3. TLV Sniffer--The Bacharach TLV sniffer was selected for use on this program to (1) provide a preliminary estimate of total hydrocarbon emissions, (2) provide an indication of variations in hydrocarbon concentrations in the exhaust gas due to process changes and (3) assist in the quantifying of fugitive emissions. It also served as indicator check on the results attained by GC/MS analysis of fuel samples.

The TLV sniffer is an improved version of a lower-explosive-limit (LEL) detector of combustible organics with an improved sensor and an accuracy greater than the conventional LEL type instruments. It detects hydrocarbon emissions and quantitatively records them in ppm as hexane; however, this read-out can be converted to any specific hydrocarbon or LEL readings. Because it is fire marshall approved, it can be used in refineries or other locations where potentially explosive mixtures exist. It incorporates a contact mass sensor with resistance to catalytic poisonings, an explosion proof potentiometric recorder output, automatic voltage regulation, meter display, sampling pump and a rechargeable battery power source. The system

uses the heat of combustion of the gas-in-air mixture as hydrocarbon sensing. A relative response curve supplied with the instrument permits quantitative measurement of some individual gas species.

B. Sampling Method--

1. Train selection--The specific sampling train configuration to be used on a particular source depended on the following factors:

- the classes of organic compounds expected in the emissions
- the temperature of the emissions
- the water content of the emissions
- the type of emission flow (i.e., ducted or fugitive).

Table II-5 indicates the sampling equipment used for 17 different source types. For each ducted source the universal sampling train presented earlier in the section titled "Sampling" was adapted as indicated in Table II-5 by the "mode" numbers one through five. Figures II-1, II-2, and II-3 show the first three of these different adaption modes. Modes four and five involve the measurement of fugitive emissions. Figures II-4 through II-7 illustrate the sampling setups for a typical fugitive source, in this case a petroleum transfer line valve. In Figures II-4 and II-5 the setups for a cold valve are shown for two different leak rates while in Figures II-6 and II-7 the setups for a hot valve (T > 160°F) are shown.

Figure II-1 illustrates the train setup for high temperature combustion source sampling. The train filters out particulates at stack temperature, collects andehydes, collects moisture, NOx, SOx and CO on LiOH in two impingers, and collects hydrocarbons by entrapment in a bottle and by adsorption in sorbent tubes.

Figure II-2 illustrates the sample train as used sampling high and low temperature sources with insignificant water vapor content. The train filters out particles, collects ahdehydes, and collects hydrocarbons by entrapment and by adsorption. It records fluctuation in total hydrocarbon emissions using the TLV sniffer.

TABLE II-5. TEST AND SAMPLING TRAIN CONFIGURATIONS BY SOURCE TYPES

Sampling Train Components	SOURCE TYPE																
	Refinery Combustion	Fuel Combustion	Waste Disposal and Burning	Coking Operation	Catalytic Burners	Metal (Smelting) Production	Heat Treated Surface Coating	Air Dried Surface Coating	Printing Operations	Rubber, Adhesive Production	Hydrocarbon Storage	Degreasing, Stripping	Paint Shops	Dry Cleaning	Oil Field Production	Oil, Solvent Transfer, Cold	Oil, Solvent Transfer, Hot
Filter and Lines Heated	X	X	X	X	X	X	X										
Filter and Lines Unheated								X	X	X	X	X	X	X	X	X	X
Draeger Gas Indicator	X	X	X	X	X	X	X	X	X	X	X	X	X	X	X	X	X
Total Hydrocarbon Instr.	X	X	X	X	X	X	X	X	X	X	X	X	X	X	X	X	X
Orsat Analyzer	X	X	X	X	X	X											
Aldehyde Bulbs	X	X	X	X	X	X	X		X	X							
Impinger, LiOH	X	X	X	X	X	X	X										
Sorbent Tubes *	X	X	X	X	X	X	X	X	X	X	X	X	X	X	X	X	X
Gas Collection Bottle *	X	X	X	X	X	X	X	X	X	X	X	X	X	X	X	X	X
Bags, Metered Flow					X						X				X	X	
Bags, Rapid Fill	X		X									X					
Minimum Sample Nos.	5	4	5	4	2x5	4	3	2	3	3	3	2	1	1	1	2	1
Velocity Measurement	X	X	X	X	X	X	X	X	X	X		X	X	X			
Meter	X	X	X	X	X	X	X	X	X	X	X				X	X	
Gast Pump	X	X	X	X	X	X	X	X	X	X							
Pyrometer (Source T)	X	X	X	X	X	X											
Thermometer (Source T)							X	X	X	X	X	X	X	X		X	X
Psychrometer							X	X	X	X	X	X	X	X			
Hand or Small Pump											X	X	X	X	X	X	X
Mode	1	1	1	1	1	1	2	2	2	2	2	3	3	3	4	4	5
Type No.	1	2	3	4	5	6	7	8	9	10	11	12	13	14	15	16	17

* Either or both.

KVB 26200-795

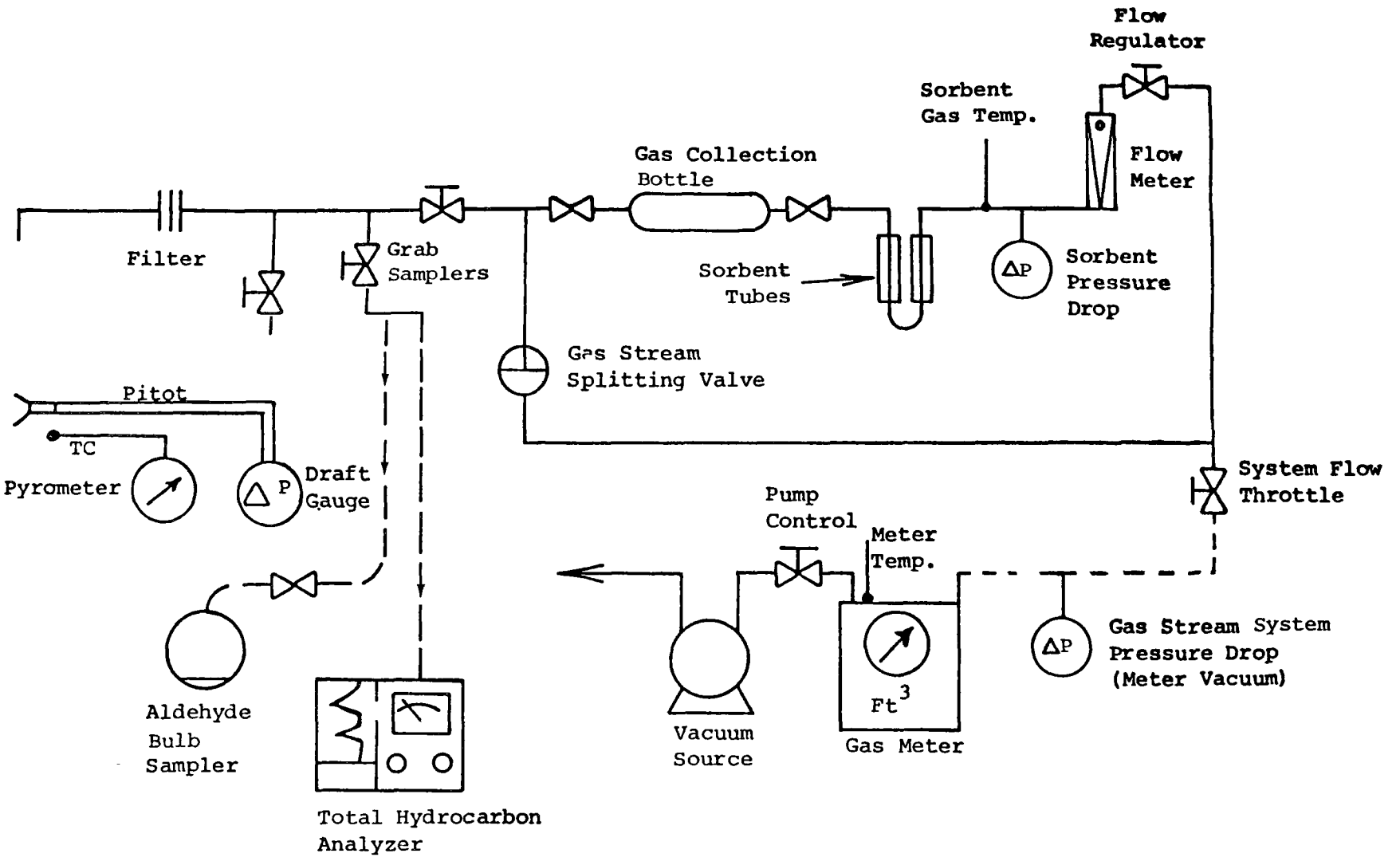

Figure II-2. Organic sampling train configuration for continuous solvent process related sources of high complexity (Mode 2, Table II-4).

Figure II-3 shows the configuration used in sampling cold solvent sources such as dry cleaning, degreasing and painting processes. The train filters particulates, monitors total hydrocarbon emissions fluctuations, and entraps hydrocarbons in gas collection bottles.

Figures II-4 and II-5 illustrate sampling setup for testing fugitive emission sources. The rate of emission is measured, total hydrocarbon concentrations monitored, and gaseous emissions are collected for analysis. In Figure II-4 the H/C leak rate is so great that the vapors fill the tent and drive the gas meter. In Figure II-5 a pump is used to draw purified air through the tent to pick up the emitted H/C vapors.

Figure II-6 and II-7 illustrate test setup for sampling a high temperature fugitive emission source. In Figure II-6 aluminum foil is substituted for polyfilm and rates are measured as Figure II-4 or II-5. When the foil cannot be used the setup in Figure II-7 is used. The temperature of the source is measured, a grab sample is obtained in a gas collection bottle, and the concentration of total hydrocarbons is measured. The leak rate is obtained by applying engineering judgments.

2. Ducted sources--Exhaust gas volumetric flow rates were determined by measurements using EPA Method #1 described in the Federal Register. These measurements were checked by material balance calculations if sufficient source information was available. Before testing, approximation of the gaseous hydrocarbon concentrations was made utilizing a Draeger gas detector with specific indicator tubes, or the TLV sniffer or both.

The ducted sources were sampled at an accessible point closest to the point of average gas velocity. An attempt was made to maintain an isokinetic sampling rate. Sampling time was adjusted according to hydrocarbon concentration to avoid breakthrough on the sorbent tube.

The test data and process data were recorded throughout the test. At the end of the test period the impingers were sealed, labeled and delivered to the laboratory. The sorbent tubes were removed from the train by disconnecting the flexible tubings from them, sealed with polyethylene end caps,

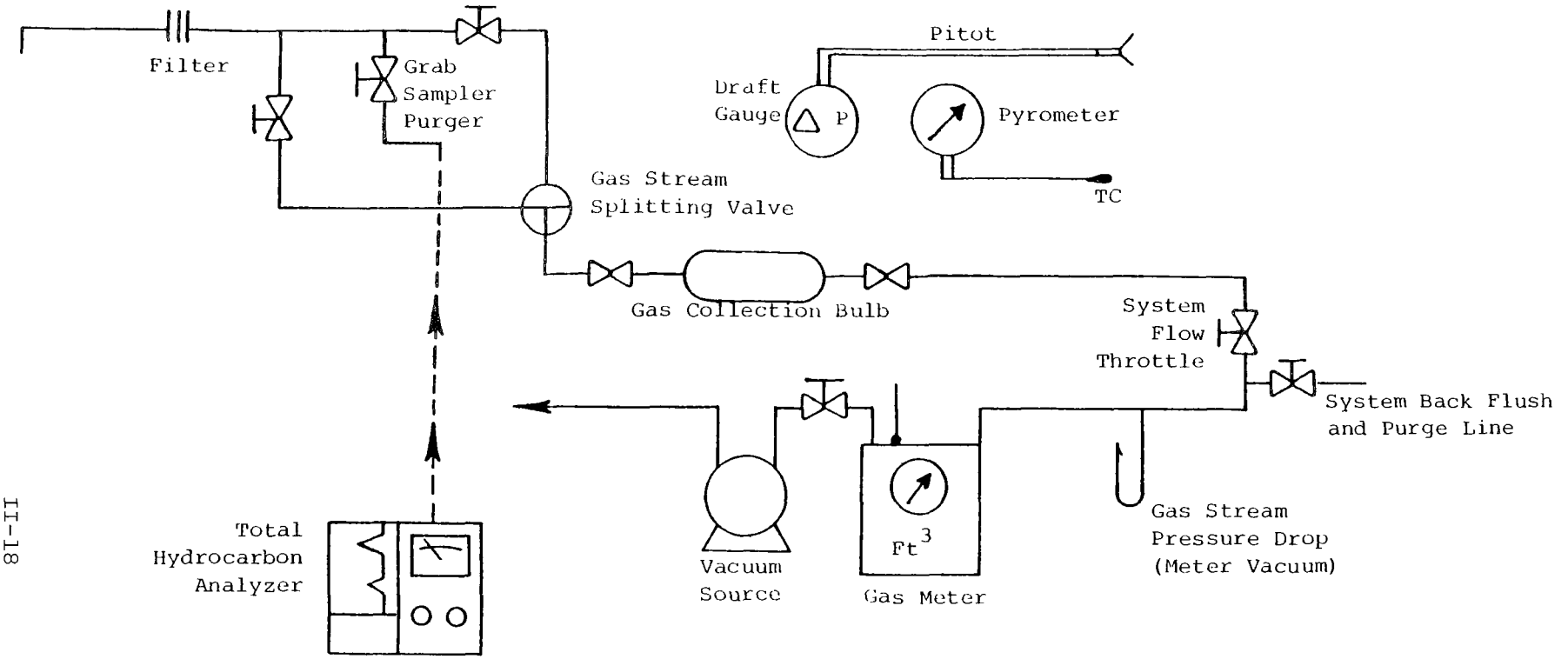

Figure II-3. Organic sampling train configuration for solvent operations in batch operations (Mode 3, Table II-4).

KVB 26200-795

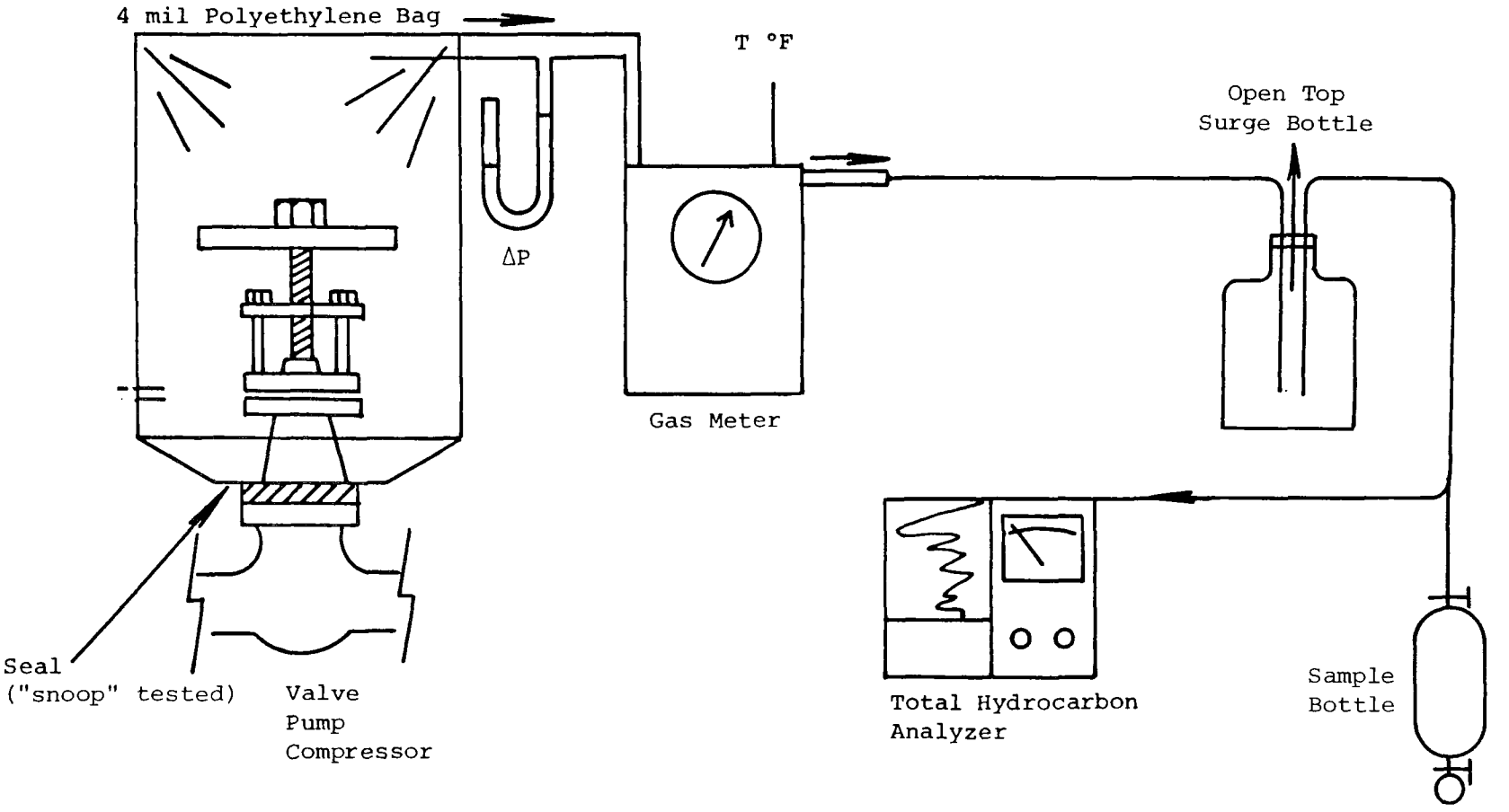

Figure II-4. Leak rate and concentration measurement of ambient temperature fittings. High leak rates. (Mode 4, Table II-4).

KVB 26200-795

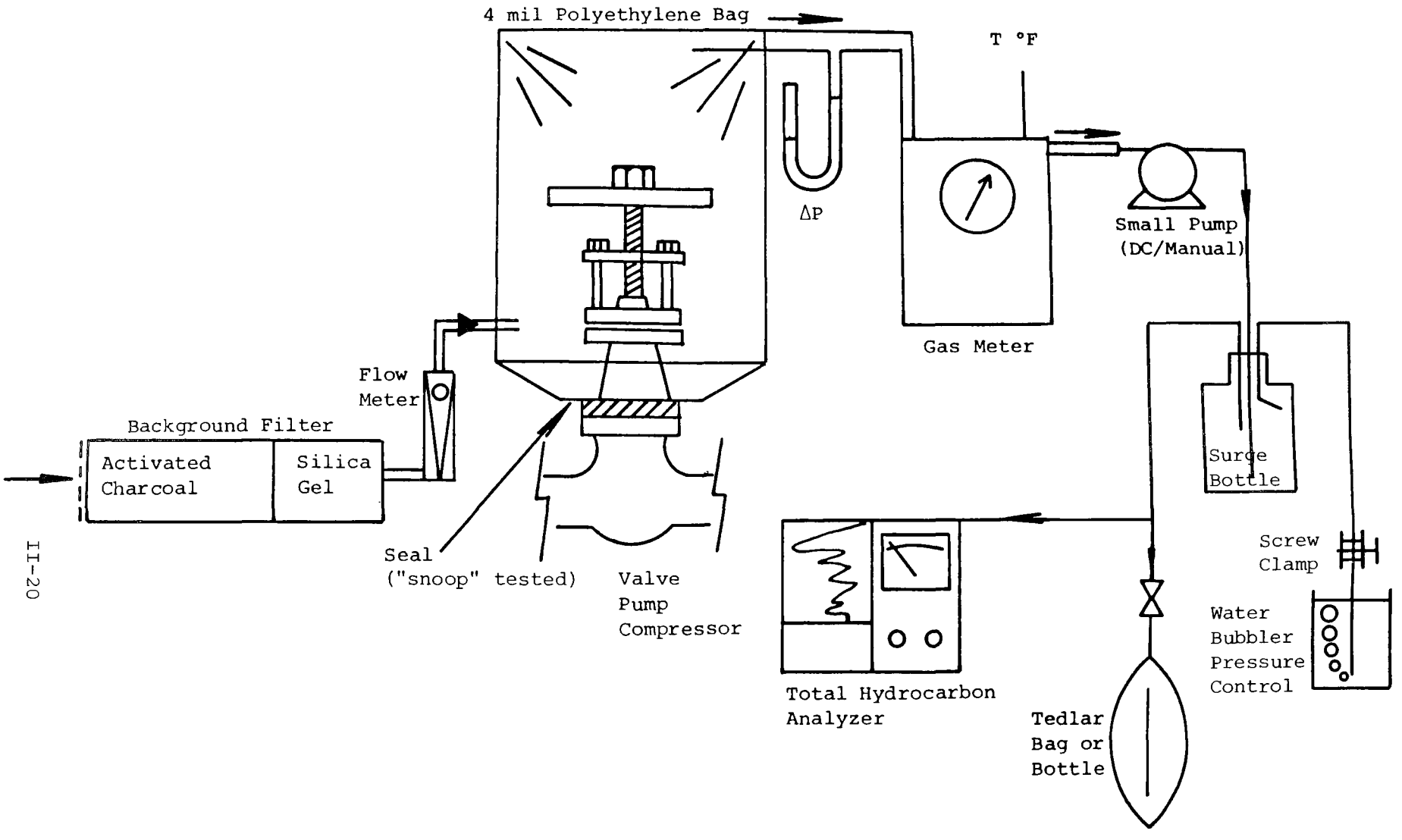

Figure II-5. Leak rate by dilution sweep and sampling of ambient hydrocarbon fitting. Low leak rates. (Mode 4, Table II-4).

KVB 26200-795

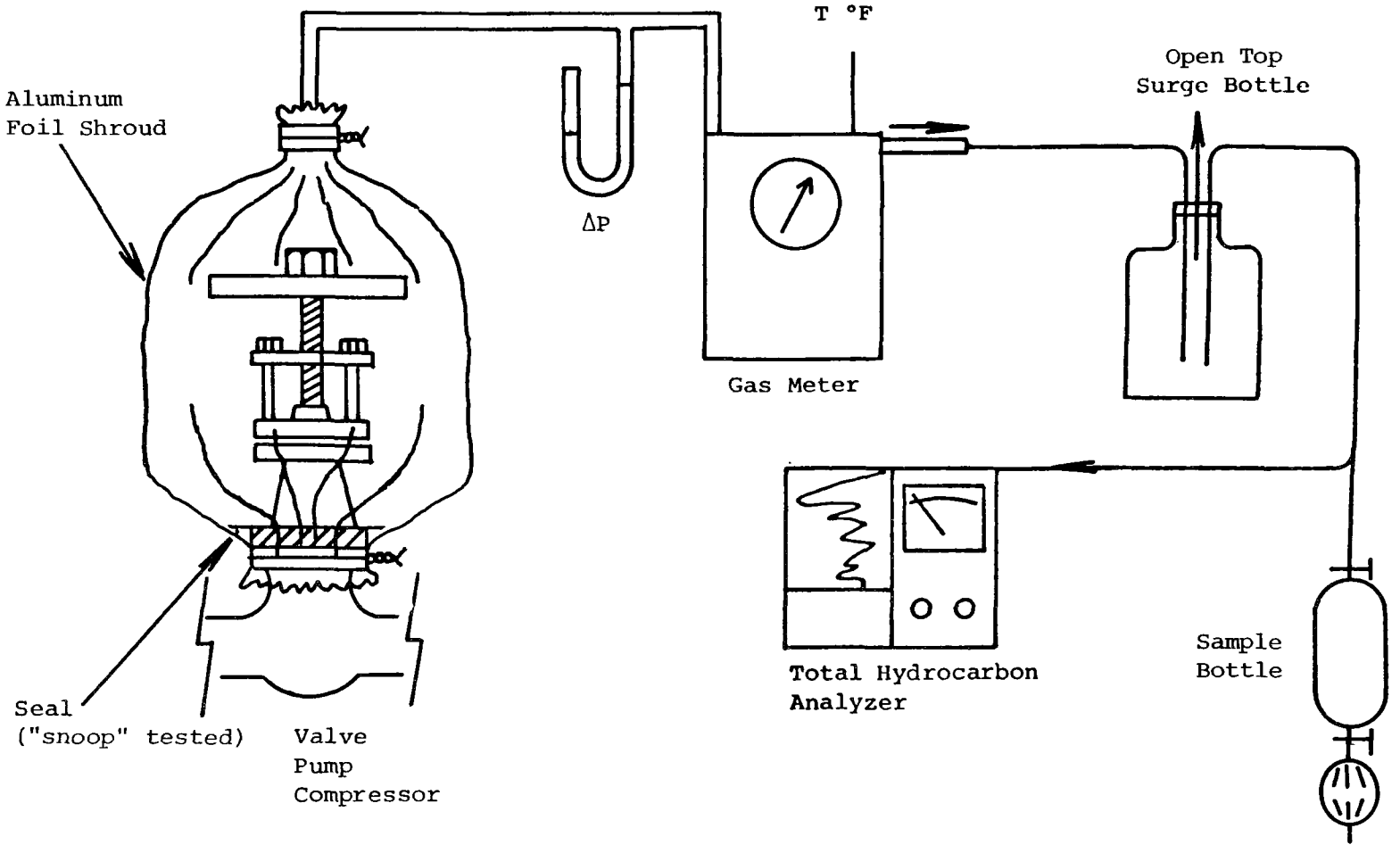

Figure II-6. Leak rate measurement and concentration measurement of high temperature fitting.

KVB 26200-795

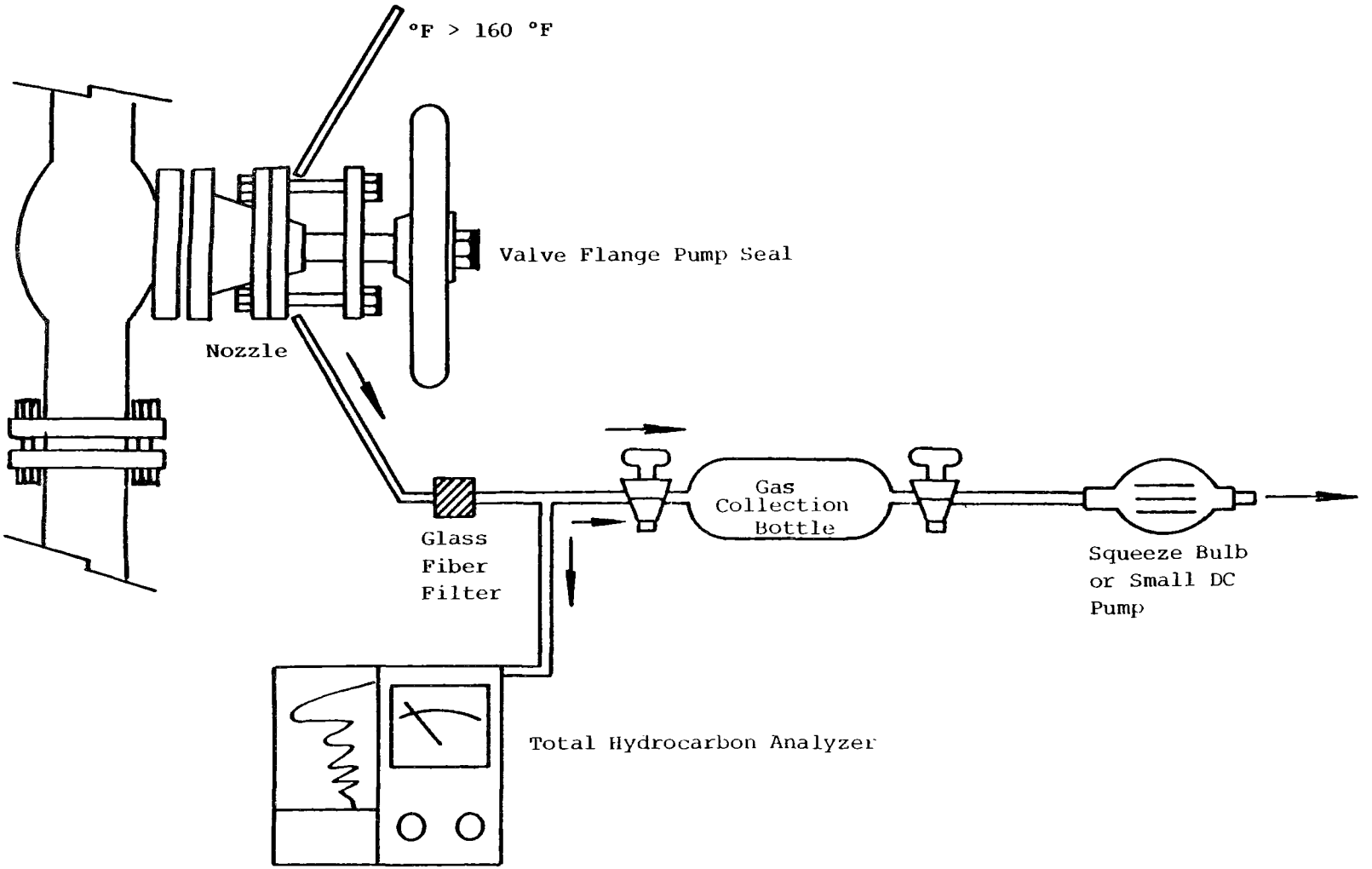

Figure II-7. Hydrocarbon sampling from hot oil or solvent transfer (Mode 5, Table II-4_.

KVB 26200-795

labeled, identified and placed into a shipping container. The gas collection bulbs, bottles and bags were closed, labeled, identified and shipped to the laboratory for analysis.

Wherever possible, a small sample of the process feed and that of the product were obtained for analytical determinations, such as evaporation rate and vapor pressure. These data were used to obtain a material balance.

The TLV sniffer was used to indicate expected or unexpected process fluctuations.

3. Fugitive sources--The measurement of emission rates for non-ducted or fugitive emissions required ingenuity on the part of the test crew. As mentioned earlier, frequently these emissions were estimated or calculated on process data such as solvent make-up rates or on experimental data such as evaporation rates or emission factors for petroleum storage tanks. In certain cases, it was desirable to make selected measurements in order to estimate total emission rates. The most useful techniques for detecting and measuring leak rates involve the use of bubbling soap solutions and tenting with polyfilm sheeting. KVB used this approach in refineries, chemical plants, etc. where leakage losses could not be readily detected from the process flow rates.

The approach used was to usually check all of the accessible hydrocarbon-transfer fittings (valves, flanges, etc.) for signs of leakage (stains, etc.). Next the fittings were checked with soap solution, Figure II-8. Fittings showing leakage with soap solution were categorized as to their estimated leakage rate: low, medium, or high. Depending on the time available and the number of "leakers", a selected, representative number of leakers were tented and their emissions measured.

The test setup for measuring leakage rates is shown in Figure II-5. The small Spectrex pump pulls a low rate of air through the polyfilm envelope. The air drawn into the envelope is filtered to remove background hydrocarbon where necessary and is metered with a rotameter as shown. The outlet air

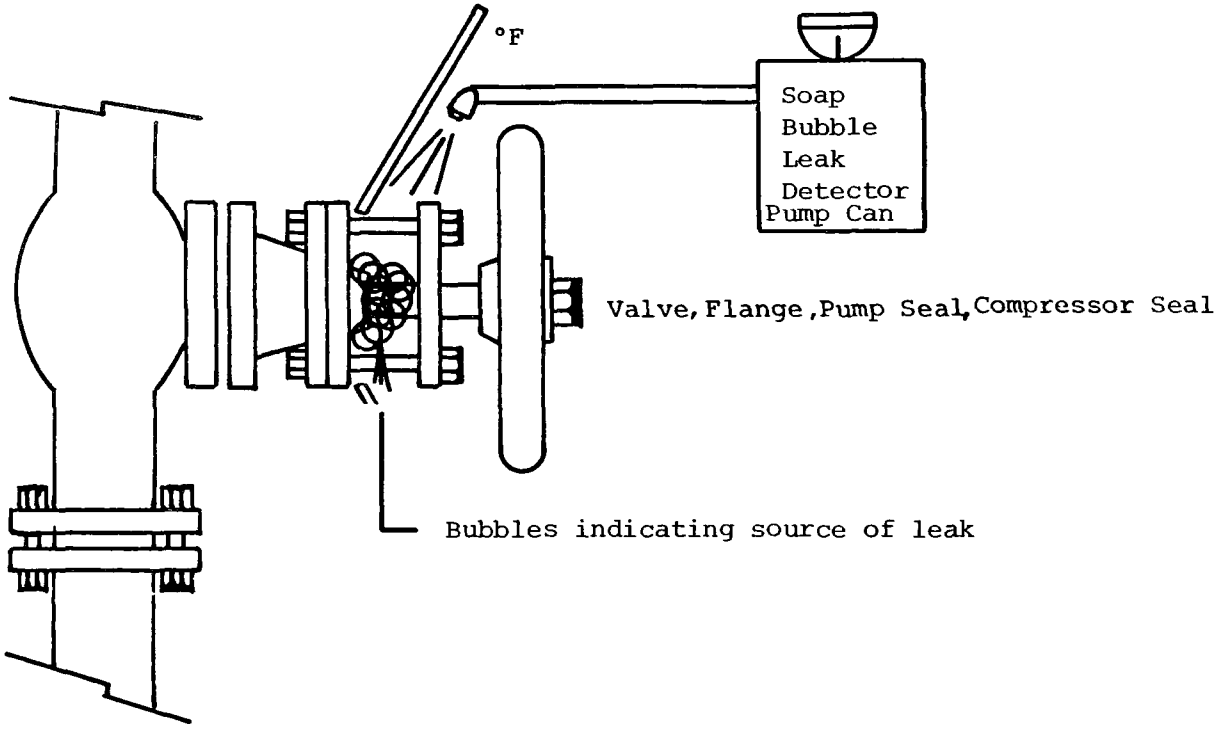

Figure II-8. Soap bubble detection and temperature evaluation of hydrocarbon fittings.

and hydrocarbon mixture is metered and delivered to the TLV analyzer where the total hydrocarbon level is measured continuously. When a steady state has been reached, the TLV analyzer reads a constant ppm level. Readings are taken for several minutes. Then a Tedlar bag of the emissions is taken. The total hydrocarbon leak rate is determined by the following calculations:

$$HC = 1.36 \times 10^{-5}\ ppm_{TLV} \times \frac{ft^3}{t}$$

where

HC = hydrocarbon leak rate, lb/hr

ppm_{TLV} = parts per million total hydrocarbon concentration detected on TLV as hexane

ft^3 = meter reading on gas meter corrected to 60 °F and 29.9 in. Hg, in cu. ft.

t = time in minutes ft^3 was measured

$$1.36 \times 10^{-5} ppm = \frac{1}{10^6} \times \frac{60\ min/hr}{379\ ft^3/lb\text{-}mole} \times 86\ (\text{Mwt. of Hexane})$$

This calculation was checked with the data from the Tedlar bag. The volume of emissions collected in the bag and the filling time of the bag was measured and recorded. The total hydrocarbon content of the bag was determined by GC analysis in the laboratory as well as the specie breakdown and average molecular weight. From this information the total hydrocarbon emission rate was determined to check the results determined by the TLV. The percent composition determined by GC analysis was used to apportion the total hydrocarbon emission rate among the various species.

Based on these measured leakage rates, the leakage rates for other fittings were estimated on the basis of observing their performance during the soap-solution test. KVB also applied the use of the TLV sniffer to determine relative total hydrocarbon emissions from these types of fittings. This proved to be successful and it became particularly valuable for use on hot fittings and on pump seals.

Sample Analysis

The primary analytical chemistry work on this program was performed by Analytical Research Laboratories Inc. (ARLI), Monrovia, CA. Their final report is presented in the appendix of Ref. 5. ARLI assisted KVB in the design of the sampling train, the selection of a sorbent and the design of a quality control system. This section is a summary of the equipment and methods used in analyzing field samples.

Samples received from the field included: 500 ml or 250 ml glass bottles, Tedlar bags, glass tubes containing charcoal sorbent and 100 ml flasks containing 1% sodium bisulfite solution. The bottles, bags and sorbent were analyzed for all organic species while the liquid in the flask was analyzed only for aldehydes.

Most of the gaseous samples in the bottles and bags were analyzed within 2-3 days following receipt, except for a small number that were processed as long as two weeks later. Several tests were made with synthetic samples to evaluate storage effects on the contents of capped charcoal sampling tubes. Recoveries did not change, within experimental error, between 24 hours and 30 days. Therefore, the charcoal samples could stand for longer periods without fear of losses, and were not usually analyzed until after the gas samples in the same sets had been analyzed. The charcoal eluates were usually run within an hour after the carbon disulfide was added to extract the sample components.

Initial analysis of all samples was conducted using a gas chromatograph (GC). Lower boiling component identifications were based on retention times established by repeated analyses of standards. If there were questions as to the positive identity of a GC peak,* the sample was rerun using GC/MS methods for the identification. This approach was often necessary because

*Conventional gas chromatograph data are recorded on a strip chart with a recording pen which moves literally in proportion to the concentration of the gas being emitted from the GC column. The resultant image on the chart is a peak-shaped trace whose area is proportional to the quantity of the gas present. Thus the term peak is used to refer to an indication of a component of the gas mixture being analyzed.

a number of chromatographic peaks contained at least two and sometimes three components. The mass spectra also provided a basis for determining ratios of the components in the GC peak being examined. These data were then used in making quantitative measurements of the contents of chromatographically unresolved but computer-integratable peaks. All peaks which contributed at lease one volume percent of the total organic vapor were identified and quantified.

A Beckman Model GC-55 equipped with a precision temperature-programmed, column oven and a flame ionization detector (FID) was used for most of the GC work performed on the program. The column was 1/8" O.D. by 6 ft. long stainless steel tubing containing a stationary phase of 100-200 mesh Poropak Q. Using the analytical conditions described below, this column furnished good resolution of the lowest boiling materials encountered while still eluting with good results the higher boiling hydrocarbons representing the top of the range of interest.

Analyses were performed using helium as the carrier gas at a flow rate of 30 cc/min. Detector gas flows were: H_2 - 40 cc/min; air - 300 cc/min. The following conditions were used for GC analyses: 6 min. at 40 °C followed by temperature programming at 10 °C/min to 190 °C and holding at 190 °C for approximately one hour.

The effluent from the Beckman GC-55 gas chromatograph was split into two streams. One stream was directed to the FID of the GC, the other to a heated transfer line which carried the stream to a Flinnigan Jet Separator and into the mass spectrometer. The separator provided a twenty fold concentration of the material of interest in the gas stream.

The mass spectrometer used on this program was a Consolidated Electrodynamics Corporation (CEC) Model 21-104. This was a 180 degree magnetic sector instrument having an electron impact ion source and an electron multiplier detector system which permitted moderately high-speed mass scanning.

Multiple MS scans were taken when a GC signal was observed on the strip chart recorder. Multiple scan studies indicated that approximately 2 seconds were required for the maxima to be observed by the MS. Multiple scans were required to insure representative ion pair formation.

Mass spectra were interpreted manually using such reference works as:

- "Compilation of Mass Spectral Data," Cornu, A. and R. Massot, Heyden & Son, Ltd., London, England, 1966.
- "Index of Mass Spectral Data," AMD II, Americal Society for Testing and Materials, Philadelphia, 1969.
- "Eight Peak Index of Mass Spectra," Atomic Weapons Research Establishment, Aldermaston, England, 1970.
- "Atlas of Mass Spectra Data," Stenhagen, E., et al., Interscience, New York, NY, 1969.
- "API Project 44 Selected Mass Spectra Data," Thermodynamics Research Center, Texas A&M University.

When an unknown peak could not be positively identified by this means, the spectrum was compared with the mass spectra of some 27,000 different compounds in the library of the Cyphernetics Corp. Mass Spectral Search System. This computerized search system was directly accessible on a time-shared basis. It was successfully used to verify assignments made during the earlier work on this program.

A spectrophotometric method similar to that specified by the NIOSH was used for the determination of aldehydes. The total volume of liquid in the aldehyde sample flasks was measured, and an aliquot taken for the determination. The sample was allowed to react with a modified Schiff's reagent prepared from rosanaline hydrochloride and sodium bisulfite. After a suitable development time, the adsorbance was read at 580 mμ against a reagent blank on a UV-vis spectrophotometer. Concentration was read from a calibration curve. The same determination was performed on a sample of the sodium bisulfite used for collecting/stabilizing the aldehydes and a 1 μg/ml formaldehyde standard. Results were calculated and reported as total micrograms of formaldehyde equivalent in the sample. The minimum amounts of aldehydes that could be detected by this method were typically 1-3 μg total (as formaldehyde).

Data Reduction

In the field, the total volumetric emissions from a source were measured. The laboratory analysis provided composition data in the form of weight of individual specie per unit volume (i.e., μg/ml).

The volumetric measurements of ducted sources were made using EPA Method 1 as described in the Federal Register, Volume 36, Number 159, August 17, 1971. Standard conditions used in all calculations were 60 °F and 29.95 in. of mercury pressure. Gas density correction factors were based on Chapter 3 of the "Source Testing Manual" published by the Air Pollution Control District of Los Angeles County, 1972 (now SCAQMD Metro Division).

Combustion source flow rates were measured by Method 1 and checked using Orsat analysis and combustion calculations based on fuel analysis and process data pertaining to the source tested. The method used is described in detail in Section 5.4 of the "Source Testing Manual".

The reported hydrocarbon concentrations were calculated from the laboratory results as follows:

The hydrocarbon concentration provided by the laboratory was on a dry, CO_2-free basis. This was converted to actual moisture and CO_2 conditions at the source by the relation (page B of Table 3-7),

$$c_{HC} = (c_{HC})_d \frac{(100 - W.V. - CO_2)}{100}$$

where,

c_{HC} = concentration of hydrocarbons at source (actual) conditions, parts per million by volume

$(c_{HC})_d$ = concentration of hydrocarbons; dry, CO_2-free basis, from the analysis; parts per million by volume

W.V. = water vapor in source gases, percent by volume

CO_2 = carbon dioxide in source gases, stack conditions, percent by volume

The water vapor concentration was measured during the source test using an ice water impinger or Aquasorb tube. The carbon dioxide concentration was obtained from Orsat analysis (dry basis), converting to stack conditions by multiplying by the factor (1-M.W./100).

The reported emission rate of hydrocarbons was calculated by the general relation,

$$M_{HC} = 1.58 \times 10^{-7} \, c_{HC} Q (M.W.)_{HC}$$

where,

M_{HC} = emission rate of hydrocarbons, pounds per hour

Q = stack gas flow rate, standard cubic feet per minute (SCFM)

$(M.W.)_{HC}$ = molecular weight of hydrocarbon

The 1.58×10^{-7} factor came from the following unit analysis:

$$M_{HC} \left(\frac{lb}{hr}\right) = c_{HC}(ppm) \times \left(\frac{ppm}{10^6}\right) \times Q \left(\frac{ft^3}{MW}\right) \left(\frac{60 \text{ min}}{hr}\right) \times (M.W.)_{HC} \left(\frac{lb}{mole}\right) \left(\frac{1 \text{ mole}}{379 \text{ ft}^3}\right)$$

$$M_{HC} \left(\frac{lb}{hr}\right) = c_{HC} \, Q \, (M.W.)_{HC} \, [(1/10^6) \times (60/379) \times (lb/hr)]$$

$$= 1.58 \times 10^{-7} \, c_{HC} \, Q \, (M.W.)_{HC} \quad (lb/hr)$$

QUALITY CONTROL

A comprehensive quality control program was conducted as an integral part of the overall organic-emission field tests. The program featured:

1. Calibration of field test instruments with ASTM methods and NBS standards
2. Frequent response-factor calibration of laboratory instruments
3. Interlaboratory checks for accuracy

4. Concurrent samples taken from the same source with separate but identical trains for precision checks
5. Separate total organic content analysis to backup the GC analysis
6. Unannounced "blanks" of zero gas, calibration gas, etc.
7. An independent QC consulting team.

From the outset KVB engaged the services of three experts in the field of organic analysis, Drs. James N. Pitts, Jr., Daniel Grosjean and Barbara Finlaysen-Pitts working as a team from EcoScience Systems Inc. (ESS). This team participated in the initial evaluation of the sampling equipment and analytical methodology and defined a quality program with the above mentioned features. The special QC tests (duplicates, blanks, round robins, etc.) accounted for approximately 10% of the test budget and afforded an excellent assessment of measurement error which was as follows:

1. The total hydrocarbon emissions were good to within $\pm$ 25%.
2. Values for the emissions of individual hydrocarbons, however, were less certain than that for total hydrocarbons.
3. The sum of the errors in sampling and analyses for individual alkanes probably was in the range of 25-50%.
4. The concentrations of oxygenates, aromatics and halogenates must be considered lower limits only with the possible error being a factor of three or more.

In addition to the above numerical assessment ESS concluded, "In summary then, the most feasible and reliable field sampling and laboratory analytical techniques were employed in this program to yield accurate source emissions data. The latter can be confidently applied to the development of a hydrocarbon emission inventory for stationary sources in the SCAB with 'state-of-the-art' accuracy and precision."

The ESS report is presented in the Appendix. Their report contains not only a discussion of selected data which lead to the above numerical error assessment but copies of comparative test data calibration data report forms documenting blank sample analyses results, etc.

Presented below are some selected data which illustrate the basis of the conclusions reached by ESS.

Round Robin and Sample Recovery Tests

Before beginning the field tests an analytical program was conducted to establish assurance in sampling and analysis for stationary pollution source studies. This included an evaluation of field sampling equipment, laboratory gas sampling, instrument variability, standardization of gas chromatographic analysis columns, accuracy and precision of data. To test these parameters, four calibration gases were procured in "K" bottles from Precision Gas Products, Inc. including selected (1) aliphatic hydrocarbons, (2) aromatic hydrocarbons, (3) oxygenated organics and (4) halogenated organic compounds. Concentrations were specified and controlled by the KVB program manager who retained certifications until analyses were performed.

Upon receipt of the four "K" bottles, three sets of samples were prepared in 250 ml gas collection bottles by KVB and delivered to ARLI, the SCAPCD laboratory in Los Angeles and the ARB laboratory in El Monte. (Only the aliphatic and aromatic samples were sent to the ARB.) The results of these analyses are presented in Tables II-6 through II-9. Added to each standard as a control compound was hexane selected because of its unreactive nature and low adsorptivity.

Two of the sampling trains shown in Figure II-1 were used to collect samples of the four calibration gases using the setup shown in Figure II-9. Results of the analyses of these samples are compared to other analyses of these calibration gases using various handling and analysis methods are presented in Tables II-10 through II-13 and discussed below.

Recovery studies using the aliphatic hydrocarbon standard indicated some limitations in sampling or analysis. For example, when the collection train was used as shown in Case 5 of Table II-10 32 liters of gas at the selected flow rate of 3 liter/minute showed a breakthrough of low molecular weight hydrocarbons on charcoal. This, of course, did not affect sample collection because the intended use of the adsorbents were for compounds

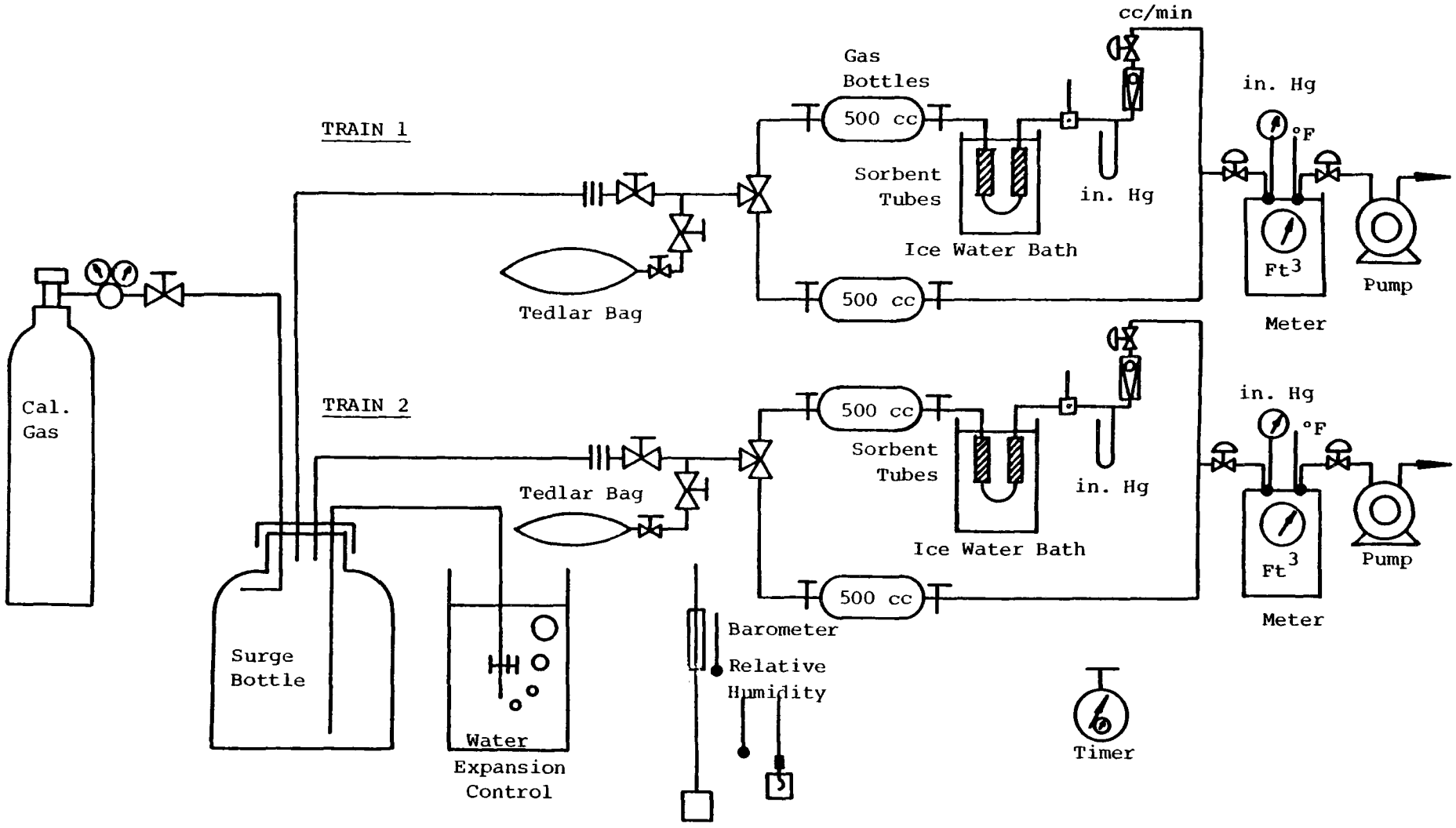

Figure II-9. Sampling trains in QC test with calibration gas.

KVB 26200-795

TABLE II-6. QUALITY ASSURANCE ALIPHATIC STANDARD

All data are reported in ppm in nitrogen.

Compound	Certified Contents*	Analytical Results		
		ARLI	SCAPCD	CARB
Ethylene	51	50	21	D[§]
Propane	53	47	27	32
Propylene	53	57	32	30
1,3-Butadiene	51	3[#]	28[+]	28
Isobutane	NR	NR[‡]	NR	0.4
Hexane	50	50	30	40
Heptane	51	46	24	D
Isooctane	50	43	26	D

*Analytical information prepared by Precision Gas Products Co.

[+] Identified as 1-butene

[§]D = Identified but not quantified (insufficient sample)

[#]The ARLI recovery of butadiene was significantly below the certified composition. This was apparently caused during thermal desorption treatment of the sample bottle and transfer equipment. SCAPCD and CARB labs are believed not to have heated the sample bottles.

[‡]NR = not reported

TABLE II-7. QUALITY ASSURANCE AROMATIC STANDARD

All data reported in ppm in nitrogen.

Compound	Certified Contents	Analytical Results		
		ARLI	SCAPCD	CARB
Benzene	52	50	15	34
Toluene	48	46	11	34
Ethylbenzene	49	51	5	20
Chlorobenzene	50	51	3	NR
Hexane	49	50	20	35
Xylene	NR	NR	3	D

NR = Not reported D = detected but not quantified

TABLE II-8. QUALITY ASSURANCE HALOGENATED HYDROCARBON STANDARD

All data reported in ppm in nitrogen.

Compound	Certified Contents	Analytical Results	
		ARLI	SCAPCD
Freon 113	48	47	22
Hexane	50	50	5
Methyl Chloride	55	48	NR
1,1,1 Trichloroethane (Methyl chloroform)	50	46	37
Chloroform	49	46	49

NR - Not reported

TABLE II-9. QUALITY ASSURANCE OXYGENATED ORGANICS STANDARD

All data reported in ppm in nitrogen.

Compound	Certified Contents	Analytical Results	
		ARLI	SCAPCD
Methanol	53	4	NR
Acetone	52	43	7
Isopropanol	NR	NR	9
Methyl Ethyl Ketone (2-Butanone)	51	45	2
Methyl Isobutyl Ketone	48	42*	20
Hexane	48	50	37

* Identified as 2-hexanone

TABLE II-10. RECOVERY STUDIES USING THE ALIPHATIC STANDARD

Analysis by Gas Chromatography - Porapak Q Column Temperature Programmed
Reported as ppm of Component in Nitrogen

Compound	Case 1	Case 2	Case 3	Case 4			Case 5		
					Charcoal Tube			Charcoal Tube	
				Grab	Front	Back	Grab	Front	Back
Ethylene	51	50	46	33	0	0	29	0	0
Propane	53	47	47	37	14	0	32	12	8
Propene	53	57	48	30	14	0	27	10	9
1,3-Butadiene	51	3	33	8	25	0	8	24	(0.2)
n-Hexane	50	50	49	35	46	0	33	35	1
n-Heptane	51	46	49	36	43	0	36	44	0
Isooctane (2 Methyl Heptane)	50	43	45	34	43	0	32	45	0
Total Recovery	359	296	317	213	185		197	198	

Case 1. Certified contents - gravimetrically prepared.

Case 2. Glass-Teflon grab sample, GC analyzed on receipt; sample bottle and transfer lines heated during sampling and analysis.

Case 3. Glass-Teflon grab sample - sampled and analyzed without heating during transfer process.

Case 4. Glass-Teflon grab sample and activated carbon sorption tube using field sampling train - first test. 27.7 liters of standard gas sampled.

Case 5. Same sampling conditions as for Case 4 - second test. 32 liters of standard gas sampled.

TABLE II-11. RECOVERY STUDIES USING THE AROMATIC STANDARD

Analysis by Gas Chromatography - Porapac Q Column Temperature Programmed
Reported as ppm of Component in Nitrogen

Compound	Case 1	Case 2	Case 3	Case 4		Case 5	
				Grab	Charcoal Tube	Grab	Charcoal Tube
n-Hexane	49	50	40	43	45 ± 2	44	45 ± 3
Benzene	52	50	43	47	45 ± 2	47	46 ± 4
Toluene	48	46	26	28	45 ± 1	23	47 ± 3
Ethylbenzene	49	51	23	25	46 ± 1	20	49 ± 3
Chlorobenzene	50	51	45	48	37 ± 1	46	39 ± 3
Total Recovery	248	248	177	191	218 ± 2	180	226 ± 3

Case 1. Certified contents - gravimetrically prepared.

Case 2. Glass-Teflon grab sample, GC analyzed on receipt; sample bottle and transfer lines heated during sampling and analysis.

Case 3. Glass-Teflon grab sample - sampled and analyzed without heating during transfer process.

Case 4. Glass-Teflon grab sample and activated carbon sorption tube using field sampling train - first test. 30 liters of standard gas sampled.

Case 5. Same sampling conditions as for Case 4 - second test. 28 liters of standard gas sampled.

TABLE II-12. RECOVERY STUDIES USING THE HALOCARBON STANDARD

Analyzed by Gas Chromatography - Porapak Q Column Temperature Programmed
Reported as ppm of Component in Nitrogen

Compound	Case 1	Case 2	Case 3		Case 4		Case 5
			Grab	Charcoal Tube	Grab	Charcoal Tube	
Hexane	50	50	44	33	40	38	49 ± 3
Methylene chloride	55	48	<0.1*	<0.1	<0.1	<0.1	50 ± 3
Chloroform	49	46	15	28	19	31	33 ± 1
Methylchloroform (1,1,1-Trichloroethane)	50	46	<1	30	<1	34	41 ± 2
Freon 113 (1,1,2-Trichloro-2,2,1-Trifluoroethane)	48	47	37	21	34	28	33 ± 3
Total Recovery	252	237		112		131	206 ± 3

*$MeCL_2$ masked by solvent.

Case 1. Certified contents - gravimetrically prepared.

Case 2. Glass-Teflon grab sample analyzed on receipt of standard sample bottle and transfer lines heated during sampling and analysis.

Case 3. Glass-Teflon grab sample and activated carbon sorption tube using field sampling train - first test. 24 liters of standard gas sampled.

Case 4. Same as Case 3, second test. 28 liters of standard gas sampled.

Case 5. Glass-Teflon grab sample analyzed approximately 45 days after sample receipt. Heated transfer lines and heated grab sample during analyses.

KVB 26200-795

TABLE II-13. RECOVERY STUDIES USING OXYGENATED ORGANICS STANDARD

Analysis by Gas Chromatography - Porapak Q Column Temperature Programmed
Reported as ppm of Component in Nitrogen

Compound	Case 1	Case 2	Case 3	Case 4		Case 5	
				Grab	Charcoal Tube	Grab	Charcoal Tube
Hexane	48	42	Recovery*	*	39	*	47
Methyl Alcohol	53	4	Less	*	<1	*	<1
Acetone	52	43	Than	*	25	*	28
Methyl Ethyl Ketone (2-Butanone)	51	45	ppm Level	*	39	*	47
Methyl Isobutyl Ketone	48	42		*	33	*	39
Total Recovery	252	176			136		161

*The oxygenated material could not be displaced from the sampling container without heating because of adsorption or moisture and absorption.

Case 1. Certified contents - gravimetrically prepared.

Case 2. Glass-Teflon grab sample analyzed by GC on receipt of standard mixture. All transfer lines and sampling system heated.

Case 3. Same as Case 2 without heating.

Case 4. Glass-Teflon grab sample and activated carbon sorption tube using field sampling train - first test. 28 liters of standard gas sampled.

Case 5. Same as Case 4, second test. 23.8 liters of standard gas sampled.

boiling above 80 °F. Low values reported for butadiene seemed to indicate polymerization or decomposition. The analytical data for Case 2 showed a recovery of only 3 ppm when the sampling container was heated to approximately 120 °F during transfer to the chromatograph. Case 3 of the gas sample was transferred to the GC loop without heating (33 ppm of butadiene was recovered). Because ARLI and the other referee laboratories found approximately 30 ppm of butadiene in all tests, it can be assumed that the gas phase of the Precision Gas Standard contains only this amount. Either wall adsorption or catalytic polymerization within the "K" bottle could explain the difference between the analyzed and gravimetrically prepared material. The accuracy observed for sorbent collected hydrocarbons above C_5 was within experimental error. It was also indicated that heating of the glass grab sample containers to 100 °F would maximize recovery of the lower hydrocarbons, $< C_4$.

Table II-11 shows the data obtained on the aromatic hydrocarbon gas standard sample. These data showed that accuracy could be achieved within the limitations of analytical repeatability. Warming the grab sample bottle of toluene and ethylbenzene appear to improve the yield. Unexplained retention of chlorobenzene on the charcoal was observed although 80% recoveries of higher molecular weight compounds are considered acceptable by most laboratories and government agencies. No corrections were made for hydrocarbon sampling to actual and projected stack emissions.

Table II-12 reflects the analytical studies made on halocarbon gas mixtures. These data are not consistent with the accuracy and reproducibility of the hydrocarbon data. It would appear that for the higher molecular weight halogenated materials, between 20 and 30% losses occurred simply on standing in the metal "K" bottle. Case 5 of Table II-12 illustrates this condition. The loss of methylene chloride in grab sampling appeared to be real although in ARLI's previous experience with analyzing for traces of methylene chloride there had been no problem. Methylene chloride elutes with carbon disulfide from a Porapak Q column. Therefore, no accurate measure of concentration could be made. The reported value of < 0.1 ppm appeared to be a small shoulder on the solvent peak and was probably an impurity in one or both of the compounds.

Table II-13 presents the results obtained for oxygenated organic materials. If it can be assumed that the amount of methyl alcohol found in the "K" bottle by analysis, restandardization, and reanalysis (as was actually performed in the laboratory) were correct, the recoveries were within 20%. Methyl ethyl ketone elutes with hexane from the Porapak Q column. However, from other recovery data, standards and grab samples of the Precision Gas mixture, and response factors applied to the measured area, the calculated concentration reported under Case 4 and 5 agree within the experimental limits.

The oxygenated materials were strongly adsorbed on the glass bottle walls. This was apparent in the data present for the grab-train samples of Case 4 and 5 as well as the ambient grab sample of Case 3. All field grab samples that were expected to contain oxygenated materials were warmed and the transfer lines maintained at an elevated temperature injection into the GC.

Interlaboratory Field Sample Analysis

During the test of the Huntington Beach oil field emissions WOGA used a consulting firm, RETA, to monitor KVB's procedures. RETA collected duplicate samples of gas in grab bottles which were analyzed by the Union Oil Research Laboratory in Brea, CA. A comparison of the KVB-ARLI results with those of RETA-Union are shown in Tables 3-20 through 3-25, Ref. II-6.

Although these samples were taken sequentially rather than simultaneously, the results in these tables show good agreement for total hydrocarbons as well as for the two major components methane and ethane. For example deviations from the mean methane concentration ranged from -28% to +10% the average deviation being 13%. The agreement was consistent over a range of concentrations from under 700 to over 800,000 ppm. The greatest discrepancies percentagewise were in the low concentration species. This latter phenomenon was generally observed throughout the QC program.

Redundant Field Samples

On selected sources two or three independent trains were inserted into the source for simultaneous sampling. The analyses of the samples were performed without informing the laboratory of identical nature of the sources. The results of some of these tests are presented in Tables 3-26 through 3-30, Ref. II-6.

SOLVENT USE QUESTIONNAIRES

Solvent use questionnaires were processed primarily to obtain information on the quantities and specific types of solvents used in the South Coast Air Basin during 1975 for use in developing emission profiles and factors. Other information on process equipment, control devices, future plans for modifications or expansion were also requested for checking the EIS data and forecasting emission trends.

KVB prepared the questionnaires using modified formats from Reference II-7. Sections were specifically directed to the following solvent users:

- Degreasing Operations
- Dry Cleaning Operations
- Protective and Decorative Coatings
- Fabric and Rubberized Coatings
- Miscellaneous Coatings
- Ovens
- Printing Operations

Data were requested on an individual device basis using actual process records or best estimates from total plant consumption. Provisions for confidential or proprietary information were made.

Individual questionnaires were mailed to approximately 200 plants within the Basin with reported total organic compound emissions from solvent use in excess of 25 tons per year. Only the questionnaire forms that would pertain to the individual source operation were included. The response to these questionnaires was only 25% despite follow-up by telephone.

Of those returned, the quality and completeness of the information as excellent providing detailed information on solvent composition and perating parameters previously not available. Data were obtained from a ide cross section of industries which added depth to the data base. These ata, along with updated solvent use patterns for those firms visited during he field test program have been incorporated into the development of the pplicable solvent emission profiles.

ITERATURE RESEARCH

Profile data not obtainable through field source tests or solvent use uestionnaires was derived through an extensive survey of pertinent literature. here appropriate, discretion was used by KVB engineers in their engineering valuation of these data. Numerous consultations were also conducted with uthors of reports, industry representatives and various government agencies n the development of profile data from the literature.

REFERENCES

II-1. Trijonis, J. C. and Arledge, K. W., "Utility of Reactivity Criteria in Organic Emissions Control Strategies. Application to the Los Angeles Atmosphere," EPA-600/3-76-091, August 1976.

II-2. Mueller, F. X. and J. A. Miller, "Determination of Organic Vapors in Industrial Atmospheres," Amer. Lab., 49-61, May 1964.

II-3. Levache, B. and S. M. MacAskill, "Analysis of Organic Solvents Taken on Charcoal Samplers," Anal. Chem., 48, (1), 76-78, 1976.

II-4. Nelson, G. O., et al., "Respiratory Cartridge Efficiency Statistics; VII. Effect of Relative Humidity and Temperature," Amer. Ind. Hyg. Assoc. J., 37, (5), 280-288, 1976.

II-5. Parkes, D. G., et al., "A Simple Gas Chromatographic Method for the Analysis of Trace Organics in Ambient Air," Amer. Ind. Hyg. Assoc. J. 37, (3), 165-173, 1976.

II-6. Taback, H. J., et al., "Control of Hydrocarbon Emissions from Stationary Sources in the California South Coast Air Basin," Vol. I and II, KVB, Inc., Tustin, CA, June 1978.

II-7. DiGasbarro, P. and Bornstein, M., "Methodology for Inventorying Hydrocarbons," EPA-600/4-76-013, March 1976.

APPENDIX III

PROFILE CALCULATIONS DEVELOPMENT

APPENDIX III

SAMPLE PROFILE CALCULATION FOR CALCULATING AVERAGE MOLECULAR WEIGHT

Given the species in any compound, the average molecular weight may be calculated knowing the individual specie's molecular weight and weight percent.

EXAMPLE: KVB PROFILE 0001

GIVEN:

n-butane with molecular weight =	58.12 and	14.00 weight %
hexane	86.17	5.00
formaldehyde	30.03	42.00
acetone	58.08	28.00
methane	16.04	11.00

1. Determine the number of mols of each component by dividing the weight (assume the mixture weighs 100 units so that 14% = 14.00 weight units) by the molecular weight.

n-butane	= 14.00/58.12	=	0.241 mols
hexane	5.00/86.17		0.058
formaldehyde	42.00/30.03		1.399
acetone	28.00/58.08		0.482
methane	11.00/16.04		0.686

2. The total weight of the mixture is 2.866 mols.

3. Since volume % = mol %, the volume percent of each component is determined by dividing the total weight of the mixture into each component's number of mols, or

n-butane	= 0.241/2.866 x 100% =	8.41 vol.
hexane	0.058/2.866	2.02
formaldehyde	1.399/2.866	48.81
acetone	0.482/2.866	16.82
methane	0.686/2.866	23.94

4. The average molecular weight of the paraffins is the sum of the volume percent of each individual component's molecular weight in that class.

n-butane - (8.41/8.41 + 2.02)(58.12)	= 46.86
hexane - (2.02/8.41 + 2.02)(86.17)	= 16.69
2 compounds of Class 1	63.55

5. The average molecular weight of the compound composite is the sum of the volume percent of each individual component's molecular weight in the compound.

n-butane	58.12 (0.0841) =	4.89
hexane	86.17 (0.0202) =	1.74
formaldehyde	30.03 (0.4881) =	14.66
acetone	58.08 (0.1682) =	9.77
methane	16.04 (0.2394) =	3.84
5 compound composite III-2		34.90

TECHNICAL REPORT DATA
(Please read Instructions on the reverse before completing)

1. REPORT NO. EPA-450/3-78-119	2.	3. RECIPIENT'S ACCESSION NO.
4. TITLE AND SUBTITLE Volatile Organic Compound (VOC) Species Data Manual		5. REPORT DATE December 1978
		6. PERFORMING ORGANIZATION CODE
7. AUTHOR(S) Harry W. Bucon, Joseph F. Macko, Harold J. Taback		8. PERFORMING ORGANIZATION REPORT NO.
9. PERFORMING ORGANIZATION NAME AND ADDRESS KVB Engineering, Inc. 17332 Irvine Blvd. Tustin, California 92680		10. PROGRAM ELEMENT NO. 2AA635
		11. CONTRACT/GRANT NO. 68-02-3029
12. SPONSORING AGENCY NAME AND ADDRESS U.S. Environmental Protection Agency Monitoring and Data Analysis Division Office of Air Quality Planning and Standards Research Triangle Park, NC 27711		13. TYPE OF REPORT AND PERIOD COVERED
		14. SPONSORING AGENCY CODE

15. SUPPLEMENTARY NOTES

EPA Project Officer: Frank M. Noonan

16. ABSTRACT

This manual contains tables of potential emissions of organic compounds for selected source categories. The species profile table format has been organized to be particularly useful in preparation of emission inventory inputs to photochemical modeling. Accompanying each VOC profile table is a brief narrative that describes process, emissions, controls and basis of source report and data quantification. The chemical classifications include paraffin, olefin, aromatic, carbonyl (aldehydes and ketones), methane, non-reactive other than methane, and miscellaneous. Data confidence levels for each profile table have been assigned. Reference lists for reports, published data and names and titles of personal contacts are provided for each source category.

17. KEY WORDS AND DOCUMENT ANALYSIS

a. DESCRIPTORS	b. IDENTIFIERS/OPEN ENDED TERMS	c. COSATI Field/Group
Volatile Organic Compounds (VOC) Chemical Species Distribution Emission Inventories (Air) Photochemical Model Input Stationary Sources Mobile Sources		

18. DISTRIBUTION STATEMENT Unlimited	19. SECURITY CLASS *(This Report)* Unclassified	21. NO. OF PAGES 260
	20. SECURITY CLASS *(This page)* Unclassified	22. PRICE

EPA Form 2220-1 (9-73)

☆U.S. GOVERNMENT PRINTING OFFICE: 1979-640-013/4234 REGION NO. 4