APPENDIX B

LASER TOUCH MODEL LT-B512 DESIGN SCHEMATICS

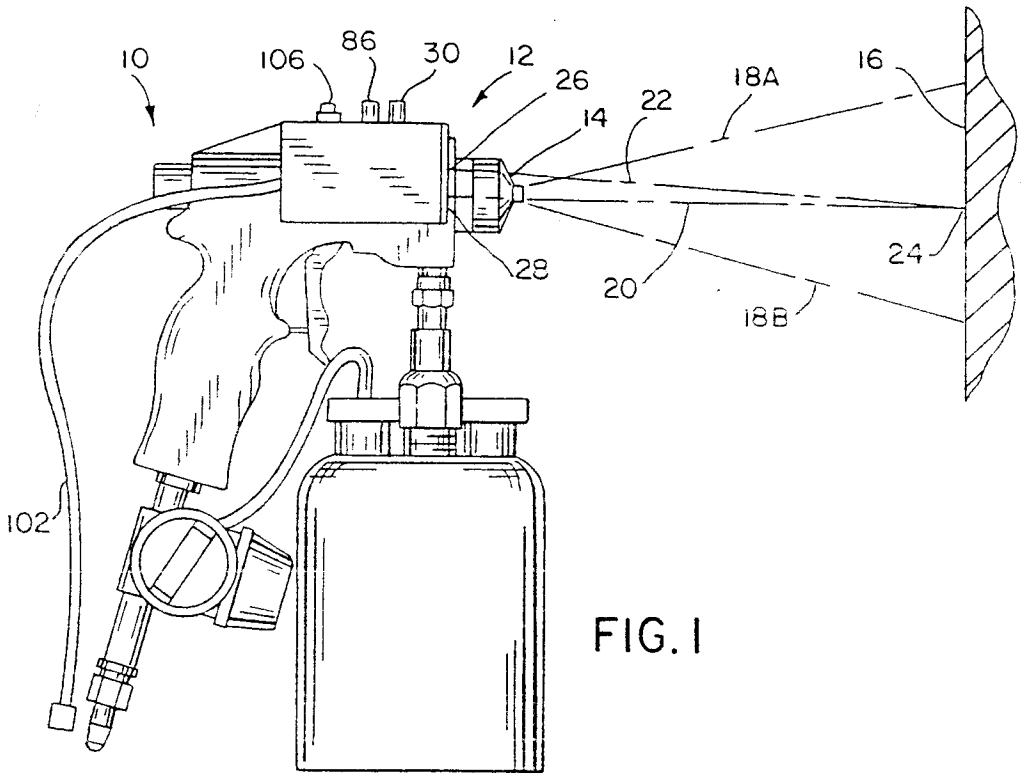
10
106
86
30
12
26
14
22
18A
16
24
28
20
18B
102

FIG. 1

FIG. 2

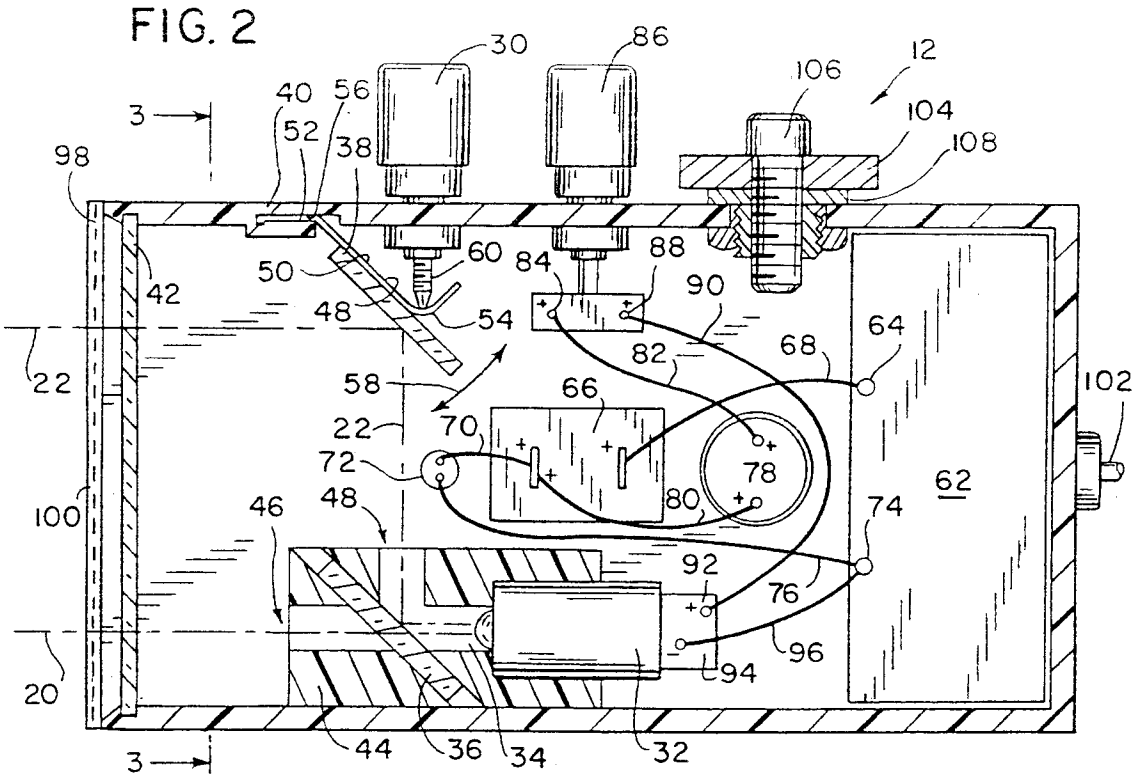
30
86
12
106
104
108
3
40
56
52
38
98
42
50
60
84
88
90
48
54
64
68
82
22
58
66
102
22
70
72
78
62
100
46
48
80
74
92
76
96
20
94
44
36
34
32
3

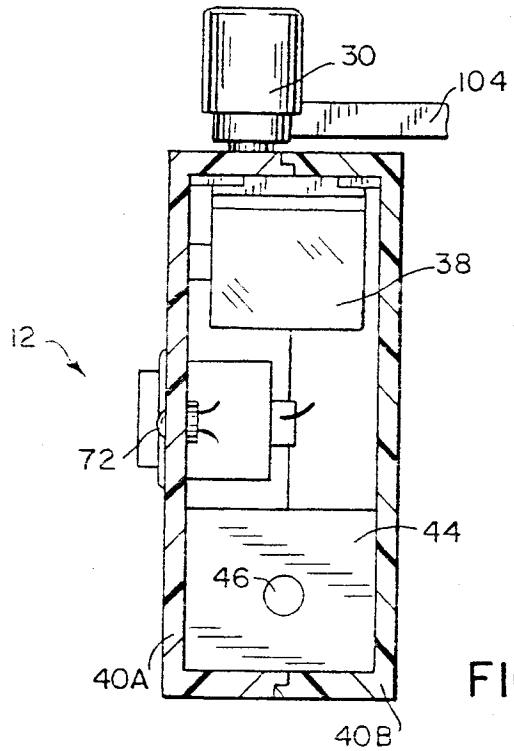

FIG. 3

FIG. 4

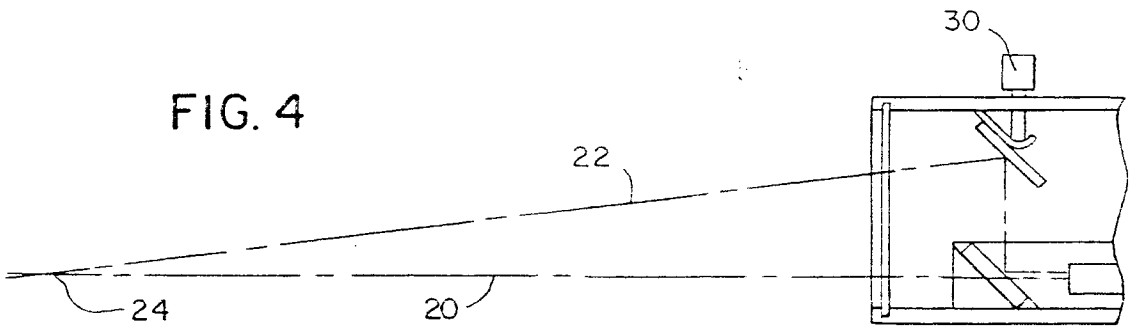

FIG. 5

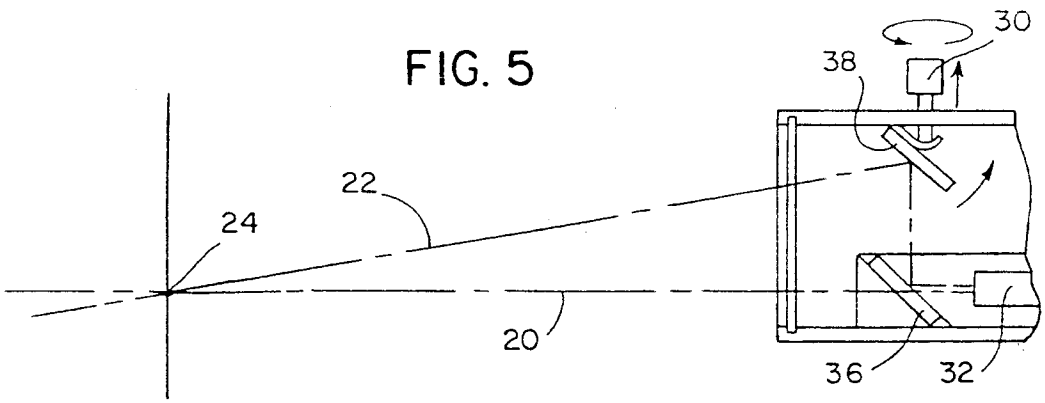

path.
red