GranBio-Modified GREET Pathway for the Production of Ethanol from Sugarcane Straw

Prepared by Jennifer Pont, Stefan Unnasch, Life Cycle Associates, LLC
Date: July 28, 2014

Pathway Summary

This lifecycle analysis calculates the carbon intensity (CI) of cellulosic ethanol at GranBio's new plant in Alagoas, Brazil. The state of Alagoas, shown in Figure 1, is located in the northeast region of the country. GranBio's BioFlex plant is located next to a first generation (1G) sugar mill and will utilize sugarcane straw as a feedstock for cellulosic ethanol production.

Raphael Lorenzeto de Abreu, Wikimedia commons

Figure 1. Location of Alagoas State in Brazil.

The sugarcane straw pathway system boundary diagram is shown in Figure 2. Sugarcane straw is collected from local fields and trucked on average 20 km (12 miles) to the plant. Ethanol is produced via hydrolysis and subsequent fermentation. The lignin byproduct is combusted on-site along with additional bagasse from the neighboring sugar refinery to provide all of the steam and electricity needs of both the BioFlex cellulosic ethanol plant and the 1G ethanol/sugar refinery. Excess power is exported to the local electricity grid. Vinasse from the ethanol plant and boiler ash are applied to the sugarcane fields, reducing fertilizer consumption. Ethanol is trucked 37 miles to the Port of Maceio and shipped to California by ocean tanker.

 Copyright © 2014 Life Cycle Associates, LLC

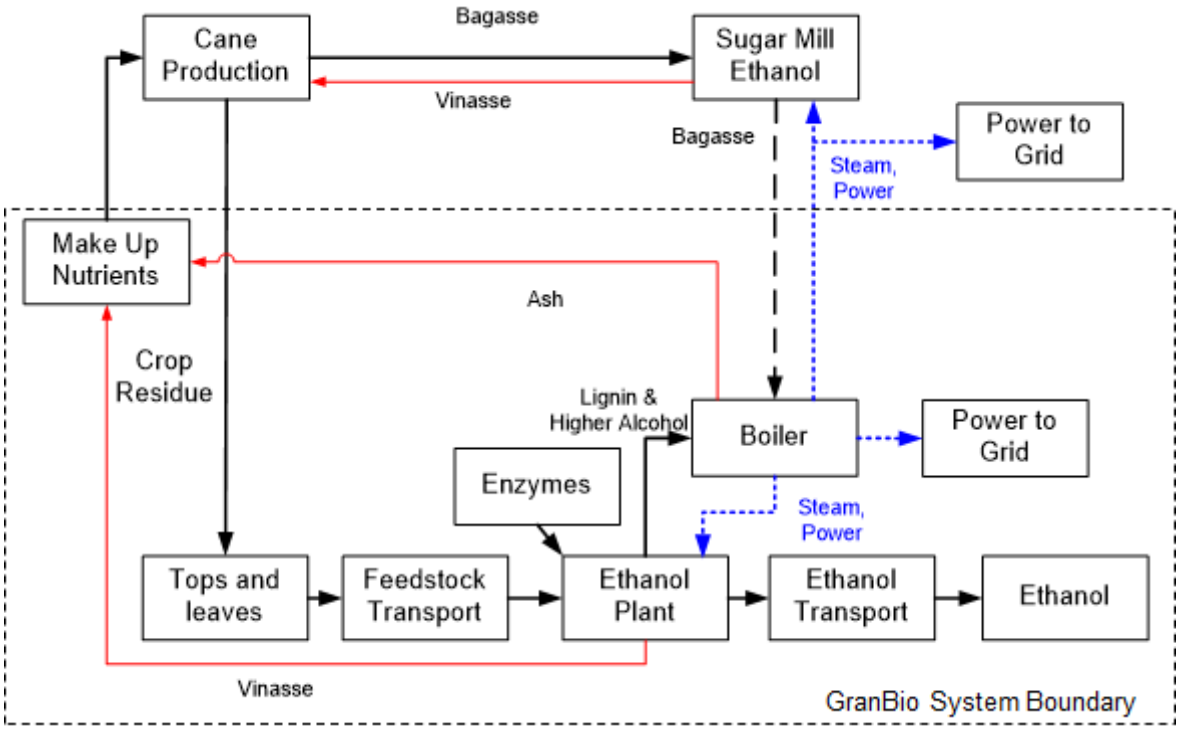

Figure 2. Sugarcane Straw Ethanol System Boundary Diagram.

A version of the Greenhouse gases, Regulated Emissions, and Energy use in Transportation (GREET)[1] model developed by Argonne National Laboratory was used to calculate the energy use and greenhouse gas (GHG) emissions generated during the entire fuel life cycle, from feedstock recovery to ethanol production and vehicle use. Life Cycle Associates and ARB staff modified the original GREET model to create a California-specific version known as the CA_GREET model.[2] Changes included adding California-specific input factors (emission factors, electrical energy generation mix, transportation distances, etc.); no changes were made to the methodology inherent in the original GREET model.

Table 1 summarizes the GHG emissions from each stage of GranBio's ethanol production process. The carbon intensity of the straw-to-ethanol pathway with denaturant is 6.98 g CO_2e/MJ. In quantifying life cycle emissions for this pathway, the alternate fate of the feedstock has been considered. Sugarcane straw is an ideal feedstock for cellulosic fuel production because it is a residue and would not have otherwise been utilized. Its removal is considered sustainable; please refer to Appendix A for information regarding the sustainability of sugarcane straw collection and removal.

[1] Argonne National Laboratory (2008). The Greenhouse Gases, Regulated Emissions, and Energy Use in Transportation (GREET) Model. http://greet.es.anl.gov/main

[2] ARB (2009) Lifecycle Analysis (CA_GREET): http://www.arb.ca.gov/fuels/lcfs/lcfs.htm

 Copyright © 2014 Life Cycle Associates, LLC

Table 1. Summary of Well-To-Wheel Emissions for Straw to Ethanol

Disaggregated Item	Sugarcane Straw Ethanol ($g\ CO_2e/MJ$)
Well-to-Tank (WTT) GHG Emissions	
Feedstock Collection	2.81
Net Farming Inputs	3.91
Feedstock Transport	0.42
Ethanol Production	1.81
Fermentation Chemicals	14.97
Ethanol Transport and Distribution	3.37
Total WTT GHG Emissions	27.28
Emission Credits	
Electricity Export Credit	-21.09
Net WTT GHG Emissions	6.18
Denaturant	0.80
WTW GHG Emissions (Denatured)	**6.98**

Calculation of Carbon Intensity

GranBio provided the process flow data in Table 2 for the sugarcane straw pathway. These values were subsequently converted into "GREET units", which are provided in Table 3. The CA_GREET input sheet for this pathway is provided in Tables 12 and 13 at the end of this report. The following sections provide calculation details for each step of the GranBio pathway.

Table 2. GranBio Ethanol Process Inputs, Given Units

Item	Units	Value
Annual operating hours	hour/yr	[redacted]
Ethanol production	tonne/hr	[redacted]
Feedstock consumption	tonne/hr	[redacted]
Feedstock moisture content	% H_2O	10.9%
Straw Collection Diesel Use	liters/wet tonne	4.05
Enzyme product use	kg/tonne ethanol	[redacted]
Yeast consumption	kg/tonne ethanol	[redacted]
[redacted]	kg/tonne ethanol	[redacted]
[redacted]	kg/tonne ethanol	[redacted]
[redacted]	kg/tonne ethanol	[redacted]
Vinasse production	tonne/hr	[redacted]
Lignin yield	tonne/hr @ 44% moisture	[redacted]
Lignin LHV	Btu/dry tonne	16,972,983

Copyright © 2014 Life Cycle Associates, LLC

Table 3. Key GranBio Ethanol Process Inputs, GREET Units

Item	Units	Value
Ethanol Yield	gal/dry ton	[redacted]
Lignin LHV (GREET1_2013)	Btu/ton, dry	14,540,446
Straw Collection Diesel Use	Btu/ton, dry	139,964
Yeast consumption	Ton yeast/ton dry feedstock	[redacted]
Enzyme product consumption	Ton product/ton dry feedstock	[redacted]
[redacted]	Ton/ton dry feedstock	[redacted]
[redacted]	Ton/ton dry feedstock	[redacted]
[redacted]	Ton/ton dry feedstock	[redacted]
Straw Pathway Electricity Credit	kWh/gal	-2.98

1. Feedstock Collection

The sugarcane straw collection emissions stem from tractors utilizing diesel fuel. Receipts for fuel consumption and corresponding straw collection for January 9, 2013 through April 28, 2014 were provided by GranBio and are included in Appendix D. The receipts indicate that 583,706 liters of diesel were consumed to collect 144,101 wet tonnes of straw. This results in a fuel consumption rate of 139,964 Btu/dry ton of straw.

Table 4. Straw Collection Diesel Consumption.

	Liters per hectare	Liters per wet tonne
Total diesel consumed	583,706	liters
Total straw collected	144,101	wet tonnes
Collection energy	4.05	liters/wet tonne
Collection energy	4.55	liters/dry tonne
Collection energy	139,964	Btu/dry ton

2. Field and Fertilizer Emissions

The straw pathway impacts sugarcane field emissions in a variety of ways:

- Reduced field burning of straw
- Reduced field N_2O emissions due to straw removal
- Replacement of straw nitrogen (N), phosphorus (P) and potassium (K) removed
- Reduced fertilizer application due to vinasse application to field
- Reduced fertilizer application due to boiler ash application to the field

Table 5 summarizes the fertilizer impacts. Quantification of the GHG impacts for each of these effects is described in detail below.

Copyright © 2014 Life Cycle Associates, LLC

Table 5. Sugarcane Field Fertilizer Impacts of GranBio Straw Pathway

Scenario	Action	N Impact	P and K Impact
Typical Field Management in Alagoas	84% field burning at 90% combustion efficiency	• 76% of the nitrogen is liberated to N_2, NO_x and N_2O in field burning. • 24% stays on the field and contributes to field N_2O emissions	Assume the P and K survive field burning, all P and K in straw stays on field.
GranBio Straw Pathway	Mechanized harvesting, Straw removed from field	• Reduced field N_2O emissions for 24% of straw (portion that does not burn). • Replace 24% of the N that would have remained on the field after burning.	Replace P and K for 100% of the straw removed
	Vinasse returned to the field	Reduced N use equivalent to N content of vinasse applied to field.	Reduced P and K use equivalent to P and K content of vinasse.
	Boiler ash returned to the field	All N in the lignin is assumed liberated to N_2, NO_x or N_2O in boiler combustion. No N in ash.	Reduced P and K use equivalent to P and K content in boiler ash.

Reduced Field Burning
ARB will not allow a credit for 84% field mechanization.

Reduced N_2O Field Emissions
As mentioned above, this analysis assumes that the straw would otherwise have been harvested and left in the field. Therefore, under normal circumstances, 100 percent of the straw nitrogen would remain and be available to emit from the field in the form of N_2O due to nitrification-denitrification. Since GranBio removes straw from the field, it receives a credit for 100 percent of the straw not directly emitting N_2O from the field. The CA-GREET default of 1.25% of the straw N as N_2O per unit straw N content is utilized.

Fertilizer Replacement to Compensate for Straw Removal
GranBio's straw pathway must also take into account the additional fertilizer application required to replace the nutrients removed with the straw. All of the straw's nitrogen, potassium and phosphorus must be replaced. In addition, GREET1_2013 requires 10% additional nitrogen to be added to make up for nitrogen volatilization. One key input needed to calculate the amount of makeup fertilizer is the straw nutrient content. The GREET1_2013 values have been utilized in this analysis (3357 gN/dry ton, 635 g P2O5/dry ton and 13,608 g K2O/dry ton). The upstream emission estimates in GREET1_2013 for fertilizer produced in Brazil are utilized to calculate lifecycle emissions rather than the CA-GREET U.S. average fertilizer emission data. However, the fertilizer transport assumptions have been adjusted to account for local production and delivery by truck (34 miles) to the plant.

Vinasse Application to the Fields
The existing sugarcane ethanol pathway includes the effect of returning vinasse to the fields on agricultural chemical use in sugarcane fields. The vinasse produced during ethanol production from straw is additional to the amount of vinasse produced in 1G sugarcane ethanol production, and therefore further reduces sugarcane field agricultural chemical use. Vinasse contains nitrate, ammonium, phosphate, and potassium and is applied to the fields as a fertilizer replacement. Table 7 provides the concentrations of these nutrients in the vinasse.

Copyright © 2014 Life Cycle Associates, LLC

Table 6. Vinasse Nutrient Content provided by GranBio.

	Units	Value
Nitrate Content	% wt as NO_3^-	[redacted]
Ammonium Content	% wt as NH_4^+	[redacted]
Calculated Nitrogen Content	% wt as N	[redacted]
Phosphate Content	% wt as PO_4	[redacted]
Calculated P_2O_5 Content	% wt as P_2O_5	[redacted]
Potassium Content	% wt as K	[redacted]
Calculated K_2O Content	% wt as K_2O	[redacted]

The vinasse production rate provided by GranBio is [redacted] tonne/hr, which translates to [redacted] grams per dry ton of biomass feedstock. Table 8 provides the fertilizer displacement rates due to vinasse application utilized in CA-GREET. The nitrogen is split among the ammonia, urea and ammonium nitrate according to CA-GREET splits for sugarcane fields (70.7% ammonia, 21.1% urea, and the balance ammonium nitrate). The upstream emission estimates in GREET1_2013 for fertilizer produced in Brazil are utilized to calculate lifecycle emission credit rather than the CA-GREET U.S. average fertilizer emission data. The transport distances have been modified to reflect delivery by truck 34 miles from a local fertilizer plant.

Table 7. Fertilizer Displacement Due to Field Application of Vinasse

	Units	Value
Total Nitrogen	g/dry ton straw as N	209.9
Ammonia	g/dry ton straw as N	148.4
Urea	g/dry ton straw as N	44.3
Ammonium Nitrate	g/dry ton straw as N	17.2
Phosphorus	g/dry ton straw as P_2O_5	158
Potassium	g/dry ton straw as K_2O	5,130

The vinasse is transported 12 miles back to the field in tanker trucks. To quantify the emissions, the GREET1_2013 lifecycle data for ethanol transport 12 miles (24 miles roundtrip) in Brazil was converted from a per MMBtu ethanol basis to a per ton basis. The truck energy and emissions values per ton were multiplied by the vinasse production rate per ton of straw to arrive at energy and emissions on a per ton of straw basis.

Boiler Ash Application to the Fields

The lignin co-product is burned in a boiler to make steam and electricity. The resulting ash contains potassium and phosphorus and is returned to the sugarcane fields, reducing potassium and phosphorus fertilizer application. LCA understands the existing carbon intensity value for 1G sugarcane ethanol includes the effect of returning bagasse boiler ash to the fields. However, since the ash produced from burning straw lignin is additional to the ash produced during 1G bagasse combustion, the reduction in fertilizer application rates is additional to existing levels. It is assumed that none of the nitrogen bound in the lignin partitions to the boiler ash, and all of the potassium and phosphorus in the feed goes to either the vinasse or boiler ash. Thus, the boiler ash potassium and phosphorus content is the feedstock content less the vinasse content. Table 9 provides the amount of fertilizer displaced due to boiler ash returned to the field.

Copyright © 2014 Life Cycle Associates, LLC

Table 8. Fertilizer Displacement Due to Field Application of Boiler Ash

	Units	Straw Pathway
Phosphorus	g/dry ton straw as P_2O_5	477
Potassium	g/dry ton straw as K_2O	8,478

It is assumed that the ash is transported 12 miles (24 miles roundtrip) back to the fields in a medium duty truck with an 8 ton capacity. CA-GREET life cycle data for a medium duty truck were utilized.

3. Feedstock Transport

The energy inputs for straw transport are based on transport distance and truck capacity. GranBio provided the truck capacity of 35 tonnes (39 tons), however ARB is limiting the track capacity to 33.5 short tons. The average distance for hauling straw to the plant is 12 miles (24 miles roundtrip). The straw moisture content is 10.9 percent. We have assumed a 2% feedstock loss along the road, consistent with GREET1_2013.

In addition, prior to transport, the straw piles are covered with plastic to prevent losses. The GREET1_2013 model assumes that HDPE is used at a rate of 1.86 kg/dry tonne to cover corn stover bales. The HDPE lifetime is assumed to be 5 years, so 0.372 kg HDPE per dry tonne is utilized each year. This is combined with the GREET1_2013 HDPE emissions data, to estimate lifecycle emissions associated with HDPE use.

4. Ethanol Production

The GranBio plant produces ethanol through hydrolysis and fermentation. No natural gas or grid electricity is consumed at the plant. The ethanol yield is [redacted] gal/dry ton. Fermentation chemical use provided above in Tables 2 and 3 is also shown in Table 10. The nitric acid consumption rate is [redacted] while the amylase consumption rate [redacted] the GREET1 default value. GREET1 does not include [redacted] consumption. The GREET life cycle emissions data are on the basis of weight percent enzyme product; enzyme product contains approximately 20 percent enzyme protein. Life cycle emission data for each of the fermentation chemicals utilized are taken from GREET1_2013.

Table 9. Fermentation Chemical Use

Product	Units	Value	GREET1 Default
Cellulase	tons/dry ton feedstock	[redacted]	0.01
Yeast	tons/dry ton feedstock	[redacted]	0.0025
[redacted]	tons/dry ton feedstock	[redacted]	0.0045
[redacted]	tons/dry ton feedstock	[redacted]	44.33
[redacted]	tons/dry ton feedstock	[redacted]	09.97

Copyright © 2014 Life Cycle Associates, LLC

The [redacted] are all sourced locally in Brazil from [redacted]. These products are transported 34 miles by truck. The dry yeast is sourced from the Netherlands. GREET1_2013 was utilized to determine emissions for 5,000 miles of cargo ship transport to [redacted], followed by 37 miles of truck transport to the plant.

[redacted]

[redacted]

[redacted]

[redacted]

5. SPE Power Plant

The GranBio ethanol plant produces ethanol and lignin. The neighboring 1G ethanol/sugar refinery produces sugar, ethanol and bagasse. SPE operates the boilers and turbines that generate steam and electricity for the two plants. Figure 3 illustrates the flows of bagasse and lignin to the two boilers and three turbines operated by SPE as well as the flows of the resulting electricity and steam produced. The objective of this analysis is to determine the share of the exported electricity that should be allocated to GranBio's BioFlex plant. All of the steam and electricity generated for use at the BioFlex plant is assumed to be derived from straw-lignin. Only excess electricity generated from straw lignin combustion is credited to the straw pathway.

Copyright © 2014 Life Cycle Associates, LLC

As can be seen in Figure 3, bagasse is fired in Boiler 1, with all steam consumed by the 1G plant. A mixture of bagasse and lignin are fired in the new lignin boiler. [redacted] of the steam produced in the lignin boiler flows to a backpressure turbine (BP turbine) with the balance routed to an extraction/condensate turbine (E/C turbine). All of the steam exiting the BP turbine is consumed by the 1G plant. All of the steam extracted from the E/C turbine is consumed by BioFlex. Because all of the steam from the BP turbine goes to the 1G plant, we have assumed for simplicity that all of the steam entering the BP turbine was generated with bagasse. Therefore, [redacted] of the total boiler heat input [redacted]MMBtu/yr) that generates the steam that flows to the BP turbine is assumed to be bagasse. The balance of the steam flows to the E/C turbine, generated with [redacted]MMBtu/yr of bagasse and [redacted] MMBtu/yr of lignin.

Figure 4 provides a detailed schematic of the flows in and out of the E/C turbine. Because all of the steam extracted from the E/C turbine goes to BioFlex, it is assumed that only straw lignin energy generates this steam (no bagasse). The straw-lignin energy required to produce steam for BioFlex is determined from the energy balance provided by GranBio. The energy balance indicates that the steam enthalpy [redacted]MJ/hr. The enthalpy of the feedwater [redacted] MJ/hr (from steam tables). Assuming [redacted] hours/year of operation, the energy absorbed by the feedwater in the boiler is [redacted] MMBtu/yr. With a boiler efficiency of [redacted]% (see Appendix E), the straw lignin energy required to supply BioFlex with steam is [redacted] MMBtu/yr. This value is subtracted from the total straw-lignin heat input value, leaving [redacted] MMBtu/yr of straw-lignin to produce electricity.

The E/C turbine generates a total [redacted] This is divided between bagasse and lignin by electricity energy input ([redacted]yr of lignin and [redacted]/yr of bagasse). The result is shown in Figure 4: [redacted]/yr from lignin and [redacted]/yr from bagasse. Some of the lignin generated electricity goes to the BioFlex plant ([redacted] MWh/yr), with the balance going to SPE use and the grid ([redacted] MWh/yr). The efficiency of the boiler-E/C turbine is ([redacted] + [redacted])/([redacted] + [redacted]) × 1000 = [redacted] Btu/kWh.

From Figure 3 we see that approximately [redacted] percent of the combined SPE and grid electricity is consumed by SPE: [redacted] / ([redacted]+[redacted]) = [redacted]%. We therefore assume that [redacted] percent of the remaining lignin electricity (after supplying BioFlex) goes to SPE and the balance is exported to the grid. Figure 4 indicates that [redacted] MWh/yr of lignin generated electricity is exported to the grid. This corresponds to 2.89 kWh/gal. The rest of the electricity exported to the grid comes from bagasse combustion.

Copyright © 2014 Life Cycle Associates, LLC

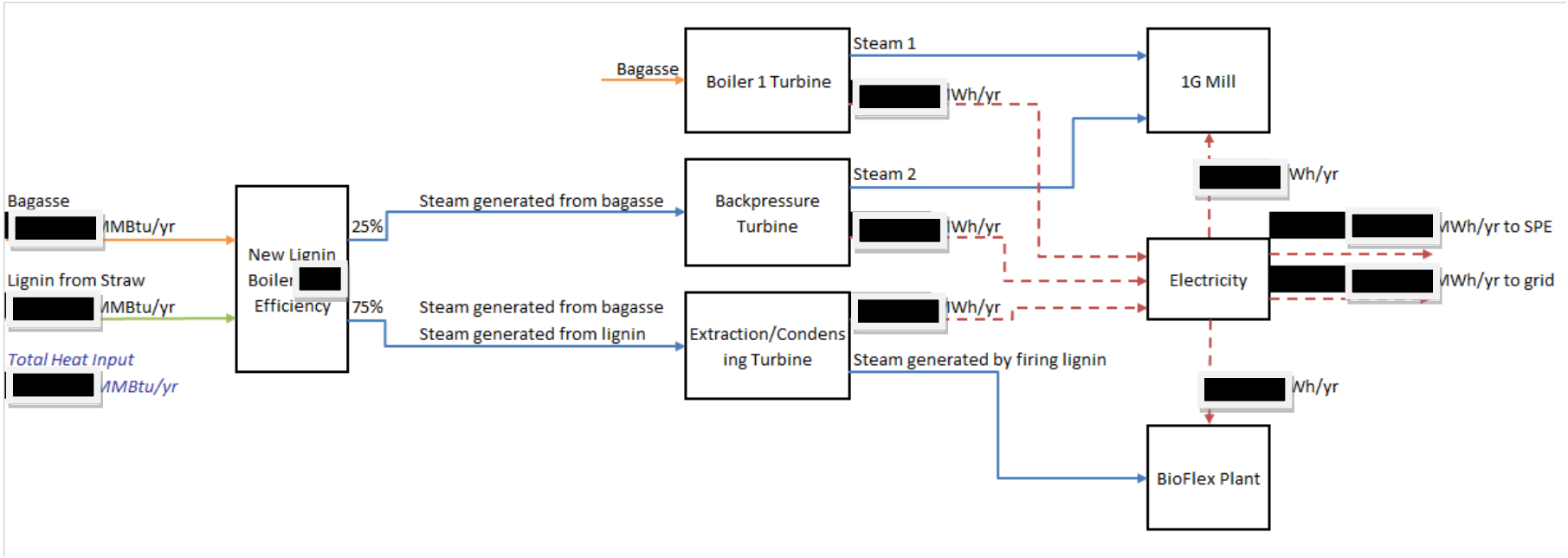

Figure 3. Energy Balance Schematic for SPE Steam/Power Plant.

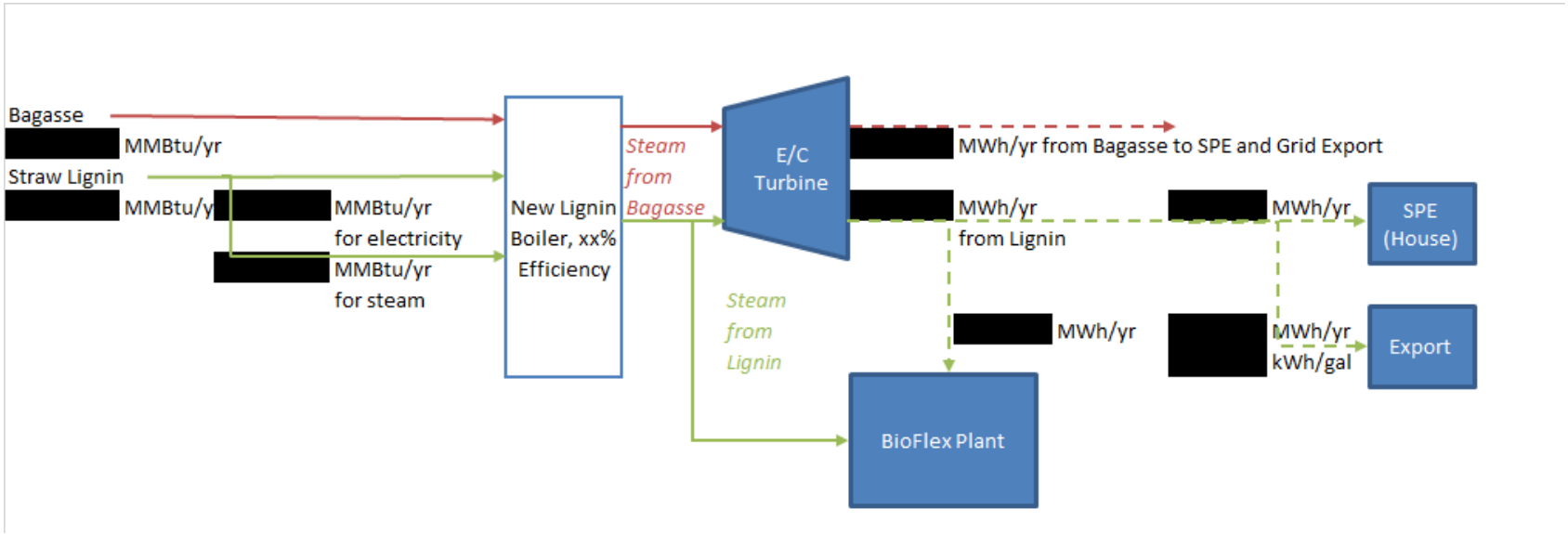

Figure 4. Detail of Energy Balance Around E/C Turbine

Copyright © 2014 Life Cycle Associates, LLC

As described above, only straw-lignin is assumed to supply the steam and electricity to BioFlex; the total amount of lignin combusted to generate steam and electricity is [redacted] MMBtu/yr. This translates to a BioFlex lignin consumption rate of [redacted] dry ton/gal. To estimate emissions from the lignin/bagasse boiler, CA-GREET emission factors for bagasse combustion are utilized. These factors also match the values in the most recent version of GREET. However, the emission factor for methane (31.65 g/mmBtu) appears excessive. LCA investigated the source of this factor and found that it is quite old and had significant uncertainty attached to it. Please refer to Appendix B for the details. For this analysis, LCA is utilizing the CH_4 and N_2O emission factors for bubbling fluidized beds (BFBs) that was developed by Finnish researchers and is now utilized to quantify biomass boiler emissions for Finland's National GHG inventory. GranBio's new lignin boiler is a BFB. The Finnish BFB emission factors are 2.2 g/mmBtu for CH_4 and 3.3 g/mmBtu for N_2O.

6. Ethanol Transport

Transportation differs from the default Brazilian sugarcane pathway, which assumes that half of the ethanol transported to the port is by pipeline, and the other half by rail. For the GranBio pathway, all ethanol is transported by heavy-duty diesel trucks from the plant facility over a distance of 59.7 km (37 miles) to Port Maceio, Brazil (per Google maps, Figure 5).

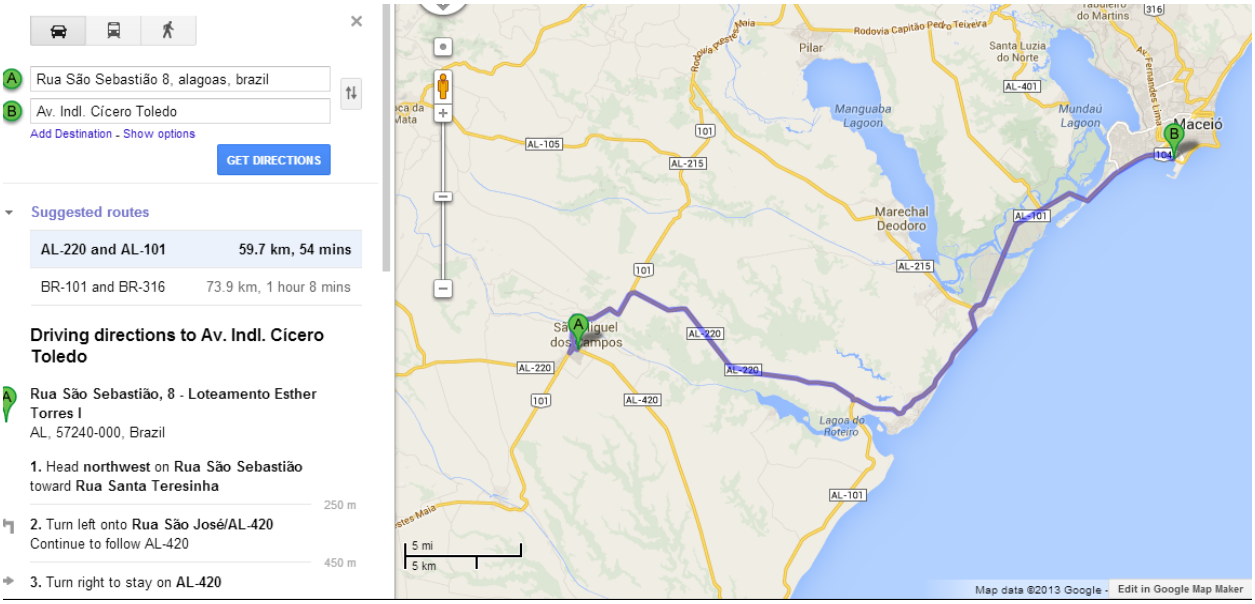

Figure 5. Truck distance from Plant in Sao Miguel Dos Campos to Port Maceio

Next, it is assumed that half of the ethanol travels to San Francisco (Richmond Terminal) and half travels to Long Beach by ocean tanker. The average tanker distance from Port Maceio is 7,458 miles. Figure 6 provides the tanker distance from Port Maceio to Long Beach Terminal while Figure 7 provides the distance to Richmond. The calculation is performed with the U.S. regional mix for the sugarcane ethanol pathway in CA-GREET. The local distribution distance is set to zero so only the overseas portion is calculated in the first step.

 Copyright © 2014 Life Cycle Associates, LLC

The CA-GREET default VOC emissions from the bulk terminal (6.667 g/mmBtu) are assumed at the terminal in Brazil and the terminal in California. Similarly the CA-GREET default VOC emission rate during refueling (13.082 g/mmBtu) is utilized. These losses incorporated into the carbon intensity in GREET by applying a loss factor to all upstream emissions. The loss factor with two bulk terminals increases to 1.00067 from 1.0005.

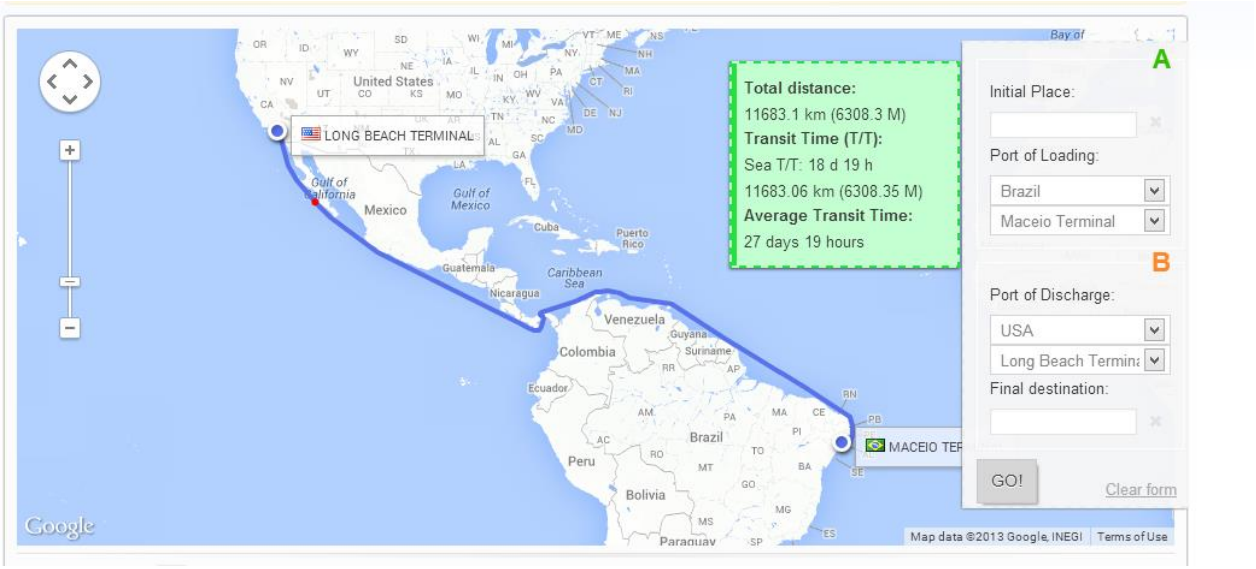

Figure 6. Marine Distance from Brazil to Long Beach, CA
www.searates.com/reference/portdistance

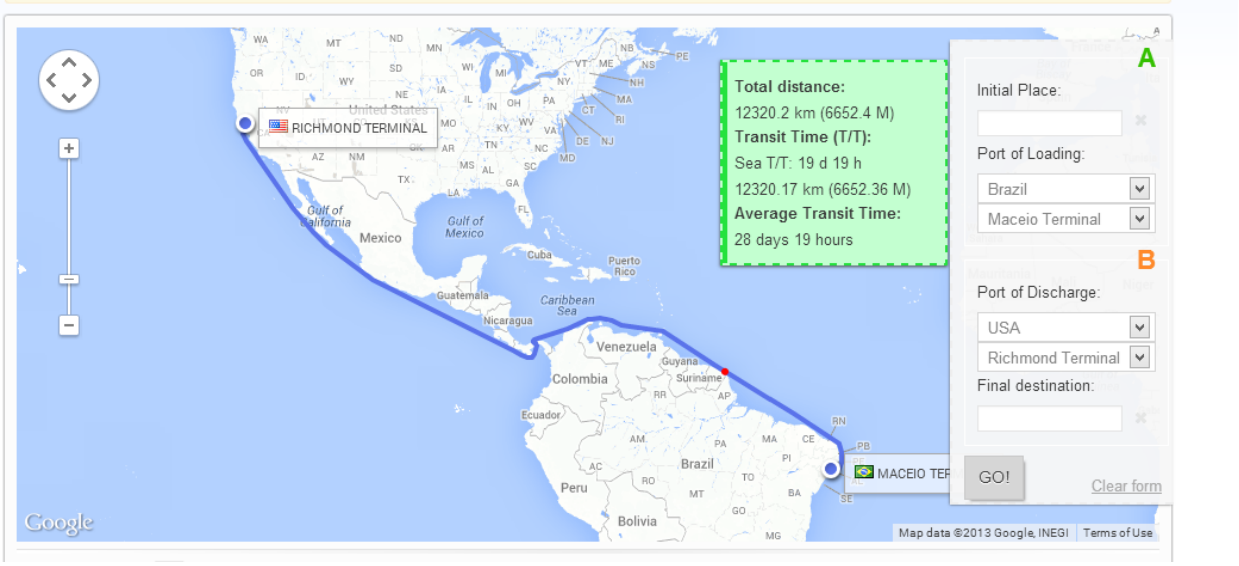

Figure 7. Marine Distance from Brazil to Richmond, CA
www.searates.com/reference/portdistance

For distribution in California, the LCFS default pathway assumes 100 miles of truck transport followed by 80 percent of the ethanol traveling an additional 50 miles to the local fuel station.

 Copyright © 2014 Life Cycle Associates, LLC

For the purposes of simplification, this truck transport mode was modeled with Regional LT set to CA Marginal, and by assuming that 100 percent of the ethanol is transported by truck. The California transport segments are calculated separately. The effect is a slight increase in CO_2 emissions due to the energy intensity for California petroleum assumed in CA GREET. The CI impact follows the approach in the Brazil pathway. Table 10 provides a summary of the transport assumptions.

Table 10. Summary of Transport Logistics

GranBio Plant to Port Maceio	37 miles by truck
Marine Transport	
Origin	Port Maceio, Brazil
Destination Ports	50% to Long Beach, 50% to Richmond, CA
Distance	7,458 miles
U.S. Transport	
Origin Port	Long Beach and Richmond, CA Terminals
Destination	Blending Terminal
Truck distance	100 miles + 80% x 50 miles

7. Denaturant Emissions

ARB has developed a value of 0.8 g CO_2e/MJ that may be added to the neat ethanol carbon intensity value to approximate the carbon intensity of denatured ethanol [3,4]. The 0.8 value has been added to the calculated carbon intensity value for GranBio's ethanol pathways where noted.

8. Pathway Calculation

The GranBio pathways were developed with the CA_GREET model using an external calculation. The analysis was based on the sugarcane ethanol pathway combined with elements of cellulosic ethanol. Life Cycle Associates provided the spreadsheet GranBio CA_GREET Disaggregated v2.xls which shows all of the GREET calculations and also provides reference CA_GREET model results. Table 11 shows the inputs for feedstock production. Table 12 shows the inputs for ethanol production.

[3] ARB (2009b) Detailed California-Modified GREET Pathway for Corn Ethanol, Version 2.1.

[4] ARB (2009c) California-GREET Model, Version 1.8b, Life Cycle Associates, based on GREET 1.8b by ANL. http://www.arb.ca.gov/fuels/lcfs/lcfs.htm.

Copyright © 2014 Life Cycle Associates, LLC

Table 11. Sugarcane Straw Feedstock Inputs

Biomass Farming		
Fuel Inputs (Feedstock Basis)		
Diesel	[redacted]	Btu/dry ton
Share in Stationary Engine	0%	
Share in Farming Tractor	100%	
Gasoline	0	Btu/dry ton
Natural gas	0	Btu/dry ton
LPG	0	Btu/dry ton
Total	[redacted]	Btu/dry ton
HDPE Use to prevent losses	0.37200	kg/ dry tonne

Electricity Input		Units	Convert to kWh	
Grid Electricity Use	0	Btu/dry ton	0.00	kWh/dry ton

Chemical Inputs		Units
Fertilizer Use		
Total N	[redacted]	
Ammonia Use		grams N/dry ton feed
Urea Use		grams N/dry ton feed
Ammonium Nitrate Use		grams N/dry ton feed
P_2O_5		g/ton, dry basis
K_2O		g/ton, dry basis
CaCO3	0	g/ton, dry basis
Herbicide Use		
Atrazine	0	g/ton, dry basis
Metolachlor	0	g/ton, dry basis
Acetochlor	0	g/ton, dry basis
Cyanazine	0	g/ton, dry basis
Insecticide Use	0	g/ton, dry basis

Direct Field Emissions	
N in N_2O as % of N in fertilizer and biomass	1.325%
N Content of Crop Residue Removed	0.37%
N in N2O avoided per unit N in residue	-1.25%
N in N2O avoided per unit residue removed	-0.004625%
Share of residue that would have been left on field	100%

Sugarcane Straw Field Burning		
Share of fields that employ burning	0%	
Share of straw that burns in fields that are burned	0%	
Sugarcane Straw Carbon Content	50%	
Sugarcane Pathway Burning Credit	0	g/MJ SC Ethanol

Vinasse/Stillage Application to Fields		
Vinasse quantity	[redacted]	tons/dry ton crop
Ammonia Content		grams N/dry ton crop
Urea Content		grams N/dry ton crop
Ammonium Nitrate Content		grams N/dry ton crop
P_2O_5		g/ton, dry basis
K_2O		g/ton, dry basis

Boiler Ash Application to Fields (P and K only, assume N is emitted as N_2, NO_x, N_2O)			
Boiler Ash P_2O_5 content	[redacted]	g/ton, dry basis	*Feed content less amount in stillage.*
Boiler Ash K_2O Content		g/ton, dry basis	*Feed content less amount in stillage.*

Copyright © 2014 Life Cycle Associates, LLC

Table 12. Ethanol Production Inputs for Straw Pathway

Ethanol Production

Yields				
Ethanol Yield	[redacted]	gal/dry ton		
Energy Inputs				
Biomass Consumption (feed and fuel)	[redacted]	dry ton/gal	[redacted]	kg/kg EtOH
Biomass Fuel Type	Lignin			
Biomass Burned	[redacted]	dry ton/gal	[redacted]	Btu/gal
Biomass LHV	15,397,789	Btu/dry ton		
Biomass Carbon Content	48%	Carbon Content by weight		
Biomass Boiler CH4 and N2O Factors	BFB			
Grid Electricity Consumption	[redacted]	kWh/gal	[redacted]	Btu/gal
Chemical Inputs (Enzymes etc)				
Alpha Amylase	[redacted]	tons/dry ton feedstock		
Gluco Amylase		tons/dry ton feedstock		
Cellulase		tons/dry ton feedstock		
Yeast		tons/dry ton feedstock		
[redacted]		tons/dry ton feedstock		
		tons/dry ton feedstock		
		tons/dry ton feedstock		
		Btu/gal ethanol		
Co-Products				
Boiler Ash	[redacted]	lb/dry ton feedstock		
Net Electricity Export		Units		
Electricity (credit is a negative value)	[redacted]	kWh/gal		
Electricity T&D Losses	8.1%			

Ethanol Transport Losses

T&D Loss Factors		
VOC From Bulk Terminal in exporting counti	6.6670	g/mmBtu
VOC From Bulk Terminal in U.S.	6.67	g/mmBtu
VOC From Refueling Station	13.082	g/mmBtu
	1.00067	T&D Loss Factor

Copyright © 2014 Life Cycle Associates, LLC

Disclaimer

This report was prepared by Life Cycle Associates, LLC for GranBio. Life Cycle Associates is not liable to any third parties who might make use of this work. No warranty or representation, express or implied, is made with respect to the accuracy, completeness, and/or usefulness of information contained in this report. Finally, no liability is assumed with respect to the use of, or for damages resulting from the use of, any information, method or process disclosed in this report. In accepting this report, the reader agrees to these terms.

Copyright © 2014 Life Cycle Associates, LLC

APPENDIX A

GranBio Submittal Regarding Sustainability of Straw Removal

SUGARCANE STRAW

The mechanized harvesting process for sugarcane (Saccharum spp.) generates significant dry mass deposition on the soil during cropping. The straw mass generated is directly related to the sugarcane crop yield, which varies according to the cultivar, environment and management system adopted (Landell et al., 2013).

As a benefits of leaving the straw in the field we have: protection of the soil surface against erosion; increased biological activity in the soil; increased water infiltration into the soil; more water available due to reduction in water evaporation from the soil surface; and weed control, with the result that the use of herbicide can be reduced (Trivelin et al., 2013; Conde et al.,2005; Manechini et al. 2005).

On the other side, the maintenance of a straw blanket on the field brings other problems with high potential of reduce yield and increase production costs, such as: fire hazards during and after harvesting; difficulties in carrying out mechanical cultivation, ratoon fertilization and selective control of weeds through the trash blanket; delayed rationing and the occurrence of gaps (discontinuity sprouts in the line of cane), causing a reduction in cane yield specially when temperatures are low and/or soil is very wet after harvesting; increase in population of pests that shelter and multiply under the trash and increase of minor diseases in which sugarcane are very susceptible due to fast multiplication of inoculum on the trash over the years, that can cause serious damage on sugarcane fields due to susceptibility of commercial varieties (Dinardo-Miranda & Fracasso, 2013; Manechini et al. 2005).

In order to maintain the benefits and reduce the problems of keeping the straw in the fields there is a consensus between sugarcane specialists that part of this straw needs to be removed from the field or, at least, from the line of sugarcane ratooning (Segnini et al., 2013; Landell et al., 2013). The recovered amount will be specific for each environment but can oscillate from 40% to 80% on most cases. GranBio's project at Alagoas State was designed to harvest from 50% to 65% of total straw remaining on the soil after mechanical harvest.

References:

Dinardo-Miranda, L.L.; Fracasso, J.V. Sugarcane straw and the populations of pests and nematodes. Sci. Agric. v.70, n.5, p.305-310, September/October 2013).

Segnini, A.; Carvalho, J.L.N; Bolonhezi, D.; Milori, D.M.B.P.; Silva, W.T.L.; Simões, M.L.; Cantarella, H.; Maria, I.C.de; Martin-Neto, L. Carbon stock and humification index of organic matter affected by sugarcane straw and soil management. Sci. Agric. v.70, n.5, p.321-326, September/October 2013.

Trivelin, P.C.O; Franco, H. C. J.; Otto, R.; 1, Ferreira, D. A.; Vitti, A. C.; Fortes, C.; Faroni, C.E.; Oliveira, E. C. A. and Cantarella, H. Impact of sugarcane trash on fertilizer requirements for São Paulo, Brazil, Scientia Agricola, v.70, n.5, p.345-352, September/October 2013.

Conde, A. J.; Penatti, C. P.; Bellinaso, I. F. Impacts on Soil. In. Hassuani, S. J.; Leal, M.R.L.V.; Macedo, I.de C. Biomass power generation: sugar cane bagasse and trash. Piracicaba: PNUD-CTC , 2005.

Manechini, C.; Ricci Junior, A.; Donzelli, J.L. Benefits and problems of trash left in the field. In. Hassuani, S. J.; Leal, M.R.L.V.; Macedo, I.de C. Biomass power generation: sugar cane bagasse and trash. Piracicaba: PNUD-CTC , 2005.

Landell, M.G.A., Scarpari, M.S.; Xavier, M.A.; Dos Anjos, I.A.; Baptista, A.S.; Aguiar, C.L.; Da Silva, D.N.; Bidóia, M.A.P.; Brancalião, S.R.; Bressiani, J.A.; Campos, M.F.; Miguel, P.E.M; Da Silva, T.N; Da Silva, V.H.P; Anjos, L.O.S; Ogata, B.H. Biomass potential of commercial and pre-commercial sugarcane cultivars. Scientia Agricola, v.70, n.5, p.299-304, September/October 2013.

APPENDIX B

Summary of Biomass Boiler Emission Factors

One element of cellulosic ethanol pathway emission calculations is the biomass boiler emission estimate. To estimate biomass boiler emissions, the amount of biomass combusted is combined with an emission factor with units of mass of pollutant per unit energy combusted. The CA-GREET biomass boiler emission factors match the values in the most recent version of GREET. However, the methane emission factor (31.65 g/mmBtu) appears excessive. Following the citations for this emission factor eventually leads from the 2006 IPCC Guidelines for National GHG Inventories (Chapter 2), to the Revised 1996 IPCC guidelines, and ultimately to the Corinair Default Emission Factors Handbook.[5] These values are provided in Table B-1. The Corinair default emission factors from 1994. The Corinair factors seem to have come from some 1990 work by Radian Corporation and the U.S. EPA. The work states that "additional research will need to be undertaken to further improve the quality of the emission factors."

Table B.1 also provides some additional emission factors for biomass boilers. Interestingly, the most recent version of GREET utilizes a much lower CH_4 emission factor and a much higher N_2O factor. A source for these emission factors was not discovered. EPA's AP-42 emission factors for combustion of wood residue in stoker boilers are provided. The CH_4 factor is approximately one third of the GREET/IPCC value while the N_2O is 25% higher. The AP-42 factors are based on 1998 ICCR stoker boiler source testing data[6].

Table B.1. Sources for GREET Biomass Boiler CH_4 and N_2O Emission Factors

Emission Factor Source	g/mmBtu, LHV		kg/mmBtu, HHV		lb/MMBtu, HHV		g/GJ-LHV	
	CH_4	N_2O	CH_4	N_2O	CH_4	N_2O	CH_4	N_2O
CA-GREET, GREET1 for sugarcane bagasse (IPCC 2006)	31.7	4.2						
40CFR Part 98 Mandatory GHG Reporting Solid Biomass fuels	30.9	4.1	0.032	0.0042				
EPA 2008, Direct Emissions from Stationary Combustion Sources	31.7	4.2					30	4
Revised 1996 IPCC Guidelines for National GHG Inventories	31.7	4.2					30	4
Corinair Default Emission Factors Handbook, 1994	31.7	3.9					30	3.65
GREET1_2013 for sorghum bagasse or lignin	3.8	11.0						
AP-42 Ch. 1.6 wood residue combustion in Boilers (2003)	9.2	5.7			0.021	0.013		

Table B.2 provides emission factors for biomass combustion in fluidized bed boilers. Fluidized bed boilers provide much more uniform combustion, resulting in significantly lower emissions of unburned hydrocarbons (including CH_4). Because N_2O precursors (e.g. HCN) are formed in fuel rich combustion zones, more uniform combustion also results in lower N_2O emissions. A 2007 study by Finnish researchers resulted in updated circulating fluidized bed (CFB) and bubbling fluidized bed (BFB) emission factors. These factors are now utilized in Finland's National GHG inventory[7] and are provided in Table B.2. A 2012 study by Korean researchers[8] evaluating source test data for CFBs found values even lower than the Finnish values.

---

[5] Corinair Technical annexes, volume 2, Default Emission Factors Handbook, 1994.

[6] Industrial Combustion Coordinated Rulemaking (ICCR) Emissions Test database, Version 5.0. U.S. EPA, Research Triangle Park, NC. 1998

[7] "Estimation of Annual CH_4 and N_2O Emissions from Fluidized Bed Combustion: an advanced measurement based method and its application to Finland", Eemeli Tsupari , Suvi Monni, Kauko Tormonen, Tuula Pellikka, Sanna Syri

Table B.2. Emission Factors for Fluidized Bed Boilers

Emission Factor Source	g/mmBtu, LHV		g/GJ-LHV	
	CH_4	N_2O	CH_4	N_2O
Finland National Inventory (CFB testing, 2007)	3.2	7.4	3	7
Finland National Inventory (BFB testing, 2007)	2.1	3.2	2	3
Korean CFB Source Test Data (2012)	1.5	4.2	1.4	4

[8] "Development of Methane and Nitrous Oxide Emission Factors for Biomass Fired Circulating Fluidized Bed Combustion Power Plant", Chang-Sang Cho, Jae-Hwan Sa, Ki-Kyo Lim, Tae-Mi Youk, Seung-Jin Kim, Seul-Ki Lee, and Eui-Chan Jeon, November 2012.

Appendix C

STAB Certification of Mechanized Harvesting

SOCIEDADE DOS TÉCNICOS AÇUCAREIROS E ALCOOLEIROS DO BRASIL

STAB - Regional Leste Insc. Est. ISENTO CNPJ 10.799.583/0001-16

DECLARAÇÃO

Declaramos, para os devidos fins, que conforme estimativas fornecidas pelas usinas associadas a esta **Sociedade dos Técnicos Açucareiros e Alcooleiros do Brasil – STAB Regional Leste**, que os quadros abaixo retratam os percentuais aproximados de áreas colhidas manualmente e por meio de colheitadeiras no Estado de Alagoas, na safra 2013/2014:

1) Usinas que Realizam Colheita Mecanizada no Estado de Alagoas:

Usina	Área Total (em Ha)	Colheita Mecanizada (em Ha)	(%)
Paisa	8.000	3.200	40
Seresta	12.000	4.200	35
Porto Rico	18.000	7.200	40
Sinimbú	13.000	3.900	30
Triunfo	18.000	10.800	60
Caeté	14.000	9.800	70
Santa Clotilde	13.000	2.600	20
Sumauma	7.000	2.100	30
Coruripe	29.000	1.500	5
Total	**132.000**	**45.300**	**34**

2) Área Total Cultivada com Cana de Açúcar no Estado de Alagoas

Área Total Cultivada com Cana de açúcar (Ha)	**430.000**	**100%**
Área Total Possível de Colheita Mecanizada (Ha)	**280.000**	**65%**
Área Efetivamente Com Colheita Mecanizada (Ha)	**45.300**	**16%**

Por ser verdade, firmamos a presente Declaração.

Cândido Carnaúba Mota – CONFEA 020136522-7
Presidente da STAB – Regional Leste

STAB - Regional Leste - Rua Durval Guimarães, 1217, Salas 301 e 307A, 3° andar, Emp. Leonardo da Vinci, Ponta Verde, CEP 57035-060,Maceió - AL - Fone: (82) 327-9632 e Fax : (82) 327-9228, stableste@stableste.org.br, www.stableste.org.br

Appendix D – Straw Collection Fuel Use

Diesel consumption = 583,706 liters for period January 10, 2013 through April 28, 2014
Straw collection = 144,101.155 tonnes straw for January 9, 2013 through April 28, 2014

Demonstrativo de Consumo Médio
Combustível

26/06/2014 16:54:33 Página : 1
PIMS C/S®

MNFR_202
Período : 01/09/2013 a 28/04/2014
Somente Equiptos com Unidade Medida Horas/Km
Instancia(s): 41
Disponibilidade dos Equipamentos: Disponível, Não Disponível, Vendido

Combustível	Qtde. Abastec.
DIESEL COMUM	583.705,98
Total Geral	**583.705,98**

Sumário de Cargas
Unid.Industrial

26/06/2014 17:28:04 Página: 1
PIMS C/S®

GRANBIO
RCMP_110
Data Movto Inicial: 01/09/2013
Data Movto Final: 28/04/2014
Unid. Industrial(is): 91
Hora Queima: sem Desconto

	Unid.Industrial	Cargas	TC	%	TC/C	TMP
	CD	8.719	144.101,155	100,00	16,527	2,00
Total Geral		**8.719**	**144.101,155**	**100,00**	**16,527**	**2,00**

GranBio
VERTIS

Demonstrativo Consumo Diesel
Consumo Geral
Período de 01/10/2013 á 28/04/2014

Abertura do Consumo Utilizado na Colheita de Palha

Fornecedores	Litros
Usina Caeté S.A	302.185,80
Postos + Distribuidores + Usina Porto Rico	191.751,94
Usina Triunfo Ltda	89.109,00
Total	**583.046,74**

Appendix E – New Lignin Boiler Efficiency Guarantee