EXHIBIT A – SENECA SOLAR PROJECT

SENECA MIDWAY SUNSET SOLAR FACILITY - COUNTY OF KERN, TAFT, CA

EXHIBIT B – PV SYST REPORT AND SENECA USAGE

Grid-Connected System: Simulation parameters

Project : **Seneca Project**

Geographical Site	**Bakersfield**		Country	**United States**
Situation	Latitude	35.4°N	Longitude	119.0°W
Time defined as	Legal Time	Time zone UT-8	Altitude	134 m
	Albedo	0.20		
Meteo data:	**Bakersfield**	Synthetic - Meteonorm 6.1		

Simulation variant : **Seneca 2.5MW 310W CS fixed - v4**

Simulation date 25/03/15 15h19

Simulation parameters

Collector Plane Orientation	Tilt	25°	Azimuth	0°
14 Sheds	Pitch	7.81 m	Collector width	3.91 m
Inactive band	Top	0.00 m	Bottom	0.00 m
Shading limit angle	Gamma	21.17 °	Occupation Ratio	50.1 %
Shadings electrical effect	Cell size	12.5cm	Strings in width	2
Models used	Transposition	Perez	Diffuse	Erbs, Meteonorm
Horizon	Free Horizon			
Near Shadings	Mutual shadings of sheds	Electrical effect		

PV Arrays Characteristics (2 kinds of array defined)

PV module	Si-poly	Model	**CS6X - 310P**		
		Manufacturer	Canadian Solar Inc.		
Sub-array "Sub-array #1"		In series	20 modules	In parallel	202 strings
Total number of PV modules		Nb. modules	4040	Unit Nom. Power	310 Wp
Array global power		Nominal (STC)	**1252 kWp**	At operating cond.	1145 kWp (45°C)
Array operating characteristics (50°C)		U mpp	659 V	I mpp	1738 A
Sub-array "Sub-array #2"		In series	20 modules	In parallel	304 strings
Total number of PV modules		Nb. modules	6080	Unit Nom. Power	310 Wp
Array global power		Nominal (STC)	**1885 kWp**	At operating cond.	1724 kWp (45°C)
Array operating characteristics (50°C)		U mpp	659 V	I mpp	2616 A
Total	Arrays global power	Nominal (STC)	**3137 kWp**	Total	10120 modules
		Module area	**19419 m²**	Cell area	17735 m²
Sub-array "Sub-array #1" : Inverter		Model	**ULTRA 1100-TL-OUTD-2-US-690-M/S -DNVKEMA**		
		Manufacturer	Power-One		
Characteristics		Operating Voltage	470-900 V	Unit Nom. Power	1000 kW AC
Sub-array "Sub-array #2" : Inverter		Model	**ULTRA 1500-TL-OUTD-2-US-690-M/S-DNVKEMA**		
		Manufacturer	Power-One		
Characteristics		Operating Voltage	470-900 V	Unit Nom. Power	1500 kW AC

PV Array loss factors

Grid-Connected System: Simulation parameters (continued)

Array Soiling Losses			Loss Fraction	1.5 %
Thermal Loss factor	Uc (const)	29.0 W/m²K	Uv (wind)	0.0 W/m²K / m/s
Wiring Ohmic Loss	Array#1	7.5 mOhm	Loss Fraction	1.8 % at STC
	Array#2	5.0 mOhm	Loss Fraction	1.8 % at STC
	Global		Loss Fraction	1.8 % at STC
Module Quality Loss			Loss Fraction	-0.4 %
Module Mismatch Losses			Loss Fraction	1.0 % at MPP

Incidence effect, user defined profile

10°	20°	30°	40°	50°	60°	70°	80°	90°
1.00	1.00	1.00	1.00	1.00	0.99	0.92	0.73	0.00

System loss factors

AC wire loss inverter to transfo	Inverter voltage	690 Vac tri		
	Wires	83 m 3x2000 mm²	Loss Fraction	0.5 % at STC
External transformer	Iron loss (24H connexion)	3057 W	Loss Fraction	0.1 % at STC
	Resistive/Inductive losses	2.3 mOhm	Loss Fraction	1.5 % at STC

User's needs : Unlimited load (grid)

Grid-Connected System: Main results

Project : **Seneca Project**

Simulation variant : **Seneca 2.5MW 310W CS fixed - v4**

Main system parameters	System type	**Grid-Connected**		
PV Field Orientation	Sheds disposition, tilt	25°	azimuth	0°
PV modules	Model	CS6X - 310P	Pnom	310 Wp
PV Array	Nb. of modules	10120	Pnom total	**3137 kWp**
Inverter	ULTRA 1100-TL-OUTD-2-US-690-M/S -DNVKEMA		Pnom	1000 kW ac
Inverter	ULTRA 1500-TL-OUTD-2-US-690-M/S-DNVKEMA		Pnom	1500 kW ac
Inverter pack	Nb. of units	2.0	Pnom total	**2500 kW ac**
User's needs	Unlimited load (grid)			

Main simulation results				
System Production	**Produced Energy**	**5469 MWh/year**	Specific prod.	1743 kWh/kWp/year
	Performance Ratio PR	82.1 %		

Normalized productions (per installed kWp): Nominal power 3137 kWp

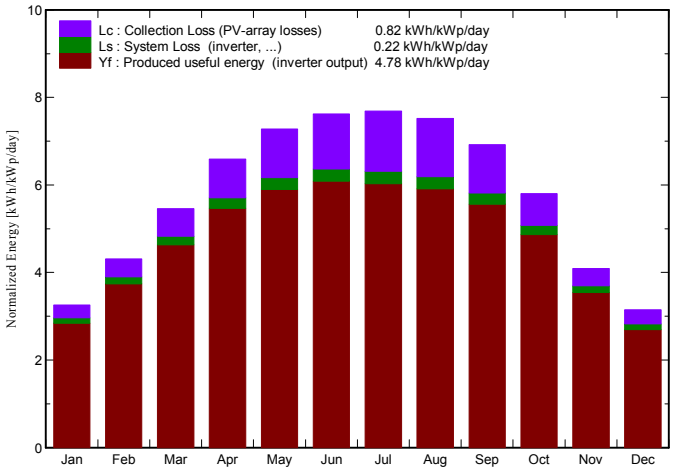

Performance Ratio PR

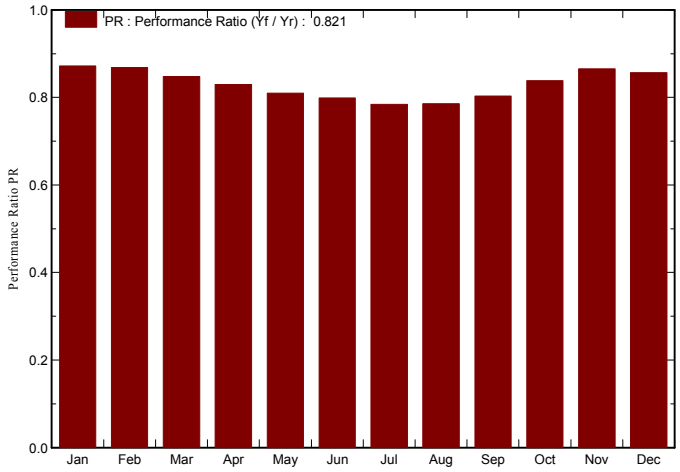

Seneca 2.5MW 310W CS fixed - v4

Balances and main results

	GlobHor	T Amb	GlobInc	GlobEff	EArray	E_Grid	EffArrR	EffSysR
	kWh/m²	°C	kWh/m²	kWh/m²	MWh	MWh	%	%
January	71.4	9.01	100.9	95.6	288.4	276.0	14.72	14.09
February	92.7	11.21	120.6	114.7	343.0	328.6	14.64	14.03
March	143.6	14.31	169.3	160.7	470.0	450.2	14.30	13.70
April	184.3	16.41	197.8	187.8	537.4	514.7	13.99	13.40
May	228.4	21.41	225.7	214.3	599.5	573.4	13.68	13.08
June	241.2	25.21	228.6	217.6	599.0	572.8	13.50	12.90
July	247.0	28.81	238.4	227.2	613.8	586.4	13.26	12.67
August	223.9	28.01	233.2	222.6	601.8	574.9	13.29	12.70
September	177.8	25.01	207.6	198.6	547.3	523.3	13.58	12.98
October	136.9	19.21	179.9	172.2	494.1	473.2	14.14	13.55
November	86.4	12.71	122.7	116.9	347.7	333.2	14.59	13.98
December	65.5	9.11	97.6	92.4	274.6	262.4	14.48	13.84
Year	1899.2	18.41	2122.3	2020.5	5716.6	5469.0	13.87	13.27

Legends:				
	GlobHor	Horizontal global irradiation	EArray	Effective energy at the output of the array
	T Amb	Ambient Temperature	E_Grid	Energy injected into grid
	GlobInc	Global incident in coll. plane	EffArrR	Effic. Eout array / rough area
	GlobEff	Effective Global, corr. for IAM and shadings	EffSysR	Effic. Eout system / rough area

Grid-Connected System: Loss diagram

Project : **Seneca Project**

Simulation variant : **Seneca 2.5MW 310W CS fixed - v4**

Main system parameters	System type	**Grid-Connected**		
PV Field Orientation	Sheds disposition, tilt	25°	azimuth	0°
PV modules	Model	CS6X - 310P	Pnom	310 Wp
PV Array	Nb. of modules	10120	Pnom total	**3137 kWp**
Inverter	ULTRA 1100-TL-OUTD-2-US-690-M/S -DNVKEMA		Pnom	1000 kW ac
Inverter	ULTRA 1500-TL-OUTD-2-US-690-M/S-DNVKEMA		Pnom	1500 kW ac
Inverter pack	Nb. of units	2.0	Pnom total	**2500 kW ac**
User's needs	Unlimited load (grid)			

Loss diagram over the whole year

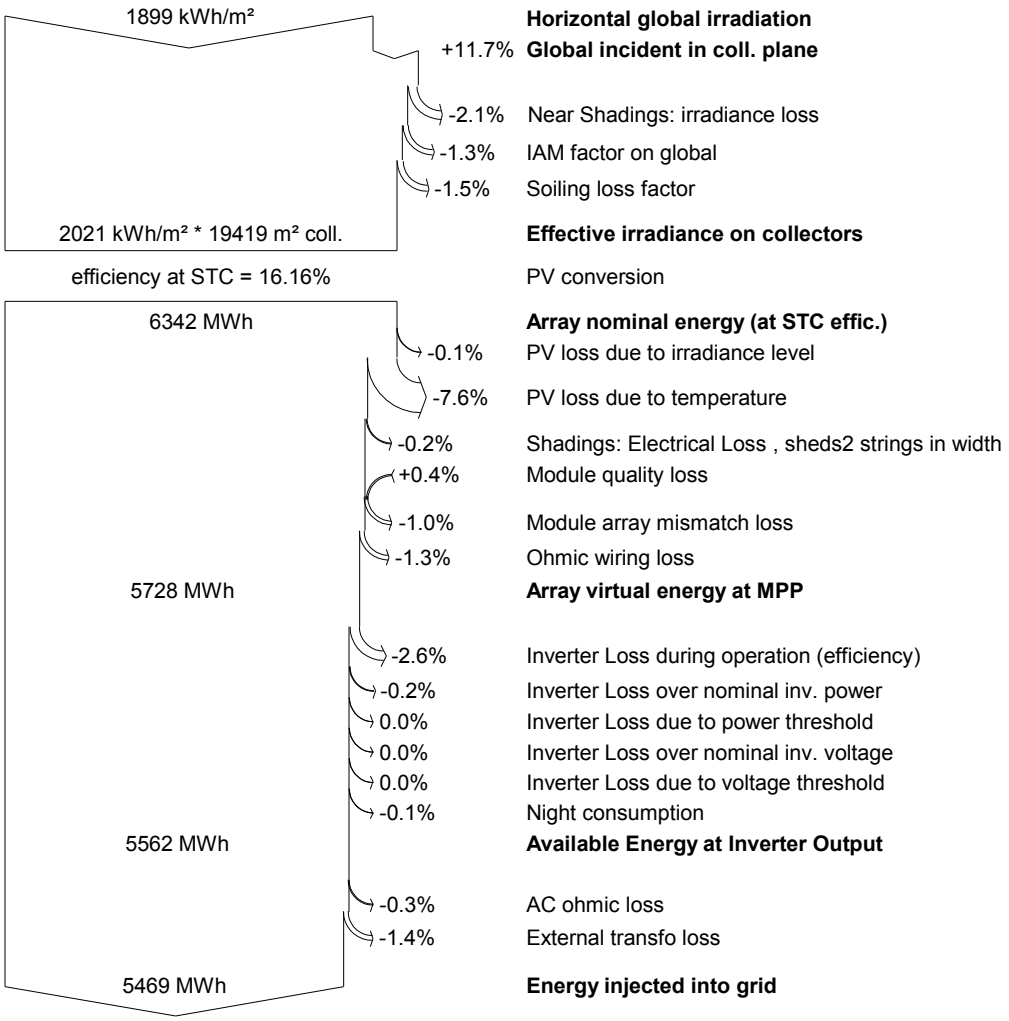

Grid-Connected System: P50 - P90 evaluation

Project : **Seneca Project**

Simulation variant : **Seneca 2.5MW 310W CS fixed - v4**

Main system parameters	System type	**Grid-Connected**		
PV Field Orientation	Sheds disposition, tilt	25°	azimuth	0°
PV modules	Model	CS6X - 310P	Pnom	310 Wp
PV Array	Nb. of modules	10120	Pnom total	**3137 kWp**
Inverter	ULTRA 1100-TL-OUTD-2-US-690-M/S -DNVKEMA		Pnom	1000 kW ac
Inverter	ULTRA 1500-TL-OUTD-2-US-690-M/S-DNVKEMA		Pnom	1500 kW ac
Inverter pack	Nb. of units	2.0	Pnom total	**2500 kW ac**
User's needs	Unlimited load (grid)			

Evaluation of the Production probability forecast

The probability distribution of the system production forecast for different years is mainly dependent on the meteo data used for the simulation, and depends on the following choices:

Meteo data source		Meteonorm 6.1
Meteo data	Kind	TMY, multi-year
Specified Deviation	Climate change	0.0 %
Year-to-year variability	Variance	2.5 %

The probability distribution variance is also depending on some system parameters uncertainties

Specified Deviation	PV module modelling/parameters	2.0 %	
	Inverter efficiency uncertainty	0.5 %	
	Soiling and mismatch uncertainties	1.0 %	
	Degradation uncertainty	0.6 %	
	Custom variability	0.5 %	
Global variability (meteo + system)	Variance	3.5 %	(quadratic sum)

Annual production probability	**Variability**	**191 MWh**
	P50	**5469 MWh**
	P90	**5224 MWh**
	P99	**5025 MWh**

Probability distribution

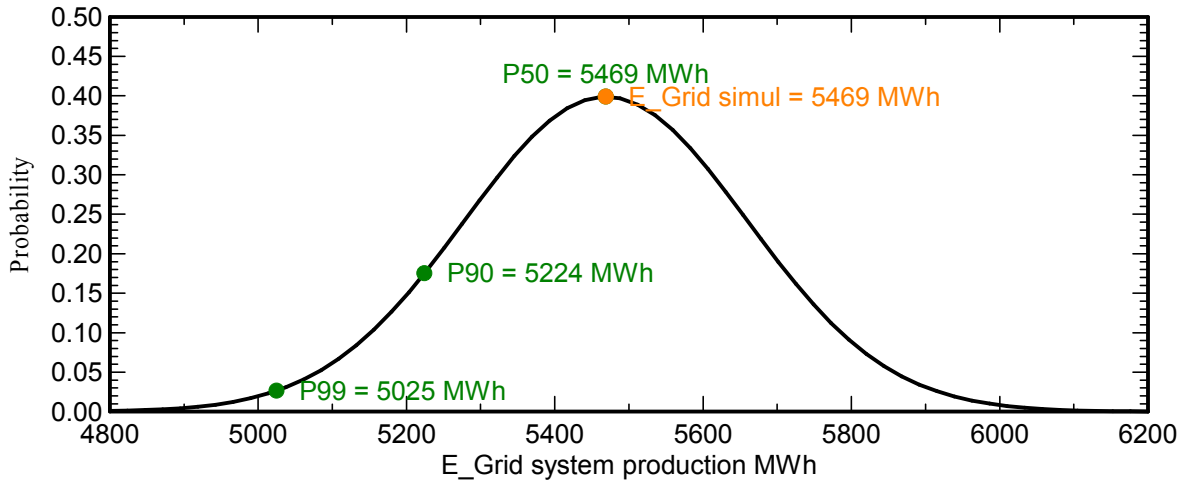

EXHIBIT B-1 – SOLAR GENERATION VS. OIL FIELD ELECTRICITY LOAD

Seneca North Midway Sunset Solar Project - 3.1 MW DC/ 2.5 MW AC - Month by Month - Solar Production vs. Oil Field Electricity Load - Offset	Forecast Year 1 - Solar Generation (in KWH)	Historical Electricity Load[1] (in KWH)	% Electricity Offset by Solar
January	276,000	2,351,267	11.74%
February	328,600	2,030,008	16.19%
March	450,200	2,259,469	19.93%
April	514,700	2,280,989	22.56%
May	573,400	2,570,102	22.31%
June	572,800	2,332,400	24.56%
July	586,400	2,335,846	25.10%
August	574,900	2,420,521	23.75%
September	523,300	2,373,378	22.05%
October	473,200	2,060,930	22.96%
November	333,200	2,469,041	13.50%
December	262,400	2,430,583	10.80%
Totals	**5,469,100**	**27,914,534**	**19.59%**

[1] The historical electricity load data for Seneca's North Midway Sunset Oil Field ("Oil Field") is the average by month for years 2013, 2014, and 2015.

EXHIBIT C – ENGINEERING DOCUMENTS

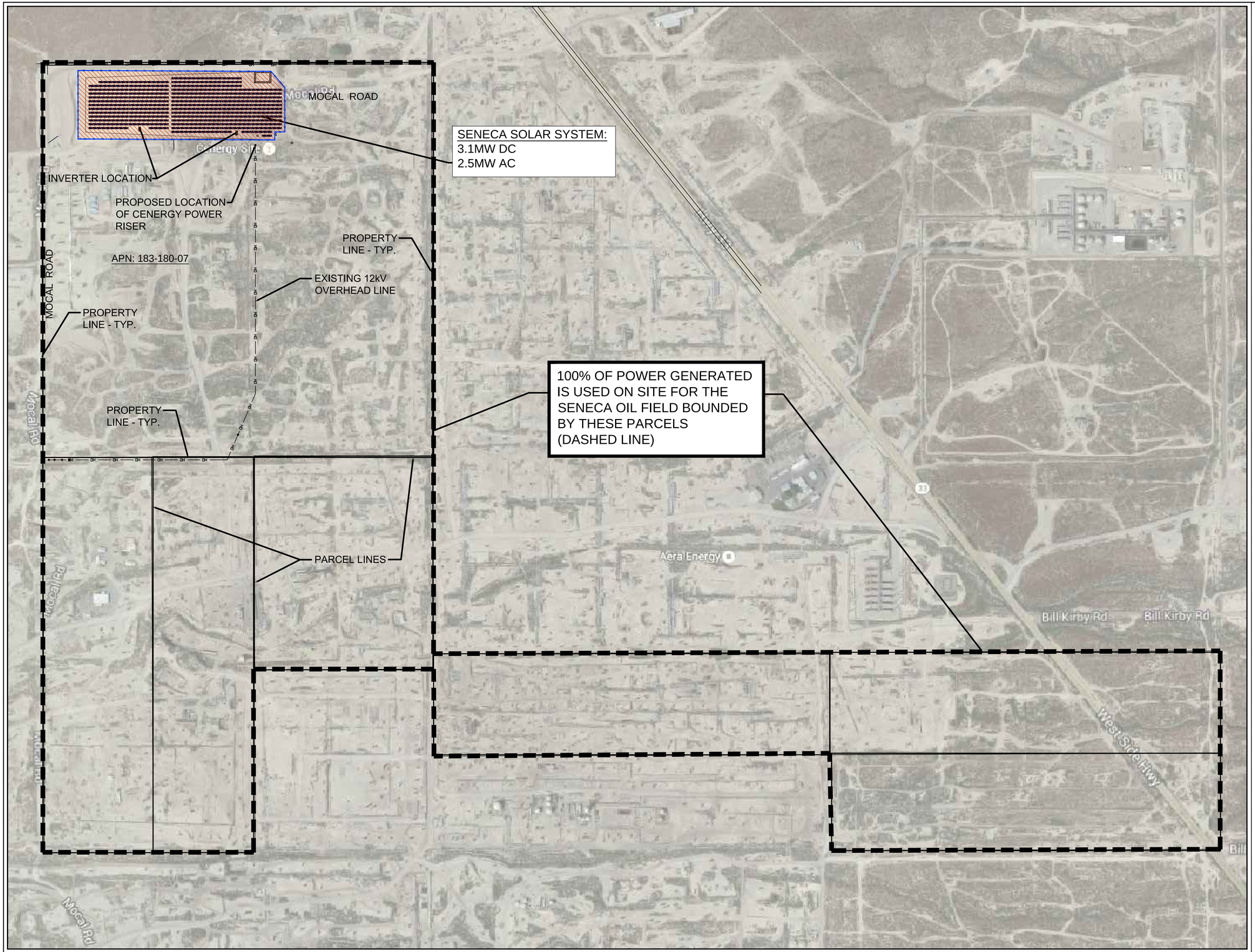

ADDRESS:

MOCAL ROAD
TAFT, CA 93224

GPS: 35.237466°, -119.595102°

COUNTY NAME: KERN COUNTY

PARCEL NUMBER: 183-180-07

LEGAL DESCRIPTION:

SECTION 15, TOWNSHIP 31 RANGE 22, QUARTER.

PARCEL AREA: 139.34 ACRES.

SOLAR SITE AREA: 14.50± ACRES.

SOLAR PANELS:
CANADIAN SOLAR PANELS
CS6X-310P, 310W.

SYSTEM CAPACITY = 3.1372 MWP.

INVERTER:
1 UNIT - ULTRA 1000-TL-OUTD-2-US-690.
1 UNIT - ULTRA 1500-TL-OUTD-2-US-690.

CREDIT CALCULATION:

SOLAR SITE PRODUCES
5,400,000KWH PER YEAR:

CREDIT PER YEAR = 511 X 5.4MWH
= 2,760 METRIC TONS (MT) CREDITS
PER YEAR

NORTH

1	GROUND MOUNT SOLAR LAYOUT - CARBON CREDIT	SCALE: 1"=300'

CENERGY POWER
UNMATCHED CLEAN ENERGY
A DIVISION OF BAP POWER CORPORATION
3176 LIONSHEAD AVENUE, #11
CARLSBAD, CA 92010
OFFICE: 760.603.1933
FAX: 760.603.1916
www.CenergyPower.com

REVISION

NO.	DATE	DESCRIPTION
A-1	05-26-16	COMPLETED EXHIBIT
A-2	06-27-16	UPDATED EXHIBIT

APPROVED

RICKY G. DOMINISE
REGISTERED CIVIL ENGINEER
DATE: 6/27/2016

REGISTERED PROFESSIONAL ENGINEER RICKY G. DOMINISE EXP. 6-30-15 NO. C 67905 CIVIL STATE OF CALIFORNIA

PROJECT: SOLAR INSTALLATION

OWNER: SENECA RESOURCES CORPORATION TAFT

ADDRESS: MOCAL RD, TAFT, CA 93224

SHEET TITLE: GROUND MOUNT SOLAR LAYOUT

SHEET NO. EX1

DRAWN BY: JS/RGD
DATE: 6/27/2016

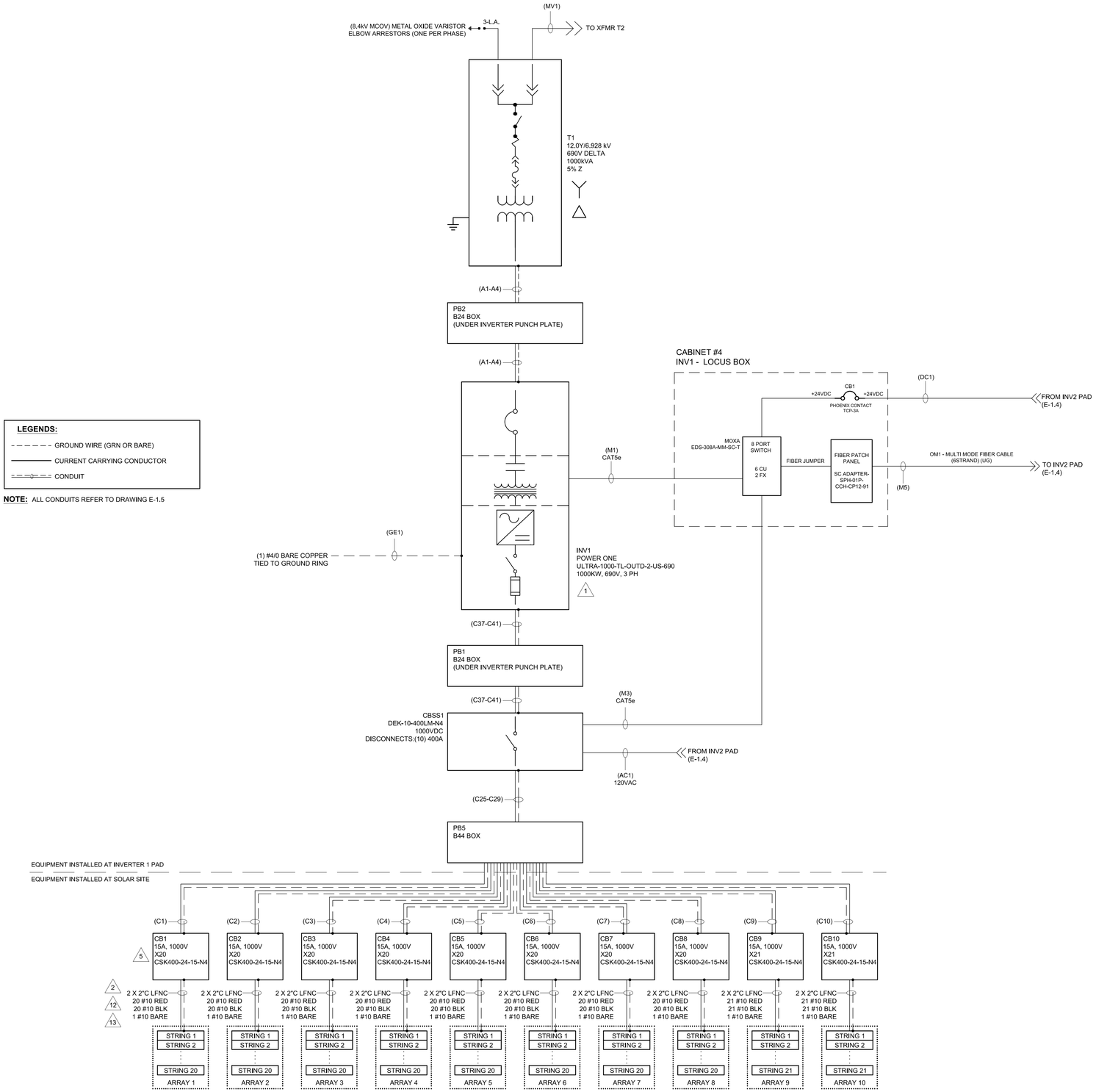

LEGENDS:

- - - - - - GROUND WIRE (GRN OR BARE)
——— CURRENT CARRYING CONDUCTOR
= = = = = CONDUIT

NOTE: ALL CONDUITS REFER TO DRAWING E-1.5

3176 Lionshead Ave., #11
Carlsbad, CA 92010
Office: 760.603.1933
FAX: 858.312.0934
www.CenergyPower.com

CENERGY POWER
UNMATCHED CLEAN ENERGY
A DIVISION OF BAP POWER CORPORATION

REVISION

NO.	DATE	DESCRIPTION
E-v5	04/30/15	UPDATED CBSS1
E-v6	07/03/15	ADD CLOUD OF PREVIOUS REVISION
F-v1	08/13/15	UPDATED WIRE TYPE & FIBER PAIR
F-v2	09/09/15	UPDATED COMM. WIRE
F-v3	10/06/15	ADDED LABELS FOR CONDUITS
G-v1	10/28/15	UPDATED LABELS FOR CONDUITS
G-v2	11/06/15	UPDATED COMM. SECTION

P.E. STAMP APPROVAL

REGISTERED PROFESSIONAL ENGINEER
Scott Allen Wilson
No. 18314
Electrical
STATE OF CALIFORNIA

SYSTEM RATINGS

3.137 2000 kW-DC (STC)
2.884 2000 kW-DC (PTC)
2.783 2530 kW-AC (CEC)

AC NAMEPLATE:
2,500,000 KW

PROJECT

SOLAR INSTALLATION

OWNER

SENECA RESOURCES CORP

ADDRESS: MOCAL RD., TAFT, KERN COUNTY, CA 93224

SHEET TITLE

SINGLE LINE DIAGRAM 1

SHEET NO.

E-1.2

DRAWN BY: V-TEAM

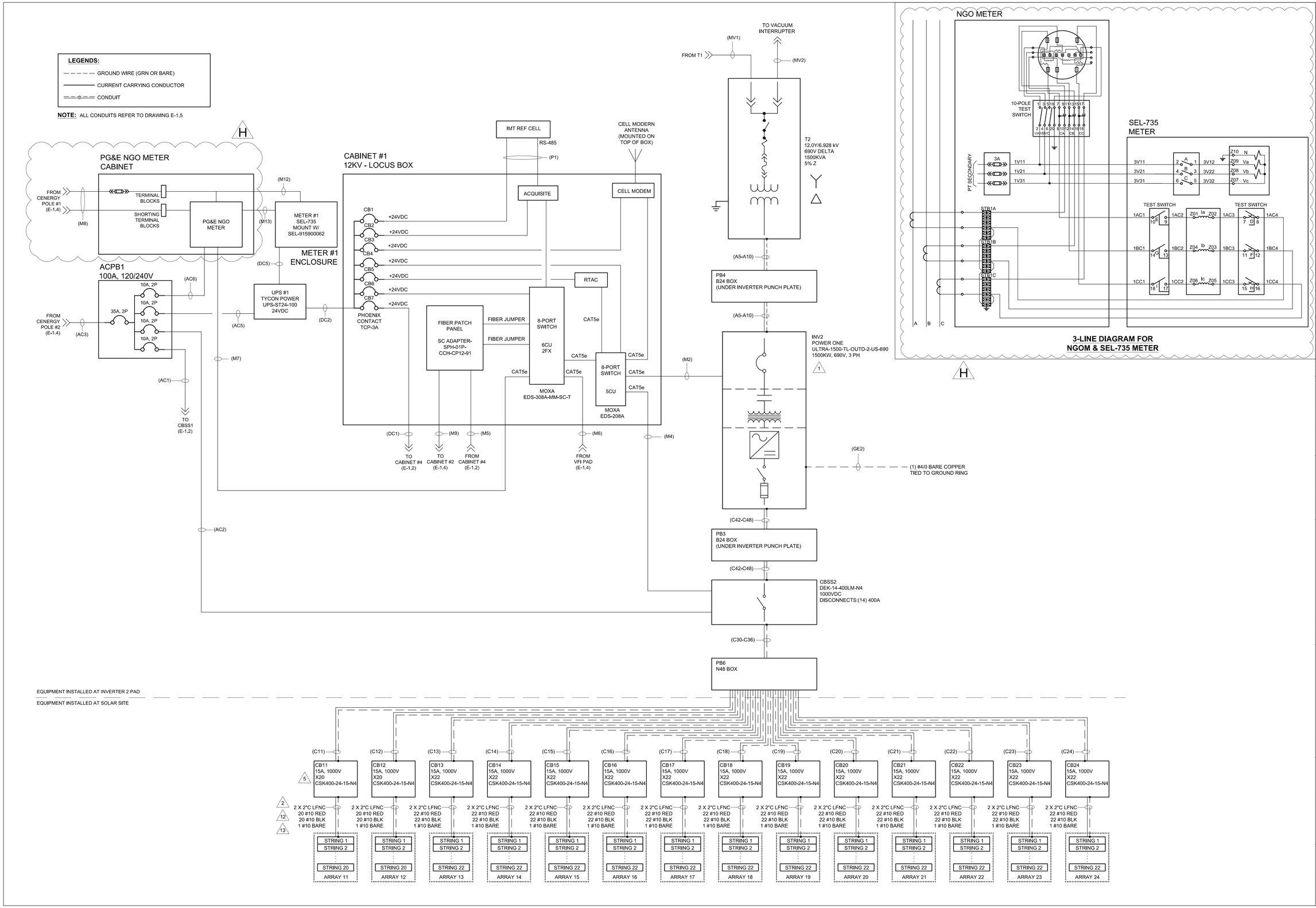

CENERGY POWER
UNMATCHED CLEAN ENERGY
A DIVISION OF BAP POWER CORPORATION
3176 Lionshead Ave., #11
Carlsbad, CA 92010
Office: 760.603.1933
FAX: 858.317.2084
www.CenergyPower.com

NO	DATE	REVISION DESCRIPTION
H-7	05/06/16	REVISED ONE LINE & 3 LINE DIAGRAM FOR SEL-735 & NGO METER.
H-8	05/09/16	UPDATED ACPB1, DCS, ADDED ACB.
H-9	05/10/16	UPDATED REF METER

P.E. STAMP APPROVAL

REGISTERED PROFESSIONAL ENGINEER — No. 18314 — Exp. 12/31/16 — ELECTRICAL — STATE OF CALIFORNIA

SYSTEM RATINGS

3.137 2000 kW-DC (STC)
2.884 2000 kW-DC (PTC)
2.783 2530 kW-AC (CEC)

AC NAMEPLATE: 2,500,000 kW

PROJECT: SOLAR INSTALLATION

OWNER: SENECA RESOURCES CORP

ADDRESS: MOGAL RD., TAFT, KERN COUNTY, CA 93224

SHEET TITLE: SINGLE LINE DIAGRAM 2

SHEET NO. E-1.3

DRAWN BY: V-TEAM

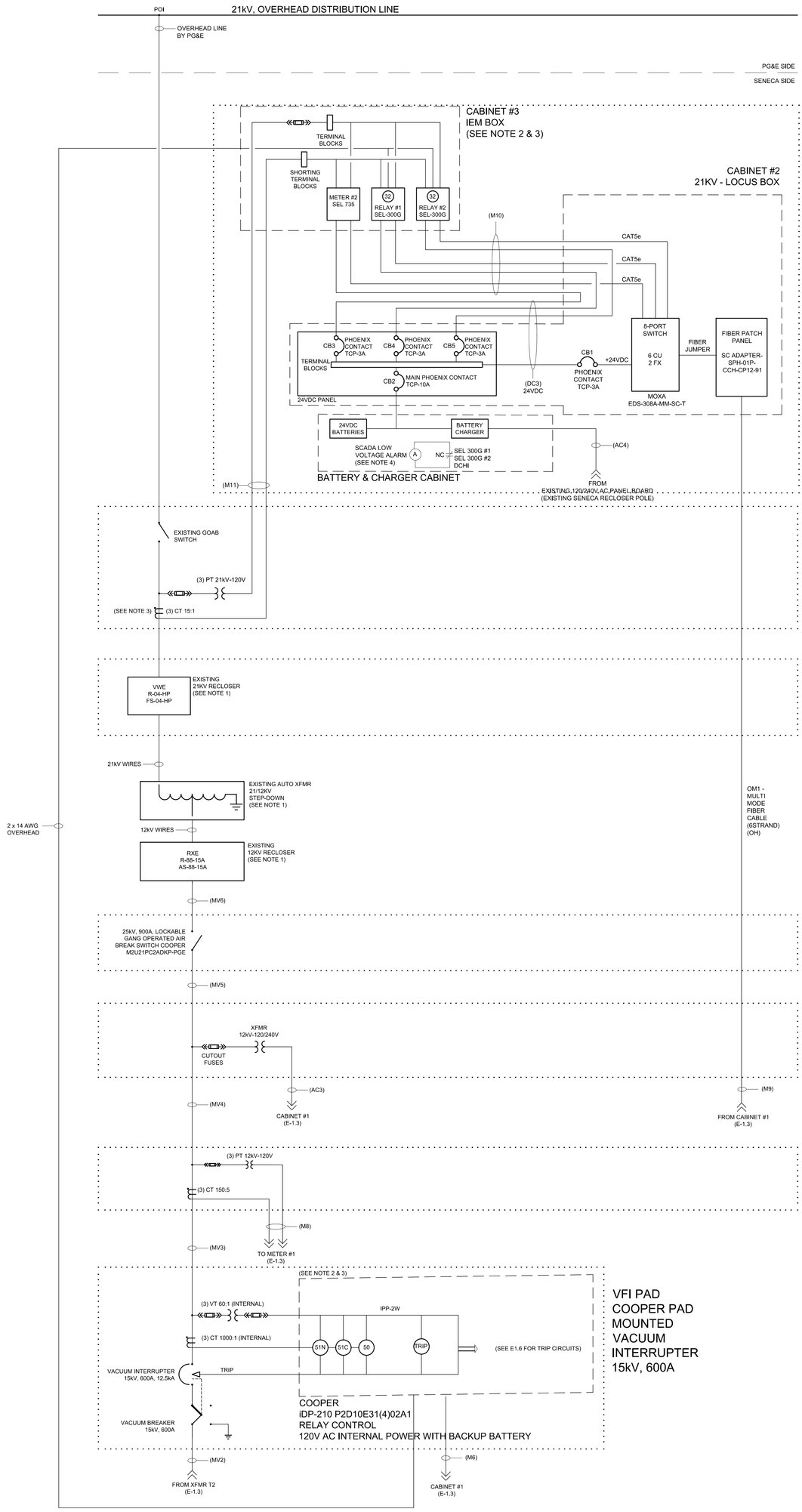

NOTES:

1. SEE SENECA RESOURCES CORPORATIONS SINGLE LINE SHEET E2 FOR DETAILS.

2. PV SYSTEM HAS BEEN DESIGNED FOR NON-EXPORT TO PG&E. SEL 300G RELAY 1 AND RELAY 2 WILL TRIP 12KV VACUUM FAULT INTERRUPTER (VFI) VIA REVERSE POWER FUNCTION 32.

3. SEL 300G RELAYS WILL SEND TRIP SIGNAL TO 12KV VFI in 2 SECONDS WHEN REVERSE POWER IS 3KVA AT 21KV CT/PT VIA FIBER CABLE.

4. BATTERY VOLTAGE IS MONITORED ON SEL RELAYS POWER SUPPLY TERMINATIONS THROUGH DC BATTERY DCHI RELAY WORD BIT . SCADA SYSTEM WILL NOTIFY CENERGY POWER OPERATION PERSONNEL IF RELAYS SENSE VOLTAGE LOWER THAN 24VDC FOR MORE FOR 2 SEC.

SINGLE LINE DIAGRAM LEGEND	
	VACUUM INTERRUPTER
	REMOVABLE FUSE
	SURGE ARRESTOR
	DISCONNECT
	POWER TRANSFORMER
	POTENTIAL TRANSFORMER
	CURRENT TRANSFORMER
	SWITCHBOARD GROUND

Ø2/B
Ø3/A
Ø1/C
SYSTEM PHASE SEQUENCE

SHEET NO.	SHEET TITLE	OWNER	PROJECT	SYSTEM RATINGS	P.E. STAMP APPROVAL
E-1.4	SINGLE LINE DIAGRAM 3	SENECA RESOURCES CORP	SOLAR INSTALLATION	3,137.2000 kW-DC (STC) 2,884.2000 kW-DC (PTC) 2,783.2530 kW-AC (CEC) AC NAMEPLATE: 2,500.0000 KW	REGISTERED PROFESSIONAL ENGINEER No. 10314 Exp. 12-31-16 ELECTRICAL STATE OF CALIFORNIA
DRAWN BY: V-TEAM		ADDRESS: MOCAL RD., TAFT, KERN COUNTY, CA 93224			

REVISION		
NO.	DATE	DESCRIPTION
N-v3	05/06/16	ADDED NOTE 4
N-v4	05/09/16	UPDATED BATTERY & CHARGER CABINET.
N-v5	05/17/16	UPDATED LOW VOLTAGE ALARM
P-v1	06/21/16	ADDED OVERHEAD LINE

CENERGY POWER
UNMATCHED CLEAN ENERGY
A DIVISION OF BAP POWER CORPORATION

3176 Lionshead Ave., #11
Carlsbad, CA 92010

Office: 760.603.1933
FAX: 858.433.2994
www.CenergyPower.com

1) UTILIY SIDE MONITORING & NON-EXPORT PROTECTION

21kV Monitoring System (From sheet E-1.4_SLD_137_P-v1.PDF)

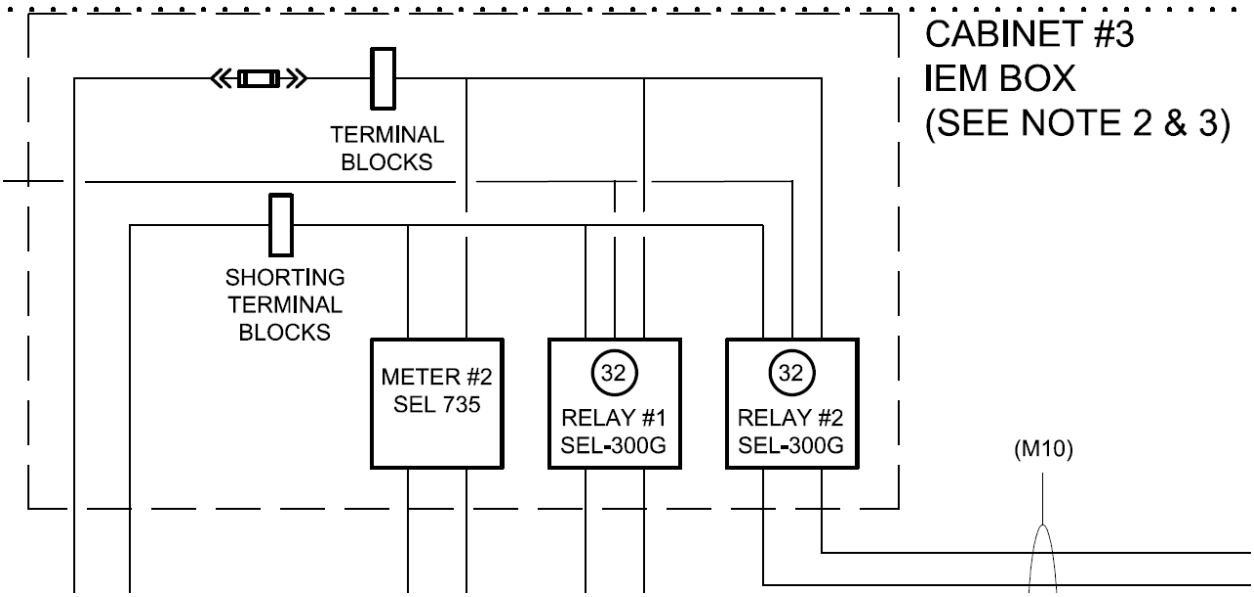

1) Meter #2 (SEL-735) Monitors the 21kV meter feeding the Seneca sitefrom the ulility. From this meter, the Locus Energy DAS system can get readings every 5 minutes. We can then track all import and export energy from the utility feed to verify we are not back feeding the utility main line.

2) Relay #1 and Relay #2 (SEl-300G) also monitor the power on the 21kV input line from the utility. These device will sense and back feed into the utility, and will send a signal to the VFI (Below) to trip the VFI, and open the circuit from the 12kV output (Seneca Private Line) from the Solar System.

VFI SYSTEM (From sheet E-1.4_SLD_137_P-v1.PDF)

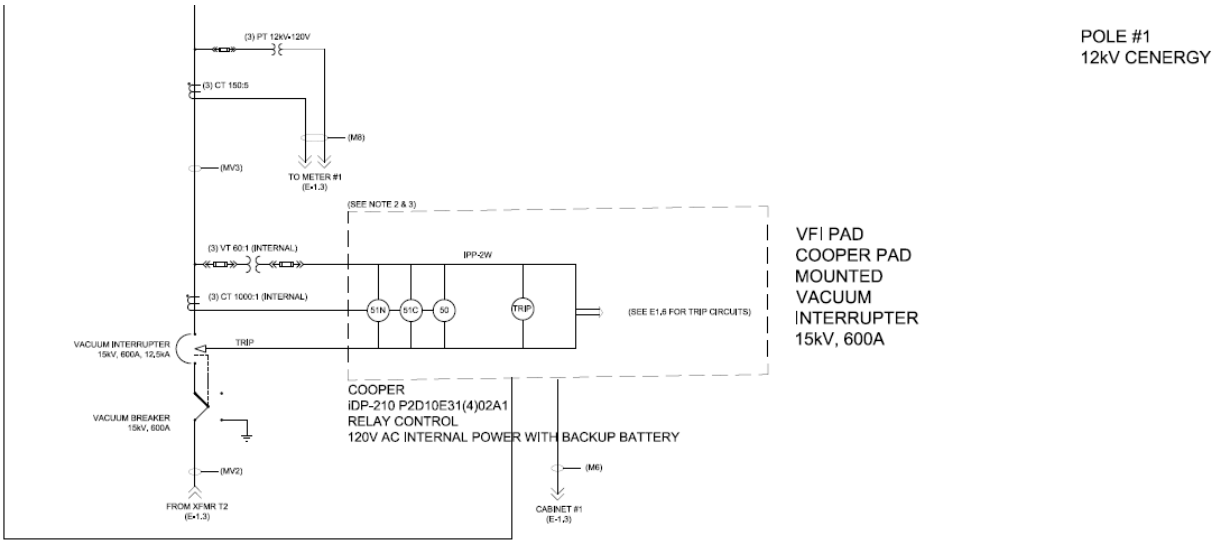

3) Shown above is the Cooper VFI Interrupter. Signals from the SEL-300G relays feeds this protection device, and disconnects the Solar system from the Sencas 12kV private line in case of back feed to the utility.

DAS SYSTEM and Solar Production Meter (From sheet E-1.3_SLD_137_H-v9.PDF)

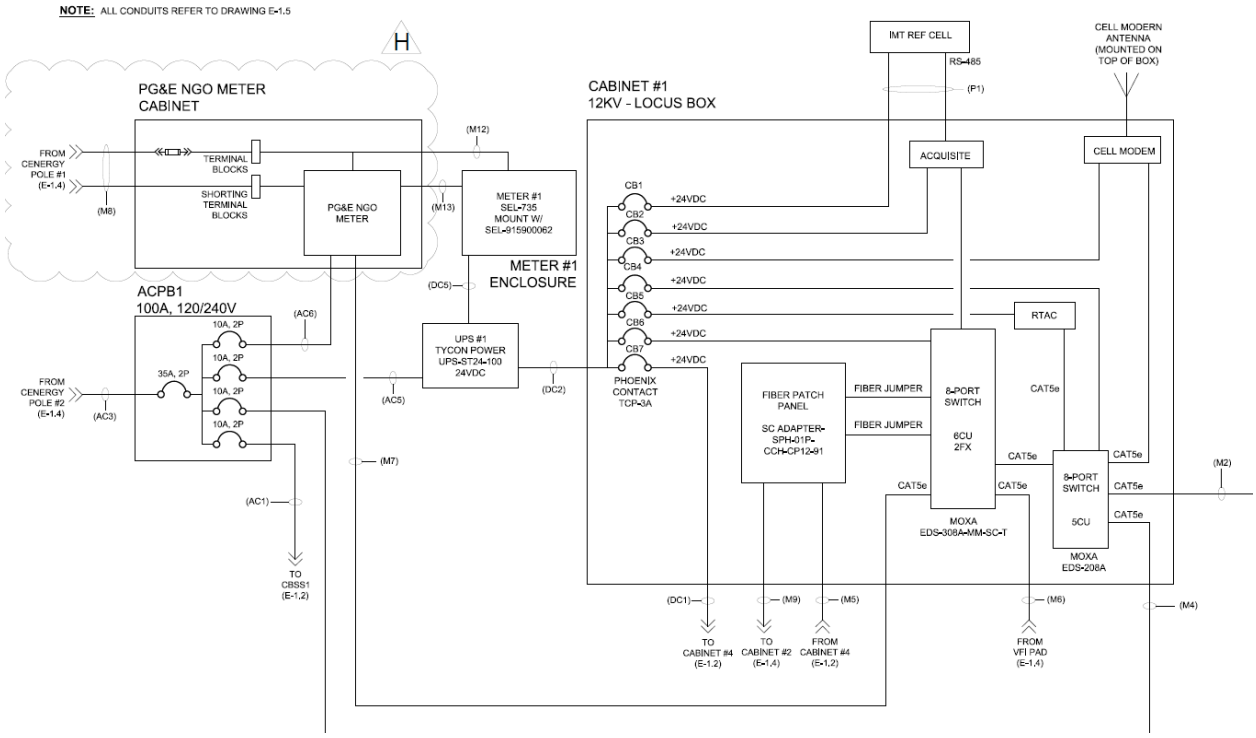

1) The DAS system is designated as Cabinet #1 12kV – Locus Box. The DAS system collects data for the site, including:
    a. Meter #1 – SEL-735 (Solar Production Meter)
    b. Meter #2 – SEL-735 (21kV directly after Utility Meter)
2) The DAS system collects and send the data to the LocusNOC (On Line Software) via the cellular modem.

CanadianSolar

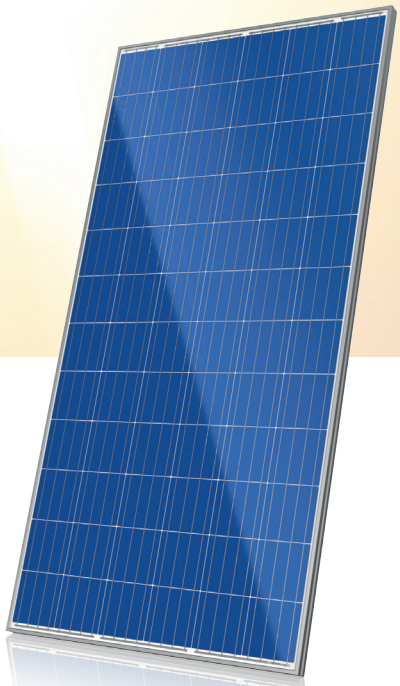

MAX POWER CS6X-300 | 305 | 310P

High quality and reliability in all Canadian Solar modules is ensured by 13 years' experience in module manufacturing, well-engineered module design, stringent BOM quality testing, an automated manufacturing process and 100 % EL testing.

KEY FEATURES

- Excellent module efficiency up to 16.16 %
- Outstanding low irradiance performance > 96.0 %
- +5Wp — Positive power tolerance up to 5 W
- No. 1 PTC — High PTC rating up to 91.94 %
- IP67 — IP67 junction box for long-term weather endurance
- Heavy snow load up to 5400 Pa wind load up to 2400 Pa
- Salt mist, ammonia and blown sand resistance, for seaside, farm and desert environments

25 years — **insurance-backed warranty**
non-cancellable, immediate warranty insurance
linear power output warranty

10 years — **product warranty on materials and workmanship**

MANAGEMENT SYSTEM CERTIFICATES

ISO 9001: 2008 / Quality management system
ISO/TS 16949: 2009 / The automotive industry quality management system
ISO 14001: 2004 / Standards for environmental management system
OHSAS 18001: 2007 / International standards for occupational health & safety

PRODUCT CERTIFICATES

IEC 61215 / IEC 61730: VDE / MCS / CE / SII / KEMCO / CEC AU / CQC / INMETRO
UL 1703 / IEC 61215 performance: CEC listed (US) / FSEC (US Florida)
UL 1703: CSA / IEC 61701 ED2: VDE / IEC 62716: TUV / IEC 60068-2-68: SGS
PV CYCLE (EU) / UNI 9177 Reaction to Fire: Class 1

CANADIAN SOLAR INC. is committed to providing high quality solar products, solar system solutions and services to customers around the world. As a leading manufacturer of solar modules and PV project developer with about 8 GW of premium quality modules deployed around the world since 2011, Canadian Solar Inc. (NASDAQ: CSIQ) is one of the most bankable solar companies worldwide.

CANADIAN SOLAR INC.
545 Speedvale Avenue West, Guelph, Ontario N1K 1E6, Canada, www.canadiansolar.com, support@canadiansolar.com

MODULE / ENGINEERING DRAWING (mm)

Rear View

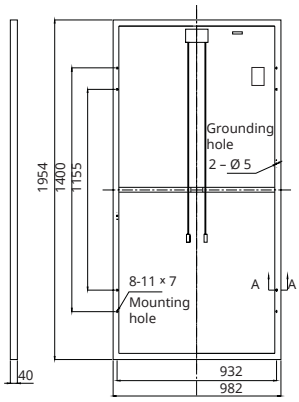

Frame Cross Section A-A

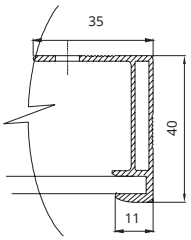

Mounting Hole

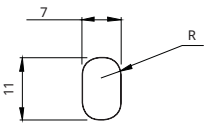

CS6X-305P / I-V CURVES

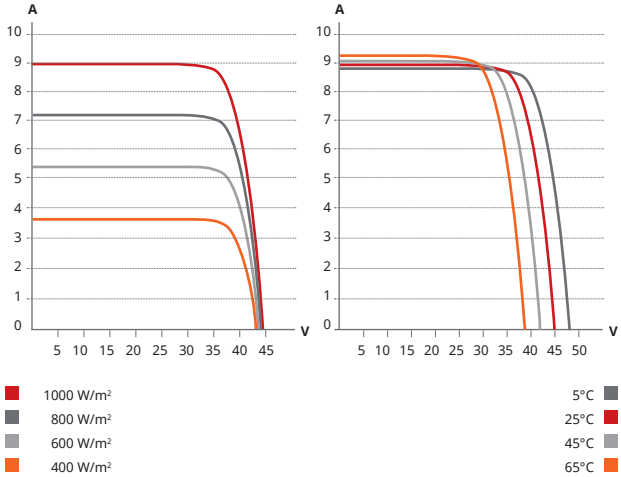

ELECTRICAL DATA / STC*

Electrical Data CS6X	300P	305P	310P
Nominal Max. Power (Pmax)	300 W	305 W	310 W
Opt. Operating Voltage (Vmp)	36.1 V	36.3 V	36.4 A
Opt. Operating Current (Imp)	8.30 A	8.41 A	8.52 A
Open Circuit Voltage (Voc)	44.6 V	44.8 V	44.9 V
Short Circuit Current (Isc)	8.87 A	8.97 A	9.08 A
Module Efficiency	15.63%	15.90%	16.16%
Operating Temperature	-40°C ~ +85°C		
Max. System Voltage	1000 V (IEC) or 1000 V (UL) or 600 V (UL)		
Module Fire Performance	TYPE 1 (UL 1703) or CLASS C (IEC61730)		
Max. Series Fuse Rating	15 A		
Application Classification	Class A		
Power Tolerance	0 ~ + 5 W		

* Under Standard Test Conditions (STC) of irradiance of 1000 W/m², spectrum AM 1.5 and cell temperature of 25°C.

ELECTRICAL DATA / NOCT*

Electrical Data CS6X	300P	305P	310P
Nominal Max. Power (Pmax)	218 W	221 W	225 W
Opt. Operating Voltage (Vmp)	32.9 V	33.1 V	33.2 V
Opt. Operating Current (Imp)	6.61 A	6.68 A	6.77 A
Open Circuit Voltage (Voc)	41.0 V	41.2 V	41.3 V
Short Circuit Current (Isc)	7.19 A	7.27 A	7.36 A

* Under Nominal Operating Cell Temperature (NOCT), irradiance of 800 W/m², spectrum AM 1.5, ambient temperature 20°C, wind speed 1 m/s.

PERFORMANCE AT LOW IRRADIANCE

Industry leading performance at low irradiation, +96.5 % module efficiency from an irradiance of 1000 W/m² to 200 W/m² (AM 1.5, 25°C).

As there are different certification requirements in different markets, please contact your sales representative for the specific certificates applicable to your products. The specification and key features described in this Datasheet may deviate slightly and are not guaranteed. Due to on-going innovation, research and product enhancement, Canadian Solar Inc. reserves the right to make any adjustment to the information described herein at any time without notice. Please always obtain the most recent version of the datasheet which shall be duly incorporated into the binding contract made by the parties governing all transactions related to the purchase and sale of the products described herein.

MODULE / MECHANICAL DATA

Specification	Data
Cell Type	Poly-crystalline, 6 inch
Cell Arrangement	72 (6 × 12)
Dimensions	1954×982×40 mm (76.93×38.7×1.57 in)
Weight	22 kg (48.5 lbs)
Front Cover	3.2 mm tempered glass
Frame Material	Anodized aluminium alloy
J-BOX	IP67, 3 diodes
Cable	4 mm² (IEC) or 4 mm² & 12 AWG 1000 V (UL 1000 V) or 12 AWG (UL 600 V), 1150 mm or 1300 mm**
Connectors	MC4 or MC4 comparable
Stand. Packaging	24 pcs, 608 kg (quantity & weight per pallet)
Module Pieces per Container	528 pcs (40'HQ)

** The CS6X with cable of 1300 mm is only for Canadian market.

TEMPERATURE CHARACTERISTICS

Specification	Data
Temperature Coefficient (Pmax)	-0.43 % / °C
Temperature Coefficient (Voc)	-0.34 % / °C
Temperature Coefficient (Isc)	0.065 % / °C
Nominal Operating Cell Temperature	45±2°C

PARTNER SECTION

CANADIAN SOLAR INC. December 2014. All rights reserved, PV Module Product Datasheet I V5.0_EN

Caution: Please read safety and installation instructions before using the product.

power-one®
A MEMBER OF THE ABB GROUP

AURORA ULTRA®

AURORA ULTRA®

GENERAL SPECIFICATIONS
CENTRAL INVERTERS

ULTRA-750-TL
ULTRA-1100-TL
ULTRA-1500-TL

The AURORA ULTRA inverter is Power-One's high-efficiency, utility-scale solar power inverter.

It combines industry-leading efficiency (maximum 98.4%), 1000Vdc maximum input, and up to four high-speed MPPT channels for optimization of energy harvest. The wide input voltage range (470 to 900 Vdc) gives more hours of energy production. Direct transformerless conversion to 690Vac reduces AC distribution cost. The enclosure houses a closed-loop liquid cooling system and meets NEMA 4X requirements.

Independent, field-replaceable inverter modules maximize reliability, ease maintenance and reduce susceptibility to a single fault. Lower system cost, higher production and easy maintenance combine to make the AURORA ULTRA inverter the choice for utility-scale solar projects.

Features

- Reduced active power rating available (-2, -4 models)
- Compatible with positive-grounded or negative-grounded PV arrays
- Wide input voltage range; 470-900 Vdc
- 690Vac output, 3 phase, DELTA
- High conversion efficiency, 98%
- Advanced high-speed MPPT coupled with efficient inverter module management increases energy harvest
- Environmentally safe closed-loop liquid cooling system
- UL 50E Type 4X (meets NEMA 4X) enclosure for unrestricted use in any environmental conditions
- Modular construction for reduced susceptibility to a single fault and easy access for maintenance
- Ethernet and RS-485 communication interfaces for inverter and string combiner monitoring
- Certified by CSA to UL 1741

Block Diagram and Efficiency Curves

BLOCK DIAGRAM OF ULTRA-1500-TL-OUTD-*x*-US-690

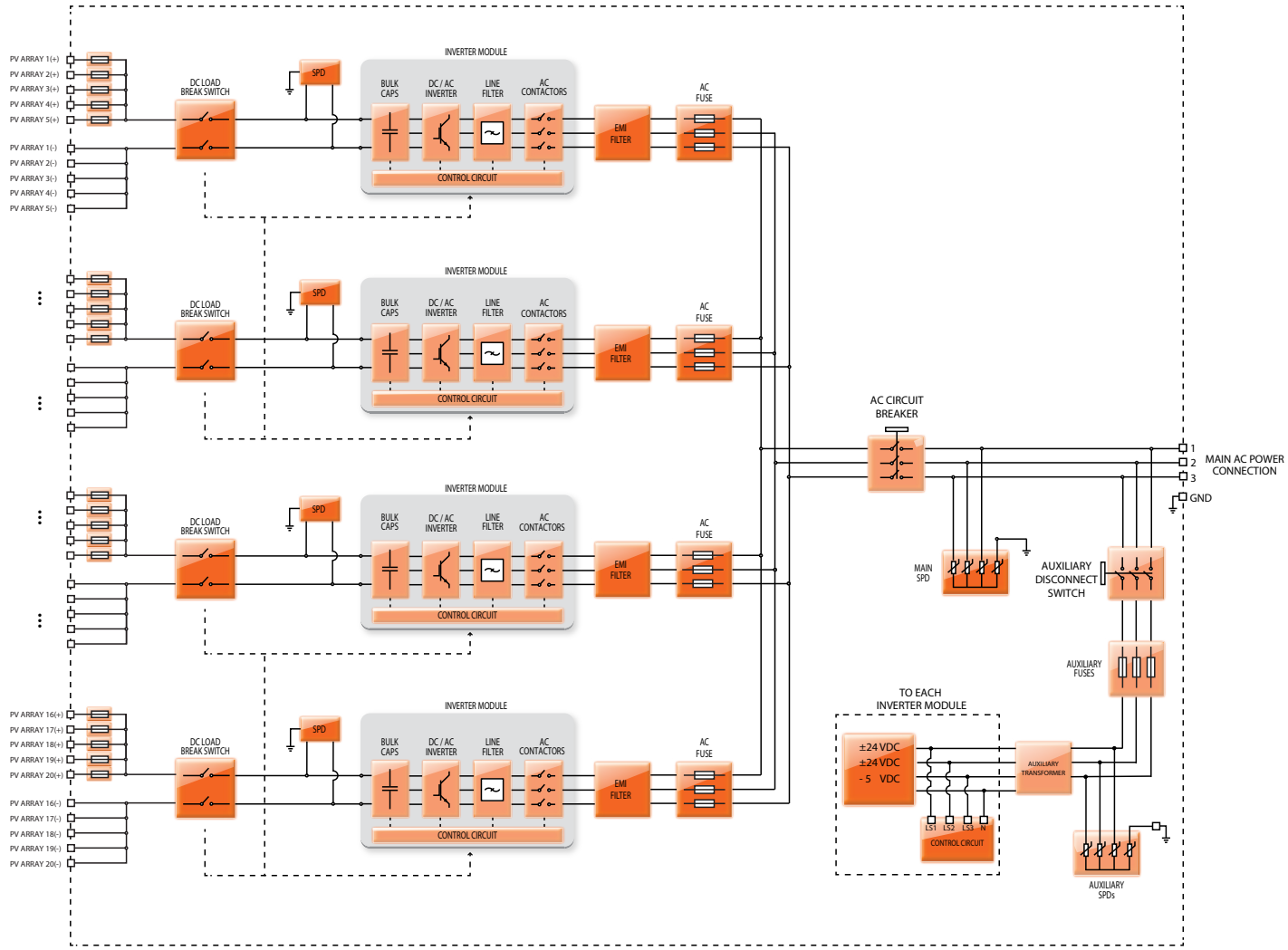

Fusing shown for negatively grounded array

AURORA ULTRA EFFICIENCY

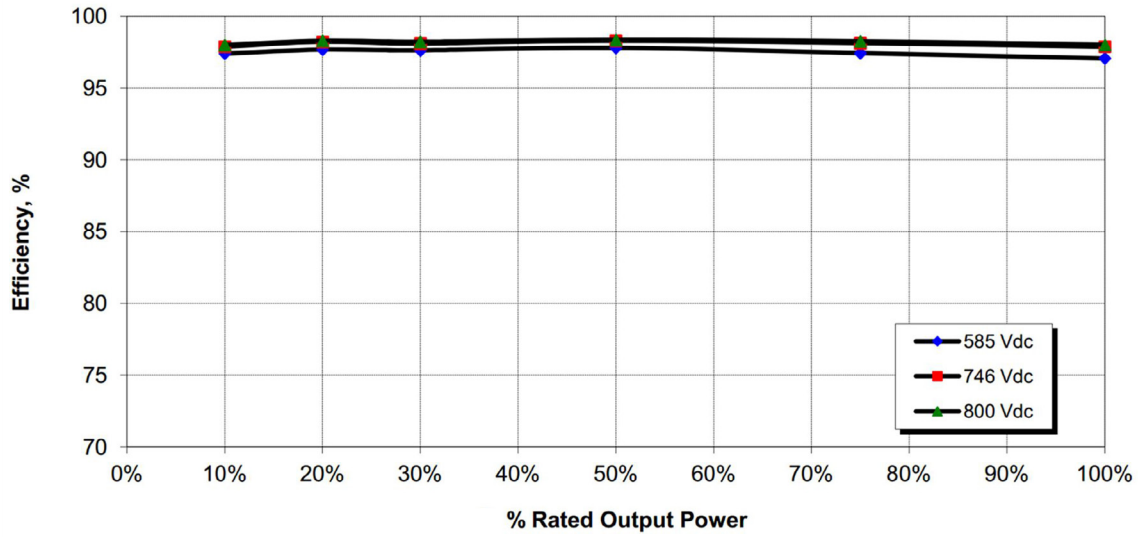

Part Numbering Scheme

PRODUCT LINE	MODEL	NO ISOLATION TRANSFORMER	FOR OUTDOOR USE	POWER OPTION	NORTH AMERICAN MODEL	690Vac 3-PHASE DELTA	STANDARD OPTIONS
ULTRA	-750	-TL	-OUTD	-1	-US	-690	-ABCDE-FGHJKL
	-1100			-2			
	-1500			-3			
				-4			

MODEL	DESCRIPTION
-750	750 or 780kW active power
-1100	1000 or 1170kW active power
-1500	1500 or 1560kW active power

POWER OPTION	DESCRIPTION
-1	active power = apparent power
-2	reduced active power compared to apparent power
-3	increased efficiency, active power = apparent power
-4	increased efficiency, reduced active power compared to apparent power

STANDARD OPTION	DESCRIPTION	AVAILABLE OPTIONS		
A	MPPT	S = Single Master/Slave	D = Dual MPPT*	M = Multiple (>2) MPPT**
B	Grounding	S = Solid	R = Resistive	
C	Array configuration	N = Negative gnd	P = Positive gnd	
D	Fuse Block (max fuse size)	2 = 200 Amps	4 = 400 Amps	
E	Communication	R = Modbus RTU	T = Modbus TCP	I = Ethernet IP
F	Zone level monitoring	1 = Yes	0 = No	
G	Programmable MPPT sweep	1 = Yes	0 = No	
H	IR window	1 = Yes	0 = No	
J	Leakage current monitor	1 = Yes	0 = No	
K	Ground insulation monitor	1 = Yes	0 = No	
L	Cable glands	1 = Yes	0 = No	

* -750 models only, resistive grounding only.
** -1100 and -1500 models only, resistive grounding only.

Power-One Technical Sales has additional information on other features that may be requested at the time of order. For example:

- DC fuse sizes
- A shade awning which may be extended over the front of the inverter, with a grill around the rooftop coolers
- NERC or IEEE1547 utility settings
- Additional DC Disconnect to comply with NEC 2011
- Complete AURORA ULTRA STATION solution with MV transformer

ELECTRICAL SPECIFICATIONS	UNITS	ULTRA-750-TL-OUTD-X-US-690			
		-1	-2	-3	-4
Rated Output Power (Pac) (Real, Active)	kW	780	750	780	750
Rated Output Power (Apparent)	kVA	780			
Input Side (DC)	Values				
Absolute Maximum Voltage	Vdc	1000			
MPPT Voltage Range	Vdc	470-900			
MPPT Range at Full Power (89°F/ 30°C)	Vdc	585-850			
MPPT Range at Full Power (120°F/ 50°C)	Vdc	650-850			
Maximum Current per Inverter Module	A	700			
Maximum Combined Current	A	1400			
Number of Independent MPPT Master (100 Ω Ground)		2			
Number of Independent MPPT Multi-Master/Slave		1			
Number of DC Inputs		Up to 10			
DC Cable Size (Cu or Al)		**Cu**; up to 4/0 or 1000 MCM **Al**; up to 1750 MCM			
Array Grounding		Negative or Positive			
DC Cable Entry		Bottom			
Output Side (AC)					
Rated Voltage	Vac	690 (3 Phase / 3 Wire)			
Operating Range[1]	Vac	607-759 (3 Phase / 3 Wire)			
Grid Frequency (Adjustment Range)	Hz	59.3-60.5 (57-63)			
Maximum Output Current	A	655			
Power Factor Control Range		1.0 Nominal (adjust ±0.90 to ±0.99)			
Total Harmonic Distortion (@ Rated Output Power)	%	<3			
AC Cable Size (Cu or Al)		Up to 6 cables per phase **Cu**; 3/0 to 1000MCM. **Al**; 4/0 to 1750MCM			
AC Cable Entry		Bottom			
Input Protection Devices					
Reverse Polarity Protection		Yes			
Overvoltage Protection		SPD (Class II)			
DC Switch for Each Inverter Module	A/V	1000/1000			
Fuse Size on Each Input	A/V	(125-400)/1000			
PV Array Isolation Control		According to NEC			
Output Protection Devices					
Anti-islanding Protection		IEEE 1547			
Overvoltage Protection		SPD (Class II)			
AC Fuse per Inverter Module		Yes			
AC Circuit Breaker (Adjustable)	A	800			
Night Time Disconnect		Yes, Automatic			
Efficiency					
CEC Efficiency	%	97.5	97.5	98.0	98.0
Maximum Efficiency (25°C)	%	98.4			
Operating Performance					
Stand-by Consumption/ Night-Time Power Loss	W	302	302	347	347
Internal Power Consumption	%	<0.50			
Environmental					
Ambient Temperature Range, Operating	°F(°C)	-4 to 122 (-20 to 50) with derating above 122(50)			
Noise Emission Level @1m (EN62109)	dBA	<78			
Maximum Operating Altitude Without Derating	ft(m)	6560 (2000)			
Relative Humidity	%	0-100, condensing			
Communication					
Communication Protocol		RS-485, Modbus RTU, Modbus TCP (Optional), Ethernet IP (Optional)			
User Interface		5.7" touchscreen LCD			
Monitoring System		AURORA Universal, PVI - AEC - EVO			
AURORA String Combiner		RS-485			
Mechanical Specifications					
Environmental Protection Rating		UL 50E Type 4X (meets NEMA 4X)			
Seismic		IBC 2012 (ASCE 7-10), Sds = 2.0g, Risk Category I and II			
Cooling		Liquid cooled with on-board heat exchanger			
Dimension (Height x Width x Depth)	in mm	115 x 118 x 58 2912 x 3003 x 1470			
Unit Weight (Approximate)	lbs(kg)	9000 (4100)			
Swappable 390kW Inverter Module Weight	lbs(kg)	>121(55)			
Safety					
Marking		$_{C}$CSA$_{US}$			
Safety and EMC Standards		UL 1741, EN50178, EN62109-1, EN61000-6-2, EN61000-6-4, EN61000-3-11, EN61000-3-12			
Utility Interconnect Standards		NERC, BDEW, FERC 661			
Warranty					
Standard Warranty	Years	5			
Extended Warranty	Years	10,15,20			

1. The active / reactive power output varies as a function of output voltage

ULTRA-1100-TL-OUTD-X-US-690			
-1	-2	-3	-4
1170	1000	1170	1000
1170	1115	1170	1115
1000			
470-900			
585-850	540-850	585-850	540-850
650-850			
700			
2100			
3			
2			
Up to 15			
Cu; up to 4/0 or 1000 MCM **Al**; up to 1750 MCM			
Negative or Positive			
Bottom			
690 (3 Phase / 3 Wire)			
607-759 (3 Phase / 3 Wire)			
59.3-60.5 (57-63)			
983	932	983	932
1.0 Nominal (adjust ±0.90 to ±0.99)			
<3			
Up to 6 cables per phase **Cu**; 3/0 to 1000MCM. **Al**; 4/0 to 1750MCM			
Bottom			
Yes			
SPD (Class II)			
1000/1000			
(125-400)/1000			
According to NEC			
IEEE 1547			
SPD (Class II)			
Yes			
1200			
Yes, Automatic			
97.5	97.5	98.0	98.0
98.4			
329	329	382	382
<0.40			
-4 to 122 (-20 to 50) with derating above 122(50)			
<78			
6560 (2000)			
0-100, condensing			
RS-485, Modbus RTU, Modbus TCP (Optional), Ethernet IP (Optional)			
5.7" touchscreen LCD			
AURORA Universal, PVI - AEC - EVO			
RS-485			
UL 50E Type 4X (meets NEMA 4X)			
IBC 2012 (ASCE 7-10), Sds = 2.0g, Risk Category I and II			
Liquid cooled with on-board heat exchanger			
115 x 146 x 58			
2912 x 3703 x 1470			
10500 (4800)			
>121(55)			
$_{C}CSA_{US}$			
UL 1741, EN50178, EN62109-1, EN61000-6-2, EN61000-6-4, EN61000-3-11, EN61000-3-12			
NERC, BDEW, FERC 661			
5			
10,15,20			

ULTRA-1500-TL-OUTD-X-US-690			
-1	-2	-3	-4
1560	1500	1560	1500
1560			
1000			
470-900			
585-850			
650-850			
700			
2800			
4			
2			
Up to 20			
Cu; up to 4/0 or 1000 MCM **Al**; up to 1750 MCM			
Negative or Positive			
Bottom			
690 (3 Phase / 3 Wire)			
607-759 (3 Phase / 3 Wire)			
59.3-60.5 (57-63)			
1310			
1.0 Nominal (adjust ±0.90 to ±0.99)			
<3			
Up to 6 cables per phase **Cu**; 3/0 to 1000MCM. **Al**; 4/0 to 1750MCM			
Bottom			
Yes			
SPD (Class II)			
1000/1000			
(125-400)/1000			
According to NEC			
IEEE 1547			
SPD (Class II)			
Yes			
1600			
Yes, Automatic			
97.5	97.5	98.0	98.0
98.4			
374	374	430	430
<0.50			
-4 to 122 (-20 to 50) with derating above 122(50)			
<78			
6560 (2000)			
0-100, condensing			
RS-485, Modbus RTU, Modbus TCP (Optional), Ethernet IP (Optional)			
5.7" touchscreen LCD			
AURORA Universal, PVI - AEC - EVO			
RS-485			
UL 50E Type 4X (meets NEMA 4X)			
IBC 2012 (ASCE 7-10), Sds = 2.0g, Risk Category I and II			
Liquid cooled with on-board heat exchanger			
115 x 173 x 58			
2912 x 4403 x 1470			
12000 (5500)			
>121(55)			
$_{C}CSA_{US}$			
UL 1741, EN50178, EN62109-1, EN61000-6-2, EN61000-6-4, EN61000-3-11, EN61000-3-12			
NERC, BDEW, FERC 661			
5			
10,15,20			

Ver. 10-4-2013-02.7-NA - Specifications are subject to change without notice.

www.power-one.com

Power-One Renewable Energy Worldwide Sales Offices

Country	Name/Region	Telephone	Email
Australia	Asia Pacific	+61 2 9735 3111	sales.australia@power-one.com
China (Shenzhen)	Asia Pacific	+86 755 2988 5888	sales.china@power-one.com
China (Shanghai)	Asia Pacific	+86 21 5505 6907	sales.china@power-one.com
India	Asia Pacific	+65 6896 3363	sales.india@power-one.com
Singapore	Asia Pacific	+65 6896 3363	sales.singapore@power-one.com
Belgium / The Netherlands / Luxembourg	Europe	+32 2 206 0338	sales.belgium@power-one.com
France	Europe	+33 (0) 141 796 140	sales.france@power-one.com
Germany	Europe	+49 7641 955 2020	sales.germany@power-one.com
Italy	Europe	00 800 00287672 Opt. n°5	sales.italy@power-one.com
Spain	Europe	+34 91 879 88 54	sales.spain@power-one.com
United Kingdom	Europe	+44 1903 823 323	sales.UK@power-one.com
Dubai	Middle East	+971 50 100 4142	sales.dubai@power-one.com
Canada	North America	+1 877 261-1374	sales.canada@power-one.com
USA East	North America	+1 877 261-1374	sales.usaeast@power-one.com
USA Central	North America	+1 877 261-1374	sales.usacentral@power-one.com
USA West	North America	+1 877 261-1374	sales.usawest@power-one.com

Product Datasheet

LGate 350

COMMERCIAL SOLAR MONITORING SOLUTION

Locus Energy's LGate 350 is a performance data acquisition kit for commercial solar photovoltaic systems. Designed to integrate easily into three-phase PV systems of all sizes, the LGate continually collects a multitude of energy and environmental data allowing site owners and operators to efficiently manage solar assets.

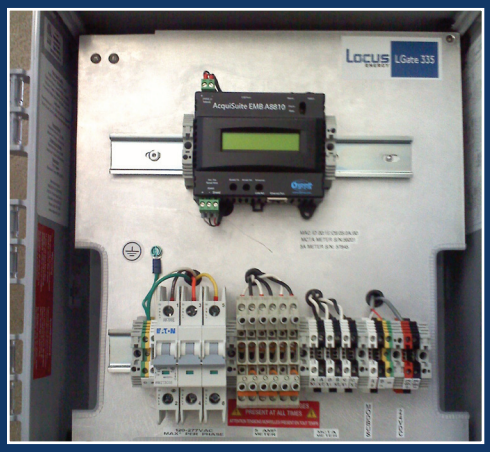

The LGate 350 can be configured to monitor nearly any type of PV system. The standard configuration consists of an industrial grade datalogger and revenue-grade energy meter mounted inside a weatherized enclosure. All LGates are shipped with integrated disconnect breakers making field installation much simpler. In addition, each unit can be configured to aggregate data from a large variety of peripheral devices such as inverters, string/sub-array combiner boxes and weather stations.

DATA COLLECTION

The LGate uses the RS-485 Modbus protocol to communicate with downstream devices. Any device that supports Modbus can be connected and monitored by the LGate. Up to 32 devices can be connected through the Modbus loop. All data is collected, timestamped and then stored in non-volatile memory. This interval data is stored locally until the next scheduled upload.

CONNECTIVITY

Once the LGate collects and stores performance data from connected devices, it will upload batches of data at regular intervals to Locus Energy's SolarOS™ web application. The LGate can transmit data over Ethernet or cellular networks. The integrated datalogger can be set to communicate through almost any type of local area network.

ABOUT LOCUS

Locus Energy develops web-based asset management software for renewable energy systems. We provide monitoring, analytics and data services for deployments of solar photovoltaic and solar thermal technology. By leveraging Locus' products, renewable integrators can drive down the cost and complexity of energy monitoring while making it much easier to maintain and service an installed client base. Founded in 2007, Locus is based in New York City and serves clientele across the world.

SOLUTIONS

Locus Energy offers Smart Monitoring software services tailored to the following groups to help maximize the performance of renewable assets:

- Installers
- Financiers
- Utilities
- OEMs
- Regulators

DIAGRAM – TYPICAL CONFIGURATION

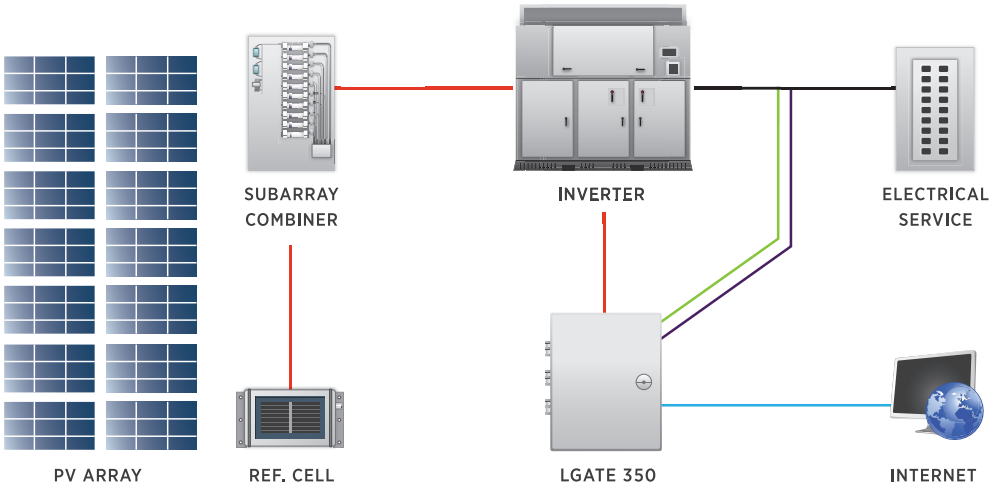

LEGEND

- Shielded RS-485 Wiring
- Current Transducers
- Voltage Reference
- Standard CAT5

DIMENSIONS

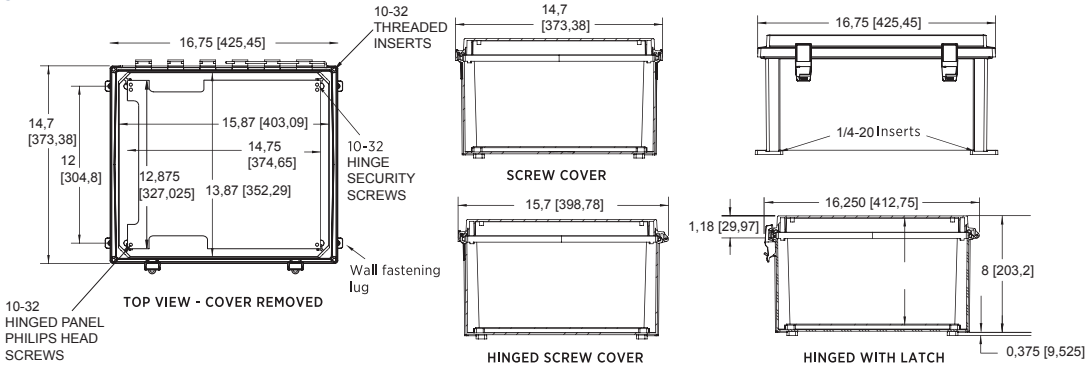

SPECIFICATIONS

DATALOGGER	
Processor	ARM9 embedded CPU
OS	Linux 2.6
Memory	32 MB RAM
Logging interval	5 to 60 minutes, user selectable (default 5 minutes)
Display	2 x 16 LCD character

COMPLIANCE
ANSI C12.20 Class 0.2
IEC 61010 (Safety)
FCC 15 Part B
IEC 60068-2-27 (Mechanical shock)
IEC 60068-2-6 (Mechanical vibration)
CFR 47 ANSI C63.4 (Radiated emissions)
CAN/CSA-C22.2 No. 14 listed Industrial Control Panel
UL Listed 508A listed Industrial Control Panel

COMMUNICATION	
LAN	RJ45 10/100 Ethernet, full half duplex, auto polarity
Cellular (optional)	GSM/CDMA
Networking	DHCP or hard static IP

PHYSICAL	
Enclosure	NEMA 4
Weight	18 lbs
Dimensions	116.75” L x 14.7” W x 8” H
Environment	-30 to 70C, 95% RH, non-condensing

POWER METER	
Voltage Inputs	600/347V, 480/277V, 208/120V
Phases	Single phase, Split phase, Three phase at 50 or 60 Hz
Current Inputs	mV full scale output CTs, mA output solid/split core CTs, 5A from standard CTs

EXHBIT D – SENECA PROCESS FLOW DOCUMENTS & DATA

SENECA RESOURCES

SRC
North MWSS Flow Diagram For LCFS Credit Application

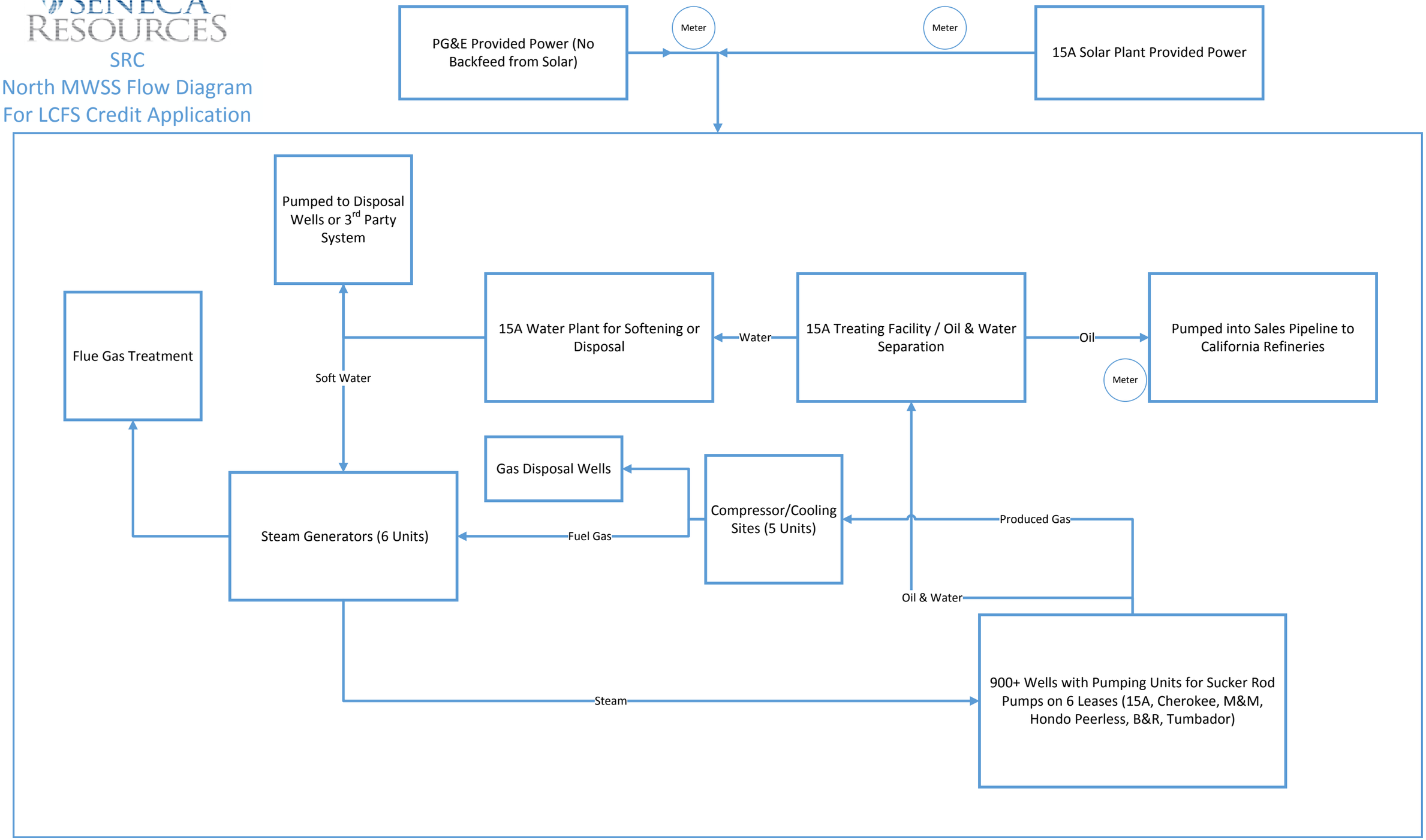

Seneca Resources	
North MWSS Field	
Electrical Usage, Load Count	
LCFS Application for 15A Solar Plant	
	6/20/2016
	Load Count
Oil & Water Producing, Steam Injection, Water Disposal, and Gas Disposal Wells on 6 Leases (15A, Cherokee, M&M, Hondo Peerless (HP), B&R, and Tumbador)	
Wells with pumping units for sucker rod pumps	900
Control Room & Office	1
15A Treating Facility, Oil & Water Seperation	
Heater-Treater blowers	6
FWKO Emulsion Pumps	3
FWKO Water Pumps	2
Tank, transfer pumps	6
Boilers, water charge pumps	3
Air Compressors	2
Tank Vapor Compressor with pump	2
Control Building	1
15A Oil Sales & Shipping to California Refineries	
Charge Pump	1
Shipping Pump	1
15A Water Plant, Softening or Disposal	
Filter Inlet Pumps	3
Softener Inlet Pumps	3
Drain Water Recovery & Skim Pumps	4
Salt Brine Pumps	2
Disposal Pumps	6
Air Compressors	2
Soft Water Transfer Pumps	3
Treated water pump for well control	3
Control Building	1
Produced Gas Gathering Sites (5 units)	
Ro-Flo Compressor	5
Cooler fans	12
Condensate pumps	10
Air Compressors	3
3-phase vessel, condensate pumps	2
Steam Generators (6 units)	
Charge Pump	6
Feedwater Pump	6
Blower	6
Air Compressors	3
Flue Gas Treatment	
Scrubber Pumps	4
Water pump to cool gas	1
Scrubbers, make-up water pump	2
Scrubbers flush pump	1
Soda Ash Tank pumps	3
Air Compressor	1
Disposal Pumps	2
Control Building with MCC	1
Total Load Count:	**1023**

DOGGR Comparison	
DOG Produced Barrels	**Totals**
County Code 029	188,145
County Code 030	1,820,779
Total	2,008,924
Seneca - Production Barrels by Field	**Totals**
MWSS South	539,701
MWSS North	1,442,809
Ripley	26,411
Total	2,008,922
Minor Difference	2

EXHIBIT E – GPS MAP

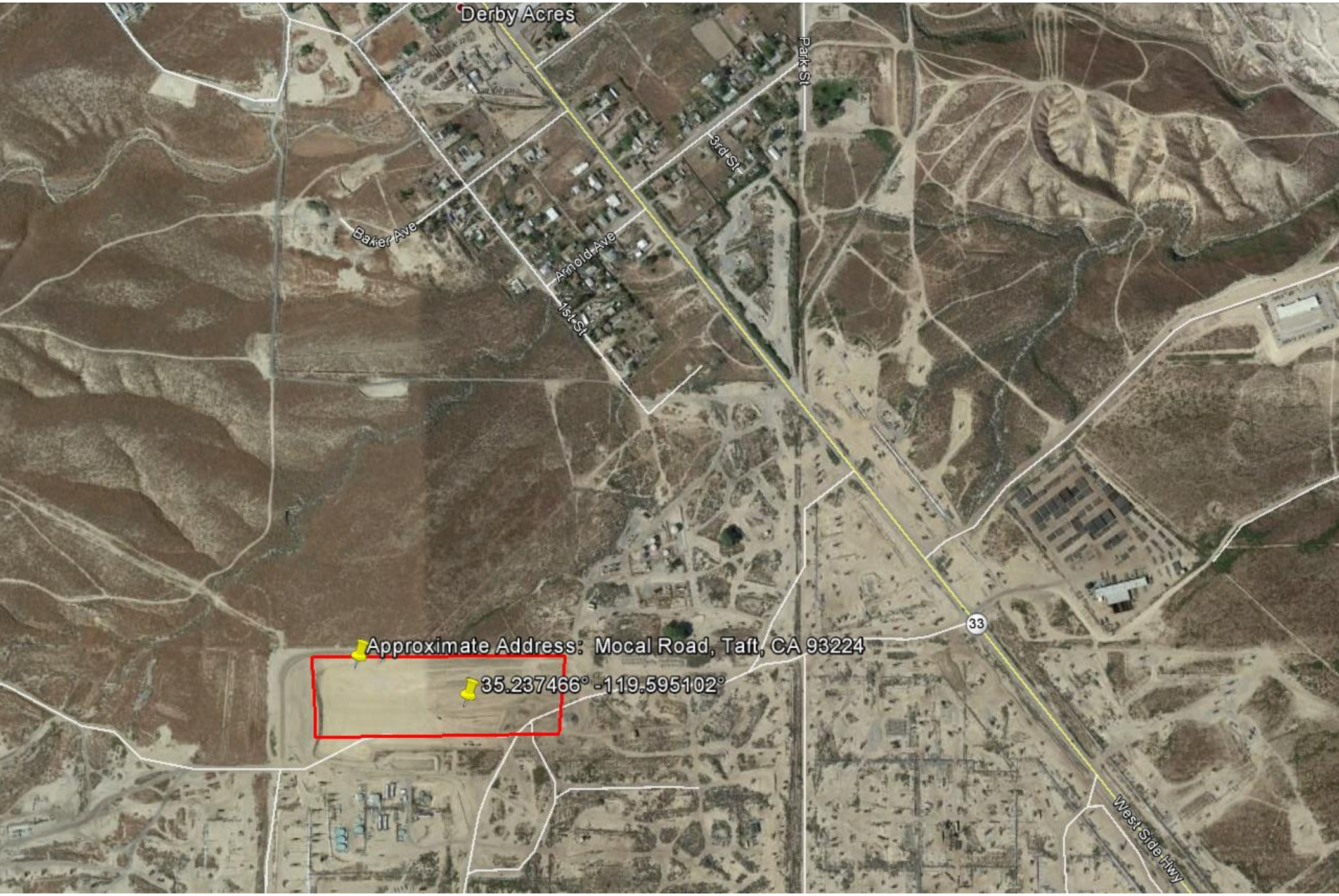
Derby Acres
Park St
3rd St
Baker Ave
Arnold Ave
1st St
33
Approximate Address: Mocal Road, Taft, CA 93224
35.237466° -119.595102°
West Side Hwy