CALIFORNIA
AIR RESOURCES BOARD

California Vehicle Fill Pipe Specifications

Proposed Amendments

May 23, 2018

How does fill pipe design impact overpressure?

Drain Hole

- 2015 CARB testing:
  - >1000 consumer fueling events
  - Certain vehicles frequently had high Vapor to Liquid (V/L)
- Capless fill pipes:
  - Drain Holes
- Capped fill pipes:
  - Deep locking lip requiring large force to latch nozzle
- Both capless and capped:
  - Items in access zone blocking nozzle sealing

Plans for Improvements

CHANGES TO THE SPECIFICATIONS

Collaboration with SAE and industry

- SAE Refueling Interface Task Force
  - Auto, nozzle, and fill pipe manufacturers
  - Assisted with developing many of the planned changes
  - Performed testing to support new standards and dimensions

Goal: Restrict Open Ports to Atmosphere

Proposed change: add performance standard

- Tests quality of nozzle seal to fill pipe (interface)
- Compliance method:
  - Bench test (surrogate to gas station testing)

Changed since Dec 2017 workshop

- Removed V/L and Zero-leak Attestation options: since no industry interest

Summary: Bench Test Standard Development

2) 1.6 mm: Adjusted w/ safety factor to account for recirc, etc

1) Orifice testing at gas station: 2.5 mm: Max orifice for V/L <0.5

Bench Test Standard

3) Standard is 2.5 slpm MAX @ 500 Pa vacuum, (leak rate for 1.6 mm orifice)

CARB's Bench Test Method + Equipment

- Adjust vacuum supply: -500 Pascal @ pressure gage
- Output = leak rate in liters per minute @ flow meter
  - Compare with standard: 2.5 liters per minute

No changes since December 2017 workshop

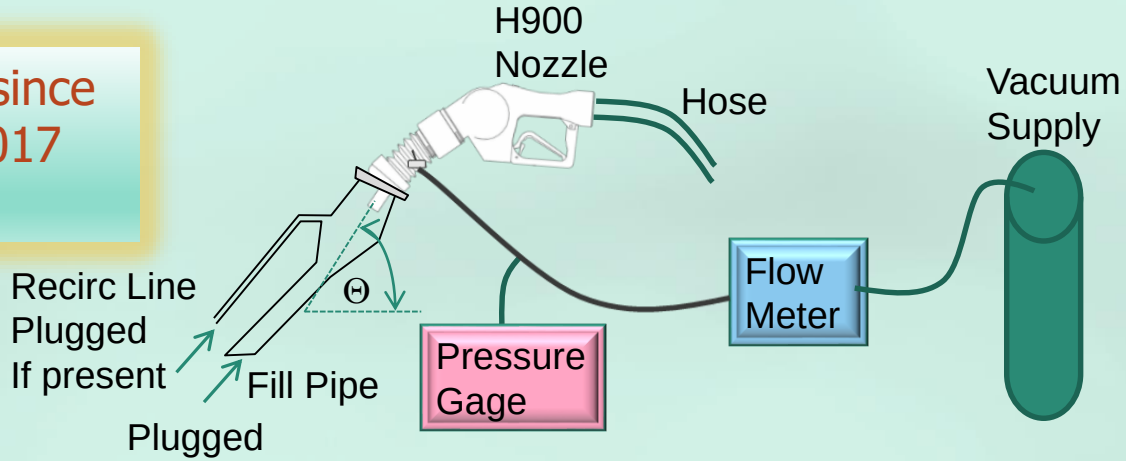

DIMENSIONAL CHANGES

Access Zone Update: Why its needed

Boot overlaps fill pipe

Access Zone Update Plan

- Clarify and improve fill pipe's access zone
  - To represent today's nozzles
- Adds to current access zone in ISO 13331
- Purpose of access zone:
  - Leave space on vehicle for nozzle insertion
- The change makes room for concave nozzle boot
  - Allows boot to overlap fill pipe
  - Enable boot to seal with fill pipe
- Working with SAE Refueling Interface Task Force

Revision:
May 2018

Changed since Dec 2017 workshop

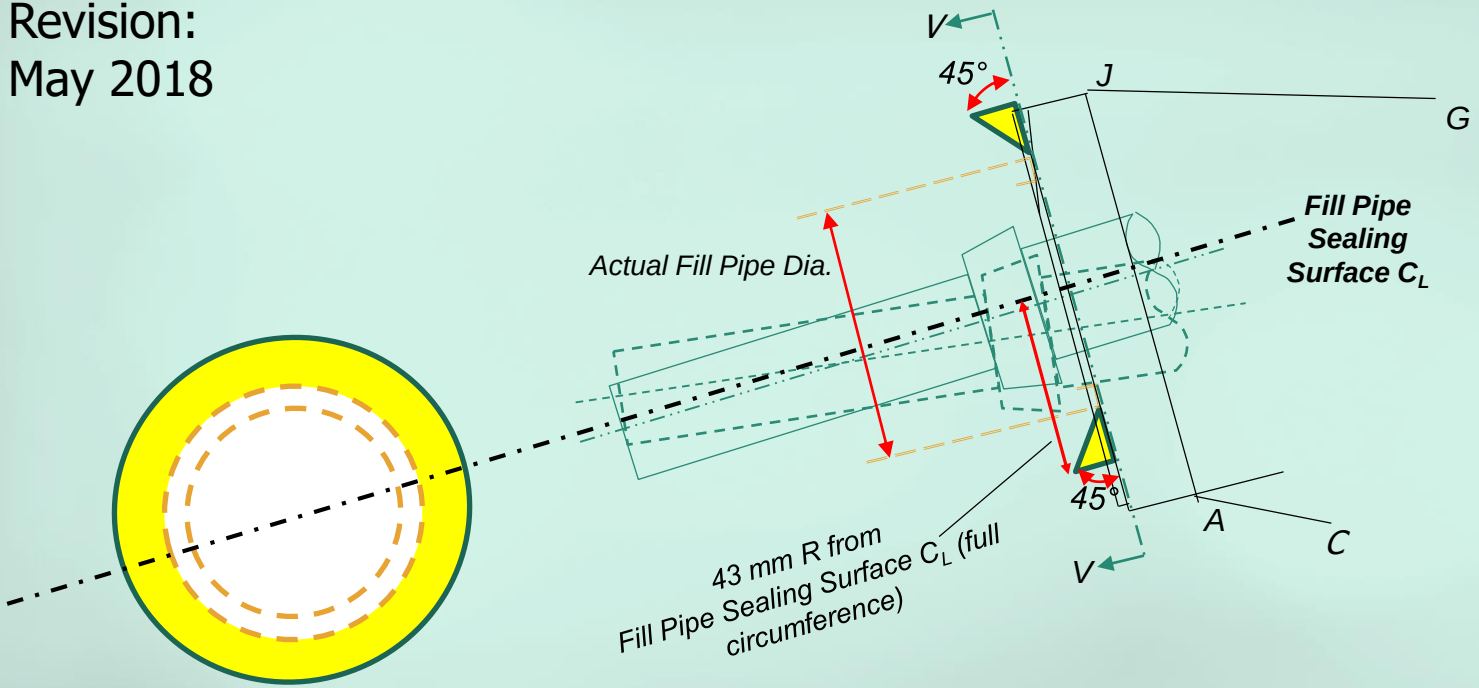

Section V-V

Additional clearance to ISO 13331 access zone, proposed by CARB

Access Zone Update will affect:

Fill Pipe With Outer Ring

- A current design on some cars

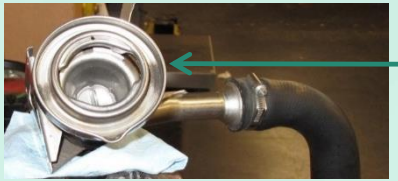

Outer ring

Two different insertion scenarios:

1. Boot butts up against outer ring

2. Boot fits within outer ring

- Operator dependent

Locking Lip Depth

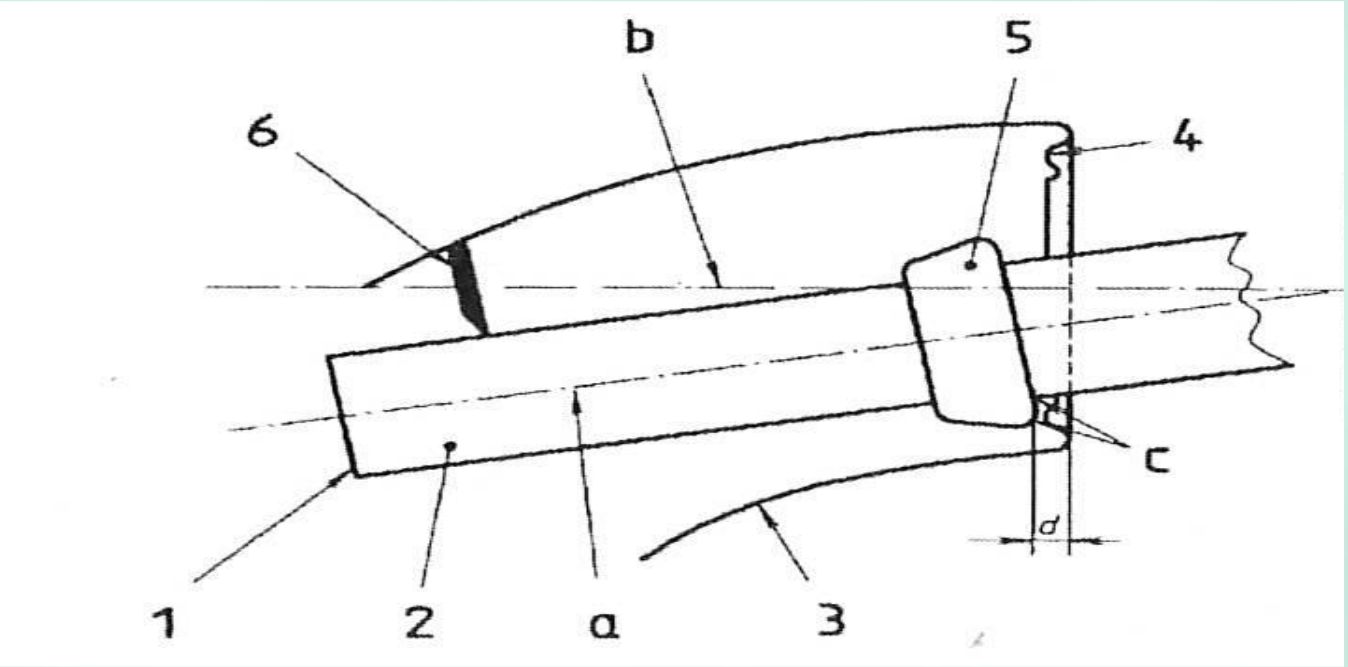

Example: Latched Nozzle

Locking Lip Depth Update

Goal: reduce "loose latching"

- Current: 4-13 mm
- Planned change: 4-10 mm
- Easier to latch nozzle
- Insertion force increases dramatically > 10 mm
  - Source: SAE nozzle insertion study

No changes since December 2017 workshop

SAE nozzle insertion study

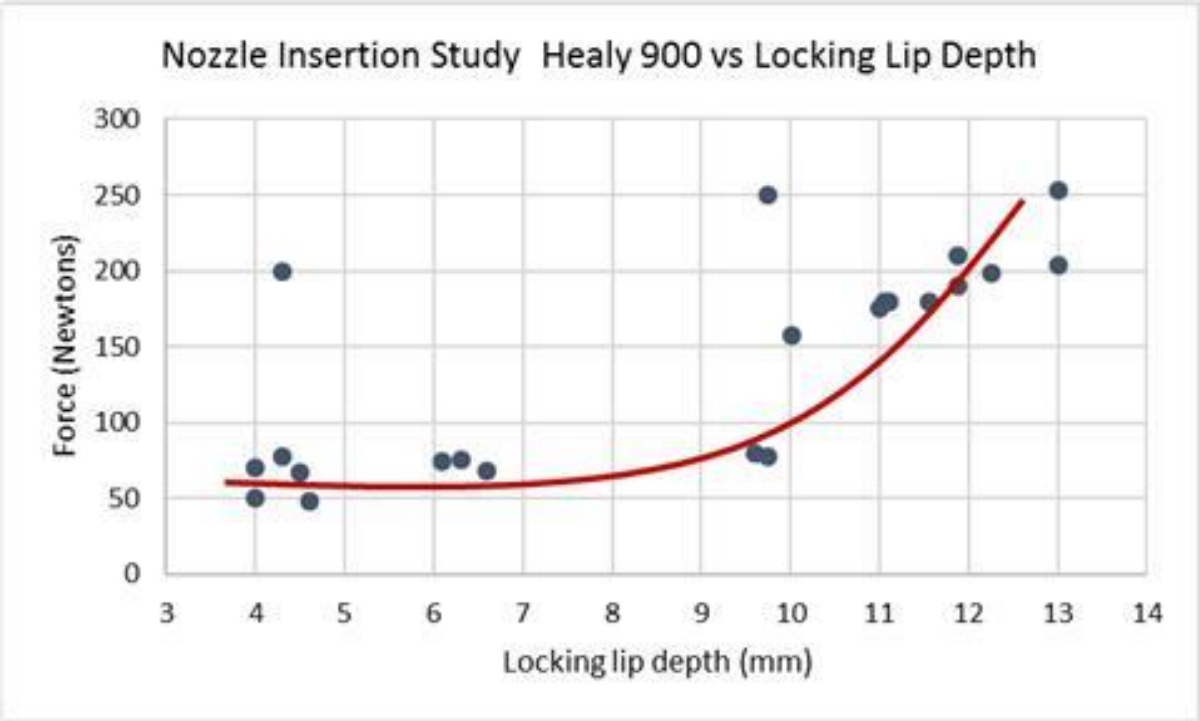

Added after Dec 2017 workshop

Modify J1114's Alternate Shape

- Current Outer Diam. (OD) is too large (up to 61.6 mm)
- Results in about 1.7 mm of additional boot compression
  - Since contacts higher on conical boot
- Contributes to loose latching
- Proposal: Reduce OD to 57.9 mm (max)
  - Match with standard J1114
  - Very similar to ISO 13331

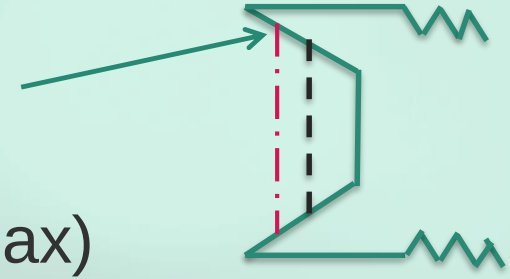

Proposing to bring back Spitback

History:

- Used to be a CA requirement prior to 2014
- CARB aligned with US EPA in 2014 and removed
  - Basis: Current ORVR testing is sufficient
- This was a mistake, since ORVR is tested with a nozzle w/o vapor recovery
- Using both assist and balance type nozzles
  - For testing Spitback and Pre-Mature Shut-off

Implementation

Changed since Dec 2017 workshop

- Proposed Phase-In*:

Model Year:	% of Fleet:
2022	25%
2023	50%
2024	100%

*Spitback effective MY 2022 on 100% of fleet

For More Information:

- Vehicle Fill Pipe:
  - Jason Gordon Jason.Gordon@arb.ca.gov
    (626) 575-7068

  - Draft Proposed Regulation Language:
    https://www.arb.ca.gov/msprog/evap/evap.htm
    In the “What’s New” section

  - CARB current CA Fill Pipe Specifications:
    https://www.arb.ca.gov/msprog/onroad/cert/ldctp/ldctp.htm#fillpipe