State of California
AIR RESOURCES BOARD

EXECUTIVE ORDER A-6-165
Relating to Certification of New Motor Vehicle Engines

GENERAL MOTORS CORPORATION

Pursuant to the authority vested in the Air Resources Board by Sections 43100, 43102, and 43103 of the Health and Safety Code; and

Pursuant to the authority vested in the undersigned by Sections 39515 and 39516 of the Health and Safety Code and Executive Order G-45-3;

IT IS ORDERED AND RESOLVED: That the following General Motors Corporation 1980 model-year gasoline engines are certified for use in motor vehicles with a manufacturer's gross vehicle weight rating greater than 8500 pounds:

Engine Family	Displacement Cubic Inches	Exhaust Emission Control Systems (Special Features)
GM 112	292	Air Injection
GM 113	350, 400	Air Injection
GM 114	366, 427, 454	Air Injection
GM 115	454	Air Injection

Engine Models and Codes as listed on attachments.

Section 43200, Part 5, Division 26 of the California Health and Safety Code requires that the engine manufacturer furnish a decal with each engine sold or delivered to a vehicle manufacturer. The decal shall display the applicable model year heavy-duty engine exhaust emission standards and the following certification emission values:

Engine Family	Hydrocarbons gm/bhp-hr	Carbon Monoxide gm/bhp-hr	Hydrocarbons + Nitrogen Oxides gm/bhp-hr
GM 112	0.1	16	5.6
GM 113	0.5	19	5.5
GM 114	0.3	18	5.6
GM 115	0.5	21	5.4

BE IT FURTHER RESOLVED: That General Motors Corporation has provided to the Executive Officer all material required to demonstrate certification compliance with the Board's emission control system warranty regulations (Title 13, California Adminstrative Code, Section 2036).

Engines certified under this Executive Order must conform to all applicable California emission regulations.

The Bureau of Automotive Repair will be notified by copy of this order and attachment.

Executed at El Monte, California this 3rd day of August, 1979.

K. D. Drachand, Acting Chief
Mobile Source Control Division

1980 AIR RESOURCES BOARD SUPPLEMENTAL DATA SHEET

Manufacturer GENERAL MOTORS CORPORATION Executive Order No. A-6-165 Page 1

Engine Family GM 112,113,114,115 Engine (CID) 292, 350/400, 366/427/454, 454

ABBREVIATIONS

Ignition System
CA-Centrifugal Advance
EEC-Electronic Engine Control
EI-Electronic Ignition
ESAC-Electronic Spark Advance Control
VA-Vacuum Advance
VR-Vacuum Retard

Fuel System
EFI, MFI
nV-nVenturi Carburetor
VV-Variable Venturi

Exhaust Emissions Control System
AI-Air Injection
CL-Closed Loop
EGR-Exhaust Gas Recirculation
EM-Engine Modification
OC-Oxidation Catalyst
PAI-Pulse Air Injection
TR-Thermal Reactor
TWC-Three Way Catalyst

Special Features
CCAV-Combustion Chamber Air Valve
EFI-Electronic Fuel Injection
MFI-Mechanical Fuel Injection
TC-Turbo Charged

Issued: 080379.

1479

E.O. #A-6-165

1980 AIR RESOURCES BOARD SUPPLEMENTAL DATA SHEET
HEAVY-DUTY GASOLINE ENGINES

Manufacturer GENERAL MOTORS CORPORATION Page 2

Engine Family GM 112 CID-Type 292-L6 Eng. Code

ECS(Special Features) AI

Engine Model (Engine Code)	Ignition System EI, CA, VA Delco Remy Distrib. Part Number	Fuel System 1V Rochester Carb. Part Number	EGR Valve Part Number	Label Ident. Part No. Code	Page No.
L25 (3)	1110753	17080309 17080359	None	14015410 XK	6

Date of Issue - 080379. Carb. PN 17080009 deleted, to correct error, on 092479.

050479

E.O. #A -6-165

1980 AIR RESOURCES BOARD SUPPLEMENTAL DATA SHEET
HEAVY-DUTY GASOLINE ENGINES

Manufacturer GENERAL MOTORS CORPORATION Page 3

Engine Family GM 113 CID-Type 350/400 - V8 Eng. Code

ECS(Special Features) AI

Engine Model (Engine Code) CID	Ignition System EI Delco Remy Distrib. Part Number(Adv.)	Fuel System Roch./Bay City Carb. Part Number	EGR Valve Part Number	Label Ident. Part No. Code	Page No.
LF5 (8) 350	1103378 (CA)	17080420 17080424 2V	None	2052402 LF5/NB4	6
LF5 (9) 350		17080423 2V			
LT9 (11) 350	1103420 (CA/VA)	17080513 17080515 17080507 4V		14020655 WF	7
LE4 (12) 400		17080529 17080511 4V		14020657 WJ	7

Date of Issue - 080379. Carb. PN 17080120, 126, 127 & 129 deleted, to correct errors, on 092479. Carburetors 17080507 & 511 added to EC 11 & 12 by letter MH-OP076, on 112679.

E.O. #A -6-165

1980 AIR RESOURCES BOARD SUPPLEMENTAL DATA SHEET
HEAVY-DUTY GASOLINE ENGINES

Manufacturer GENERAL MOTORS CORPORATION Page 4

Engine Family GM 114 CID-Type 366/427/454-V8

ECS(Special Features) AI

Engine Model (Engine Code)	Ignition System EI, CA Delco-Remy Distrib. Part Number	Fuel System 4V Holley Carb. Part Number	EGR Valve Part Number	Label Ident. Part No. Code	Page No.
L86 (7) 366	1103377	2047671 2047672	None	2052408 L86/NB4	8
L43 (8) 427		2047680 2047684		2052406 L43/NB4	8
L42 (9) 454		2047687		2052412 L42/NB4	9

Date of Issue - 080379.

050479

E.O. #A -6-165

1980 AIR RESOURCES BOARD SUPPLEMENTAL DATA SHEET
HEAVY-DUTY GASOLINE ENGINES

Manufacturer GENERAL MOTORS CORPORATION Page 5

Engine Family GM 115 CID-Type 454-V8 Eng. Code

ECS(Special Features) AI

Engine Model (Engine Code)	Ignition System EI, CA, VA Delco Remy Distrib. Part Number	Fuel System 4V Rochester Carb. Part Number	EGR Valve Part Number	Label Ident. Part No. Code	Page No.
LE8 (2)	1103376	17080512	None	14015420 XY	9

Date of Issue - 080379. Carb. PN 17080212 deleted, to correct error, on 092479.

1980 AIR RESOURCES BOARD SUPPLEMENT DATA SHEET

Manufacturer: General Motors Corporation Executive Order No. A-6-165 Pg. 6

XK

ENGINE EXHAUST EMISSION CONTROL INFORMATION

GENERAL MOTORS CORPORATION

SET PARKING BRAKE AND BLOCK DRIVE WHEELS. MAKE ADJUSTMENTS WITH ENGINE AT NORMAL OPERATING TEMPERATURE. CHOKE FULL OPEN. AIR CLEANER INSTALLED AND AIR CONDITIONING OFF. PUT TRANSMISSION IN PARK OR NEUTRAL FOR ALL SETTINGS. (1) DISCONNECT AND PLUG VACUUM HOSE AT DISTRIBUTOR. SET IGNITION TIMING AT IDLE RPM. UNPLUG AND RECONNECT VACUUM HOSE AT DISTRIBUTOR. (2) DISCONNECT AND PLUG CANISTER PURGE HOSE AND CANISTER PURGE SIGNAL HOSE AT VAPOR CANISTER. (3) ADJUST IDLE MIXTURE BY LEAN DROP PROCEDURE IF REQUIRED. (4) ADJUST IDLE SPEED TO SPECIFIED RPM. (5) ADJUST THROTTLE RETURN CONTROL SPEED TO SPECIFIED RPM. (6) ADJUST FAST IDLE SPEED WITH LEVER ON HIGH STEP OF CAM. (7) UNPLUG AND RECONNECT CANISTER PURGE HOSE AND CANISTER PURGE SIGNAL HOSE TO VAPOR CANISTER.

ENGINE FAMILY	ENG. DISP.	EMISSION CONTROL	IDLE RPM	TIMING	FAST IDLE RPM	SPARK PLUG GAP (IN.)	LEAN DROP IDLE MIXTURE RPM	THROTTLE RETURN CONTROL RPM	VALVE LASH
112	4.8 LITER	AIR	700	8° BTC	2400	0.035	775-700	1500	HYD.

DATE OF MANUFACTURE FOR THIS ENGINE IS NOTED ON OTHER ENGINE EXHAUST EMISSION CONTROL INFORMATION LABEL.

NOTE: IDLE MIXTURE SCREW IS PRESET AND CAPPED AT FACTORY. IF MAJOR ADJUSTMENT IS REQUIRED, MIXTURE MAY BE RESET USING LEAN DROP METHOD PER SERVICE MANUAL.

SEE SERVICE MANUAL, MAINTENANCE SCHEDULE AND EMISSION HOSE ROUTING DIAGRAM FOR ADDITIONAL INFORMATION. FUEL REQUIREMENTS – USE 91 OCTANE OR HIGHER

THIS ENGINE CONFORMS TO U.S. EPA AND CALIFORNIA REGULATIONS APPLICABLE TO 1980 MODEL YEAR NEW HEAVY-DUTY GASOLINE ENGINES.

PT. NO. 14015410

PRINTED IN U.S.A.

XK EMISSION HOSE ROUTING

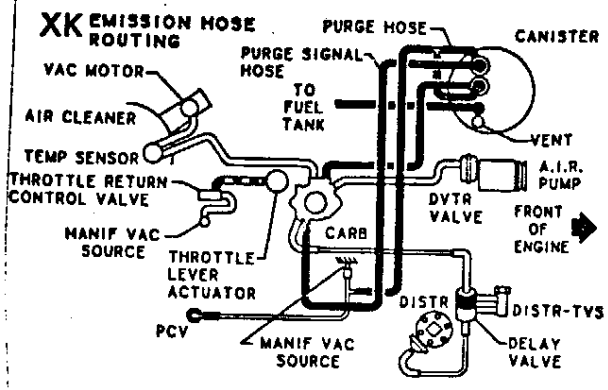

LF5/NB4

ENGINE EXHAUST EMISSION CONTROL INFORMATION GENERAL MOTORS CORPORATION

GM

SET PARKING BRAKE AND BLOCK DRIVE WHEELS. MAKE ADJUSTMENTS WITH ENGINE AT NORMAL OPERATING TEMPERATURE, CHOKE FULL OPEN, AIR CLEANER INSTALLED, TRANSMISSION IN NEUTRAL, AND AIR CONDITIONING ON, IF EQUIPPED.

1. SET TIMING WITH ENGINE RUNNING AT 700 RPM OR LESS.
2. ADJUST IDLE SPEED (SOLENOID ENERGIZED, IF EQUIPPED) TO OBTAIN SPECIFIED IDLE RPM.
3. ADJUST THROTTLE RETURN CONTROL (TRC) SPEED TO SPECIFIED TRC RPM.

NOTE: IDLE MIXTURE SCREWS ARE PRESET AND CAPPED AT FACTORY. IF MAJOR ADJUSTMENT IS REQUIRED, MIXTURE MAY BE RESET USING LEAN DROP METHOD DESCRIBED IN SERVICE MANUAL.

A.I.R. SYSTEM

GM 113 FAMILY

LITER DISPL	5.7
SPARK PLUG TYPE	R44T
SPARK PLUG GAP	0.045 IN
IDLE RPM	700
TRC RPM WITH GOV	1400
TRC RPM NON GOV	1500
TIMING WITH GOV	4° BTDC
TIMING NON GOV	2° BTDC
VALVE LASH	HYD.
LEAN DROP RPM	750

FUEL REQUIREMENTS: USE 91 OCTANE OR HIGHER

SEE SERVICE MANUAL AND MAINTENANCE SCHEDULE FOR ADDITIONAL INFORMATION.

VACUUM HOSE ROUTING

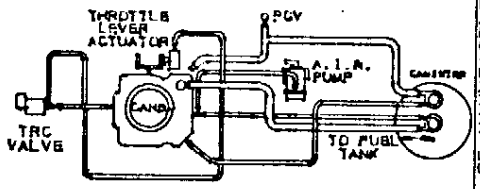

FRONT OF ENGINE

PRINTED IN U.S.A.

THIS ENGINE CONFORMS TO U.S. EPA AND CALIFORNIA REGULATIONS APPLICABLE TO 1980 MODEL YEAR GASOLINE FUELED HEAVY DUTY ENGINES

PART NO 2052402

DATE OF MANUFACTURE

YEAR 1978 | YEAR 1980

MONTH 1 2 3 4 5 6 7 8 9 10 11 12 | 1 2 3 4 5 6 7 8 9 10 11 12

E.O. No. A-6-165
E.Fam. 112,113,114,115
S.D. Sheet 6

Issued: 080379.

WF

ENGINE EXHAUST EMISSION CONTROL INFORMATION

GENERAL MOTORS CORPORATION

SET PARKING BRAKE AND BLOCK DRIVE WHEELS. MAKE ADJUSTMENTS WITH ENGINE AT NORMAL OPERATING TEMPERATURE, CHOKE FULL OPEN, AIR CLEANER INSTALLED AND AIR CONDITIONING OFF. PUT TRANSMISSION IN PARK OR NEUTRAL FOR ALL SETTINGS. (1) DISCONNECT AND PLUG VACUUM HOSE AT DISTRIBUTOR. SET IGNITION TIMING AT IDLE RPM. UNPLUG AND RECONNECT VACUUM HOSE AT DISTRIBUTOR. (2) DISCONNECT AND PLUG CANISTER PURGE HOSE AND CANISTER PURGE SIGNAL HOSE AT VAPOR CANISTER. (3) ADJUST IDLE SPEED TO SPECIFIED RPM. (4) ADJUST THROTTLE RETURN CONTROL SPEED TO SPECIFIED RPM. (5) ADJUST FAST IDLE SPEED WITH LEVER ON HIGH STEP OF CAM. (6) UNPLUG AND RECONNECT CANISTER PURGE HOSE AND CANISTER PURGE SIGNAL HOSE TO VAPOR CANISTER.

ENGINE FAMILY	ENG. DISP.	EMISSION CONTROL	IDLE RPM	TIMING	FAST IDLE RPM	SPARK PLUG GAP (IN.)	THROTTLE RETURN CONTROL RPM	VALVE LASH
113	5.7 LITER	AIR	700	6° BTC	1900	0.045	1500	HYD.

DATE OF MANUFACTURE FOR THIS ENGINE IS NOTED ON OTHER ENGINE EXHAUST EMISSION CONTROL INFORMATION LABEL.

NOTE IDLE MIXTURE SCREWS ARE PRESET AND SEALED AT FACTORY. IF MAJOR ADJUSTMENT IS REQUIRED, MIXTURE MAY BE RESET USING THE BEST IDLE MIXTURE METHOD PER SERVICE MANUAL.

SEE SERVICE MANUAL, MAINTENANCE SCHEDULE AND EMISSION HOSE ROUTING DIAGRAM FOR ADDITIONAL INFORMATION. FUEL REQUIREMENTS - USE 91 OCTANE OR HIGHER

THIS ENGINE CONFORMS TO U.S. EPA AND CALIFORNIA REGULATIONS APPLICABLE TO 1980 MODEL YEAR NEW HEAVY-DUTY GASOLINE ENGINES.

PT. NO. 14020655

PRINTED IN U.S.A.

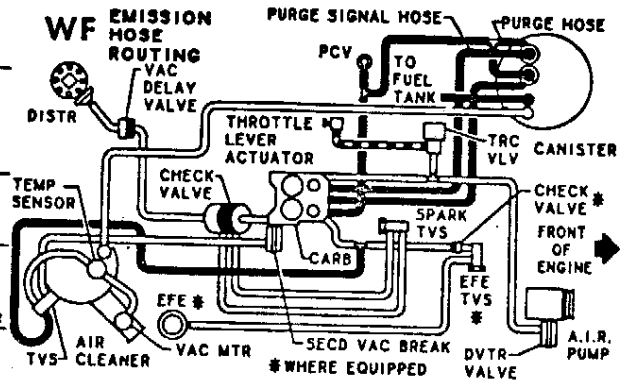

WJ

ENGINE EXHAUST EMISSION CONTROL INFORMATION

GENERAL MOTORS CORPORATION

SET PARKING BRAKE AND BLOCK DRIVE WHEELS. MAKE ADJUSTMENTS WITH ENGINE AT NORMAL OPERATING TEMPERATURE, CHOKE FULL OPEN, AIR CLEANER INSTALLED AND AIR CONDITIONING OFF. PUT TRANSMISSION IN PARK OR NEUTRAL FOR ALL SETTINGS. (1) DISCONNECT AND PLUG VACUUM HOSE AT DISTRIBUTOR. SET IGNITION TIMING AT IDLE RPM. UNPLUG AND RECONNECT VACUUM HOSE AT DISTRIBUTOR. (2) DISCONNECT AND PLUG CANISTER PURGE HOSE AND CANISTER PURGE SIGNAL HOSE AT VAPOR CANISTER. (3) ADJUST IDLE SPEED TO SPECIFIED RPM. (4) ADJUST THROTTLE RETURN CONTROL SPEED TO SPECIFIED RPM. (5) ADJUST FAST IDLE SPEED WITH LEVER ON HIGH STEP OF CAM. (6) UNPLUG AND RECONNECT CANISTER PURGE HOSE AND CANISTER PURGE SIGNAL HOSE TO VAPOR CANISTER.

ENGINE FAMILY	ENG. DISP.	EMISSION CONTROL	IDLE RPM	TIMING	FAST IDLE RPM	SPARK PLUG GAP (IN.)	THROTTLE RETURN CONTROL RPM	VALVE LASH
113	6.6 LITER	AIR	700	6° BTC	1900	0.045	1500	HYD.

DATE OF MANUFACTURE FOR THIS ENGINE IS NOTED ON OTHER ENGINE EXHAUST EMISSION CONTROL INFORMATION LABEL.

NOTE IDLE MIXTURE SCREWS ARE PRESET AND SEALED AT FACTORY. IF MAJOR ADJUSTMENT IS REQUIRED, MIXTURE MAY BE RESET USING THE BEST IDLE MIXTURE METHOD PER SERVICE MANUAL.

SEE SERVICE MANUAL, MAINTENANCE SCHEDULE AND EMISSION HOSE ROUTING DIAGRAM FOR ADDITIONAL INFORMATION. FUEL REQUIREMENTS - USE 91 OCTANE OR HIGHER

THIS ENGINE CONFORMS TO U.S. EPA AND CALIFORNIA REGULATIONS APPLICABLE TO 1980 MODEL YEAR NEW HEAVY-DUTY GASOLINE ENGINES.

PT. NO. 14020657

PRINTED IN U.S.A.

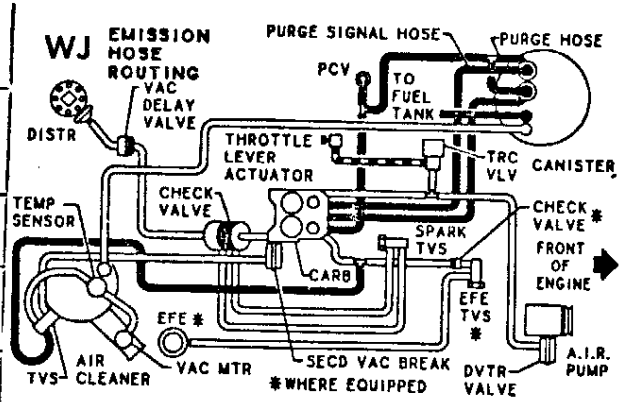

1980 AIR RESOURCES BOARD SUPPLEMENT DATA SHEET

Manufacturer: General Motors Corporation Executive Order No. A-6-165 Pg. 8

L86/NB4 — ENGINE EXHAUST EMISSION CONTROL INFORMATION GENERAL MOTORS CORPORATION — GM

SET PARKING BRAKE AND BLOCK DRIVE WHEELS. MAKE ADJUSTMENTS WITH ENGINE AT NORMAL OPERATING TEMPERATURE, CHOKE FULL OPEN, AIR CLEANER INSTALLED, TRANSMISSION IN NEUTRAL, AND AIR CONDITIONING OFF.

1. SET TIMING WITH ENGINE RUNNING AT 700 RPM OR LESS.
2. ADJUST IDLE SPEED (SOLENOID ENERGIZED) TO SPECIFIED IDLE RPM.
3. ADJUST THROTTLE RETURN CONTROL (TRC) SPEED TO SPECIFIED TRC RPM.
4. ADJUST FAST IDLE SPEED WITH LEVER ON HIGHEST PORTION OF CHOKE CAM.

NOTE: IDLE MIXTURE SCREWS ARE PRESET AND CAPPED AT FACTORY. IF MAJOR ADJUSTMENT IS REQUIRED, MIXTURE MAY BE RESET USING METHOD DESCRIBED IN SERVICE MANUAL.

A.I.R. SYSTEM

GM 114 FAMILY

LITER DISPL	6.0
SPARK PLUG TYPE	R43T
SPARK PLUG GAP	0.045 IN
IDLE RPM	700
TRC RPM	1400
TIMING	8° BTDC
VALVE LASH	HYD.
FAST IDLE RPM	2200

FUEL REQUIREMENTS: USE 91 OCTANE OR HIGHER

SEE SERVICE MANUAL AND MAINTENANCE SCHEDULE FOR ADDITIONAL INFORMATION.

VACUUM HOSE ROUTING

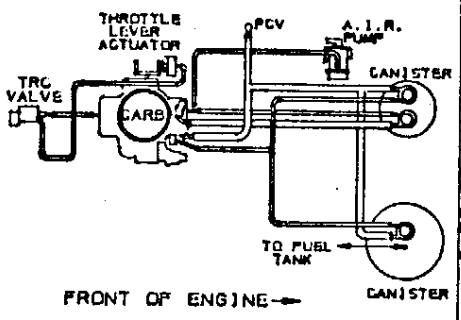

DATE OF MANUFACTURE: YEAR 1979 MONTH 7 8 9 10 11 12 — YEAR 1980 1 2 3 4 5 6 7 8 9 10 11 12

PRINTED IN U.S.A. THIS ENGINE CONFORMS TO U.S. EPA AND CALIFORNIA REGULATIONS APPLICABLE TO 1980 MODEL YEAR GASOLINE FUELED HEAVY DUTY ENGINES. PART NO 2052408

L43/NB4 — ENGINE EXHAUST EMISSION CONTROL INFORMATION GENERAL MOTORS CORPORATION — GM

SET PARKING BRAKE AND BLOCK DRIVE WHEELS. MAKE ADJUSTMENTS WITH ENGINE AT NORMAL OPERATING TEMPERATURE, CHOKE FULL OPEN, AIR CLEANER INSTALLED, TRANSMISSION IN NEUTRAL, AND AIR CONDITIONING OFF.

1. SET TIMING WITH ENGINE RUNNING AT 700 RPM OR LESS.
2. ADJUST IDLE SPEED (SOLENOID ENERGIZED) TO SPECIFIED IDLE RPM.
3. ADJUST THROTTLE RETURN CONTROL (TRC) SPEED TO SPECIFIED TRC RPM.
4. ADJUST FAST IDLE SPEED WITH LEVER ON HIGHEST PORTION OF CHOKE CAM.

NOTE. IDLE MIXTURE SCREWS ARE PRESET AND CAPPED AT FACTORY. IF MAJOR ADJUSTMENT IS REQUIRED, MIXTURE MAY BE RESET USING METHOD DESCRIBED IN SERVICE MANUAL.

A.I.R. SYSTEM

GM 114 FAMILY

LITER DISPL	7.0
SPARK PLUG TYPE	R42T
SPARK PLUG GAP	0.045 IN
IDLE RPM	700
TRC RPM	1400
TIMING	8° BTDC
VALVE LASH	HYD.
FAST IDLE RPM	2200

FUEL REQUIREMENTS: USE 91 OCTANE OR HIGHER

SEE SERVICE MANUAL AND MAINTENANCE SCHEDULE FOR ADDITIONAL INFORMATION.

VACUUM HOSE ROUTING

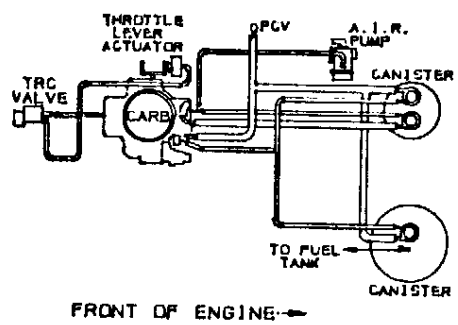

DATE OF MANUFACTURE: YEAR 1979 MONTH 7 8 9 10 11 12 — YEAR 1980 1 2 3 4 5 6 7 8 9 10 11 12

PRINTED IN U.S.A. THIS ENGINE CONFORMS TO U.S. EPA AND CALIFORNIA REGULATIONS APPLICABLE TO 1980 MODEL YEAR GASOLINE FUELED HEAVY DUTY ENGINES. PART NO 2052406

E.O. No. A-6-165
E.Fam. 112, 113, 114, 115
S.D. Sheet 8

Issued: 080379.

L42/NB4

ENGINE EXHAUST EMISSION CONTROL INFORMATION
GENERAL MOTORS CORPORATION

GM

SET PARKING BRAKE AND BLOCK DRIVE WHEELS. MAKE ADJUSTMENTS WITH ENGINE AT NORMAL OPERATING TEMPERATURE, CHOKE FULL OPEN, AIR CLEANER INSTALLED, TRANSMISSION IN NEUTRAL, AND AIR CONDITIONING OFF.

1. SET TIMING WITH ENGINE RUNNING AT 700 RPM OR LESS.
2. ADJUST IDLE STOP (SOLENOID ENERGIZED) TO OBTAIN SPECIFIED IDLE RPM
3. ADJUST THROTTLE RETURN CONTROL (TRC) SPEED TO SPECIFIED TRC RPM.
4. ADJUST FAST IDLE SPEED WITH LEVER ON HIGHEST PORTION OF CHOKE CAM.

NOTE: IDLE MIXTURE SCREWS ARE PRESET AND CAPPED AT FACTORY. IF MAJOR ADJUSTMENT IS REQUIRED, MIXTURE MAY BE RESET USING METHOD DESCRIBED IN SERVICE MANUAL.

A.I.R. SYSTEM

GM 114 FAMILY

LITER DISPL	7.4
SPARK PLUG TYPE	R42T
SPARK PLUG GAP	0.045 IN
IDLE RPM	700
TRC RPM	1400
TIMING	8° BTDC
VALVE LASH	HYD.
FAST IDLE RPM	2200

FUEL REQUIREMENTS: USE 91 OCTANE OR HIGHER

SEE SERVICE MANUAL AND MAINTENANCE SCHEDULE FOR ADDITIONAL INFORMATION.

VACUUM HOSE ROUTING

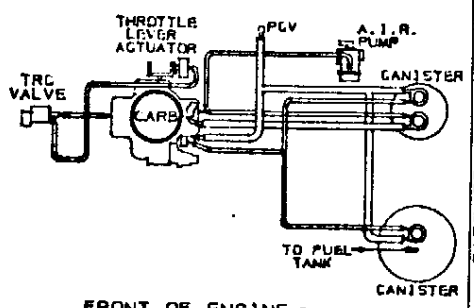

DATE OF MANUFACTURE
YEAR 1980 — 1 2 3 4 5 6 7 8 9 10 11 12
YEAR 1979 — 6 7 8 9 10 11 12
MONTH

PRINTED IN U.S.A. THIS ENGINE CONFORMS TO U.S. EPA AND CALIFORNIA REGULATIONS APPLICABLE TO 1980 MODEL YEAR GASOLINE FUELED HEAVY DUTY ENGINES. PART NO 2052412

XY

ENGINE EXHAUST EMISSION CONTROL INFORMATION

GENERAL MOTORS CORPORATION

GM

SET PARKING BRAKE AND BLOCK DRIVE WHEELS. MAKE ADJUSTMENTS WITH ENGINE AT NORMAL OPERATING TEMPERATURE. CHOKE FULL OPEN, AIR CLEANER INSTALLED AND AIR CONDITIONING OFF. PUT TRANSMISSION IN PARK OR NEUTRAL FOR ALL SETTINGS. (1) DISCONNECT AND PLUG VACUUM HOSE AT DISTRIBUTOR. SET IGNITION TIMING AT IDLE RPM. UNPLUG AND RECONNECT VACUUM HOSE AT DISTRIBUTOR. (2) DISCONNECT AND PLUG CANISTER PURGE HOSE AND CANISTER PURGE SIGNAL HOSE AT VAPOR CANISTER. (3) ADJUST IDLE SPEED TO SPECIFIED RPM. (4) ADJUST THROTTLE RETURN CONTROL SPEED TO SPECIFIED RPM. (5) ADJUST FAST IDLE SPEED WITH LEVER ON HIGH STEP OF CAM. (6) UNPLUG AND RECONNECT CANISTER PURGE HOSE AND CANISTER PURGE SIGNAL HOSE TO VAPOR CANISTER.

ENGINE FAMILY	ENG. DISP.	EMISSION CONTROL	IDLE RPM	TIMING	FAST IDLE RPM	SPARK PLUG GAP (IN.)	THROTTLE RETURN CONTROL RPM	VALVE LASH
*115	7.4 LITER	AIR	700	4° BTC	1900	0.045	1500	HYD.

DATE OF MANUFACTURE FOR THIS ENGINE IS NOTED ON OTHER ENGINE EXHAUST EMISSION CONTROL INFORMATION LABEL.

NOTE IDLE MIXTURE SCREWS ARE PRESET AND SEALED AT FACTORY. IF MAJOR ADJUSTMENT IS REQUIRED, MIXTURE MAY BE RESET USING THE BEST IDLE MIXTURE METHOD PER SERVICE MANUAL.

SEE SERVICE MANUAL, MAINTENANCE SCHEDULE AND EMISSION HOSE ROUTING DIAGRAM FOR ADDITIONAL INFORMATION. FUEL REQUIREMENTS – USE 91 OCTANE OR HIGHER

THIS ENGINE CONFORMS TO U.S. EPA AND CALIFORNIA REGULATIONS APPLICABLE TO 1980 MODEL YEAR NEW HEAVY-DUTY GASOLINE ENGINES.

PT. NO. 14015420
PRINTED IN U.S.A.

XY EMISSION HOSE ROUTING

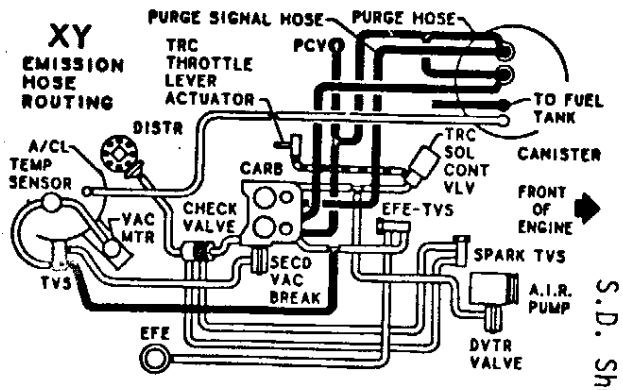

E.O. No. A-6-165
E.Fam. 112,113,114,115
S.D. Sheet 9

Issued: 080379.