State of California
AIR RESOURCES BOARD

EXECUTIVE ORDER A-10-77
Relating to Certification of New Motor Vehicles

FORD MOTOR COMPANY

Pursuant to the authority vested in the Air Resources Board by Sections 43100, 43102, and 43103 of the Health and Safety Code; and

Pursuant to the authority vested in the undersigned by Sections 39515 and 39516 of the Health and Safety Code and Executive Order G-45-3;

IT IS ORDERED AND RESOLVED: That Ford Motor Company exhaust emission control systems for 1977 model-year light-duty trucks are certified for the engine family described below:

Engine Family: 300 "C" (1CV7)
Engine: 300 CID
Transmission: 3 speed automatic or 3 speed manual
Exhaust Emission Control Systems: Exhaust Gas Recirculation, Oxidation Catalyst, Pulse Air Injection

Models: F-100

Regular Cab SWB Styleside Custom
Regular Cab SWB Styleside Ranger
Regular Cab SWB Styleside Ranger XLT
Regular Cab SWB Styleside Explorer
Regular Cab SWB Flareside Custom
Regular Cab SWB Flareside Ranger
Regular Cab SWB Flareside Ranger XLT
Regular Cab SWB Flareside Explorer
Regular Cab LWB Styleside Custom
Regular Cab LWB Styleside Ranger
Regular Cab LWB Styleside Ranger XLT
Regular Cab LWB Styleside Explorer
Regular Cab LWB Flareside Custom
Regular Cab LWB Flareside Ranger
Regular Cab LWB Flareside Ranger XLT
Regular Cab LWB Flareside Explorer
Regular Chassis Cab SWB Styleside Custom
Regular Chassis Cab SWB Styleside Ranger
Regular Chassis Cab SWB Styleside Ranger XLT
Regular Chassis Cab SWB Flareside Custom

Regular Chassis Cab SWB Flareside Ranger
Regular Chassis Cab SWB Flareside Ranger XLT
Regular Chassis Cab LWB Styleside Custom
Regular Chassis Cab LWB Styleside Ranger
Regular Chassis Cab LWB Styleside Ranger XLT
Regular Chassis Cab LWB Flareside Custom
Regular Chassis Cab LWB Flareside Ranger
Regular Chassis Cab LWB Flareside Ranger XLT

E-100

SWB Van
SWB Van Custom
SWB Van Chateau
LWB Van
LWB Van Custom
LWB Van Chateau
SWB Club Wagon
SWB Club Wagon Custom
SWB Club Wagon Chateau

The following are the recommended values to be listed on the window decal required by California Assembly-Line Test Procedures for 1977 model-year vehicles:

Engine Family	Hydrocarbons Grams per Mile	Carbon Monoxide Grams per Mile	Nitrogen Oxides Grams per Mile
300 "C" (1CV7)	0.8	16	1.4

BE IT FURTHER RESOLVED: That this certification is contingent upon Ford Motor Company affixing a permanent catalyst overheat warning label on the driver's sun-visor of all catalyst-equipped vehicles. This label must be approved by the Executive Officer.

BE IT FURTHER RESOLVED: That this certification is also contingent upon Ford Motor Company listing in the owner's manual the operating cautions associated with a catalyst-equipped vehicle. This listing must be approved by the Executive Officer.

Vehicles certified under this Executive Order must conform to all applicable California emission regulations.

The Department of Motor Vehicles, the California Highway Patrol, and the Bureau of Automotive Repair will be notified by copy of this order and attachment.

Executed at El Monte, California, this 28 day of January, 1977.

G. C. Hass

G. C. Hass, Chief
Vehicle Emissions Control Division

1977 AIR RESOURCES BOARD SUPPLEMENTAL DATA SHEET

☐ Passenger Cars ☒ Light-Duty Trucks

Manufacturer Ford Motor Company Executive Order No. A-10-77 Page 1

Engine Family 300 "C" (1CV7) Engine (CID) 300 Engine Code 7-51T-RO

Emission Control System PAI, EGR, OC +10%(A/C) Yes ☐ No ☒

Vehicle Models (If Coded see attachment)	Trans	Inertia Weight	Distributor Type, EI, C,V Mfgr. Part Number	Fuel System Type 1-1V Mfgr. Part Number	EGR System Part No. Service*	Tune-Up Specification (1) Basic Timing (2) Idle Mixture (3) Idle Speed
E-100 SWB Van	M/T3	4000	Ford D7TE-12127-AKA	Carter D7TE-9510-CFA	D7UE-9D448-HA	(1) 6° BTDC @ 700 RPM in neutral; vacuum line disconnected and plugged at the distributor.
LWB Van SWB Club Wagon		4500				(2) Artifical Enrichment Standard PCV flow Gain 30-180 RPM Reset 70-80 RPM High PCV flow Gain 60-220 RPM Reset 110-120 RPM Optimum Idle Standard PCV flow 80 RPM High PCV flow 120 RPM Adjustment Procedure attached (3) 700 RPM in neutral

Comments Axle ratio: 3.00, 2.75

"High PCV flow valve is installed when the mileage is at or over 22500 miles."

Date of Issue

Abbreviations

Distributor
C-Centrifugal Advance
V-Vacuum Advance
R-Vacuum Retard
HEI-High Energy Ignition
EI-Electronic Ignition

Fuel System
EFI, FI
nV-nVenturi Carburetor
VV-Variable Venturi

Exhaust Emission Control System
AI-Air Injection
CAI-Catalyst Air Injection
EFI-Electronic Fuel Injection
EGR-Exhaust Gas Recirculation
EM-Engine Modification
EFE-Early Fuel Evaporation
ESAC-Electronic Spark Advance Control
FI-Fuel Injection

OC-Oxidation Catalyst
PAI-Pulse Air Injection
RC-Reduction Catalyst
TR-Thermal Reactor
TWC-Three Way Catalyst
λ-Air Fuel Ratio Sensor

*Service
I-Inspect, repair/replace as needed
R-Replace

1977 AIR RESOURCES BOARD SUPPLEMENTAL DATA SHEET

☐ Passenger Cars ☒ Light-Duty Trucks

Manufacturer Ford Motor Company Executive Order No. A-10-77 Page 2

Engine Family 300 "C" (1CV7) Engine (CID) 300 Engine Code 7-52 T-RO

Emission Control System PAI, EGR, OC +10%(A/C) Yes ☐ No ☒

Vehicle Models (If Coded see attachment)	Trans	Inertia Weight	Distributor Type EI C,V Mfgr. Part Number	Fuel System Type T-1V Mfgr. Part Number	EGR System Part No. Service*	Tune-Up Specification (1) Basic Timing (2) Idle Mixture (3) Idle Speed
E-100 SWB Van	A/T3 C4-7T5 C4-7T6	4000	Ford D7TE-12127-AKA	Carter D7TE-9510-CFA	D7UE-9D448-LA	(1) 6° BTDC @ 550 RPM in drive; vacuum line disconnected and plugged at the distributor.
LWB Van		4500				(2) Artifical Enrichment Low flow PCV Gain 30-180 RPM Reset 70-80 RPM High flow PCV Gain 60-220 Reset 110-120 Optimum Idle Low flow PCV 80 RPM High flow PCV 120 RPM Adjustment Procedure attached
SWB Club Wagon						(3) 550 RPM in drive

Comments Axle Ratio; 3.25, 2.75

"High PCV flow valve is installed when the mileage is at or over 22500 miles."

Date of Issue

Abbreviations

Distributor
C-Centrifugal Advance
V-Vacuum Advance
VR-Vacuum Retard
HEI-High Energy Ignition
EI-Electronic Ignition

Fuel System
EFI, FI
nV-nVenturi Carburetor
VV-Variable Venturi

Exhaust Emission Control System
AI-Air Injection
CAI-Catalyst Air Injection
EFI-Electronic Fuel Injection
EGR-Exhaust Gas Recirculation
EM-Engine Modification
EFE-Early Fuel Evaporation
ESAC-Electronic Spark Advance Control
FI-Fuel Injection

OC-Oxidation Catalyst
PAI-Pulse Air Injection
RC-Reduction Catalyst
TR-Thermal Reactor
TWC-Three Way Catalyst
λ-Air Fuel Ratio Sensor

*Service
I-Inspect, repair/replace as needed
R-Replace

1977 AIR RESOURCES BOARD SUPPLEMENTAL DATA SHEET

[ ] Passenger Cars [X] Light-Duty Trucks

Manufacturer Ford Motor Company Executive Order No. A-10-77 Page 3

Engine Family 300 "C" (1CV7) Engine (CID) 300 Engine Code 7-51S-RO

Emission Control System PAI, OC, EGR +10%(A/C) Yes [ ] No [X]

Vehicle Models (If Coded see attachment)	Trans	Inertia Weight	Distributor Type C,V,EI Mfgr. Part Number	Fuel System Type 1-1V Mfgr. Part Number	EGR System Part No. Service*	Tune-Up Specification (1) Basic Timing (2) Idle Mixture (3) Idle Speed
F-100 Regular Cab SWB LWB Regular Chassis Cab SWB LWB	M/T3	4000 4500	Ford D7TE- 12127-AJA	Carter D7TE- 9510-CFA	D7TE- 9D448-TA	(1) 6° BTDC @ 700 RPM in neutral; vacuum line disconnected and plugged at distributor (2) Artifical Enrichment Low Flow PCV Gain 30-180 Reset 70-80 High Flow PCV Gain 60-220 Reset 110-120 Optimum Idle Low Flow PCV 80 RPM High Flow PCV 120 RPM Adjustment Procedure attached (3) 700 RPM in neutral

Comments Axle Ratio: 3.00, 3.07, 2.75, 2.72 3.50, 3.54

"High PCV flow valve is installed when the mileage is at or over 22500 miles."

Date of Issue R/C 300 "C" (1CV7)-15T 040677
R/C 300 "C" (1CV7)-20T 042277

Abbreviations

Distributor
C-Centrifugal Advance
V-Vacuum Advance
R-Vacuum Retard
HEI-High Energy Ignition
EI-Electronic Ignition

Fuel System
EFI, FI
nV-nVenturi Carburetor
VV-Variable Venturi

Exhaust Emission Control System
AI-Air Injection
CAI-Catalyst Air Injection
EFI-Electronic Fuel Injection
EGR-Exhaust Gas Recirculation
EM-Engine Modification
EFE-Early Fuel Evaporation
ESAC-Electronic Spark Advance Control
FI-Fuel Injection

OC-Oxidation Catalyst
PAI-Pulse Air Injection
RC-Reduction Catalyst
TR-Thermal Reactor
TWC-Three Way Catalyst
λ-Air Fuel Ratio Sensor

*Service
I-Inspect, repair/replace as needed
R-Replace

1977 AIR RESOURCES BOARD SUPPLEMENTAL DATA SHEET

☐ Passenger Cars ☒ Light-Duty Trucks

Manufacturer Ford Motor Company Executive Order No. A-10-77 Page 4

Engine Family 300 "C" (1CV7) Engine (CID) 300 Engine Code 7-52 T-R11

Emission Control System PAI, EGR, OC +10%(A/C) Yes ☐ No ☒

Vehicle Models (If Coded see attachment)	Trans	Inertia Weight	Distributor Type EI C,V Mfgr. Part Number	Fuel System Type T-IV Mfgr. Part Number	EGR System Part No. Service*	Tune-Up Specification (1) Basic Timing (2) Idle Mixture (3) Idle Speed
E-100 SWB Van	A/T3 C4-7T5 C4-7T6	4000	Ford D7TE-12127-AKA	Carter D7TE-9510-CFB	D7UE-9D448-LA	(1) 6° BTDC @ 550 RPM in drive; vacuum line disconnected and pluggec at the distributor.
LWB Van		4500				(2) Artifical Enrichment Low flow PCV Gain 30-180 RPM Reset 70-80 RPM High flow PCV Gain 60-220 Reset 110-120 Optimum Idle Low flow PCV 80 RPM High flow PCV 120 RPM Adjustment Procedure attached
SWB Club Wagon						(3) 550 RPM in drive

Comments Axle Ratio; 3.25, 2.75

"High PCV flow valve is installed when the mileage is at or over 22500 miles."

Date of Issue F/F 300 "C" (1CV7) - 24T 092177

Abbreviations

Distributor
C-Centrifugal Advance
V-Vacuum Advance
VR-Vacuum Retard
HEI-High Energy Ignition
EI-Electronic Ignition

Fuel System
EFI, FI
nV-nVenturi Carburetor
VV-Variable Venturi

Exhaust Emission Control System
AI-Air Injection
CAI-Catalyst Air Injection
EFI-Electronic Fuel Injection
EGR-Exhaust Gas Recirculation
EM-Engine Modification
EFE-Early Fuel Evaporation
ESAC-Electronic Spark Advance Control
FI-Fuel Injection

OC-Oxidation Catalyst
PAI-Pulse Air Injection
RC-Reduction Catalyst
TR-Thermal Reactor
TWC-Three Way Catalyst
λ-Air Fuel Ratio Sensor

*Service
I-Inspect, repair/replace as needed

1977 AIR RESOURCES BOARD SUPPLEMENTAL DATA SHEET

[ ] Passenger Cars [X] Light-Duty Trucks

Manufacturer Ford Motor Company Executive Order No. A-10-77 Page 5

Engine Family 300 "C" (1CV7) Engine (CID) 300 Engine Code 7-51S-R11

Emission Control System PAI, OC, EGR +10%(A/C) Yes [ ] No [X]

Vehicle Models (If Coded see attachment)	Trans	Inertia Weight	Distributor Type C,V,EI Mfgr. Part Number	Fuel System Type 1-1V Mfgr. Part Number	EGR System Part No. Service*	Tune-Up Specification (1) Basic Timing (2) Idle Mixture (3) Idle Speed
F-100 Regular Cab SWB LWB Regular Chassis Cab SWB LWB	M/T3	4000 4500	Ford D7TE-12127-AJA	Carter D7TE-9510-CFB	D7TE-9D448-UA	(1) 6° BTDC @ 700 RPM in neutral; vacuum line disconnected and plugged at distributor (2) Artifical Enrichment Low Flow PCV Gain 30-180 Reset 70-80 High Flow PCV Gain 60-220 Reset 110-120 Optimum Idle Low Flow PCV 80 RPM High Flow PCV 120 RPM Adjustment Procedure attached (3) 700 RPM in neutral

Comments Axle Ratio: 3.00, 3.07, 2.75, 2.72 3.50, 3.54

"High PCV flow valve is installed when the mileage is at or over 22500 miles."

Date of Issue 092177 F/F 300 "C" (1CV7) -23T

Abbreviations

Distributor
C-Centrifugal Advance
V-Vacuum Advance
R-Vacuum Retard
HEI-High Energy Ignition
EI-Electronic Ignition

Fuel System
EFI, FI
nV-nVenturi Carburetor
VV-Variable Venturi

Exhaust Emission Control System
AI-Air Injection
CAI-Catalyst Air Injection
EFI-Electronic Fuel Injection
EGR-Exhaust Gas Recirculation
EM-Engine Modification
EFE-Early Fuel Evaporation
ESAC-Electronic Spark Advance Control
FI-Fuel Injection

OC-Oxidation Catalyst
PAI-Pulse Air Injection
RC-Reduction Catalyst
TR-Thermal Reactor
TWC-Three Way Catalyst
λ-Air Fuel Ratio Sensor

*Service
I-Inspect, repair/replace as needed

Ford Parts and Service Division
Training and Publications Department

"Note: Disregard 1975 or 1976 model designations. These adjustment procedures are applicable to 1977 Ford Light-Duty Truck engine family 300 "C" (1CV7)."

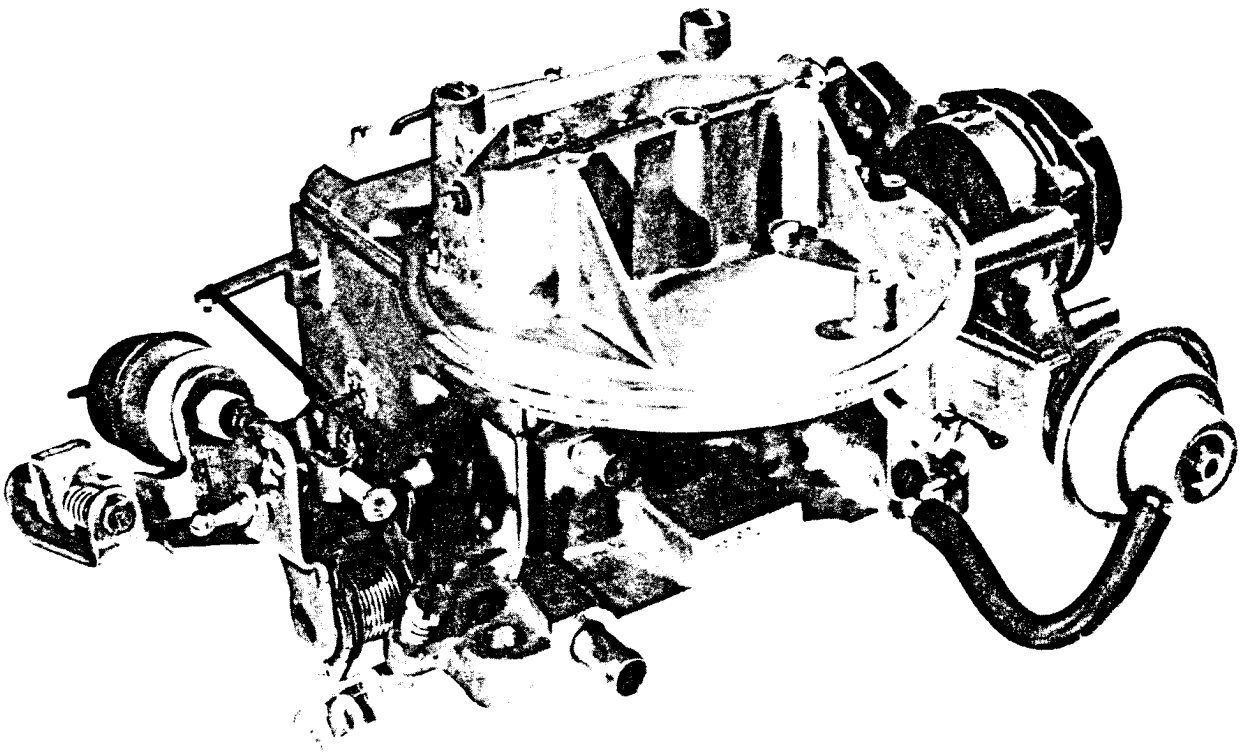

PROCEDURE FOR "ARTIFICIAL ENRICHMENT" IDLE MIXTURE ADJUSTMENT

ADJUSTING IDLE MIXTURE ON 1975-76 FORD CARS AND TRUCKS

Ford cars and light trucks with catalytic converters require a special idle mixture test and adjustment procedure. Since the catalyst reduces exhaust carbon monoxide (CO) to an almost immeasurable percentage at the exhaust pipe, an infra-red analyser cannot be used accurately for idle mixture adjustment. Because of this, Ford developed the artificial enrichment test procedure. The test consists of injecting a metered amount of propane into the carburetor and measuring the rpm increase while the engine is idling. If the rpm gain is less than specified on the engine tune-up decal, located on the valve cover, the air-fuel ratio is too rich. If the rpm gain is more than specified, the air-fuel ratio is too lean.

The artificial enrichment test procedure is easy to follow and faster to perform than the speed drop method check. The adjustment can be done most of the time without removing the limiter caps.

How To Check To See If System Needs Adjustment

The following procedure uses special tool T75L-9600-A to check the idle fuel mixture adjustment. Figure 1 illustrates the valve cover decal and the specification location. Figure 2 shows the tool connection.

1. Connect tachometer to the engine.
2. Stabilize engine temperature by running at fast idle until engine thermostat is open (top of radiator tank is warm).
3. Disconnect PCV inlet hose from air cleaner and plug air cleaner connection.
4. Disconnect thermactor air supply hose from check valve.
5. Disconnect the evaporative emission purge hose from air cleaner.
6. Put the transmission in Neutral or Drive as specified on the engine decal. CAUTION: Be sure the wheels are blocked and the brakes set if the transmission is in Drive.
7. Place the propane bottle of the enrichment tool in the upright position and insert the plug on the hose into the air cleaner connection from which the evaporative emission hose was disconnected.
8. Adjust idle rpm. Slowly open the propane valve until the maximum idle speed increase is obtained. Note the maximum rpm gain. If the propane valve is opened further, rpm will drop off as the mixture goes overly rich.
9. Compare the maximum rpm gain to the specification on the engine decal.
10. If the speed increase is within specifications, remove the enrichment tool from the air cleaner and reinstall all hoses (except if speed increase is "0" rpm and minimum of specification range is "0", see page 4). If the rpm gain is too high or too low, however, the idle mixture must be adjusted.

GENERAL NOTES:

1. Run engine at 1500 rpm for one minute before each idle rpm check.
2. When adjusting curb idle rpm, air cleaner must be in place and thermactor must be connected.
3. When checking rpm rise with propane injection, air cleaner must be in place, thermactor disconnected and transmission in neutral or drive according to specifications.
4. After each adjustment of mixture screws, readjust idle speed.

VEHICLE EMISSION CONTROL INFORMATION

ENGINE FAMILY 302 CATALYST EGR/AIR (2CMF)
ENGINE DISPLACEMENT CID 302 CID
SPARK PLUG ARF-42 GAP .042-.046
DISTRIBUTOR-BREAKERLESS

CHOKE HOUSING	MAN/TRANS		
NOTCH SETTING	AUTO/TRANS		3 RICH
TRANSMISSION	AUTO NEUTRAL	AUTO DRIVE	MANUAL NEUTRAL
IGNITION TIMING	8°BTDC		
TIMING RPM	500		
CURB IDLE RPM A/C		700	
CURB IDLE RPM NO A/C		700	
IDLE MIXTURE-ARTIFICIAL ENRICHMENT			
RPM GAIN RPM RESET		15-80 15-70	

THIS VEHICLE REQUIRES MAINTENANCE SCHEDULE "B"

MAKE ALL ADJUSTMENTS WITH ENGINE AT NORMAL OPERATING TEMPERATURES, A/C AND HEADLIGHTS OFF.

CURB IDLE-ADJUST WITH THROTTLE SOLENOID POSITIONER ENERGIZED, THERMACTOR AIR ON, ALL VACUUM HOSES CONNECTED AND AIR CLEANER IN POSITION. WHENEVER CURB IDLE IS RESET, CHECK AND ADJUST THE DECEL VALVE ACCORDING TO THE SERVICE MANUAL.

IDLE MIXTURE-PRESET AT THE FACTORY. DO NOT REMOVE THE LIMITER CAP(S). CONSULT THE SERVICE MANUAL FOR DESCRIPTION OF ARTIFICIAL ENRICHMENT METHOD OF IDLE MIXTURE ADJUSTMENT TO BE USED ONLY DURING TUNE-UPS AND MAJOR CARBURETOR REPAIRS. IDLE MIXTURE MUST BE MEASURED WITH THERMACTOR AIR OFF.

INITIAL TIMING-ADJUST WITH HOSES DISCONNECTED AND PLUGGED AT THE DISTRIBUTOR.

REFERENCE TO A/C, THROTTLE SOLENOID, THERMACTOR AIR AND DECEL VALVE APPLICABLE ONLY IF THE ENGINE IS SO EQUIPPED. CONSULT SERVICE PUBLICATIONS FOR FURTHER INSTRUCTIONS ON TIMING AND IDLE SET

THIS VEHICLE CONFORMS TO U.S.E.P.A. REGULATIONS APPLICABLE TO 1975 MODEL YEAR NEW MOTOR VEHICLES
THIS VEHICLE ALSO CONFORMS TO THE STATE OF CALIFORNIA CERTIFICATION STANDARDS APPLICABLE TO 1975 MODEL YEAR NEW MOTOR VEHICLES
FORD MOTOR COMPANY

CALIFORNIA

Figure 1 — Valve Cover Decal — Typical

❶ Stabilize engine temperature by running at fast idle (kick-down step) until engine thermostat is open (top of radiator tank is warm).

❷ Disconnect evaporative emission purge hose at air cleaner. When applicable, disconnect PCV hose at air cleaner and cap air cleaner connection.

❸ Adjust idle speed to CURB IDLE (or to Idle Mixture Adjust Speed, if given).

❹ Unless otherwise noted on emission decal, make sure transmission is in NEUTRAL, if manual, or in DRIVE if automatic. CAUTION: Depress brake pedal or block wheels when vehicle is in gear with engine running. Disconnect brake vacuum release (if so equipped) and plug fitting.

❺ Remove thermactor system air supply hose (from by-pass valve to check valve) at check valve(s).

❻ Plug tool T75L-9600-A adapter into purge opening in air cleaner. With engine idling, slowly open propane gas valve until maximum idle speed increase is attained. Note speed increase and compare to specification.

❼ To check proper operation of Tool, continue opening valve until engine speed drops due to over-rich mixture. If speed does not drop, check propane gas supply.

❽ If speed increase is to specification, remove Tool from purge connection and re-install all hoses removed from air cleaner. Reconnect thermactor system.

IF SPEED INCREASE IS NOT WITHIN SPECIFICATION PROCEED TO "ADJUSTMENT PROCEDURES" ON THE NEXT PAGE.

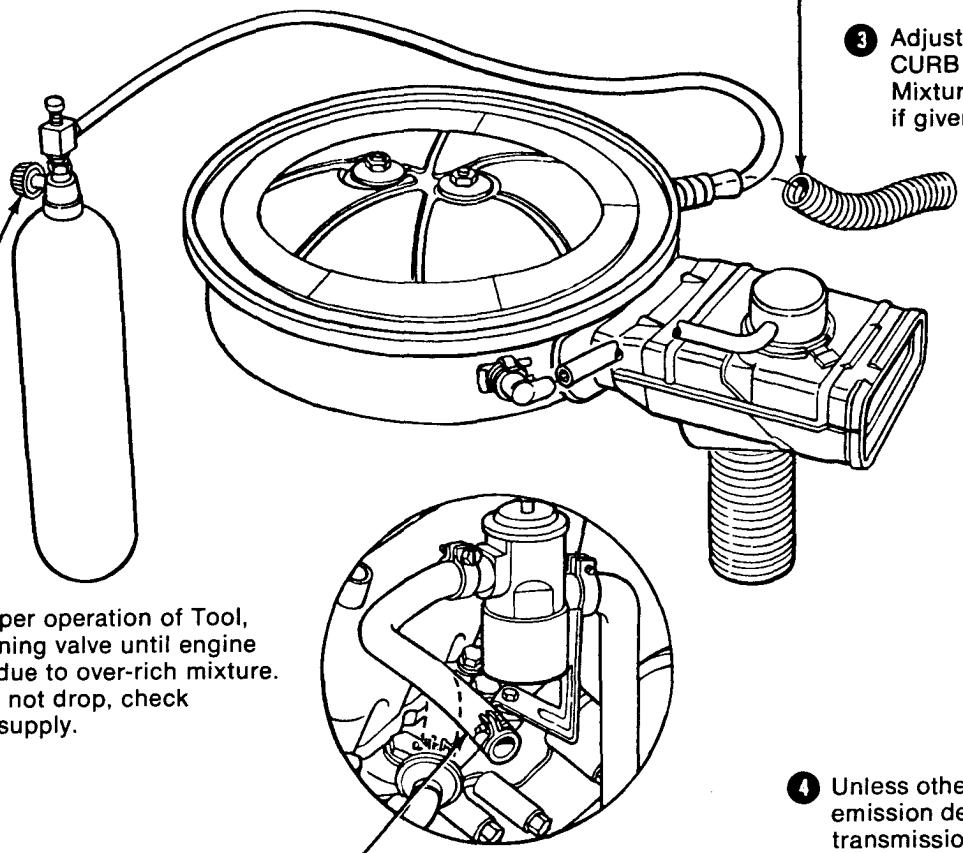

Figure 2 — "Idle Fuel Mixture Check — Artificial Enrichment Method"

How To Adjust If Needed

The following adjustments should give the proper idle CO level if all other systems in the vehicle are in proper working order, and the fuel and ignition systems otherwise are adjusted properly.

If Idle Speed Increase With Propane Is Above Specifications

Richen the mixture (without propane) by turning the mixture screws counterclockwise in equal amounts until the rpm increases the same amount that the original reading was in excess of the specified "reset" increase.

EXAMPLE: Specified "reset" increase — 50 RPM
Observed increase — 80 RPM
System lean by 30 RPM

Turn the screws until the rpm increases 30 rpm and retest with propane tool.

If idle mixture screws are already in the full rich position, remove the caps with a cap remover before proceeding with the adjustment (Figure 3).

When desired increase has been attained by adjusting the mixture screws, adjust the curb idle (or idle mixture check rpm, if specified on tune-up decal) to specification. Perform the idle rpm increase again, using propane. If increase is still too high, readjust by again turning screws in rich direction. If idle increase is within specifications, set curb idle.* If idle increase is now too low, proceed to "If Idle Speed Increase With Propane Is Below Specifications".

If Idle Increase With Propane Is Below Specifications

Lean the mixture (without propane) by turning the mixture screws clockwise in equal amounts until the rpm drops the same amount that the observed increase was below the specified "reset" increase:

EXAMPLE: Specified "reset" increase — 50 RPM
Observed increase — 20 RPM
System rich by 30 RPM

When the desired decrease is attained, readjust curb idle rpm (or idle mixture check rpm) to specification. Recheck idle rpm increase with propane and readjust if necessary.*

***NOTE:**
If idle mixture screw limiter caps were removed and adjustment is now within specification, install service (Blue) limiters with the tang against the full rich stop. If limiters were not removed, reconnect purge and PCV lines to the air cleaner and reconnect thermactor check valve line. Disconnect tachometer.

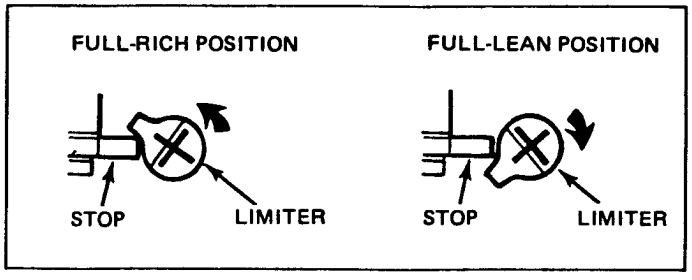

Figure 3 — Limiter Caps In Full Rich or Lean Position

If Idle Increase With Propane is Zero and Minimum Specified Speed Gain is Zero

Richen the mixture by turning the limiter screws counterclockwise to the full rich stop (Figure 3). Adjust idle speed to specifications. Recheck idle rpm increase with propane. If speed gain is now greater than zero rpm and within specifications, set curb idle speed.*

If speed gain is still zero, lean mixture by turning the limiter screws clockwise to full lean position (or ¾ turn lean if limiters have been removed). Note drop in rpm.

- If drop is equal to or greater than specifications, (tabulated below for affected 1976 California engine families) return mixture screws to original rich position.*

Engine CID	Trans.	Min. Idle Speed Drop
2.3L	A/T	150
	M/T	100
2.8L	M/T	100
250	A/T	10
	M/T	20
300	A/T & M/T	20

- If drop is lower than specifications, the mixture must be adjusted using the method described for "If Idle Increase Is Below Specifications".

Special Tools

To obtain information to purchase the Carburetor Idle Adjustment tool T75L-9600-A send your name and address to:

OWATONNA TOOLS, INC.
OWANTONNA, MINNESOTA 55060

PROCEDURE FOR "ARTIFICIAL ENRICHMENT" IDLE MIXTURE ADJUSTMENT – ADDENDUM

Alternate Idle Fuel Mixture Adjusting Procedure—Optimum Idle Method—California only.

FORD

- **All 1976 California passenger cars.**

LINCOLN-MERCURY

- **All 1976 California passenger cars.**

TRUCKS

- **All 1976 California light truck vehicles (u/6000 lbs. GVW) only.**

NOTE: Remove and reinstall air cleaner, when necessary, to perform all idle speed and optimum idle speed increase adjustments.

Before each idle speed measurement is made, the engine should be run at 1500 rpm, in neutral, for one minute.

— WARNING: WHEELS MUST BE BLOCKED BEFORE STARTING ENGINE. —

1. Install tachometer, and bring engine to normal temperature. Disconnect the evaporative emission purge hose from the air cleaner.
2. Set idle speed to the IDLE MIXTURE SPEED specification shown on the emission decal. If no idle mixture speed is called out, set the engine to the specified CURB IDLE SPEED (in the gear specified for curb idle speed).

   NOTE: Idle speeds should be measured with the air cleaner installed.
3. Disconnect the thermactor hose at the check valve connection.
4. Record the engine RPM with the transmission in the proper gear as specified in its IDLE MIXTURE — RPM RESET portion of the emission decal.
5. Remove the limiter caps and turn the mixture screw(s) clockwise until lightly seated and back-out ½ turn (on each screw).
6. Continue to slowly back out the idle mixture screw(s) equally in ¼ turn increments until maximum engine RPM has been obtained and record that figure (max. RPM).
7. The "Idle Speed Increase" is the difference in the two RPM readings. (Reading of Step 6 minus reading of Step 4.)
8. The "Idle Speed Increase" should equal the OPTIMUM SPECIFICATION shown in the note below.

   NOTE: Determine the OPTIMUM SPECIFICATION as follows: When the RPM RESET SPECIFICATION on the emission decal is a single number, add 10 RPM to this number when checking against the "Idle Speed Increase." When the RPM RESET SPECIFICATION is given as a range (Example: 20-30 RPM) the upper limit of the range (30 RPM) should be checked against the "Idle Speed Increase."

   a. If the "Idle Speed Increase" is equal to the OPTIMUM SPECIFICATION as described above, proceed to step 9.

   b. If the "Idle Speed Increase" is not equal to the OPTIMUM SPECIFICATION, adjust the curb idle screw or throttle positioner until engine speed is equal to the OPTIMUM SPECIFICATION plus the original RPM reading obtained in Step 4. Then repeat Steps 5, 6, 7 and 8.

   (Example: 600 RPM recorded in Step 4 plus 20-30 RPM Reset Specification (on the emission decal) — set the idle speed in Step 8b to 630 RPM.)
9. Slowly turn the mixture screw(s) clockwise equally in ¼ turn increments (or less) until the engine RPM drops to the same speed that was obtained in Step No. 4.
10. If previously removed, install the air cleaner on carburetor and recheck idle speed. Adjust idle mixture screw(s), if necessary, to obtain the same idle speed in Step 4.
11. Install new service (blue) limiters cap(s) at the maximum rich stop. Check idle speed to assure that limiter installation did not disturb the setting. If setting is within specification, proceed to Step 12. Otherwise, correct as required.
12. Reinstall all system components removed in Step 3.
13. Check and reset curb idle speed to specification if required.
14. Turn off the engine. Disconnect tachometer and torque the wing nut(s) on air cleaner to specification.