State of California
AIR RESOURCES BOARD

EXECUTIVE ORDER A-6-117
Relating to Certification of New Motor Vehicles

GENERAL MOTORS CORPORATION

Pursuant to the authority vested in the Air Resources Board by Health and Safety Code Sections 43100, 43102, 43103, and 43835; and

Pursuant to the authority vested in the undersigned by Health and Safety Code Sections 39515 and 39516 and Executive Orders G-45-3 and G-45-4;

IT IS ORDERED AND RESOLVED: That General Motors Corporation exhaust emission control systems for 1978 model-year passenger cars are certified for the vehicles described below:

Engine Family: 830M4AU
Engine: 350 CID, 403 CID
Transmission: 3-speed automatic
Exhaust Emission Control System: Air Injection, Exhaust Gas Recirculation, Oxidation Catalyst.

Models and Engine Codes as listed in attachment.

The following are the recommended values to be listed on the window decal required by California Assembly-Line Test Procedures for 1978 model-year vehicles:

Engine Family	Hydrocarbons Grams per Mile	Carbon Monoxide Grams per Mile	Nitrogen Oxides Grams per Mile
830M4AU	0.31	5.6	1.4

BE IT FURTHER RESOLVED: That the above models also comply with the Board's "Specifications for Fill Pipes and Openings of Motor Vehicle Fuel Tanks" (13 California Administrative Code, Section 2290) for the aforementioned model year, or have been granted a temporary exemption from the aforementioned "Specifications" by Executive Order AA-6 series.

BE IT FURTHER RESOLVED: That the above models also comply with "California Evaporative Emission Standards and Test Procedures for 1978 and Subsequent Model Gasoline-powered Motor Vehicles except Motorcycles".

Vehicles certified under this Executive Order must conform to all applicable California emission regulations.

The Department of Motor Vehicles, the California Highway Patrol, and the Bureau of Automotive Repair will be notified by copy of this order and attachment.

Executed at El Monte, California, this 26 day of August, 1977.

G. C. Hass

G. C. Hass, Chief
Vehicle Emissions Control Division

1978 AIR RESOURCES BOARD SUPPLEMENTAL DATA SHEET-GM FORMAT

Manufacturer GENERAL MOTORS CORPORATION Executive Order No. A-6-117 Page 1

Engine Family 83OM4AU Engine (CID) 350 and 403

ABBREVIATIONS

Distributor
C-Centrifugal Advance
V-Vacuum Advance
VR-Vacuum Retard
HEI-High Energy Ignition

Fuel System
EFI
nV-nVenturi Carburetor

Exhaust Emission Control
AI-Air Injection
CAI-Catalyst Air Injection
EFI-Electronic Fuel Injection
EGR-Exhaust Gas Recirculation
EM-Engine Modification
EFE-Early Fuel Evaporation

ESAC-Electronic Spark Advance Control
OC-Oxidation Catalyst

PAI-Pulse Air Injection
TC-Turbo Charged
TWC-Three Way Catalyst (Feedback Control)

DIVISION	BASIC BODY	TRIM	BODY TYPE	
2				**PONTIAC**
	B	L	35	Catalina Safari Station Wagon
		N	35	Bonneville Safari Station Wagon
		L	37	Catalina Coupe
		N	37	Bonneville Coupe
		Q	37	Bonneville Brougham Coupe
		N	69	Bonneville Sedan.
		Q	69	Bonneville Brougham Sedan
		L	69	Catalina Sedan
	F	U	87	Formula
		W	87	Trans Am
3				**OLDSMOBILE**
	B	Q	35	Custom Cruiser
		L	37	Delta 88 Coupe
		N	37	Delta 88 Royale Coupe
		M	37	Delta 88 Holiday Coupe
		L	69	Delta 88 Sedan
		N	69	Delta 88 Royale Sedan
	C	V	37	Ninety Eight Luxury Coupe
		X	37	Ninety Eight Regency Coupe
		V	69	Ninety Eight Luxury Sedan
		X	69	Ninety Eight Regency Sedan
	E	W	57	Toronado XSR Coupe
		Z	57	Toronado Brougham Coupe
3				**OLDSMOBILE**
	A	J	09	Cutlass Salon Brougham Sedan
		G	09	Cutlass Salon Sedan
		H	35	Cutlass Cruiser Station Wagon
		M	47	Cutlass Supreme Brougham Coupe
		R	47	Cutlass Supreme Coupe
		K	47	Cutlass Calais Coupe
		J	87	Cutlass Salon Brougham Coupe
		G	87	Cutlass Salon Coupe
4				**BUICK**
	B	R	35	Estate Wagon
		N	37	LeSabre Coupe
		P	37	LeSabre Custom Coupe
		Z	37	Riviera Coupe
		N	69	LeSabre Sedan
		P	69	LeSabre Custom Sedan
	C	V	37	Electra 225 Coupe
		U	37	Electra Park Avenue Coupe
		X	37	Electra Limited Coupe
		V	69	Electra 225 Sedan
		X	69	Electra Limited Sedan
		U	69	Electra Park Avenue Sedan

3A models added: 101277.

Issued: 091377

1978 AIR RESOURCES BOARD SUPPLEMENTAL DATA SHEET - GM FORMAT

Passenger Cars

Manufacturer: General Motors Corporation Executive Order No. A-6-117 Pg. 2

Engine Family 830M4AU Engine (CID) 350,403 Transm. _____

Exhaust Emission Control System AI, EGR, OC +10% (A/C) Yes ☒ No ☐

Eng. Code (CID)	Air Cond.	Distrib. Type HEI Mfgr.C,V Part No.	Fuel System 4V Mfgr. Part No.	EGR System Part No. Service	Inertia Wt. Class	Divisions	Basic Body	Trim	Body Type	Trans-mission	Tune-up Label & Page No.	Rev. Notes
11 (350)	W	Delco 1103266, 1103323	Rochester 17058553	17056389 No Service	4000	3	A		09	A-3	HL 4	C
						3	A		35			C
						3	A		47			C
						3	A		87			C
						3	B		37			
						3	B		69			
11a, 11b (350)		1103259, 1103346		17056382		3	A		09			C
						3	A		35			AC
						3	A		47			C
						3	A		87			C
						3	B		37			
						3	B		69			
12, 12a (350)		1103266, 1103323		17056390		2	B	L	37			B
						4	B	NP	37			A
						2	B	L	69			
						4	B	N	69			
					4500	234	B		35			
						2	B	NQ	37			
						4	B	Z	37			
						2	B	NQ	69			
						4	B	P	69			
						34	C		37			
						34	C		69			

Comments All models have special road load HP settings. See page one for abbreviations.

Date of Issue 091377 Revisions: A. Eng. Codes 11b, 12a added by RC 83-92 on 091477. B. Dist. PN corrected for EC 12, 12a; C. 3A models added to EC 11, 11a and 11b by RC 83-69; EC 13, 13a, 15 and 16 moved to Pg. 2A on 101277.

1978 AIR RESOURCES BOARD SUPPLEMENTAL DATA SHEET - GM FORMAT

Passenger Cars

Manufacturer: General Motors Corporation Executive Order No. A-6-117 Pg. 2A

Engine Family 830M4AU Engine (CID) 350,403 Transm. _____

Exhaust Emission Control System AI, EGR, OC +10% (A/C) Yes ☒ No ☐

Eng. Code (CID)	Air Cond.	Distrib. Type Note 1 Mfgr. Part No.	Fuel System 4V Mfgr. Part No.	EGR System Part No. Service	Inertia Wt. Class	Divisions	Basic Body	Trim	Body Type	Trans-mission	Tune-up Label & Page No.	Rev. Notes
13, 13a (403)	W	1103264, 1103325	17058553	17056394	4000	2	F		87	A-3	HO 4	A
					4500	234	B		35			B
						234	B		37			
						234	B		69			
						34	C		37			
						34	C		69			
15 (403)		1112990	17058555	17056395	5000	3	E		57			
16 (403)		1103313				3	E		57		HU 5	
21 (350)	W/O	Delco 1103266, 1103323	Rochester 17058553	17056389 No Service	4000	3	A		09		HL 4	C
						3	A		35			C
						3	A		47			C
						3	A		87			C
						3	B		37			
						3	B		69			
21a, 21b (350)		1103259, 1103346		17056382		3	A		09			C
						3	A		35			AC
						3	A		47			C
						3	A		87			C
						3	B		37			
						3	B		69			

Comments All models have special road load HP settings. See page one for abbreviations.

Note 1. HEI, C, V except EC 15 and 16 which are Electronic Spark Timing (EST).

Date of Issue 101277 Revisions since issue date of Pgs. 1 and 2:
A. Eng. Codes 13a, 21b added by RC 83-92 on 091477. B. Iner. Wt. Cl. was 4000 for 4BN37 before RC 83-67; C. 3A models added to EC 21, 21a, 21b by RC 83-69 on 101277.

1978 AIR RESOURCES BOARD SUPPLEMENTAL DATA SHEET - GM FORMAT

Passenger Cars

Manufacturer: General Motors Corporation Executive Order No. A-6-117 Pg. 3

Engine Family 830M4AU Engine (CID) 350, 403 Transm. _____

Exhaust Emission Control System AI, EGR, OC +10% (A/C) Yes ☒ No ☐

Eng. Code (CID)	Air Cond.	Distrib. Type Mfgr. Part No.	Fuel System 4V Mfgr. Part No.	EGR System Part No. Service	Inertia Wt. Class	Divisions	Basic Body	Trim	Body Type	Trans-mission	Tune-up Label & Page No.	Rev. Notes
22, 22a, (350)	W/O	1103266, 1103323	17058553	17056390	4000	2	B		37	A-3	HL 4	B
						4	B	NP	37			A
						2	B	L	69			
						4	B		69			
					4500	234	B		35			
						4	B	Z	37			
						2	B	NQ	69			
						34	C		37			C
						34	C		69			
23, 23a (403)		1103264, 1103325		17056394	4000	23	B		37		HO 5	
						4	B	NP	37			A
						23	B	L	69			
						4	B		69			
						2	F		87			
					4500	234	B		35			
						4	B	Z	37			
						2	B	NQ	69			
						3	B	N	69			
						34	C		37			C
						34	C		69			C

Comments All models have special road load HP settings. See page one for abbreviations.

Date of Issue 091377 Revisions: A. Eng. Codes 22a, 23a added by RC 83-92 on 091477. B. Dist. PN corrected for EC 22, 22a; C. Iner. Wt. Cl. was 4000 for 4C37 in EC 22a, 4CV and X37 and 4CV69 in EC 23a before RC83-67; EC 21, 21a, 21b moved to Pg. 2A on 101277.

1978 AIR RESOURCES BOARD SUPPLEMENTAL DATA SHEET - GM FORMAT

Passenger Cars

Manufacturer: General Motors Corporation Executive Order No. A-6-117 Pg. 4

Issued: 091377

3/16" HIGH LETTERS

HL
350 CU. IN.
830M4AU/8BFV

VEHICLE EMISSION CONTROL INFORMATION
GENERAL MOTORS CORPORATION

CATALYST - E.G.R. - A.I.R.
LOW ALTITUDE CERTIFICATION

TIMING (DEG. BTDC @ RPM)		20° @ 1100 (IN PARK)
SPARK PLUGS	GAP	.060 IN.
	TYPE	AC R46SZ
CARBURETOR SCREW (RPM)		550 (IN DRIVE)
FAST IDLE SCREW (RPM)		1000 (IN PARK)
SOLENOID SCREW (RPM)		650 (IN DRIVE)
CHOKE SETTING		2 N.R.

IDLE MIXTURE SCREWS ARE PRESET AND CAPPED AT FACTORY. DO NOT BREAK CAPS. ADJUSTMENT DURING TUNE UP IS NOT RECOMMENDED.

FOR MAJOR REPAIR, ADJUSTING MIXTURE SETTING BY OTHER THAN APPROVED SERVICE MANUAL PROCEDURE MAY VIOLATE FEDERAL AND/OR CALIFORNIA OR OTHER STATE LAWS.

SEE SERVICE MANUAL AND MAINTENANCE SCHEDULE II FOR ADDITIONAL INFORMATION.

SET PARKING BRAKE AND BLOCK DRIVE WHEELS

MAKE ADJUSTMENTS WITH ENGINE AT NORMAL OPERATING TEMPERATURE, CHOKE FULLY OPEN AND WHERE APPLICABLE AIR CONDITIONING OFF.

1. DISCONNECT MOLDED CONNECTOR FROM AIR CLEANER TVS SWITCH. PLUG VACUUM SOURCE (I) ON CONNECTOR AND REMOVE AIR CLEANER.
2. DISCONNECT VACUUM HOSES FROM PORTS (H), (K) AND (B) ON CARBURETOR AND PLUG PORTS.
3. SET TIMING AT SPECIFIED RPM, IN PARK.
4. ADJUST CARBURETOR IDLE SPEED SCREW TO SPECIFIED RPM, IN DRIVE.
5. ADJUST CARBURETOR FAST IDLE SPEED SCREW TO SPECIFIED RPM ON LOW STEP OF CAM, IN PARK.
6. ON AIR CONDITIONED CARS — AFTER COMPLETING ABOVE ADJUSTMENTS, DISCONNECT ELECTRICAL CONNECTOR AT A/C COMPRESSOR CLUTCH. TURN A/C SWITCH ON AND ADJUST SOLENOID (ENERGIZED) SCREW TO SPECIFIED RPM, IN DRIVE. TURN A/C SWITCH OFF. RECONNECT ELECTRICAL CONNECTOR.
7. RECONNECT HOSES TO PORTS (H), (K) AND (B) ON CARBURETOR.
8. INSTALL AIR CLEANER AND RECONNECT MOLDED CONNECTOR TO TVS SWITCH.

EMISSION HOSE ROUTING

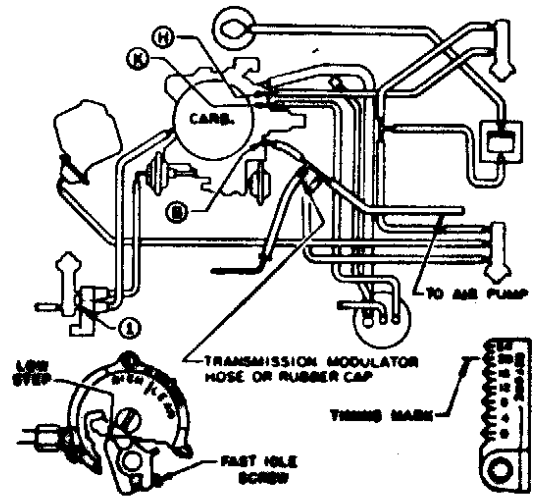

THIS VEHICLE CONFORMS TO U.S. EPA AND CALIFORNIA REGULATIONS APPLICABLE TO 1978 MODEL YEAR NEW MOTOR VEHICLES.

PRINTED IN U.S.A. PART NO. 560496

3/16" HIGH LETTERS

HO
403 CU. IN.
830M4AU/8BFV

VEHICLE EMISSION CONTROL INFORMATION
GENERAL MOTORS CORPORATION

CATALYST - E.G.R. - A.I.R.
LOW ALTITUDE CERTIFICATION

TIMING (DEG. BTDC @ RPM)		20° @ 1100 (IN PARK)
SPARK PLUGS	GAP	.060 IN.
	TYPE	AC R46SZ
CARBURETOR SCREW (RPM)		550 (IN DRIVE)
FAST IDLE SCREW (RPM)		1000 (IN PARK)
SOLENOID SCREW (RPM)		650 (IN DRIVE)
CHOKE SETTING		2 N.R.

IDLE MIXTURE SCREWS ARE PRESET AND CAPPED AT FACTORY. DO NOT BREAK CAPS. ADJUSTMENT DURING TUNE UP IS NOT RECOMMENDED.

FOR MAJOR REPAIR, ADJUSTING MIXTURE SETTING BY OTHER THAN APPROVED SERVICE MANUAL PROCEDURE MAY VIOLATE FEDERAL AND/OR CALIFORNIA OR OTHER STATE LAWS.

SEE SERVICE MANUAL AND MAINTENANCE SCHEDULE II FOR ADDITIONAL INFORMATION.

SET PARKING BRAKE AND BLOCK DRIVE WHEELS

MAKE ADJUSTMENTS WITH ENGINE AT NORMAL OPERATING TEMPERATURE, CHOKE FULLY OPEN AND WHERE APPLICABLE AIR CONDITIONING OFF.

1. DISCONNECT MOLDED CONNECTOR FROM AIR CLEANER TVS SWITCH. PLUG VACUUM SOURCE (I) ON CONNECTOR AND REMOVE AIR CLEANER.
2. DISCONNECT VACUUM HOSES FROM PORTS (H), (K) AND (B) ON CARBURETOR AND PLUG PORTS.
3. SET TIMING AT SPECIFIED RPM, IN PARK.
4. ADJUST CARBURETOR IDLE SPEED SCREW TO SPECIFIED RPM, IN DRIVE.
5. ADJUST CARBURETOR FAST IDLE SPEED SCREW TO SPECIFIED RPM ON LOW STEP OF CAM, IN PARK.
6. ON AIR CONDITIONED CARS — AFTER COMPLETING ABOVE ADJUSTMENTS, DISCONNECT ELECTRICAL CONNECTOR AT A/C COMPRESSOR CLUTCH. TURN A/C SWITCH ON AND ADJUST SOLENOID (ENERGIZED) SCREW TO SPECIFIED RPM, IN DRIVE. TURN A/C SWITCH OFF. RECONNECT ELECTRICAL CONNECTOR.
7. RECONNECT HOSES TO PORTS (H), (K) AND (B) ON CARBURETOR.
8. INSTALL AIR CLEANER AND RECONNECT MOLDED CONNECTOR TO TVS SWITCH.

EMISSION HOSE ROUTING

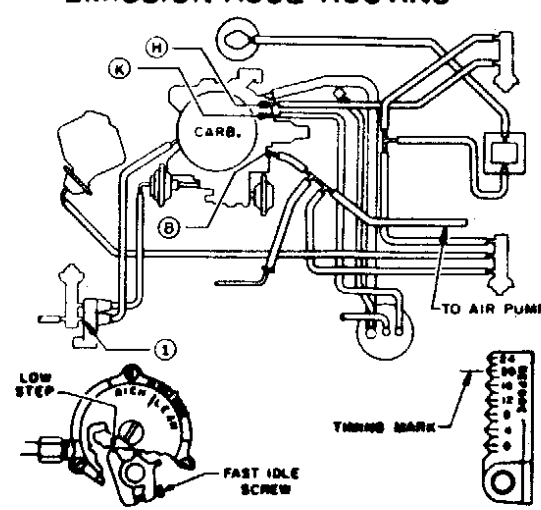

THIS VEHICLE CONFORMS TO U.S. EPA AND CALIFORNIA REGULATIONS APPLICABLE TO 1978 MODEL YEAR NEW MOTOR VEHICLES.

PRINTED IN U.S.A. PART NO. 560499

1978 AIR RESOURCES BOARD SUPPLEMENTAL DATA SHEET - GM FORMAT

Passenger Cars

Manufacturer: General Motors Corporation Executive Order No. A-6-117 Pg. 5

Issued: 091377

3/16" HIGH LETTERS

HU
403 CU. IN.
830 M4AU/BBFV

VEHICLE EMISSION CONTROL INFORMATION
GENERAL MOTORS CORPORATION

CATALYST-E.G.R.-A.I.R.
LOW ALTITUDE CERTIFICATION

TIMING (DEG. BTDC @ RPM)		22° @ 1100 (IN PARK)
SPARK PLUGS	GAP	.060 IN.
	TYPE	AC R46SZ
CARBURETOR SCREW (RPM)		600 (IN DRIVE)
FAST IDLE SCREW (RPM)		1000 (IN PARK)
SOLENOID SCREW (RPM)		650 (IN DRIVE)
CHOKE SETTING		2 N.R.

IDLE MIXTURE SCREWS ARE PRESET AND CAPPED AT FACTORY. DO NOT BREAK CAPS. ADJUSTMENT DURING TUNE UP IS NOT RECOMMENDED.

FOR MAJOR REPAIR, ADJUSTING MIXTURE SETTING BY OTHER THAN APPROVED SERVICE MANUAL PROCEDURE MAY VIOLATE FEDERAL AND/OR CALIFORNIA OR OTHER STATE LAWS.

SEE SERVICE MANUAL AND MAINTENANCE SCHEDULE II FOR ADDITIONAL INFORMATION.

SET PARKING BRAKE AND BLOCK DRIVE WHEELS

MAKE ADJUSTMENTS WITH ENGINE AT NORMAL OPERATING TEMPERATURE, CHOKE FULLY OPEN AND A/C SWITCH OFF EXCEPT WHERE NOTED.

1. DISCONNECT MOLDED CONNECTOR FROM AIR CLEANER TVS SWITCH. PLUG VACUUM SOURCE (1) ON CONNECTOR AND REMOVE AIR CLEANER.
2. GROUND CONTROLLER (PROCESSOR) REFERENCE MODE TIMING LEAD (PURPLE WIRE UNDER DASH) TO BODY WITH JUMPER WIRE.
3. SET TIMING AT SPECIFIED RPM IN PARK, THEN DISCONNECT JUMPER WIRE.
4. DISCONNECT VACUUM HOSES FROM PORTS (H) AND (K) ON CARBURETOR AND PLUG PORTS.
5. ADJUST CARBURETOR IDLE SPEED SCREW TO SPECIFIED RPM IN DRIVE.
6. ADJUST CARBURETOR FAST IDLE SPEED SCREW TO SPECIFIED RPM ON LOW STEP OF CAM IN PARK.
7. AFTER COMPLETING ABOVE ADJUSTMENTS, DISCONNECT ELECTRICAL CONNECTOR AT A/C COMPRESSOR CLUTCH. TURN A/C SWITCH ON AND ADJUST SOLENOID (ENERGIZED) SCREW TO SPECIFIED RPM IN DRIVE. TURN A/C SWITCH OFF. RECONNECT ELECTRICAL CONNECTOR.
8. RECONNECT HOSES TO PORTS (H) AND (K) ON CARBURETOR.
9. INSTALL AIR CLEANER AND RECONNECT MOLDED CONNECTOR TO TVS SWITCH.

EMISSION HOSE ROUTING

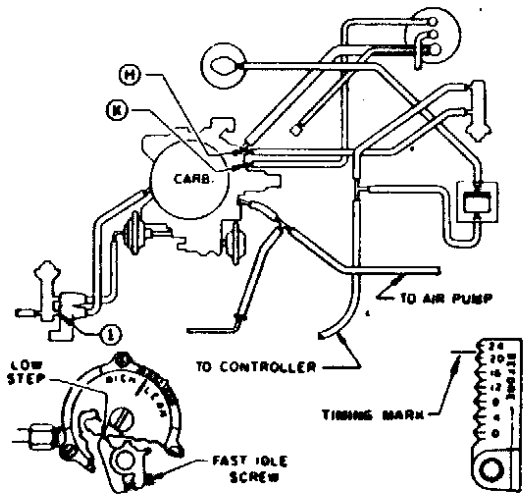

PRINTED IN U.S.A.

THIS VEHICLE CONFORMS TO U.S. EPA AND CALIFORNIA REGULATIONS APPLICABLE TO 1978 MODEL YEAR NEW MOTOR VEHICLES.

PART NO. 560507