State of California
AIR RESOURCES BOARD

EXECUTIVE ORDER A-6-140
Relating to Certification of New Motor Vehicles

GENERAL MOTORS CORPORATION

Pursuant to the authority vested in the Air Resources Board by Health and Safety Code Sections 43100, 43102, 43103, and 43835; and

Pursuant to the authority vested in the undersigned by Health and Safety Code Sections 39515 and 39516 and Executive Orders G-45-3 and G-45-4;

IT IS ORDERED AND RESOLVED: That General Motors Corporation exhaust emission control systems for 1979 model-year gasoline-powered passenger cars are certified for the vehicles described below:

Engine Family	Displacement Cubic Inches	Exhaust Emission Control Systems (Special Features)
930H2AU	260	Air Injection, Exhaust Gas Recirculation, Oxidation Catalyst

Vehicle Models, Transmissions, Engine Codes and Evaporative Emission Control Families as listed on attachments.

The following are the certification emission values to be listed on the window decal required by California Assembly-Line Test Procedures for 1979 model-year vehicles:

Engine Family	Hydrocarbons Grams per Mile	Carbon Monoxide Grams per Mile	Nitrogen Oxides Grams per Mile
930H2AU	.25	5.5	1.1

BE IT FURTHER RESOLVED: That the listed vehicle models also comply with "California Evaporative Emission Standards and Test Procedures for 1978 and Subsequent Model Gasoline-Powered Motor Vehicles except Motorcycles".

BE IT FURTHER RESOLVED: That the listed vehicle models also comply with the Board's "Specifications for Fill Pipes and Openings of Motor Vehicle Fuel Tanks" (Title 13, California Administrative Code, Section 2290) for the aforementioned model year.

Vehicles certified under this Executive Order must conform to all applicable California emission regulations.

The Department of Motor Vehicles, the California Highway Patrol, and the Bureau of Automotive Repair will be notified by copy of this order and attachment.

Executed at El Monte, California this 16 day of August, 1978.

G. C. Hass, Chief
Vehicle Emissions Control Division

1979 AIR RESOURCES BOARD SUPPLEMENTAL DATA SHEET

Manufacturer GENERAL MOTORS CORP. Executive Order No. A-6-140 Page 1

Engine Family 930H2AU Engine (CID) 260

ABBREVIATIONS

Ignition System
CA-Centrifugal Advance
EI-Electronic Ignition
ESAC
VA-Vacuum Advance
VR-Vacuum Retard

Fuel System
EFI, MFI
nV-nVenturi Carburetor
VV-Variable Venturi

Exhaust Emissions Control System
AI-Air Injection
CCAV-Comb. Chamber Air Valve
EFI-Electronic Fuel Injection
EGR-Exhaust Gas Recirculation
EM-Engine Modification

ESAC-Electronic Spark Advance Control
MFI-Mechanical Fuel Injection

OC-Oxidation Catalyst
PAI-Pulse Air Injection
TC-Turbo Charged
TR-Thermal Reactor
TWC-Three Way Catalyst (Feedback Control)
WOC-Warm-up Oxidation Catalyst

Evaporative Emission Family 9B3-3

Division	Basic Body	Trim	Body Type	
3				OLDSMOBILE
	A	G	09	Cutlass Salon Sedan
	A	G	87	Cutlass Salon Coupe
	A	J	09	Cutlass Salon Brougham Sedan
	A	J	87	Cutlass Salon Brougham Coupe
	A	R	47	Cutlass Supreme Coupe
	A	K	47	Cutlass Calais Coupe
	A	M	47	Cutlass Supreme Brougham Coupe

Issued: 081778.

AIR RESOURCES BOARD 1979 SUPPLEMENTAL DATA SHEET - GM FORMAT
Passenger Cars

Manufacturer: GENERAL MOTORS CORPORATION Executive Order No. A-6-140 Pg. 2

Engine Family 930H2AU Engine CID 260 Transm. A-3

Exhaust Emission Control System AI, EGR, OC +10% (A/C) Yes [X] No [ ]

Eng. Code	Air Cond.	Ign.Syst. EI,CA,VA Distrib. Part No.	Fuel System 2V Carb. Part No.	EGR Valve Part No.	Inertia Wt. Class	Divisions	Basic Body	Trim	Body Type	Trans-mission	Tune-up Label & Page No.	Rev. Notes
1	W	Delco Remy 1103396	Rochester 17059450	17056383	3500	3 3 3	A A A		09 47 87	A-3	SD 3	
1a											OT 4	A B
2	WO					3 3 3	A A A		09 47 87		SD 3	
2a											OT 4	A B

Comments: See page one for abbreviations and evaporative emission family identification. Please refer to manufacturer's HP lists for correct dyno test HP settings based on model, equipment and inertia weight class.

Date of Issue: 081778 Revisions: A. EC 1a and 2a added by RC 93-102, on 032179.
B. Labels for EC 1a & 2a corrected, were SD, on 111479.

SD
4.3 LITRE
930H2AU/9B3-3

VEHICLE EMISSION CONTROL INFORMATION

GENERAL MOTORS CORPORATION

CATALYST - E.G.R. - A.I.R.

LOW ALTITUDE CERTIFICATION

TIMING(DEG. BTDC @ RPM)		18° @1100 (IN PARK)
SPARK PLUGS	GAP	.060 IN.
	TYPE	AC R46SZ
CARBURETOR SCREW(RPM)		500 (IN DRIVE)
FAST IDLE SCREW(RPM)		800 (IN PARK)
SOLENOID SCREW(RPM)		625 (IN DRIVE)
CHOKE SETTING		2 N.R.

SET PARKING BRAKE AND BLOCK DRIVE WHEELS.

MAKE ADJUSTMENTS WITH ENGINE AT NORMAL OPERATING TEMPERATURE, CHOKE FULLY OPEN AND WHERE APPLICABLE AIR CONDITIONING OFF.

1. DISCONNECT MOLDED CONNECTOR FROM AIR CLEANER TVS SWITCH. PLUG VACUUM SOURCE (I) ON CONNECTOR AND REMOVE AIR CLEANER.
2. DISCONNECT VACUUM HOSES FROM PORTS (H), (K) AND (N) ON CARBURETOR AND PLUG PORTS.
3. SET TIMING AT SPECIFIED RPM, IN PARK.
4. ADJUST CARBURETOR IDLE SPEED SCREW TO SPECIFIED RPM, IN DRIVE.
5. ADJUST CARBURETOR FAST IDLE SPEED SCREW TO SPECIFIED RPM ON LOW STEP OF CAM, IN PARK.
6. ON AIR CONDITIONED CARS — AFTER COMPLETING ABOVE ADJUSTMENTS, DISCONNECT ELECTRICAL CONNECTOR AT A/C COMPRESSOR CLUTCH. TURN A/C SWITCH ON AND ADJUST SOLENOID (ENERGIZED) SCREW TO SPECIFIED RPM, IN DRIVE. TURN ENGINE OFF. RECONNECT ELECTRICAL CONNECTOR.
7. RECONNECT VACUUM HOSES TO PORTS (H), (K) AND (N) ON CARBURETOR.
8. INSTALL AIR CLEANER AND RECONNECT MOLDED CONNECTOR TO TVS SWITCH.

IDLE MIXTURE SCREWS ARE PRESET AND SEALED AT FACTORY. PROVISION FOR ADJUSTMENT DURING TUNE-UP IS NOT PROVIDED. FOR MAJOR REPAIR, ADJUSTING MIXTURE SETTING BY OTHER THAN APPROVED SERVICE MANUAL PROCEDURE MAY VIOLATE FEDERAL AND/OR CALIFORNIA OR OTHER STATE LAWS.

SEE SERVICE MANUAL AND MAINTENANCE SCHEDULE II FOR ADDITIONAL INFORMATION.

EMISSION HOSE ROUTING

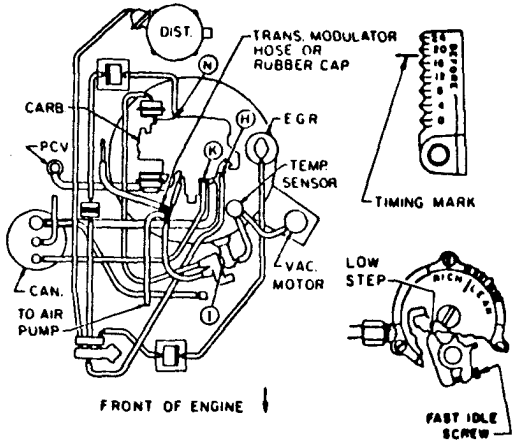

PRINTED IN U.S.A.

THIS VEHICLE CONFORMS TO U.S. EPA AND CALIFORNIA REGULATIONS APPLICABLE TO 1979 MODEL YEAR NEW PASSENGER CARS.

PART NO. 22500527

OT
4.3 LITRE
930H2AU/983-3

VEHICLE EMISSION CONTROL INFORMATION

GENERAL MOTORS CORPORATION

SET PARKING BRAKE AND BLOCK DRIVE WHEELS.

MAKE ADJUSTMENTS WITH ENGINE AT NORMAL OPERATING TEMPERATURE, CHOKE FULLY OPEN AND WHERE APPLICABLE AIR CONDITIONING OFF.

1. DISCONNECT MOLDED CONNECTOR FROM AIR CLEANER TVS SWITCH. PLUG VACUUM SOURCE (I) ON CONNECTOR AND REMOVE AIR CLEANER.
2. DISCONNECT VACUUM HOSES FROM PORTS (H), (K) AND (N) ON CARBURETOR AND PLUG PORTS.
3. SET TIMING AT SPECIFIED RPM, IN PARK.
4. ADJUST CARBURETOR IDLE SPEED SCREW TO SPECIFIED RPM, IN DRIVE.
5. ADJUST CARBURETOR FAST IDLE SPEED SCREW TO SPECIFIED RPM ON LOW STEP OF CAM, IN PARK.
6. ON AIR CONDITIONED CARS — AFTER COMPLETING ABOVE ADJUSTMENTS, DISCONNECT ELECTRICAL CONNECTOR AT A/C COMPRESSOR CLUTCH. TURN A/C SWITCH ON AND ADJUST SOLENOID (ENERGIZED) SCREW TO SPECIFIED RPM, IN DRIVE. TURN ENGINE OFF. RECONNECT ELECTRICAL CONNECTOR.
7. RECONNECT VACUUM HOSES TO PORTS (H), (K) AND (N) ON CARBURETOR.
8. INSTALL AIR CLEANER AND RECONNECT MOLDED CONNECTOR TO TVS SWITCH.

CATALYST - E.G.R. - A.I.R.

LOW ALTITUDE CERTIFICATION

TIMING (DEG. BTDC @ RPM)		18° @ 1100 (IN PARK)
SPARK PLUGS	GAP	.060 IN.
	TYPE	AC R46SZ
CARBURETOR SCREW (RPM)		500 (IN DRIVE)
FAST IDLE SCREW (RPM)		800 (IN PARK)
SOLENOID SCREW (RPM)		625 (IN DRIVE)
CHOKE SETTING		2 N.R.

IDLE MIXTURE SCREWS ARE PRESET AND SEALED AT FACTORY. PROVISION FOR ADJUSTMENT DURING TUNE-UP IS NOT PROVIDED. FOR MAJOR REPAIR, ADJUSTING MIXTURE SETTING BY OTHER THAN APPROVED SERVICE MANUAL PROCEDURE MAY VIOLATE FEDERAL AND/OR CALIFORNIA OR OTHER STATE LAWS.

SEE SERVICE MANUAL AND MAINTENANCE SCHEDULE II FOR ADDITIONAL INFORMATION.

EMISSION HOSE ROUTING

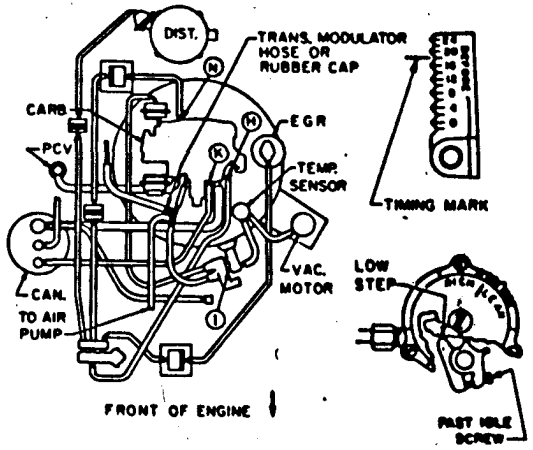

PRINTED IN U.S.A.

THIS VEHICLE CONFORMS TO U.S. EPA AND CALIFORNIA REGULATIONS APPLICABLE TO 1979 MODEL YEAR NEW PASSENGER CARS.

PART NO. 22506032