State of California
AIR RESOURCES BOARD

EXECUTIVE ORDER A-6-144
Relating to Certification of New Motor Vehicles

GENERAL MOTORS CORPORATION

Pursuant to the authority vested in the Air Resources Board by Health and Safety Code Sections 43100, 43102, 43103, and 43835; and

Pursuant to the authority vested in the undersigned by Health and Safety Code Sections 39515 and 39516 and Executive Orders G-45-3 and G-45-4;

IT IS ORDERED AND RESOLVED: That General Motors Corporation exhaust emission control systems for 1979 model-year gasoline-powered passenger cars are certified for the vehicles described below:

Engine Family	Displacement Cubic Inches	Exhaust Emission Control Systems (Special Features)
930M4AU	350, 403	Air Injection Exhaust Gas Recirculation Oxidation Catalyst

Vehicle Models, Transmissions, Engine Codes and Evaporative Emission Control Families as listed on attachments.

The following are the certification emission values to be listed on the window decal required by California Assembly-Line Test Procedures for 1979 model-year vehicles:

Engine Family	Hydrocarbons Grams per Mile	Carbon Monoxide Grams per Mile	Nitrogen Oxides Grams per Mile
930M4AU	0.34	8.0	1.2

BE IT FURTHER RESOLVED: That the listed vehicle models also comply with "California Evaporative Emission Standards and Test Procedures for 1978 and Subsequent Model Gasoline-Powered Motor Vehicles except Motorcycles".

BE IT FURTHER RESOLVED: That the listed vehicle models also comply with the Board's "Specifications for Fill Pipes and Openings of Motor Vehicle Fuel Tanks" (Title 13, California Administrative Code, Section 2290) for the aforementioned model year.

Vehicles certified under this Executive Order must conform to all applicable California emission regulations.

The Department of Motor Vehicles, the California Highway Patrol, and the Bureau of Automotive Repair will be notified by copy of this order and attachment.

Executed at El Monte, California this 18 day of August, 1978.

G. C. Hass

G. C. Hass, Chief
Vehicle Emissions Control Division

1979 AIR RESOURCES BOARD SUPPLEMENTAL DATA SHEET

Manufacturer General Motors Corporation Executive Order No. A-144 Page 1

Engine Family 930M4AU Engine (CID) 350, 403

ABBREVIATIONS

Ignition System
CA-Centrifugal Advance
EI-Electronic Ignition
ESAC
VA-Vacuum Advance
VR-Vacuum Retard

Fuel System
EFI, MFI
nV-nVenturi Carburetor
VV-Variable Venturi

Exhaust Emissions Control System
AI-Air Injection
CCAV-Com. Chamber Air Valve
EFI-Electronic Fuel Injection
EGR-Exhaust Gas Recirculation
EM-Engine Modification

ESAC-Electronic Spark Advance Control
MFI-Mechanical Fuel Injection

OC-Oxidation Catalyst
PAI-Pulse Air Injection
TC-Turbo Charged
TR-Thermal Reactor
TWC-Three Way Catalyst (Feedback Control)
SOC-Warm-Up Oxidation Catalyst

Evaporative Family: 9B4-3

DIVISION	BASIC BODY	TRIM	BODY TYPE	
				PONTIAC
2	F	U	87	Formula
		W	87	Trans Am
		X	87	10th Anniversary Limited Edition Trans Am
	B	L	37	Catalina Coupe
			69	Catalina Sedan
		N	37	Bonneville Coupe
			69	Bonneville Sedan
		Q	37	Bonneville Brougham Coupe
			69	Bonneville Brougham Sedan
		L	35	Catalina Safari Station Wagon
		N	35	Bonneville Safari Station Wagon
				OLDSMOBILE
3	A	R	47	Cutlass Supreme Coupe
	B	L	37	Delta 88 Coupe
			69	Delta 88 Sedan
		N	37	Delta 88 Royale Coupe
			69	Delta 88 Royale Sedan
		Q	35	Custom Cruiser
	C	V	37	Ninety Eight Luxury Coupe
			69	Ninety Eight Luxury Sedan
		X	37	Ninety Eight Regency Coupe
			69	Ninety Eight Regency Sedan
	E	Z	57	Toronado Brougham Coupe
				BUICK
4	B	N	37	LeSabre Coupe
			69	LeSabre Sedan
		P	37	LeSabre Limited Coupe
			69	LeSabre Limited Sedan
		R	35	Estate Wagon
	C	V	37	Electra 225 Coupe
			69	Electra 225 Sedan
		X	37	Electra Limited Coupe
			69	Electra Limited Sedan
		U	37	Electra Park Avenue Coupe
			69	Electra Park Avenue Sedan
	E	Y	57	Riviera Sport Coupe
		Z	57	Riviera

Model 2FX87 added by RC 93-123;
Model 3AR47 Supreme was
Model 3AK47 Calais before
RC93-101 (Rev. 1), on 121178.

Model 3AK47 added by
RC 93-101, on 111378.
Issued: 082178.

AIR RESOURCES BOARD 1979 SUPPLEMENTAL DATA SHEET - GM FORMAT
Passenger Cars

Manufacturer: GENERAL MOTORS CORPORATION Executive Order No. A-6-144

Engine Family 930M4AU Engine CID 350, 403 Transm. A-3

Exhaust Emission Control System AI/EGR/OC +10% (A/C) Yes [X] No [ ]

Eng. Code (CID)	Air Cond.	Ign.Syst. EI,CA,VA Dist. Part No.	Fuel System 4V Carburetor Part No.	EGR Valve Part No.	Inertia Wt. Class	Divisions	Basic Body	Trim	Body Type	Trans-mission	Tune-up Label & Page No.	Rev. Notes
11b, 11c (350)	W	Delco Remy 1103346	Rochester 17059553	17056382	4000	3 3	B B		37 69	A-3	SR 5	A B
12a, 12b (350)				17061580		4 2 4	A B B	R L	47 37 37			CE B
					4500	234 2 2 2 4 34 34	B B B B C C	N Q	35 37 37 69 37 69			
13a, 13b (403)		1103325		17061583		234 234 234 34 34	B B B C C		35 37 69 37 69		SU 5	B
14a, 14b (403)				17061575	4000	2	F		87		OF 5	B
16, 16a (350)		1103323	17059553, 17059554	17061577		34	E		57		OC 4	D B

Comments: See page one for abbreviations and evaporative emission family identification. Please refer to manufacturer's HP lists for correct dyno test HP settings based on model, equipment and inertia weight class.

Date of Issue: 082178. Revisions: A. E.C. 11a deleted, 11b added by RC 93-2, on 090178. B. E.C. 11c, 12b, 13b, 14b, 16a added by RC 93-91, on 101678. C. Model 4AK47 added by RC 93-101, on 111378. D. Carb. 17059554 added by ML-9P784, on 111378. E. Model 3AK47 Corrected to 3AR47 by RC 93-101 (Rev. 1), on 121178.

AIR RESOURCES BOARD 1979 SUPPLEMENTAL DATA SHEET - GM FORMAT
Passenger Cars

Manufacturer: GENERAL MOTORS CORPORATION Executive Order No. A-6- 144

Engine Family 930M4AU Engine CID 350,403 Transm. A-3

Exhaust Emission Control System AI/EGR/OC +10% (A/C) Yes [X] No [ ]

Eng. Code (CID)	Air Cond.	Ign.Syst. EI,CA,VA Dist. Part No.	Fuel System 4V Carburetor Part No.	EGR Valve Part No.	Inertia Wt. Class	Divisions	Basic Body	Trim	Body Type	Trans-mission	Tune-up Label & Page No.	Rev. Notes
21b,c (350)	WO	Delco Remy 1103346	Rochester 17059553	17056382	4000	3 3	B B		37 69	A-3	SR 5	AB
22a, 22b (350)				17061580		4 2 4 2 4	A B B B	R L 	47 37 69 69			CD B
					4500	234 2 2 34 34	B B B C C	 N Q 	35 69 69 37 69			
23a, 23b (403)		1103325		17061583	4000	234 2 3 4	B B B B	 L N	37 69 69 69		SU 5	B
					4500	234 2 2 4 34 34	B B B B C C	 N Q P 	35 69 69 69 37 69			
24a, 24b (403)				17061575	4000	2	F		87		OF 4	B

Comments: See page one for abbreviations and evaporative emission family identification. Please refer to manufacturer's HP lists for correct dyno test HP settings based on model, equipment and inertia weight class.

Date of Issue: 082178. Revisions: A. E.C. 21a deleted, 21b added by RC 93-2, on 090178. B. E.C. 21c, 22b, 23b, 24b added by RC 93-91, on 101678. C. Model 4AK47 added by RC 93-101, on 111378. D. Model 3AK47 corrected to 3AR47 by RC 93-101 (Rev. 1), on 121178.

OC
5.7 LITRE
930M4AU/9B4-3

VEHICLE EMISSION CONTROL INFORMATION
GENERAL MOTORS CORPORATION

CATALYST-E.G.R.-A.I.R.
LOW ALTITUDE CERTIFICATION

TIMING(DEG. BTDC @ RPM)		20° @1100 (IN PARK)
SPARK PLUGS	GAP	.060 IN.
	TYPE	AC R46SZ
CARBURETOR SCREW(RPM)		500 (IN DRIVE)
FAST IDLE SCREW(RPM)		1000 (IN PARK)
SOLENOID SCREW(RPM)		600 (IN DRIVE)
CHOKE SETTING		2 N.R.

IDLE MIXTURE SCREWS ARE PRESET AND SEALED AT FACTORY. PROVISION FOR ADJUSTMENT DURING TUNE-UP IS NOT PROVIDED. FOR MAJOR REPAIR, ADJUSTING MIXTURE SETTING BY OTHER THAN APPROVED SERVICE MANUAL PROCEDURE MAY VIOLATE FEDERAL AND/OR CALIFORNIA OR OTHER STATE LAWS.

SEE SERVICE MANUAL AND MAINTENANCE SCHEDULE II FOR ADDITIONAL INFORMATION.

SET PARKING BRAKE AND BLOCK DRIVE WHEELS

MAKE ADJUSTMENTS WITH ENGINE AT NORMAL OPERATING TEMPERATURE, CHOKE FULLY OPEN AND WHERE APPLICABLE AIR CONDITIONING OFF.

1. DISCONNECT MOLDED CONNECTOR FROM AIR CLEANER TVS SWITCH. PLUG VACUUM SOURCE Ⓘ ON CONNECTOR AND REMOVE AIR CLEANER.
2. DISCONNECT VACUUM HOSES FROM PORTS Ⓗ, Ⓚ AND Ⓑ ON CARBURETOR AND PLUG PORTS.
3. SET TIMING AT SPECIFIED RPM, IN PARK.
4. ADJUST CARBURETOR IDLE SPEED SCREW TO SPECIFIED RPM, IN DRIVE.
5. ADJUST CARBURETOR FAST IDLE SPEED SCREW TO SPECIFIED RPM ON LOW STEP OF CAM, IN PARK.
6. ON AIR CONDITIONED CARS — AFTER COMPLETING ABOVE ADJUSTMENTS, DISCONNECT ELECTRICAL CONNECTOR AT A/C COMPRESSOR CLUTCH. TURN A/C SWITCH ON AND ADJUST SOLENOID (ENERGIZED) SCREW TO SPECIFIED RPM, IN DRIVE. TURN ENGINE OFF. RECONNECT ELECTRICAL CONNECTOR.
7. RECONNECT VACUUM HOSES TO PORTS Ⓗ, Ⓚ AND Ⓑ ON CARBURETOR.
8. INSTALL AIR CLEANER AND RECONNECT MOLDED CONNECTOR TO TVS SWITCH.

EMISSION HOSE ROUTING

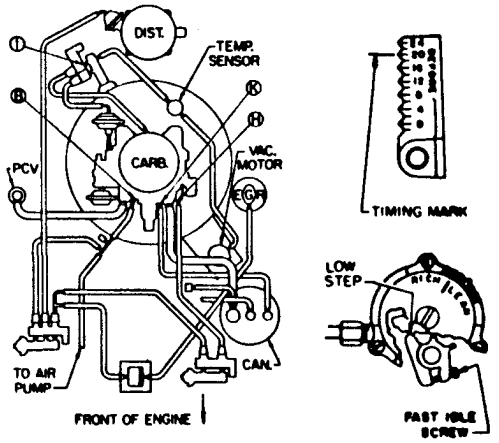

THIS VEHICLE CONFORMS TO U.S. EPA AND CALIFORNIA REGULATIONS APPLICABLE TO 1979 MODEL YEAR NEW PASSENGER CARS.

PRINTED IN U.S.A. PART NO. 22500548

OF
6.6 LITRE
930M4AU/9B4-3

VEHICLE EMISSION CONTROL INFORMATION
GENERAL MOTORS CORPORATION

CATALYST-E.G.R.-A.I.R.
LOW ALTITUDE CERTIFICATION

TIMING(DEG. BTDC @ RPM)		18° @1100 (IN PARK)
SPARK PLUGS	GAP	.060 IN.
	TYPE	AC R46SZ
CARBURETOR SCREW(RPM)		500 (IN DRIVE)
FAST IDLE SCREW(RPM)		1000 (IN PARK)
SOLENOID SCREW(RPM)		600 (IN DRIVE)
CHOKE SETTING		2 N.R.

IDLE MIXTURE SCREWS ARE PRESET AND SEALED AT FACTORY. PROVISION FOR ADJUSTMENT DURING TUNE-UP IS NOT PROVIDED. FOR MAJOR REPAIR, ADJUSTING MIXTURE SETTING BY OTHER THAN APPROVED SERVICE MANUAL PROCEDURE MAY VIOLATE FEDERAL AND/OR CALIFORNIA OR OTHER STATE LAWS.

SEE SERVICE MANUAL AND MAINTENANCE SCHEDULE II FOR ADDITIONAL INFORMATION.

SET PARKING BRAKE AND BLOCK DRIVE WHEELS

MAKE ADJUSTMENTS WITH ENGINE AT NORMAL OPERATING TEMPERATURE, CHOKE FULLY OPEN AND WHERE APPLICABLE AIR CONDITIONING OFF.

1. DISCONNECT MOLDED CONNECTOR FROM AIR CLEANER TVS SWITCH. PLUG VACUUM SOURCE Ⓘ ON CONNECTOR AND REMOVE AIR CLEANER.
2. DISCONNECT VACUUM HOSES FROM PORTS Ⓗ, Ⓚ AND Ⓑ ON CARBURETOR AND PLUG PORTS.
3. SET TIMING AT SPECIFIED RPM, IN PARK.
4. ADJUST CARBURETOR IDLE SPEED SCREW TO SPECIFIED RPM, IN DRIVE.
5. ADJUST CARBURETOR FAST IDLE SPEED SCREW TO SPECIFIED RPM ON LOW STEP OF CAM, IN PARK.
6. ON AIR CONDITIONED CARS — AFTER COMPLETING ABOVE ADJUSTMENTS, DISCONNECT ELECTRICAL CONNECTOR AT A/C COMPRESSOR CLUTCH. TURN A/C SWITCH ON AND ADJUST SOLENOID (ENERGIZED) SCREW TO SPECIFIED RPM, IN DRIVE. TURN ENGINE OFF. RECONNECT ELECTRICAL CONNECTOR.
7. RECONNECT VACUUM HOSES TO PORTS Ⓗ, Ⓚ AND Ⓑ ON CARBURETOR.
8. INSTALL AIR CLEANER AND RECONNECT MOLDED CONNECTOR TO TVS SWITCH.

EMISSION HOSE ROUTING

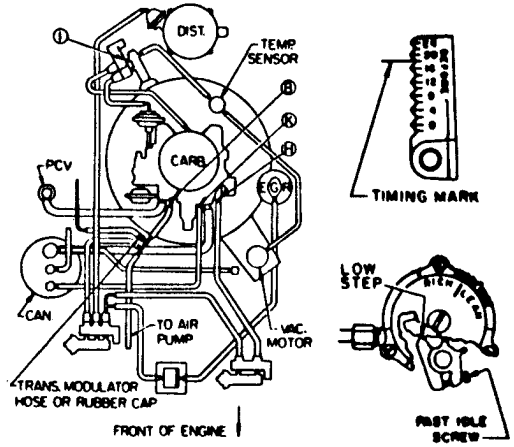

THIS VEHICLE CONFORMS TO U.S. EPA AND CALIFORNIA REGULATIONS APPLICABLE TO 1979 MODEL YEAR NEW PASSENGER CARS.

PRINTED IN U.S.A. PART NO. 22501770

E.O. A-6-144 S.D.Sheet 4
Eng. Fam. 930M4AU

Issued:
082178.

SR
5.7 LITRE
930M4AU/984-3

VEHICLE EMISSION CONTROL INFORMATION

GENERAL MOTORS CORPORATION

SET PARKING BRAKE AND BLOCK DRIVE WHEELS

MAKE ADJUSTMENTS WITH ENGINE AT NORMAL OPERATING TEMPERATURE, CHOKE FULLY OPEN AND WHERE APPLICABLE AIR CONDITIONING OFF.

1. DISCONNECT MOLDED CONNECTOR FROM AIR CLEANER TVS SWITCH. PLUG VACUUM SOURCE Ⓘ ON CONNECTOR AND REMOVE AIR CLEANER.
2. DISCONNECT VACUUM HOSES FROM PORTS Ⓗ, Ⓚ AND Ⓑ ON CARBURETOR AND PLUG PORTS.
3. SET TIMING AT SPECIFIED RPM, IN PARK.
4. ADJUST CARBURETOR IDLE SPEED SCREW TO SPECIFIED RPM, IN DRIVE.
5. ADJUST CARBURETOR FAST IDLE SPEED SCREW TO SPECIFIED RPM ON LOW STEP OF CAM, IN PARK.
6. ON AIR CONDITIONED CARS — AFTER COMPLETING ABOVE ADJUSTMENTS, DISCONNECT ELECTRICAL CONNECTOR AT A/C COMPRESSOR CLUTCH. TURN A/C SWITCH ON AND ADJUST SOLENOID (ENERGIZED) SCREW TO SPECIFIED RPM, IN DRIVE. TURN ENGINE OFF. RECONNECT ELECTRICAL CONNECTOR.
7. RECONNECT VACUUM HOSES TO PORTS Ⓗ, Ⓚ AND Ⓑ ON CARBURETOR.
8. INSTALL AIR CLEANER AND RECONNECT MOLDED CONNECTOR TO TVS SWITCH.

CATALYST-E.G.R.-A.I.R.

LOW ALTITUDE CERTIFICATION

TIMING (DEG. BTDC @ RPM)		20° @ 1100 (IN PARK)
SPARK PLUGS	GAP	.060 IN.
	TYPE	AC R46SZ
CARBURETOR SCREW (RPM)		500 (IN DRIVE)
FAST IDLE SCREW (RPM)		1000 (IN PARK)
SOLENOID SCREW (RPM)		600 (IN DRIVE)
CHOKE SETTING		2 N.R.

IDLE MIXTURE SCREWS ARE PRESET AND SEALED AT FACTORY. PROVISION FOR ADJUSTMENT DURING TUNE-UP IS NOT PROVIDED. FOR MAJOR REPAIR, ADJUSTING MIXTURE SETTING BY OTHER THAN APPROVED SERVICE MANUAL PROCEDURE MAY VIOLATE FEDERAL AND/OR CALIFORNIA OR OTHER STATE LAWS.

SEE SERVICE MANUAL AND MAINTENANCE SCHEDULE II FOR ADDITIONAL INFORMATION.

EMISSION HOSE ROUTING

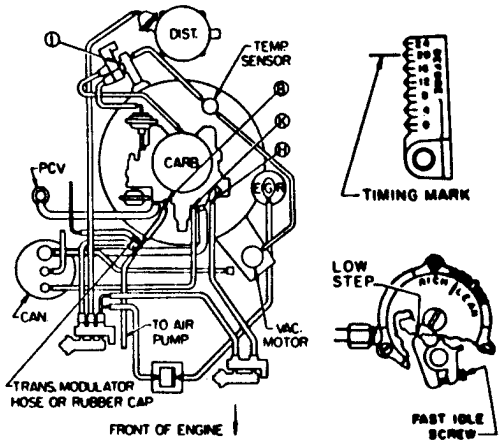

THIS VEHICLE CONFORMS TO U.S. EPA AND CALIFORNIA REGULATIONS APPLICABLE TO 1979 MODEL YEAR NEW PASSENGER CARS.

PRINTED IN U.S.A. PART NO. 22500538

SU
6.6 LITRE
930M4AU/984-3

VEHICLE EMISSION CONTROL INFORMATION

GENERAL MOTORS CORPORATION

SET PARKING BRAKE AND BLOCK DRIVE WHEELS

MAKE ADJUSTMENTS WITH ENGINE AT NORMAL OPERATING TEMPERATURE, CHOKE FULLY OPEN AND WHERE APPLICABLE AIR CONDITIONING OFF.

1. DISCONNECT MOLDED CONNECTOR FROM AIR CLEANER TVS SWITCH. PLUG VACUUM SOURCE Ⓘ ON CONNECTOR AND REMOVE AIR CLEANER.
2. DISCONNECT VACUUM HOSES FROM PORTS Ⓗ, Ⓚ AND Ⓑ ON CARBURETOR AND PLUG PORTS.
3. SET TIMING AT SPECIFIED RPM, IN PARK.
4. ADJUST CARBURETOR IDLE SPEED SCREW TO SPECIFIED RPM, IN DRIVE.
5. ADJUST CARBURETOR FAST IDLE SPEED SCREW TO SPECIFIED RPM ON LOW STEP OF CAM, IN PARK.
6. ON AIR CONDITIONED CARS — AFTER COMPLETING ABOVE ADJUSTMENTS, DISCONNECT ELECTRICAL CONNECTOR AT A/C COMPRESSOR CLUTCH. TURN A/C SWITCH ON AND ADJUST SOLENOID (ENERGIZED) SCREW TO SPECIFIED RPM, IN DRIVE. TURN ENGINE OFF. RECONNECT ELECTRICAL CONNECTOR.
7. RECONNECT VACUUM HOSES TO PORTS Ⓗ, Ⓚ AND Ⓑ ON CARBURETOR.
8. INSTALL AIR CLEANER AND RECONNECT MOLDED CONNECTOR TO TVS SWITCH.

CATALYST-E.G.R.-A.I.R.

LOW ALTITUDE CERTIFICATION

TIMING (DEG. BTDC @ RPM)		20° @ 1100 (IN PARK)
SPARK PLUGS	GAP	.060 IN.
	TYPE	AC R46SZ
CARBURETOR SCREW (RPM)		500 (IN DRIVE)
FAST IDLE SCREW (RPM)		1000 (IN PARK)
SOLENOID SCREW (RPM)		600 (IN DRIVE)
CHOKE SETTING		2 N.R.

IDLE MIXTURE SCREWS ARE PRESET AND SEALED AT FACTORY. PROVISION FOR ADJUSTMENT DURING TUNE-UP IS NOT PROVIDED. FOR MAJOR REPAIR, ADJUSTING MIXTURE SETTING BY OTHER THAN APPROVED SERVICE MANUAL PROCEDURE MAY VIOLATE FEDERAL AND/OR CALIFORNIA OR OTHER STATE LAWS.

SEE SERVICE MANUAL AND MAINTENANCE SCHEDULE II FOR ADDITIONAL INFORMATION.

EMISSION HOSE ROUTING

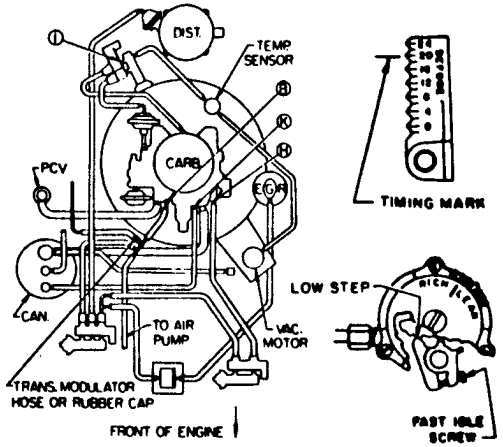

THIS VEHICLE CONFORMS TO U.S. EPA AND CALIFORNIA REGULATIONS APPLICABLE TO 1979 MODEL YEAR NEW PASSENGER CARS.

PRINTED IN U.S.A. PART NO. 22500541

E.O. A-6-144 S.D. Sheet 5
Eng. Fam. 930M4AU

Issued:
082178.