Medium and Heavy-Duty Battery Electric Vehicles

Technology Assessment

September 2, 2014
Sacramento, California

California Environmental Protection Agency
Air Resources Board

Outline

- Technology Overview
- Vehicle Charging
- Optimal Duty Cycles and Applications
- Technology Advancement and Commercialization
- Next Steps and Conclusions
- Contacts

Technology Overview

- Chargers, Inverters, Rectifiers Converters, Batteries, Motors, Auxiliaries

Technology Overview

- Benefits of battery electric trucks
  - Reduced exposure to criteria pollutants
  - Less fatiguing operations for driver
  - Reduced O+M costs for vehicles
  - Reduction in emission of GHGs
- Great advancements in last decade
  - Electric buses in deployment phase
  - Electric delivery vehicles are finding their niche
  - HD electric vehicles are now being demonstrated

Battery Electric Vehicle Components

- All the vehicle power requirements met with on-board energy storage system

- Components:
  - Vehicle chargers
  - Inverters, rectifiers and converters
  - Energy storage systems (including batteries)
  - Electric motors
  - Vehicle auxiliaries

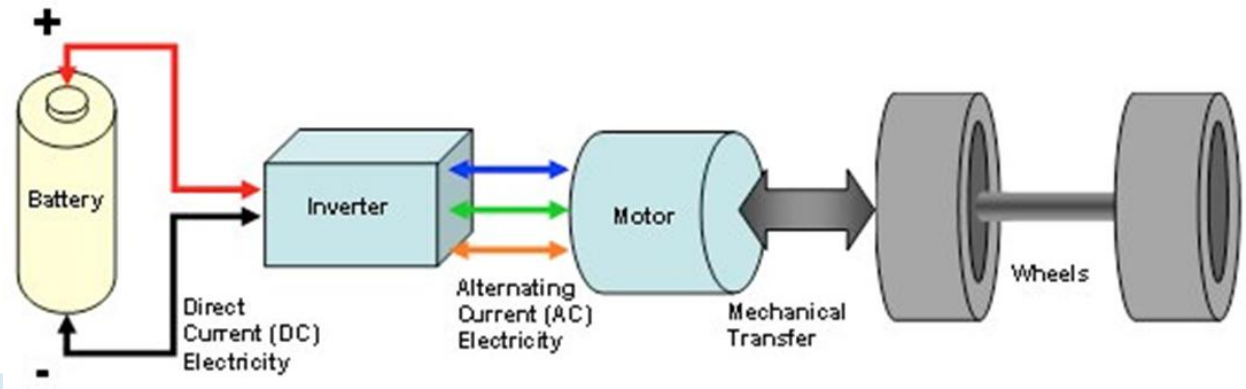

Chargers

- Charging systems
  - AC chargers
    - Level 1: Household 120V; 15A
    - Level 2: 240V; 30A
    - Higher level AC chargers are theoretically capable
      - J1772 plug has is designed maximum of 80A
  - DC fast chargers
    - 500 V; 125A
    - Tesla technology patent open sourced
- On-board chargers
  - Allow for more ubiquities access to fast charging
  - No current HDV standard

* None in service

Inverters Rectifiers and Converters

- Role of inverters and rectifiers
  - AC to DC and DC to AC conversions
- Role of converter
  - DC to DC voltage conversion
    - DC energy from traction motors to correct voltage for vehicle axillaries
  - Typical Vehicle 12 volt DC system
    - Vehicles may maintain 12 volt lead acid battery system

Energy Storage System

- Battery Management Systems (BMS)
  - Manage battery charging
  - Voltage Control
  - Cell Balancing
  - Track battery performance and health
- Battery considerations for vehicle applications
  - Energy to weight ratio
  - Energy to volume ratio
  - Power to weight ratio
  - Battery lifetime
  - Charging time
  - Temperature management

Battery Considerations

- Battery characteristics to consider
  - Safety of battery in specific applications
  - Considerations for battery chemistries
    - High power density
    - High energy density
- Battery degradation/Useful Life
  - % capacity reduction due to usage
    - Based on number of discharge/charge cycles
    - Factors affecting battery life
  - Reusability and recyclability

Battery Chemistries

- Currently available and in use
  - Nickel-Metal Hydride (NiMH)
  - Molten Sodium (ZEBRA)
  - Li-ion
- Future prospects
  - Lithium Sulfur
  - Lithium-Air
  - Flow Batteries

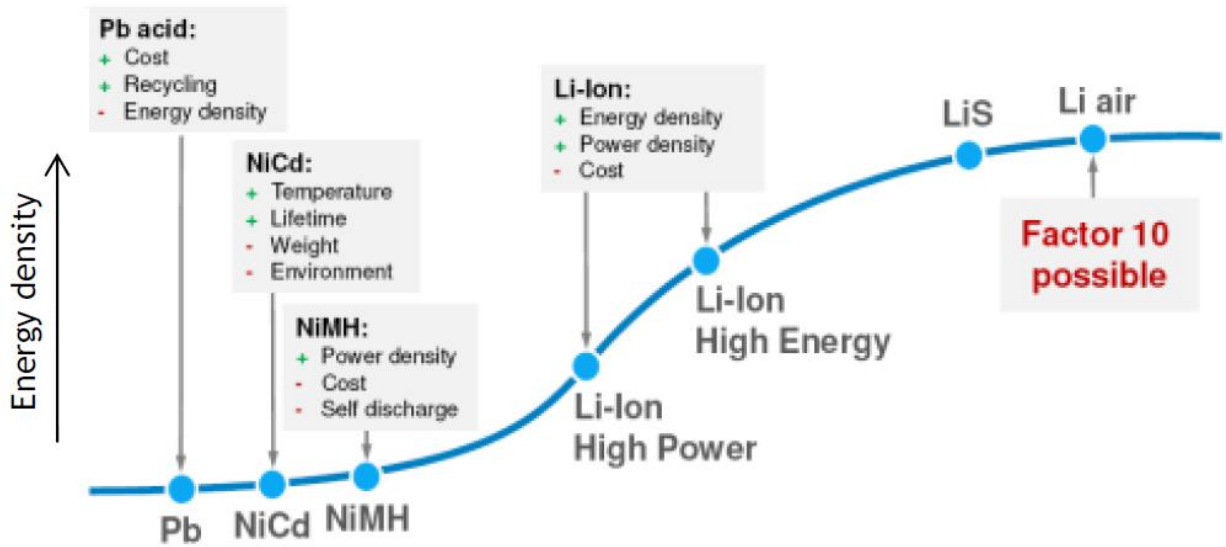

Nickel Metal Hydride

- NiMH
  - Features
    - Specific Energy: 70 Wh/kg
    - Low cell voltage: 1.2V
      - Low specific energy
    - Long cycle and storage life
    - Low toxicity, safe
  - Not favorable for medium- and heavy- duty applications
    - Large amount of cells required due to low energy density
      - Dramatically increases weight of vehicle

ZEBRA Batteries

- Molten Salt Batteries
  - Features
    - Specific energy: 90-120 Wh/kg
    - Cycles: 3000 at 80% DOD
    - Requires heat for usage: requires insulated case
    - Limited power density
  - Suitable for HDV application because:
    - Appropriate energy density
    - Demonstrated in use for MDV and HDV applications
  - Being considered for rail operations

Li-ion Batteries

- Currently the battery of choice for BEVs
- Based on Li-ions shuttling between electrodes
  - Variations in chemistries
- Three basic components
  - Anode (-)
  - Cathode (+)
  - Electrolyte

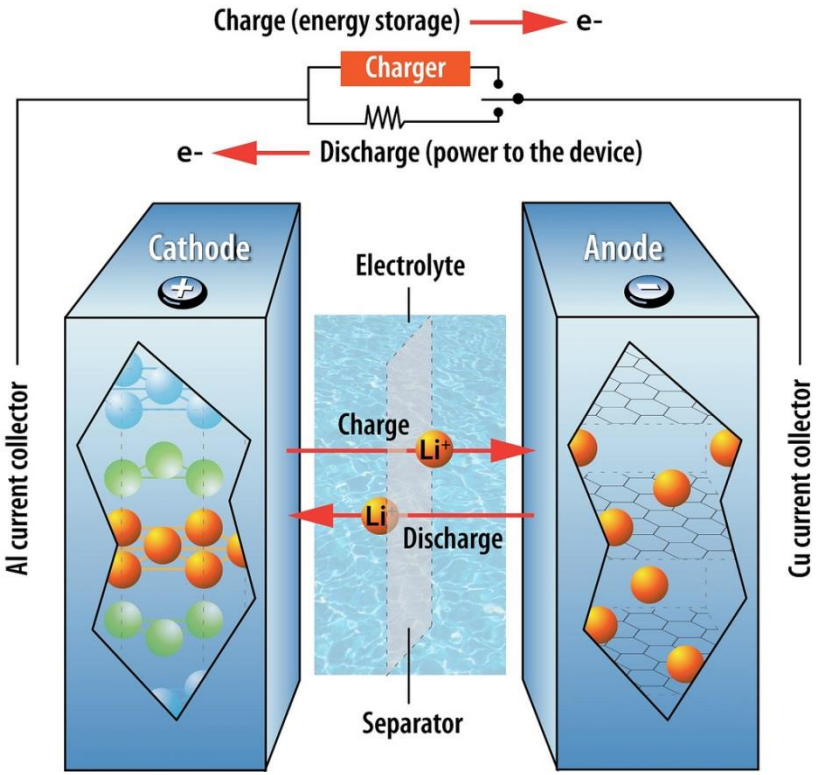

Material Examples		
Anode (-)	Cathode (+)	Electrolyte
Graphite	Li Iron Phosphate	Liquid Organic Solvents
Lithium Titanate	Li Cobalt Oxide	Gels
Hard Carbon	Li Nickel Cobalt Aluminum	Polymers
Tin/Cobalt Alloy	Li Manganese Oxide (spinel)	Ionic Liquids

Common Lithium-Ion Batteries for MDV and HDV

Chemistry	Wh/Kg	Positives	Negatives
NCA (Nickel/Cobalt/Alum)	160	Energy Density and Power	Safety Cost Life Expectancy Range of Charge
LMO (Li Manganese Oxide)	150	Cost Safety Power	Life Expectancy Usable Energy
NMC (Ni Manganese Cobalt)	150	Energy Density Range of Charge	Safety Cost
LFP (Li Fe PO_4)	140	Safety Life Expectancy Range of Charge Cost	Low Temp Performance

Deutsche Bank 2009

Electric Motors

- Electric Motors
  - Important Properties
    - Motor Cost
    - Power Output: (kw or hp)
    - Efficiency
  - Majority of plug-in electric vehicles (PEV) utilize rare-earth permanent magnet motors
    - High power density, specific power, efficiency, and constant power-to-speed ratio
  - AC motors vs DC motors

AC Motor	DC Motor
Single-Speed Transmission Capable	Multispeed Transmission Required
Light Weight	Heavier for Equivalent Power
Less Costly	Higher Cost
95% Efficiency at Full Load	85-95% Efficiency at Full Load
Expensive Controllers	Simple and Less Expensive Controllers

Auxiliaries

- Electrification of auxiliaries in BEVs
  - Represent up to 9% of the energy used in a conventional truck.
    - Typical belt driven auxiliaries need to be electrified
      - HVAC
      - Power steering
  - Electrification of hydraulic pump system
    - Need for increased efficiency compared to conventional vehicles
      - Fifth wheel lift
      - Kneeling bus
      - Wheel chair lift

Vehicle Charging

- Locations, Types, Challenges

Vehicle Charging

- Charger Location:
  - Home or Yard Charging
    - Facilitate charging overnight at lower rates
    - Allow fast charging
    - Facilitate V2G
  - Roadway Charging
    - Dynamic and semi-dynamic
  - Opportunity Charging
    - Can reduce size of battery therefore reduce incremental cost of vehicle
    - Require defined routes due to limited availability of infrastructure

Vehicle Charging

- Conductive Chargers
  - Physical contact between vehicle and grid
    - Connector plugs
    - Contact plates
    - Dynamic technologies
      - Allow for on the go charging

  - Light-Duty Standard for Connector
    - SAE J1772
      - Level 1 and 2 charging only

Vehicle Charging

- Dynamic Electric Vehicle Charging
  - Embedded roadway conduit to supply power for vehicle locomotion
  - Catenary system for delivering power to vehicle
    - Siemens eHighway system

Vehicle Charging

- Inductive Charging
  - A primary coil in the base station installed in roadway or yard to allow for wireless charging
  - Air between road and vehicle coils
  - Ease of use

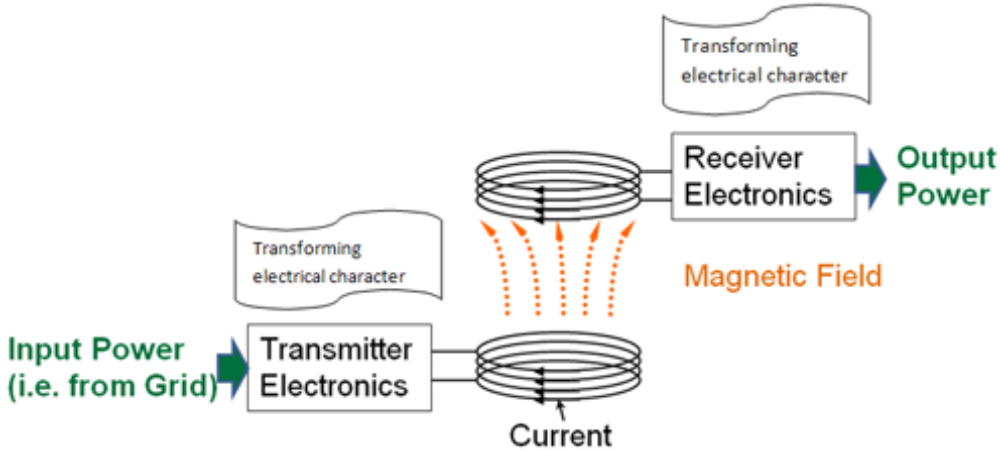

Vehicle Charging

- Semi-Dynamic Conductive Chargers
  - Roadway imbedded vehicle charging
    - Shaped Magnetic Field Resonance
      - Charging while vehicle is underway
    - South Korea: City of Gumi

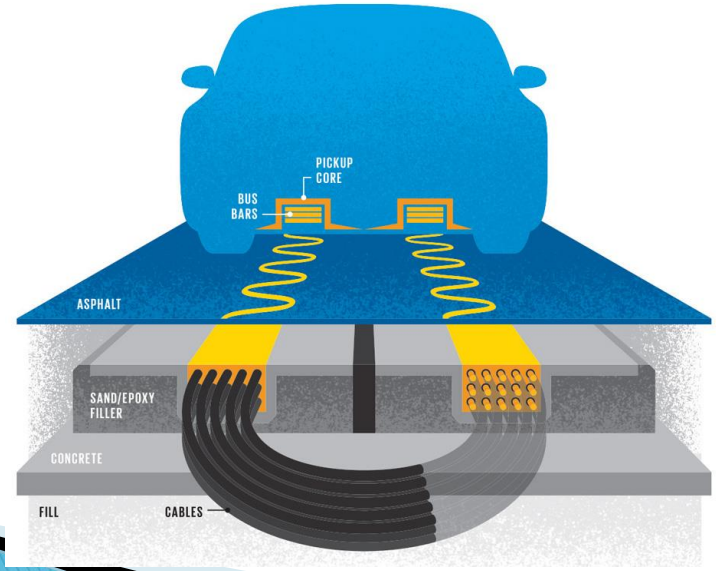

Vehicle Charging

- Vehicle-to-Grid (V2G)
  - Vehicle used as a power source when stationary and connected to grid
  - Supply power back to grid
    - Generate revenue for vehicle owner
      - Grid stability
      - Power back to grid
    - Supply power to building
      - Reduce demand charges
  - Ability to reduce payback period of BEVs
  - Vehicles can provide emergency power when needed

Vehicle Charging

- Considerations on BEV Charging
  - Uniform standard for plugs and technology
    - No HDV standard
    - Timing of charging events is important
- Peak Demand Charges
    - Light rail example of dealing with peak demand charge
- High Infrastructure Costs
  - Consideration of electrical grid capability
    - May encourage off-peak charging for grid load balancing
- Renewable Charging Capability
  - Solar BEV Type-D school bus: Gilroy Unified

Optimal Duty Cycles and Applications

- Near and Long-term

BEV Truck Energy Requirements

- Dependent on energy storage system
  - Energy per mile (Estimates)
    - Medium-Duty: 1.8 kWhr/mile
    - Heavy-Duty: 2.8 kWhr/mile
  - Battery requirements for 100 mile range
    - Medium-Duty: 180 kWhr
    - Heavy-Duty: 280 kWhr
- Battery costs expected to come down
  - Current cost: ~$500-$700/kWhr

Preferred Duty Cycles

- Defined vehicle route
- High start and stop duty cycle
- High idle time
- Duty cycles with lower average speeds
- Optimal vocation duty cycle (near-term): Delivery, Urban Bus and Refuse

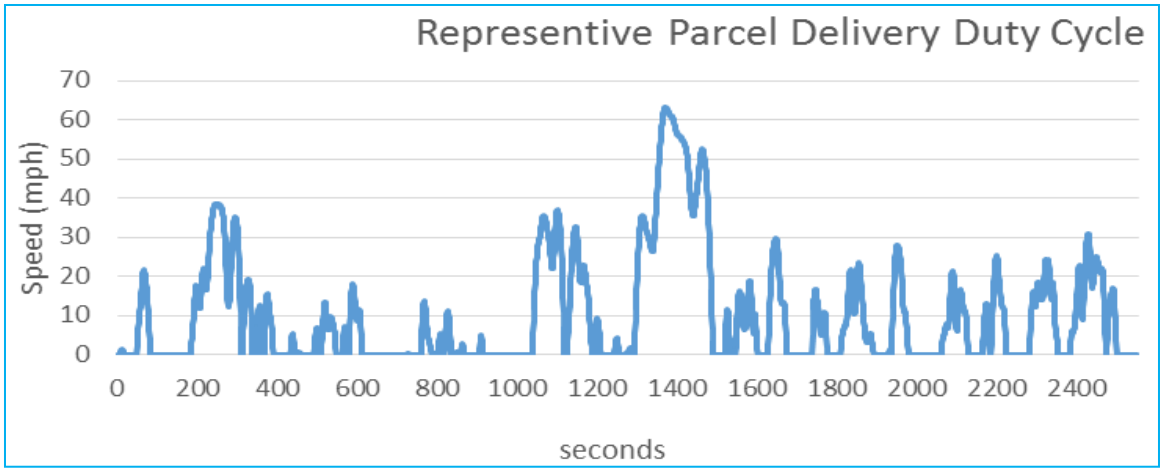

Data Derived from: Walkowicz, K.; Kelly, K.; Duran, A.; Burton, E. (2014). *Fleet DNA Project Data*. National Renewable Energy Laboratory. http://www.nrel.gov/vehicles/fleetdna

Advanced Tech MD/HD Applications Potential Pilot Deployments

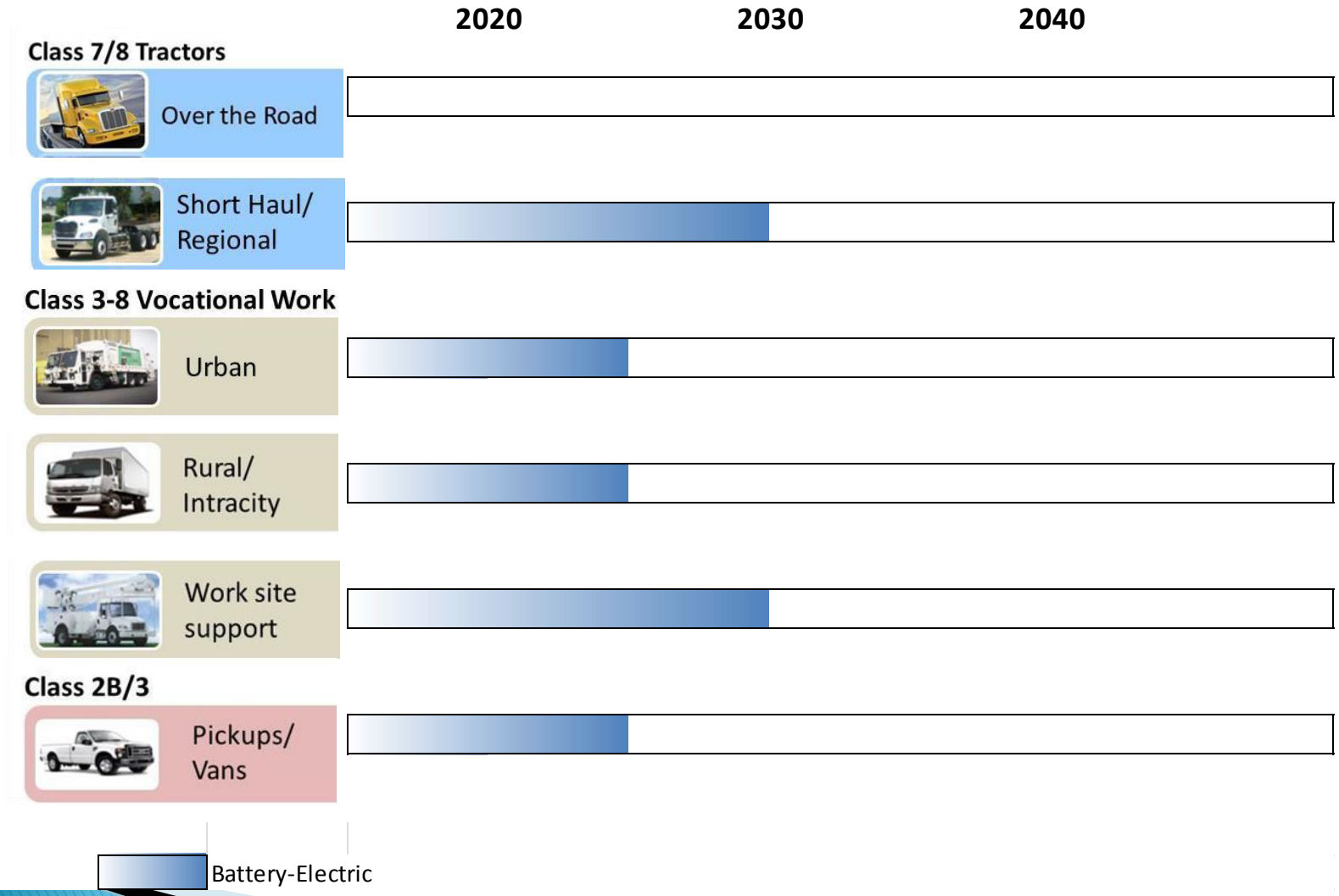

Technology Advancement and Commercialization

- Commercialization Pathway, Market Overview

Commercialization Pathway

Research and Development

↓

Demonstration Phase

↓

Pilot Phase

↓

Deployment Phase

↓

Commercialized/ Widespread Adoption

Commercialization Stages	Production Volume
R&D	NA
Demonstration Phase	1-5
Pilot Phase	5-100+
Deployment Phase	100+
Commercialized/ Widespread Adoption	10,000+ (annually)

Market Overview

- Light-Duty Vehicles
  - Early Commercialization: Limited technology transfer to HDV but significant effect on future battery costs
- Transit Buses
  - Pilot Phase: Illustrating O+M savings
- School Buses
  - Demonstration phase: New CEC project with V2G
- Medium-Duty Vehicles
  - Early Deployment/Pilot Phase: 400 HVIP vouchers so far
- Heavy-Duty Vehicles
  - Demonstration Phase: Hybrid truck market helping lower costs of components and motors

HVIP Funded BEVs

- ARB's HVIP program incentivizes the purchase commercial BEVs

HVIP Vouchers for BEVs (as of 7/14)

Vocation	Class 3	Class 4&5	Class 6	Class 7	Class 8	Total
Parcel Delivery	30	50	101	--	--	**181**
Beverage Delivery	3	--	27	--	--	**30**
Other Truck	1	1	69	--	10	**81**
Food Dist.	1	1	106	--	--	**108**
Buses		4	--	--	10	**14**
Total	**35**	**56**	**303**	**--**	**20**	**414**

Light-Duty

- Over 50,000 light-duty passenger BEVs on CA roads
- ~100,000 Passenger BEVs sold in the nation

Tesla Model S

Nissan Leaf

Make	Weight	Range Miles	Battery Size kW-hr	Motor Size kW
Nissan Leaf	Light Duty	75-100	24	80
Ford Focus e	Light Duty	75	23	107
Tesla Model S	Light Duty	200-300	60 or 85	225-310

- Reduction in battery costs will be driven by light-duty vehicles

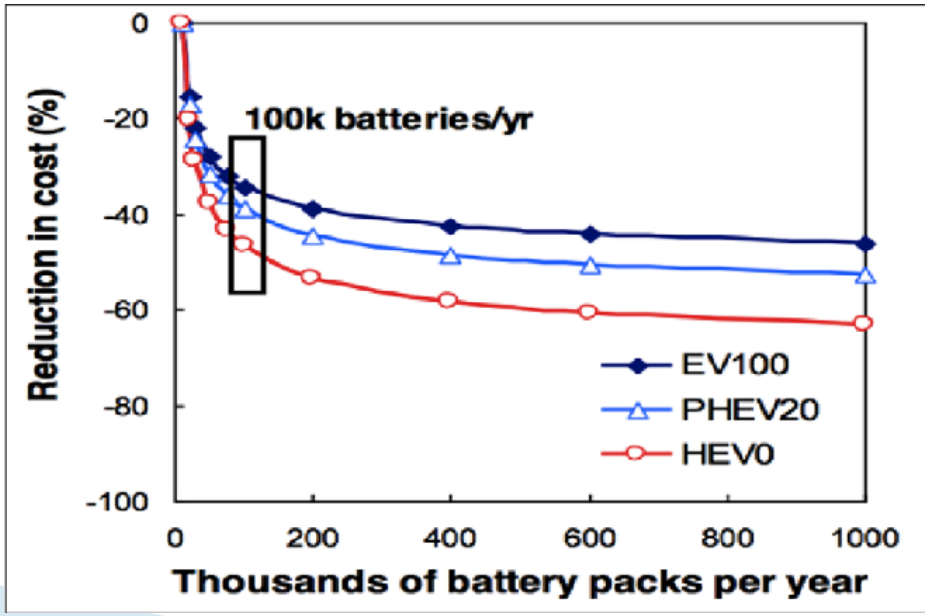

ANL, 2010. Argonne National Laboratory.
D.J.Santini et al, EVS-25, Nov 59 2010.
"Modeling of Manufacturing
Costs of Lithium Ion Batteries for HEVs, PHEVs, and EVs.

Transit Buses

- Optimal Duty Cycle for BEVs
  - Frequent start and stops
  - Low speed operation
  - Defined routes

Proterra

- Two main types of battery all-electric transit buses
  - Fast charge
  - Slow charge

Transit Buses–Fast Charge

- Require a charge time of only minutes
- Example: Proterra BEV transit bus
  - Fast charging on route
    - Under 10 minutes
  - Use overhead charging system–500kw
    - Utilizes wireless bus identification
    - Automatic speed limiting and assisted docking
    - Guide scoop seats charge head into place and connects to charge batteries
  - Small Battery Pack
    - 100 kW–hr pack, Lithium titanate
    - Range of 30–40 miles, fast charging allows for essentially infinite range
  - Drive Motor: 220 kW

Transit Buses–Slow Charge

- Require a charge time of a few hours, typically overnight
- Example: BYD Transit Bus
  - Range is 155 miles on a single charge
  - Charging time of:
    - 5 hours with a 60kW charger
    - 1.6 hours with a 200kW charger
  - Large Battery Pack
    - 324 kW–hr pack, Lithium Iron Phosphate
  - Motor: 90 kW or 180 kW
  - Wall mounted AC charger, output power of $\leq$ 80kW

BYD

Make	Weight	Range Miles	Battery Size kW–hr	Motor Size kW
Proterra	Heavy Duty	30–40	100	220
BYD	Heavy Duty	155	324	90 or 180

Transit Buses–Economics

- High capital cost coming down as production volumes increase
  - Currently ~$800k for battery electric buses
    - incremental cost of $400k compared to diesel
  - Charging infrastructure
- Low operating costs
  - 70% fuel/energy cost savings
- Low maintenance costs
  - No engine, oil changes
  - Motor has fewer moving parts
  - Less repairs/replacements with regenerative braking

Transit Buses–Economics

- Expect future capital costs to decline as production volumes increase
- Primary battery electric component incremental costs estimated to decrease 70% by 2030:
  - battery pack (324 kWh),
  - motor (180 kW)

Estimated Incremental Battery Electric Component Costs over Time

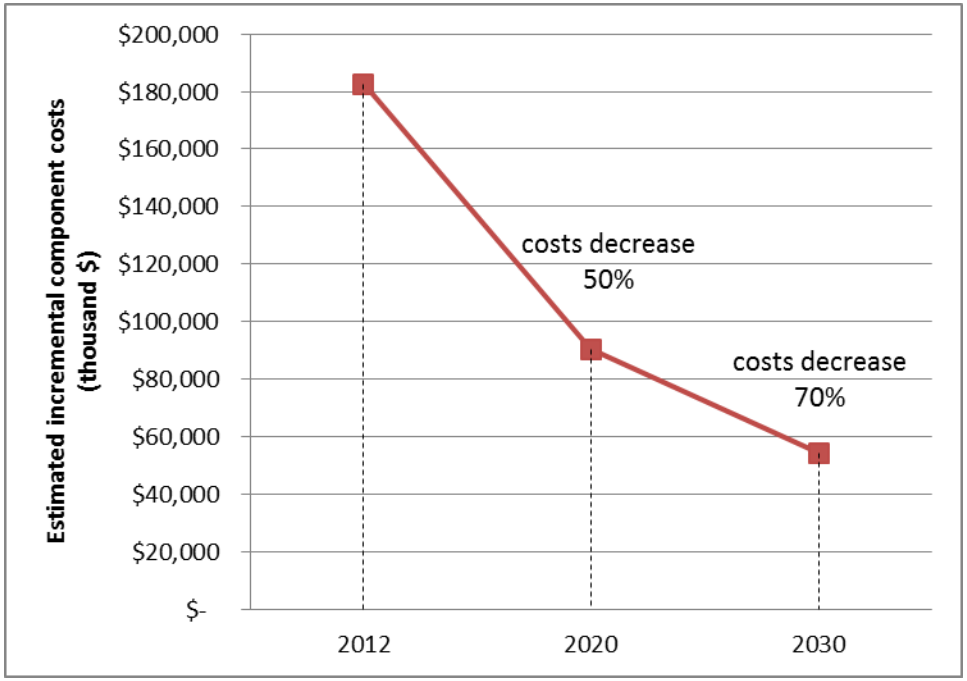

Source: CALSTART, *I710 Project Zero Emission Truck Commercialization Study Draft Report*

School Buses

- Set duty cycles
- Limited usage during the day
  - Opportunity charging during day
    - Vehicle to Grid (V2G) being demonstrated
- Reduce children's exposure
- Cost savings for school districts
- Demonstrations
  - ARB funded
    - TransTech/Motiv Type A School Buses
    - TransPower Type D School Buses

Make	Class	Range Miles	Battery Size kW-hr	Motor Size kW
Transpower School Bus	Type D (Heavy-duty)	50-75	108	100
TransTech/Motiv School Bus	Type A (Medium-Duty)	60-80	84	150

Medium-Duty

- Transfers technology from light-duty passenger BEVs to heavy-duty battery electric trucks
- Used in applications typically requiring less power (lower payload) and range
  - Applications suitable for BEVs
    - Parcel delivery
    - Food distribution
- Incremental cost ~$60-80K
- Payback from 3-5 years*

Make	Weight	Range Miles	Battery Size kW-hr	Motor Size kW
Boulder FB-1000	Medium Duty	80-100	105 or 120	120
EVI Walk-In	Medium Duty	Up to 90	99	120
EVI Parcel Delivery Van	Medium Duty	Up to 90	99	120

* U.S. EPA WCC

Heavy-Duty

- Vocations for heavy-duty BEVs could be expanded via battery developments and lowered vehicle component costs
  - Greater battery energy density and shorter charge times would increase vehicle applicability
  - Reducing battery pack weight would increase cargo capacity of BEV trucks
  - Reducing cost would make BEVs more attractive to fleet purchasers
- Potential for significant emission reductions and fuel savings
- Demonstration of technology in HD applications has potential to drive advancement

Heavy-Duty Demonstrations

- Transpower Class-8 electric drayage truck
  - 75-100 mile range 300 kW AC motor
  - 215 kW-hr LFP battery
    - 7000 pound energy storage system

- Motiv 60,000 lbs refuse hauler
  - City of Chicago, one in revenue service-order for 20 over 5 years
  - Up to 60 mile range, 280 kW motor
  - 210 kW-hr Sodium Nickel battery

Make	Weight	Range Miles	Battery Size kW-hr	Motor Size kW
Transpower-(Drayage)	Heavy Duty	75	215	300
Motiv-(Refuse)	Heavy Duty	60	210	280

Summary of Vehicle Specs

Make	Weight	Range Miles	Battery Size kW-hr	Motor Size kW
Nissan Leaf	LD	75-100	24	80
Ford Focus e	LD	75	23	107
Tesla Model S	LD	200-300	60 or 85	225-310
Motiv School Bus	MD	60-80	84	150
Boulder FB-1000	MD	80-100	105 or 120	120
EVI Walk-In	MD	Up to 90	99	120
Proterra	HD		100	220
BYD	HD	155	324	90 or 180
Transpower School Bus	HD	50-75	108	100
Electric Drayage	HD	75	215	300

Conclusions

- Next Steps, and Conclusions

Next Steps

- Move forward with HHD BEV Demonstrations
  - Demonstrate viability of technology in different applications and weight classes
    - ARB zero-emission drayage demonstration
  - Better understand economics for fleet owners
  - Provide confidence to fleet owners on ROI
  - Demonstrate mechanisms to reduce payback period (V2G)
- Continue to incentivize adoption of battery electric trucks
  - HVIP, AQIP HD Pilots, air district plus ups
- Opportunities for innovative financing approaches to reduce barriers to acceptance

Conclusions

- Heavy-duty BEVs best for applications with defined route (range 30-100 miles), lots of starts/stops and idle, and low speeds
  - Currently well-suited to urban and worksite support vehicles, especially delivery and refuse trucks, urban and school buses
- Light-duty BEV developments transfer to heavy-duty
- Applicability of heavy-duty BEVs could be expanded via battery developments, charging infrastructure expansion, and lowered vehicle component costs
- Demonstrations underway

Team Contacts

- BEV Tech Assessment Team:
  - Kim Heroy-Rogalski: Manager Truck Tech Assessment
    - kheroyro@arb.ca.gov 916.327.2200
  - Earl Landberg: BEV Team Lead
    - elandber@arb.ca.gov 916.323.1384
  - BEV Team Members
    - Marijke Bekken
    - John Gruszecki P.E.
    - Lynsay Carmichael
    - Patrick Chen

- Submit comments by Oct. 1 to: http://www.arb.ca.gov/msprog/tech/comments.htm