Wrap-Up
Truck Technology Assessment

September 2, 2014
Sacramento, California

California Environmental Protection Agency
Air Resources Board

Outline

- Recap: Today's Highlights & Conclusions
- Overall Truck Tech Assessment: Take-home Messages & Overarching Themes
  - What to do to further improve new combustion engines/vehicles
  - How to incorporate advanced technologies

Truck Technology Categories

- Powertrain Optimization
- Vehicle efficiency

- In-Use Emissions

- Combustion Engines:
  - Diesel engines
  - Natural gas engines

- Advanced Technology:
  - Hybrid
  - Battery electric vehicles (EV)
  - Fuel cell EVs

- Transport Refrigeration
  (to be discussed tomorrow)

Engine/Powerplant and Drivetrain Optimization & Vehicle /Trailer Efficiency

- Making Trucks More Efficient, Reducing CO2 Emissions

National Academy of Sciences Estimated Potential GHG/Fuel Consumption Reduction (FCR) per Vehicle from Applying Engine/Vehicle Technologies

Category	Phase 1 Technology Reductions from 2010 baseline	Potential from 2010 baseline (based on NAS*)	Difference
HD Tractor-Trailer (Class 7-8)	Up to 23%	48%	25%
HD Vocational (Class 3-8)	6-9%	19-33%	13-24%
HD Pick-ups and vans (Class 2b)	12-17%	32%	15-20%

* Does not include Hybrid or Electric (covered in Hybrid Technology Assessment category); represents potential reductions by 2015-2020

Key Technologies Evaluated

DIESEL ENGINE/NATURAL GAS TECHNOLOGIES

1. Advanced Transmissions/Engine Downspeeding
2. Advanced Combustion Cycles
3. Waste Heat Recovery
4. Engine Downsizing
5. Stop-Start
6. Automatic Neutral Idle
7. Combustion and Fuel Injection Optimization
8. Higher-Efficiency Aftertreatment
9. Reduced Friction and Auxiliary Load Reduction
10. Air Handling Improvements
11. Variable Valve Actuation/ Cylinder De-activation

VEHICLE EFFICIENCY TECHNOLOGIES

1. Aerodynamics
2. Lightweighting
3. Low-Rolling Resistance Tires
4. Automatic Tire Inflation System
5. Vehicle Speed Limiters
6. Predictive Cruise Control
7. Axle Efficiency
8. Idle Reduction
9. Improved Air Conditioning System

GASOLINE ENGINE TECHNOLOGIES (Class 2b and 3)

1. Lean Burn Gas Direct injection (GDI)
2. Stoichiometric GDI

Powertrain/Vehicle Efficiency Conclusions

- Phase 1 GHG standards dramatically reduced GHG from heavy duty trucks
  - Phasing in now thru 2017
  - 6-23% CO2 reduction
- Potential for even greater reductions
  - Additional 13-25% CO2 reduction possible
- Many promising technologies
  - Waste Heat Recovery, Aerodynamics, Advanced Transmissions/Downspeeding, Stop-Start, Automatic Neutral Idle, Advanced Combustion Cycles, Innovative Efficiency Approaches
- Best technology depends on class of truck
- System integration necessary to achieve combined CO2/NOx reductions

In-Use Emissions

- Ensuring Standards Are Met Throughout a New Vehicle's Life

Truck In-Use Emissions

- Much progress made reducing in-use emissions:
  - New engine standards 30x lower than two decades ago
  - Consent decree , not to exceed standards addressed off-cycle NOx
  - Heavy-duty on-board diagnostics (OBD) have become much more sophisticated
- There are indications more can be done:
  - In-use testing
  - High parts warranty claims – Injectors, EGR, electronics, engine, NOx sensor
  - Warranty and durability testing mileage much lower than useful life of engine
  - NOx emissions during low-temperature, low-load operation a concern

ARB Examining Approaches to Reduce In-Use Emissions

- Increasing warranty periods
- Improving durability testing requirements
- Expanding Not to Exceed (NTE) Requirements
- Conducting In-Use Compliance Testing
- Expanding Inspection and Maintenance Requirements

Heavy-Duty Truck Combustion Engines

- Diesel and Natural Gas

Evolution of Heavy-Duty Engine Standards and Technology

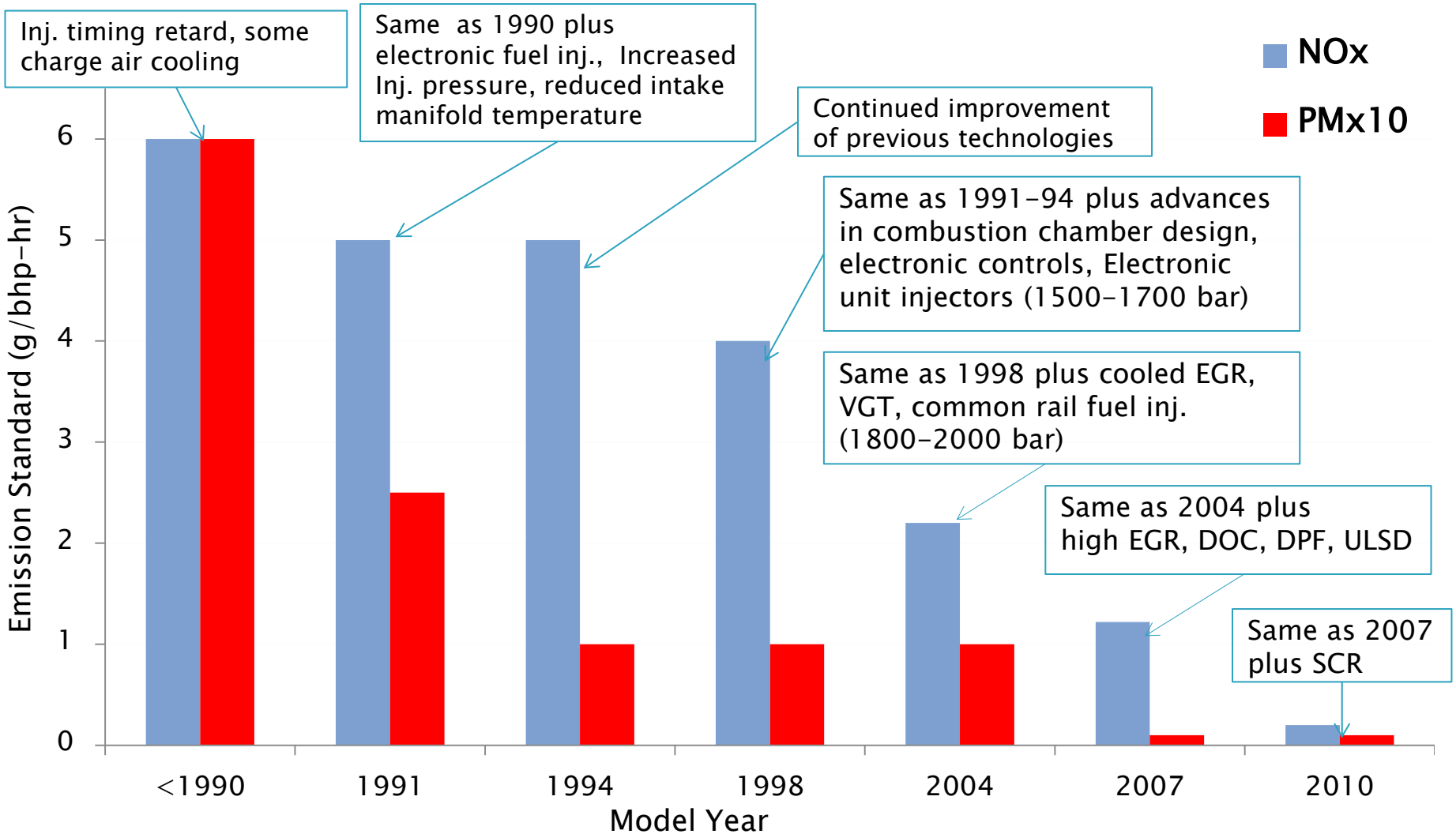

Diesel Technologies Evaluated

- Exhaust thermal management
  - Turbocharger control
  - Increased idle speed
  - In-cylinder post-injection
  - Intake throttling
  - More EGR
- Aftertreatment system
  - New SCR catalyst formulations
  - Close coupling
  - NOx storage catalysts
  - Alternatives to urea
  - Urea/ammonia (NH3) gas dosing
  - Exhaust system heat retention
  - Supplemental Heat

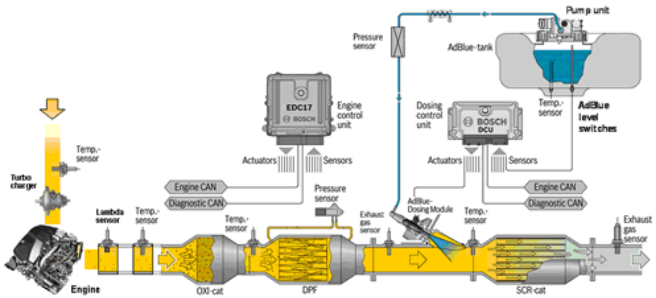

Diesel Engine Conclusions

- Even with advanced technologies (hybrid, battery, fuel cell), combustion engines will continue to play major role
- Diesel engines are significantly cleaner than they were in the past decade
  - Additional reductions needed to meet air quality and GHG goals
- ARB funding research to demonstrate feasibility of low-NOx
- Technology developments are promising
  - Further engine refinement and improvement in exhaust aftertreatment and control
  - Integrating OBD, improved sensors with lower NOx engines
- Need to both reduce new engine standards and address in-use emissions to ensure standards achieved in real world
  - Systems integration necessary to achieve maximum NOx and GHG reductions

Natural Gas Technologies Evaluated

- Advanced Engine Control Technologies
  - Port Fuel Injection
  - Advanced Air to Fuel Ratio Control
  - Cooled EGR
  - Dedicated EGR
  - Faster Light-off
- Advanced Aftertreatment Technologies
  - Advanced TWC
  - Close-coupled Light-off
  - Ammonia Slip Catalyst

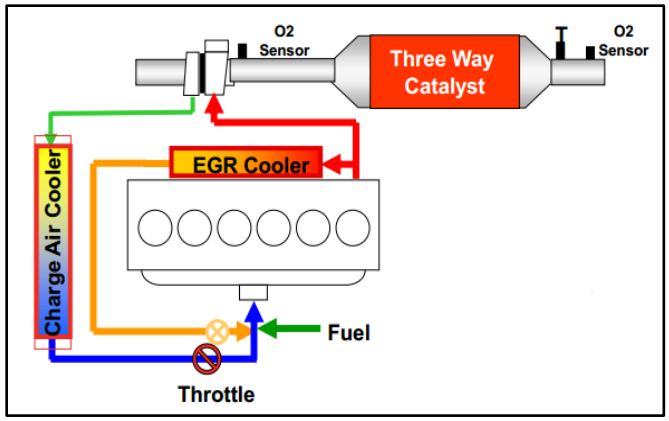

Natural Gas Engine Conclusions

- Natural gas engines can achieve very low NOx
  - Optimistic natural gas engines can eventually meet a 0.02 g/bhp-hr standard
- Concerns re: vehicle cost, refueling infrastructure, and methane emissions still impact the adoption of natural gas engines
- Research in progress to demonstrate lower NOx natural gas engines/trucks
- Other alternative fuels, such as E85 and DME, could also reduce GHG emissions while keeping criteria emissions low

Heavy-Duty Truck Advanced Technologies

- Hybrids, Battery EVs, Fuel Cell EVs

Much Progress in Last Decades

- Many hybrid, battery electric and fuel cell electric vehicles on road
  - Many funded in part by State of California
  - Many demonstrations ongoing
- Over 1,800 heavy duty hybrid vehicles in CA
- ~1,000 medium heavy-duty BEV trucks in the nation
  - Over 400 BEV trucks in CA, mostly Class 6
- Over 320 fuel cell electric buses deployed worldwide since 1991
- Getting better, cheaper, being introduced to additional applications
- Looking forward to wider scale adoption, further improvements to these technologies

Advanced Tech MD/HD Applications Potential Pilot Deployments

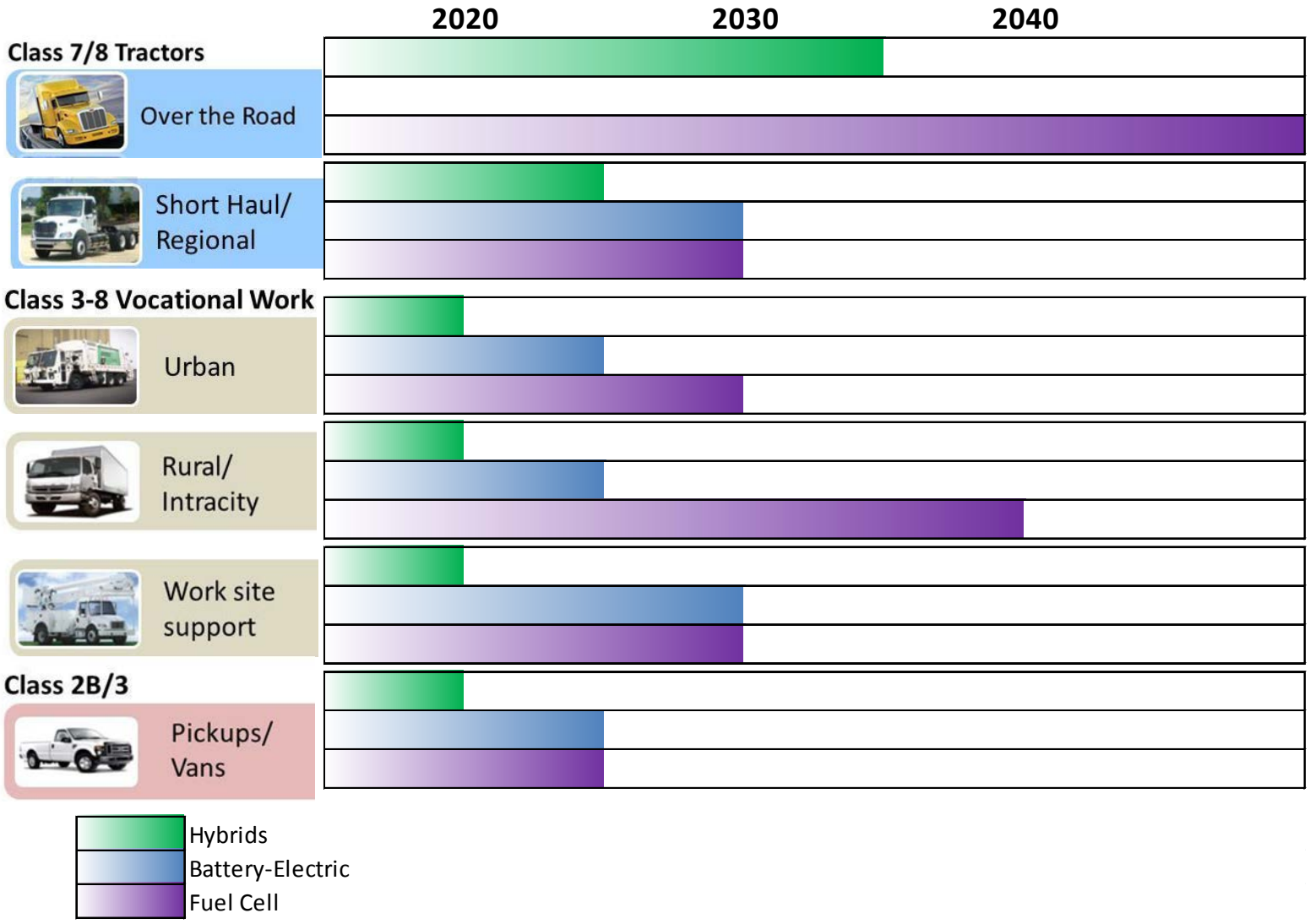

Hybrid Trucks

- Thousands on road in California
  - Stop-and-go duty cycles, high idle time = best payback
- $20,000 – $60,000 incremental cost
- Less than 5 year payback in some applications, incentives needed for most
- ~5 year or less payback for:
  - refuse haulers, mild hybrid in Class 8 tractor trailer
  - Class 3-6 straight box truck
- Other applications have longer payback
  - Incentives and/or requirements would help

Hybrid – Need for Vertical Integration

- Emissions need to be carefully scrutinized
- GHG Emissions (e.g., CO_2)
  - Generally positive benefits: reduced CO_2
  - Fuel economy improvement – cycle dependent
- Criteria Pollutant Emissions (e.g., NO_x)
  - Potentially negative impacts: increased NO_x
    - Engine operating at non-optimum torque map
    - Lower exhaust temperatures – affect SCR performance
    - Potential interference with engine's ECU/ECM
  - Emissions impacts – cycle dependent

Hybrid Conclusions

- Many types of hybrids
- Ideal vocations for hybrids are highly transient, high-power demand, high idling time
  - Package delivery, refuse haulers, urban transit bus
- Hybrids improve fuel economy
  - 10-20% for mild, up to 70% for full
  - Payback currently > 5 years for many vocations
- Hybrids reduce CO_2 but can increase NO_x
  - Need to improve system integration, certification requirements to prevent NO_x increases
  - Series hybrid able to mitigate the NO_x impact
- Hybrid technologies have cobenefits for other zero-emission technologies (fuel cell and BEV)

Battery Electric Trucks

- Battery technologies
- Battery charging technologies
- Battery electric vehicle demos to date
- Range/applicability for vocations
- Key next steps for development and deployment

BEV Conclusions

- Heavy-duty BEVs best for applications with defined route (30-100 miles), lots of starts/stops and idle, and low speeds
  - Currently well-suited to urban and worksite support vehicles, especially delivery and refuse trucks, urban and school buses
- Light-duty BEV developments transfer to heavy-duty
- Applicability of heavy-duty BEVs could be expanded via battery developments, charging infrastructure expansion, and lowered vehicle component costs
- Demonstrations underway

Fuel Cell Electric Trucks

Drayage Trucks

- Fuel cell technology
- Fuel cell demos to date
- Potential vocational applications
- Hydrogen production and vehicle fueling infrastructure
- Key next steps for development and deployment

Transit Buses

Shuttle Buses

Delivery Vans

Fuel Cell Conclusions

- Fuel cells show potential in many applications
  - Zero tailpipe emissions with potential for deep carbon reductions
  - Quiet operation with full range and performance
- Early commercialization in cars, forklifts, stationary generators
- Early pilots in transit buses
- Demonstrations in off-road and truck applications

Truck Take-home Messages: New Truck Engines & Vehicles

- New truck engines can be lower-emitting for NOx and GHGs
  - Systems integration is important, often requires multiple companies to work together
  - Improving current criteria new engine standards would help
    - Warranty, durability, certification, Not to Exceed
  - Improving checks on in-use emissions is also key
    - Heavy-duty I/M, smoke inspection, OBD
  - New, lower new-engine standards for NOx will eventually be feasible – research, demo's underway

- Vehicles
  - Large additional improvements in fuel consumption possible (13-25% reductions beyond current standards)

Truck Take-home Messages: Advanced Technologies

- Much progress made, especially in high idle, frequent stop, shorter range applications
  - Progress in fueling infrastructure, lower cost will expand applications
- Many hybrid, zero-emission demonstrations ongoing
- Systems integration, attention to hybrid NOx emissions important
- In mid to long term, advanced technologies will be much more broadly applicable
- Incentive monies, in-use rules can spur markets

Contacts

- Overall Truck Sector Lead: Kim Heroy-Rogalski
  kheroyro@arb.ca.gov, (916) 327-2200
- Diesel and Natural Gas Engine Lead: Daniel Hawelti
  dhawelti@arb.ca.gov, (626) 450-6149
- Engine/Powerplant & Drivetrain Optimization Lead: Alex Santos
  asantos@arb.ca.gov, (626) 575-6682
- Vehicle/Trailer Efficiency Lead: Jason Hill-Falkenthal
  jason.hill-falkenthal@arb.ca.gov, (626) 350-6746
- Hybrid Truck Lead: Robert Nguyen
  rnguyen@arb.ca.gov, (916) 327-2939
- Battery Electric Vehicle Lead: Earl Landberg
  elandber@arb.ca.gov , (916) 323-1384
- Fuel Cell Electric Vehicle Lead: Roxana Bekemohammadi
  rbekemoh@arb.ca.gov, (916) 323-2803

- Submit comments by Oct. 1 to:
  http://www.arb.ca.gov/msprog/tech/comments.htm