California Environmental Protection Agency

AIR RESOURCES BOARD

DRAFT

TECHNOLOGY ASSESSMENT:

HEAVY-DUTY HYBRID VEHICLES

November 2015

State of California
AIR RESOURCES BOARD

This report has been prepared by the staff of the Air Resources Board. Publication does not signify that the contents reflect the views and policies of the Air Resources Board, nor does mention of trade names or commercial products constitute endorsement or recommendation for use.

TABLE OF CONTENTS

Content Page

Executive Summary ES-1
I. Introduction and Purpose of Assessment I-1
II. Overview of the Current Status of Hybrid Technologies II-1
A. Background II-1
B. Hybrid Performance Characteristics II-1
C. Most Advantageous Hybrid Applications and Duty Cycles II-2
III. Assessment of Heavy-Duty Hybrid Technologies III-1
A. Heavy-Duty Hybrid Industry Structure III-1
B. Current Heavy-Duty Hybrid Vehicle Availability III-3
C. Degree of Hybridization III-7
D. Hybrid Architectures III-8
E. Hybrid Categories III-16
IV. Performance Metrics IV-1
A. Fuel Economy IV-1
B. Emissions IV-1
C. Operational Factors IV-5
D. Improvement Targets IV-10
V. Cost V-1
A. Overview V-1
B. Analysis V-1
VI. Certification VI-1
A. Overview of Hybrid Vehicle Certification Requirements VI-1
B. Warranty and Useful Life Requirements VI-1
VII. Conclusions VII-1
VIII. References VIII-1
Appendix A: Financial Incentives Programs A-1
Appendix B: Testing and Certification Issues B-1

TABLE OF CONTENTS (Cont.)

Contents Page

Tables

Table ES- 1: Summary of Hybrid Deployments and Technology Readiness..... ES-4
Table III- 1: Heavy-Duty Engine, Chassis and Hybrid Drive Manufacturers.....III-2
Table III- 2: HVIP Vouchers Issued by Hybrid Vehicle Type as of April 2015..... III-5
Table III- 3: Heavy-Duty Hybrid Vehicle Availability and CalHEAT Heavy-Duty Truck Classification III-6
Table III- 4: Noise Reduction Due to ePTO III-19
Table III- 5: Current Medium- and Heavy-Duty PHEV Examples III-20
Table IV- 1: General Range of Fuel Economy Improvement……..IV-1
Table IV- 2: Heavy-Duty Hybrid Electric Vehicle Technological Improvement Potential IV-11
Table IV- 3: Technology Goals for Heavy-Duty Hybrid Electric Vehicles.....IV-11
Table IV- 4: Heavy-Duty Hydraulic Hybrid Vehicle Technological Improvement Potential IV-12
Table IV- 5: Technology Goals for Heavy-Duty Hydraulic Hybrid Vehicles IV-12
Table V- 1: Comparison of Heavy-Duty Vehicle and Light –Duty Vehicle Market Characteristics…….....V-3
Table V- 2: Commercialization Stages and Production Volume V-4
Table V- 3: Hybrid Trucks—Payback Period Cost Analysis (Future 2015-2020 Technology) V-9
Table VI- 1: Heavy-Duty Diesel Engines Intended Service Class and Useful Life Requirements……...VI-2
Table B- 1: Heavy-Duty Diesel Engines Intended Service Class and Useful Life Requirements.....B-12

TABLE OF CONTENTS (Cont.)

Contents Page

Figures

Figure ES- 1: Vocational Heavy-Duty Hybrid Vehicles ES-5
Figure III- 1: California Share of Heavy-Duty Hybrid Truck and Bus Population (2015)*……..III-4
Figure III- 2: Vocational Heavy-Duty Hybrid Vehicles..... III-6
Figure III- 3: Schematic of Parallel Hybrid Electric System III-10
Figure III- 4: Schematic of Series Hybrid Electric System III-11
Figure III- 5: Microturbine Construction III-13
Figure III- 6: Microturbine PHEV Series Drivetrain III-13
Figure III- 7: Capstone Microturbine Demonstration Projects..... III-14
Figure III- 8: Schematic of Series-Parallel Hybrid Electric System III-16
Figure III- 9: Schematic of Series Hydraulic Hybrid System III-17
Figure III- 10: PHEV Work Site Support Trucks III-19
Figure III- 11: Catenary-Powered Hybrid Demonstration Trucks..... III-21
Figure IV- 1: Engine-Out NOx Emissions and Engine Operation……...IV-4
Figure IV- 2: Acceleration Test, 0 – 60 mph, of Class 8 Beverage Delivery Hybrid and Conventional Trucks.....IV-7
Figure IV- 3: Conventional Maintenance Cost per Mile IV-9
Figure IV- 4: Hybrid Maintenance Cost per Mile.....IV-9
Figure V- 1: Forecasts for Battery Costs [1][2][3]……V-2
Figure V- 2: Direct Manufacturing Cost Learning Curve.....V-6
Figure V- 3: Factors Affecting Fleet's Purchasing Decision.....V-7
Figure B- 1: Powerpack Hybrid Test Method Options.....B-8
Figure B- 2: GEM Input GUI B-10
Figure B- 3: VECTO Data Input.....B-11

ACRONYMS AND ABBREVIATIONS

ARB	California Air Resources Board
BAAQMD	Bay Area Air Quality Management District
CalCAP	California Capital Access Program
CalHEAT	California Hybrid, Efficient, and Advanced Truck
CCR	California Code of Regulation
CHV	Catenary-Powered Hybrid Vehicle
CI	Compression-Ignition
CPCFA	California Pollution Control Financing Authority
CMP	Carl Moyer Memorial Air Quality Standards Attainment Program
CNG	Compressed Natural Gas
CO2	Carbon Dioxide
DERA	Diesel Emissions Reduction Act
DOT	Department of Transportation
EMD	Engine Manufacturer Diagnostic
EPA	Environmental Protection Agency
ePTO	Electric Power Take-Off
EVI	Electric Vehicle International
FEL	Family Emission Limit
GEM	Greenhouse Gas Emissions Model
GHG	Greenhouse Gas
GRPE	Working Party on Pollution and Energy
GUI	Graphical User Interface
GVWR	Gross Vehicle Weight Rating
HEV	Hybrid Electric Vehicle
HHV	Hydraulic Hybrid Vehicle
hp	Horsepower
HVIP	Hybrid and Zero-Emission Truck and Bus Voucher Incentives Project
ICE	Internal Combustion Engine
lbs.	Pound
MIL	Malfunction Indicator Light
mph	Miles per Hour
MY	Model Year
NAVC	Northeast Advanced Vehicle Consortium
NHTSA	National Highway Traffic Safety Administration
NOx	Oxides of Nitrogen
NPRM	Notice of Proposed Rulemaking

NREL	National Renewable Energy Laboratory
NY	New York
NYCDOT	New York City Department of Transportation
NYSDOT	New York State Department of Transportation
NYSERDA	New York State Energy Research and Development Authority
NYT-VIP	New York Truck Voucher Incentive Program
OBD	On-Board Diagnostics
OEM	Original Equipment Manufacturer
PHEV	Plug-in Hybrid Electric Vehicle
PM	Particulate Matter
PTO	Power Take Off
RESS	Rechargeable Energy Storage System
RTD	Regional Transit District
SAE	Society of Automotive Engineers
SCAQMD	South Coast Air Quality Management District
SCR	Selective Catalytic Reduction
SFMTA	San Francisco Municipal Transportation Agency
SI	Spark-Ignited
SIP	State Implementation Plan
SJVAPCD	San Joaquin Valley Air Pollution Control District
SMAQMD	Sacramento Metropolitan Air Quality Management District
SOC	State of Charge
UNECE	United Nations Economic Commission for Europe
U.S.	United States
VECTO	Vehicle Energy Consumption Calculation Tool
VIF	Vehicle Voucher Incentive Fund
VIP	Voucher Incentive Program
VTA	Valley Transportation Authority

Executive Summary

The Air Resources Board's (ARB) long-term objective is to transform the on- and off-road mobile source fleet into one utilizing zero and near-zero emission technologies to meet air quality and climate change goals. This assessment is intended to provide a comprehensive assessment of the current state and projected development over the next 5 to 10 years for heavy-duty hybrid vehicle technologies. Hybrid technologies are currently available commercially, or as demonstration projects, for a wide range of heavy-duty vehicle classes, covering vocations ranging from pickups and delivery vans, to parcel and package delivery step-in vans, to transit buses and refuse haulers.

Hybrid technologies have shown great potential in reducing fuel consumption and greenhouse gas (GHG) emissions from heavy-duty vehicles. The magnitude of benefits is highly dependent on the duty cycles and the type of hybrid technologies. The higher incremental costs of hybrid vehicles remain the most significant challenge in their more widespread adoption, although possible savings from operational and maintenance costs are helping to offset the initial purchase costs. Heavy-duty hybrid vehicles can assist with reducing fuel consumption and GHG emissions now, and advancements in hybrid technologies will provide synergistic benefits for battery electric and fuel-cell heavy-duty vehicle technologies.

Presented below is an overview of the Hybrid Technology Assessment that describes the potential for emission reductions, market penetration of hybrids in medium-duty and heavy duty trucks and buses and what the next steps are for hybrids in the on-road heavy-duty arena. For simplicity, the discussion below is in a question-and-answer format and is only an overview of the topics that are evaluated in more detail in the body of the document.

1. What are heavy-duty hybrid vehicles?

Heavy-duty vehicles are defined to be vehicles with gross vehicle weight rating (GVWR) of 8,500 pounds or greater. Hybrid vehicles have two distinct power sources, a combustion engine and an alternative motive power source: either electric or hydraulic motor(s). The combustion engine can be coupled with the alternative power source to both provide tractive power to move the vehicle as in a parallel hybrid system. The combustion engine can also be designed to act as a generator to provide electrical energy to the electric motor, which in turn provides the sole tractive power to move the vehicle as in a series hybrid system.

Heavy-duty hybrid vehicles can be designed with various degrees of hybridization, ranging from very minimal to very extensive integration of hybrid components into the

vehicle. This range reflects a spectrum of electrification. The degree of hybridization is generally grouped into three broad categories from least reliance on alternative power source to most: micro hybrids, mild hybrids and full hybrids.

Hybrid systems are available in three architectures: parallel hybrid, series hybrid and, series-parallel hybrid. Each design has its own advantages and limitations and can be designed to ideally serve specific vocational and duty-cycle applications. These hybrid architectures share some common elements, listed below:

- A drivetrain, typically involving an internal combustion engine and electric or hydraulic motor(s), that can recover and reuse energy in addition to the main engine;
- An energy storage system (e.g., batteries, hydraulic accumulators, flywheels, ultra-capacitors);
- Control electronics; and
- Regenerative braking.

The main difference among these hybrid designs is the relative size of drive train components, energy storage system, and the level of interaction of the motive power source(s) with the drive wheels.

2. For what medium- and heavy-duty on-road applications are hybrid vehicles currently available?

Heavy-duty hybrid vehicles are currently available in various vehicle platforms, fuel types and hybrid architectures, with about 2,500 hybrid trucks and buses on the road today in California.

Both hybrid electric and hydraulic hybrid heavy-duty vehicles are available, with hybrid electric the most prevalent; however, hydraulic hybrid technology is rapidly developing and is proving itself in select vocations. Hybrid electric vehicles use batteries as the rechargeable energy storage system and hydraulic hybrid vehicles use high-pressure fluid as the renewable energy storage system.

Hybrid vehicles are available in class 2b and 3 (commercial pickups and vans) mainly as gasoline hybrid electric conversions, although other fuels are also available. Hybrid vehicles are also available for the larger vehicle CalHEAT[1] work truck categories (class

[1] The California Hybrid, Efficient and Advanced Truck (CalHEAT) Research Center, sponsored by the California Energy Commission, is a California-based resource for research, development, demonstration and commercialization of advanced, efficient truck technologies and systems. The CalHEAT Research Center has established categories of trucks which group trucks based on similar uses to allow for the identification of vehicles that have drive cycles that are compatible with new technologies based on range, duty cycle and function.

3 to 8) such as urban work trucks including package and linen delivery, transit and shuttle buses, refuse haulers, and beverage and food delivery (see section III.B of this hybrid technology assessment report for more detailed discussions on hybrid vehicle availability.) In fact, over half the total heavy-duty hybrids on the road in California today are parcel delivery or beverage delivery trucks. These larger vehicles typically have a diesel engine as the combustion power source coupled with either a hybrid electric or hydraulic hybrid system. Generally, for these heavier hybrid vehicles, a parallel system architecture, in which both the internal combustion engine and the electric motor are used to provide tractive power, is used in longer distance, higher speed applications. A series system architecture, in which only the electric motor is used to provide tractive power and which can provide all-electric operation/miles, is used in more transient, stop-and-go duty cycles. Some plug-in hybrid electric vehicles are also available in small volumes for the smaller vehicle classes, as well as utility work trucks. A summary of hybrid deployments and technology readiness level for several of the vehicle categories is in Table ES-1. Figure ES-1 shows some examples of commercially available heavy-duty hybrid vehicles for various vocations.

Table ES- 1: Summary of Hybrid Deployments and Technology Readiness

Vehicle Type	Technology Readiness	Number in Service	Notes
Parcel Delivery (8,501 to 14,000 pounds (lbs.) GVWR)	Commercially Available	830 Funded by HVIP	FedEx, UPS Ideal duty cycle for hybrids
Uniform & Linen Delivery (8,501 to 14,000 lbs. GVWR)	Commercially Available	110 Funded by HVIP	Drive cycle is also well suited for hybrids
Beverage Delivery (> 14,000 lbs. GVWR)	Commercially Available	440 Funded by HVIP	Mostly funded in the earlier phases of HVIP
Food Distribution & Other Trucks	Commercially Available	680 Funded by HVIP	Primarily delivery vehicles and shuttles
Buses (Transit, Shuttle, School)	Commercially Available	20 UB Funded by HVIP, 410 UB funded through other incentive programs	Smaller number of school buses and shuttle buses funded by HVIP
Other Trucks	Demonstration Phase	Utility/Bucket Trucks, Drayage	Plug-in hybrids

Figure ES- 1: Vocational Heavy-Duty Hybrid Vehicles

Parcel Delivery

Hino Class 5 delivery/ local delivery food distribution hybrid box truck

Class 5 step van local delivery

Beverage Delivery

Class 7/8 day cab bulk transport, and day cab and straight-truck side-loader local delivery

Class 7/8 day cab bulk transport, straight-truck and class 5 step van local delivery

Food Distribution

Transit

3. Where are medium- and heavy-duty hybrid vehicles being deployed?

Medium- and heavy-duty hybrid vehicles are currently available worldwide and are projected to increase to about 90,000 vehicles by 2022, with about 85 percent of those vehicles deployed in China, North America and Europe (Automotive Fleet, 2015). Hybrid transit buses are projected to have a market share of 9.7 percent of the global transit bus market by 2020 (Frost & Sullivan, 2013). The U.S. currently has about 12,000 medium- and heavy-duty hybrid vehicles, with about 2,500 vehicles in California (U.S. EIA, 2015).

4. What additional applications are promising for the next 5-10 years?

Staff anticipates that the heavier classes of vehicles that are engaging in Class 3 to 8 rural/intracity and regional delivery, including drayage trucks can be the next group of vehicles that will be hybridized in greater number. Staff also anticipates that plug-in hybrids will see increased deployment in utility/bucket truck applications, with increased use of electric power take-offs (ePTO). Heavy-duty hybrid vehicles will also likely expand into more energy- and power-intensive duty cycle applications such as refuse haulers. In addition, the over-the-road line haul truck sector may see increased number of mild hybrid systems being deployed as efficiency standards tighten.

5. What designs of hybrid vehicles are most promising?

Each type of hybrid architecture has its strengths, and selecting the most appropriate hybrid design for each duty cycle is important. As discussed above, parallel hybrids are more efficient at high speed, cruising conditions since the combustion engine can be optimized for operation at these conditions for improved fuel economy, while series hybrids are more efficient in stop-and-go drive cycles since the hybrid system can be optimized to handle transient loads. Staff anticipates that the following are the most promising technologies in the next 5 to 10 years:

- Series electric and hydraulic hybrids for stop-and-go applications, e.g., refuse haulers, package delivery vans, shuttle buses, and transit buses;
- Series hybrid electric, with microturbines as range extenders, for regional delivery applications;
- Advanced parallel hybrids, and series-parallel hybrids, with optimized integration of the engine with the hybrid system/components and emissions after-treatment system for longer distance, more energy intensive applications, such as regional delivery applications with extended periods of high-speed freeway operations; and
- Plug-in hybrid electric vehicles in utility work truck and drayage truck applications.

6. **What factors limit the applicability of hybrids to medium- and heavy-duty on-road applications?**

There are three main factors that are currently limiting more widespread deployment of hybrid vehicles into medium- and heavy-duty on-road applications: (1) cost, (2) performance, and (3) weight. (Certification challenges are discussed below as well.)

Cost is probably the most crucial aspect of these three factors since it directly affects a fleet's capital outlay and profitability. The incremental costs of hybrids can be partially or wholly mitigated through incentives programs and in fact, staff is not aware of any heavy-duty hybrid vehicles in California that were purchased without some type of financial assistance from incentive programs. However, to accelerate the development and deployment of significantly greater number of hybrids, costs need to come down for hybrids to allow for a more significant footprint in the medium- and heavy-duty on-road sectors.

Performance is the next factor that needs additional improvement, particularly for high-energy demand duty cycles. Hybrids' performance currently is well suited for stop-and-go, transient duty cycles that allow more energy to be recaptured through regenerative braking, in addition to reducing the amount of time the combustion engine has to operate at less optimum points, thereby improving fuel economy. For high-power demand on-road applications, hybrids need to improve their acceleration performance and ability to ascend steep grades.

Weight is another factor that needs attention since it affects a vehicle's performance, fuel economy as well as its cargo carrying capacity. For the smaller classes of vehicles, the weight penalty can be as much as 300 pounds and up, but, for heavier vehicles, the weight penalty can be more substantial, upward of 4,500 pounds. For weight-sensitive vocations, the additional weight from a hybrid system can potentially have a negative impact on the vehicle’s performance compared to a comparable conventional vehicle.

7. **How do heavy duty hybrid costs differ from costs for conventional vehicles?**

The costs for heavy-duty hybrid vehicles are currently higher than comparable conventional vehicles. The incremental difference in cost can range from about $8,000 to $10,000 (about 20 to 25 percent of vehicle purchase cost) for the lighter-class (class 2b) vehicles to about $200,000 (about 40 to 50 percent of vehicle purchase cost, assuming $525,000 as the cost for a baseline natural transit bus and $400,000 for a baseline diesel transit bus) for a heavier class-8 transit bus. There are two main reasons for the higher cost of hybrid vehicles: components and production volume. Hybrid vehicles cost more simply because they have additional components that are not required in conventional vehicles, such as motors/pumps (electric, hydraulic), rechargeable energy storage devices (batteries, ultra-capacitors, and hydraulic

accumulators), electronics (controllers, inverters), additional mechanical components and coupling devices.

The other reason for the higher costs of hybrids is due to the low production volume for heavy-duty hybrid vehicles. Achieving economies of scale over that volume is extremely difficult when spread out across different manufacturers and the various platforms that have to be designed to meet specific operational requirements of a particular vocation. For example, a hybrid drivetrain that was designed for a transit bus cannot be simply installed in a refuse hauler, even though these vocations both have similar stop-and-go duty cycles. The level of vehicle differentiation is even more pronounced when considering vehicles that operate in different duty cycles. The myriads of vehicle platforms and performance requirements impact the ability to obtain cost reduction through economies of scale for heavy-duty hybrid vehicles. To obtain needed manufacturing cost reductions, heavy-duty hybrid manufacturing processes need to be improved with increased modular designs for basic components that could be transferred from one vehicle platform to another, which can be fine-tuned and tailored to meet the performance requirements of a particular vehicle platform.

ARB understands the important role of financial incentives in spurring the development of hybrid technologies and more widespread deployment of vocational heavy-duty hybrid vehicles. To reduce the incremental costs of hybrid vehicles for early adopters, ARB has been providing financial incentives through programs such as California's Hybrid and Zero-Emission Truck and Bus Voucher Incentives Project (HVIP) and Carl Moyer Program. Through these and other incentive programs, about 2,500 heavy-duty hybrid vehicles have been deployed in California. These incentive programs act to both increase the number of hybrid vehicle deployments, through reductions in incremental costs, as well as to encourage the development of more advanced and efficient hybrid systems through varying levels of incentives, with more monies available for hybrid vehicles that have been certified and/or that provide zero emission range.

8. What are the GHG and criteria pollutant benefits of heavy-duty hybrids?

Hybrid technologies reduce fuel consumption from heavy-duty vehicles significantly. Fuel economy improvements for heavy-duty hybrid vehicles have been reported to range from about 10 percent to 50-70 percent, depending on the level of hybridization, hybrid architecture and duty cycles.

Although fuel economy improvement and GHG emissions reductions have been well demonstrated for heavy-duty hybrid vehicles, oxides of nitrogen (NOx) emissions reduction benefits are less clear, especially for heavy-duty hybrid diesel vehicles. If the hybrid system is well designed and integrated, coupled with judicious placement in the vocations with appropriately matched duty cycles, NOx emissions from a heavy-duty hybrid vehicle can be lower compared to a comparable conventional vehicle. However, if the hybrid system was not properly matched for a specific vocation, combined with

insufficient integration to the vehicle's engine and emissions after-treatment systems, hybrid vehicles can have higher NOx emissions compared to conventional vehicles. This points to the difficulty of making a generalized statement concerning NOx emissions of a heavy-duty hybrid vehicle since the NOx emissions characteristics of a heavy-duty hybrid vehicle are dependent on a number of parameters, all of which must be considered when comparing NOx emissions from a hybrid vehicle to a conventional vehicle. The complex interplays between a hybrid system, the engine, emissions after-treatment devices/dosing strategy, and duty-cycles need to be evaluated in a fully integrated approach in order to more fully understand the nature of NOx emissions from heavy-duty hybrid vehicles.

9. **What certification challenges to wider use of heavy-duty hybrid trucks exist?**

Heavy-duty hybrid vehicles are currently not required to be certified for criteria emissions compliance, although the engines that are used in these vehicles have to be certified, and as discussed further below, the vehicles must be certified for on-board diagnostics (OBD) compliance and must meet warranty requirements.

ARB has in place voluntary interim certification procedures for heavy-duty hybrid vehicles, which were approved in 2002, and subsequently amended in 2013. Heavy-duty hybrid vehicle manufacturers are not required to use the interim certification procedures to sell their hybrid vehicles in California. However, the interim certification procedures are available to certify hybrid vehicles to qualify for additional financial incentives through programs such as ARB's HVIP. Since 2009, nine heavy-duty hybrid vehicles were voluntarily certified using the interim procedures adopted in 2002; however, no heavy-duty hybrid vehicle has yet been certified using ARB's amended procedures.

In addition to the requirements discussed above, ARB requires heavy-duty hybrid vehicles to be certified for OBD compliance. Currently, only one heavy-duty hybrid manufacturer, Hino, has obtained OBD certification for their heavy-duty hybrid engines. Allison Transmissions and BAE Systems have recently obtained OBD certification for their hybrid system.

Warranty requirements call for the proper functioning and performance of emission-related components over the warranty period (5 years or 100,000 miles for heavy-duty engines). For hybrid vehicles, warranty requirements can be complicated by the fact that for hybrid vehicles, there is typically more than one entity responsible for parts of the power train (e.g., one for the diesel engine and one for the hybrid system). Thus far, ARB has addressed this concern through the use of a Dual Executive Order process, where each certifying party is required to submit their own data and is held liable for their own system.

ARB is working towards a mandatory certification program for heavy-duty hybrid vehicles by participating in the Phase 2 federal GHG standards rulemaking effort with the U.S. Environmental Protection Agency (EPA). As part of this effort, ARB is recommending that U.S. EPA include a mandatory supplemental NOx emissions check for hybrids that mirrors ARB's interim voluntary certification procedures discussed above.

ARB's existing certification and OBD requirements provide a critical and effective mechanism for ensuring a vehicle's expected emission benefits are achieved and maintained. In recognition that ARB's existing certification requirements are geared towards traditional technologies, which may deter some manufacturers from developing promising new technologies, staff is developing the Innovative Technology Regulation, scheduled for consideration by the Board in 2016 (ARB, 2015a). This proposed regulation is intended to work synergistically with ongoing and anticipated State and federal truck and bus technology advancing regulations. ARB staff anticipates the regulation could also increase the number and diversity of promising technologies eligible for funding under ARB's Air Quality Improvement Program, the California Energy Commission's Alternative and Renewable Fuel and Vehicle Technology Program, and other technology-advancing incentive programs.

The Innovative Technology Regulation under development is intended to provide defined, near-term ARB certification and aftermarket part approval flexibility to help facilitate market launch of the next generation of truck and bus technologies. One option being considered by staff would provide tiered ARB certification and OBD requirements for an innovative technology, providing targeted flexibility at market launch and early technology deployment stages, and reverting back to full ARB approval requirements once the technology achieves a market foothold. Specific certification and OBD flexibility provisions should provide manufacturers with a defined, predictable, and practical ARB approval pathway, while preserving ARB's overarching objective to ensure expected emission benefits are achieved in-use.

10. What is being done to increase fleet acceptance of hybrids in medium- and heavy-duty on-road applications?

Heavy-duty vehicles are typically used in business operations, which to stay viable, must remain profitable. Hence the purchasing decision for heavy-duty hybrid vehicles usually involves considerations of costs, especially comparing a hybrid's incremental cost against the expected cost of a similar conventional vehicle. However, many factors are at work to narrow or eliminate this incremental cost. First, advances in hybrid technology and production techniques will lead to greater efficiency and result in lower costs. Second, continuing increase in production volume will lead to greater economy of scale and lower costs. Lastly, incentive programs can provide funding to cover some portion or all of the incremental cost to reduce the payback period of the hybrid vehicles. ARB currently has four heavy-duty vehicle incentive programs (HVIP, Carl Moyer

Memorial Air Quality Standards Attainment Program (CMP), Truck Loan Assistance Program, and Proposition 1B Goods Movement Emission Reduction Program) available statewide, in addition to many local air district truck incentive programs. Other states also have similar truck incentive programs, including New York Truck Voucher Incentive Program (NYT-VIP) and Chicago's Drive Clean Truck – Voucher Program. See Appendix A for more detailed descriptions of these incentive programs.

Other factors limiting widespread deployment of hybrid vehicles, i.e., performance and weight, are being aggressively pursued by manufacturers through research and development, which will lead to more hybrid vehicles meeting the performance requirements of trucking fleets.

Another aspect of wider hybrid acceptance and applicability is through outreach and training efforts to inform fleet operators of the benefits of current heavy-duty hybrid technology. For example, deployment programs should focus on informing fleet operators of the operational and maintenance savings hybrids can provide through reduced fuel consumption and reduced brake wear. Additional outreach would ensure that fleet operators have the necessary data to make informed decisions on performance and duty cycles to achieve both operational requirements and attractive payback periods.

11. What performance and commercialization goals for heavy-duty hybrid trucks does staff recommend?

Despite its significant growth, the technology for heavy-duty hybrid vehicles is still not fully matured. To reach its full potential and more widespread commercial success, heavy-duty hybrid technology must be able to compete on its own merits with conventional heavy-duty vehicle platforms. To get to that point, the heavy-duty hybrid sector must see broad-spectrum advances in terms of individual component efficiency, cost reduction, system design, and vehicle integration. Areas that need further enhancement range from hybrid components, e.g., electric motors, hydraulic pumps and motors, energy storage and conversion devices, to manufacturing process and vehicle integration. The common elements to all these improvement areas are increased efficiency, reliability, reduced weight, and cost. Advancement in these areas will allow hybrid technologies to penetrate into more power- and energy-intensive vocations. Additionally, advances in electric motor and energy storage technologies would assist with the progression toward greater level of electrification and provide synergistic benefits for zero and near-zero heavy-duty vehicle technologies. This is particularly true for the series hybrid architecture where, due to the decoupling of the engine from the drive wheels, the combustion engine could be replaced with a non-combustion power source, such as fuel cell, which would provide a zero-tailpipe emission vehicle.

Achieving these performance and commercialization goals requires sustained efforts by manufacturers in research and development to develop more efficient components and

drivetrains, to optimize production processes and vehicle integration. Governmental entities and other industry stakeholders should assist in these efforts with funding for continued development of advanced technologies as well as continue to provide financial incentives to create and maintain market demand for heavy-duty hybrid vehicles.

I. Introduction and Purpose of Assessment

California Air Resources Board's (ARB) long-term objective is to transform the on- and off-road mobile source fleet into one utilizing zero and near-zero emission technologies to meet air quality and climate change goals. This assessment is intended to provide a comprehensive assessment of the current state and projected development over the next 5 to 10 years for heavy-duty hybrid vehicle technologies. This technology assessment will support ARB planning and regulatory efforts, including:

- California's Sustainable Freight Strategy;
- State Implementation Plan (SIP) development;
- Funding Plans;
- Governor's Zero Emission Vehicle Action Plan; and
- California's coordinated goals for greenhouse gas (GHG) and petroleum use reduction.

This hybrid technology assessment is broken into the following elements:

- Chapter II discusses a brief background and summary of heavy-duty hybrid vehicle characteristics and applications.
- Chapter III discusses who manufactures heavy-duty hybrid vehicles, current hybrid vehicle availability, and the various types and designs of hybrids.
- Chapter IV discusses hybrid vehicle fuel economy, emissions, and operational factors such as performance and reliability.
- Chapter V discusses costs.
- Chapter VI discusses certification issues for heavy-duty hybrid vehicles.
- Chapter VII discusses the assessment's conclusions.

II. Overview of the Current Status of Hybrid Technologies

A. Background

Hybrid vehicles, by definition, have two distinct power sources, a combustion engine and an alternative motive power source: either electric or hydraulic motor(s). The combustion engine can be coupled with the alternative power source to both provide tractive power to move the vehicle as in a parallel hybrid system. The combustion engine can also be designed to act as a generator to provide electrical energy to the electric motor, which in turn provides the sole tractive power to move the vehicle as in a series hybrid system. Hybrid vehicle technology was first developed and commercialized in the light-duty sector back in the early 2000's. After several years of development, medium- and heavy-duty hybrids, while still at low volume production, are now available. The first hybrid vehicle technology developed was hybrid electric which consists of an internal combustion engine (ICE) and an electric motor coupled with a battery system as the vehicle's two propulsion power sources. While hybrid electric technology remains the most widespread hybrid technology, other types are also available or being developed for heavy-duty applications, including hydraulic hybrids in both series and parallel designs and microturbine hybrids in a series design.

B. Hybrid Performance Characteristics

Some general characteristics or features of heavy-duty hybrids are idle-off capability, regenerative braking, power assist and engine downsizing, and electric only drive including extended electric range as seen in plug-in hybrid applications (UCS, 2014). Idle-off capability allows for the engine to turn off when the vehicle is stopped, saving fuel. This feature is also common now in some conventional vehicles (SAE, 2002) that are taking advantage of the added fuel efficiency. Idle-off capability alone does not qualify the vehicle as a hybrid.

Regenerative braking is another characteristic of hybrids that enables the vehicle to capture the kinetic energy that would otherwise be lost as heat during braking (over 70 percent energy recovery for some types of hybrids). This is accomplished through the electric motor which works as a generator converting the kinetic energy into electricity and storing it in the batteries, or an hydraulic pump which converts kinetic energy into high-pressure potential energy in the case of hydraulic hybrids and stores it in accumulators, that later are used in powering the vehicle. Regenerative braking also extends the life of the brakes therefore reducing the operating and maintenance costs of the vehicle. Many fleets are reporting greatly extended brake maintenance intervals, especially in severe-duty, stop-and-go vocations such as refuse haulers and inner-city transit buses, which result in much fewer brake replacements over the hybrid vehicle's

life. Reduced brake wear also contributes to reduction of near-road exposure to brake dust emissions.

The ability of the electric and/or hydraulic motor to assist the engine in providing motive power to the vehicle is referred to as power assist. Vehicles with this feature qualify and are considered to be a “mild” hybrid. When the electric motor is large enough to allow the vehicle to operate solely on electric power the vehicle is considered a “full” hybrid with electric-only drive ability. Plug-in heavy-duty hybrid vehicle applications currently are capable of electric-only range of up to 30 to 40 miles (EDI, 2015).

All the features of a hybrid system result in improved vehicle efficiency and fuel economy (up to 50-70 percent increase) (U.S. EPA, 2015; 21st CTP, 2013) along with improved vehicle environmental performance through the reduction of GHG emissions. The fuel savings and environmental benefits of hybridization are the primary drivers for purchases of heavy-duty hybrids. Additional performance benefits of heavy-duty hybrid vehicle technology are quick acceleration and less engine noise which results in a smoother and quieter ride.

C. Most Advantageous Hybrid Applications and Duty Cycles

The most advantageous duty cycles for heavy-duty hybrids are those with frequent starts and stops, low speeds, and idling. This is because the best performance, emission reductions and cost savings generally occur when the energy storage system is fully utilized. Typically in hybrids, this is achieved at times when the vehicle is idling, moving at lower speeds, or operating in start-and-stop situations. The other important factor for optimal efficiency in hybrid systems is adequate recharge time during the duty cycle. This necessary recharging is typically done through regenerative braking. Therefore, vehicles with heavy urban start-and-stop duty cycles and high idle time such as refuse haulers, transit buses, and package or beverage delivery trucks are best suited for hybridization. Another application where significant benefits for medium-duty hybrid technology can occur are trucks that can utilize an electronic power take-off (ePTO) such as utility and tree trimming services.

For vehicles that are not operated in highly transient duty cycles, like those discussed above, or for fleets that keep their vehicles only for a short time, e.g., less than five years, the potential fuel savings may not be able to fully recoup the higher initial costs of a full hybrid system. In these applications, such as class-8 over-the-road tractor, or vehicles used in regional delivery, a mild hybrid system may provide sufficient fuel savings that, along with a lower incremental cost for such systems, could still make economic sense.

As discussed, hybrid vehicles are most efficient when used in vocations having high degree of transient operations, e.g., stop-and-go, heavy acceleration/deceleration events. As a result, commercially available heavy-duty hybrid vehicles were initially

built for urban pick-up and delivery operations, such as parcel delivery, transit and shuttle buses, refuse haulers. Manufacturers have started integrating hybrid technologies into a broad group of vehicle weight classes and applications from shuttle buses to heavy-duty tractors in low-volume production. Vehicles are available in multiple body and chassis sizes for a range of applications, from Class 2b/3 commercial pickups and vans to Class 4-6 parcel vans through Class 7/8 delivery tractors.

Chapter III presents staff's assessment of potential technologies for heavy-duty hybrid vehicles, including additional details on hybrid vehicle availability (Section III.B).

III. Assessment of Heavy-Duty Hybrid Technologies

Section A below discusses the structure of the heavy-duty hybrid industry; Section B discusses current availability of heavy-duty hybrids; Section C discusses various degrees of hybridization in heavy-duty hybrids; Section D discusses the three main hybrid vehicle architectures (parallel, series, etc.); and Section E covers the various categories of hybrid vehicles such as hybrid-electric and hydraulic.

A. Heavy-Duty Hybrid Industry Structure

This technology assessment examines the status of heavy-duty vehicles ranging from the smaller Class 2b/3 medium-duty vehicles to Class 8 over-the-road line haul trucks. The structure of the on-road heavy-duty diesel vehicle industry is disaggregated, in the sense that the vehicle manufacturers and engine manufacturers are, with only a few exceptions, not the same entities. The structure of heavy-duty hybrid industry is even more disaggregated due to the addition of hybrid component manufacturers, such hybrid drive systems. Table III-1 shows a summary of engine, chassis and hybrid drive manufacturers that manufacture parts of heavy-duty hybrid vehicles.

Table III- 1: Heavy-Duty Engine, Chassis and Hybrid Drive Manufacturers

Engine, Chassis and Hybrid Drive Manufacturer
- Hino

Hybrid Drive Manufacturers
- Allison Transmission
- AltE
- AMP/Workhorse
- BAE Systems
- Bosch-Rexroth
- Crosspoint Kinetics
- Eaton
- Efficient Drivetrains, Inc.
- ISE
- Lightning Hybrids
- Odyne
- Parker Hannifin
- U.S. Hybrid
- VIA
- Voith
- Wrightspeed
- XL Hybrids

Engine Manufacturers
- Capstone
- Caterpillar
- Cummins
- Detroit Diesel
- Mercedes-Benz

Engine and Vehicle Manufacturers
- Ford
- General Motors
- Isuzu
- Mack
- Mitsubishi
- Navistar
- PACCAR
- Volvo

Vehicle Manufacturers
- Autocar LLC
- Blue Bird Corp
- Crane Carrier Co.
- DAF
- Daimler
- DUECO
- Freightliner
- International
- Kenworth
- Peterbilt
- Western Star
- Workhorse Custom Chassis

As can be seen from Table III-1, there are only several instances where the vehicle manufacturers and engine manufacturers are the same entities (Hino, Isuzu, Mack, Mitsubishi, Mack, Navistar, PACCAR, and Volvo) and there is currently only one manufacturer (Hino) that has a presence in all three segments of the heavy-duty hybrid industry. This illustrates the reality of the market situation for heavy-duty hybrid vehicles where Hino is the only manufacturer that currently has a hybrid vehicle that is vertically integrated. Many more heavy-duty hybrid vehicles are also currently available, but they were built by vehicle integrators (e.g., truck body manufacturers) or chassis builders using engines, hybrid components, and chassis sourced from different manufacturers, based on a fleet's specifications. The lack of integration in the heavy-duty hybrid

industry results in lost opportunities where vehicles could be built more efficiently at lower costs and able to comply with emissions and warranty requirements. These issues are explored in more details in Chapter IV, Performance Metrics, and Chapter VI, Testing/Certification Issues.

B. Current Heavy-Duty Hybrid Vehicle Availability

Heavy-duty hybrid vehicles have penetrated into many vocations with significant transient duty cycles, including transit buses, refuse haulers and delivery vehicles with heavy-duty hybrid electric vehicles (HEV) generally being more widely available than hydraulic hybrid vehicles (HHV). Heavy-duty hybrid vehicles are currently powered mainly by diesel and gasoline engines, with diesel engines more predominant in the heavier weight-class vehicles (class 4 to 8) and gasoline engines more common in the lighter weight vehicles, including class 2b and 3 commercial pickups and vans. In addition to diesel and gasoline hybrids, there are also some demonstration projects for alternative fuel hybrid vehicles.

1. Heavy-duty Hybrids Operating In California and Beyond

Medium- and heavy-duty hybrid vehicles are currently available worldwide and are projected to increase to about 90,000 vehicles by 2022, with about 85 percent of those vehicles deployed in China, North America and Europe (Automotive Fleet, 2015). Hybrid transit buses are projected to have a market share of 9.7 percent of the global transit bus market by 2020 (Frost & Sullivan, 2013). In the U.S., there are approximately 12,000 medium- and heavy-duty diesel electric hybrid vehicles (U.S. EIA, 2015).

In California, there are about 2,100 heavy-duty hybrid vehicles that have been partially funded and deployed with financial incentives through the California Hybrid and Zero-Emission Truck and Bus Voucher Incentives Project (HVIP), which is discussed in more detail below and in Chapter V. Other incentive programs have also funded more than 400 hybrid transit buses operating in California. The total number of heavy-duty hybrid trucks and buses operating in California, is about 2,500 vehicles. Staff is not aware of any heavy-duty hybrid vehicles in California that were purchased without some type of financial assistance from incentive programs.

California's heavy-duty hybrids represent just over 20 percent of the estimated total cumulative nationwide heavy-duty hybrid population for 2015, as shown in Figure III-1.

Figure III- 1: California Share of Heavy-Duty Hybrid Truck and Bus Population (2015)*

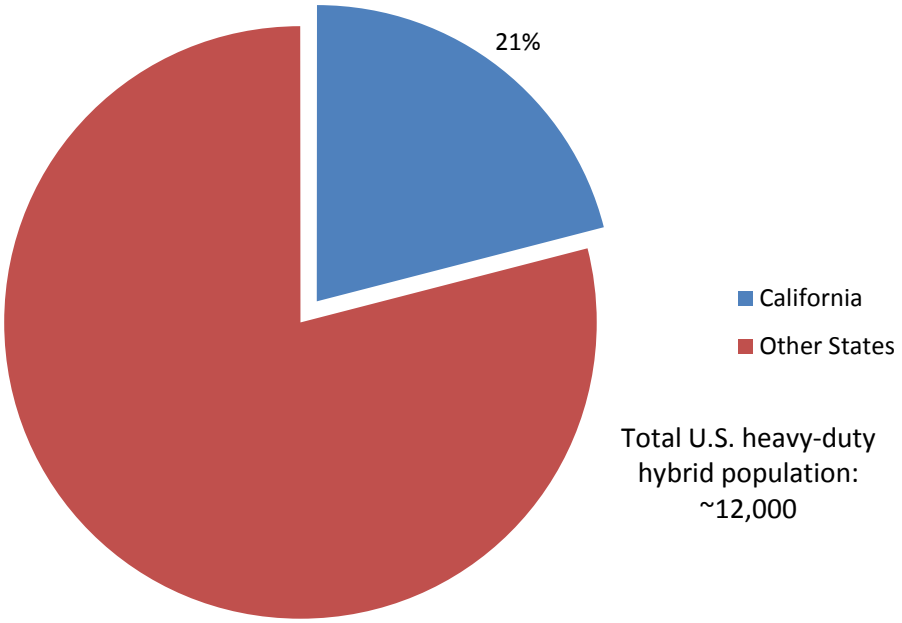

*Includes both diesel electric hybrid and gasoline electric hybrid vehicles. Nationwide heavy-duty diesel hybrid vehicle population for 2014 and 2015 was assumed by ARB staff to remain constant at the 2013 level of 730 heavy-duty diesel electric hybrid trucks and buses, based on data from the U.S. Energy Information Administration (U.S. EIA, 2015).

Examples of California transit agencies that have hybrid buses in their fleet include the following:

- The San Joaquin Regional Transit District (RTD) Stockton area fleet in 2013 was 100 percent diesel-electric hybrid buses.
- San Francisco Municipal Transportation Agency (SFMTA) is operating 112 hybrid electric buses, of which 89 buses are series hybrids from BAE Systems and the remainder having the Allison parallel drive system. SFMTA also recently ordered an additional 62 hybrid buses.
- Santa Clara Valley Transportation Authority (VTA) recently added 38 diesel-electric hybrid buses to its fleet.

2. Heavy-Duty Hybrid Applications

From the first prototype developed for use in FedEx package delivery application in 2004, heavy-duty hybrid vehicle technology has advanced significantly and its use has spread to many vocational applications (Hoyt, 2006). HEVs are currently commercially available (introduced commercially) for many applications, including parcel delivery, beverage delivery, food distribution, uniform and linen delivery, school bus, shuttle bus, transit bus, propane pick-up and delivery, and refuse hauler.

Table III-2 shows the vouchers issued through HVIP for hybrid vehicles. As shown in Table III-2, nearly two thirds of hybrids funded through HVIP, and over half the total heavy-duty hybrids on the road in California today, are parcel delivery or beverage delivery trucks. Table III-3 shows the current availability for various CalHEAT classes of heavy-duty trucks. Figure III-2 shows some examples of commercially available heavy-duty hybrid vehicles for various vocations.

Table III- 2: HVIP Vouchers Issued by Hybrid Vehicle Type as of April 2015

Vehicle Type	Vouchers Issued	Total Voucher Funds	Average Voucher	% of Total Vouchers
Parcel Delivery	829	$20,888,000	$25,197	39%
Beverage Delivery	440	$14,680,000	$33,364	21%
Other Truck	374	$9,492,000	$25,380	18%
Food Distribution	153	$4,033,000	$26,359	7%
Uniform & Linen Delivery	112	$2,800,000	$25,000	5%
Tow Truck	75	$2,373,000	$31,640	4%
LP Pick-up & Delivery	47	$942,000	$20,043	2%
Refuse Hauler	23	$934,000	$40,609	1%
School Bus	13	$390,000	$30,000	1%
Shuttle Bus	20	$706,776	$35,339	1%
Utility Truck	7	$208,000	$29,714	.3%
Urban Bus	19	$1,375,000	$72,368	.9%
Total	**2,112**	**$58,821,776**	**$27,851**[1]	**100%**

[1]Overall average for all HVIP vouchers issued to date (ARB, 2015c)

Table III- 3: Heavy-Duty Hybrid Vehicle Availability and CalHEAT Heavy-Duty Truck Classification

CalHEAT Classification		GVWR (pound - lbs.)	Hybrid Commercial Availability*
2b/3	Pickups/vans	8,501 - 14,000	Yes
3 - 8	Rural/Intracity	14,001 - 33,000+	Some
3 - 8	Urban	14,001 - 33,000+	Yes
3 - 8	Work Site Support	14,001 - 33,000+	Yes
7 -8	Short Haul/Regional	26,001 - 33,000+	Some
7- 8	Over the Road/Line Haul	26,001 - 33,000+	No

*Note: "Yes" means commercially available, "Some" means mostly available as demonstration/pilot vehicles, "No" means not yet available.

Figure III- 2: Vocational Heavy-Duty Hybrid Vehicles

Parcel Delivery

Hino Class 5 delivery/ local delivery food distribution hybrid box truck

Class 5 step van local delivery

Beverage Delivery

Class 7/8 day cab bulk transport, and day cab and straight-truck side-loader local delivery

Class 7/8 day cab bulk transport, straight-truck and class 5 step van local delivery

Food Distribution

Transit

C. Degree of Hybridization

Heavy-duty hybrid vehicles could be designed with various degrees of hybridization, ranging from very minimal to very extensive integration of hybrid components into the vehicle. This range reflects a spectrum of electrification, ranging from a few percent to greater than 50 percent of a vehicle's power requirements, as well as a progression of increasing vehicle weight and cost. The degree of hybridization is generally grouped into three broad categories from least reliance on alternative power source to most: micro hybrids, mild hybrids and full hybrids.

1. Micro hybrid

This category of hybrid system has a small electric motor that is designed to provide start/stop function for the combustion engine, including limited charging capability, acting as a generator, during regenerative braking events. The electric motor in a micro hybrid is the smallest of the three designs since it does not provide any tractive power. This design is the least intrusive, as it imposes minimal alterations to the conventional powertrain, e.g., engine, transmission, driveshaft, and batteries. Micro hybrids resulted in the lowest incremental cost and the smallest weight penalty of the three degrees of hybridization. However, because of the low level of hybridization, fuel economy improvement over conventional vehicle is also the least of the three hybrid designs, typically in the range of 10 percent or less.

2. Mild hybrid

In a mild hybrid design, the level of hybridization is higher than for micro hybrids. In addition to the features found in micro hybrids, e.g., engine start/stop, mild hybrid designs provide a greater level of regenerative braking capability, larger batteries, and more sophisticated controllers to manage energy flow. In this design, the electric motor also provides supplementary tractive power to the combustion engine when needed, as in acceleration events, and may also provide a limited level of electric only operation. Depending on duty cycles, a mild hybrid system designed for a specific vocational application may not provide engine start/stop capability if there is insufficient idle time to justify that added feature. Due to the added features, the electric motor in a mild hybrid needs to provide more power than in a micro hybrid, leading to larger size and weight. The increased power of the electric motor in a mild hybrid design also necessitates a larger battery system to provide the needed electrical energy and to store electrical power as a result of the greater brake regenerative capabilities. The combustion engine in a mild hybrid system is usually kept the same size and specifications as in an equivalent conventional vehicle. As a result, a mild hybrid design is heavier and more costly to be produced than a micro hybrid design. However, this is partially offset through the greater fuel economy improvement, generally 10 percent to 20 percent over a conventional vehicle.

3. Full hybrid

Full hybrid designs represent the most extensive integration of hybrid components into a conventional vehicle. The electric, or hydraulic, motor(s) in a full hybrid design has a prominent role as a tractive power source, either partially in the case of a parallel hybrid design or fully in a series hybrid design. The electrical system is capable of powering all vehicle electrical accessories, potentially including auxiliary components that are traditionally mechanically driven. Full hybrids require much larger battery packs and electric, or hydraulic, motor(s). Weights and costs are the highest of the three hybrid designs and the level of engine and hybrid system integration and control electronics is the most sophisticated. The benefits of a full hybrid design are the greatest level of fuel economy benefit of the three designs, typically 20 percent to 50 percent. Full hybrids also provide a direct path to a plug-in HEV design, as well as providing a catalyst for innovations toward zero and near-zero technologies for heavy-duty vehicles. Plug-in HEVs are discussed in more details in Section E.3. Some examples of full hybrid vehicles that are currently commercially available are Hino delivery vans, BAE Systems transit buses, and Parker Hannifin refuse haulers.

D. Hybrid Architectures

Three main hybrid architectures are currently commercially available for heavy-duty vehicle applications: parallel hybrid, series hybrid and, to a lesser extent, series-parallel hybrid. Each design has its own advantages and limitations and could be designed to ideally serve specific vocational and duty-cycle applications. These hybrid architectures

are employed in either full or mild hybrid vehicles. All these hybrid architectures share some common elements, as shown below:

- A drivetrain, typically involving an ICE and electric or hydraulic motor(s), that can recover and reuse energy in addition to the main engine;
- An energy storage system (e.g., batteries, hydraulic accumulators; flywheels, ultra-capacitors);
- Control electronics; and
- Regenerative braking.

The main differences between these hybrid designs is the relative size of drive train components, energy storage system and the level of interaction of the motive power source(s) with the drive wheels. The following sections will discuss each hybrid design in greater depth.

1. Parallel hybrid

In a parallel hybrid design, both the ICE and the electric motor have direct, independent connections to the transmission. Either power source, or both together, can be used to turn the vehicle's wheels through mechanical devices, such as torque couplers through gearbox differential, or speed couplers through planetary gear. Through these mechanical device linkages, the torques and speeds from each motive source can be added or decoupled. A parallel hybrid system is often designed so that the ICE provides power at cruising or high speed regimes, where it is most efficient, and the electric motor provides power during stop-and-go operations and at low speeds. Both power sources would typically be designed to operate together during accelerations. A parallel hybrid system typically requires a lower level of integration with the existing vehicle drivetrain compared to a series hybrid and thus could be more easily adapted as a retrofit, in addition to new original equipment manufacturer (OEM) vehicles.

Because the internal combustion is designed to provide power during cruising and high speed operation, the energy storage system in a parallel hybrid design does not have to be sized to provide all the energy needed for sustained high speed, long distance operations. Consequently, the required battery pack can be smaller compared to series hybrid design. In addition, since in a parallel hybrid, the electric motor would always have some amount of load sharing from the combustion engine, it does not have to be sized to provide 100 percent of the tractive power requirements and consequently can be smaller. These factors, batteries and electric motor sizing, have the direct benefits of reducing cost and weight. The reduction in overall vehicle weight, combined with the efficiency of the ICE when operated at largely steady-state, high speed conditions making a parallel hybrid system well-suited to improve the fuel economy of higher speed, longer distance vocational vehicles. The parallel hybrid architecture is not as efficient if operated in stop-and-go operation due to the transient load demands placed on the engine. An example of a parallel hybrid architecture that is currently

commercially available is the Hino delivery vans. A schematic of a parallel hybrid electric design is shown in Figure III-3.

Figure III- 3: Schematic of Parallel Hybrid Electric System

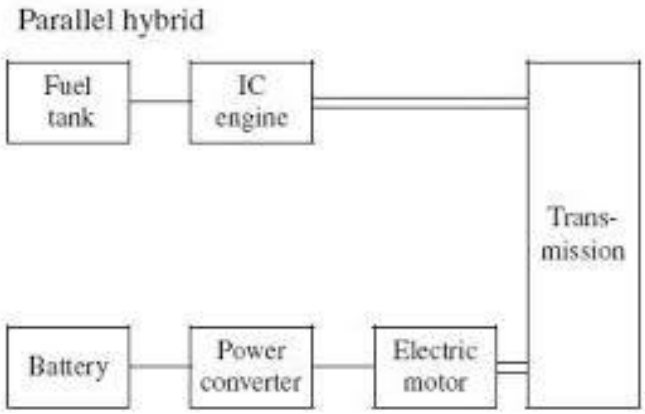

2. Series hybrid

In a series hybrid design, the engine is not directly linked to the transmission or the drive wheels. The energy produced from the engine is converted to electric power by the generator which re-charges the energy storage device in order to provide power to one or more electric motors. The electric motor system provides tractive power to turn the wheels of the vehicle and recharge the batteries. Since the engine is not asked to follow the load requirements of the vehicle, it can be operated at its most optimum points in its speed-torque map, regardless of vehicle speed and load. The engine can also be switched off for temporary all-electric operations. A schematic of a series hybrid electric design is shown in Figure III-4.

Figure III- 4: Schematic of Series Hybrid Electric System

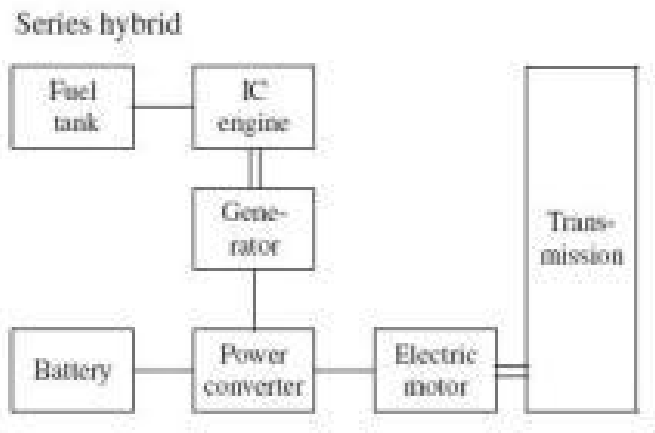

Because the electric motor in a series hybrid system is the only source of tractive power, it must be significantly larger than that would be needed in a parallel hybrid system for equivalent vehicle power requirements. In addition, the energy storage system, e.g., battery pack, must necessarily be larger as well. The added weight and cost for motors and batteries are the main drawbacks in a series hybrid design. Additional inefficiency is also present via the added energy conversion to go from mechanical energy to electrical energy to recharge the batteries and back to mechanical energy through the electric motor to drive the wheels. However, the added weight is partially offset through the elimination of the transmission and, potentially, other driveline components, such as drive shaft and differential, reducing complexities and mechanical losses. The cost of electric motors in a series hybrid will continue to be higher than for parallel hybrid as a result of the larger power requirement, but is expected to decrease through advances in technology along with increased production volume. The added inefficiency can also be offset by downsizing and designing the combustion engine in a series hybrid system to operate at the most optimum condition to maximize fuel economy and reduce emissions. An added benefit is the ability to more efficiently capture the kinetic energy from braking, due to larger motor and battery pack, through the regenerative braking system where the electric motor is used as a generator to recharge the batteries. A series hybrid power train is well-suited for stop-and-go, highly transient operations, such as transit bus and refuse hauler duty cycles. This design is not as efficient for sustained high speed or cruising operations, compared to parallel hybrid design, due to the sustained high energy demand that would be placed on the electric motor and energy storage system.

In a series hybrid, since the engine is never directly engaged to the drive wheels, its operating regimes can be designed for the most optimum points. This has two direct benefits, oxides of nitrogen (NOx) emission control and zero-emission potential. Since the engine is not asked to vary its power output to follow the vehicle transient load requests, NOx emissions from the diesel engine are more easily addressed. Diesel engines are most efficient when operated within the optimum band of the engine torque

maps. A series of hybrid architecture can allow the engine to operate within that optimum range, resulting in potential increase in fuel efficiency. Series hybrid architecture also provides a pathway to zero-emission technology. Since the engine is only used to produce power to charge the battery, this could pave the way for a lower emission combustion alternative, e.g., microturbines, or zero-emission alternative, e.g., fuel cell.

As fuel cell technology continues to develop and becomes mature, it could be easily transitioned into a series of hybrid architecture to provide a zero tailpipe emission hybrid platform for heavy-duty vehicles. Series hybrid electric transit buses are available from BAE Systems and series hydraulic hybrid refuse haulers are available from Parker Hannifin. The fuel cell technology assessment report contains more in-depth information on the status of fuel cell technology in heavy-duty vehicle applications.

Microturbines operate at very high speed and do not have the requisite torque to for tractive power, but they are very efficient when operated at constant speed to charge the battery pack. Microturbines can be used in a series HEVs to charge the batteries for range extending power. Microturbine HEVs can operate on battery power alone or in a combination of the battery power and microturbine. A microturbine is a type of ICE that, due to its very high engine speed, is best suited for used as a generator converting fuel to electricity. Microturbines in general are fuel neutral (currently demonstrating both CNG and diesel) and more fuel efficient compared to conventional ICEs. Additionally, they are lighter in weight than conventional ICEs therefore extending the electric range capability.

Currently, microturbine HEVs are in the demonstration phase. One example of a microturbine used in HEV applications is the Capstone microturbine. The Capstone microturbine produces very low NOx and particulate matter (PM) emissions, can generate up to 10MW of power dependent on size and is low maintenance due to its simple design and no oil use (Capstone, 2014). Figure III-5 shows a diagram of the Capstone microturbine.

Figure III- 5: Microturbine Construction

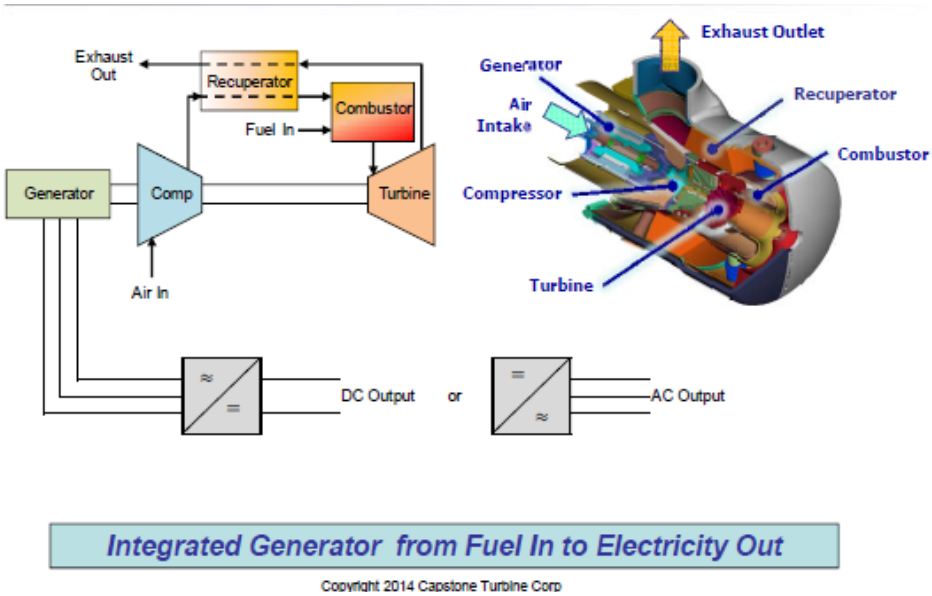

The Capstone microturbine is currently being integrated as part of a plug-in series hybrid repower kit for medium-duty commercial trucks by the company Wrightspeed. The repower kit's electric drivetrain utilizes a 25kWh-39kWh battery system and a 30-65kW Capstone microturbine. The plug-in feature enables the vehicle to charge the batteries with clean grid electricity through the use of a 10kW single phase SAE J1772 charger and operate part of its route on zero emission miles. Current projects demonstrating the Wrightspeed repowers are FedEx delivery trucks with both CNG and Diesel 30kW microturbines and North Bay refuse trucks repowered with either a 65kW Diesel or 65kW CNG (currently under development). The microturbine plug-in hybrid series drivetrain is shown below in Figure III-6.

Figure III- 6: Microturbine PHEV Series Drivetrain

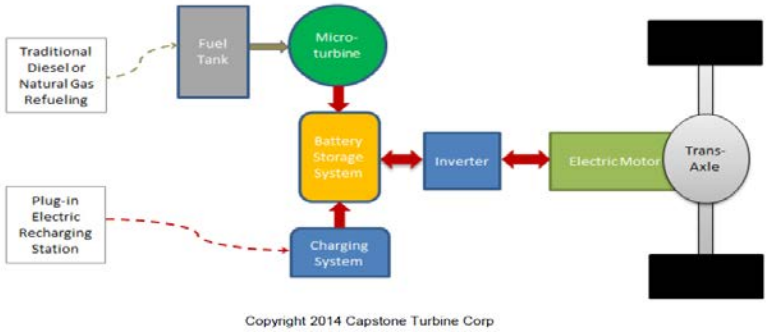

Wrightspeed is not the only company working with Capstone's microturbine; both Kenworth and Peterbilt are demonstrating Class 7 and Class 8 heavy-duty microturbine

range extended series hybrid trucks using Capstone's 65kW microturbines. Both trucks are operational and currently being tested to quantify the performance, efficiency, and economic benefits of a microturbine HEV. The Peterbilt truck is also known as the Wal-Mart Advanced Vehicle Experience or WAVE truck due to the retailer's heavy involvement in leading the project. The WAVE truck is using a 400 horsepower (hp) Parker electric motor and 47kWh CORVUS Li-ion batteries (Capstone, 2014). Testing and development on the WAVE truck is continuing with extensive aerodynamic studies, electrifying all vehicle accessory loads, including electrified steering, as well as researching into the optimal power requirements of advanced powertrains for use in class-8 trucks. The WAVE truck is slated to go to the Alternative Clean Transportation (ACT Expo) in May 2015. Figure III-7 shows some examples of the Capstone microturbine demonstration projects.

Figure III- 7: Capstone Microturbine Demonstration Projects

Wrightspeed Route Truck

(Medium heavy-duty, refuse and recycling application)

WAVE Truck

(Heavy heavy-duty, long haul application)

<u>Electrification of auxiliary components</u>

Any hybrid designs could incorporate various degrees of electrification of auxiliary components, such as power steering pumps, air conditioning compressors, engine cooling fans, etc. Auxiliary components are generally driven by the engine crankshaft or camshaft through the use of belts and pulleys or gears. The parasitic losses attributable to these auxiliary components had been estimated to be about 20 hp, representing roughly 5 to 10 percent of the power requirements of a typical heavy-duty vehicle (NRC, 2010).

Electrification of auxiliary components is desirable in three ways: engine efficiency, fuel economy improvement and emissions reductions. Engine efficiency is improved since the engine could be designed to operate at its most optimum conditions if it does not have to accommodate the power needs of the auxiliary components. In addition, more

of the engine's power could be used for motive power in the case of a parallel hybrid, or to provide electrical power to charge the batteries in a series hybrid system. Fuel economy would be improved due to enhanced engine efficiency and due to the elimination of the need to use on-board combustible fossil fuel source to power these auxiliary components through the engine. Emissions could also be reduced through the reduction of inefficient and/or more transient operating points attributable to the power draw from the improve these auxiliary components, e.g., air conditioning and power steering pump loads.

3. Series-parallel hybrid

In a series-parallel design, either the ICE or the electric motor, or both working together, is used to turn the vehicle's wheels, depending on the driving conditions. This hybrid design combines best aspects of series and parallel hybrids for vocational applications: utilizing the series hybrid advantage at low speed and the parallel hybrid advantage at higher speeds through the use of power split and/or electronic controller.

From standing start or at low speed operation, the ICE is turned off and electric motor propels the vehicle. For normal operation, the power produced by the ICE is split, providing tractive power and generate electricity. In this mode, the electric motor also assists with tractive power or to generate electricity for recharging the batteries during regenerative braking events when it acts as a generator. Under full-throttle operation, e.g., acceleration and high speed situations, the battery provides extra energy. This design is well-suited for applications where both stop-and-go, city driving and high constant speed, highway driving are required. The disadvantage of this design is the added complexity of the design and control electronics for power management, added components, and larger energy storage system (compared to a parallel hybrid). Series-parallel hybrid electric architectures are not yet widely available for heavy-duty on-road vehicle applications. However, a Pacific Gas & Electric plug-in series-parallel hybrid electric utility work truck, built by Efficient Drivetrains, Inc., is currently being demonstrated. A schematic of a series-parallel hybrid electric design is shown in Figure III-8.

Figure III- 8: Schematic of Series-Parallel Hybrid Electric System

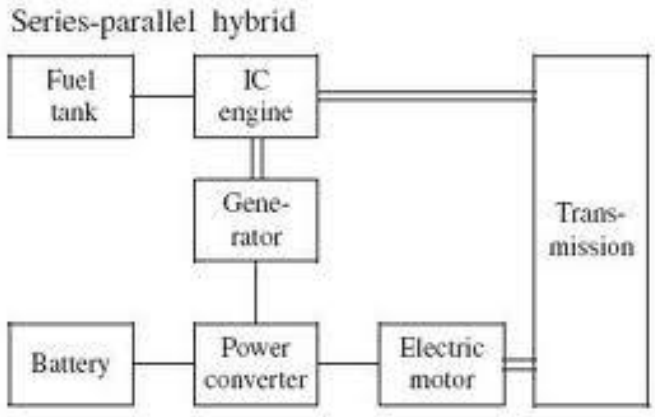

The foregoing descriptions of the three hybrid architectures, although presented generally for HEVs, are also applicable to HHVs, where the hydraulic pumps/motors are used instead of the electric motors and hydraulic accumulators are used as the energy storage device instead of batteries.

The next section discusses the different types of hybrid categories, including hybrid-electric, hydraulic hybrid, plug-in hybrid, microturbine, and catenary hybrids. Not all hybrid architectures described in Section D are able to be used in all hybrid categories described in Section E. For example, most hybrid categories could be developed using either the parallel or series architecture, but microturbine hybrids can only be designed as a series hybrid for heavy-duty vehicle application, due to the microturbine's insufficient torque for use directly as a tractive power source.

E. Hybrid Categories

1. Hybrid-electric

Hybrid electric was the first platform that was developed for use in the heavy-duty vehicle sector. This platform sill represents the most commercialized platform for vehicles across a wide range of vocational duty cycles. A hybrid electric heavy-duty vehicle could employ any of the three major hybrid architectures described in the previous section, parallel, series, and series-parallel hybrids. HEVs are currently available for a broad spectrum of vocations, including beverage delivery, parcel delivery, uniform and linen delivery, food distribution, transit buses.

The major components of a HEV include: an ICE, one or more electric motors, generator, power inverter, an energy storage system (batteries, ultra-capacitors), control modules, and mechanical coupling devices. The sizing of the components and the level

of control complexity depends on the hybrid design and the level of hybridization targets.

2. Hydraulic

Hydraulic hybrid technology for heavy-duty vehicle application is relative new compared to hybrid electric technology, but is making rapid advances and is proving to be an ideal technology for certain high power demand, stop-and-go applications such as refuse haulers, shuttle buses and city transit buses. HHVs can be designed in any of the three common hybrid architectures, but is currently available primarily in the parallel and series configurations.

The basic components of a hydraulic hybrid include: an ICE, one or more hydraulic pumps/motors, accumulators and reservoirs, and hydraulic control modules. Energy storage is via hydro-pneumatic accumulators where a hydraulic fluid is pumped into a high-pressure accumulator and compresses an inert gas, typically nitrogen. To provide tractive power, energy is released through the expansion of the inert gas and pushes the hydraulic fluid through the actuator through hydraulic motor(s) and into a low-pressure reservoir. Tractive power in a hydraulic hybrid system can come from the engine and the hydraulic motor in the case of a parallel hybrid, or via the hydraulic motor(s) exclusively, in a series design. The energy that would be needed to charge up the high-pressure accumulator can come from either the engine or the hydraulic pumps, through regenerative braking, for either parallel or series design. Figure III-9 shows a layout of the major components is a series hydraulic hybrid system.

Figure III- 9: Schematic of Series Hydraulic Hybrid System

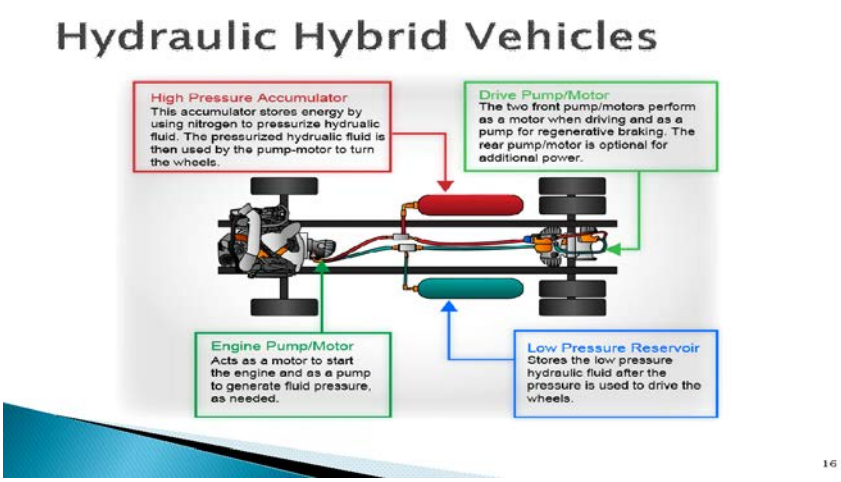

A major characteristic of a hydraulic hybrid system is that it has very high power density, defined as the maximum amount of power that can be supplied per unit mass or volume, and relatively low energy intensity, defined as the amount of energy stored per

unit mass or volume. This means that a hydraulic hybrid system would be very efficient if designed for high power applications that have very high power demand over short periods, such as stop-and-go duty cycles. Because of its low energy density, hydraulic hybrids are not good candidates for applications that require long-distance, high-speed duty cycles, such as over-the-road line haul trucks or regional carriers that have extended periods of highway cruising operations. Another major characteristic of hydraulic hybrid is the ability to very efficiently capture the kinetic energy from braking events, compared to a hybrid electric system, upward of 70 percent or greater. Because of the high efficiency of the regenerative braking system in a HHV, brake wear is greatly reduced since the actual mechanical brakes are not being asked to provide the bulk of the braking requirements to slow the vehicle down. As a result, cost savings due to reduced brake maintenance intervals are a significant positive benefit.

3. Plug-in

Plug-in hybrid electric vehicles (PHEV) share characteristics of conventional heavy-duty hybrids in that they draw motive power from two sources, an energy storage system and a range extender (usually an ICE). They differ from conventional hybrids in that they have the ability to be recharged from an external charger that is connected to the power grid. The power grid offers a cleaner way to recharge the vehicle through its supply of clean electricity that helps to reduce emissions even further. Dependent on the powertrain design, this external charging in addition to larger battery packs allows for extended all-electric driving range.

There are two operation modes for PHEVs; charge depleting mode and charge sustaining mode. Charge depleting mode is when the vehicle operates exclusively on electric power (all-electric range). Charge sustaining mode is when the vehicle combines the two power sources for operation.

Currently, in the truck market most of the PHEV development is occurring in the medium-duty sector, primarily in the utility truck application where trucks require work site power and have shorter daily routes. For utility trucks they spend a significant amount of their time and fuel while idling at a work site utilizing a power take off (PTO) to perform the job at hand. An ePTO uses the on-board battery storage to power the truck's hydraulic boom along with auxiliary equipment, emergency lights, and heating and air conditioning of the cabin. An ePTO eliminates works site idling, saves fuel and reduces noise which improves safety by enabling better communication between workers and reducing potential hearing damage. Furthermore, the noise reduction also allows workers to extend their work days in areas with noise ordinances improving the crew efficiency and savings (EEI, 2014). Table III-4 shows the noise reduction with ePTO use. Figure III-10 shows two examples of PHEV work site support trucks.

Table III- 4: Noise Reduction Due to ePTO

Field Test Noise Measurement Results	Standard Bucket Truck	ePTO Equipped Bucket Truck
Boom operation (full throttle)	68 dB average	57 dB average
Idling with no boom	61 dB average	Practically silent

Figure III- 10: PHEV Work Site Support Trucks

With PHEV technology the electric motor can be sized large enough to generate electricity for use outside of the vehicle; this is referred to as exportable power capability. Current medium- and heavy-duty PHEVs have the capability of exporting 18-75kW with recent truck demonstrations showing export power capability of up to 120kW. This export capability to provide backup power to the grid in the event of an outage along with improving power quality, reducing feeder congestion, and managing costs associated with increased demand and reliability is a huge benefit of the PHEV technology (EEI, 2014).

Another targeted application besides utility trucks that may show promise in the future for heavy-duty PHEV technology would be in drayage activities (CalHEAT, 2013). So far, most OEMs have been hesitant to enter the medium- and heavy-duty PHEV market allowing smaller start-up companies to develop the technology such as Electric Vehicle International (EVI) and Odyne. The technology readiness of heavy-duty PHEVs is currently in the pilot/demonstration phase. Table III-5 shows current available models and specifications of medium- and heavy-duty PHEVs offered by EVI and Odyne (EVI, 2014; Odyne, 2014).

Table III- 5: Current Medium- and Heavy-Duty PHEV Examples

Make	**EVI**	**Odyne**
Weight Class	MD	MD/HD
Electric Range (miles)	40	n/a
Battery (kW-hr)	99	14.2 or 28.4
Motor (kW)	120	51
Charge Time (hr)	6 - 12	4 – 8*
Export Power (kW)	up to 75	up to 18
Applications	Utility, Construction, Tree Services, Logistics	Utility, Cranes, Refuse, Digger Derrick, Dump truck, Septic truck, etc.

*using 220V/30A supply

4. Catenary

A catenary-powered hybrid vehicle (CHV) refers to a HEV with the ability to access overhead catenary wires for propulsion power through the use of a pantograph. A CHV differs from pure electric catenary-powered vehicles in that it has operational flexibility. That is, it can operate with unlimited zero emission range when connected to the overhead catenary wires but can also operate outside of the catenary system as a fuel efficient HEV when further range is needed, as in long haul trucking applications. This technology allows zero emission operations in targeted dense urban areas where emissions and noise reductions are needed (GNA, 2012). Pure electric catenary-powered heavy duty vehicles are a proven technology and currently exist in many public transportation systems (trolley, light rail, city buses) and mining applications. While there are many benefits to utilizing an electric catenary system in a hybrid truck platform it's also important to note some potential concerns regarding the catenary infrastructure, such as space constraints and visual pollution or visibility. The CHV concept is currently being demonstrated and tested in Germany with the Siemens catenary system which is referred to as the eHighway. Here is the U.S., as part of the Zero Emission I-710 Project Siemens is currently working with Volvo to demonstrate this CHV technology after a 2 mile stretch of catenary system is installed in the area of the Ports of Los Angeles and Long Beach (Siemens, 2014). There should be results from this project in the 2016 timeframe. The technology readiness of the CHV is at the

pilot/demonstration stage. Figure III-11 shows some catenary-powered hybrid demonstration trucks.

Figure III- 11: Catenary-Powered Hybrid Demonstration Trucks

IV. Performance Metrics

The next four sections in this chapter discuss various performance metrics for heavy-duty hybrid vehicles such as fuel economy, emissions, operational factors, and improvement targets.

A. Fuel Economy

After the initial capital cost of hybrid vehicles, fuel economy is probably the most important factor affecting a fleet's decision to purchase hybrid vehicles. Without the savings associated with reduced fuel consumption, there would be no economic incentives to purchase hybrid vehicles since fleets would be operating at a financial loss over the life of the vehicles. Many studies have shown the dependency of fuel economy on the type of duty cycle a vehicle is operated (NREL, 2015; Kittelson et al., 2015). Duty cycles with high kinetic intensity, typically cycles with the most stop-and-go, as well as aggressive acceleration and deceleration events, would yield the best fuel economy improvement from hybrids when compared to conventional vehicles. Fuel economy improvement ranging from about 10 percent to 50-70 percent is possible, depending on the architecture of the hybrid system and the operational regimes. Generally, the range of fuel economy improvement has a direct correlation to the degree of hybridization, with the highest benefits favoring the greatest level of electrification. Table IV-1 shows the general range of fuel economy improvement for the different types of currently available hybrid technologies.

Table IV- 1: General Range of Fuel Economy Improvement

Hybrid Types	Range of Fuel Economy Improvement*
Micro Hybrids	Up to 10 percent
Mild Hybrids	10 percent – 20 percent
Full hybrids	20 percent – 50 percent
Parallel Hybrids	20 percent – 40 percent
Series Hybrids	30 percent – 50 percent

* Some sources have reported fuel economy increases as high as 70 percent (U.S EPA, 2015; 21st CTP, 2013).

B. Emissions

1. GHG emissions

Heavy-duty hybrid vehicles operate at higher fuel economy levels compared to their equivalent conventional counterparts, and hence have lower fuel consumption. Since less fossil-based fuel is combusted, the amount of carbon dioxide (CO2) emitted is also

proportionately reduced. The CO2 emission reductions observed vary depending on the efficiency of a hybrid system design and the operational duty cycles of the hybrid vehicle. The observed range of CO2 reductions could potentially be improved upon further advances in hybrid component efficiency, system integration and more ideal matching of vehicle to operational duty cycles.

2. Criteria pollutant emissions

While the case for greenhouse gas emission benefits of heavy-duty hybrid vehicles is relatively straightforward, NOx emission reduction benefits are much less definitive. Anecdotally, it is generally presented that hybrid vehicles will reduce all types of emissions because, as often argued, with reduced fuel consumption less emissions will be produced, including NOx emissions. This is true for CO2 emissions, since the correlation between the amount of fuel combusted and CO2 emissions is well established.

The same conclusion, however, cannot be drawn with complete certainty pertaining to NOx emissions from heavy-duty hybrid vehicles. If the hybrid system is well designed and integrated, coupled with judicious placement in the vocations with appropriately matched duty cycles, NOx emissions from a hybrid vehicle can be lower compared to an equivalent conventional vehicle. This is shown in a study comparing a series hybrid-electric bus where the hybrid bus consistently had lower per-mile NOx emissions compared to a similar conventional bus (Kittelson et al., 2015). Other studies show inconclusive NO_x benefits (CalHEAT, 2012). Finally, other studies are showing the hybrid vehicles producing higher NOx emissions levels than the conventional vehicles (NREL, 2015).

The conflicting results point to the difficulty of making a generalized statement concerning the NO_x emissions benefit or the disbenefit of a heavy-duty hybrid vehicle to a conventional diesel vehicle. The NOx emissions characteristics of a heavy-duty hybrid vehicle are dependent on the following parameters, all of which must be considered when comparing criteria emissions from a hybrid vehicle to a conventional one:

a. Engine model year (MY), engine OEM's, emission certification levels
b. Transmissions and rear axle ratios
c. Vehicle weight
d. Duty cycles
e. Engine-out exhaust temperatures, and
f. SCR effectiveness and dosing strategy

When comparing emissions from a hybrid and a conventional vehicle, it is important to ensure that, as indicated in the first bullet, "a" above, the hybrid and conventional vehicle engines being compared are as closely similar as possible. First, it is essential

that the tested engines are of the same MY and manufacturer. Even though all engines manufactured for MY 2010 and later have to comply with the same emissions standards, that in itself is not sufficient justification for assuming that the engines are the same. Because of the way heavy-duty engines are certified, two engines maybe certified to the same standard, but may emit at different levels, and some may even emit at higher level than the emissions standards, as allowed through the averaging and banking provisions. Furthermore, there are changes and improvements an OEM could make to their engines to improve performance and emissions controls such that engines that were manufactured only one year apart could have significant differences in emissions control technology. An example is 2011 and 2012 MY engines, both would be certified to the 2010 emissions standards, yet the selective catalytic reduction (SCR) system for the 2012 engines from some OEM were much better designed, more effective and robust for controlling NOx emissions than the 2011 MY engine from the same manufacturer. Second, the emissions certification levels of the engines need to be carefully reviewed to ensure that the certified levels are similar and to prevent the possibility of comparing an engine that was certified to the standard against an engine that was certified to a family emission limit (FEL).

As listed in bullets “b” and “c” above, the transmissions, rear axle ratio, and vehicle weight of the hybrid and conventional vehicles are also important factors to note to the extent that they would have an impact on the torque demand from the engines, engine speed as well as on acceleration and transient responses.

The last three bullets, "d" to "f", are important since the performance, both fuel economy and emissions, of a heavy-duty hybrid vehicle are heavily influenced by the duty cycles the vehicle is being tested. Duty cycles are important since they are indicators of the relative magnitude of transient or steady state nature the vehicle is experiencing. Duty cycles affect both conventional and hybrid engines, but not necessarily equally. Since in a hybrid vehicle, the electric motor, to varying degrees, is shaving off some of the vehicle load requirements from the combustion engine, the torque demands on the engine are reduced. This situation could result in the engine operating more often at less efficient points on its speed-torque map, impacting both fuel economy and emissions. A possible effect may include lower exhaust temperatures, which could ultimately affect the efficiency of an after-treatment system, such as a selective catalytic reduction system, to reduce NOx emissions. Another related issue that needs further investigation is the dosing strategies of SCR systems. In an SCR system, ammonia is injected in accordance with control algorithms designed for specific engines and operating regimes to maximize NOx reduction while minimizing ammonia slips. Since a hybrid system could impact how the engine operates, the SCR dosing strategies that were originally designed for a conventional vehicle may no longer be performing at their optimized design parameters.

Figure IV-1 shows engine speed-torque maps of engine out NOx emissions and engine operating regimes for a hybrid and a conventional vehicle. The engine maps for the

engine used in a hybrid vehicle are shown on the left column and the engine maps for the engine in a conventional vehicle is shown on the right column. The bottom two charts shows the operating points of the hybrid engine and the conventional engine as the vehicle is sending a power request of 75 kW on the chassis dynamometer. As can be seen from the circled red regions, with the same power request, the engine in the

Figure IV- 1: Engine-Out NOx Emissions and Engine Operation

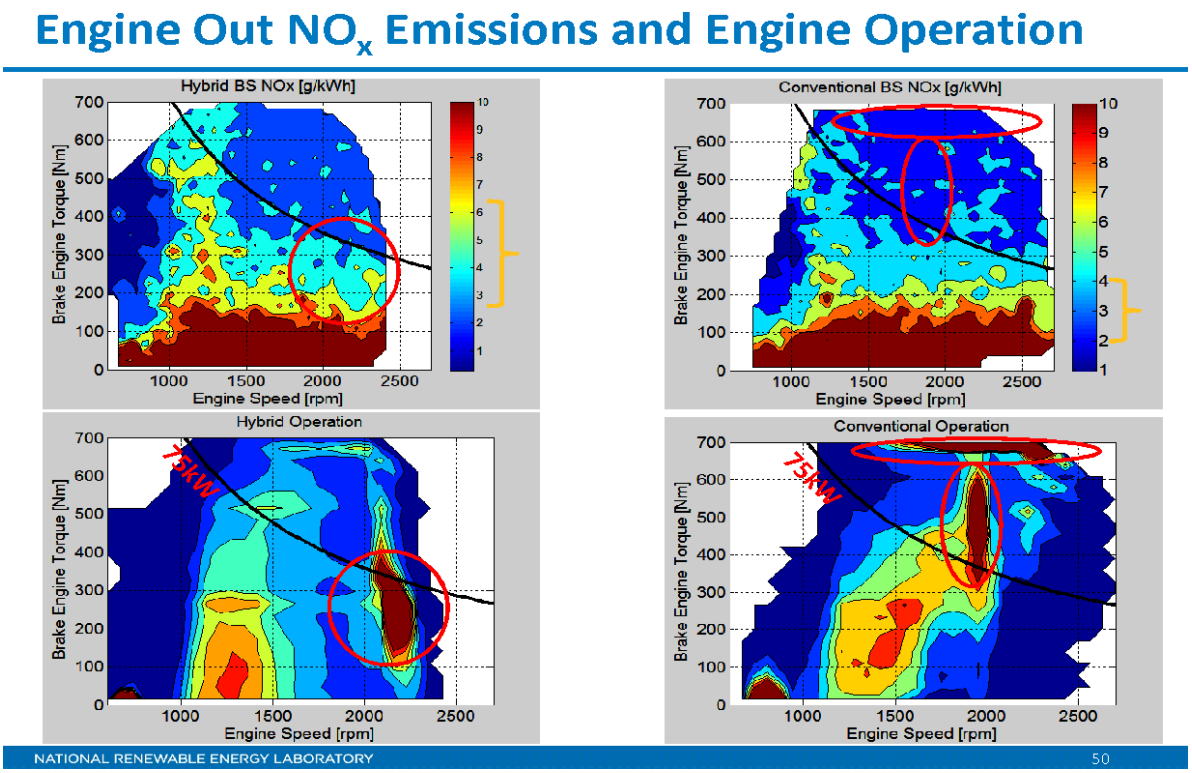

(NREL, 2014)

hybrid vehicle (lower left) is operating in the lower torque and higher engine speed of the map, and the engine in the conventional vehicle is operating at a higher torque and lower speed map. The top two charts show the engine-out NOx emissions for these corresponding operating points. As can be seen in the top left chart, the engine-out brake specific NOx emissions are higher (about 2.5 to 6.5 g/kW, circled region) for the engine in the hybrid vehicle compared to the brake specific engine-out NOx emissions from the conventional vehicle (about 2 to 4 g/kW, circled regions) as shown in the top right chart.

The issues discussed above demonstrate the need to approach the issue of NOx emissions from hybrid vehicles with an abundance of caution. The full impact of a hybrid system on the engine and after-treatment devices, control algorithms, duty-cycles and test procedures need to be evaluated in a fully integrated approach in order to more

fully understand the test results. More research needs to be conducted to investigate these issues before the nature of NOx emissions from heavy-duty hybrid vehicles can be more fully understood. The complex interplays between a hybrid system and the remainder of a vehicle also point to the need for better integration and communication between hybrid, engine and vehicle OEMs.

ARB is working towards a mandatory certification program for heavy-duty hybrid vehicles by participating in the Phase 2 federal greenhouse gas standards rulemaking effort with U.S. Environmental Protection Agency (EPA) and the National Highway Traffic Safety Administration (NHTSA). To address the potential NOx emission increases for heavy-duty hybrid vehicles discussed above, ARB recommends a mandatory supplemental check for NOx emissions for all hybrid vehicles used to meet the Phase 2 standards (ARB, 2014c). Hybrid vehicles should be required to confirm compliance to current NOx emission standards using the supplemental check. ARB staff believes that including this supplemental check for NOx emissions in Phase 2 rule is an important element in avoiding NOx increases for heavy-duty hybrid vehicles. This procedure would encourage manufacturers to further develop well-integrated hybrid technologies.

C. Operational Factors

Operational factors such as performance and reliability, operating and maintenance costs, uptime and range all need to be compared to a fleet's specific requirements when considering the purchase of hybrid vehicles. Such factors are discussed below. Cost is discussed further in Chapter V.

1. Performance and Reliability

Fleets have specific performance requirements for their vehicles that are essential to efficiently conduct their daily business operations. Some of those vehicle parameters are: range, torque rating, acceleration rate, etc. Many currently available heavy-duty hybrid vehicles are able to meet, and in some cases exceed, those performance goals if the hybrid vehicles were properly matched to the specific requirements of a fleet. Many hybrid vehicles are ideally suited for local pick-up and delivery applications and other stop-and-go vocations like transit buses. For these applications, range is not usually an issue and with the presence of added torque from either an electric or hydraulic motors, acceleration is also acceptable. However, in certain instances, some early hybrid vehicles were unable to meet fleets' performance expectations in terms of acceleration and ascending speed on hills, as well as lower than anticipated fuel economy gains. These performance issues could be addressed by proper system sizing based on the vehicle's duty cycles and operational requirements as well as more appropriate matching of vehicles to vocations.

Another area of concern for fleets is the reliability of hybrid vehicles compared to the conventional diesel vehicles. Heavy-duty diesel vehicles are a mature and proven technology, with very impressive reliability records. A number of fleets that are unfamiliar with heavy-duty hybrid vehicles still have concerns that it is not a mature technology when compared against diesel technology. Significant technological advances have been made in the last decade that have narrowed the perceived reliability gap to a difference of only a few percent. Recent studies have demonstrated that hybrid vehicle uptime is reported to be 99 percent for a fleet of hydraulic hybrid refuse haulers (Fleets & Fuels, 2013) and equal to that for diesel vehicles (CALSTART, 2012).

Another issue with engine downsizing, separate from the certification issues as discussed, has to do with practical day-do-day performance requirements. However, it must be emphasized that this issue is more of a design consideration as opposed to a technical barrier. It does point out to the need for being judicious with engine downsizing and, more importantly, for more complete vehicle integration to ensure that vehicle operational targets are achieved. Vehicle OEMs have specific performance requirements on acceleration rates, including minimum expectations on the ability of a vehicle to drive on grade. Smaller engines have a lower torque compared to a larger engine, which when installed in a heavier service class vehicle could lengthen the acceleration time in some cases, even with the added torque from the electric motor. In one comparative study, two class-8 beverage delivery trucks, one hybrid, one conventional, were tested for maximum acceleration rates from 0-60 mph. The conventional vehicle is a Freightliner with a Cummins 8.3 L, 285 hp, 800 ft-lb, 33,840 lbs. test weight and the hybrid vehicle is a Kenworth with a Paccar 6.7L, 280 hp, 660 ft-lb, 34,300 lbs. test weight (460 lbs.+). The hybrid truck took 104 seconds to accelerate to 60 mph while the conventional truck took 77 sec, a 35 percent increase in time (NREL, 2012). Figure IV-2 shows the results of the acceleration tests from 0 to 60 miles per hour for these two vehicles.

Figure IV- 2: Acceleration Test, 0 – 60 miles per hour (mph), of Class 8 Beverage Delivery Hybrid and Conventional Trucks

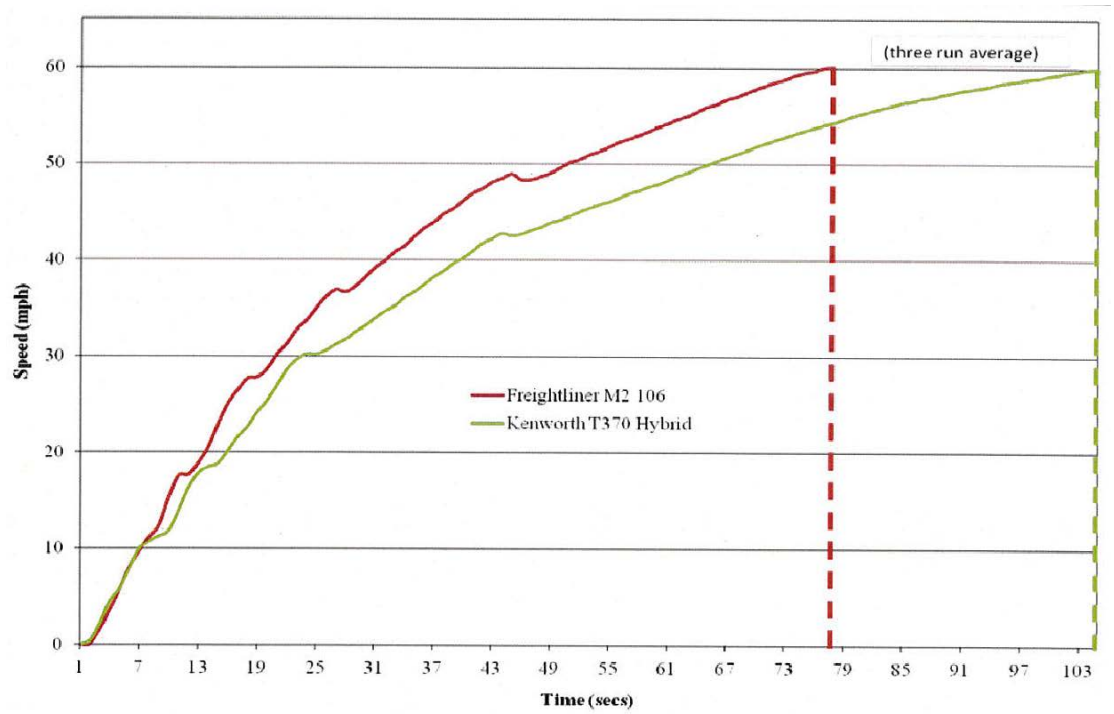

(NREL, 2012)

2. Maintenance

Because of the pervasiveness of heavy-duty diesel vehicles in the trucking sector, fleets are used to dealing with that technology. They know what they can expect to get from diesel vehicles and they know how to service and how much it cost to maintain them. For many fleets, hybrid vehicles are something different, which they are not used to dealing with. The possibility of extended vehicle down time is an important issue since their mechanics are usually not knowledgeable in the servicing of the hybrid system. Often, a fleet will have to wait for the hybrid manufacturer's technician to come to service the vehicles, which could lead to longer vehicle down time. As fleets acquire more and more hybrid vehicles, a solution would be to train their mechanics to maintain and service hybrid vehicles to the same level of competency as for conventional diesel vehicles.

A hybrid vehicle could have higher maintenance and operating costs in some areas (e.g., hybrid propulsion system, increased downtime due to additional vehicle complexities and fleet's potential unfamiliarity with servicing hybrid vehicles), but could also yield operational and maintenance savings (e.g., reduced fuel costs, reduced brake wear), compared to a conventional vehicle. Therefore, all facets of operations must be carefully considered in any evaluation of the economics of hybrid and conventional vehicles.

An evaluation conducted by National Renewable Energy Laboratory (NREL) of eleven UPS hybrid electric delivery vans and eleven conventional diesel delivery vans over an eighteen-month period analyzed various parameters of operating and maintenance costs in details, including in-use fuel economy, maintenance costs, fuel costs, operating costs, and reliability (NREL, 2012a). The hybrid vans were found to have higher maintenance cost per mile for their propulsion system, but have lower tire and brake wear costs per mile than the diesel van. However, the labor costs for the hybrid manufacturer's technicians servicing the hybrid system were not included in this comparison since they were covered through UPS's warranty and service contract with the hybrid manufacturer. If those labor costs were included in this analysis, it would raise the maintenance costs for the hybrid vans compared to the conventional vans. Offsetting the higher overall maintenance costs of the hybrid vans in this evaluation was the lower fuel cost per mile for the hybrid vans (11 percent less) compared to the conventional vans. When the total operating and maintenance costs were considered, the total cost differential between the hybrid van ($0.589/mile) and the conventional van ($0.573) was not statistically significant. Figure IV-3 and IV-4 show the breakdown of the analysis for the conventional and hybrid vans, respectively, in this study, for various maintenance categories, including tires, brakes, propulsion and others. The propulsion maintenance costs were further separated into fuel system, transmission, electrical, battery/charging system, engine and exhaust costs. The "other" maintenance costs have the largest shares of the total maintenance costs for both the conventional and hybrid vehicles and include costs for items such as oil change, filter change, coolant and air conditioning system maintenance, etc.

Figure IV- 3: Conventional Maintenance Cost per Mile

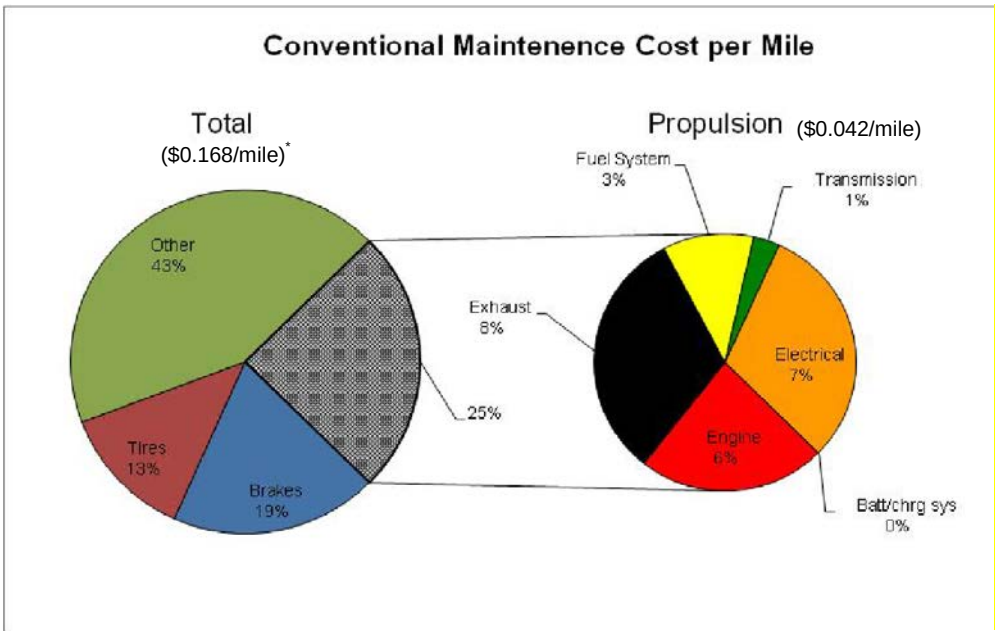

*The difference between the total maintenance costs for conventional vs. hybrid was not statistically significant (NREL, 2012a)

Figure IV- 4: Hybrid Maintenance Cost per Mile

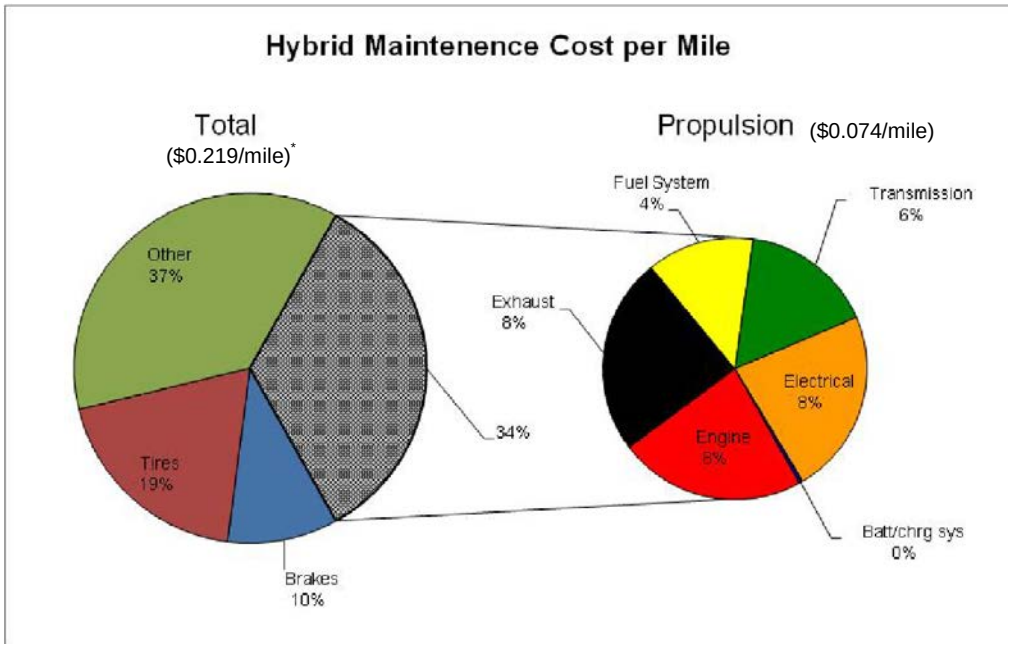

*The difference between the total maintenance costs for conventional vs. hybrid was not statistically significant (NREL, 2012a)

3. Operating range and fueling infrastructure requirements

Operating range is usually not an issue for hybrid vehicles as they are sourced with both an ICE and an electric motor. In this respect, range would be impacted only in situations where the fuel tank capacity is reduced due to space and/or weight constraints. However, in some situations, the added weight of the hybrid system could cause a reduction in range, particularly in weight-sensitive vocations. For example, in refuse collection routes, the added weight of a hybrid system could lower the total load carrying capacity of the vehicle such that it would require more than one trip to complete a route that could be done in one trip with a conventional truck. This situation is similar to that observed for compressed natural gas (CNG) refuse trucks where the added weights of the CNG tanks have resulted in more total trips to complete some routes. In some cases, the solution to this issue would be as simple as switching the hybrid refuse trucks on to either shorter routes, or collecting lighter materials, where possible. The City of Sacramento has been operating two series hydraulic refuse haulers since 2012 and encountered this weight issue. They had successfully addressed this problem by using the hydraulic hybrid trucks to collect recycling material rather than the heavier household wastes. This way, they are able to complete the same route utilizing the same number of trips as would be needed with the conventional diesel trucks.

D. Improvement Targets

As noted previously, significant technological progress has been made for heavy-duty hybrid vehicles in a relatively short timeframe. However, additional advances are possible and would be needed to improve efficiency, reliability, and applicability.

1. Hybrid electric

Areas where additional improvements are needed to reduce costs and weights and improve system performance include: drive unit optimization, rechargeable energy storage system optimization, electrified auxiliary accessory components and vehicle integration. Table IV-2 provides a summary of these improvement potential areas for heavy-duty hybrid-electric vehicles.

The 21st Century Truck Partnership identified performance goals for heavy-duty HEVs in a February 2013, report, Roadmap and Technical White Papers (21st CTP, 2013). Staff believes these goals are reasonable and will be needed to decrease cost and improve performance in order to move heavy-duty hybrid vehicles to a greater level of vocational penetration and commercial success. A summary of these technology goals are shown in Table IV-3.

Table IV- 2: Heavy-Duty Hybrid Electric Vehicle Technological Improvement Potential

Technology/Issue	Improvement/Optimization Potential
Drive unit	ICE and electric motor, engine controls
Rechargeable energy storage system	Reliability, longevity, weight, cost
Electrified power accessories	Availability, cost
System integration	Engine and transmission, On-Board Diagnostics (OBD), hybrid drive and engine, SCR dosing

Table IV- 3: Technology Goals for Heavy-Duty Hybrid Electric Vehicles

Technology	Goals
Electric Machines	● Hybrid design life: 1 million miles or 15 years ● Power density: 1 kW/kg (currently 0.5 kW/kg) at a cost target of $23/kW ● Efficiency: 96-97percent (currently 94percent) ● Develop non-permanent magnet motor technology
Inverter Design/Power Electronics	● Improve switching devices, heat transfer capabilities, higher switching frequencies ● Reduce overall weight by 20percent
Energy Storage Systems	● System cycle life: 5,000 full cycles ● Expand operating temperature range ● Increase power and energy densities by 50percent ● Cost targets: $45/kW and/or $500/kW-hr for energy battery by 2017 ● Cost targets: $40/kW and/or $300/kW-hr for power battery by 2020
Hybrid System Optimization	● Fuel economy improvement: 60percent for urban, stop-and-go drive cycles, 25percent for regional and line-haul applications ● Hybrid system integration: component sizing, regenerative braking strategies, greater level of coordination between hybrid drive unit and IC engine operation
Electrified Power Accessories	● Increase availability ● Reduce weight, cost ● Improve reliability

2. Hydraulic hybrid

Areas where additional improvements are needed to reduce costs and weights and improve system performance include: drive unit optimization, hydraulic energy storage system optimization, hydraulic controls and hydraulic energy transfer fluids. Table IV-4 provides a summary of these improvement potential areas for heavy-duty HHVs. The 21st Century Truck Partnership has also identified performance goals for heavy-duty HHVs in a February 2013, report, Roadmap and Technical White Papers. A summary of these goals are shown in Table IV-5.

Table IV- 4: Heavy-Duty Hydraulic Hybrid Vehicle Technological Improvement Potential

Technology/Issue	Improvement/Optimization Potential
Hydraulic pumps and motors	Engine downsizing, internal combustion engine and hydraulic pump/motor, engine and hydraulic controls
Hydraulic controls and energy transfer fluids	Reliability, cost
Hydraulic energy storage system	Efficiency, life, cost
System integration	Engine and transmission, OBD, hydraulic drive and engine, SCR dosing

Table IV- 5: Technology Goals for Heavy-Duty Hydraulic Hybrid Vehicles

Technology	Goals
Hydraulic Energy Conversion Devices	● Hydraulic pumps/motors: higher pressure limits (7,000-10,000 psi, currently 5,000 psi) ● Optimize: efficiency, weight and noise reduction ● Efficiency: 96-97percent (currently 94 percent) ● Develop non-permanent magnet motor technology
Hydraulic Controls	● Optimize hydraulic circuit design ● Higher operating pressure valves ● Reduce cost, improve efficiency and reliability
Hydraulic Energy Storage	● Improve system life to meet life targets of vehicle ● Increase specific energy and energy densities (higher maximum pressure, lower weight) ● Optimize manufacturing process for high-volume production

Technology	Goals
Hydraulic Energy Transfer Fluids	● Develop cost-effective fluids, wider operating temperature range ● Complies with bio-degradability and fire resistance requirements ● engine operation

V. Cost

A. Overview

Heavy-duty hybrid vehicles currently available all costs higher than their equivalent conventional vehicle counterparts. Several factors contributes to the higher costs: low-volume new technology versus high-volume matured technology and additional componentry that are present in a hybrid vehicle, e.g., electric motor, battery, hydraulic pumps, etc., that are not needed in a conventional diesel vehicle. Although cost is not the only factor in a purchasing decision, it is oftentimes a central factor affecting a fleet's acquisition strategy.

Currently, the incremental difference in cost compare to the equivalent conventional vehicles can range from about $8,000 to $10,000 (about 20 to 25 percent of vehicle purchase cost) for the lighter-class (class 2b) vehicles to about $200,000 (about 40 to 50 percent of vehicle purchase cost, assuming $525,000 as the cost for a baseline natural transit bus (ARB, 2015d) and $400,000 for a baseline diesel transit bus (Hartzell, 2014)) for heavier class-8 transit bus. The wide range of incremental costs reflects the wide range of vehicle vocations, operational requirements, as well as the nature of the hybrid technology. Costs tends to be lower for mild hybrids, primary due to the lower level of hybridization, i.e., small electric motors, smaller battery packs, etc., and higher for full hybrid vehicles, due to the increased level of hybridization that entails added components and more sophisticated controls and integration costs. The issue of costs needs to be overcome in order to realize much more significant penetration of heavy-duty hybrid vehicles into more and more sectors of the trucking industry.

B. Analysis

1. Factors for cost differential between hybrids and conventional heavy-duty vehicles

a. Components

The main components in a hybrid vehicle that differ from those in a conventional vehicle are electric motor and battery. Currently, the cost of electric motors is about $50/kW, and the cost of the lithium-ion batteries is about $700/kW-hr. Lithium-ion batteries while expensive are currently utilized in hybrid vehicles due to their high energy density (kWh/kg), high power density (W/kg), high cycle life and safety compared to other battery chemistries. However, it is expected that with increased volume sales and technology improvements battery costs will be reduced significantly in the future (EEI, 2014). Refer to the *Draft Technology Assessment: Medium- and Heavy-Duty Battery Electric Trucks and Buses* for further information on battery technology. Added on to

these costs are costs for inverters, controllers and various other components. Due to current low production volume, the costs for these components are still high due to the lack of economies of scale.

A near-term goal, as shown in Table IV-3, for research efforts is to reduce these costs to $23/kW for electric motors and $300/kW-hr to $500/kW-hr for batteries by the 2017-2020 timeframe (21st CTP, 2013). Figure V-1 also shows various other studies on cost projections for batteries. Other components will also need to have further cost reductions that are anticipated to occur through improved manufacturing efficiency with increased volume.

Figure V- 1: Forecasts for Battery Costs [1][2][3]

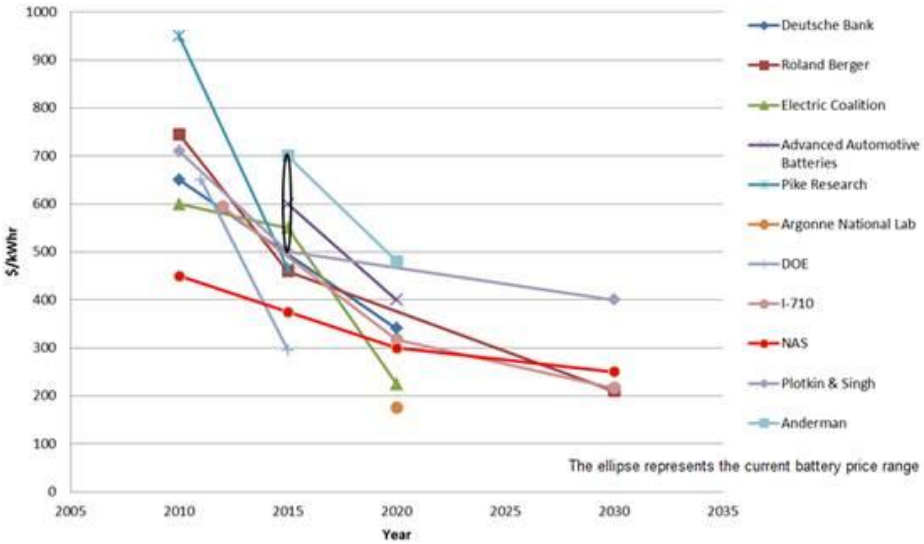

(CALSTART, 2013; DOE, 2012; EEI, 2014; NAS, 2013; Sakti, 2015)

[1] Battery cost estimates may be based on the cells only, on the battery stack, or on the entire pack. This, along with production volume assumptions and the year the projection was made, doubtless contributes to some of the range of battery costs and battery cost projections shown in this figure for a given year.

[2] The estimates from the U.S. DOE's Quadrennial Technology Review (DOE, 2012) presume that U.S. DOE production targets are met; the I-710 study includes relatively aggressive reduction assumptions (CALSTART, 2013).

[3] Battery costs for the light-duty fleet are approaching the $200/kWh range. Costs for medium- and heavy-duty vehicle battery packs tend to be higher due to issues such as different chemistries for different duty cycles, ruggedization needs, and expected useful life."

b. Manufacturing

The current market for heavy-duty hybrid vehicles is still very small compared to that for diesel vehicles. The heavy-duty hybrid market is made even smaller when the limited number of products is spread out across different manufacturers and the various platforms that have to be designed to meet specific operational requirements of a particular vocation. For example, a hybrid drivetrain that was designed for a transit bus cannot be simply installed in a refuse hauler, even though these vocations both have closely-resembled stop-and-go duty cycles. The level of vehicle differentiation is even more pronounced when considering vehicles that operate in different duty cycles. In

addition, because heavy-duty hybrid vehicles are most efficient where the vocation is specifically focused, the market size for any particular hybrid design shrinks even more.

Due to the myriad of performance expectations for heavy-duty vehicles across the spectrum of different vocational requirements and packaging constraints, a hybrid system manufacturer cannot just design a single hybrid system and expect their system to be installed in tens of thousands vehicles. Unlike the light-duty vehicle sector, where only a few manufacturers are producing hundreds of thousands of hybrid vehicles that have comparatively narrower operational performance envelopes, that kind of scale of economies does not exist in the heavy-duty sector.

Economies of scale generally occur with increased production volume, as fixed costs are spread out to more units. However, the heavy-duty vehicle sector differs in substantive ways from the light-duty vehicle sector that could act to retard the speed of which economies of scale is realized and to limit the level of technology transfer between these sectors. Some of the areas of differences are shown in Table V-1. Due to these differences between light-duty and heavy-duty vehicle sectors, knowledge from basic research could move across sectors, but the myriad of vehicle power platform requirements place a limit on the actual amount of applied technology that could be transferred (21st CTP, 2013).

Table V- 1: Comparison of Heavy-Duty Vehicle and Light –Duty Vehicle Market Characteristics

Characteristics	Heavy-Duty Vehicles	Light-Duty Vehicles
Gross Vehicle Weight	8,501 – 80,000+ lbs.	Up to 8,500 lbs.
Peak Horsepower	150 to 600 hp	70 to 300 hp
Continuous Horsepower	100 – 600 hp	25 – 60 hp
Annual Mileage	20,000 – 250,000 miles	8,000 – 20,000 miles
Expected Lifetime	250,000 1,000,000 miles	150,000 miles
Market Volume	800,000 units	3,000,000 units
# of configuration variants	Millions	A few thousands

(21st CTP, 2013)

Heavy-duty hybrid platforms' manufacturing process needs to be improved with increased modular designs for basic components that could be transferred from one vehicle platform to another, which can be fine-tuned and tailored to meet the performance requirements of a particular vehicle platform. The market for heavy-duty hybrid vehicles will continue to grow, both in quantity and variety, and will result in downward impact on lower manufacturing costs, but the magnitude of cost savings due to increased production volume in still unknown.

Staff anticipates that heavy-duty hybrid technologies will continue to make tangible progress, both in the near term and in longer term. The product development progression from a research concept to full commercialized product advances in various

phases. Attendant with each phase of development is an approximate number of vehicles that would be produced to accomplish the objectives of a particular development phase. The typical heavy-duty vehicle industry commercialization stages and production volume are shown in Table V-2.

Table V- 2: Commercialization Stages and Production Volume

Commercialization Stages	Production Volume
Research & Development	Not Applicable
Demonstration Phase	1-5
Pilot Phase	5-100
Deployment Phase	100+
Commercialized/Widespread Adoption	10,000+ Annually

Another component of manufacturing cost is the cost due to vehicle integration. Presently, with the sole exception of Hino where the hybrid truck was designed and manufactured vertically from the ground up, the manufacturing process for a heavy-duty hybrid truck is not vertically integrated. There are different entities representing engine manufacturers, chassis/body manufacturers, transmission manufacturers, hybrid drive manufacturers. To produce a heavy-duty hybrid vehicle, someone has to source and integrate the hybrid drivetrain components into a conventional vehicle and test the vehicles. The cost of vehicle integration has been estimated to be about 50 percent of hybrid component costs (Zhao et al., 2013).

2. Cost projection for near-term hybrids

Cost is a function of supply and demand. The cost of heavy-duty hybrid vehicles is still high compared to conventional vehicles due to the factors discussed in section B, above. With higher demand, cost is expected to come down. The potential reduction in costs will likely affect different hybrid architecture and different vehicle types in different ways, such that cost reductions would not be uniform across all vehicle platforms. Predictions for cost reductions in either hybrid components or as complete vehicles generally have assumed about a 50 percent reduction from current prices by the 2020 timeframe (21st CTP, 2012; Zhao et al., 2013). Even at this projected price reduction level, there would still be an incremental cost of heavy-duty hybrid vehicles, and depending on the application, it could potentially be still significant. There will probably always be an incremental cost for heavy-duty hybrid vehicles in the foreseeable future, if only due to the increased number of components and system complexities, even though it will continued to be narrowed. However, if fuel economy, maintenance savings and product reliability continue to improve, an economic case could potentially be made for some applications in the 5 to 10 year timeframe. For other applications where the incremental costs continue to still remain high, incentives could be used to make them economically viable.

When evaluating the economics of heavy-duty hybrid vehicles, it is critical that the evaluation process considers the total cost of ownership as opposed to looking at solely the purchase price, which oftentimes is the primary factor many fleets used in weighing vehicle purchasing alternatives. When total cost of ownership is considered, which takes into account available incentives and possible cost savings through reduced operating and maintenance costs, the economics of purchasing heavy-duty hybrid vehicles may prove to be an attractive choice. The economics of procuring heavy-duty hybrid vehicles is improving over time as costs continue to come down and operational savings improved, especially if the vehicles are deployed in applications with the appropriate duty cycles, which would result in shorter payback periods.

In addition to being a function of supply and demand, cost is also a function of the manufacturing process and product distribution and retails network. The total cost of a technology, such as heavy-duty hybrid vehicles, is a composite of direct costs (e.g., raw material and labor) and indirect costs (e.g., research and development, overheads, marketing and distribution, and profit markups) (ICCT, 2015). For any new products, there is a learning curve associated with both direct and indirect costs that has a downward pressure on those costs over time as a manufacturer becomes more efficient with the production processes, as the in-field performance of the product improves (reducing warranty costs) and as other indirect costs are lowered through streamlining and improved efficiency. As shown in Figure V-2, the direct cost multiplier is generally reduced by 20 percent after two years of production and another 20 percent after an additional four years of production. The direct cost multiplier continues to decrease at a much slower rate up to about 20 years after the initial production, at which point the direct cost multiplier stabilizes, as manufacturers are able to fully optimize their direct costs by that time. Even by the tenth production year, the direct cost multiplier has decreased to about 50 percent of the initial cost. Even though this does not necessarily equate to a 50 percent reduction in the total cost of the technology, it is similar in magnitude to the assumed 50 percent cost reduction for hybrid vehicles by the year 2020 discussed at the beginning of this section.

Figure V- 2: Direct Manufacturing Cost Learning Curve

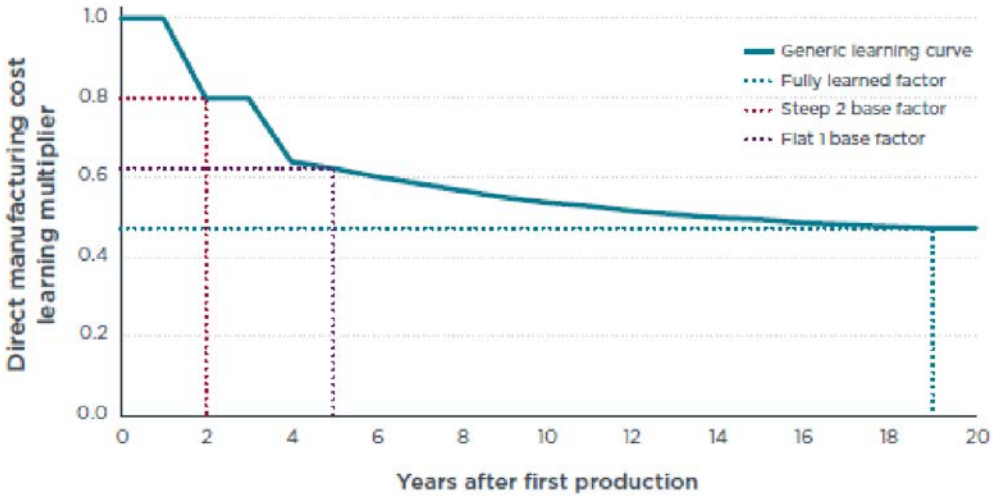

(ICCT, 2015)

3. Incentives programs and effects on market deployment

The initial cost of hybrid vehicles is probably the single most important criterion affecting a fleet's purchasing decision. Figure V-3 shows the results of a survey of 82 fleet managers on the most important factors affecting their purchase decisions for hybrid vehicles (CALSTART, 2012). On factors specifically pertaining to hybrid vehicles, purchase cost ranks the highest, followed by their confidence in the technology and the perceived lack of industry/OEM support. As with any new or emerging technologies, the cost for heavy-duty hybrid vehicles will remain high in the near term, until a critical mass is reached when the prices will start to come down. This is an area where government incentives have a critical role in assisting early-adopter fleets overcome the cost hurdle to move the technology gradually towards mainstream acceptance. Incentives need to be structured to pay for a portion, or all of the incremental cost depending on the hybrid technology and targeted vocations, which when combined with the calculated fuel and maintenance savings would yield a payback period of 4 to 5 years, but preferably 2 to 4 years. Appendix A provides detailed descriptions of incentive programs that are available at the local, state and federal levels.

Figure V- 3: Factors Affecting Fleet's Purchasing Decision

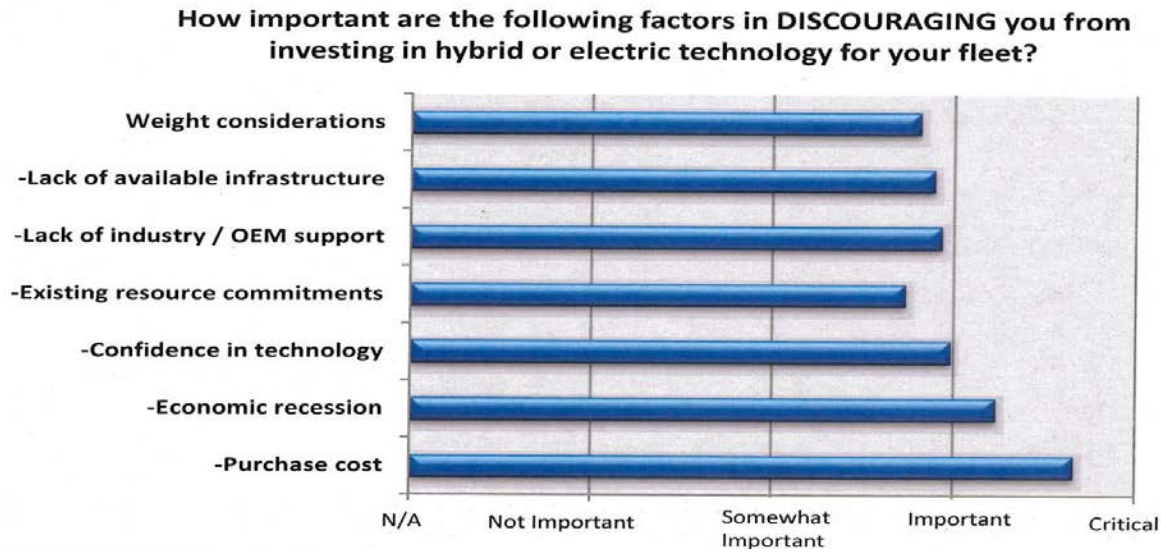

(CALSTART, 2012)

Any incentives programs need to be targeting the specific sector, or hybrid architecture, of the heavy-duty hybrid industry to spur the development and commercial deployment of that specific truck sector or hybrid technologies. This assessment has identified three objectives for incentives programs to spur development and commercial deployment:

a. Promote technological innovation and system/vehicle integration to build the best possible hybrid vehicle that is consistently reliable and efficient so as to build up fleets' confidence in the capability and performance of heavy-duty hybrid technologies.
b. Encourage the development and introduction of hybrid technologies into applications that have the largest potential deployment, e.g., package delivery and other local delivery vocations, to assist with achieving economies of scales of hybrid components.
c. Encourage the development and commercial deployment of very high energy density and power density applications combined with complete electrification of auxiliary loads that, once matured, would provide a direct pathway towards zero or near-zero tailpipe emission technologies.

California's HVIP is structured to encourage the achievement of the above objectives. Appendix A provides more complete discussions of HVIP and other incentive programs.

4. Factors affecting payback periods

Payback calculation refers to the process of evaluating all the costs and savings associated with the purchase of an asset. Heavy-duty vehicle fleets generally consider a five-year payback period as the outermost threshold that they will accept, as this is typically how long they would keep their vehicles. More often, the payback period needs to be from 2 to 3 years to encourage first-purchaser fleets to buy advanced technology vehicles, e.g., hybrids, such that they would not only able to recoup the cost of their investment before the disposal of the vehicle, but also to potentially capture some economic gains from the last couple years of their investment. Costs for a hybrid purchase include:

<u>Capital costs</u>

- Purchase cost
- Warranty cost
- Infrastructure cost (if applicable)

<u>Operating costs</u>

- Maintenance (repair, increased service time, reliance on OEM technicians)
- Vehicle down time
- Increased number of trips, if applicable (due to weight and range limits)

<u>Financing costs</u>

- Time value of money (interest rates)

Offsetting these costs are the savings that result from operating the hybrid truck instead of operating a comparable conventional truck.

<u>Incentives</u>

- Reduce vehicle purchase cost, if applicable
- Reduce infrastructure cost, if applicable

<u>Operating savings</u>

- Reduced fuel consumption (dependent on annual miles, duty cycle, vehicle fuel economy, fuel cost)
- Maintenance (reduced brake wear, oil change, etc.)
- Increased productivity, if applicable, for some vocations (requires less time to complete a route due to better vehicle performance)

Table V-3 lists some examples of payback periods for various hybrid technologies and vocational applications. Note that the calculations assumed a 47 percent reduction in the cost of hybrid vehicles from current prices and that diesel fuel cost was assumed to

Table V- 3: Hybrid Trucks—Payback Period Cost Analysis (Future 2015-2020 Technology)

Category	Description	Fuel Consumption Benefit (percent)	Forecasted Incremental Capital Cost ($)[a]	Annual Mileage[b]	Typical MPG[b]	Payback Period to Breakeven Years[c]
Class 2b Pickups and Vans	Parallel electric hybrid	18	$9,000	27,500	12.5	7.6
Class 3 to 6 Straight Box Truck	Parallel electric hybrid	30	$20,000	41,250	9.4	5.1
Class 3 to 6 Bucket Truck	Parallel electric hybrid with electric power takeoff	40	$30,000	13,300[e]	9.4	17.7
Class 8 Tractor Trailer Truck	Mild parallel electric hybrid with idle reduction	10	$25,000	137,500	5.75	3.5
Urban Transit Bus With federal subsidy of incremental cost	Series electric hybrid	35	$220,000 ($22,000)	137,500	6.0	9.1 0.9
Class 8 Refuse Hauler	Parallel hybrid electric	30	$39,000[f]	50,000	4.25	3.7
Class 8 Refuse Hauler	Parallel hydraulic hybrid	25	$30,000	50,000	4.25	3.4
Class 8 Refuse Hauler	Series hydraulic hybrid	50	N/A	50,000	4.25	N/A

(21st CTP, 2012)

NOTE: The break-even period is calculated on the basis of a fuel cost of $3.00/gal. For a fuel cost of $4.00/gal, the break-even period would be reduced by 25 percent.

[a]Costs for 2015-2020 are forecast to be reduced up to 47percent from 2013 to 2015 costs.

[b]Average values of ranges from NRC (2010), Table 2-1.

[c]Breakeven Time = Capital Cost/(Annual Mileage/MPG × percent Improvement × $/gal).

[d]Tables 6-5 through 6-16 provide future costs for 2015-2020. All tables are in NRC (2010).

[e]NRC (2010), page 138.

[f]NRC (2010), page 141.

be at $3.00/gallon. From Table V-3, it can be seen that some hybrid applications could potentially achieve acceptable payback periods of less than 4 years, even without incentives, assuming the projected cost reduction of 47 percent is accurate. In other cases, where the payback periods exceed the 5-year timeframe, either incentives to reduce the capital cost must exist and/or diesel fuel price has to rise to make an economic case.

VI. Certification

This chapter discusses certification issues for heavy-duty hybrid vehicles. Section A provides an overview of hybrid vehicle certification requirements. Section B describes warranty and useful life requirements, as well as ARB's proposed innovative technology regulation.

A. Overview of Hybrid Vehicle Certification Requirements

Heavy-duty hybrid vehicles are currently not required to be certified for emissions compliance, although the engines that are used in these vehicles have to be certified. Even though ARB already has in place voluntary certification procedures for heavy-duty hybrid vehicles, which were adopted in 2002, and subsequently amended in 2013, no heavy-duty hybrid vehicle has been certified using ARB's amended procedures.

However, since 2009, there were nine heavy-duty hybrid vehicles certified using the interim procedures adopted in 2002. There is a general recognition that uniform and cohesive nationwide certification procedures for heavy-duty hybrid vehicles need to be available and to be mandatory for hybrid vehicles to ensure the emissions reduction and fuel economy benefits are verified through standardized testing procedures. In addition, ARB requires heavy-duty hybrid vehicles to be certified for on-board diagnostics (OBD) compliance. Currently, one heavy-duty hybrid manufacturer, Hino, has obtained OBD certification for their heavy-duty hybrid engines. Recently, two hybrid system manufacturers, Allison Transmissions and BAE Systems, have also obtained OBD certification for their hybrid system.

More details on certification and testing issues are presented in Appendix B, Testing and Certification Issues.

B. Warranty and Useful Life Requirements

1. Warranty Requirements

All heavy-duty engines that are certified for sale in California have to comply with warranty requirements. Warranty requirements for heavy-duty engines apply to the proper functioning and performance of emission-related components over the warranty period. In case of a conventional vehicle, there is only one powertrain and the responsibility for fulfilling warranty requirements rests with the one entity whose name is shown on the Executive Order. In case of a heavy-duty hybrid vehicle, there are two sets of motive tractive sources, one hybrid and one diesel, that are, currently for the most part, manufactured by two different entities. No one entity has been willing to be the sole holder of the Executive Order for certification to assume the warranty

responsibility for the entire hybrid vehicle. Thus far, ARB has addressed this concern through the use of a Dual Executive Order process, where each certifying party is required to submit their own data and is held liable for their own system.

2. Useful Life Requirements

ARB existing regulations provide for different useful life periods based on the intended service class of the engine. For heavy-duty engines, there are three main truck service classes, each having a different useful life. Table VI-1 lists the intended vehicle service class and useful life requirements. As can be seen from Table VI-1, there are significant differences in the useful life requirements between the different service classes. The difference in useful life is most pronounced between the heavy heavy-duty service class (435,000 miles) and the medium heavy-duty service class (185,000 miles). This is one of the central issues surrounding engine downsizing for heavy-duty hybrid vehicles. A purchaser of a heavy-duty engine expects to receive a certain amount of life from their engines, which they would get if the engine of the correct service class is installed in the vehicle. In a hybrid vehicle, because of the added tractive power that is available from the electric motor, the power requirement from the diesel engine is therefore reduced. A number of hybrid manufacturers have argued that because of that, ARB should allow the use of a smaller engine such as a medium heavy-duty engine in a heavier service class.

Table VI- 1: Heavy-Duty Diesel Engines Intended Service Class and Useful Life Requirements

Intended Service Class (Heavy-Duty Diesel Engines)	**Useful Life (Miles)**
Light Heavy-Duty (14,000 lbs.<GVWR<=19,500 lbs.)	110,000
Medium Heavy-Duty (19,500 lbs.<GVWR<=33,000 lbs.)	185,000
Heavy Heavy-duty (>33,000 lbs. GVWR)	435,000

ARB recognizes the unique issues associated with the incorporation of a hybrid drivetrain on a heavy-duty vehicle and sees the potential for overall vehicle efficiency. However, the current useful life presents a significant issue to consider. A medium heavy-duty engine is only certified to 185,000 mile useful life, and if it's installed in a heavy heavy-duty service class, where the certification requires a much longer useful life of 435,000 miles, how would the discrepancy in useful life be addressed in case of emissions failures? Engine OEM, who designed the medium heavy duty engine to comply with the 185,000 miles will not take up the liability associated with the 435,000 miles useful life. Hybrid drivetrain will not assume that liability either since they are not the manufacturer of the engine. This is an important issue that needs to be addressed if downsized engines are allowed to be certified for use in a heavy heavy-duty hybrid application in order to reap full potential fuel economy and emission reduction benefits of hybrids.

3. OBD Certification Requirements

The HD OBD regulation, first adopted in 2005 and phase-in started in 2010 MY, requires the monitoring of hybrid components through the use of an on-board computer(s). The OBD system is required to monitor emission systems in-use for the actual life of the engine and be capable of detecting malfunctions of the monitored emission systems, illuminating a malfunction indicator light (MIL) to notify the vehicle operator of detected malfunctions, and storing fault codes identifying the detected malfunctions. The use and operation of OBD systems will ensure reductions in in-use motor vehicle and motor vehicle engine emissions through improvements of emission system durability and performance. One of the most important elements of the OBD system is that it requires comprehensive monitoring of all electronic powertrain components or systems that either can affect emissions or are used as part of the OBD diagnostic strategy for another monitored component or system.

OBD requirements for heavy-duty diesel hybrids certified for sale in California started in the 2014 MY. This requirement took effect to integrate single OBD system that covers the engine and hybrid powertrain. Manufacturers are required to apply for certification per the requirements set forth in California Code of Regulations (CCR), Title 13, Sections 1971.1 and 1971.5. The application for certification shall identify and describe the certified base engine, the hybrid system mated to it, all changes made to the certified engine along with the rationale describing the need for each change, and the vehicle applications into which the hybrid system will be installed.

For alternate-fueled engines, engine using a fuel different from or in addition to gasoline fuel or diesel fuel (e.g., CNG, liquefied petroleum gas), the implementation of OBD system meeting the requirements set forth in section 1971.1 begins with 2018 MY. The manufacturer shall submit a plan to the Executive Officer for approval of the monitoring requirements determined by the manufacturer to be applicable to the engine. Executive Officer approval shall be based on the appropriateness of the monitoring plan with respect to the components and systems on the engine (e.g., a spark-ignited dedicated CNG engine with a PM filter and a SCR system would be monitored in accordance with the misfire monitoring requirements for spark-ignited engines and with the PM filter and SCR system monitoring requirements for diesel engines typically equipped with the same components). For 2013 through 2017 MY engines, the manufacturer is required to implement an Engine Manufacturer Diagnostic (EMD) system meeting the requirements in section 1971 and monitor the NOx after-treatment (i.e., catalyst and adsorber) on engines so-equipped (CCR, 2013).

Hino Motors is a hybrid vertically integrated manufacturer that is OBD certified in accordance with section 1971.1 for MYs 2013 & 2014 diesel engine. Allison Transmissions and BAE Systems have recently obtained OBD certification for their hybrid systems for MYs 2014 (Allison) & 2015 (Allison, BAE). OBD requirements are another factor why there were only few ARB certified hybrid vehicles.

4. Proposed Innovative Technology Regulation

ARB's existing certification and OBD requirements provide a critical and effective mechanism for ensuring a vehicle's expected emission benefits are achieved and maintained. In recognition that ARB's existing certification requirements are geared towards traditional technologies, which may deter some manufacturers from developing promising new technologies, staff is developing an innovative technology regulation, scheduled for consideration by the Board in early 2016 (ARB, 2015a). This proposed regulation is intended to work synergistically with ongoing and anticipated State and federal truck and bus technology advancing regulations. ARB staff anticipates the regulation could also increase the number and diversity of promising technologies eligible for funding under ARB's Air Quality Improvement Program, the California Energy Commission's Alternative and Renewable Fuel and Vehicle Technology Program, and other technology-advancing incentive programs.

The Innovative Technology Regulation is intended to provide defined, near-term ARB certification and aftermarket part approval flexibility to help facilitate market launch of the next generation of truck and bus technologies. One option being considered by staff would provide tiered ARB certification and OBD requirements for an innovative technology, providing targeted flexibility at market launch and early technology deployment stages, and reverting back to full ARB approval requirements once the technology achieves a market foothold. Specific certification and OBD flexibility provisions should provide manufacturers with a defined, predictable, and practical ARB approval pathway, while preserving ARB's overarching objective to ensure expected emission benefits are achieved in-use.

VII. Conclusions

Hybrid technologies for heavy duty vehicles have experienced rapid growth over the last decade when the first few prototypes were developed for package delivery applications. As discussed in Chapter III, different heavy-duty hybrid vehicles are currently available in different levels of hybridization (micro, mild, full), architectures (parallel, series, series-parallel), and categories (hybrid-electric, hydraulic, plug-in, catenary). Depending on the specific hybrid design and applications, heavy-duty hybrid vehicles are either commercially available or are under various stages of development and demonstration.

Despite its significant growth, the technology for heavy-duty hybrid vehicles is still not fully matured. To reach its full potential and more widespread commercial success, heavy-duty hybrid technology must be able to compete on its own merits with conventional heavy-duty vehicle platforms. To get to that point, the heavy-duty hybrid sector must see broad-spectrum advances in terms of individual component efficiency, cost reduction, system design and vehicle integration, see discussion on improvement targets in section IV.D. Heavy-duty hybrids have the potential to outperform their conventional counterparts in some vocational applications and duty cycles, if life-cycle costs can be reduced to competitive levels.

Areas that need further enhancement range from hybrid components, e.g., electric motors, hydraulic pumps and motors, energy storage and conversion devices, to manufacturing process and vehicle integration. Advancement in these areas would allow hybrid technologies to penetrate into more power- and energy-intensive vocations. Achieving these performance and commercialization goals requires sustained efforts by manufacturers in research and development to develop more efficient components and drivetrains, and to optimize production processes and vehicle integration. Governmental entities and other industry stakeholders should assist in these efforts with funding for continued development of advanced technologies as well as continue to provide financial incentives to create and maintain market demand for heavy-duty hybrid vehicles.

Another challenge for heavy-duty hybrid vehicles is certification issues. Heavy-duty hybrid vehicles are currently not required to be certified for criteria emissions compliance, although the engines that are used in these vehicles have to be certified for hybrid application, and the vehicles must be certified for OBD compliance and must meet warranty requirements. ARB's existing certification and OBD requirements provide a critical and effective mechanism for ensuring a vehicle's expected emission benefits are achieved and maintained. In recognition that ARB's existing certification requirements are geared towards traditional technologies, which may deter some

manufacturers from developing promising new technologies, staff is developing the Innovative Technology Regulation, scheduled for consideration by the Board in 2016. The Innovative Technology Regulation under development is intended to provide defined, near-term ARB certification and aftermarket part approval flexibility to help facilitate market launch of the next generation of truck and bus technologies.

Despite the demonstrated fuel economy benefits of heavy-duty hybrid vehicles for many vocations and drive cycles, many commercial fleets are still not fully embracing hybrid technologies. A central reason for fleets' reluctance appears to be the higher cost of heavy-duty hybrid vehicles, particularly for the heavier vehicle classes. Although operating and maintenance savings from hybrid vehicles could, in some cases, provide an overall life-cycle cost savings compared to conventional vehicles, fleets may still have reservations on the economic viability of hybrid vehicle purchases unless the payback periods occur quickly within the periods that fleets typically keep their vehicles. As discussed previously, government incentives have been instrumental in reducing the incremental cost barrier, which have allowed many early-adopter fleets to purchase heavy-duty hybrid vehicles. Government financial incentives will continue to be needed in the near term to assist with reducing the incremental cost of hybrid vehicles and to provide stimulus for continued development of more efficient and lower-cost heavy-duty hybrid technologies.

Hybrid-electric technologies in the heavy-duty sector have significant benefits; primarily regarding increased vehicle efficiencies resulting in fuel economy improvements and air quality benefits from reduced greenhouse gas emissions. In addition, heavy-duty hybrid technology plays a substantial role in further advancing the development of battery and electric drive components that are needed for heavy-duty near-zero and zero emission vehicles. For example, the hybrid electric drive system used in hybrid heavy-duty vehicles is adaptable to new technologies, such as heavy-duty fuel-cell vehicles, that have potential for further emission reductions.

Advances in energy storage technologies and electric drives would assist with the progression toward greater level of electrification and provide synergistic benefits for zero and near-zero heavy-duty vehicle technologies. This is particularly true for the series hybrid architecture where, due to the decoupling of the engine from the drive wheels, the combustion engine could be replaced with a non-combustion power source, such as fuel cell, which would provide a zero-tailpipe emission vehicle.

Heavy-duty hybrids directly benefit the advancement of innovative clean technologies and remain an important part of ARB's technology roadmap to transform the heavy-duty on-road fleet into one utilizing zero and near-zero emission technologies to meet air quality and climate change goals.

VIII. References

1. (21st CTP, 2012) "Review of the 21st Century Truck Partnership," Second Report, National Academy of Sciences, 2012.

2. (21st CTP, 2013) "Roadmap and Technical White Papers," National Academy of Sciences, 2013.

3. (Air & Waste, 2013), Shauna L. Hallmark, Bo Wang & Robert Sperry, "Comparison of on-road emissions for hybrid and regular transit buses", Journal of the Air & Waste Management Association, 63:10, 1212-1220, DOI:10.1080/10962247.2013.813874 n,

4. (ARB, 2013) California Air Resources Board, "ARB's Staff Report: Initial Statement of Reasons (ISOR): "Notice of Public Hearing to Consider the Proposed Greenhouse Gas (GHG) Regulations for Medium- and Heavy-Duty Engines and Vehicles, Optional Reduced Emission Standards for Heavy-Duty Engines, and Amendments to the Tractor-Trailer GHG Regulation, Diesel-Fueled Commercial Motor Vehicle Idling Rule, and the Heavy-Duty Hybrid-Electric Vehicles Certification Procedures," October 2013, <http://www.arb.ca.gov/regact/2013/hdghg2013/hdghg2013isor.pdf>.

5. (ARB, 2013a) California Air Resources Board, "ARB's Carl Moyer Program Fact Sheet," December 2013, <http://www.arb.ca.gov/msprog/moyer/factsheets/moyer_program_fact_sheet.pdf>.

6. (ARB, 2014) California Air Resources Board, "ARB's Truck Loan Assistance Program Summary," April 2014, <http://www.treasurer.ca.gov/cpcfa/calcap/arb/summary.pdf>.

7. (ARB, 2014a) California Air Resources Board, "ARB's California Interim Certification Procedures for 2004 and Subsequent Model Hybrid-Electric and Other Hybrid Vehicles in the Urban Bus and Heavy-Duty Vehicle Classes," June 2014, <http://www.arb.ca.gov/regact/2013/hdghg2013/hdghg2013.htm>.

8. (ARB, 2014b) California Air Resources Board, "ARB's Implementation Manual for the Fiscal Year 2013-14 Hybrid and Zero-Emission Truck and Bus Voucher Incentive Project," August 2014, <http://www.californiahvip.org/docs/HVIP_Y4_Implementationpercent20Manual_2014-08-01.pdf>.

9. (ARB, 2014c) California Air Resources Board, Letter to U.S. Environmental Protection Agency, December 29, 2014.

10. (ARB, 2015a) California Air Resources Board, "Certification and Aftermarket Conversion Approval Flexibility for Innovative Medium- and Heavy-Duty Engine and Vehicle Technologies (Innovative Technology Regulation)," workshop presentation, March 2015, <http://www.arb.ca.gov/msprog/itr/itr.htm>.

11. (ARB, 2015b) California Air Resources Board, "Proposition 1B: Goods Movement Emission Reduction Program Update to Program Guidelines," Staff Draft Concept Paper, April 15, 2015, <http://www.arb.ca.gov/bonds/gmbond/docs/prop_1b_goods_movement_program_staff_draft_concept_paper_april_2015.pdf>.

12. (ARB, 2015c) California Air Resources Board, "Final Approved Fiscal Year 2015-16 Funding Plan for Low Carbon Transportation Investments and the Air Quality Improvement Program," June 30, 2015.

13. (ARB, 2015d) California Air Resources Board, "Advanced Clean Transit Regulation: Discussion Document," May 11, 2015, <http://www.arb.ca.gov/msprog/bus/bus.htm>.

14. (Automotive Fleet, 2015) Automotive Fleet, "Frost & Sullivan Offers Sunny Outlook for Global Electric, Hybrid Truck Market," January 26, 2015, <http://www.automotive-fleet.com/news/story/2015/01/frost-sullivan-offers-sunny-outlook-for-global-electric-and-hybrid-truck-market.aspx>.

15. (BAAQMD, 2014) Bay Area Air Quality Management District, "On-Road Project/Voucher Incentive Program Fact Sheet," July 2014, <http://www.baaqmd.gov/~/media/Files/Strategicpercent20Incentives/Carlpercent20Moyer/Onpercent20Road/MSIFpercent20CMPpercent20On-Roadpercent20Factpercent20Sheetpercent20Yrpercent2016_July2014.ashx>.

16. (CalHEAT, 2012) CalHEAT Truck Research Center, "Hybrid Class 8 Beverage Delivery Truck Demonstration Project, Final Report."

17. (CalHEAT, 2013) CalHEAT Truck Research Center, "CalHEAT Research and Market Transformation Roadmap for Medium- and Heavy-Duty Trucks, Draft Final Project Report," June 2013, accessed October 10, 2014.

18. (CALSTART, 2012) "Demand Assessment of First-Mover Hybrid and Electric Truck Fleets," 2012-2016.

19. (Capstone, 2014) Capstone, “Capstone HEV Review,” July 2014, presented on September 12, 2014.

20. (CCR, 2013) California Code of Regulations, Title 13, Section 1971.1, “On-Board Diagnostic System Requirements – 2010 and Subsequent Model-Year Heavy-Duty Engines,” July 2013, <http://www.arb.ca.gov/msprog/obdprog/section1971_1_clean2013.pdf>.

21. (EDI, 2015) “EDI utility and telecom PHEV solutions” <http://www.efficientdrivetrains.com/solutions-utility.html>, accessed on May 12, 2015.

22. (EEI, 2014) Edison Electric Institute, “Transportation Electrification: Utility Fleets Leading the Charge,” June 2014, <http://www.eei.org/issuesandpolicy/electrictransportation/FleetVehicles/Documents/EEI_UtilityFleetsLeadingTheCharge.pdf>, accessed on September 15, 2014.

23. (EVI, 2014) Electric Vehicles International, “Electric Vehicles International Utility Vehicle Plug-in Hybrid,” <http://www.evi-usa.com/Products/Vehicles/reev.aspx>, accessed on September 16, 2014.

24. (Fleets & Fuels, 2013) Rich Piellisch, “Parker RunWise Nears a Million Miles,” *Fleet & Fuels*, November 13, 2013, <http://www.fleetsandfuels.com/fuels/hydraulic-hybrid/2013/11/parker-runwise-nears-a-million-miles/>.

25. (Frost & Sullivan, 2013) Frost & Sullivan, “Strategic Analysis of Global Hybrid and Electric Heavy-Duty Transit Bus Market,” October 2013, <http://www.slideshare.net/sandeepkar/global-hybrid-and-electric-transit-bus-market?related=1>, accessed on September 29, 2015.

26. (GNA, 2012) Gladstein, Neandross & Associates, “Zero-Emission Catenary Hybrid Truck Market Study,” March 8, 2012, <http://www.transpowerusa.com/wordpress/wp-content/uploads/2012/06/ZETECH_Market_Study_FINAL_2012_03_08.pdf>, accessed on July 7, 2014.

27. (Hartzell, 2014) Dan Hartzell, The Morning Call, “LANTA steering more hybrid buses onto Valley roadways,” July 13, 2014, <http://articles.mcall.com/2014-07-13/news/mc-road-warrior-hybrid-20140713_1_hybrid-buses-lanta-bus-executive-director-armando-greco>, accessed on November 12, 2015.

28. (Hoyt, 2006) "FedEx and Environmental Defense: Building a Hybrid Delivery Fleet, Stanford Graduate School of Business," Case: SI-82, November 1, 2006, <https://faculty-gsb.stanford.edu/plambeck/PDF/FedEx_Environmental_Defense.pdf>.

29. (ICCT, 2012) The International Council on Clean Transportation, "ICCT's Certification Procedures for Advanced Technology Heavy-Duty Vehicles: Evaluating Test Methods and Opportunities for Global Alignment," February 2012, <http://www.theicct.org/sites/default/files/publications/ICCT_hybridHDVs_testprocedures_feb2012.pdf>.

30. (ICCT, 2013) The International Council on Clean Transportation, "ICCT's HDV efficiency: Aligning standards internationally, Part I: CO2 Emissions from Heavy Duty Vehicles Overview of VECTO's inputs," October 2013, <http://theicct.org/sites/default/files/HDV_presentation_Oct_2013_icct.pdf>.

31. (ICCT, 2015) The International Council on Clean Transportation, "Cost Effectiveness of Advanced Efficiency Technologies for Long-Haul Tractor-Trailers in the 2020-2030 Time Frame," April 2015.

32. (Kittelson et al., 2015) David Kittelson, et al., "On-Road Evaluation of Energy Flows and Emissions from New Technology Conventional and Hybrid Transit Buses," 25th CRC Real World Emissions Workshop, March 22-25, Long Beach, California.

33. (NRC, 2010) National Research Council, "Technologies and Approaches to Reducing the Fuel consumption of Medium- and Heavy-Duty Vehicles," Washington, D.C.: The National Academies press.

34. (NREL, 2012) K. Walkowicz, M. Lammert, and P. Curran, "Coca-Cola Refreshments Class 8 Diesel Electric Hybrid Tractor Evaluation: 13-Month Final Report," National Renewable Energy Laboratory, NREL/TP-5400-53502, August 2012.

35. (NREL, 2012a) M. Lammert and K. Walkowicz, "Eighteen-Month Final Evaluation of UPS Second Generation Diesel Hybrid-Electric Delivery Vans," National Renewable Energy Laboratory Technical Report, NREL/TP-5400-55658, September 2012.

36. (NREL, 2014) National Renewable Energy Laboratory, Presentation to CALSTART, February 26, 2014.

37. (NREL, 2015) National Renewable Energy Laboratory, “Data Collection, Testing, and Analysis of Hybrid Electric Trucks and Buses Operating in California Fleets, Final,” June 2015.

38. (NYT-VIP, 2014) New York Truck – Voucher Incentive Program Fact Sheet, <https://truck-vip.ny.gov/docs/NYT-VIPpercent20Factpercent20Sheet.pdf>.

39. (Odyne, 2014) Odyne, “Odyne Plug-in Hybrid Electric Vehicle (PHEV) Specifications,” <http://www.odyne.com/featuresspecs/specifications.html>, accessed on September 16, 2014.

40. (SAE, 2002) SAE J2711, “Recommended Practice for Measuring Fuel Economy and Emissions of Hybrid-Electric and Conventional Heavy-Duty Vehicles International,” September 2002, <http://standards.sae.org/j2711_200209/>.

41. (SCAQMD, 2014) South Coast Air Quality Management District, “SCAQMD’s Vehicle and Engine Upgrades,” <http://aqmd.gov/home/programs/business/business-detail?title=vehicle-engine-upgrades>.

42. (SJVAPCD, 2014) San Joaquin Valley Air Pollution Control District, “SJVAPCD’s Grants and Incentives,” <http://valleyair.org/grants/>.

43. (SMAQMD, 2014) Sacramento Metropolitan Air Quality Management District, “SMAQMD’S Hybrid Truck/School Bus Replacement Program for California,” <http://airquality.org/mobile/hybridtruck/index.shtml>.

44. (Siemens, 2014) Siemens, “Siemens tests eHighway system in California,” August 6, 2014, <http://www.siemens.com/press/en/pressrelease/?press=/en/pressrelease/2014/infrastructure-cities/mobility-logistics/icmol20140812.htm&content[]=ICMOL>, accessed on September 25, 2014.

45. (U.S. EIA, 2015) U.S. Energy Information Administration, “Alternative Fuel Vehicle Data,” <http://www.eia.gov/renewable/afv/supply.cfm?fs=a&sfueltype=dsl>, accessed on October 23, 2015.

46. (U.S. EPA, 2011) U.S. Environmental Protection Agency, “U.S. EPA’s Greenhouse Gas Emissions Model (GEM) User Guide,” August 2011, <http://www.epa.gov/otaq/climate/documents/420b11019.pdf>.

47. (U.S. EPA, 2011a) U.S. Environmental Protection Agency, "U.S. EPA's Final Rule: Greenhouse Gas Emissions Standards and Fuel Efficiency Standards for Medium- and Heavy-Duty Engines and Vehicles," September 2011, <http://www.gpo.gov/fdsys/pkg/FR-2011-09-15/pdf/2011-20740.pdf>.

48. (U.S. EPA, 2011b) U.S. Environmental Protection Agency, "U.S. EPA's Final Rulemaking to Establish Greenhouse Gas Emissions Standards and Fuel Efficiency Standards for Medium- and Heavy-Duty Engines and Vehicles, Regulatory Impact Analysis," August 2011, <http://www.epa.gov/otaq/climate/documents/420r11901.pdf>.

49. (U.S. EPA, 2014) U.S. Environmental Protection Agency, "U.S. EPA's Diesel Emissions Reduction Act (DERA)," <http://www.epa.gov/otaq/diesel/grantfund.htm#dera>.

50. (U.S. EPA, 2015) U.S. Environmental Protection Agency, "Hydraulic Hybrid Research," <http://www.epa.gov/otaq/technology/research/research-hhvs.htm>, accessed on May 12, 2015.

51. (UCS, 2014) Union of Concerned of Scientists, "How Hybrid Cars and Trucks Work," accessed August 29, 2014, <http://www.ucsusa.org/clean_vehicles/smart-transportation-solutions/advanced-vehicle-technologies/hybrid-cars/how-hybrids-work.html>.

52. (UNECE, 2011) United Nations Economic Commission for Europe, "Fifth Meeting of the GRPE Informal Group on Heavy-Duty Hybrids," Presentation by Cummins, March 2011, <http://www.unece.org/fileadmin/DAM/trans/doc/2011/wp29grpe/HDH-05-12e.pdf>.

53. (Zhao et al., 2013) Zhao H., Burke A., Miller M., "Analysis of Class 8 truck technologies for their fuel savings and economics," <http://www.fleetsandfuels.com/fuels/hybrids/2014/01/new-flyer-hybrids-for-sf-muni/>.

Appendices

Appendix A: Financial Incentives Programs
Appendix B: Testing and Certification Issues

Appendix A: Financial Incentives Programs

Federal, state, and local air districts' incentive programs described below are available to fund vehicles with hybrid technology. Some of the programs are not hybrid technology focused, but applicants may still be eligible, for example, by applying for funding for vehicle replacements.

I. U.S. Environmental Protection Agency's (EPA) Diesel Emissions Reduction Act (DERA)

Through the National Clean Diesel Campaign, U.S. EPA has funded approximately 60,000 pieces of clean diesel technologies including emissions and idle control devices, aerodynamic equipment, engine and vehicle replacements (e.g. from diesel to hybrid technology), and alternative fuel options. Regions, states, local agencies, and others can be eligible for the DERA funds and may use their allocations to fund emission reductions projects (U.S. EPA, 2014). Owners who are interested in these funds must apply to the agency who granted these funds as applicable. For more information, go to http://www.epa.gov/otaq/diesel/grantfund.htm#dera.

II. New York Truck Voucher Incentive Program (NYT-VIP)

In partnership with the New York State Energy Research and Development Authority (NYSERDA), New York State Department of Transportation (NYSDOT), New York City Department of Transportation (NYCDOT), and CALSTART, the NYT-VIP is a 'first come – first serve' incentive program to provide incentives for the purchase of alternative fuel vehicles and diesel emission control devices. The program contains three funds: New York (NY) State Electric Vehicle Voucher Incentive Fund (VIF), NY City Alternative Fuel Vehicle –VIF, and NY City Diesel Emission Reduction VIF. Vendors that market and sell these technologies are eligible for a voucher incentive to reduce the cost to the purchaser. Once the purchaser receives the new truck or diesel emission control devices, the vendor will be redeemed the full voucher amount. This program aims to promote and accelerate the integration of advanced vehicle technologies in New York. Currently, there are 19 issued vouchers for Hino hybrids with GVWR 19,000 pounds (lbs.) (NYT-VIP, 2014). For more information, go to https://truck-vip.ny.gov/.

III. Chicago's Drive Clean Truck – Voucher Program

One of the programs under Drive Clean Chicago is the Drive Clean Truck – Voucher Program that provides incentives to purchase zero and low emission vehicles. This program is now accepting voucher requests from vendors and dealers, on behalf of the purchasers of commercially available Class 2 – 8 All-Electric and Hybrid Trucks and Buses. They can apply incentives up to $150,000. For more information go to, http://www.drivecleanchicago.com/Default.aspx

IV. California Hybrid and Zero-Emission Truck and Bus Voucher Incentive Project (HVIP)

In California, a number of financial incentive programs require that heavy-duty hybrid vehicles be certified or be able to demonstrate emissions and/or fuel economy benefits over comparable conventional vehicles as one condition to be eligible for receiving grants. To be HVIP eligible, either the hybrid vehicle needs to be California Air Resources Board (ARB)-certified or if the vehicle is not ARB-certified it must demonstrate that the hybrid system is compatible with continued effective functioning of the vehicle exhaust after-treatment system. Additionally, the engine must have an Executive Order for the engine and associated hybrid system. The California Interim Certification Procedures for 2004 and Subsequent Model Hybrid-Electric and Other Hybrid Vehicles in the Urban Bus and Heavy-Duty Vehicle Classes were designed to allow a manufacturer to certify its heavy-duty hybrid vehicles, in order for the vehicle to be eligible for additional HVIP voucher amount. HVIP provides vouchers to help California fleets purchase or lease qualified hybrid or zero-emission trucks and buses. A hybrid vehicle above 14,000 lbs., which has been ARB-certified, is eligible for an additional $15,000 to $20,000 voucher amount since ARB-certified vehicles' criteria pollutant emission reductions have been verified, and these vehicles meet additional warranty and durability requirements. This additional voucher amount will be reflected in the voucher received by the dealer when the hybrid vehicle is ordered. If a vehicle becomes ARB-certified while the vehicle is on order, but before the vehicle has been purchased, that vehicle will be eligible to receive the additional voucher amount if HVIP funding is still available (ARB, 2014b). Table III-2 in the main report shows the vouchers issued through HVIP for hybrid vehicles. For more information, go to http://www.arb.ca.gov/msprog/aqip/hvip.htm.

V. ARB's Carl Moyer Memorial Air Quality Standards Attainment Program (CMP)

The Carl Moyer Program is a voluntary grant program that reduces air pollution from vehicles and equipment by providing incentive funds to private companies and public agencies to purchase cleaner-than-required engines, equipment, and emission reduction technologies. The program has been implemented since 1998 through a partnership between the ARB and California's 35 local air pollution control and air quality management districts. By funding emission reductions that are surplus -- earlier and/or beyond what is required by regulation -- the Carl Moyer Program complements California's regulations. Projects that reduce emissions from heavy-duty on-road and off-road equipment qualify for CMP grants. These projects go beyond regulatory requirements by replacing, repowering or retrofitting older, higher-emitting engines (ARB, 2013a). For more information, go to http://www.arb.ca.gov/msprog/moyer/moyer.htm.

VI. ARB's Truck Loan Assistance Program

The Truck Loan Assistance Program is a partnership between ARB and California Pollution Control Financing Authority (CPCFA). This program utilizes the Independent Contributor provisions of CPCFA's California Capital Access Program (CalCAP), which enable outside sources of funding (e.g., State or federal funds) to be used for loan assistance. ARB funds are used in CalCAP to enable lenders to improve their ability to provide financing to small businesses to assist them in growing or maintaining their business. Loans in the program can be used to finance heavy-duty trucks and buses (over 14,000 lbs. gross vehicle weight rating (GVWR)) equipped with engines certified to specified engine emission standards for 2007 and newer model year (MY) engines, and diesel exhaust retrofits. For more information, go to http://www.arb.ca.gov/ba/loan/on-road/on-road.htm.

VII. Proposition 1B Goods Movement Emission Reduction Program

Proposition 1B, approved by voters in 2006, authorizes $1 billion in bond funding to ARB to cut freight emissions along California's four priority trade corridors. The Program is a partnership between ARB and local agencies (such as air districts) to quickly reduce air pollution emissions and health risk from freight transport. ARB awards Program funds to local agencies; those agencies then use a competitive process to provide incentives to equipment owners to upgrade to cleaner technology. The funds provide an incentive to equipment owners to upgrade to cleaner equipment

and achieve early or extra emission reductions beyond those required by applicable regulations or enforceable agreements. The Program supplements regulatory actions and other incentives to cut diesel emissions by funding projects "not otherwise required by law or regulation."

The major sources eligible for funding include heavy-duty diesel trucks, freight locomotives, ships at berth, commercial harbor craft, cargo handling equipment, and infrastructure for electrification of truck stops, distribution centers and other places trucks congregate. The Proposition 1B Program Guidelines are updated periodically to reflect the requirements of existing and new regulations and their compliance deadlines. The current Guidelines update, scheduled for consideration by ARB in June 2015, continues the transition to advanced technologies by proposing to provide higher funding levels for zero and near-zero emission technologies. The latest staff concepts include heavy-duty hybrids as a specific funding category, with additional per truck funding proposed for heavy-duty hybrids with zero-emission mile capability (ARB, 2015b).

VIII. Incentives available at local air districts

Local air pollution control and air quality management districts have limited funding specifically for heavy-duty hybrid vehicles. The incentive programs currently offered under which heavy-duty hybrid vehicles could be eligible would be through Air District's CMP and Voucher Incentive Program (VIP), which is part of the CMP.

- Bay Area Air Quality Management District (BAAQMD) is accepting applications for CMP and VIP for on-road heavy-duty vehicles with a GVWR of greater than 14,000 lbs. The CMP is a state-funded program that offers grants to owners of heavy-duty vehicles and equipment to reduce diesel-related emissions from heavy-duty engines. VIP grants are currently available for fleets of 3 or fewer vehicles to help vehicle owners replace their 2006 or older heavy-duty diesel vehicles. The replacement vehicle must be a new or used 2007 or newer MY vehicle with an engine certified to 2007 emission standards or cleaner. Eligible projects could receive up to $45,000 towards the purchase of a new vehicle. VIP funded grant projects must operate within California 75 percent of the time (BAAQMD, 2014). For more information, go to http://www.baaqmd.gov/Divisions/Strategic-Incentives/Funding-Sources/Carl-Moyer-Program.aspx for CMP and http://www.baaqmd.gov/Divisions/Strategic-Incentives/On-Road-Vehicles/Voucher-Incentive-Program.aspx for VIP.

- Sacramento Metropolitan Air Quality Management District (SMAQMD) provides funding to offset the incremental cost of purchasing low or zero emission technologies and promotes early introduction of low or zero emission technologies.

SMAQMD, in partnership with U.S. EPA, provides grants to offset the incremental cost to replace old diesel trucks and school buses with new medium-duty and heavy-duty hybrid trucks and school buses. The SMAQMD Hybrid Truck and School Bus Replacement Program offers grant funding for the replacement of existing fleet vehicles with new, commercially available, ARB-certified hybrid heavy-duty vehicles that meet the following requirements:

- Existing Vehicle To Be Replaced:
    1. must have a manufacturer's GVWR greater than 14,000 lbs.
    2. must have a pre-2007 engine
    3. proof of continuous ownership & operation for previous 24 months
    4. must be surrendered to a SMAQMD-approved dismantler once the replacement truck is delivered

- New Hybrid Vehicle Requirements:
    1. must have a manufacturer's GVWR greater than 14,000 lbs.
    2. must be ARB-certified through the HVIP
    3. must operate 100percent in California, however, fleet may request outside California operation for emergency services
    4. If the vehicle receives a voucher through the HVIP Program, all HVIP requirements must also be met.

This program will offset up to $45,000 of the incremental cost of hybrid vehicle. The participant is required to operate the replacement hybrid vehicle within the State of California for five years. These funds may be combined the ARB's HVIP as long as the combined funds do not exceed the incremental cost of the hybrid vehicle (SMAQMD, 2014). For more information, go to http://airquality.org/mobile/hybridtruck/index.shtml.

Another program is the VIP, application period is now closed. An update on this link http://airquality.org/mobile/moyeronroadvip/index.shtml will be provided for the availability of future funding.

- The San Joaquin Valley Air Pollution Control District (SJVAPCD) HVIP "Plus-Up" Program is designed to offer additional incentive funding to fleets that are purchasing hybrid or zero emission trucks and buses through ARB's HVIP. Fleets that are operating in the San Joaquin Valley can get up to $30,000 per vehicle in additional voucher funds on top of the HVIP funds by participating in the SJVAPCD's HVIP "Plus-up" Program (SJVAPCD, 2014). For more information, go to http://valleyair.org/grants/hybridvoucher.htm.

Another program is the Truck Voucher Program that allows participants to apply through SJVAPCD-certified dealerships to replace old, high-polluting, heavy-duty diesel trucks. Applications are only available at a SJVAPCD certified dealerships and are accepted on a continual basis until funding is exhausted. Any truck purchased before receiving a voucher is ineligible for funding. Eligibility of pre-1996 MY engines are limited due to fast approaching compliance dates. All pre-1996 engines will be evaluated on a case-by case basis (SJVAPCD, 2014). For more information, go to http://valleyair.org/grants/truckvoucher.htm.

- The South Coast Air Quality Management District (SCAQMD) VIP is a streamlined approach to reduce emissions by replacing old, high-polluting vehicles with newer, lower-emission vehicles, or by installing a retrofit device (SCAQMD, 2014). This program is limited to owners/operators with fleets of 3 or fewer vehicles that have been operating at least 75 percent (mileage-based) in California during the previous 24 months. The goal of this program is to reduce emissions from in-use heavy-duty trucks in small fleets by retrofitting engine MYs 1997 to 2006 or by replacing engine MYs 2006 and older with MYs 2007 (or newer) emissions compliant models. The VIP is implemented through contractual agreements with dealers, dismantlers, and retrofit installers. The dealers/retrofit installers apply to the SCAQMD for the vouchers on behalf of the applicant. If approved, the voucher amount will be deducted from the total purchase price of the truck or retrofit device by the dealer or retrofit installer, respectively. Applicants interested in replacing their truck must purchase their replacement truck through an SCAQMD-approved VIP Participating Dealership that has completed the required training for the VIP (SCAQMD, 2014). For more information, go to http://aqmd.gov/home/programs/business/business-detail?title=voucher-incentive-program&parent=vehicle-engine-upgrades.

Appendix B: Testing and Certification Issues

This appendix provides an overview of hybrid vehicle certification requirements, test methods, and warranty requirements.

A. Overview of hybrid vehicle certification requirements

1. ARB certification

Heavy-duty hybrid vehicles are currently not required to be certified for emissions compliance, although the engines that are used in these vehicles have to be certified. ARB already has in place voluntary certification procedures for heavy-duty hybrid vehicles, which were adopted in 2002, and subsequently amended in 2013, and which were used by several hybrid manufacturers to certify nine heavy-duty hybrid vehicles from 2009 to 2012. However, currently, no heavy-duty hybrid vehicles offered for sale is certified for emissions compliance using ARB's amended voluntary interim certification procedures.

ARB's Interim Procedures were developed to compare emission performance of conventional and hybrid vehicles. The conventional engine that is used in the hybrid vehicle must be a California-certified engine. The ARB certification value for a heavy-duty hybrid-electric vehicle is determined through calculations using chassis dynamometer test results and engine certification values for both the hybrid-electric vehicle and a comparable conventional vehicle. Once certification is obtained, an Executive Order is issued to the entity that applied for certification and is responsible for complying with emissions and other requirements (ARB, 2013). Since 2009, only nine heavy-duty hybrid vehicles have been certified through the Interim Procedures.

Staff amended the Interim Procedures in 2013 to reflect the expanding commercialization and advancement of hybrid technology into more sectors of the heavy-duty market and the need to better quantify emission reductions from existing and future heavy-duty hybrid vehicles. The amendments will help ensure that the test procedures are applicable to a wider range of vehicle classes and vocations, and will clarify and enhance certification requirements to match current international recommended practices for measuring fuel economy and emissions. Chassis dynamometer testing is still required for this voluntary certification.

Currently, ARB is working jointly with U.S. EPA and the National Highway Traffic Safety Administration (NHTSA) on Heavy-Duty Greenhouse Gas (GHG) Standards for New Vehicle and Engines (Phase 2), and U.S. EPA is on schedule to adopt Phase 2 of its heavy-duty GHG program by 2016. It is likely, therefore, that these amended procedures will need to be revisited and, possibly, revised, as part of ARB's consideration of the Phase 2 standards, which are discussed further below.

a. On-Board Diagnostics (OBD)

The heavy-duty OBD regulation, first adopted in 2005 and phase-in started in 2010 MY, requires the monitoring of hybrid components through the use of an on-board computer(s). The OBD system is required to monitor emission systems in-use for the actual life of the engine and be capable of detecting malfunctions of the monitored emission systems, illuminating a malfunction indicator light (MIL) to notify the vehicle operator of detected malfunctions, and storing fault codes identifying the detected malfunctions. The use and operation of OBD systems will ensure reductions in in-use motor vehicle and motor vehicle engine emissions through improvements of emission system durability and performance. One of the most important elements of the OBD system is that it requires comprehensive monitoring of all electronic powertrain components or systems that either can affect emissions or are used as part of the OBD diagnostic strategy for another monitored component or system.

OBD requirements for heavy-duty diesel hybrids certified for sale in California started in the 2014 MY. This requirement took effect to integrate single OBD system that covers the engine and hybrid powertrain. Manufacturers are required to apply for certification per the requirements set forth in California Code of Regulations (CCR), Title 13, Sections 1971.1 and 1971.5. The application for certification shall identify and describe the certified base engine, the hybrid system mated to it, all changes made to the certified engine along with the rationale describing the need for each change, and the vehicle applications into which the hybrid system will be installed.

For alternate-fueled engines, engine using a fuel different from or in addition to gasoline fuel or diesel fuel (e.g., compressed natural gas (CNG), liquefied petroleum gas), the implementation of OBD system meeting the requirements set forth in section 1971.1 begins with 2018 MY. The manufacturer shall submit a plan to the Executive Officer for approval of the monitoring requirements determined by the manufacturer to be applicable to the engine. Executive Officer approval shall be based on the appropriateness of the monitoring plan with respect to the components and systems on

the engine (e.g., a spark-ignited dedicated CNG engine with a particulate matter (PM) filter and a selective catalytic reduction (SCR) system would be monitored in accordance with the misfire monitoring requirements for spark-ignited engines and with the PM filter and SCR system monitoring requirements for diesel engines typically equipped with the same components). For 2013 through 2017 MY engines, the manufacturer is required to implement an Engine Manufacturer Diagnostic (EMD) system meeting the requirements in section 1971 and monitor the NOx aftertreatment (i.e., catalyst and adsorber) on engines so-equipped (CCR, 2013).

Hino Motors is a hybrid vertically integrated manufacturer that is OBD certified in accordance with section 1971.1 for MYs 2013 & 2014 diesel engine. Allison Transmissions and BAE Systems have recently obtained OBD certification for their hybrid systems for MYs 2014 (Allison) & 2015 (Allison, BAE). OBD requirements are another factor why there were only few ARB certified hybrid vehicles.

b. Availability of certified vehicles

Only few heavy-duty hybrid vehicles have completed ARB certification, due to various factors. For 2010 through 2014 MYs, most of the certified heavy-duty hybrid vehicles are urban buses from variety of manufacturers (e.g., Capstone Turbine Corporation, Cummins Engine Co., Inc., and ISE Corporation); Hino Motor, Ltd. is certified for Light Heavy-Duty Diesel class for MYs 2013 and 2014 hybrid diesel engine. Allison Transmissions and BAE Systems have recently obtained OBD certification for their hybrid systems for urban buses.

2. U.S. EPA certification

The U.S. EPA does not have certification requirements for heavy-duty hybrid vehicles, although the federal Phase 1 greenhouse gas standards provided advanced technology credits for carbon dioxide (CO2) emissions from hybrid vehicles. The Society of Automotive Engineers has a published its “Recommended Practice” for testing heavy-duty hybrid vehicles for emission and fuel economy (SAE J2711). There is a general recognition that uniform and cohesive certification procedures for heavy-duty hybrid vehicles need to be available and to be mandatory for hybrid vehicles to ensure the emissions reduction and fuel economy benefits are verified through standardized testing procedures. Recognizing this need, the 21st Century Partnership recommends that EPA and the Department of Transportation’s (DOT) - NHTSA work with ARB to “develop test

procedures for the certification process of criteria emissions so that the emissions benefits of hybridization will be recognized" (21st CTP, 2012).

a. Phase 1

In 2011, the U.S. EPA and the NHTSA jointly adopted the Phase 1 rule (U.S. EPA, 2011a). The rule which phases in between MYs 2014 and 2019, establishes the first ever national GHG emission standards for medium- and heavy-duty engines and vehicles with GVWR over 8,500 lbs. The vehicle standards are established in three regulatory categories-Class 7 and 8 combination tractors, Class 2b to 8 vocational vehicles, and Class 2b and 3 HD pickups and vans. There are separate standards for compression-ignition (CI) versus spark-ignition (SI) engines.

This rule uses Greenhouse Gas Emissions Model (GEM) to determine its compliance. Unfortunately, GEM, considered a simple model, cannot verify advanced control systems and powertrain configurations (e.g. hybrid). Instead, U.S. EPA has provided regulated entities with a variety of compliance methods and credit opportunities, including an alternative compliance path that starts in 2013, an opportunity to average, bank, and trade credits, as well as recognition of advanced technologies and early credits. Hybrid powertrain designs that include energy storage systems are eligible for advanced technology credits. For heavy-duty pickup and van hybrids, the testing would be done using adjustments to the test procedures developed for light-duty hybrids. For vocational vehicles or combination tractors incorporating hybrid powertrains, there are two methods for establishing the number of credits generated—chassis dynamometer and engine dynamometer testing:

- Chassis Dynamometer Evaluation
  Using chassis testing is as an effective way to compare the CO2 emissions and fuel consumption performance of conventional and hybrid vehicles. The heavy-duty hybrid vehicles is certified using ''A to B'' vehicle chassis dynamometer testing. This concept allows a hybrid vocational vehicle manufacturer to directly quantify the benefit associated with use of its hybrid system on an application-specific basis.
- Engine Dynamometer Evaluation - Powerpack Testing
  The engine test procedure for hybrid evaluation involved the conventional engine and hybrid system based on an engine testing strategy that represents the real world functionality. Powerpack testing includes the engine, complete hybrid system (including motor, power electronics, batteries, electronic control system, etc.), and the transmission.

In December 2013, ARB adopts U.S. Phase 1 standards for MY 2014 and later medium- and heavy-duty engines and vehicles to enable California with the ability to certify vehicles and engines under the Phase 1 standards, and allow ARB to enforce the requirements. ARB is maintaining the same compliance flexibility as in the federal program to minimize manufacturers' compliance burden. Thus, this adoption demonstrates harmonization with U.S. EPA standard and allows common compliance strategies.

Currently, ARB is working jointly with U.S.EPA and the NHTSA on the Phase 2 standards, discussed further below.

b. Phase 2

The development of the next phase Heavy-Duty GHG Standards for New Vehicle and Engines (Phase 2 rule) is to further reduce fuel consumption through the application of advanced cost-effective technologies and continue efforts to improve the efficiency of moving goods across the United States. This second round of fuel efficiency standards will build on the first-ever national GHG emission standards for medium- and heavy-duty vehicles. While the Phase 1 standards were based on the application of currently available off-the-shelf technologies, Phase 2 is expected to set standards that are more technology forcing. In developing the standards, the agencies will assess advanced technologies that may not currently be in production for heavy-duty Class 7 and 8 tractors, Class 2b to 8 vocational vehicles, Class 2b and 3 pickups and vans, and some types of trailers (not part of Phase 1), and will consider and evaluate, for example engine and powertrain efficiency improvements such as aerodynamics, weight reduction, improved tire rolling resistance, hybridization, automatic engine shutdown, and accessory improvements (water pumps, fans, auxiliary power units, air conditioning, etc.) Additionally, there are other items that need to be evaluated such as powertrain test procedures, engine certification, and GEM. The GEM will be enhanced and validated.

The agencies issued a Notice of Proposed Rulemaking (NPRM) in June 2015. Upon U.S. EPA adoption of Phase 2, ARB staff will bring a proposed California Phase 2 program before the Board in late 2016 or 2017.

B. Testing

1. Current test methods for heavy-duty hybrids

Conventional heavy-duty engines are certified on an engine dynamometer. Heavy-duty hybrid vehicles are typically manufactured by coupling a conventional engine with a hybrid-drive system. For most heavy-duty hybrid vehicles, the manufacturers of the conventional engine and the hybrid drive system are separate entities; one exception is a Hino, which is a California-certified vertically-integrated heavy-duty hybrid vehicle where both the engine and the hybrid-drive system were designed and manufactured as an integrated unit by Hino (ARB, 2013).

a. Chassis Dynamometer

The full vehicle is mounted on a dynamometer with the drive wheels resting on one or more large cylindrical metal rollers. The vehicle is stationary during testing, but the drive wheels spin the rolls to simulate different driving speeds that are experienced in real world operation or on the road. The dynamometer imparts varying loads to represent varying vehicle inertia and vehicle road load, rolling resistance, and aerodynamic drag throughout the drive cycle. The vehicle driver follows a specific profile (e.g. speed versus time). The chassis dyno testing enables comparisons between different vehicles and has repeatable emissions and energy consumption data (ICCT, 2012). In 2002, the Society of Automotive Engineers (SAE) developed a recommended practice for conducting emissions and fuel economy tests of heavy-duty vehicles on chassis dynamometers (SAE J2711), described further below. At the same time, ARB adopted “California Interim Certification Procedures for 2004 and Subsequent Model Hybrid-Electric Vehicles in the Urban Bus and Heavy-Duty Vehicle Classes” (ARB, 2014a). The Interim Procedures were designed for heavy-duty hybrid-electric vehicle manufacturers seeking voluntary vehicle-based (as opposed to engine-based) certification using chassis dynamometer. One issue related to using chassis dynamometer for testing is its limited availability due to high capital costs.

b. SAE J2711

Around 2002, the SAE’s Truck and Bus Hybrid and Electric Vehicle Committee and the Northeast Advanced Vehicle Consortium (NAVC) Hybrid Transit Bus Certification Workgroup worked together on development of a heavy-duty hybrid electric vehicle (HEV) chassis testing procedure, based on SAE J1711, the light duty HEV chassis procedure.

The SAE Recommended Practice J2711 was developed as a starting point to provide standard procedure for simulating use of heavy-duty HEVs and conventional vehicles on chassis dynamometers to measure emissions and fuel economy. The recommended practice was developed specifically for HEVs but can also be applied to test other heavy- duty vehicles. The recommended practice defines a hybrid vehicle as having both a rechargeable energy storage system (RESS) capable of releasing and capturing energy and an energy-generating device that converts consumable fuels into propulsion energy. RESS specifically includes batteries, capacitors and flywheels. It provides a detailed description of state of charge (SOC) correction for charge-sustaining HEVs. It also provides recommendations for calculating fuel economy and emissions for charge-depleting hybrid electric vehicles (SAE, 2002). The SAE J2711 procedure is currently a work in progress as hybrid-electric systems are evolving and other types of test methods are being evaluated.

2. Future test methods

Heavy-duty vehicle efficiency certification test procedures are being evaluated by various stakeholders (e.g., federal and state agencies, environmental committees or nonprofit organizations) to shift from costly laboratory testing to a more flexible combination of component testing and simulation. The robustness of these test methods is highly dependent upon the accuracy of the simulated components (battery, transmission, motor/generator, etc.) and the complexity of the model to be able to calculate accurate results. During the evaluation and development phase, there are number of important challenges that need to be addressed. First, there needs to be a determination of the appropriate level of detail for their models. In addition, there is a need to decide how to standardize simulation procedures (e.g., driver models), and to develop new component testing protocols (e.g., engine map development or air drag coefficient determination) and data reporting procedures to feed the simulation models. There is also the need to decide on how to handle the information that is required for the performance of simulations, balancing the need for transparency with the protection of commercial interests. Finally, there is a need to create a test method applicable for both criteria pollutants and GHG emissions (i.e., to avoid backsliding). Several potential methods, including powerpack and other methods, are discussed below.

a. Powerpack

The powerpack in a certification test cell could include just an engine, or engine plus transmission, or complete hybrid powertrain depending on the vehicle configuration and degree of control integration between the engine and other components. The vehicle

would be presented by a model in the dynamometer controls. The powerpack approach would probably require upgrades to engine certification test cells, or construction of all-new powerpack test cells (depending on the configuration and state of the existing cells). However, it is still could be more manageable and less costly than building new chassis dynamometer facilities for medium- and heavy-duty trucks. Figure B-1 shows a schematic of powerpack hybrid test method options.

Figure B- 1: Powerpack Hybrid Test Method Options

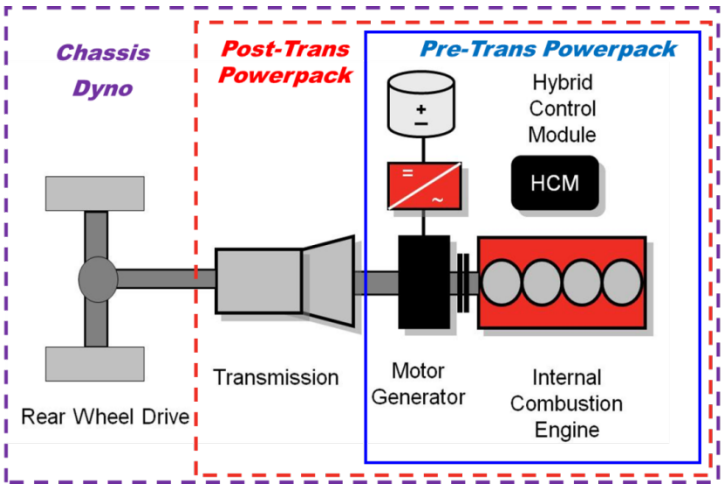

(UNECE, 2011)

i. Pre-Transmission Powerpack Vehicle Simulation

The pre-transmission powerpack evaluation incorporates all of the hybrid system components that exist prior to the transmission in the vehicle. The control volume is drawn so as to include the battery, battery support and control systems, power electronics, the criteria pollution certified engine, and motor generator and hybrid control module. The performance of this system is an engine-based evaluation in which emission rates are determined on a brake-specific work basis (U.S. EPA 2011b). Testing using this method could utilize existing engine certification duty cycles. Details related to pre-transmission hybrid test procedures are described in 40 CFR 1036.525.

ii. Post-Transmission Powerpack Vehicle Simulation

For post-transmission powerpack testing to determine hybrid benefit, the components mentioned for powerpack testing would be included for powertrain testing, as well as the transmission integrated with the hybrid power system. It is expected that testing could be conducted in a powertrain test cell (very few in existence) which would differ from the traditional engine test cell in that it would need to accommodate the additional rotational inertia and speeds associated with inclusion of the vehicle/hybrid transmission with an electric, alternating current dynamometer. Additionally, test cell control systems would need to address all relevant control factors including ways to integrate vehicle command data into the control strategy for the engine and hybrid transmission system. A vehicle-like duty cycle which provides the appropriate speeds and torques to more appropriately match field operation would be needed. This could eventually include the need for vehicle and driver model inclusions into the control schema for the test cell and the test article. Details for post-transmission powerpack testing are available in 40 CFR 1037.550 (U.S. EPA, 2011b).

b. Other test methods

i. U.S. EPA's GEM

The GEM was created by U.S. EPA as a means for determining compliance with U.S. EPA's GHG emissions and the NHTSA's fuel consumption vehicle standards, for Class 7 and 8 combination tractors and Class 2b-8 vocational vehicles (U.S. EPA, 2011). The GEM is a part of the Heavy-Duty GHG Standards for New Vehicle and Engines (Phase 1) rule and will also be used in Phase 2. GEM is a free, desktop computer application that is designed to operate on a single computer. It consists of a graphical user interface (GUI) written in MATLAB/Simulink. There are only a limited number of user input parameters; the model uses its default parameters to run. The first option to run GEM is using single configuration, and the second option is to allow the user to run multiple configurations or a batch job under the same regulatory subcategory and vehicle MY (U.S. EPA, 2011). For every simulation run, GEM runs the three built-in time-based driving cycles (ARB transient cycle, 55 and 65 mph steady state cruise cycles) and applies different weightings to the results depending on vehicle category to produce a single efficiency value (e.g., for Class 8 sleeper-cab tractors, the weights are 5 percent for ARB transient cycle, 9 percent for 55mph cruise, and 86 percent for

65mph cruise). The GEM results are in g CO2/ton-mile and gal/1000 ton-mile. Figure B-2 shows a screen shot of the GEM Input GUI.

Figure B- 2: GEM Input GUI

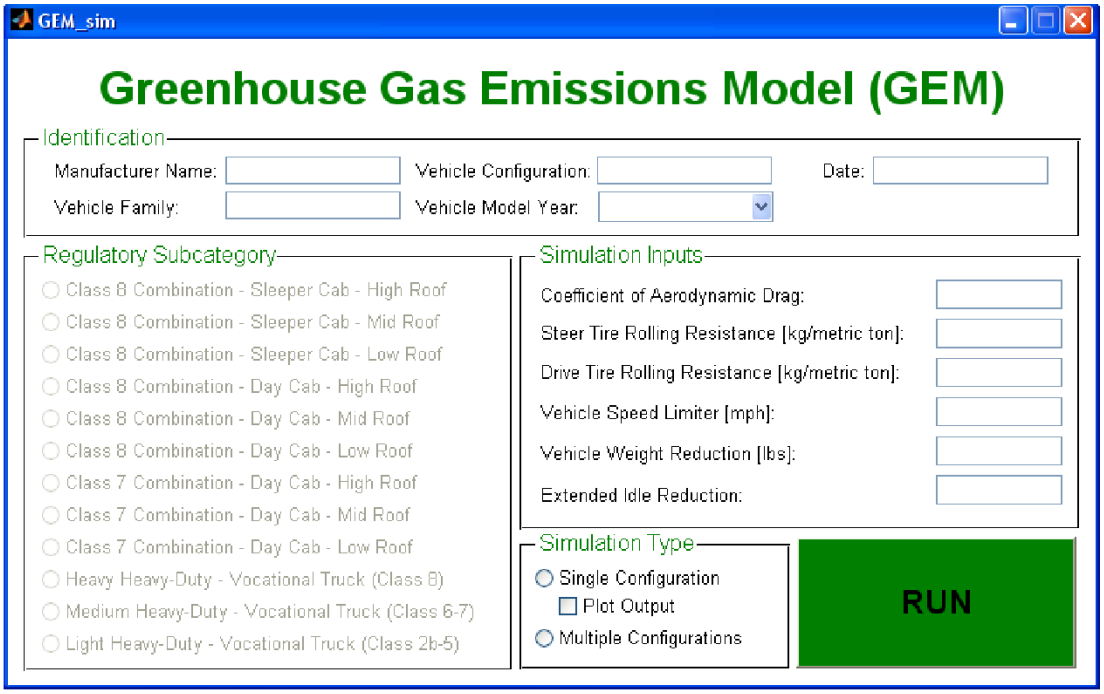

(U.S. EPA, 2011)

ii. Hardware-in-the-Loop Cycle Simulation and Engine Testing

The Working Party on Pollution and Energy (GRPE) is an entity of the United Nations Economic Commission for Europe (UNECE). The GRPE is a subsidiary body of the World Forum for Harmonization of Vehicle Regulations (WP.29). The GRPE comprised of over 120 experts who conduct research and analysis to develop emission and energy requirements for vehicles. The GRPE is in the process of drafting an amendment to Global Technical Regulation No. 4, which established a harmonized type-approval procedure for heavy-duty engine exhaust emissions. The amendment will provide a test procedure and harmonized technical requirements for certifying pollutant emissions and CO2 from heavy-duty hybrid vehicles. The proposed method for certifying hybrid vehicles is similar to the Japanese approach. The method will start with a simulation model tailored to the specific hybrid system. This model will then be exercised over a

speed-time vehicle cycle (WTVC) to determine how the engine would need to operate (speed/load) to propel a vehicle over that cycle. In effect, the simulation model will determine a unique engine cycle for that hybrid system. The actual engine will then be tested on an engine dynamometer, using that unique cycle, to determine fuel use and emissions (ICCT, 2012). The quality of the input data is important to the accuracy of the fuel use and emissions results. The GRPE aims to have the test procedure finalized and adopted by 2015.

iii. Vehicle Energy Consumption calculation Tool (VECTO)

Vehicle Energy Consumption Calculation Tool (VECTO) is a software tool created to measure fuel consumption and CO2 emissions through simulation of heavy-duty vehicles. It is still in the 'trail' phase and has similar purposes as GEM. Unlike GEM, a forward simulation, this tool is backward simulation (e.g. the vehicle speed as defined in the target speed cycles is given as input for the simulation of engine power and engine speed.) It is written in Visual Basic.NET, a multi-paradigm, high level programming language from Microsoft. Figure B-3 shows a screen shot of the VECTO data input.

Figure B- 3: VECTO Data Input

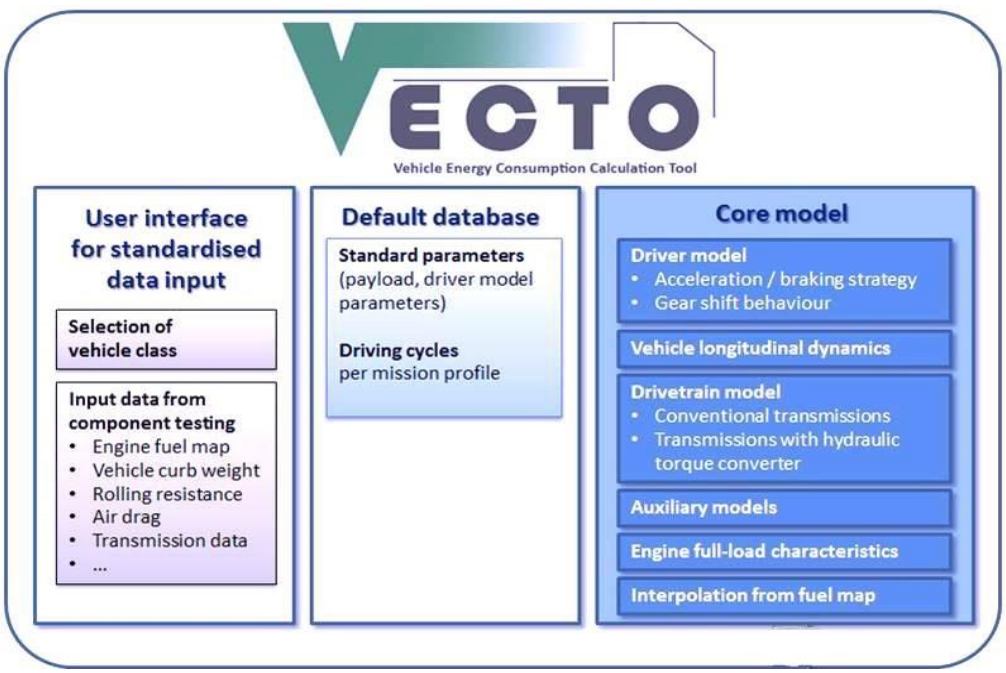

(ICCT, 2013)

C. Warranty and Useful Life Issues

All heavy-duty engines that are certified for sale in California have to comply with a number of requirements, among them warranty and useful life requirements. An entity that has applied for and received an Executive Order for the certification for their engine is the entity that is responsible for complying with applicable useful life and warranty requirements.

1. Useful life and Engine Downsizing

ARB existing regulations provide for different useful life periods based on the intended service class of the engine. For heavy-duty engines, there are three main truck service classes, each having a different useful life. Table B-1 lists the intended vehicle service class and useful life requirements.

Table B- 1: Heavy-Duty Diesel Engines Intended Service Class and Useful Life Requirements

Intended Service Class (Heavy-Duty Diesel Engines)	Useful Life (Miles)
Light Heavy-Duty (14,000 lbs.<GVWR<19,500 lbs.)	110,000
Medium Heavy-Duty(14,000 lbs.<GVWR<+33,000 lbs.)	185,000
Heavy Heavy-duty (>33,000 lbs. GVWR)	435,000

As can be seen from Table B-1, there are significant differences in the useful life requirements between the different service classes. The difference in useful life is most pronounced between the heavy heavy-duty service class (435,000 miles) and the medium heavy-duty service class (185,000 miles). This is one of the central issues surrounding engine downsizing for heavy-duty hybrid vehicles. A purchaser of a heavy-duty engine expects to receive a certain amount of life from their engines, which they would get if the engine of the correct service class is installed in the vehicle. In a hybrid vehicle, because of the added tractive power that is available from the electric motor, the power requirement from the diesel engine is therefore reduced. A number of hybrid manufacturers have argued that because of that, ARB should allow the use of a smaller engine such as a medium heavy-duty engine in a heavier service class in order to allow the hybrid powertrain to be optimized for fuel economy and performance. ARB recognizes the unique issues associated with the incorporation of a hybrid drivetrain on a heavy-duty vehicle and sees the potential for overall vehicle efficiency. However, the current useful life presents a significant issue to consider. A medium heavy-duty engine is only certified to 185,000 mile useful life, and if it’s installed in a heavy heavy-duty

service class, where the certification requires a much longer useful life of 435,000 miles, how would the discrepancy in useful life be addressed in case of emissions failures? The engine OEM, who designed the medium heavy duty engine to comply with the 185,000 miles, will not take up the liability associated with the 435,000 miles useful life. The hybrid drivetrain manufacturer will not assume that liability either since they are not the manufacturer of the engine. This is an important issue that needs to be addressed if downsized engines are allowed to be certified for use in a heavy heavy-duty hybrid application in order to reap full potential fuel economy and emission reduction benefits of hybrids.

2. Warranty

Warranty requirements for heavy-duty engines apply to the proper functioning and performance of emission-related components over the warranty period of 100,000 miles. In case of a conventional vehicle, there is only one powertrain and the responsibility for fulfilling warranty requirements rests with the one entity whose name is shown on the Executive Order. In case of a heavy-duty hybrid vehicle, there are two sets of motive tractive sources, one hybrid and one diesel, that are manufactured by two different entities. No one entity has been willing to be the sole holder of the Executive Order for certification to assume the warranty responsibility for the entire vehicle. Thus far, ARB has addressed this concern through the use of a Dual Executive Order process, where each certifying party is required to submit their own data and is held liable for their own system. Alternate approaches to address this concern may be possible and ARB is willing to entertain discussions with OEMs to enable heavy-duty hybrid vehicles to be certified while ensuring that certification requirements pertaining to warranty and useful life are met.