California Environmental Protection Agency

Air Resources Board

STAFF REPORT:

INITIAL STATEMENT OF REASONS FOR PROPOSED AMENDMENTS TO THE LIST OF EQUIPMENT DEFECTS THAT SUBSTANTIALLY IMPAIR THE EFFECTIVENESS OF GASOLINE VAPOR RECOVERY SYSTEMS

Date of Release: July 7, 2007
Scheduled for Consideration: August 22, 2007

Location:
1001 I Street
Sacramento, California

Air Resources Board
P. O. Box 2815
Sacramento, California 95812

The staff of the California Air Resources Board has prepared this report. Publication does not signify that the contents reflect the views and policies of the Air Resources Board, nor does mention of trade names or commercial products constitute endorsement or recommendation for use.

this page intentionally left blank

Acknowledgments

ARB staff extends their appreciation to the members of CAPCOA Vapor Recovery Committee for providing multiple suggestions on improvements to the vapor recovery program as well as technical assistance. We thank all the air pollution control districts who provided their input to the Vapor Recovery Equipment Defects List Update. We appreciate the expertise shared by Reza Mahdavi of ARB's Economic Studies Section.

This report and proposed amendments to the Vapor Recovery Equipment Defects List incorporated by reference into the California Code of Regulations, section 94006 were developed by the following Air Resources Board Staff:

Ranjit Bhullar, Section Manager
R. Neil Nipper, Lead Staff
Kathryn Gugeler

Air Resources Board
P.O. Box 2815
Sacramento, CA 95812

this page intentionally left blank

Initial Statement of Reasons for Proposed Amendments to the List of Equipment Defects That Substantially Impair the Effectiveness of Gasoline Vapor Recovery Systems

Table of Contents

Executive Summary 1

1. Introduction 3
   1.1 Overview 3
   1.2. History 3

2. Background 3
   2.1 Legal Authority 4
   2.2 Regulatory History 4
      2.2.1 Phase I Vapor Recovery 5
      2.2.2 Phase II Vapor Recovery 5
   2.3 Public Process 6
      2.3.1 Public Workshop 6
      2.3.2 CAPCOA/District Meetings 7
      2.3.3 Internet Availability 7

3. Need for Emission Control 7
   3.1 Background 7
   3.2 Impact on the State Implementation Plan for Ozone 8
      3.2.1 SIP History 8
      3.2.2 SIP Lawsuit Settlement 8
      3.2.3 Impacts of Proposed Amendments 9

4 Summary of Proposal 9
   4.1 Introduction 9
   4.2 Proposed Changes 9
      4.2.1 Removal of E.O.s 9
      4.2.2 Identification of Aboveground Storage Tank (AST) Systems . 10
      4.2.3 Defects for New E.O.s 10
      4.2.4 New Defect Identification 10

5. Environmental Impacts 10
   5.1 Summary of Environmental Impacts 10
   5.2 Legal Requirements for Assessing the Environmental Impacts 11
   5.3 Potential Environmental Impacts 11
      5.3.1 Impact on Ground-Level Ozone and Water Quality 11
      5.3.2 Impact on Global Warming and Stratospheric Ozone Depletion 11
      5.3.3 Impact on Particulate Matter (Aerosols) 11
      5.3.4 Impact on Toxic Air Contaminants 12

Table of Contents (continued)

5.3.5 Impact on Solid Waste Disposal 12
5.4 Mitigation Measures 12

6. Economic Impacts 12
6.1 Background 12
6.2 Potential Impact on Business 13
6.3 Cost to State and Local Government 13

7. Evaluation of Alternatives 13

8. Future Activities 14
8.1 AB1164 Requirements 14
8.2 Decertification of Pre-EVR Systems 14
8.3 EVR Executive Orders with Defects Listed 14

9 Conclusion 15

Appendices

Appendix 1: California Code of Regulations, Title 17, Section 94006
Appendix 2: Proposed Amendments to the Vapor Recovery Equipment Defects List
Appendix 3: California Health and Safety Code, Section 41960.2

Executive Summary

The Air Resources Board (ARB or Board) is proposing amendments to the Vapor Recovery Equipment Defects (VRED) List incorporated by reference in section 94006(b) title 17, California Code of Regulations (CCR). The Executive Officer of ARB is required to identify and list those defects in the equipment that substantially impair the effectiveness of the vapor recovery system to collect vehicle gasoline refueling emissions (Health and Safety Code (HSC) section 41960.2(c)).

The Executive Officer has identified and listed the substantially impairing defects in the VRED List incorporated by reference in section 94006(b), title 17 CCR. The regulation (section 94006(a), title 17, CCR) requires any defect that meets the following criteria to be considered substantial:

1. The defect did not exist when the system was certified;
2. The excess emissions associated with the defect have the potential to degrade fueling point or system efficiency by at least five percent; and
3. A field verification procedure exists to identify the defect.

In the VRED List, the Executive Officer has identified conditions in vapor recovery equipment components which are not present during normal operation of vapor recovery systems, allow excess emissions, and can be readily verified. Section 41960.2(c) (2) of the HSC requires the Executive Officer to periodically review the VRED List to determine if it needs to be updated to reflect changes in equipment technology and performance.

An air pollution control district (APCD or district) or an air quality management district (AQMD or district) is responsible for inspecting local gasoline dispensing facilities (GDF) and enforcing vapor recovery violations involving equipment defects and performance test failures (sections 40752 and 41960.2(d) - (e), HSC). When a district determines that a component contains a defect specified in the VRED List, the district must remove the equipment from service until it has been replaced, repaired, or adjusted.

Proposals to update the current VRED List can be placed into three categories: removal of tables for systems previously approved in Executive Orders (E.O.) which are no longer valid for use in California, identification of aboveground storage tank (AST) system E.O.s, and inclusion of defects for E.O.s signed since the last amendment to the VRED List. ARB staff believes that amending the VRED List will enhance the ability of anyone using it to identify, and repair or replace, those defects that could significantly affect the effectiveness of gasoline vapor recovery systems.

Local air district staff, manufacturers' representatives, and trade associations representing GDFs have collaborated with ARB staff on the development of this update to the VRED List. The local districts have provided valuable suggestions regarding technical information, identification of correct verification procedures, and clarification of listed defects.

The proposed amendments to the VRED List are based on two goals. The first is to provide clear direction concerning proper equipment operation and maintenance to the owners and operators of the dispensing facilities. The second is to provide clear direction to the local districts concerning inspections and defect detection at dispensing facilities.

The proposed amendments affect a multitude of stakeholders. These include the vapor recovery equipment manufacturers, gasoline marketers who purchase this equipment, contractors who install and maintain vapor recovery systems, and the inspectors at the districts who enforce vapor recovery rules. In addition, California certified systems are required by many other states and countries.

The emission reductions associated with the vapor recovery program have already been accounted for in the State Implementation Plan (SIP). However, consistency between defects listed in E.O.s and those in VRED tables will enhance compliance by GDF operators and enforcement by the districts, making it more likely that the promised reductions will, in fact, occur.

Staff recommends that ARB Executive Officer approve the proposed amendments to the VRED List.

1. Introduction

1.1 Overview

This Initial Statement of Reasons (ISOR or Staff Report) contains ARB staff's proposal for amending the VRED List incorporated by reference in section 94006(b), title 17, CCR. The VRED List is a compilation of conditions which substantially impair the effectiveness of vapor recovery systems used to control motor vehicle gasoline refueling emissions. This ISOR contains the following information:

- Background and rationale for the proposed amendments
- Description of the public process
- Need for emission control
- Description of the proposed amendments
- Environmental impacts
- Economic impacts
- Future activities

1.2 History

In 1982, ARB compiled a list of 12 defects for vapor recovery equipment and incorporated the list into title 17, CCR, section 94006. These defects applied generally to all vapor recovery systems, regardless of type or manufacturer. Since 1982, the Executive Officer has certified vapor recovery equipment and described the significant defects associated with each of the systems in the Executive Order (E.O.) certifying the system. The technology and design of the vapor recovery systems have changed significantly since the original list was adopted. The original VRED List, first adopted September 23, 2002, was required to have regular and periodic updates. Changes are now more rapid and defects are more system dependent. Updating the list will enhance compliance efforts by GDF operators and district enforcement personnel.

The ARB must identify and list equipment defects that substantially impair the effectiveness of these systems and periodically update the list as appropriate (HSC sections 41960.2(c) and (d)). Each listed defect results in the generation of excess hydrocarbon (HC) emissions during the vehicle refueling process. Furthermore, the districts are required to remove from service all equipment that has been determined to contain a listed defect or is affected by defective equipment.

2. Background

In 2002, the board adopted criteria to define what would constitute a defect "substantially impairing the effectiveness" of vapor recovery equipment used in motor vehicle refueling operations. The criteria are:

1. The defect did not exist when the system was certified;
2. The excess emissions associated with the defect have the potential to degrade fueling point or system efficiency by at least five percent; and
3. A field verification procedure exists to identify the defect.

Staff reviewed each E.O. in order to identify all defects which substantially impair the effectiveness of the systems in collecting gasoline vapors for inclusion in the VRED List incorporated by reference into section 94006(b), title 17 CCR. The objective was to consolidate all of the substantial defects into one list in order to enhance compliance and enforcement, rather than an incomplete list plus numerous system E.O.s. In 2005, the VRED List was amended to correct a variety of minor inconsistencies, provide clarification, and make editorial-type changes. This VRED List as amended June 22, 2005 is presented as Appendix 2 of this document, with proposed amendments shown in strikethrough for deletions and underline for additions. The purpose of the proposed amendments is to remove E.O.s for equipment that is no longer allowed to be used in California and to add defects for systems approved in E.O.s since the last amendment. This will enable both the district inspectors and GDF maintenance personnel to use their time more efficiently while inspecting GDFs. A comprehensive and complete description of each change is provided in section 4, Summary of Proposal (amendments to the VRED List).

2.1 Legal Authority

In 1999, the legislature enacted Assembly Bill 1164 (Stats 1999 ch 501 §1). It requires the Executive Officer to identify and list equipment defects in systems for the control of gasoline vapors resulting from motor vehicle fueling operations that substantially impair the effectiveness of the systems in reducing air contaminants. This became known as the VRED List. Assembly Bill 1164 also required the Executive Officer to conduct a public workshop on or before January 1, 2001 and at least once every three years thereafter to determine whether a list update is necessary (HSC section 41960.2(c)(2)) to reflect changes in equipment technology or performance.

The intent of AB 1164 was to focus enforcement efforts for gasoline vapor control systems on significant defects and to achieve more uniform enforcement of vapor recovery requirements. Updating the VRED List at this time will provide everyone involved in motor vehicle refueling vapor recovery with more accurate and current information regarding vapor recovery equipment defects.

2.2 Regulatory History

Gasoline vapor recovery systems have been used in California to control reactive organic gases (ROG), and specifically HC emissions, for over thirty years. The feasibility of the first vapor recovery systems was investigated at the district level, particularly in the San Diego and Bay Area Districts, in the early 1970s. State law enacted in 1975 requires the Executive Officer to “adopt procedures for determining the compliance of any system designed for the control of gasoline vapor emissions during gasoline marketing operations, including storage and transfer operations, with performance standards that are reasonable and necessary to achieve or maintain any applicable ambient air quality standard” (HSC section 41954(a)).

Under State law, the Executive Officer is directed to certify gasoline vapor recovery systems so that they meet minimum standards (HSC section 41954(c)) To comply with State law, the Board adopted the certification and test procedures found in section

94000 et seq., title 17, CCR. Additionally, State law requires the Executive Officer to list and identify defects that have the potential to substantially impair the effectiveness of the system (HSC section 41960.2(c)). The VRED List, incorporated into section 94006(b), title 17, CCR, lists those defects.

After certification, a system may be installed at a GDF anywhere in the State. The local districts are charged with inspecting GDFs to ensure the system is operating as certified. Part of the inspection procedure is to verify that the system is being operated free from the equipment defects specified in the List.

Because each gasoline transfer leads to displaced HC and benzene vapors, the use of efficient vapor recovery equipment is essential throughout the gasoline marketing chain. Vapor recovery systems are divided into separate but dependent parts that are independently certified, as described below.

2.2.1 Phase I Vapor Recovery

Phase I vapor recovery is applied to gasoline transfer operations involving cargo tank trucks. The first transfer occurs when the cargo tank is filled with petroleum product at the loading rack of a refinery terminal or a bulk plant. While the cargo tank is filled, gasoline vapor from the cargo tank is recovered.

As illustrated in Figure 1, Phase I vapor recovery also includes the transfer from the cargo tank to GDF. Phase I vapor recovery is required throughout California.

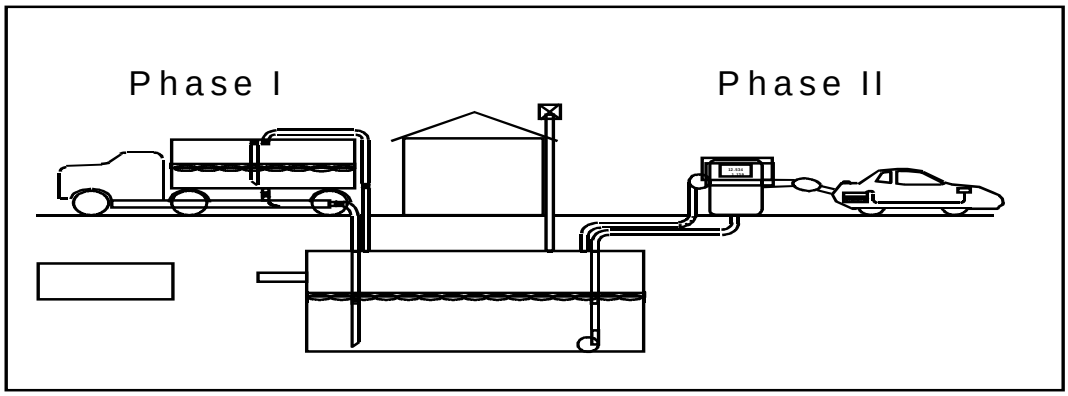

Figure 1: Phase I and Phase II Operations

2.2.2 Phase II Vapor Recovery

Phase II vapor recovery controls ROG emissions resulting from gasoline transfer operations at GDFs to vehicles. This is the vapor recovery equipment that many retail customers operate routinely when fueling vehicles. The two main types of Phase II vapor recovery systems are “balance” and “vacuum assist.”

The balance systems can be identified by the long bellows or boot on the nozzle. The end of the bellows must make a good seal with the vehicle fill neck opening when the nozzle is dispensing fuel into the vehicle. This ensures the vapor pushed out of the vehicle tank while filling is routed back through the nozzle to GDF storage tank vapor space. This is sometimes referred to as a “passive” system.

Assist system nozzles, in contrast, require a vacuum generating device to collect vapors from the vehicle tank during refueling. The refueling vapors are drawn through a series of holes in the spout and are routed to GDF storage tank. This requires use of an active vapor pump. Some assist systems also have processors to manage GDF storage tank vapor space pressure. Two currently certified systems operate with burners on or near the vent pipe in order to reduce emissions.

The proposed regulatory changes deal only with Phase I and Phase II vapor recovery systems at GDFs, not terminals or bulk plants.

2.3 Public Process

2.3.1 Public Workshop

The ARB conducted a public workshop on Thursday, November 9, 2006, in Sacramento to review the current VRED List and to determine the need for an update.

Summary of the November 9, 2006 Workshop

In accordance with the three-year legislative requirement previously discussed in section 2.1, the purpose of this meeting was to determine whether or not the VRED List, as amended June 22, 2005, needed to be updated. Participants also discussed possible defects not currently specified. An update was determined to be necessary and modifications to the VRED List were proposed. Attendees included representatives from local regulatory agencies, California Air Pollution Control Officers Association (CAPCOA), equipment manufacturers, petroleum suppliers, and ARB.

After introductions, a brief Power Point presentation covered the following topics: equipment defect history, ARB defect authority, ARB‘s requirements, defect determination criteria, potential list changes, requests for additional changes, and future action. A handout of a draft proposal of changes to the VRED List was then discussed with reasons for each change explained and questions answered by ARB staff.

The proposed changes to the VRED List, including removal of E.O.s for equipment no longer allowed to be used in California, were fully supported. Additional defective conditions for were proposed. The suggestions included proposed defects which were previously not considered substantial, but now added, because they were found to meet the definition of substantially impairing. Other conditions warranted further investigation to determine if their presence impacted system efficiency by at least five percent. The ARB staff posted the most recent draft of the list on the web to allow all stakeholders, whether attending the workshop or not, to comment.

2.3.2 CAPCOA/District Meetings

In addition to the workshop, ARB staff worked closely with district staff. Two major meetings affecting the VRED List update were held with district staff serving on the CAPCOA Vapor Recovery Committee.

Summary of the January 18, 2007 CAPCOA Presentation/Meeting

The ARB staff presented an update of the proposed VRED List to CAPCOA's Vapor Recovery Committee. A handout with proposed changes was passed out and discussed. A plan to conduct field-testing to determine if there is a five percent reduction in efficiency from some of the additional defects proposed at the Workshop was presented and discussed. Additional suggestions for improving the VRED List were raised by committee members.

Summary of the April 26, 2007 CAPCOA Presentation/Meeting

The ARB staff presented an update of the proposed VRED List to CAPCOA's Vapor Recovery Committee. Preliminary results of the field-testing to determine the efficiency reduction of additional defects was presented and discussed. The Healy dispenser tightness test failure was shown not to meet the criterion of substantially impairing. Additional suggestions for improving the VRED List were raised by committee members and ARB staff expressed a commitment to investigate those suggestions.

2.3.3 Internet Availability

Beginning in the first quarter of 2003, when it became apparent that modifications to the VRED List would be beneficial, the proposed VRED List was available on ARB's Internet website. With each set of changes, a new draft of the VRED List was posted and subscribers to the Vapor Recovery List Server were notified. Information regarding the public workshop and other meetings was also posted. To help identify changes, strikethrough or underline notation was used for deletions, or additions, respectively.

3. Need for Emission Control

3.1 Background

Significant strides have been made in improving California's air quality. Nonetheless, most regions throughout California continue to exceed health-based State and federal air quality standards. Areas exceeding the State and federal 1-hour ozone standard include the South Coast Air Basin, the San Francisco Bay area, San Diego County, the San Joaquin Valley, the Southeast Desert, the broader Sacramento area, and Ventura County.

Created by the photochemical reaction of ROG and oxides of nitrogen (NO_X), ozone causes harmful respiratory effects including lung damage, chest pain, coughing, and shortness of breath. Ozone is particularly harmful to children, the elderly, athletes, and persons with compromised respiratory systems. Environmental effects of ozone

exposure include substantial damage to crops, buildings, materials, and other structures.

Emission controls have been placed on both mobile and stationary sources of ROG and NO_X. Some of the earliest and most successful measures for ROG control are vapor recovery collection systems for petroleum marketing operations. The emission reductions attributable to vapor recovery from GDFs alone are projected to be 118 tons per day in the year 2010, in the South Coast Air Basin, more than the reductions for low emission vehicles or cleaner burning gasoline. Emission reductions associated with the rigorous implementation and enforcement of the vapor recovery program are expected to achieve the emission reductions credited for gasoline transfer applications in the 1994 SIP. The VRED List and the Enhanced Vapor Recovery (EVR) program, adopted by the Board in March 2000, provide and reinforce these reductions. Vapor recovery also reduces toxic air contaminant (TAC) emissions such as benzene.

Even with current controls, petroleum product transfers result in significant emissions. According to the 1995 emissions inventory, petroleum-marketing operations (which include emissions at GDFs and cargo tank loading facilities) emit 77 tons per day (tpd) of ROG statewide. This is about 10 percent of the total ROG (740 tpd) from all stationary sources combined. About half of the statewide 77 tpd of ROG are emitted in the South Coast Air Basin. These emission totals assume that the vapor recovery systems at the more than 11,250 GDFs in the State are operating at a minimum of 90 percent efficiency.

3.2 Impact on the State Implementation Plan for Ozone

3.2.1 SIP History

The 1994 SIP for Ozone is California's master plan for achieving the federal ozone standard in six areas of the State by 2010. The SIP includes State measures to control emissions from motor vehicles and fuels, consumer products and pesticide usage, local measures for stationary and area sources, and federal measures for sources under exclusive or partial federal control. The U.S. EPA approved the 1994 SIP in September 1996 (62 Federal Register 1150-1201 (January 8, 1997)).

Once U.S. EPA approved the 1994 SIP, the emission inventories and assumptions used in it are frozen until it is formally amended. Evaluations of the impacts on the 1994 SIP of new measures, or modifications to existing measures, must use the same emission inventories and assumptions used in developing the 1994 SIP.

3.2.2 SIP Lawsuit Settlement

As ARB has implemented the 1994 SIP, some measures have delivered more reductions than anticipated, while other measures have delivered fewer reductions, due to technological, economic, social, and other contingencies associated with the implementation of a regulatory plan or program.

In 1997, a lawsuit was filed against the South Coast AQMD, ARB, and U.S. EPA by three Los Angeles based environmental groups for failure to implement specific

measures contained in the 1994 SIP (Coalition for Clean Air v. South Coast AQMD). In January 1999, the Board approved a settlement regarding ARB's portion of SIP litigation. The lawsuit settlement addresses near-term emission reduction shortfalls of 42 tpd of ROG and 2 tpd of NO_X in the South Coast Air Basin in 2010. The ARB must implement programs to achieve the specific emission reduction goals outlined in the lawsuit settlement agreement.

3.2.3 Impacts of Proposed Amendments to the VRED List

The emissions reductions attributed to the vapor recovery program are currently set forth in the SIP and are not being amended. The proposed amendments to the VRED List should be beneficial to the vapor recovery effort by enhancing compliance and enforcement. Therefore, meeting the existing SIP commitments should be more achievable in practice when the proposed list is adopted.

4. Summary of Proposal

4.1 Introduction

This section describes ARB staff's proposal to amend the VRED List, incorporated by reference in section 94006(b), title 17, CCR.

In1982, a list of substantially impairing equipment defects was first set forth in section 94006, title 17, CCR. Subsequently, identified defects were specified in E.O.s certifying the systems. As directed by Assembly Bill 1164, the Executive Officer assembled all substantially impairing defects from these E.O.s for inclusion into the VRED List, adopted September 23, 2002 and amended June 22, 2005.

4.2 Proposed Changes

The specific proposals to update the VRED List can be placed into four categories: 1) removal of E.O.s pertaining to equipment no longer valid for use in California; 2) identification of aboveground storage tank (AST) systems E.O.s; 3) inclusion of defects for equipment certified in E.O.s signed since the last amendment to the VRED List; and 4) new defect identification methods. All changes are underlined for additions and strikethrough for deletions in the proposed VRED List in Appendix 2. Each type of VRED List change is described by category in the following sections.

4.2.1 Removal of E.O.s

As of March 1, 2006, any Phase II vapor recovery system used in California must be compatible with automobiles using an onboard refueling vapor recovery (ORVR) system. Those Phase II systems which are not ORVR compatible are no longer acceptable in the State and their certifications are no longer valid. Thus, staff is proposing to remove their VRED tables from the list.

Another recent standard for vapor recovery systems is the 350 milliliter liquid retention standard. Nozzles that have not been certified to the liquid retention standard may no

longer be used in California. Staff proposes to remove any VRED table for systems which do not have at least one nozzle certified to the liquid retention standard.

These two criteria result in the removal from the VRED List of the defects for equipment previously certified in 30 E.O.s. These unacceptable systems happen to be split evenly, with 15 balance systems and 15 vacuum assist systems being removed.

4.2.2 Identification of Aboveground Storage Tank (AST) Systems

Underground storage tanks (UST) have traditionally been referred to using the initials "UST," while aboveground tanks used "AGT." Recent modifications to aboveground storage tank regulations replaced "AGT" with "AST." The initials "AGT" are being used in VRED List titles because this is the title of the E.O.; however, "AST" in parenthesis in the VRED List is to emphasize that this is an aboveground storage tank defect. Those E.O.s signed since this change have only "AST" in the VRED List title and the title of the E.O.

4.2.3 Defects for New E.O.s (Signed Since the Last Amendment to the VRED List)

Six new E.O.s for systems that may have identifiable substantial defects have been signed since the last amendment of the VRED List. Two of these systems are EVR Phase II systems and four are AST systems. Staff is proposing to add a VRED table for each of these systems, with the appropriate defects listed.

4.2.4 New Defect Identification

Defect identification methods used in the verification procedure column on the last page of the VRED List need to be updated. As new VRED tables have been added for new E.O.s and other tables have been removed, the verification procedures need to be updated to reflect these changes. Staff proposes the removal of one verification procedure because it is no longer used in any of the remaining defects. Finally, staff proposes to add nine new procedures for the new tables.

5. Environmental Impacts

5.1 Summary of Environmental Impacts

This section contains ARB staff's assessment of the potential environmental impacts that would result from amending the proposed VRED List. Both the California Environmental Quality Act (CEQA) and Board policy require the Executive Officer to consider the potential adverse environmental impacts of proposed regulations. The ARB staff evaluated the potential environmental impacts of the amendments, including impact on ground-level ozone, particulate matter, toxicity, global warming, stratospheric ozone depletion, water quality, and solid waste disposal. The ARB staff also evaluated the impact on the emission reduction commitments contained in the SIP for ozone. In addition, the Executive Officer will respond in writing to all significant environmental points raised by the public during the public review period or at the Board hearing.

These responses will be available prior to final adoption of the amendments and will be set forth in the Final Statement of Reasons for the modifications to the VRED List.

The ARB staff found that the proposed amendments should not result in an increase or decrease in excess emissions. Thus, no adverse environmental impacts are expected to result from the proposed amendments to the VRED List. Because no potential adverse impacts are expected, the focus of the following analysis will be on benefits.

5.2 Legal Requirements for Assessing the Environmental Impacts

Section 21159, of the Public Resources Code (Analysis of Methods of Compliance) requires that the environmental impact analysis conducted by ARB for new regulatory requirements include the following:

- an analysis of the reasonably foreseeable environmental impacts of the methods of compliance (Section 5.3);
- an analysis of reasonably foreseeable feasible mitigation measures (Section 5.4); and,
- an analysis of reasonably foreseeable alternative means of compliance with the rule or regulation (Section 7).

5.3 Potential Environmental Impacts

5.3.1 Impact on Ground-Level Ozone and Water Quality

The proposed amendments would have a minimal to slightly beneficial impact on ground level ozone and water quality. The amendments being made to the VRED List are currently contained in the existing regulatory provision or in E.O.s certifying vapor recovery systems, and as such are already enforceable. By clarifying the VRED List, enforcement should be strengthened and compliance should become less difficult.

Consistent enforcement may help identify components with short lifecycles and discourage their use. This should have some effect in the replacement of inferior products and provide manufacturers with an incentive to raise quality. Improved equipment, through increased compliance and stronger enforcement, should decrease emissions.

5.3.2 Impact On Global Warming and Stratospheric Ozone Depletion

The use of vapor recovery equipment does not alter carbon dioxide, chlorofluorocarbon type, or related compounds emissions; therefore, no impact on global warming or stratospheric ozone depletion is expected.

5.3.3 Impact on Particulate Matter

The proposed amendments are not likely to cause an increase in the formation of particulate matter or secondary organic aerosols. Secondary organic aerosols are

usually formed from the photo-oxidation of organic compounds with carbon numbers equal to seven or more.

5.3.4 Impact on Toxic Air Contaminants

Any impact the proposed amendments would have on emissions of TACs including benzene should be favorable. This is because the VRED List facilitates enforcement of vapor recovery requirements. In accordance with the requirements of HSC section 41960.2 (d), section 93101(d), title 17, CCR states:

> No owner or operator shall use or permit the use of any Phase II system or any component thereof containing a defect identified in title 17, California Code of Regulations, section 94006 [*VRED List*] until it has been repaired, replaced, or adjusted, as necessary to remove the defect, and, if required under Health and Safety Code section 41960.2, district personnel have reinspected the system or have authorized its use pending reinspection.

The use of improved and better-maintained equipment, with increased compliance and stronger enforcement, should decrease TAC emissions associated with gasoline vehicle refueling.

5.3.5 Impact On Solid Waste Disposal

The impact on solid waste disposal should be somewhat favorable at best or minimal at worst. If improved enforcement and increased compliance causes manufacturers to raise product quality and durability, fewer defective parts will make their way into landfills. Manufacturers now reuse parts of many components. With more durable products this practice should increase, leading to even less material being discarded.

5.4 Mitigation Measures

ARB staff has not identified any adverse environmental impact that would result from the proposed amendments. No mitigation measures are necessary.

6. Economic Impacts

6.1 Background

In general, economic impact analyses are inherently imprecise, especially given the unpredictable behavior of companies in a highly competitive market such as gasoline marketing and distribution. Some projections are necessarily qualitative and based on general observations and facts known about the gasoline marketing and distribution industry. This impacts analysis, therefore, serves to provide a general picture of the economic impacts typical businesses might encounter because of the compliance and enforcement repercussions of the proposed amendments. Staff recognizes that individual companies may experience different impacts than projected in this analysis.

Overall, the proposed amendments are not expected to impose an unreasonable cost burden on gasoline dispensing equipment manufacturers, component suppliers, or GDFs. Most of the major manufacturers are located outside of California although some may have small operations in the State. GDFs are local businesses by nature, and all affected GDFs are California-based.

6.2 Potential Impact on Business

The ARB staff expects no significant adverse impacts on manufacturers' profitability, employment in California, the status of California businesses, or competitiveness of California businesses with businesses in other states. Most GDFs in California are subject to an annual compliance inspection. Proposals to update the current VRED List can be placed into three categories: removal of tables for E.O.s which are no longer valid for use in California, identification of AST system E.O.s, and inclusion of defects for E.O.s signed since the last amendment to the VRED List. A clearer reference for detection of vapor recovery equipment defects encourages uniform enforcement across the State and provides preventative maintenance guidance for GDF operators. A greater understanding of the defects for vapor recovery systems will reduce the need for more stringent standards in the future, thereby lowering the compliance costs to California operators. Given these projections, ARB staff has determined that adoption of the proposed amendments does affect small business, but beneficially.

In accordance with the California Administrative Procedure Act, section 11346.3 (b), of the Government Code, the Executive Officer has determined that adoption of the proposed regulatory action should have no impact on the creation or elimination of jobs within California; the creation of new businesses or elimination of existing businesses within California; or the expansion of any business currently doing business in California.

6.3 Cost to State Agencies and Local Government

The proposed amendments will not create any fiscal impacts or mandate to any local governmental agency or school district whether or not reimbursable by the State pursuant to part 7 (commencing with section 17500), division 4, title 2 of the Government Code, or other non-discretionary savings to local agencies, nor will the proposed amendments create costs or savings to any State agency. Programs are currently in place to identify vapor recovery equipment defects as systems are certified. Resources are also available for completing future reviews and revisions of the list.

7. Evaluation of Alternatives

The alternative to amending the VRED List is to do nothing and to have an out-dated list. An out-dated list perpetuates the decentralization of defect specification making both compliance and enforcement more difficult and increasing inconsistency among the air districts. This was the situation prior to implementing the periodic review required in HSC section 41960.2(c), which resulted in Board adoption of the original VRED List.

Periodic review encourages timely updating of the VRED List.

Section 41960.2(c) (2), HSC states:

> On or before January 1, 2001, and at least once every three years thereafter, the list required to be prepared pursuant to paragraph (1) shall be reviewed by the executive officer at a public workshop to determine whether the list requires an update to reflect changes in equipment technology or performance.

The VRED List amended in 2002 and 2005 included several items that were discovered by using the VRED List in the field. From this first list a number of successive alternatives have been developed, and evaluated in public and private meetings. The current modified VRED List presented to the Executive Officer for approval is based on these progressive evaluations of options.

8. Future Activities

8.1 AB1164 Requirements

In 1999, Assembly Bill 1164 amended section 41960.2 (c)(2), HSC to require the Executive Officer of ARB to review section 94006, title 17, CCR, (VRED List) at a public workshop at least once every three years to determine whether a list update is necessary to reflect changes in equipment technology or performance. The HSC also authorizes the Executive Officer to initiate public review of the list upon a written request. The request must demonstrate, to the Executive Officer's satisfaction, that such a review is needed. Also, if the Executive Officer determines that the list should be updated, the update must be completed within 12 months of the determination. Because of the rapid technological change in vapor recovery equipment, ARB staff anticipate these update requirements will generate changes to the defects listed every three years, if not more often.

8.2 Decertification of Pre-EVR Systems

In March 2000, the Board adopted new standards for vapor recovery equipment certification. The new standards are referred to collectively as enhanced vapor recovery or EVR. The equipment in each existing E.O., with the exception of EVR and AST E.O.s, is scheduled to be decertified by April 1, 2009. As the old equipment components in E.O.s are decertified, any associated defects listed will no longer be applicable and should be removed from the VRED List.

8.3 EVR Executive Orders with Defects Listed

Just as a number of substantial equipment defects listed with the existing pre-EVR systems will be removed, a number of defects associated with the newly certified EVR systems will need to be added to the VRED List as the new components are certified. These new defects will initially be specified in each E.O. before being examined during a periodic review of the VRED List. The ARB staff assesses each new system that is

certified in an E.O. for defects, and will periodically update the VRED List as necessary to keep it current.

9. Conclusion

The Executive Officer has identified and listed the substantially impairing defects in the VRED List incorporated by reference in section 94006(b), title 17 CCR. The regulation (section 94006(a), title 17, CCR) requires any defect that meets the following criteria be considered substantial:

1. The defect did not exist when the system was certified;
2. The excess emissions associated with the defect have the potential to degrade fueling point or system efficiency by at least five percent; and
3. A field verification procedure exists to identify the defect.

The ARB staff has identified conditions in vapor recovery equipment components that meet the above criteria, and is proposing amendments to the VRED List.

The proposed amendments affect a multitude of stakeholders. These include the vapor recovery equipment manufacturers, gasoline marketers who purchase this equipment, contractors who install and maintain vapor recovery systems, and the inspectors at the districts who enforce vapor recovery rules. In addition, California certified systems are required by many other states and countries. It is important to keep the VRED List current and accurate.

The emission reductions associated with the vapor recovery program have already been accounted for in SIP. However, consistency between defects listed in the E.O.s that certify vapor recovery systems and equipment and those in the VRED tables will enhance compliance by GDF operators and enforcement by the districts, making it more likely that the promised reductions will, in fact, occur.

Therefore, staff recommends that the Executive Officer approve the proposed amendments to the VRED List.

this page intentionally left blank

.

Appendix 1: Proposed Regulation Order
Title 17, California Code of Regulations, section 94006

this page intentionally left blank

Proposed Regulation Order
Proposed Amendments to the Vapor Recovery Equipment Defects List

Note: Set forth below are the proposed amendments to the Defects Substantially Impairing the Effectiveness of Vapor Recovery Systems Used in Motor Vehicle Fueling Operations. The text of the proposed amendments is shown in underline to indicate additions and ~~strikeout~~ to indicate deletions, compared to the preexisting regulatory language.

Amend Article 1, Subchapter 8, Chapter 1, Division 3, Title 17, California Code of Regulations to read as follows:

§94006. Defects Substantially Impairing the Effectiveness of Vapor Recovery Systems Used in Motor Vehicle Fueling Operations.

(a) For the purposes of Section 41960.2 of the Health and Safety Code, any defect that meets the following criteria shall be considered substantial and listed by the Air Resources Board: the defect did not exist when the system was certified; the excess emissions associated with the defect have the potential to degrade fueling point or system efficiency by at least five percent; and, a field verification procedure exists to identify the defect.

(b) For the purposes of section 41960.2 of the Health and Safety Code, equipment defects in systems for the control of gasoline vapors resulting from motor vehicle fueling operations which substantially impair the effectiveness of the systems in reducing air contaminants are set forth in the "Vapor Recovery Equipment Defects List" adopted September 23, 2002, as last amended ~~June 22, 2005~~[insert date**]** which is incorporated by reference herein.

NOTE: Authority cited: Sections 39600, 39601 and 41960.2, Health and Safety Code. Reference: Sections 41954 and 41960.2, Health and Safety Code.

this page intentionally left blank

Appendix 2:
Proposed Amendments to the Vapor Recovery Equipment Defects List

Amended: June 22, 2005

this page intentionally left blank

California Environmental Protection Agency

Air Resources Board

Vapor Recovery Equipment Defects List

Adopted: September 23, 2002
Amended: June 22, 2005
Amended: [insert date]

this page intentionally left blank

Vapor Recovery Equipment Defects List
Date of Issuance: ~~June 22, 2005~~ [insert date]

GVR All Systems/any E.O.		
equipment	defects	verification procedure
(a) system	(1) any equipment defect which is identified in an Executive Order (E.O.) certifying a system pursuant to the Certification Procedures incorporated in Section 94011 of Title 17, California Code of Regulations	as set forth in the applicable E.O.
	(2) absence, improper installation, or disconnection of any component required to be used in the E.O.(s) that certified the system	direct observation
	(3) installation or use of any uncertified component	direct observation
	(4) dispensing rate greater than ten (10.0) gallons per minute (gpm) or less than the greater of five (5.0) gpm or the limit stated in the E.O. measured at maximum fuel dispensing	when determined as part of any ARB approved test method or direct measurement for 30 seconds minimum
	(5) phase I vapor poppet inoperative	direct observation
(b) nozzles	(1) nozzle automatic liquid shutoff mechanisms which malfunction in any manner	EPO No. 26-F-1/direct observation

note: Each defect in the tables in this list has a specific alphanumeric identification. Every identification has three parts: i) the Executive Order number for the table in which the defect appears (or GVR-general vapor recovery-for this "All Systems/any E.O." page only), ii) a sequential letter for the equipment with which the defect is associated, and iii) a sequential number for the defect itself. As the "equipment" column in the table changes, the defect number sequence that is associated with the specific equipment begins again with one ("(1)"). The same is true for the equipment letter: at the start of a new table the first identifying letter associated with the first equipment listed will be "a," the second "b," and so on. The Executive Order number (part i) is comprised of the characters which proceed the literal description of the system.

For example, the identification for the defect above which is written "installation or use of any uncertified component" is "GVR(a)(3)" and the last defect in the ~~next~~ table on ~~(~~page 3 ~~2)~~ is "G-70-~~7~~175(~~d~~i)(1)".

~~G-70-7 series Hasstech VCP-2 and VCP-2A~~		
~~equipment~~	~~defects~~	~~verification procedure~~
~~(a) system~~	~~(1) any fueling point associated with a vapor line disconnected and open to the atmosphere, including all fueling points at the facility if vapor lines are manifolded~~	~~direct observation~~
	~~(2) system not in compliance with the static pressure decay test criteria *~~	~~TP201.3 or equivalent~~
	~~(3) any grade of a fueling point not capable of demonstrating an air to liquid ratio compliance with its performance standard~~	~~TP201.5 or equivalent~~
	~~(4) pressure drop through the system exceeds one-half (0.50) inch water column at sixty cubic feet per hour (60 CFH)~~	~~TP201.4 or equivalent~~
~~(b) hoses~~	~~(1) any coaxial hose with a perforation exceeding one-eighth (0.13) inch diameter~~	~~direct measurement/ observation~~
	~~(2) any coaxial hose with slits or tears in excess of one-fourth (0.25) inch in length~~	~~direct measurement/ observation~~
~~(c) processing unit~~	~~(1) three consecutive unsuccessful attempts to ignite the incinerator which occur at least two hours after a bulk delivery *~~	~~direct measurement/ observation/system monitor observation~~
	~~(2) unit does not activate when the system pressure reaches or exceeds two (2.0) inches water column and occurs at least two hours after a bulk delivery *~~	~~direct measurement using storage tank pressure device~~
	~~(3) emissions which exceed Ringelmann one-half (½) or ten percent (10%) opacity and not attributable to a bulk delivery *~~	~~Method 9~~
	~~(4) vapor processing unit inoperative *~~	~~direct observation~~
~~(d) collection unit~~	~~(1) vacuum producing device inoperative *~~	~~direct observation~~

~~* When the identified defect is detected in the listed equipment, the defect determination applies to all affected interrelated systems (which may include all systems at the motor vehicle fueling operation).~~

~~G-70-14 series Red Jacket~~	G-70-17 series Emco Wheaton	~~G-70-23 series Exxon~~
~~G-70-25 series Atlantic Richfield~~	~~G-70-33 series Hirt~~	~~G-70-36 series OPW~~
~~G-70-38 series Texaco~~	~~G-70-48 series Mobil~~	~~G-70-49 series Union~~
G-70-52 series Red Jacket, Hirt	~~G-70-53 series Chevron~~	~~G-70-78 series EZ-flow rebuilds~~
~~G-70-107 series Rainbow rebuilds~~	~~G-70-125 series Husky Model V~~	~~G-70-127 series OPW 111V~~
~~G-70-134 series EZ-flow rebuilds~~	G-70-139 series Hirt AST	~~G-70-170 series EZ-flow rebuilds~~

equipment	defects	verification procedure
(a) nozzles	(1) any nozzle boot torn in one or more of the following manners: a triangular-shaped or similar tear one-half (0.50) inch or more on any side, or hole one-half (0.50) inch or more in diameter, or slit one (1.0) inch or more in length	direct measurement/ observation
	(2) any faceplate or flexible cone damaged in the following manner: for balance nozzles and for nozzles for aspirator and eductor assist type systems, damage such that the capability to achieve a seal with a fill pipe interface is affected for one-fourth (25%) of the circumference of the faceplate (accumulated)	direct measurement/ observation
	(3) flexible cone damaged in the following manner: for booted type nozzles for vacuum assist-type systems, more than one-fourth (25%) of the flexible cone missing	direct measurement/ observation
	(4) insertion interlock mechanism which will allow dispensing when the bellow is uncompressed	direct observation/ GDF-09
(b) hoses	(1) any coaxial balance hose with 100 ml or more liquid in the vapor path	direct measurement
	(2) any hose with a visible opening	direct observation
(c) processing unit	(1) vapor processing unit inoperative *	direct observation
(d) vapor return lines	(1) pressure drop through the vapor path exceeds by a factor of two or more requirements specified in the Executive Order(s) that certified the system	TP201.4 or equivalent

* When the identified defect is detected in the listed equipment, the defect determination applies to all affected interrelated systems (which may include all systems at the motor vehicle fueling operation).

note: The identification scheme for defects listed in this table is the same three part alphanumeric identification (see page 1) as the other tables. However, the correct Executive Order number will be the one for the specific system in question. For example, the identification for the defect above which is written “any hose with a visible opening” will begin “G-70-“ and end with “(b)(2).” On the Atlantic Richfield system it will be “G-70-25(b)(2)”, on the Texaco system it will be “G-70-38(b)(2)”, and so on.

~~G-70-118 series Amoco V-1~~		
~~equipment~~	~~defects~~	~~verification procedure~~
~~(a) system~~	~~(1) defective vapor valve~~	~~GDF-01/GDF-02~~
	~~(2) any grade of a fueling point not capable of demonstrating an air to liquid ratio compliance with its performance standard~~	~~TP201.5 or equivalent~~
	~~(3) any fueling point associated with a vapor line disconnected and open to the atmosphere, including all fueling points at the facility if vapor lines are manifolded~~	~~direct observation~~
	~~(4) system not in compliance with the static pressure decay test criteria *~~	~~TP201.3 or equivalent~~
	~~(5) pressure drop through the system exceeds one-half (0.50) inch water column at sixty cubic feet per hour (60 CFH)~~	~~TP201.4 or equivalent~~
~~(b) Husky V-1 nozzle~~	~~(1) efficiency compliance device (ECD) damaged such that at least one eighth (13%) of the diameter is missing~~	~~direct measurement/ observation~~
	~~(2) less than two unblocked vapor holes~~	~~direct observation~~
~~(c) OPW 11-VAA nozzle~~	~~(1) any ECD damaged such that a slit from the outer to inner edge exists~~	~~direct measurement/ observation~~
	~~(2) less than three unblocked vapor holes~~	~~direct observation~~

~~* When the identified defect is detected in the listed equipment, the defect determination applies to all affected interrelated systems (which may include all systems at the motor vehicle fueling operation).~~

~~G-70-150 series Marconi (Gilbarco)Vapor Vac~~		
~~equipment~~	~~defects~~	~~verification procedure~~
~~(a) system~~	~~(1) pressure drop through the system exceeds one-half (0.50) inch water column at sixty cubic feet per hour (60 CFH)~~	~~TP201.4 or equivalent~~
	~~(2) any fueling point associated with a vapor line disconnected and open to the atmosphere, including all fueling points at the facility if vapor lines are manifolded~~	~~direct observation~~
	~~(3) system not in compliance with the static pressure decay test criteria *~~	~~TP201.3 or equivalent~~
	~~(4) both booted and unbooted nozzle types connected to the same vapor pump~~	~~direct observation~~
	~~(5) any grade of a fueling point not capable of demonstrating an air to liquid ratio compliance with its performance standard~~	~~TP201.5 or equivalent~~
~~(b) Catlow ICVN nozzle~~	~~(1) less than three unblocked vapor holes~~	~~direct observation~~
	~~(2) defective vapor valve~~	~~GDF-01/GDF-02~~
	~~(3) efficiency compliance device slit from base to the rim~~	~~direct observation~~
~~(c) Emco Wheaton A4505 nozzle~~	~~(1) less than three unblocked vapor holes~~	~~direct observation~~
	~~(2) defective vapor valve~~	~~GDF-01/GDF-02~~
	~~(3) one-eighth (13%) of vapor guard circumference missing~~	~~direct measurement/ observation~~
~~(d) Emco Wheaton A4500 nozzle~~	~~(1) less than three unblocked vapor holes~~	~~direct observation~~
~~(e) Husky V34 6250 nozzle~~	~~(1) a one and one-half (1.5) inch or greater slit in vapor splash guard~~	~~direct measurement/ observation~~
	~~(2) any hole greater than three-eighths (0.38) inch in vapor splash guard~~	~~direct measurement/ observation~~
	~~(3) defective vapor valve~~	~~GDF-01/GDF-02~~
~~(f) Husky V3 6201 nozzle~~	~~(1) all vapor holes blocked~~	~~direct observation~~
~~(g) OPW 11VAI nozzle~~	~~(1) less than four unblocked vapor holes~~	~~direct observation~~
~~(h) OPW12VW nozzle~~	~~(1) all vapor holes blocked~~	~~direct observation~~
	~~(2) defective vapor valve~~	~~GDF-01/GDF-02~~
	~~(3) vapor escape guard with three-fourths (75%) of the circumference missing~~	~~direct measurement/ observation~~

~~* When the identified defect is detected in the listed equipment, the defect determination applies to all affected interrelated systems (which may include all systems at the motor vehicle fueling operation).~~

~~G-70-153 series Dresser/Wayne Vac~~		
~~equipment~~	~~defects~~	~~verification procedure~~
~~(a) system~~	~~(1) any splash guard that interferes with the operation of a vapor escape guard (VEG) or vapor splash guard (VSG) unit~~	~~direct measurement/ observation~~
	~~(2) any grade of a fueling point not capable of demonstrating an air to liquid ratio compliance with its performance standard~~	~~TP201.5 or equivalent~~
	~~(3) any fueling point associated with a vapor line disconnected and open to the atmosphere, including all fueling points at the facility if vapor lines are manifolded~~	~~direct observation~~
	~~(4) system not in compliance with the static pressure decay test criteria *~~	~~TP201.3 or equivalent~~
	~~(5) pressure drop through the system exceeds one-half (0.50) inch water column at sixty cubic feet per hour (60 CFH)~~	~~TP201.4 or equivalent~~
	~~(6) defective vapor valve~~	~~GDF-01/GDF-02~~
~~(b) OPW 11VAI and Husky V34 6200-4 nozzles~~	~~(1) less than two unblocked vapor holes~~	~~direct observation~~
	~~(2) any VEG damaged such that at least one-eighth (13%) of the circumference is missing~~	~~direct measurement/ observation~~
~~(c) Husky V34 6200 nozzle~~	~~(1) less than two unblocked vapor holes~~	~~direct observation~~
~~(d) Husky V34 6200 and V34 6250 nozzles~~	~~(1) any VSG damaged such that at least a one and one-half (1.5) inch slit has developed~~	~~direct measurement/ observation~~
	~~(2) any VSG flange portion that does not make contact with or cover the entire fill-pipe opening~~	~~direct measurement/ observation~~
	~~(3) any VSG with a hole greater than three-eighths (0.38) inch~~	~~direct measurement/ observation~~
~~(e) Emco Wheaton A4505 nozzle~~	~~(1) less than three unblocked vapor holes~~	~~direct observation~~
	~~(2) any vapor guard (VG) damaged such that at least one-eighth (13%) of the circumference is missing~~	~~direct measurement/ observation~~
~~(f) Catlow ICVN and Richards Astrovac nozzles~~	~~(1) less than three unblocked vapor holes~~	~~direct observation~~
	~~(2) any efficiency compliance device damaged with a slit from the base to the rim~~	~~direct observation~~
~~(g) OPW 12VW nozzle~~	~~(1) all vapor holes blocked~~	~~direct observation~~
	~~(2) any VEG damaged such that at least three-quarters (75%) of the circumference is missing~~	~~direct measurement/ observation~~

~~* When the identified defect is detected in the listed equipment, the defect determination applies to all affected interrelated systems (which may include all systems at the motor vehicle fueling operation).~~

~~G-70-154 series Tokheim MaxVac~~		
~~equipment~~	~~defects~~	~~verification procedure~~
~~(a) nozzles~~	~~(1) defective vapor valve~~	~~GDF-01/GDF-02~~
~~(b) OPW 11VAI and Husky V34 6200-5 nozzles~~	~~(1) efficiency compliance device (ECD) damaged such that at least one-fourth (25%) of the circumference is missing~~	~~direct measurement/ observation~~
~~(c) Husky V34 6200 and V34 6250 nozzles~~	~~(1) less than two unblocked vapor holes~~	~~direct observation~~
	~~(2) vapor splash guard (VSG) damaged such that at least a one and one-half (1.5) inch slit has developed~~	~~direct measurement/ observation~~
	~~(3) VSG damaged such that greater than a three-eighths (0.38) inch hole has developed~~	~~direct measurement/ observation~~
~~(d) Emco Wheaton A4505~~	~~(1) less than seven unblocked vapor holes~~	~~direct observation~~
~~(e) Catlow ICVN and Richards Astrovac~~	~~(1) less than four unblocked vapor holes~~	~~direct observation~~
	~~(2) any nozzle with an ECD damaged with at least one-fourth (25%) of the circumference missing~~	~~direct measurement/ observation~~
~~(f) system~~	~~(1) any grade of a fueling point not capable of demonstrating an air to liquid ratio compliance with its performance standard~~	~~TP201.5 or equivalent~~
	~~(2) any fueling point associated with a vapor line disconnected and open to the atmosphere, including all fueling points at the facility if vapor lines are manifolded~~	~~direct observation~~
	~~(3) system not in compliance with the static pressure decay test criteria *~~	~~TP201.3 or equivalent~~
	~~(4) pressure drop through the system exceeds one-half (0.50) inch water column at sixty cubic feet per hour (60 CFH)~~	~~TP201.4 or equivalent~~

~~* When the identified defect is detected in the listed equipment, the defect determination applies to all affected interrelated systems (which may include all systems at the motor vehicle fueling operation).~~

~~G-70-159 series Saber nozzle for Gilbarco (Marconi) Vapor Vac and WayneVac~~		
~~equipment~~	~~defects~~	~~verification procedure~~
~~(a) nozzles~~	~~(1) a fill guard damaged such that at least one-fourth (25%) of the outer edge of the guard is missing~~	~~direct measurement/ observation~~
	~~(2) less than four unblocked vapor holes on the Gilbarco (Marconi) systems~~	~~direct observation~~
	~~(3) less than two unblocked vapor holes on the WayneVac systems~~	~~direct observation~~
	~~(4) defective vapor valve on the WayneVac systems~~	~~GDF-01/GDF-02~~
~~(b) system~~	~~(1) any grade of a fueling point not capable of demonstrating an air to liquid ratio compliance with its performance standard~~	~~TP201.5 or equivalent~~
	~~(2) any fueling point associated with a vapor line disconnected and open to the atmosphere, including all fueling points at the facility if vapor lines are manifolded~~	~~direct observation~~
	~~(3) system not in compliance with the static pressure decay test criteria *~~	~~TP201.3 or equivalent~~
	~~(4) pressure drop through the system exceeds one-half (0.50) inch water column at sixty cubic feet per hour (60 CFH)~~	~~TP201.4 or equivalent~~

~~* When the identified defect is detected in the listed equipment, the defect determination applies to all affected interrelated systems (which may include all systems at the motor vehicle fueling operation).~~

~~G-70-163 series OPW Vapor EZ~~		
~~Equipment~~	~~defects~~	~~verification procedure~~
~~(a) nozzles~~	~~(1) efficiency compliance device damaged such that at least one-eighth (13%) of the diameter is missing~~	~~direct measurement/ observation~~
	~~(2) less than three unblocked vapor holes~~	~~direct observation~~
	~~(3) defective vapor valve~~	~~GDF-01/GDF-02~~
~~(b) system~~	~~(1) any grade of a fueling point not capable of demonstrating an air to liquid ratio compliance with its performance standard~~	~~TP201.5 or equivalent~~
	~~(2) any fueling point associated with a vapor line disconnected and open to the atmosphere, including all fueling points at the facility if vapor lines are manifolded~~	~~direct observation~~
	~~(3) system not in compliance with the static pressure decay test criteria *~~	~~TP201.3 or equivalent~~
	~~(4) pressure drop through the system exceeds one-half (0.50) inch water column at sixty cubic feet per hour (60 CFH)~~	~~TP201.4 or equivalent~~

~~* When the identified defect is detected in the listed equipment, the defect determination applies to all affected interrelated systems (which may include all systems at the motor vehicle fueling operation).~~

~~G-70-164 series Hasstech VCP-3A~~		
~~equipment~~	~~defects~~	~~verification procedure~~
~~(a) system~~	~~(1) any fueling point associated with a vapor line disconnected and open to the atmosphere, including all fueling points at the facility if vapor lines are manifolded~~	~~direct observation~~
	~~(2) system not in compliance with the static pressure decay test criteria *~~	~~TP201.3 or equivalent~~
	~~(3) pressure drop through the system exceeds one-half (0.50) inch water column at sixty cubic feet per hour (60 CFH)~~	~~TP201.4 or equivalent~~
~~(b) OPW 11VAI steel spout~~	~~(1) less than six unblocked vapor collection holes~~	~~direct observation~~
	~~(2) defective vapor valve~~	~~GDF-01/GDF-02~~
~~(c) OPW 11VAI aluminum spout~~	~~(1) less than four unblocked vapor collection holes~~	~~direct observation~~
	~~(2) defective vapor valve~~	~~GDF-01/GDF-02~~
~~(d) Husky V3 6201 nozzle~~	~~(1) all vapor collection holes blocked~~	~~direct observation~~
~~(e) Husky V34 6200-8 nozzle~~	~~(1) all vapor collection holes blocked~~	~~direct observation~~
	~~(2) defective vapor valve~~	~~GDF-01/GDF-02~~
~~(f) Emco Wheaton A4500 nozzle~~	~~(1) any visible puncture or tear of the vapor guard/vapor seal assembly~~	~~direct observation~~
	~~(2) less than three unblocked vapor collection holes~~	~~direct observation~~
~~(g) collection unit~~	~~(1) any grade of a fueling point not capable of demonstrating an air to liquid ratio compliance with its performance standard~~	~~TP201.5 or equivalent~~
	~~(2) dispensing when the collection unit is disabled *~~	~~direct observation/ system monitor observation~~
	~~(3) normal operating level at the inlet of the collection unit less than thirty (30) inches water column vacuum *~~	~~direct measurement/ observation~~
~~(h) processing unit~~	~~(1) emissions which exceed Ringelmann one-half (½) or ten percent (10%) opacity and not attributable to a bulk delivery *~~	~~Method 9~~
	~~(2) twenty (20) consecutive unsuccessful attempts to ignite the process unit *~~	~~direct measurement/ observation/system monitor observation~~
	~~(3) dispensing when the process unit is disabled *~~	~~direct measurement/ observation/system monitor observation~~
	~~(4) processing unit inoperative *~~	~~direct observation~~
~~(i) ECS-1 electronic control and status panel~~	~~(1) ratio of process unit/solenoid valve time less than nine tenths (0.90) *~~	~~direct measurement/ observation~~

~~* When the identified defect is detected in the listed equipment, the defect determination applies to all affected interrelated systems (which may include all systems at the motor vehicle fueling operation).~~

~~G-70-165 series Healy Model 600~~		
~~equipment~~	~~defects~~	~~verification procedure~~
~~(a) nozzles~~	~~(1) any nozzle with a vapor guard missing, damaged such that a slit from the outer edge of the open end flange to the spout anchor clamp, or which has equivalent cumulative damage~~	~~direct observation~~
	~~(2) any nozzle which has fewer than four unblocked vapor collection holes~~	~~direct observation~~
	~~(3) defective vapor valve~~	~~EO G-70-183 Exhibit 2 vapor valve test or equivalent~~
	~~(4) any grade of a fueling point not capable of demonstrating an air to liquid ratio compliance with its performance standard~~	~~TP201.5 or equivalent~~
	~~(5) any fueling point associated with a vapor line disconnected and open to the atmosphere, including all fueling points at the facility if vapor lines are manifolded~~	~~direct observation~~
~~(b) system~~	~~(1) system not in compliance with the static pressure decay test criteria *~~	~~TP201.3 or equivalent~~
	~~(2) pressure drop through the system exceeds one-half (0.50) inch water column at sixty cubic feet per hour (60 CFH)~~	~~TP201.4 or equivalent~~
~~(c) central vacuum unit~~	~~(1) dispensing when the central vacuum unit is disabled *~~	~~direct measurement/ observation/system monitor observation~~
	~~(2) vacuum level outside of the range specified in G-70-165 for more than fifteen (15) seconds (Approval Letter 97-20), measured while dispensing is occurring *~~	~~direct measurement/ observation/system monitor observation~~
	~~(3) product dispensed when the vapor return line valve is closed~~	~~direct measurement/ observation/TP201.5~~

~~* When the identified defect is detected in the listed equipment, the defect determination applies to all affected interrelated systems (which may include all systems at the motor vehicle fueling operation).~~

~~G-70-169 series Franklin Electric Intellivac~~		
~~equipment~~	~~defects~~	~~verification procedure~~
~~(a) system~~	~~(1) any grade of a fueling point not capable of demonstrating an air to liquid ratio compliance with its performance standard~~	~~TP201.5 or equivalent~~
	~~(2) any fueling point associated with a vapor line disconnected and open to the atmosphere, including all fueling points at the facility if vapor lines are manifolded~~	~~direct observation~~
	~~(3) system not in compliance with the static pressure decay test criteria *~~	~~TP201.3 or equivalent~~
	~~(4) pressure drop through the system exceeds one-half (0.50) inch water column at sixty cubic feet per hour (60 CFH)~~	~~TP201.4 or equivalent~~
	~~(5) defective vapor valve~~	~~GDF-01/GDF-02~~
~~(b) OPW 11VAI nozzle~~	~~(1) efficiency compliance device damaged such that at least one-fourth (25%) of the circumference is missing~~	~~direct measurement/ observation~~
	~~(2) fewer than two unblocked vapor collection holes~~	~~direct observation~~
~~(c) Husky V34 6250 nozzle~~	~~(1) any nozzle with a vapor splash guard (VSG) damaged such that at least one and one-half (1.5) inch slit has developed~~	~~direct measurement~~
	~~(2) any VSG damaged such that greater than a three-eighths (0.38) inch hole has developed~~	~~direct measurement~~

~~* When the identified defect is detected in the listed equipment, the defect determination applies to all affected interrelated systems (which may include all systems at the motor vehicle fueling operation).~~

G-70-175 series Hasstech VCP-3A AST		
equipment	defects	verification procedure
(a) system	(1) any fueling point associated with a vapor line disconnected and open to the atmosphere, including all fueling points at the facility if vapor lines are manifolded	direct observation
	(2) system not in compliance with the static pressure decay test criteria *	TP201.3 or equivalent
	(3) pressure drop through the system exceeds one-half (0.50) inch water column at sixty cubic feet per hour (60 CFH)	TP201.4 or equivalent
(b) OPW 11VAI steel spout	(1) less than six unblocked vapor collection holes	direct observation
(c) OPW 11VAI aluminum spout	(1) less than four unblocked vapor collection holes	direct observation
(d) Emco Wheaton A4500 nozzle	(1) fewer than three unblocked vapor collection holes	direct observation
	(2) any visible puncture or tear of the vapor guard/vapor seal assembly	direct observation
(e) Husky V3 6201 nozzle	(1) all vapor collection holes blocked	direct observation
(f) Husky V34 6200-8	(1) all vapor collection holes blocked	direct observation
	(2) defective vapor valve	GDF-01/GDF-02
(g) collection unit	(1) any grade of a fueling point not capable of demonstrating an air to liquid ratio compliance with its performance standard	TP201.5 or equivalent
	(2) dispensing when the collection unit is disabled *	direct observation/ system monitor observation
	(3) normal operating level at the inlet of the collection unit less than thirty (30) inches water column vacuum *	direct measurement/ observation
(h) processing unit	(1) twenty (20) consecutive unsuccessful attempts to ignite the processing unit *	direct measurement/ observation/ system monitor observation
	(2) emissions which exceed Ringelmann one-half (½) or ten percent (10%) opacity and not attributable to a bulk delivery *	Method 9
	(3) dispensing when the processing unit is disabled *	direct measurement/ observation/system monitor observation
	(4) processing unit inoperative *	direct observation
(i) ECS-1 electronic control and status panel	(1) ratio of process unit/solenoid valve time less than nine tenths (0.90) *	direct measurement/ observation

* When the identified defect is detected in the listed equipment, the defect determination applies to all affected interrelated systems (which may include all systems at the motor vehicle fueling operation)~~.~~

G-70-177 series Hirt VCS400-7		
equipment	defects	verification procedure
(a) system	(1) any fueling point associated with a vapor line disconnected and open to the atmosphere, including all fueling points at the facility if vapor lines are manifolded	direct observation
	(2) pressure drop through the system exceeds one-half (0.50) inch water column at sixty cubic feet per hour (60 CFH)	TP201.4 or equivalent
	(3) any grade of a fueling point not capable of demonstrating an air to liquid ratio compliance with its performance standard	TP201.5 or equivalent
	(4) processing unit inoperative *	direct observation
(b) OPW 11VA-29 nozzle	(1) defective vapor valve	GDF-01/GDF-02
	(2) less than five unblocked vapor collection holes	direct observation
(c) hoses	(1) any visible puncture or tear equivalent to a diameter of 0.136 inches or greater	direct measurement/ observation

* When the identified defect is detected in the listed equipment, the defect determination applies to all affected interrelated systems (which may include all systems at the motor vehicle fueling operation).

~~G-70-179 series Catlow ICVN-VI~~		
~~equipment~~	~~defects~~	~~verification procedure~~
~~(a) nozzles~~	~~(1) efficiency compliance device damaged such that at least three-fourths (75%) of the diameter is missing~~	~~direct measurement/ observation~~
	~~(2) any nozzle which has less than four unblocked vapor collection holes~~	~~direct observation~~
	~~(3) defective vapor valve~~	~~GDF-01/GDF-02~~
~~(b) system~~	~~(1) any grade of a fueling point not capable of demonstrating an air to liquid ratio compliance with its performance standard~~	~~TP201.5 or equivalent~~
	~~(2) any fueling point associated with a vapor line disconnected and open to the atmosphere, including all fueling points at the facility if vapor lines are manifolded~~	~~direct observation~~
	~~(3) system not in compliance with the static pressure decay test criteria *~~	~~TP201.3 or equivalent~~
	~~(4) pressure drop through the system exceeds one-half (0.50) inch water column at sixty cubic feet per hour (60 CFH)~~	~~TP201.4 or equivalent~~

~~* When the identified defect is detected in the listed equipment, the defect determination applies to all affected interrelated systems (which may include all systems at the motor vehicle fueling operation).~~

G-70-181 series Hirt VCS400-7 AGT (AST)		
equipment	defects	verification procedure
(a) system	(1) any fueling point associated with a vapor line disconnected and open to the atmosphere, including all fueling points at the facility if vapor lines are manifolded	direct observation
	(2) pressure drop through the system exceeds one-half (0.50) inch water column at sixty cubic feet per hour (60 CFH)	TP201.4 or equivalent
	(3) any grade of a fueling point not capable of demonstrating an air to liquid ratio compliance with its performance standard	TP201.5 or equivalent
	(4) processing unit inoperative *	direct observation
(b) OPW 11VA-29 nozzle	(1) defective vapor valve	GDF-01/GDF-02
	(2) less than five unblocked vapor collection holes	direct observation
(c) hoses	(1) any visible puncture or tear equivalent to a diameter of 0.136 inches or greater	direct measurement/ observation

* When the identified defect is detected in the listed equipment, the defect determination applies to all affected interrelated systems (which may include all systems at the motor vehicle fueling operation).

~~G-70-183 series Healy/Franklin Vac Assist~~		
~~equipment~~	~~defects~~	~~Verification procedure~~
~~(a) nozzles~~	~~(1) a vapor guard damaged such that a slit exists from the outer edge of the open end flange to the spout anchor clamp~~	~~direct observation~~
	~~(2) any nozzle which has less than four unblocked vapor collection holes~~	~~direct observation~~
	~~(3) defective vapor valve~~	~~EO G-70-183 Exhibit 2 vapor valve test or equivalent~~
~~(b) system~~	~~(1) any grade of a fueling point not capable of demonstrating an air to liquid ratio compliance with its performance standard~~	~~TP201.5 or equivalent~~
	~~(2) any fueling point associated with a vapor line disconnected and open to the atmosphere, including all fueling points at the facility if vapor lines are manifolded~~	~~direct observation~~
	~~(3) system not in compliance with the static pressure decay test criteria *~~	~~TP201.3 or equivalent~~
	~~(4) pressure drop through the system exceeds one-half (0.50) inch water column at sixty cubic feet per hour (60 CFH)~~	~~TP201.4 or equivalent~~

~~* When the identified defect is detected in the listed equipment, the defect determination applies to all affected interrelated systems (which may include all systems at the motor vehicle fueling operation).~~

~~G-70-186 series Healy Model 400 ORVR~~		
~~equipment~~	~~defects~~	~~verification procedure~~
~~(a) nozzles~~	~~(1) any operating pressure range at the nozzle boot/fill-pipe interface less than one-half (0.50) inch water column vacuum or greater than one-fourth (0.25) inch water column pressure~~	~~EO G-70-186 Exhibit 5 test~~
	~~(2) defective vapor valve~~	~~EO G-70-191 Exhibit 2 vapor valve test or equivalent~~
~~(b) central vacuum unit~~	~~(1) product dispensed when the central vacuum unit is inoperative or disabled *~~	~~direct measurement/ observation/TP201.5 or equivalent system monitor observation~~
	~~(2) system does not achieve an operating vacuum of sixty-five (65) inches water column for three consecutive dispensings under normal operating conditions *~~	~~direct measurement/ observation/system monitor observation~~
	~~(3) system operates at a vacuum less than sixty-five (65) inches water column over a one hour period *~~	~~direct measurement/ observation/system monitor observation~~
	~~(4) vacuum level dropping below sixty (60) inches water column for more than three seconds after the system has reached sixty-five (65) inches water column, while dispensing is occurring *~~	~~direct measurement/ observation/system monitor observation~~
	~~(5) vacuum level above ninety (90) inches water column while dispensing is occurring *~~	~~direct measurement/ observation/system monitor observation~~
	~~(6) product dispensing when the non-restrictive ball valve installed in the vapor return line is closed *~~	~~direct measurement/ observation~~
~~(c) system~~	~~(1) any fueling point associated with a vapor line disconnected and open to the atmosphere, including all fueling points at the facility if vapor lines are manifolded~~	~~direct observation~~
	~~(2) system not in compliance with the static pressure decay test criteria *~~	~~TP201.3 or equivalent~~
	~~(3) pressure drop through the system exceeds one-half (0.50) inch water column at sixty cubic feet per hour (60 CFH)~~	~~TP201.4 or equivalent~~
	~~(4) any venting through system monitor vent in excess of ten hours in any calendar day not attributable to a Phase I fuel delivery *~~	~~observation/system monitor observation~~

~~* When the identified defect is detected in the listed equipment, the defect determination applies to all affected interrelated systems (which may include all systems at the motor vehicle fueling operation).~~

G-70-187 series Healy Model 400 ORVR AGT (AST)		
equipment	defects:	verification procedure
(a) nozzles	(1) any operating pressure range at the nozzle boot/fill-pipe interface less than one-half (0.50) inch water column vacuum or greater than one-fourth (0.25) inch water column pressure	EO G-70-187 Exhibit 5 test
	(2) defective vapor valve	EO G-70-191 Exhibit 2 vapor valve test or equivalent
	(3) any nozzle boot with a concatenation of all tears greater than one-half (0.50) inch in length	direct measurement/ observation
(b) central vacuum unit	(1) product dispensed when the central vacuum unit is inoperative or disabled *	direct measurement/ observation/TP201.5 or equivalent system monitor observation
	(2) system does not achieve an operating vacuum of sixty-five (65) inches water column for three consecutive dispensing episodes *	direct measurement/ observation/system monitor observation
	(3) system does not achieve an operating vacuum of sixty-five (65) inches water column within a one hour period for any single dispensing episode *	direct measurement/ observation/system monitor observation
	(4) vacuum level dropping below sixty (60) inches water column for more than three seconds after the system has reached sixty-five (65) inches water column, while dispensing is occurring *	direct measurement/ observation/system monitor observation
	(5) vacuum level above ninety (90) inches water column while dispensing is occurring *	direct measurement/ observation/system monitor observation
	(6) product dispensing when the non-restrictive ball valve installed in the vapor return line is closed *	direct measurement/ observation
(c) system	(1) any fueling point associated with a vapor line disconnected and open to the atmosphere, including all fueling points at the facility if vapor lines are manifolded	direct observation
	(2) system not in compliance with the static pressure decay test criteria *	TP201.3 or equivalent
	(3) pressure drop through the system exceeds one-half (0.50) inch water column at sixty cubic feet per hour (60 CFH)	TP201.4 or equivalent
	(4) any venting through system monitor vent in excess of ten hours in any calendar day not attributable to a Phase I fuel delivery *	direct measurement/ observation/system monitor observation

* When the identified defect is detected in the listed equipment, the defect determination applies to all affected interrelated systems (which may include all systems at the motor vehicle fueling operation).

~~G-70-188 series Catlow ICVN w/Gilbarco (Marconi) VaporVac System~~		
~~equipment~~	~~defects~~	~~verification procedure~~
~~(a) nozzles~~	~~(1) ECD damaged such that at least three-fourths (75%) of the diameter is missing~~	~~direct measurement/ observation~~
	~~(2) defective vapor valve~~	~~GDF-01/GDF-02~~
~~(b) system~~	~~(1) any grade of a fueling point not capable of demonstrating an air to liquid ratio compliance with its performance standard~~	~~TP201.5 or equivalent~~
	~~(2) any fueling point associated with a vapor line disconnected and open to the atmosphere, including all fueling points at the facility if vapor lines are manifolded~~	~~direct observation~~
	~~(3) system not in compliance with the static pressure decay test criteria *~~	~~TP201.3 or equivalent~~
	~~(4) pressure drop through the system exceeds one-half (0.50) inch water column at sixty cubic feet per hour (60 CFH)~~	~~TP201.4 or equivalent~~

~~* When the identified defect is detected in the listed equipment, the defect determination applies to all affected interrelated systems (which may include all systems at the motor vehicle fueling operation).~~

G-70-191 series Healy ORVR		
equipment	defects	verification procedure
(a) nozzles	(1) any Healy model 800 nozzle with a vapor collection boot which has one-half (50%) of the mini-boot faceplate or greater missing	direct measurement/ observation
	(2) defective vapor valve	EO G-70-191 Exhibit 2 vapor valve test or equivalent
(b) system	(1) any grade of a fueling point not capable of demonstrating an air to liquid ratio compliance with its performance standard	TP201.5 or equivalent
	(2) any fueling point associated with a vapor line disconnected and open to the atmosphere, including all fueling points at the facility if vapor lines are manifolded	direct observation
	(3) system not in compliance with the static pressure decay test criteria *	TP201.3 or equivalent
	(4) pressure drop through the system exceeds one-half (0.50) inch water column at sixty cubic feet per hour (60 CFH)	TP201.4 or equivalent
	(5) inoperative vapor pumps *	direct observation in accordance with the Healy IOMM

* When the identified defect is detected in the listed equipment, the defect determination applies to all affected interrelated systems (which may include all systems at the motor vehicle fueling operation).

G-70-193 series Hill-Vac AST		
equipment	defects	verification procedure
(a) system	(1) fillpipe gauge pressure less than negative one (–1.0) inch or greater than two (2.0) inches water column	direct measurement/ observation
	(2) any fueling point associated with a vapor line disconnected and open to the atmosphere, including all fueling points at the facility if vapor lines are manifolded	direct observation
	(3) system not in compliance with the static pressure decay test criteria *	TP201.3 or equivalent
	(4) pressure drop through the system exceeds one-half (0.50) inch water column at sixty cubic feet per hour (60 CFH)	TP201.4 or equivalent
(b) nozzles	(1) a boot with any tear exceeding one-half (0.50) inch	direct measurement/ observation
	(2) faceplate damage such that the fillpipe interface is adversely affected for twenty-five percent (25%) or more of the circumference of the faceplate	direct measurement/ observation
(c) jet pump	(1) dispensing of gasoline when either jet pump is disabled	direct observation
	(2) failure to achieve operating vacuum of thirty-five (35) inches water column within five seconds after the system is activated, for three consecutive dispensing episodes	direct measurement/ observation
	(3) a vacuum level below fifteen (15) inches water column for more than three seconds after the system has reached thirty-five (35) inches water column while dispensing	direct measurement/ observation
	(4) a vacuum level above eighty-five (85) inches water column measured while dispensing to non-ORVR vehicles	direct measurement/ observation
	(5) product dispensing when any ball valve installed at the vapor return line connection to each Healy Model 100 jet pump is closed	direct measurement/ observation
(d) Liquid drop out pot	(1) opening drain valve at anytime other than when repair operations are underway	direct observation
	(2) product dispensing when any ball valve installed at the liquid drop pot in the liquid removal line is closed	direct measurement/ observation

* When the identified defect is detected in the listed equipment, the defect determination applies to all affected interrelated systems (which may include all systems at the motor vehicle fueling operation).

~~G-70-196 series SaberVac~~		
~~equipment~~	~~Defects~~	~~verification procedure~~
~~(a) Husky 605104 nozzle~~	~~(1) vapor splash guard (VSG) with a one and one-half (1.5) inch or larger slit~~	~~Direct measurement/ observation~~
	~~(2) VSG with a three-sixteenths (0.19) inch or larger hole~~	~~Direct measurement/ observation~~
	~~(3) the VSG flange portion doesn't make contact with entire fillpipe opening~~	~~direct observation~~
	~~(4) defective vapor valve~~	~~GDF-01/GDF-02~~
~~(b) system~~	~~(1) any grade of a fueling point not capable of demonstrating an air to liquid ratio compliance with its performance standard as described in G-70-196~~	~~as described in G-70-196~~
	~~(2) any fueling point associated with a vapor line disconnected and open to the atmosphere, including all fueling points at the facility if vapor lines are manifolded~~	~~direct observation~~
	~~(3) system not in compliance with the static pressure decay test criteria *~~	~~TP201.3 or equivalent~~
	~~(4) underground storage tank gauge pressure greater than two inches water column over an extended period as defined by E.O. G-70-196 Exhibit 2 *~~	~~direct measurement/ observation~~
	~~(5) pressure drop through system exceeding one-half (0.50) inch water column at sixty cubic feet per hour (60 CFH)~~	~~TP201.4 or equivalent~~
	~~(6) dispensing of product from any fueling point associated with a disconnected vapor line~~	~~direct measurement/ observation~~

~~* When the identified defect is detected in the listed equipment, the defect determination applies to all affected interrelated systems (which may include all systems at the motor vehicle fueling operation).~~

G-70-200 series Oldcastle Buried Vapor Return Piping AST G-70-201 series Oldcastle Trenched Vapor Return Piping AST		
equipment	defects	verification procedure
(a) nozzles	(1) any nozzle boot torn in one or more of the following manners: a triangular-shaped or similar tear one-half (0.50) inch or more on any side, or hole one-half (0.50) inch or more in diameter, or slit one (1.0) inch or more in length	direct measurement/ observation
	(2) any faceplate or flexible cone damaged in the following manner: for balance nozzles and for nozzles for aspirator and eductor assist type systems, damage such that the capability to achieve a seal with a fill pipe interface is affected for one-fourth (25%) of the circumference of the faceplate (accumulated)	direct measurement/ observation
	(3) flexible cone damaged in the following manner: for booted type nozzles for vacuum assist-type systems, more than one-fourth (25%) of the flexible cone missing	direct measurement/ observation
	(4) insertion interlock mechanism which will allow dispensing when the bellow is uncompressed	direct observation/ GDF-09
(b) hoses	(1) any coaxial balance hose with 100 ml or more liquid in the vapor path	direct measurement
	(2) any hose with a visible opening	direct observation
(c) processing unit	(1) vapor processing unit inoperative *	direct observation

* When the identified defect is detected in the listed equipment, the defect determination applies to all affected interrelated systems (which may include all systems at the motor vehicle fueling operation).

G-70-202 series Gilbarco Vapor Vac AST		
equipment	defects	verification procedure
(a) system	(1) any fueling point associated with a vapor line disconnected and open to the atmosphere, including all fueling points at the facility if vapor lines are manifolded	direct observation
	(2) both booted and unbooted nozzle types connected to the same vapor pump	direct observation
	(3) any grade of a fueling point not capable of demonstrating an air to liquid ratio compliance with its performance standard	TP201.5 or equivalent
(b) Catlow ICVN nozzle	(1) less than three unblocked vapor holes	direct observation
	(2) defective vapor valve	GDF-01/GDF-02
	(3) efficiency compliance device slit from base to the rim	direct observation
(c) Emco Wheaton A4505 nozzle	(1) less than three unblocked vapor holes	direct observation
	(2) defective vapor valve	GDF-01/GDF-02
	(3) one-eighth (13%) of vapor guard circumference missing	direct measurement/ observation
(d) Emco Wheaton A4500 nozzle	(1) less than three unblocked vapor holes	direct observation
(e) Husky V34 6250 nozzle	(1) a one and one-half (1.5) inch or greater slit in vapor splash guard	direct measurement/ observation
	(2) any hole greater than three-eighths (0.38) inch in vapor splash guard	direct measurement/ observation
	(3) defective vapor valve	GDF-01/GDF-02
(f) Husky V3 6201 nozzle	(1) all vapor holes blocked	direct observation
(g) OPW 11VAI nozzle	(1) less than four unblocked vapor holes	direct observation
(h) OPW12VW nozzle	(1) all vapor holes blocked	direct observation
	(2) defective vapor valve	GDF-01/GDF-02
	(3) vapor escape guard with three-fourths (75%) of the circumference missing	direct measurement/ observation

G-70-204 series Gilbarco Vapor Vac/OPW Vaporsaver		
equipment	defects	verification procedure
(a) system	(1) pressure drop through the system exceeds one-half (0.50) inch water column at sixty cubic feet per hour (60 CFH) *	TP201.4 or equivalent
	(2) any fueling point associated with a vapor line disconnected and open to the atmosphere, including all fueling points at the facility if vapor lines are manifolded	direct observation
	(3) system not in compliance with the static pressure decay test criteria *	TP201.3 or equivalent
	(4) any grade of a fueling point not capable of demonstrating an air to liquid ratio compliance with its performance standard	TP201.5 or equivalent
	(5) defective vapor valve	GDF-01/GDF-02
(b) Catlow ICVN nozzle	(1) less than three unblocked vapor holes	direct observation
	(2) efficiency compliance device slit from base to the rim	direct observation
(c) Emco Wheaton A4505 nozzle	(1) less than three unblocked vapor holes	direct observation
	(2) one-eighth (1/8) of vapor guard circumference missing or equivalent cumulative damage	direct measurement/ observation
(d) Husky V34 6250 nozzle	(1) a one and one-half (1.5) inch or greater slit in vapor splash guard or equivalent cumulative damage	direct measurement/ observation
	(2) any hole greater than three-eighths (3/8) inch in vapor splash guard or equivalent cumulative damage	direct measurement/ observation
(e) OPW12VW nozzle	(1) all vapor holes blocked	direct observation
	(2) vapor escape guard with three-fourths (3/4) of the circumference missing or equivalent cumulative damage	direct measurement/ observation
(f) vapor processor	(1) vapor processor inoperative for more than 24 consecutive hours *	direct observation/ G-70-204 Exhibit 2

* When the identified defect is detected in the listed equipment, the defect determination applies to all affected interrelated systems (which may include all systems at the motor vehicle fueling operation).

G-70-209 series Dresser/Wayne Vac/Arid Technologies Permeator		
equipment	defects	verification procedure
(a) system	(1) any splash guard that interferes with the operation of a vapor escape guard (VEG) or vapor splash guard (VSG) unit	direct measurement/ observation
	(2) any grade of a fueling point not capable of demonstrating an air to liquid ratio compliance with its performance standard	TP201.5, G-70-209 Exhibit 5, or equivalent
	(3) any fueling point associated with a vapor line disconnected and open to the atmosphere, including all fueling points at the facility if vapor lines are manifolded	direct observation
	(4) system not in compliance with the static pressure decay test criteria *	TP201.3 or equivalent
	(5) pressure drop through the system exceeds one-half (0.50) inch water column at sixty cubic feet per hour (60 CFH)	TP201.4 or equivalent
	(6) defective vapor valve	GDF-01/GDF-02
(b) permeator	(1) permeator inoperative for more than 24 consecutive hours	direct observation/
(c) OPW 12VW nozzle	(1) all vapor holes blocked	direct observation
	(2) any VEG damaged such that at least three-quarters (75%) of the circumference is missing	direct measurement/ observation
(d) Husky V34 6250 nozzle	(1) any VSG damaged such that at least a one and one-half (1.5) inch slit has developed	direct measurement/ observation
	(2) any VSG flange portion that does not make contact with or cover the entire fill-pipe opening	direct measurement/ observation
	(3) any VSG with a hole greater than three-eighths (0.38) inch	direct measurement/ observation
(e) Emco Wheaton A4505 nozzle	(1) less than three unblocked vapor holes	direct observation
	(2) any vapor guard (VG) damaged such that at least one-eighth (13%) of the circumference is missing	direct measurement/ observation
(f) Catlow ICVN and Richards Astrovac nozzles	(1) less than three unblocked vapor holes	direct observation
	(2) any efficiency compliance device damaged with a slit from the base to the rim	direct observation

* When the identified defect is detected in the listed equipment, the defect determination applies to all affected interrelated systems (which may include all systems at the motor vehicle fueling operation).

VR-201 series Healy Phase II EVR System		
Equipment	defects	verification procedure
(a) nozzles	(1) defective vapor valve	TP-201.2B or equivalent or VR-201 Exhibit 7
	(2) any fueling point whose V/L ratio is determined to be at or below 0.80	VR-201 Exhibit 5
(b) system	(1) inoperative vapor pumps *	direct observation in accordance with the Healy Phase II EVR System Including Veeder-Root ISD IOMM
(b) clean air separator	(1) clean air separator static pressure performance failure *	VR-201 Exhibit 4
	(2) clean air separator not in the proper operating configuration *	direct observation shown in VR-201 Figure 2B-5
(c) dispenser	(1) any dispenser with a dispenser piping test valve in the closed position	direct observation

* When the identified defect is detected in the listed equipment, the defect determination applies to all affected interrelated systems (which may include all systems at the motor vehicle fueling operation).

VR-202 series Healy Phase II EVR System with Veeder-Root ISD		
Equipment	defects	verification procedure
(a) nozzles	(1) defective vapor valve	TP-201.2B or equivalent or VR-202 Exhibit 7
	(2) any fueling point whose V/L ratio is determined to be at or below 0.80	VR-202 Exhibit 5
(b) system	(1) inoperative vapor pumps *	direct observation in accordance with the Healy Phase II EVR System Including Veeder-Root ISD IOMM
(c) clean air separator	(1) clean air separator static pressure performance failure *	VR-202 Exhibit 4
	(2) clean air separator not in the proper operating configuration *	direct observation shown in VR-202 Figure 2B-5
(d) dispenser	(1) any dispenser with a dispenser piping test valve in the closed position	direct observation

* When the identified defect is detected in the listed equipment, the defect determination applies to all affected interrelated systems (which may include all systems at the motor vehicle fueling operation).

Defect Identification Methods Used In the Verification Procedure Column

1. TP201.5: Determination (by Volume Meter) of Air to Liquid (A/L) Volume Ratio of Vapor Recovery Systems of Dispensing Facilities, Adopted April 12, 1996

2. TP201.4: Determination of Dynamic Pressure Performance of Vapor Recovery Systems of Dispensing Facilities

3. TP201.3: Determination of Two-Inch WC Static Pressure Performance of Vapor Recovery Systems of Dispensing Facilities

4. GDF-01: Bag Test for Multi-Nozzle Vacuum Assist Systems

5. Method 9: 40 Code Federal Regulations Part 60 Appendix A: Reference Method 9/ EPA Section 3.12 Visible Determination of the Opacity of Emissions from Stationary Sources

6. G-70-~~186~~-187 Exhibit 5: Fillneck Vapor Pressure Regulation Fueling Test

7. EPO No. 26-F-1: Vapor Recovery Systems Field Compliance Testing

~~8. Storage Tank Pressure Device: described and shown in TSD Appendix 6~~

~~9~~8. GDF-02: Bag Test for Single-Nozzle Vacuum Assist Systems

~~10~~9. GDF-09: Phase II Balance System Nozzle Insertion Interlock Operation Determination

10. G-70-191 Exhibit 2: Specifications for the Healy ORVR Phase II Vapor Recovery System (4.a-4.d)

11. G-70-204 Exhibit 2: System Specifications/Vaporsaver (1.A-1.D)

12. G-70-209 Exhibit 5: Determination (by Volume Meter) of Air to Liquid Volume Ratio of Vapor Recovery Systems of Dispensing Facilities

13. VR-201 Exhibit 4: Determination of Static Pressure Performance of the Healy Clean Air Separator

14. VR-201 Exhibit 5: Vapor to Liquid Volume Ratio for Healy Phase II EVR System

15. VR-201 Exhibit 7: Nozzle Bag Test Procedure

16. VR-202 Exhibit 4: Determination of Static Pressure Performance of the Healy Clean Air Separator

17. VR-202 Exhibit 5: Vapor to Liquid Volume Ratio for Healy Phase II EVR System

18. VR-202 Exhibit 7: Nozzle Bag Test Procedure

this page intentionally left blank

Appendix 3: California Health and Safety Code, Section 41960.2

this page intentionally left blank

California Health and Safety Code

H&S 41960.2 Maintenance of Installed Systems

41960.2. (a) All installed systems for the control of gasoline vapors resulting from motor vehicle fueling operations shall be maintained in good working order in accordance with the manufacturer's specifications of the system certified pursuant to Section 41954.

(b) Whenever a gasoline vapor recovery control system is repaired or rebuilt by someone other than the original manufacturer or its authorized representative, the person shall permanently affix a plate to the vapor recovery control system that identifies the repairer or rebuilder and specifies that only certified equipment was used. In addition, a rebuilder of a vapor control system shall remove any identification of the original manufacturer if the removal does not affect the continued safety or performance of the vapor control system.

(c) (1) The executive officer of the state board shall identify and list equipment defects in systems for the control of gasoline vapors resulting from motor vehicle fueling operations that substantially impair the effectiveness of the systems in reducing air contaminants. The defects shall be identified and listed for each certified system and shall be specified in the applicable certification documents for each system.

(2) On or before January 1, 2001, and at least once every three years thereafter, the list required to be prepared pursuant to paragraph (1) shall be reviewed by the executive officer at a public workshop to determine whether the list requires an update to reflect changes in equipment technology or performance.

(3) Notwithstanding the timeframes for the executive officer's review of the list, as specified in paragraph (2), the executive officer may initiate a public review of the list upon a written request that demonstrates, to the satisfaction of the executive officer, the need for such a review. If the executive officer determines that an update is required, the update shall be completed no later than 12 months after the date of the determination.

(d) When a district determines that a component contains a defect specified pursuant to subdivision (c), the district shall mark the component "Out of Order." No person shall use or permit the use of the component until the component has been repaired, replaced, or adjusted, as necessary, and the district has reinspected the component or has authorized use of the component pending reinspection.

(e) Where a district determines that a component is not in good working order but does not contain a defect specified pursuant to subdivision(c), the district shall provide the operator with a notice specifying the basis on which the component is not in good working order. If, within seven days, the operator provides the district with adequate evidence that the component is in good working order, the operator shall not be subject to liability under this division.

(Amended by Stats. 1999, Ch. 501, Sec. 1.)

References at the time of publication (see page iii):

Regulations: 17, CCR, sections 94006, 94010, 94011