California Environmental Protection Agency

Air Resources Board

Vapor Recovery Certification Procedure

CP - 206

Certification Procedure for Vapor Recovery Systems at Gasoline Dispensing Facilities Using Aboveground Storage Tanks

Adopted: May 2, 2008
Amended: July 26, 2012

Note: The text is shown in ~~strikeout~~ to indicate that it is proposed for deletion and underline to indicate that it is proposed for addition. [Bracketed text] is not part of the proposed amendment.

CP-206
TABLE OF CONTENTS

SECTION **PAGE**

1. GENERAL INFORMATION AND APPLICABILITY 1
1.1 Legislative and Regulatory Requirements of Other State Agencies 1
1.2 Requirement to Comply with All Other Applicable Codes and Regulations 2
1.3 System Certification Matrix 2

2. PERFORMANCE STANDARDS AND SPECIFICATIONS 3
2.1 Performance Standards 4
2.2 Performance Specifications 4
2.3 Innovative System 4
2.4 Additional or Amended Performance Standards or Performance Specifications 4
2.5 Reference to CP-201 6

3. STANDING LOSS CONTROL PERFORMANCE STANDARDS AND SPECIFICATIONS 7
3.1 Standing Loss Control Emission Factor 7
3.2 Optional Standing Loss Control Emission Factor for Existing Installations 8
3.3 Temperature Attenuation Loss Emission Factor 9
3.4 Processor Emission Factor 9
3.5 Temperature Attenuation and Processor Emission Factor 10
3.6 Pressure/Vacuum Vent Valve 10

4. PHASE I PERFORMANCE STANDARDS AND SPECIFICATIONS 122
4.1 Phase I Efficiency / Emission Factor 13
4.2 Static Pressure Performance 13
4.3 Phase I Drop-Tubes with Over-Fill Prevention Devices (Top-Fill Application) 144
4.4 Phase I Product and Vapor Adaptors 14
4.5 Spill Container 155
4.6 Vapor Connections, Fittings, Emergency Vents, Tank Gauges 155
4.7 Materials Compatibility with Fuel Blends 15
4.8 Dedicated Gauging Port ~~with Drop Tube~~ 15
4.9 Compatibility of Phase I System with Standing Loss Control System 16

5. PHASE II PERFORMANCE STANDARDS AND SPECIFICATIONS APPLICABLE TO AST PHASE II VAPOR RECOVERY SYSTEMS 18
5.1 Phase II Emission Factor/Efficiency 20
5.2 Static Pressure Performance 20
5.3 Spillage 20
5.4 Compatibility of Phase II Systems with Vehicles Equipped with ORVR Systems 21
5.5 Compatibility of Phase II Systems with Phase I Systems 22
5.6 Compatibility of Phase II Systems with Standing Loss Control System 22
5.7 Nozzle Criteria 23
5.8 Liquid Retention 23
5.9 Nozzle/Dispenser Compatibility 24
5.10 Unihose Multi-Product Dispenser (MPD) Configuration 23

SECTION **PAGE**

5.11 Coaxial Hose Routing Configurations 24

5.12 Vapor Return Piping 25
5.13 Liquid Condensate Traps 25
5.14 Connections and Fittings 26

6. PHASE II PERFORMANCE STANDARDS AND SPECIFICATIONS APPLICABLE TO BALANCE VAPOR RECOVERY SYSTEMS 30
6.1 Balance Nozzle Criteria 31
6.2 Dynamic Pressure Drop Criteria for Balance Systems 31
6.3 Liquid Removal Systems 31

7. PHASE II PERFORMANCE STANDARDS AND SPECIFICATIONS APPLICABLE TO ALL ASSIST VAPOR RECOVERY SYSTEMS 33
7.1 Nozzle Criteria 33
7.2 Air to Liquid Ratio 34

8. PHASE II PERFORMANCE STANDARDS AND SPECIFICATIONS APPLICABLE TO ASSIST SYSTEMS UTILIZING A CENTRAL VACUUM UNIT 35
8.1 Vacuum Levels Generated by the Collection Device 35
8.2 Maximum Number of Refueling Points per Vacuum Device 35

9. PHASE II PERFORMANCE STANDARDS AND SPECIFICATIONS APPLICABLE TO SYSTEMS UTILIZING A DESTRUCTIVE OR NON-DESTRUCTIVE PROCESSOR 36
9.1 Processor Emission Factors 37
9.2 Hazardous Air Pollutants from Destructive Processors 37
9.3 Maximum Hydrocarbon Emissions from the Processor 37
9.4 Typical Load on the Processor 37
9.5 Processor Operation Time 38

10. IN-STATION DIAGNOSTIC SYSTEMS 38

11. CERTIFICATION OF VAPOR RECOVERY SYSTEMS 38
11.1 Certification Fees 38

12. APPLICATION PROCESS 39
12.1 Description of Vapor Recovery System 41
12.2 Description of In-Station Diagnostics (ISD) 42
12.3 Compatibility 43
12.4 Reliability of the System 43
12.5 Installation, Operation, and Maintenance of the System 44
12.6 Evidence of Financial Responsibility 44
12.7 Warranty 44
12.8 Test Station 44

SECTION **PAGE**

12.9 Notification of Certified System Component Manufacturers ~~Certification Holder.~~..43
12.10 Equipment Defect Identification and Test Protocols 45
12.11 Challenge Modes and Test Protocols 46
12.12 Number of Installations 46

12.13 Other Information……45

13. EVALUATION OF THE APPLICATION 47
13.1 Performance Standards and Specifications 47
13.2 Bench and Operational Testing Results 47
13.3 Evaluation of System Concept 47
13.4 Materials Specifications and Compatibility with Fuel Formulations 47
13.5 Installation, Operation, and Maintenance Manuals 47
13.6 Vapor Recovery Equipment Defect Identification 47
13.7 Challenge Mode Determination 48
13.8 Number of Configuration Determination……47

14. VAPOR RECOVERY SYSTEM CERTIFICATION TESTING 48
14.1 Test Site for Field Testing of Vapor Recovery Systems 50
14.2 Bench Testing of Components 52
14.3 Operational Test Duration 52
14.4 Equipment Defect and Challenge Mode Testing 52
14.5 Efficiency and/or Emission Factor Test 53
14.6 Vehicle Matrix 54

15. ALTERNATE TEST PROCEDURES AND INSPECTION PROCEDURES 55
15.1 Alternate Test Procedures for Certification Testing 55
15.2 Request for Approval of Alternate Test Procedure 55
15.3 Response to Request 55
15.4 Testing of Alternate Test Procedures 56
15.5 Documentation of Alternate Test Procedures 56
15.6 Inspection Procedures 56

16. DOCUMENTATION OF CERTIFICATION 57
16.1 Executive Order 57
16.2 Summary of Certification Process 57

17. DURATION AND CONDITIONS OF CERTIFICATION 57
17.1 Duration of System Certification 57
17.2 One Vapor Recovery System per AST System 57
17.3 Certification Not Transferable 58
17.4 Financial Responsibility 58
17.5 Warranty 58
17.6 Installation, Operation, and Maintenance of the System 59
17.7 Identification of System Components 60

SECTION **PAGE**

17.8 Revocation of Certifications 60

18. CERTIFICATION RENEWAL 60
18.1 Request for Renewal 61
18.2 Review Request 62
18.3 Evaluation of System Deficiencies 62
18.4 Letter of Intent 62
18.5 Renewal of Executive Order 63
18.6 Denial of Executive Order Renewal 63

19. AMENDMENTS TO EXECUTIVE ORDERS 64
19.1 Request for Amendment 64
19.2 Review of the Request 64
19.3 Testing 66
19.4 Letter of Intent 67
19.5 Issuance of Executive Order 67

20. REPLACEMENT OF COMPONENTS OR PARTS OF A SYSTEM WITH A TERMINATED, REVOKED, SUPERSEEDED, OR EXPIRED CERTIFICATION . 67
20.1 Component and Replacement Parts 67
20.2 Component or Part Not Meeting Specifications 67
20.3 Component or Part Not Certified with System and Not Meeting Specifications ... 68
20.4 Procedure for Approval of Replacement Parts 68

21. REQUIREMENTS FOR, AND CERTIFICATION OF, LOW PERMEATION HOSES 68
21.1 Request for Certification 69
21.2 Hose Lengths 69
21.3 Identification of Certified Hose 70

LIST OF TABLES

Table	Title	Page
1-1	Vapor Recovery System Certification Matrix	2
2-1	Effective and Operative Dates for Standing Loss Control, Phase I, and Phase II Performance Standards	3
3-1	Standing Loss Control Performance Standards and Specifications	7
3-2	Standing Loss Control Vapor Recovery System Design Configurations	8
4-1	Phase I Performance Standards and Specifications Applicable to AST Phase I Vapor Recovery Systems	12
5-1	Phase II Performance Standards and Specifications Applicable to AST Phase II Vapor Recovery Systems	18
6-1	Phase II Performance Standards and Specifications Applicable to Phase II Balance Vapor Recovery Systems	30
7-1	Phase II Performance Standards and Specifications Applicable to All Phase II Vacuum Assist Systems	33
8-1	Phase II Performance Standards and Specifications Applicable to All Phase II Assist Systems Utilizing a Central Vacuum Unit	35
9-1	Phase II Performance Standards and Specifications Applicable to All Phase II Assist Systems Utilizing a Destructive Processor	36
9-2	Phase II Performance Standards and Specifications Applicable to All Phase II Assist Systems Utilizing a Non-Destructive Processor	37
12-1	Estimated Timeline for the Certification Application Process	40
18-1	Estimated Timeline for the Renewal Process	63

LIST OF FIGURES

Figure	Title	Page
4A	Phase I Adaptor Cam and Groove Standard	17
4B	Phase I Vapor Recovery Adaptor Cam and Groove Standard	17
5A	Top-Mount Dispenser for Aboveground Tank Phase II Vapor Recovery System	27
5B	End-Mount Dispenser For Aboveground Tank Phase II Vapor Recovery System	28
5C	Tank w/Adjacent Ground-Mount Dispenser and High Hang Hose Phase II Vapor Recovery System	29

California Environmental Protection Agency
Air Resources Board

Vapor Recovery Certification Procedure

CP-206

Certification Procedure for Vapor Recovery Systems At Gasoline Dispensing Facilities Using Aboveground Storage Tanks

A set of definitions common to all certification and test procedures are in:

D-200 Definitions for Vapor Recovery Procedures

For the purpose of this procedure, the term "ARB" or "CARB" refers to the California Air Resources Board, and the term "Executive Officer" refers to the ARB Executive Officer or his or her authorized representative or designate.

1. GENERAL INFORMATION AND APPLICABILITY

This document describes the procedure for evaluating and certifying Aboveground Storage Tanks (AST), Standing Loss Control, Phase I and Phase II vapor recovery systems, and components, used at Gasoline Dispensing Facilities (GDF). An ARB Executive Order certifying the system shall be issued only after all of the applicable certification requirements have been successfully completed.

This Certification Procedure, CP-206, is adopted pursuant to Section 41954 of the California Health and Safety Code (CH&SC) and is applicable to vapor recovery systems installed at GDFs using an AST for controlling gasoline vapors emitted during diurnal venting (Standing Loss Control), the re-fueling of aboveground storage tanks (Phase I), and the refueling of vehicle fuel tanks (Phase II). Vapor recovery systems are complete systems and components that shall include all associated ASTs, dispensers, piping, nozzles, couplers, processing units, and any other equipment or components necessary for Standing Loss Control or the control of gasoline vapors during Phase I or Phase II refueling operations at GDFs.

Below-grade vaulted tanks shall be certified under Certification Procedure, CP-201, as incorporated by reference in title 17, California Code of Regulations (CCR) section 94011.

1.1 Legislative and Regulatory Requirements of Other State Agencies

As required pursuant to sections 41955 and 41957 of the CH&SC, the Executive Officer shall coordinate this certification procedure with:

1.1.1 Department of Food and Agriculture,
Division of Measurement Standards (DMS)

1.1.2 Department of Forestry and Fire Protection
Office of the State Fire Marshal (SFM)

1.1.3 Department of Industrial Relations, Division of Occupational Safety and Health (DOSH)

Prior to certification of the vapor recovery system by the Executive Officer, the applicant shall submit plans and specifications for the system to each of these agencies. Certification testing by these agencies may be conducted concurrently with ARB certification testing; however, the approval of the SFM, DMS, and DOSH shall be a precondition to certification by ARB. The applicant is responsible for providing documentation of these approvals to ARB.

1.2 Requirement to Comply with All Other Applicable Codes and Regulations

Certification of a system by the Executive Officer does not exempt the system from compliance with other applicable codes and regulations such as state fire codes, weights and measures regulations, safety codes and regulations, and water quality regulations.

1.3 System Certification Matrix

The certification procedure is designed to provide system and component certifications and Executive Orders with options for levels of controls as specified in CP-206 or as requested by the applicant. The varying levels of control can be achieved through combinations of Standing Loss Control, Phase I and Phase II vapor recovery systems, certified independently or together, according to the matrix in Table 1-1. An applicant shall specify the certification matrix to be tested in the application. Compatibility between Standing Loss Control, Phase I, and/or Phase II vapor recovery systems shall be evaluated per Table 1-1.

Table 1-1
Vapor Recovery System Certification Matrix

	Vapor Recovery Systems			**Compatibility**
Standing Loss Control	**Phase I**	**Phase II**	**Low Permeation Hose[1]**	**Section(s)**
X				n/a
X	**X**			4.9 and 12.3
X	**X**	**X**	**X**	4.9, 5.5, 5.6, ~~and~~ 12.3, and 21

[1] May apply to hoses that are not part of a Phase II system

2. PERFORMANCE STANDARDS AND SPECIFICATIONS

Table 2-1
Effective and Operative Dates for Standing Loss Control, Phase I, and Phase II Performance Standards

Performance Type	Requirement	Sec.	Effective Date	Operative Date
Standing Loss Control	As Specified in Table 3-1	3	~~January 1, 2009~~ April 1, 2009	~~January 1, 2009~~ Same as effective date
All Phase I Standards and Specifications	As specified in Table 4-1	4	~~January 1, 2009~~ July 1, 2010	~~January 1, 2009~~ Same as effective date
ORVR Compatibility[1]	As specified in Section 5.4	5.4	~~January 1, 2009~~ Date when first ORVR Compatible System is certified	~~January 1, 2009~~ Same as effective date
Nozzle Criteria	Post Refueling Drips: ≤ 3 drops/refueling	5.7	~~January 1, 2009~~ Date when first nozzle is certified	~~January 1, 2009~~ Same as effective date
Liquid Retention Nozzle Spitting	≤ 100 ml/1,000 gals. dispensed ≤ 1.0 ml/nozzle/~~fueling~~ test	5.8	~~January 1, 2009~~ Date when first nozzle is certified	~~January 1, 2009~~ Same as effective date
Spillage (including drips from spout)	≤ 0.24 pounds/1,000 gals dispensed	5.3	~~January 1, 2009~~ Date when first nozzle is certified	~~January 1, 2009~~ Same as effective date
In-Station Diagnostics (ISD)	For GDF > 600,000gal/yr.[2]	10	~~January 1, 2009~~ Date when first ISD system is certified	~~January 1, 2009~~ Same as effective date
All other Phase II Standards and Specifications	As Specified in Tables 5-1, 6-1, 7-1, 8-1, 9-1, and 9-2	5,6,7,8,9	~~January 1, 2009~~ Date when first Phase II system is certified	~~January 1, 2009~~ Same as effective date
Low Permeation Hoses	Permeation rate ≤ 10.0 g/m^2/day as determined by UL 330(7th ed.)	21	Date when the first low permeation hose is certified	Same as effective date

(1) Effective January 1, 2001 state law requires the certification of only those systems that are ORVR compatible (Health and Safety Code Section 41954, as amended by Chapter 729, Statutes of 2000; Senate Bill 1300).

(2) GDFs ≤600,000 gal/yr are exempted from ISD requirements.

2.1 Performance Standards

A performance standard defines the minimum performance requirements for certification of any system, including associated components. An applicant may request certification to a performance standard that is more stringent than the minimum performance standard specified in CP-206. Ongoing compliance with all applicable performance standards, including any more stringent standards requested by the applicant, shall be demonstrated throughout certification testing.

2.2 Performance Specifications

A performance specification is an engineering requirement that relates to the proper operation of a specific system or component thereof. In addition to the performance specifications mandated in CP-206, an applicant may specify additional performance specifications for a system or component. An applicant may request certification to a performance specification that is more stringent than the minimum performance specification in CP-206. Ongoing compliance with all applicable performance specifications, including any more stringent specifications requested by the applicant, shall be demonstrated throughout certification testing.

2.3 Innovative System

The innovative system concept provides flexibility in the design of vapor recovery systems. A vapor recovery system that fails to comply with an identified performance standard or specification may qualify for consideration as an innovative system, provided that the system meets the primary emission factor/efficiency, complies with all other applicable requirements of certification, and the Executive Officer determines that the emission benefits of the innovation are greater than the consequences of failing to meet the identified standard or specification.

2.4 Additional or Amended Performance Standards or Performance Specifications

Whenever these Certification Procedures are amended to include additional or amended performance standards, any system that is certified as of the effective date of additional or amended standards shall remain certified until the operative date. Systems installed before the operative date of additional or amended standards may remain in use for the remainder of their useful life or for up to four years after the effective date of the new standard, whichever is shorter, provided the requirements of Section 20 are met.

Whenever these Certification Procedures are amended to include additional or amended performance specifications, a system shall remain certified until the Executive Order expiration date. A system that was installed before the operative date of additional or amended performance specifications may remain in use subject to the requirements of Section 18.

2.4.1 The effective and operative dates of adoption for all performance standards and specifications contained herein are specified in Table 2-1.

2.4.2 The operative dates of performance standards shall be the effective date of adoption of amended or additional performance standards, except as otherwise specified in Table 2-1. Certifications shall terminate on the operative date of amended or additional performance standards unless the Executive Officer determines that the system meets the amended or additional performance standards or specifications. Upon the operative date of the amended or additional performance standards, only systems complying with the amended or additional performance standards may be installed.

2.4.3 The operative dates of performance specifications are listed in Table 2-1. As of the operative date of amended or additional performance specifications, only systems complying with the amended or additional performance specifications may be installed.

2.4.4 When the Executive Officer determines that no Standing Loss Control, Phase I, or Phase II system has been certified or will not be commercially available by the operative dates specified in Table 2-1 of CP-206, the Executive Officer shall extend the operative date and may extend the effective date of amended or additional performance standards or specifications. If there is only one certified system to meet amended or additional standards, that system is considered to be commercially available if that system can be shipped within eight weeks of the receipt of an order by the equipment manufacturer.

2.4.5 **Any performance standard or specification with an effective date of January 1, 2012 or later shall become effective on the date when the first system is certified to meet the performance standard or specification. The Executive Officer shall maintain, and make available to the public, a current list of effective and operative dates for all standards and specifications.**

2.4.~~5~~**6** The Executive Officer may determine that a system certified prior to the operative date meets the amended or additional performance standards or specifications. In determining whether a previously certified system conforms to any additional or amended performance standards, specifications or other requirements adopted subsequent to certification of the system, the Executive Officer may consider any appropriate information, including data obtained in the previous certification testing of the system in lieu of new testing.

2.4.~~6~~**7** Gasoline Dispensing Facilities in districts that ARB determines are in attainment with the state standard for Ozone are exempted from the Enhanced Vapor Recovery performance standards and specifications set forth in Sections 3 through 10 inclusive, with the exception of the

requirement for compatibility with vehicles that are equipped with Onboard Refueling Vapor Recovery (ORVR) systems as specified in subsections 5.4. New GDFs, and those undergoing major modifications, are not exempt. If exempt facilities become subject to additional standards due to a subsequent reclassification of their district such that the district is no longer in attainment, the facilities will have four years to comply.

2.5 Reference to CP-201

This procedure refers to applicable performance standards and specifications of CP-201, Certification Procedure for Vapor Recovery Systems at Gasoline Dispensing Facilities as incorporated by reference into title 17, CCR section 94011. For the purpose of this procedure the term CP-201 shall mean the last adopted or amended version of CP-201 at the time that an Executive Order under CP-206 is issued.

3. STANDING LOSS CONTROL PERFORMANCE STANDARDS AND SPECIFICATIONS

Table 3-1 summarizes the Standing Loss Control Performance Standards and Specifications applicable to all ASTs that are not below-grade vaulted tanks.

Table 3-1
Standing Loss Control Performance Standards and Specifications

GDF Category	Emission Factor Requirement	Sec.	Std. or Spec.	Test Procedure
New Installations	≤ 0.57 lbs/1000 gallons ullage/day	3.1, 3.2 & 3.3	Std.	TP-206.1 and/or TP-206.2
Existing Installations (Retrofits)	≤ 2.26 lbs/1000 gallons ullage/day	3.1, 3.2 & 3.3	Std.	TP-206.1 and/or TP-206.2

3.1 Standing Loss Control Emission Factor

For new installations the Standing Loss Control Emission Factor shall be 0.57 pounds hydrocarbon per 1000 gallons ullage per day (lbs/1000 gal ullage/day) or less. For existing installations the Standing Loss Control Emission Factor shall be 2.26 lbs/1000 gal ullage/day or less. The applicable emission standard shall be determined for new and existing installations based on the operative and effective dates in Table 2-1. The Standing Loss Control Emission Factor shall be determined from temperature attenuation and/or hydrocarbon emissions as defined in Sections 3.2 and 3.3 of this procedure, respectively.

3.1.1 Standing Loss Control vapor recovery systems shall be certified based on one of the two following approaches:

(a) The performance approach tests all GDF components as a system. After successfully meeting the retrofit or new installation emission factor requirements, these components are certified together as a system.

(b) The design approach tests GDF components independently. After successfully meeting the component specific emission factor requirements from Table 3-2, these components shall be added to a consolidated Executive Order. Mixing and matching of design based components only applies to design based Standing Loss Control vapor recovery components.

(c) The applicant shall specify the certification approach, whether the performance approach or design approach, in the application.

3.1.2 All Standing Loss Control vapor recovery systems shall be tested for a minimum period as defined in Sections 3.3, 3.4, or 3.5 of this procedure. All vapor connections, fittings, emergency vents, and tank gauges required on the tank shall meet the performance standards of Section 4.6 (no leak).

Table 3-2
Standing Loss Control Vapor Recovery System Design Configurations*

Emission Factor	Component(s)			
(lbs/1000 gallon ullage/day)	**Insulation**	**Paint**	**Shade**	**P/V Valve**
0.57	**X**			**X**
2.26		**X**		**X**
2.26			**X**	**X**

***All components in Table 3-2 shall be certified with a pressure/vacuum (P/V) relief valve certified in accordance with Section 3.6 of this procedure.

3.2 Optional Standing Loss Control Emission Factor for Existing Installations

3.2.1 The applicant may request the certification to one of the following optional standing loss control emission factor for existing installations:

0.57 pounds/1000 gallon ullage~~tank volume~~/day or
1.34 pounds/1000 gallon ullage~~tank volume~~/day

3.2.2 If certification is sought for one of the above optional emission factors, the applicant shall make the request in the application and transmittal letter.

3.3 Temperature Attenuation Loss Emission Factor

3.3.1 For control technologies that attenuate fuel surface temperature, the following equation shall be used to determine the standing loss emission factor.

$$EF = EF_{Af}$$

Where:

EF is the standing loss emission factor in pounds/1000 gallons ullage/day

$$EF_{Af} = 3.48 (A_f) - 0.23$$

A_f is determined by TP-206.1, Determination of Emission Factor for Standing Loss Control Vapor Recovery Systems Using Temperature Attenuation at Gasoline Dispensing Facilities with Aboveground Storage Tanks

$EF_{Af} = 0$ when $A_f \leq 0.07$

3.3.2 The minimum certification testing duration shall be 30 consecutive days during the summer months (June 1 to September 30). At least seven of the 30 days shall have a daily peak temperature between 90 ºF to 105 ºF. The Executive Officer may allow testing outside the summer months if the criteria of this section are met.

3.4 Processor Emission Factor

3.4.1 The standing loss emission factor for a processor shall be determined by the following equation:

$$EF = EF_{HC}$$

Where:

EF is the standing loss emission factor in pounds/1000 gallons ullage/day

EF_{HC} is determined by TP-206.2, Determination of Emission Factor for Standing Loss Control Vapor Recovery Systems Using Processors at Gasoline Dispensing Facilities with Aboveground Storage Tanks

3.4.2 The minimum operational test shall be 180 days. Abbreviated testing for certified processor may be allowed as provided by Section 19.

3.5 Temperature Attenuation and Processor Emission Factor

3.5.1 The standing loss emission factor shall be determined by the following equation for a system that employs temperature attenuation technology and processor.

$$EF = EF_{Af} + EF_{HC}$$

EF_{Af} and EF_{HC} are determined by Section 3.3 and TP-206.2, respectively.

3.5.2 The minimum operational test shall be 180 days. Abbreviated testing may be allowed as provided by Section 19.

3.6 Pressure/Vacuum Vent Valve

The Executive Officer shall certify only those vapor recovery systems equipped with a pressure/vacuum (P/V) relief valve(s) on the aboveground storage tank vent pipe(s). Verification of the P/V relief valve pressure settings and leak rate requirements set forth below shall be determined by TP-201.1E CERT (Leak Rate and Cracking Pressure of Pressure/Vacuum Vent Valve).

3.6.1 The pressure settings for the P/V valve shall be:

Positive pressure setting between 2.5 to 6.0 inches H_2O
Negative pressure setting between 6.0 to 10.0 inches H_2O

3.6.2 The total leak rates for P/V valves shall be less than or equal to:

0.17 cubic feet per hour (CFH) at +2.0 inches H_2O
0.63 CFH at -4.0 inches H_2O

3.6.3 The total leak rate of all P/V valves certified for use with any vapor recovery system shall not exceed 0.17 CFH at 2.0 inches H_2O or 0.63 CFH at -4.0 inches H_2O. Applicants may request to certify a system for use with multiple P/V valves by choosing P/V valves certified to more restrictive leak rate performance specifications. The applicant shall state in the certification application the leak rates to which P/V valves are to be certified. All individual valves shall be tested and certified to those stated leak rate specifications.

3.6.4 Certification test sites shall be configured with a minimum of three P/V valves for representativeness, each P/V valve to be configured with an associated ball valve.

3.6.5 The minimum operational test of the P/V valves shall be at least 180 days. Abbreviated testing may be allowed as provided by Section 19.

4. PHASE I PERFORMANCE STANDARDS AND SPECIFICATIONS

Table 4-1 summarizes the Phase I Performance Standards and Specifications applicable to all non-below grade vaulted AST Phase I vapor recovery systems.

Table 4-1
Phase I Performance Standards and Specifications
APPLICABLE TO AST PHASE I VAPOR RECOVERY SYSTEMS

Performance Type	Requirement	Sec.	Std. or Spec.	Test Procedure
Phase I Transfer Efficiency	≥ 98% Efficiency	4.1	Std.	TP-201.1 TP-201.1A
Phase I Transfer Emission Factor	HC ≤ 0.15 pounds/1,000 gallons dispensed	4.1	Std.	TP-201.1A
Static Pressure Performance	In accordance with Section 4.2	4.2	Std.	TP-206.3
Pressure Integrity of Drop-Tube with Overfill Protection	Leak rate ≤ 0.17 CFH at 2.0 inches H_2O	4.3	Std.	TP-201.1D
Phase I Product and Vapor Adaptors	1. Fixed (non-Rotatable), or 2. Rotatable	4.4	Spec.	1. Testing and Eng. Eval. (fixed) 2. TP-201.1B (rotatable)
Phase I Product and Vapor Adaptor Cam and Groove	As Shown in Figure 4A and 4B	4.4	Spec.	Micrometer
Phase I Vapor Adaptor	Poppetted	4.4	Spec.	Testing and Eng. Eval.
Phase I Vapor Adaptor	No Indication of Vapor Leaks	4.4	Std.	LDS or Bagging
Side or Bottom Fill Phase I Adaptor	Poppetted or Close-Coupled Shut-Off Valve	4.4	Spec.	Testing and Eng. Eval.
Side or Bottom Fill Phase I Adaptor	No Indication of Vapor Leaks	4.4	Std.	LDS or Bagging
Spill Container Drain Valve	Leak rate ≤ 0.17 CFH at +2.0 inches H_2O	4.5	Std.	TP-201.1C TP-201.1D
Vapor Connectors and Fittings	No Indication of Vapor Leaks	4.6	Std.	LDS or Bagging

Performance Type	Requirement	Sec.	Std. or Spec.	Test Procedure
Emergency Vent	No Indication of Vapor Leaks	4.6	Std.	LDS or Bagging~~,~~
Compatibility with Fuel Blends	Materials shall be compatible with approved fuel blends	4.7	Spec.	Testing and Eng. Eval.
Dedicated Gauging Port ~~with Drop Tube~~	No Indication of Vapor Leaks	4.8	Std.	Testing and Eng. Eval.
Compatibility of Phase I System with Standing Loss Control System	See Section 4.9	4.9	Spec.	Testing and Eng. Eval.

4.1 Phase I Efficiency / Emission Factor

4.1.1 The minimum volumetric efficiency of Phase I systems shall be 98.0%. This shall be determined in accordance with TP-201.1 (Volumetric Efficiency of Phase I Vapor Recovery Systems).

4.1.2 The hydrocarbon emission factor for systems with processors shall not exceed 0.15 pounds per 1,000 gallons dispensed. This shall be determined in accordance with TP-201.1A (Emission Factor for Phase I Systems at Dispensing Facilities).

4.2 Static Pressure Performance

The static pressure performance of Phase I vapor recovery systems shall be determined in accordance with TP-206.3 (Determination of Static Pressure Performance of Vapor Recovery Systems of Dispensing Facilities with Aboveground Storage Tanks).

4.2.1 All Phase I systems shall be capable of meeting the performance standard in accordance with Equation 4-1.

4.2.2 The minimum allowable final pressure after five-minutes, with an initial pressure of two (2.00) inches H_2O, shall be calculated as follows:

Equation 4-1

$$P_f = 2e^{\frac{-223.90}{V}}$$

Where:

P_f = The minimum allowable final pressure after five-minutes, inches H_2O

V = The ullage of the system, gallons

e = A dimensionless constant approximately equal to 2.718

2 = The initial starting pressure, inches H_2O

-223.90 = AST decay constant for a 5 minute test

4.3 Phase I Drop-Tubes with Over-Fill Prevention Devices (Top-Fill Application)

Phase I drop-tubes with over-fill prevention devices installed shall have a leak rate not to exceed 0.17 ~~cubic feet per hour (0.17~~ CFH~~)~~ at a pressure of two inches water column (2.0" H_2O). The leak rate shall be determined in accordance with TP-201.1D (Leak Rate of Drop Tube Overfill Prevention Devices and Spill Container Drain Valves). Drop-tubes that do not have an over-fill protection device shall not leak. Drop tubes and drop tube overfill prevention device certified per CP-201 shall be deemed to meet the requirement of this section.

4.4 Phase I Product and Vapor Adaptors

4.4.1 The vapor and product adaptors shall not leak. The vapor and product adaptors shall be either rotating or non-rotating. Vapor and product adaptors certified per CP-201 shall be deemed to satisfy the requirement of this section.

4.4.2 Phase I product and vapor recovery adaptors shall be manufactured in accordance with the cam and groove specifications shown in Figures 4A and 4B.

4.4.3 Phase I vapor recovery adaptors shall have a poppet. The poppet shall not leak when closed. The absence of vapor leaks may be verified by the use of commercial liquid leak detection solution (LDS), or by bagging when the vapor containment space of the aboveground storage tank is subjected to a non-zero gauge pressure. (Note: leak detection solution (LDS) will detect leaks only when positive gauge pressure exists.)

4.4.4 The side or bottom fill Phase I adaptor shall have a poppet or close-coupled shut-off valve. The poppet or close coupled shut-off valve shall not leak when closed. The absence of vapor leaks may be verified by the use of commercial liquid leak detection solution, or by bagging when the vapor containment space of the aboveground storage tank is subjected to a non-zero gauge pressure. (Note: leak detection solution will detect leaks only when positive gauge pressure exists.).

4.5 Spill Container

4.5.1 Phase I spill container drain valves shall not exceed a leak rate of 0.17 CFH at 2.0 inches H_2O. Spill containers with cover-actuated drain valves shall be tested both with the lid installed and with the lid removed. The leak rate shall be determined in accordance with TP-201.2B (Pressure Integrity of Vapor Recovery Equipment). Phase I configurations installed so that liquid drained through the drain valve drains directly into the drop tube rather that the AST ullage shall be tested in accordance with TP-201.1C (Leak Rate of Drop Tube/Drain Valve Assembly) or TP-201.1D (Leak Rate of Drop Tube Overfill Prevention Device), whichever is applicable. Drain valves certified per CP-201 shall be deemed to satisfy the requirements of this section.

4.5.2 Drain valves shall not be allowed in containment boxes used exclusively for Phase I vapor connections unless required by other applicable regulations.

4.5.3 Spill containers shall be maintained in accordance with all applicable requirements.

4.6 Vapor Connections, Fittings, Emergency Vents, Tank Gauges

All vapor connections, fittings, emergency vent, tank gauges, components, and auxiliary fittings not specifically certified with an allowable leak rate shall not leak. The absence of vapor leaks may be verified by the use of commercial liquid leak detection solution, or by bagging when the vapor containment space of the aboveground storage tank is subjected to a non-zero gauge pressure. (Note: leak detection solution will detect leaks only when positive gauge pressure exists.) The absence of liquid leaks may be verified by visual inspection for seepage or drips.

4.7 Materials Compatibility with Fuel Blends

Vapor recovery systems and components shall be compatible with any and all fuel blends in common use in California, including seasonal changes, and approved for use as specified in title 13, CCR, Section 2260 et seq. Applicants for certification may request limited certification for use with only specified fuel blends. Such fuel-specific certifications shall clearly specify the limits and restrictions of the certification.

4.8 Dedicated Gauging Port ~~with Drop Tube~~

An AST shall include a dedicated gauging port for determining the amount of gasoline. This determination shall be accomplished either manually ~~tank gauging~~ (measuring gasoline levels using a gauging stick), mechanically, or electronically. If the determination is accomplished manually, the ~~The gauging~~ port shall have a drop tube which has the discharge opening entirely submerged when the liquid level is ~~6~~ six inches above ~~from~~ the bottom of the

tank. The gauging port shall be permanently identified ~~on the tank~~. The gauging port shall not leak when no manual gauging is occurring or at any time when mechanical or electronic components are used.

4.9 Compatibility of Phase I System with Standing Loss Control System

4.9.1 During a Phase I system certification, any associated certified Standing Loss Control system shall be subject to all of the standards and specifications in Section 3, and tested pursuant to Section 14.

(a) Compatibility of the proposed Phase I system with the certified Standing Loss Control system installed at the certification test site shall be determined by use of all data collected as part of the monitoring described in Section 14. Failure of any Standing Loss Control system tests conducted during the Phase I system certification shall require an explanation from the applicant and a determination by the Executive Officer in regard to the possible cause of the failure. Standing Loss Control system test failures shall not trigger termination of the Phase I system certification test unless sufficient information demonstrates that the Phase I system caused the failure(s).

(b) Repeated component test failures may lead to a determination of incompatibility during the operational test.

(c) After successfully completing the certification testing, the Phase I system shall undergo engineering evaluation to determine compatibility with other certified Standing Loss Control systems. Unless otherwise specified by the applicant, compatibility with all other certified Standing Loss Control systems shall be evaluated by the Executive Officer.

4.9.2 Applicants for certification may as a performance specification, limit the type of equipment with which their system is compatible. Any such specification shall become a condition of certification.

Figure 4A
Phase I Adaptor Cam and Groove Standard

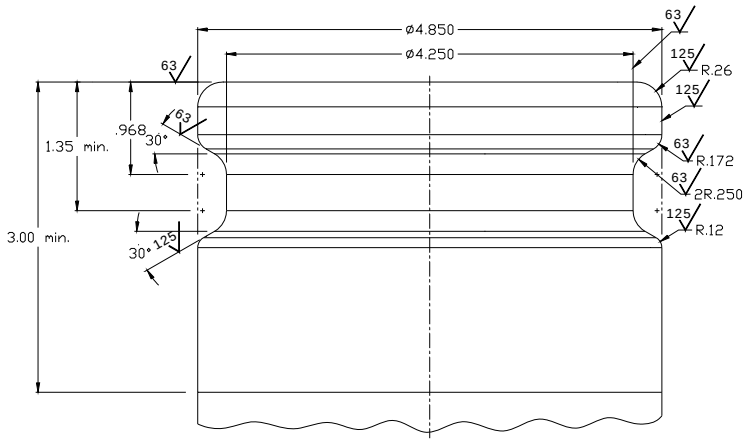

UNLESS OTHERWISE SPECIFIED
DIMENSIONS ARE IN INCHES
TOLERANCES ON DECIMALS
.XXX ± .005
.XX ± .01
ANGLES ± 0.5°

Figure 4B
Phase I Vapor Recovery Adaptor Cam and Groove Standard

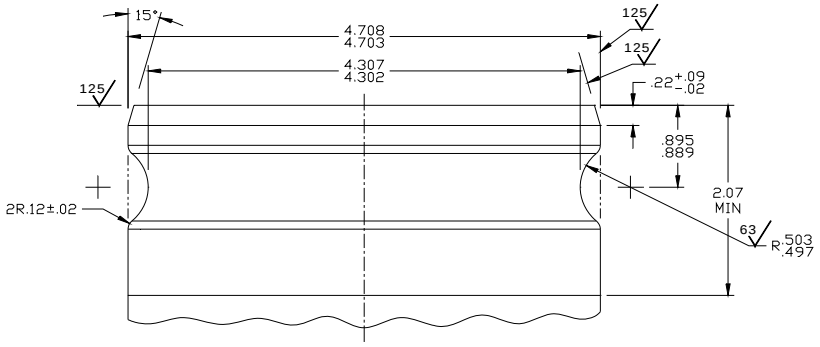

UNLESS OTHERWISE SPECIFIED
DIMENSIONS ARE IN INCHES
TOLERANCES ON DECIMALS
.XXX ± .005
.XX ± .02
ANGLES ± 0.5°

BASED ON
COMMERCIAL ITEM DESCRIPTION
CID A-A-59326
COUPLING HALF, MALE

5. PHASE II PERFORMANCE STANDARDS AND SPECIFICATIONS APPLICABLE TO AST PHASE II VAPOR RECOVERY SYSTEMS

Table 5-1 summarizes the Phase II Performance Standards and Specifications applicable to all non-below grade vaulted AST Phase II vapor recovery systems. Phase II vapor recovery systems shall be certified only in facilities equipped with a certified Phase I system.

Table 5-1
Phase II Performance Standards and Specifications
APPLICABLE TO AST PHASE II VAPOR RECOVERY SYSTEMS

Performance Type	Requirement	Sec.	Std. or Spec.	Test Procedure
Phase II Emission Factor Includes: Refueling and Vent Emissions	Summer Fuel: 95% Efficiency and HC ≤ 0.38 pounds/1,000 gallons dispensed Winter Fuel: 95% Efficiency or HC ≤ 0.38 pounds/1,000 gallons dispensed	5.1	Std.	TP-201.2 TP-201.2A
Static Pressure Performance	In accordance with Section 5.2	5.2	Std.	TP-206.3
Spillage Including Drips from Spout	≤ 0.24 pounds/1,000 gallons	5.3	Std.	TP-201.2C
ORVR Compatibility	~~Refueling ORVR Vehicles Shall Not Cause the System to Exceed the Applicable Efficiency or Emission Std. Including ORVR Penetrations to 80%~~Applicant shall develop a procedure to demonstrate ORVR compatibility when requested by the Executive Officer.	5.4	Std.	Approved Procedure Developed by Applicant
Phase II Compatibility With Phase I Systems	See Section 5.5	5.5	Spec.	Testing and Eng. Eval.
Phase II Compatibility with Standing Loss Control Systems	See Section 5.6	5.6	Spec.	Testing and Eng. Eval.

Performance Type	Requirement	Sec.	Std. or Spec.	Test Procedure
Nozzle Criteria Each Phase II Nozzle Shall:	Post-Refueling Drips ≤ 3 Drops/Refueling Comply with dimensions specified in section 5.7.3.~~Terminal End OD ≤ 0.840 inches, for 2.5 inches,~~ Be capable of fueling any vehicle that can be fueled with a conventional nozzle	5.7	Spec.	TP-201.2D Engineering Evaluation
Liquid Retention Nozzle "Spitting"	≤ 100 ml/1,000 gallons ≤ 1.0 ml per nozzle per test	5.8	Std.	TP-201.2E
Nozzle/Dispenser Compatibility	Vapor Valve Closed When Hung Hold-open Latch Disengaged When Hung	5.9	Spec.	Testing and Eng. Eval.
Unihose MPD Configuration	One Hose/Nozzle per Dispenser Side	5.10	Spec.	Testing and Eng. Eval.
Coaxial Hose Routing Configurations	As Shown in Figure 5A, 5B, and 5C	5.11	Spec.	Testing and Eng. Eval.
Low Permeation Hoses	Permeation rate ≤ 10.0 g/m^2/day as determined by UL 330 (7th ed.)	21	Std.	UL 330 (7th ed.)
Phase II Vapor Riser	Minimum 1" Nominal ID	5.12	Spec.	Testing and Eng. Eval.
Vapor Return Piping (Remote Dispensers)	No liquid or fixed blockage Minimum 3" Nominal ID after first manifold Recommended slope 1/4" per foot Minimum slope 1/8" per foot Rigid piping, or equivalent	5.12	Spec.	Testing and Eng. Eval.
Liquid Condensate Traps	Shall have Automatic Evacuation System	5.13	Spec.	Testing and Eng. Eval.
Connectors and	No Indication of Vapor	5.14	Std.	LDS or

Performance Type	Requirement	Sec.	Std. or Spec.	Test Procedure
Fittings	Leaks			Bagging

5.1 Phase II Emission Factor/Efficiency

5.1.1 The Hydrocarbon emission factor and/or efficiency for Phase II vapor recovery systems shall be determined as follows:

When testing conducted with gasoline meeting the requirements for summer fuel:

95% Efficiency and Hydrocarbon emission factor not to exceed 0.38 pounds/1,000 gallons dispensed.

When testing conducted with gasoline meeting the requirements for winter fuel:

95% Efficiency or Hydrocarbon emission factor not to exceed 0.38 pounds/1,000 gallons dispensed.

Compliance with t~~T~~he emission factor **and the efficiency standards** shall be demonstrated ~~compliance with the standard~~ when calculated for **a test population consisting of 30 non-ORVR vehicles, selected according to TP-201.2A**. ~~each of these test populations:~~

~~A population of 10 ORVR and 10 non-ORVR vehicles will be used.~~
~~The vehicles defined as "ORVR vehicles" and~~
~~The vehicles defined as "non-ORVR vehicles."~~

~~The efficiency shall demonstrate compliance with the standard when calculated for the vehicles identified as "non-ORVR."~~

5.1.2 The emission factor and/or efficiency shall be determined in accordance with TP-201.2 (Efficiency and Emission Factor for Phase II Systems) and shall include all refueling emissions except for fugitive emissions.

5.2 Static Pressure Performance

The static pressure performance of Phase II systems shall be determined in accordance with TP-206.3 (Determination of Static Pressure Performance of Vapor Recovery Systems of Dispensing Facilities with Aboveground Storage Tanks.) All Phase II vapor recovery systems shall be capable of meeting the performance standard in accordance with Equation 4-2.

5.3 Spillage

The Executive Officer shall not certify vapor recovery systems that cause excessive spillage. Use of a nozzle certified per CP-201 shall be deemed to satisfy the following requirements.

5.3.1 Spillage shall be determined in accordance with TP-201.2C (Spillage from Phase II Systems). The emission factor for spillage shall not exceed 0.24 pounds/1000 gallons dispensed, for each of the following three categories:

(a) All refueling events;
(b) Refueling operations terminated before activation of the primary shutoff; and
(c) Refueling events terminated by activation of the primary shutoff.

5.3.2 The number of self-service refueling operations observed during certification testing of any AST system for spillage shall be not less than:

(a) 50 refueling operations [not including topoffs]; and
(b) 20 fill-ups [terminated by automatic shut-off, not including topoffs].

5.3.3 Increased spillage resulting from one top-off following the first activation of the automatic (primary) shutoff mechanism shall be subjected to challenge mode testing. Nozzles that result in excessive spillage following one top off shall not be certified.

5.4 Compatibility of Phase II Systems with Vehicles Equipped with ORVR Systems

~~5.4.1 When refueling vehicles equipped with onboard refueling vapor recovery (ORVR) systems, the Phase II system shall meet the criteria as specified in Section 5.1.~~

~~5.4.2 Compatibility shall be demonstrated for typical and worst case situations and shall demonstrate compatibility with 80% ORVR-equipped vehicle populations. Actual vehicles shall be used whenever feasible. Simulations may be proposed for specific demonstrations. Any ORVR simulation protocols shall be approved by the Executive Officer prior to conducting the test.~~

~~5.4.3~~ The ~~system~~ applicant, when requested by the Executive Officer, shall develop ~~be responsible for developing~~ a procedure by which ORVR compatibility can be demonstrated. This procedure is subject to engineering evaluation by the Executive Officer.~~; if it is deemed inadequate and/or unusable, the certification application shall be deemed unacceptable.~~

5.5 Compatibility of Phase II Systems with Phase I Systems

5.5.1 Phase II vapor recovery systems shall be certified only in facilities equipped with a certified Phase I system. During a Phase II system certification, the associated Phase I system shall be subject to all of the standards and specifications in Section 4, and tested pursuant to Section 14.

(a) Compatibility of the proposed Phase II system with the certified Phase I system installed at the certification test site shall be determined by use of all data collected as part of the monitoring described in Section 14. Failure of any Phase I system tests conducted during the Phase II system certification shall require an explanation from the applicant and a determination by the Executive Officer in regard to the possible cause of the failure. Phase I system test failures shall not trigger termination of the Phase II system certification unless sufficient information demonstrates that the Phase II system caused the failure(s).

(b) Repeated component test failures may lead to a determination of incompatibility during the operational test.

(c) After successfully completing the certification, the Phase II system shall be evaluated based on engineering evaluation of pressure profiles to determine compatibility with other certified Phase I systems. Unless otherwise specified by the applicant, compatibility with all other certified Phase I systems shall be evaluated by the Executive Officer.

5.5.2 Applicants for certification may, as a performance specification, limit the type of equipment with which their system is compatible. Any such specification shall become a condition of certification.

5.6 Compatibility of Phase II Systems with Standing Loss Control System

5.6.1 During a Phase II system certification, any associated certified Standing Loss Control system shall be subject to all of the standards and specifications in Section 3, and tested pursuant to Section 14.

(a) Compatibility of the proposed Phase II system with the certified Standing Loss Control system installed at the certification test site shall be determined by use of all data collected as part of the monitoring described in Section 14. Failure of any Standing Loss Control system tests conducted during the Phase II system certification shall require an explanation from the applicant and a determination by the Executive Officer in regard to the possible cause of the failure. Standing Loss Control system test failures shall not trigger termination of the Phase II system certification

unless sufficient information demonstrates that the Phase II system caused the failure(s).

(b) Repeated component test failures may lead to a determination of incompatibility during the operational test.

(c) After successfully completing the certification, the Phase II system shall undergo engineering evaluation to determine compatibility with other certified Standing Loss Control systems. Unless otherwise specified by the applicant, compatibility with all other certified Standing Loss Control systems shall be evaluated by ARB.

5.6.2 Applicants for certification may, as a performance specification, limit the type of equipment with which their system is compatible. Any such specification shall become a condition of certification.

5.7 Nozzle Criteria

5.7.1 Each vapor recovery nozzle shall be capable of refueling any vehicle that complies with the fill pipe specifications (title 13, CCR, Section 2235) and can be fueled by a conventional nozzle.

5.7.2 Each vapor recovery nozzle shall be “dripless,” meaning that no more than three drops shall occur following each refueling operation. This shall be determined in accordance with TP-201.2D (Post-Fueling Drips from Nozzles) with the exception that the minimum number of test nozzles be two.

5.7.3 Each vapor recovery nozzle shall comply with the following:

(a) The terminal end shall have a straight section of at least 2.5 inches (6.34 centimeters) in length;
(b) The outside diameter of the terminal end shall not exceed 0.840 inch (2.134 centimeters) for the length of the straight Section; and
(c) The retaining spring or collar shall terminate at least 3.0 inches (7.6 centimeters) from the terminal end.

5.7.4 Additional nozzle criteria are contained in Sections 6 and 7.

5.7.5 Use of a nozzle certified per CP-201 shall be deemed to satisfy the requirements of Section 5.7.

5.8 Liquid Retention

Use of a nozzle certified per CP-201 will satisfy the following criteria:

5.8.1 Liquid retention in the nozzle and vapor path on the atmospheric

pressure side of the vapor check valve shall not exceed 100 ml per 1,000 gallons. This shall be determined in accordance with TP-201.2E (Gasoline Liquid Retention in Nozzles and Hoses) with the exception that the minimum number of test nozzles shall be two.

5.8.2 Nozzle "spitting" shall not exceed 1.0 ml per nozzle per test and shall be determined in accordance with TP-201.2E (Gasoline Liquid Retention in Nozzles and Hoses).

5.8.3 The number of self-service refueling operations observed during certification testing of any system for liquid retention and spitting shall be not less than:

- 10 refueling operations (not including topoffs); and
- 4 fill-ups (terminated by automatic shut-off, not including topoffs).

5.9 Nozzle/Dispenser Compatibility

The nozzle and dispenser shall be compatible as follows:

5.9.1 The nozzle and dispenser shall be designed such that the vapor check valve is in the closed position when the nozzle is properly hung on the dispenser.

5.9.2 The nozzle and dispenser shall be designed such that the nozzle cannot be hung on the dispenser with the nozzle valves in the open position.

5.10 Unihose Multi-Product Dispenser (MPD) Configuration

There shall be only one hose and nozzle for dispensing gasoline on each side of a ~~multi-product dispenser (~~MPD~~)~~. This shall not apply to facilities installed prior to January 1, 2009, unless the facility replaces more than 50 percent of the dispensers. Facility modifications that meet the definition of "major modification" for a Phase II system in D-200 trigger the unihose requirement as the facility is considered a "new installation." Exception: dispensers which must be replaced due to damage resulting from an accident or vandalism may be replaced with the previously installed type of dispenser.

5.11 Coaxial Hose Routing Configurations

The routing of coaxial hoses shall be consistent with the configurations outlined in Figure 5A (top-mount dispenser), Figure 5B (end-mount dispenser), and Figure 5C (ground-mounted dispenser with high-hang hose). A liquid removal system is not required if gasoline within the vapor passage of the coaxial hose can be cleared through natural drainage into the vehicle. In the case of top-mounted, side-mounted, and ground-mounted dispensers, natural drainage will be determined at a distance of 24 inches and a height of

30 inches from the outside plane of the dispenser.

5.12 Vapor Return Piping

The requirements of Sections 5.12.1 through 5.13.2 for the vapor return piping and, if applicable, condensate traps, from the dispenser riser to the aboveground storage tank, shall apply to any facility installed after January 1, 2009.

5.12.1 The vapor return piping from any fueling point to the aboveground storage tank shall be free of liquid or fixed blockage.

5.12.2 The Phase II riser shall have a minimum nominal internal diameter of one inch (1" ID). The connection between the Phase II riser and the dispenser shall be made with materials listed for use with gasoline, and shall have a minimum nominal 1" ID.

5.12.3 For remote dispensers, vapor return piping shall have a minimum nominal internal diameter of three inches (3" ID) from the point of the first manifold to the storage tank. Existing facilities operating prior to January 1, 2009, shall be required to meet the minimum three inch diameter standard only upon facility modifications requiring exposing at least 50 percent of the underground vapor return piping.

5.12.4 Wherever feasible, the recommended minimum downward slope of the vapor return piping, from the remote dispensers to the tank, shall be at least one-fourth (1/4) inch per foot of run. The minimum downward slope, in all cases, shall be at least one-eighth (1/8) inch per foot of run.

5.12.5 The vapor return piping shall be constructed of rigid piping (any piping material with a bend radius that exceeds six feet; the maximum allowable deflection distance is 9 5/8 inches, as determined by TP-201.2G, Bend Radius Determination for Underground Storage Tank Vapor Return Piping), or shall be contained within rigid piping, or shall have an equivalent method, approved by the Executive Officer, to ensure that proper slope is achieved and maintained. (Note: this does not apply to flexible connectors at potential stress points, such as storage tanks, dispensers, and tank vents.) Rigidity shall be determined in accordance with TP-201.2G.

5.12.6 The applicant shall specify the maximum allowable length of vapor return piping of the system and the Executive Officer shall validate by testing and/or engineering evaluation.

5.13 Liquid Condensate Traps

Liquid condensate traps (also known as knockout pots and thief ports) are

used to keep the vapor return piping from the remote dispenser to the aboveground storage tank clear of any liquid blockage.

5.13.1 Liquid condensate traps shall be used only when the minimum slope requirements of 1/8 inches per foot of run cannot be met due to the topography.

5.13.2 When condensate traps are installed, they shall be:

(a) certified by ARB;
(b) maintained vapor tight;
(c) accessible for inspection upon request;
(d) capable of automatic evacuation of liquid; and
(e) equipped with an alarm system in case of failure of the evacuation system.

5.14 Connections and Fittings

All connections, fittings, emergency vents, tank gauges, components, and auxiliary fittings not specifically certified with an allowable leak rate shall not leak. The absence of vapor leaks may be verified by the use of commercial liquid leak detection solution, or by bagging when the vapor containment space of the aboveground storage tank is subjected to a non-zero gauge pressure. (Note: leak detection solution will detect leaks only when positive gauge pressure exists.) The absence of liquid leaks may be verified by visual inspection for seepage and drips.

Figure 5A
Top Mount Dispenser for Aboveground Tank with Phase II Vapor Recovery System

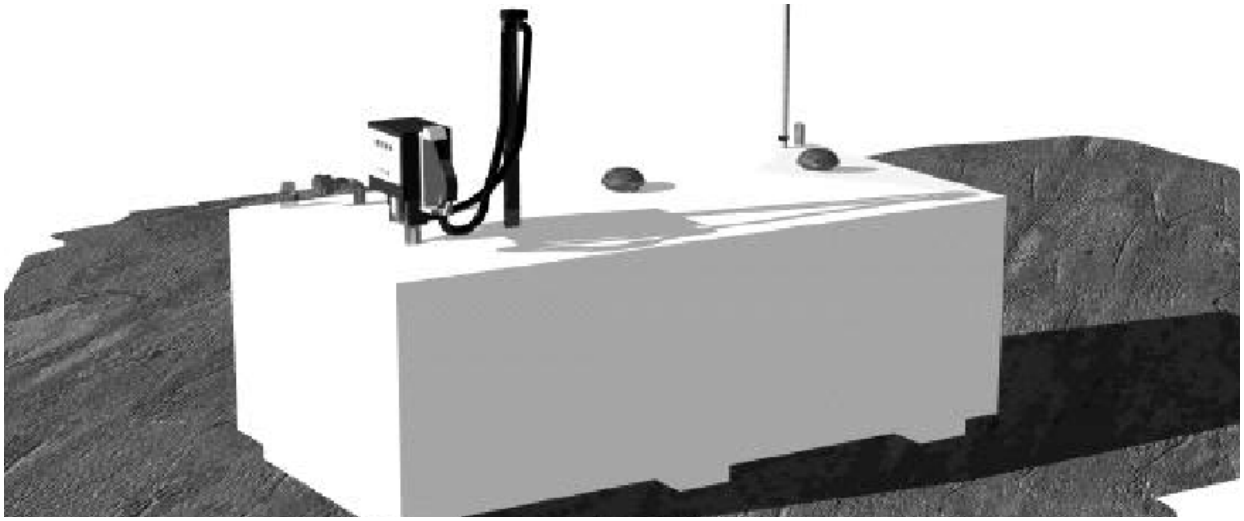

Figure 5B
End-Mount Dispenser for Aboveground Tank with Phase II Vapor Recovery System

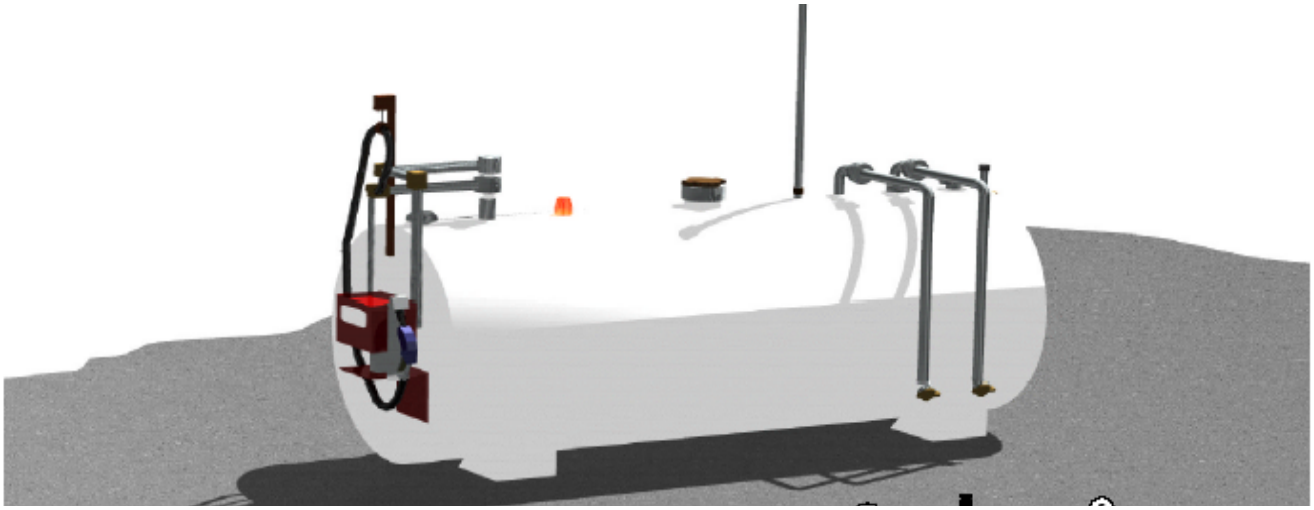

Figure 5C
Tank with Ground-Mount Dispenser and High-Hang Hose for Aboveground Storage Tank with Phase II Vapor Recovery System

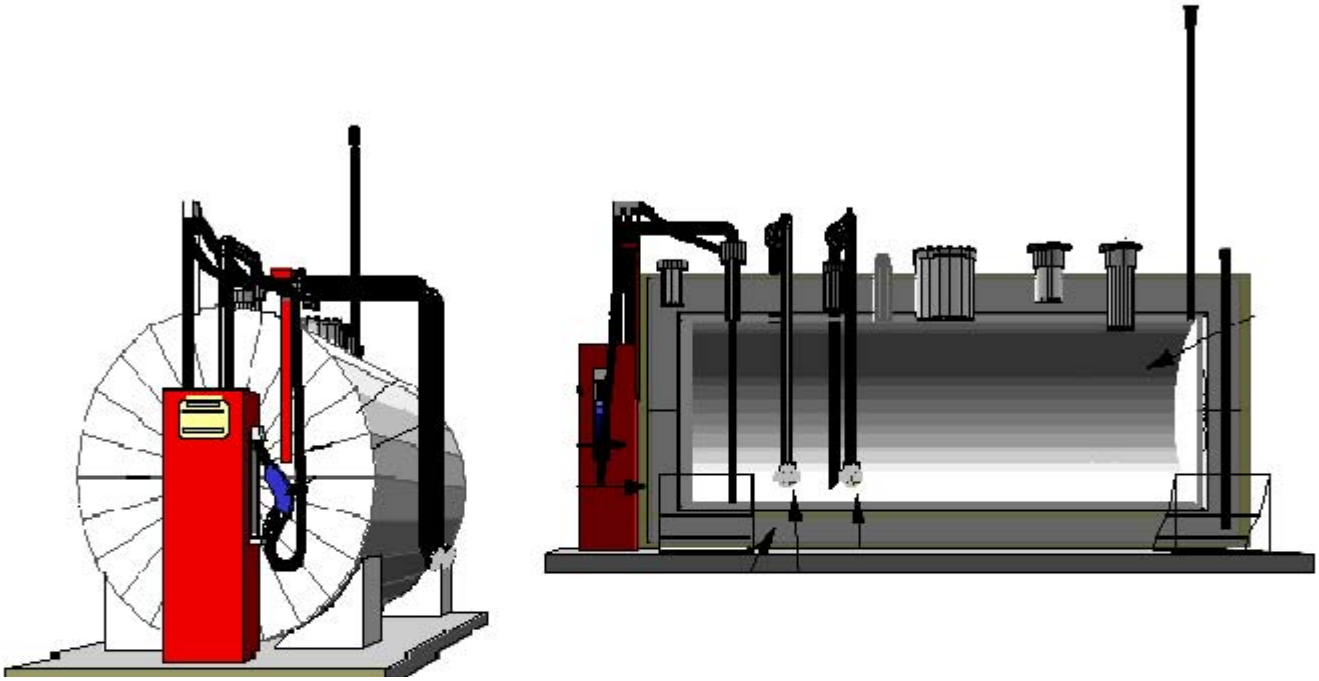

6. PHASE II PERFORMANCE STANDARDS AND SPECIFICATIONS APPLICABLE TO BALANCE VAPOR RECOVERY SYSTEMS

Table 6-1 summarizes the performance standards and specifications specifically applicable to Phase II Balance vapor recovery systems. These systems are also subject to all of the standards and specifications in Sections 3 through 5, and the applicable requirements in Section 9. Nozzles and associated components shall be certified per CP-201 as specified in Section 6.

Table 6-1
Phase II Performance Standards and Specifications
APPLICABLE TO PHASE II BALANCE VAPOR RECOVERY SYSTEMS

Performance Type	Requirement	Sec.	Std. or Spec.	Test Procedure
Nozzle Criteria Each Balance Nozzle Shall:	Have an Insertion Interlock Be Equipped with a Vapor Valve	6.1	Spec.	Testing and Eng. Eval.
Insertion Interlock	Verification of No Liquid Flow Prior to Bellows Compression	6.1	Spec.	Testing and Eng. Eval.
Vapor Check Valve Leak rate	$\leq$ 0.07 CFH at 2.0 inches H_2O	6.1	Spec.	TP-201.2B
Bellows Insertion Force	Pounds (force) to Retaining Device Specified by Applicant and Verified During Certification Testing	6.1	Spec.	Testing and Eng. Eval.
Nozzle Pressure Drop	ΔP at 60 CFH of $N_2 \leq$ 0.08 inches H_2O	6.2	Std.	TP-201.2J
Hose Pressure Drop [Including Whip Hose]	Use Hose Certified per CP-201: ΔP at 60 CFH of $N_2 \leq$ 0.09 inches H_2O	6.2	Std.	TP-201.2J
Breakaway Pressure Drop	ΔP at 60 CFH of $N_2 \leq$ 0.04 inches H_2O	6.2	Std.	TP-201.2J
Dispenser Pressure Drop	ΔP at 60 CFH of $N_2 \leq$ 0.08 inches H_2O	6.2	Std.	TP-201.2J
Swivel Pressure Drop	ΔP at 60 CFH of $N_2 \leq$ 0.01 inches H_2O	6.2	Std.	TP-201.2J
Pressure Drop Phase II Riser to Tank	ΔP at 60 CFH of $N_2 \leq$ 0.05 inches H_2O	6.2	Std.	TP-201.4
Pressure Drop from Nozzle to AST	ΔP at 60 CFH of $N_2 \leq$ 0.35 inches H_2O ΔP at 80 CFH of $N_2 \leq$ 0.62 inches H_2O	6.2	Std.	TP-201.4
Liquid Removal System	Capable of Removing 5 ml/ gal. (average)	6.3	Std.	TP-201.6

6.1 Balance Nozzle Criteria

Nozzles for use with balance systems shall comply with all of the following criteria below.

6.1.1 Each balance nozzle shall have an insertion interlock designed to prevent the dispensing of fuel unless there is an indication that the nozzle is engaged in the fill pipe (i.e., the nozzle bellows is compressed). The performance specifications for the insertion interlock mechanism shall be established during the certification process.

6.1.2 Each balance nozzle shall be equipped with a vapor valve. The leak rate for the vapor valve shall not exceed 0.07 CFH at a pressure of 2.0 inches H_2O as determined by TP-201.2B.

6.1.3 The force necessary to compress the nozzle bellows to the retaining device, or a specified distance, shall be specified by the applicant for certification and verified during certification testing. The applicant shall include a protocol to test the nozzle bellow compression force in the certification application. This procedure is subject to engineering evaluation and approval by the Executive Officer.

6.1.4 Use of a balance nozzle certified per CP-201 shall be deemed to satisfy the requirements of Section 6.1.

6.2 Dynamic Pressure Drop Criteria for Balance Systems

6.2.1 The dynamic pressure drop for balance systems shall be established in accordance with TP-201.4 (Dynamic Pressure). The dynamic pressure drop standards from the tip of the nozzle spout to the aboveground storage tank, with the Phase I vapor poppet open, shall not exceed the following:

0.35 inches H_2O at a flow rate of 60 CFH of Nitrogen; and
0.62 inches H_2O at a flow rate of 80 CFH of Nitrogen.

6.2.2 The dynamic pressure drop for balance system components, measured in accordance with TP-201.2J (Pressure Drop Bench Testing of Vapor Recovery Components) shall not exceed the following.

Nozzle:	0.08 inches H_2O
Hose (Including Whip Hose):	0.09 inches H_2O
Breakaway:	0.04 inches H_2O
Dispenser:	0.08 inches H_2O
Swivel:	0.01 inches H_2O

(a) The dynamic pressure drop for the balance system vapor return line shall not exceed the following as determined by TP-201.4:

Phase II Riser to AST: 0.05 inches H_2O @60 CFH

(b) The addition of other components is acceptable as long as the total is not exceeded. The applicant may request to be certified to a dynamic pressure lower than those specified above. This shall be specified in the application and verified during certification testing.

(c) Use of balance system components certified per CP-201 shall be deemed to satisfy the requirements of Section 6.2.

6.3 Liquid Removal Systems

For those systems requiring liquid removal, the liquid removal rate shall be determined in accordance with TP-201.6 (Determination of Liquid Removal of Phase II Vapor Recovery Systems of Dispensing Facilities). The minimum removal rate, averaged over a minimum of 4 gallons, shall equal or exceed 5 ml per gallon. The minimum dispensing rate for this requirement shall be specified during the certification process. Use of nozzle certified per CP-201 shall be deemed to satisfy the requirements of Section 6.3.

7. PHASE II PERFORMANCE STANDARDS AND SPECIFICATIONS APPLICABLE TO ALL ASSIST VAPOR RECOVERY SYSTEMS

Table 7-1 summarizes the performance standards and specifications specifically applicable to Phase II Assist vapor recovery systems. These systems are also subject to all of the standards and specifications in Sections 3 through 5, and the applicable provisions of Sections 8 or 9.

Table 7-1
Phase II Performance Standards and Specifications
APPLICABLE TO ALL PHASE II VACUUM ASSIST SYSTEMS

Performance Type	Requirement	Sec.	Std. or Spec.	Test Procedure
Nozzle Criteria Each Assist Nozzle Shall:	Possess a Mini-Boot Have an Integral Vapor Valve	7.1	Spec.	Testing and Eng. Eval.
Nozzle Vapor Valve Leak rate	$\leq$ 0.038 CFH at +2.0 inches H_2O $\leq$ 0.10 CFH at $-$100 inches H_2O	7.1	Spec.	TP-201.2B
Nozzle Pressure Drop Specifications ΔP at Specified Vacuum Level	Specified by Applicant and Verified During the Certification Process	7.1	Spec.	TP-201.2J
Maximum Air to Liquid Ratio	1.00 (without processor) 1.30 (with processor)	7.2	Std.	TP-201.5
Air to Liquid Ratio Range	Specified by Applicant and Verified During the Certification Process	7.2	Spec.	TP-201.5

7.1 Nozzle Criteria

Nozzles for use with assist systems shall comply with all of the following criteria below.

7.1.1 Each assist nozzle shall be equipped with a mini-boot that both allows for a lower A/L ratio and minimizes the quantity of liquid gasoline exiting the fill pipe during a spitback event.

7.1.2 Each assist nozzle shall be equipped with a vapor valve. The leak rate for the vapor valve shall not exceed the following, as determined by TP-201.2B:

0.038 CFH at a pressure of +2.0 inches H_2O; and
0.10 CFH at a vacuum of $-$100 inches H_2O.

7.1.3 The nozzle pressure drop shall be specified by the applicant and verified during the certification process using TP-201.2J.

7.1.4 Use of a nozzle certified per CP-201 shall be deemed to satisfy the criteria of Section 7.1.

7.2 Air to Liquid Ratio

The air to liquid (A/L) ratio shall be specified by the applicant and verified during the certification process in accordance with TP-201.5 (Air to Liquid Volume Ratio). The maximum A/L shall not exceed the following:

1.00 (without processor);
1.30 (with processor).

Use of a nozzle certified per CP-201 shall be deemed to satisfy the criteria of Section 7.2.

8. PHASE II PERFORMANCE STANDARDS AND SPECIFICATIONS APPLICABLE TO ASSIST SYSTEMS UTILIZING A CENTRAL VACUUM UNIT

Table 8-1 summarizes the performance standards and specifications specifically applicable to Phase II Assist vapor recovery systems utilizing a Central Vacuum Unit. These systems are also subject to all of the standards and specifications in Sections 3, 4, 5, 7 and, if applicable, Section 9.

Table 8-1
Phase II Performance Standards and Specifications
APPLICABLE TO ALL PHASE II ASSIST SYSTEMS
UTILIZING A CENTRAL VACUUM UNIT

Performance Type	Requirement	Sec.	Std. or Spec.	Test Procedure
Specification of Minimum and Maximum Vacuum Levels	Specified by Applicant and Verified During the Certification Process	8.1	Spec.	Testing and Eng. Eval.
Number of Refueling Points Per Vacuum Device	Specified by Applicant and Verified During the Certification Process; and Challenge Mode Testing	8.2	Spec.	TP-201.5

8.1 Vacuum Levels Generated by the Collection Device

The normal operating range of the system shall be specified by the applicant and verified during the certification process, and the maximum and minimum vacuum levels shall be specified in the certification Executive Order. The applicant may propose challenge mode testing to extend the limits of the operating range.

8.2 Maximum Number of Refueling Points per Vacuum Device

The maximum number of refueling points that can be adequately associated with the vacuum device, including meeting the A/L limits, shall be specified by the applicant and verified during certification testing. The test shall be conducted with all of the refueling points except one using the same fuel grade, and the refueling point on which the effectiveness is being tested using a different fuel grade. An engineering evaluation followed by certification testing shall demonstrate the system's ability to meet the required A/L ratio and/or emission factor with a self-adjusting submersible turbine pump (STP).

9. PHASE II PERFORMANCE STANDARDS AND SPECIFICATIONS APPLICABLE TO SYSTEMS UTILIZING A DESTRUCTIVE OR NON-DESTRUCTIVE PROCESSOR

Tables 9-1 and 9-2 summarize the performance standards and specifications specifically applicable to all Phase II vapor recovery systems utilizing a processor. These systems are also subject to all of the standards and specifications in Sections 3 through 5 and, the applicable provisions of Sections 6, 7, and 8.

Table 9-1
Phase II Performance Standards and Specifications
APPLICABLE TO ALL PHASE II SYSTEMS
UTILIZING A DESTRUCTIVE PROCESSOR

Performance Type	Requirement	Sec.	Std. or Spec.	Test Procedure
Hazardous Air Pollutants (HAPS) from the processor	HAPS from the Processor Shall Not Exceed these Limits: 1,3-Butadiene: 1.2 lbs/year Formaldehyde: 36 lbs/year Acetaldehyde: 84 lbs/year	9.2	Std.	TP-201.2H
Maximum HC Rate from Processor	≤ 5.7 lbs/1,000 gallons (in breakdown mode)	9.3	Spec.	Testing and Eng. Eval.
Typical Load on Processor	Specified by Applicant and Verified during the Certification Process	9.4	Spec.	Testing and Eng. Eval.
Processor Operation Time	Specified by Applicant and Verified during the Certification Process	9.5	Spec.	Testing and Eng. Eval.

Table 9-2
Phase II Performance Standards and Specifications
APPLICABLE TO ALL PHASE II SYSTEMS
UTILIZING A NON-DESTRUCTIVE PROCESSOR

Performance Type	Requirement	Sec.	Std. or Spec.	Test Procedure
Maximum HC Rate from Processor	≤ 5.7 lbs/1,000 gallons (in breakdown mode)	9.3	Spec.	Testing and Eng. Eval.
Typical Load on Processor	Specified by Applicant and Verified during the Certification Process	9.4	Spec.	Testing and Eng. Eval.
Processor Operation Time	Specified by Applicant and Verified during the Certification Process	9.5	Spec.	Testing and Eng. Eval.

9.1 Processor Emission Factors

The processor emission factors shall be established in accordance with TP-201.2 (Efficiency and Emission Factor for Phase II Systems).

9.2 Hazardous Air Pollutants from Destructive Processors

Hazardous Air Pollutants (HAPS) from facilities using processors shall not exceed the following limits:

1,3-Butadiene: 1.2 pounds per year
Formaldehyde: 36 pounds per year
Acetaldehyde: 84 pounds per year

The emission factor shall be established in accordance with TP-201.2H (Determination of Hazardous Air Pollutants from Vapor Recovery Processors).

9.3 Maximum Hydrocarbon Emissions from the Processor

The maximum Hydrocarbon emissions from the processor, in breakdown mode, shall not exceed 5.7 pounds per 1,000 gallons as determined by TP-201.2.

9.4 Typical Load on the Processor

The typical load on the processor shall be identified by the applicant and verified during the certification process, and shall be included in the specifications in the certification Executive Order.

9.5 Processor Operation Time

The typical processor operation time shall be identified by the applicant and verified during the certification process, and shall be included in the specifications in the certification Executive Orders.

10. IN-STATION DIAGNOSTIC SYSTEMS

10.1 Vapor recovery systems at gasoline dispensing facilities that dispense greater than 600,000 gallons per year shall be equipped with an ISD system that meets the requirements of CP-201, Section 9.

11. CERTIFICATION OF VAPOR RECOVERY SYSTEMS

The Executive Officer shall certify only those vapor recovery systems that, based on testing and engineering evaluation of that system's design, component qualities, and performance, are demonstrated to meet all applicable requirements of this certification procedure. Except as provided in Sections 3, 18, and 19, this certification procedure should not be used to certify individual system components. Steps and conditions of the certification process, along with the Sections of this document that describe them, are outlined below.

(a)	Application Process	Section 12
(b)	Evaluation of the Applications	Section 13
(c)	Vapor Recovery System Certification Testing	Section 14
(d)	Alternate Test and Inspection Procedures	Section 15
(e)	Documentation of Certification	Section 16
(f)	Duration and Conditions of Certification	Section 17
(g)	Certification Renewal	Section 18
(h)	Amendments to Executive Orders	Section 19

11.1 Certification Fees

Each applicant submitting a system and/or component for certification shall be charged fees not to exceed the actual cost of evaluating and testing the system to determine whether it qualifies for certification. The applicant is required to demonstrate ability to pay the cost of testing prior to certification and performance testing. Applicants may request a payment plan for testing and certification costs. Requests for a payment plan should be submitted in writing to the Executive Officer and should include the payment frequency (monthly, quarterly, etc.) and amount of each payment to meet the obligation. Failure to fulfill the conditions of payment may result in revocation of the Executive Order.

12. APPLICATION PROCESS

All of the information specified in the following subsections shall be submitted to the Executive Officer for an application to be evaluated. An application for certification of a Standing Loss Control, Phase I, and/or Phase II vapor recovery system or a Standing Loss Control component may be made to the Executive Officer by any applicant.

The applicant for certification shall identify, in the preliminary application, the standard(s) or specification(s) with which the system or component complies, and demonstrate that the proposed system or component meets the primary performance standard(s) or specification(s) required by Sections 3 through 10 of this Procedure. For the preliminary application, the applicant shall have performed tests for all applicable performance specifications and standards. Engineering reports of successful test results for all these tests must be included in the preliminary application. In order to expedite the application process, the Executive Officer may determine that the application is acceptable based on the results of abbreviated operational and/or efficiency/emission factor testing and spillage. Test results shall be submitted for an operational test of at least 30 days, for a test of at least 20 vehicles demonstrating adequate collection, and for at least 50 observations of spillage (including at least 40 percent fills-ups), or equivalent verification that the system is capable of meeting the performance standards and specifications.

The system or component, as characterized by these reports, shall be subjected to an engineering evaluation. If the preliminary application is deemed acceptable, the applicant shall be notified and shall expeditiously install the system or component for certification testing. If the preliminary application is deemed unacceptable, the applicant shall be notified of any deficiencies within 60 days. The final application shall not be deemed complete until it contains the results of all necessary testing, the approvals of other agencies, the finalized operating and maintenance manuals, and all other requirements of certification.

The applicant shall demonstrate, to the satisfaction of the Executive Officer, that the system or component complies with the performance standards under actual field and challenge mode conditions. Such demonstrations shall include the submission of test results with the certification application.

Estimated timelines for evaluation of certification is provided in Table 12-1.

Table 12-1
Estimated Timeline for the Certification Application Process

Action	Time	Determination	ARB Response
Preliminary Application Filed	60 days	Acceptable	Preliminary Application Accepted Test Site Approval Granted
Preliminary Application Filed	60 days	Unacceptable	Preliminary Application Returned with Notification of Deficiencies
Application Resubmitted	30 days	Acceptable	Preliminary Re-Application Accepted Test site Approved
Application Resubmitted	30 days	Unacceptable	Initial Re-Application Returned with Notation of Deficiencies
Final Application Complete	120 days	Acceptable	Executive Officer Issues Certification Executive Order
Final Application Complete	120 days	Unacceptable	Executive Officer Denies Certification

The application shall be written and signed by an authorized representative of the applicant, and shall include all of the items listed below.

(a) Description of Vapor Recovery System or Component (Section 12.1)
(b) Description of In-Station Diagnostics System (Section 12.2)
(c) Materials Compatibility with Fuels (Section 12.3)
(d) Evidence of Compatibility of the System or Component (Section 12.3)
(e) Evidence of Reliability of the System (Section 12.4)
(f) Installation, Operation, and Maintenance Requirements of the System or Component (Section 12.5)
(g) Evidence of Financial Responsibility of the Applicant (Section 12.6)
(h) A copy of the warranty (Section 12.7)
(i) Request for and information about proposed test station (Section 12.8)
(j) Notification of System Certification Holder, if applicable (Section 12.9)
(k) Vapor Recovery Equipment Defects (title 17) and Test Protocols (Section 12.10)
(l) Challenge Modes and Test Procedures (Section 12.11)
(m) Number of configurations (Section 12.12)
(n) If applicable; Bellows Insertion Force Specification and Test Procedure (Section 12.13)
(o) Other Information such as the Executive Officer may reasonably require. (Section 12.13)

12.1 Description of Vapor Recovery System or Component

The application shall include a complete description of the system or component concept, design and operation, including, but not limited to, the following items.

12.1.1 Identification of critical system or component operating parameters. An engineering evaluation of the system or component will be performed by the Executive Officer to evaluate any proposed specifications and to establish additional performance specifications if required.

12.1.2 Engineering drawings of system, components, and aboveground and underground piping and tank configurations for which certification is requested.

12.1.3 Engineering parameters for dispenser vapor system control boards and/or all vapor piping, pumps, nozzles, hanging hardware, vapor processor, etc.

12.1.4 Listing of components and evidence that the manufacturers of any components intended for use with the system and not manufactured by the applicant have been notified of the applicant's intent to obtain certification.

12.1.5 Applicable performance standards and specifications of components, specifically identifying those which exceed the minimum acceptable specifications and for which certification of superior performance is requested, and test results demonstrating compliance with these specifications.

12.1.6 Results of tests demonstrating that the system and components meet all the applicable performance standards. These tests shall be conducted by, or at the expense of, the applicant.

12.1.7 Any additional specifications of the system including, but not limited to, tank size, underground pipe sizes, lengths, fittings, volumes, material(s), etc.

12.1.8 Estimated retail price of the system.

12.1.9 For previously tested systems, identification of any and all new components and physical and operational characteristics, together with new test results obtained by the applicant.

12.2 Description of In-Station Diagnostics (ISD)

The applicant shall include the following documentation with the certification application.

12.2.1 A written description of the functional operation of the GDF vapor recovery ISD system.

12.2.2 A table providing the following information shall be included for each monitored component or system, as applicable:

(a) Corresponding fault code;
(b) Monitoring method or procedure for malfunction detection;
(c) Primary malfunction detection parameter and its type of output signal;
(d) Fault criteria limits used to evaluate output signal of primary parameter;
(e) Other monitored secondary parameters and conditions (in engineering units) necessary for malfunction detection;
(f) Monitoring time length and frequency of checks;
(g) Criteria for storing fault code;
(h) Criteria for notifying station operator; and
(i) Criteria used for determining out of range values and input component rationality checks.

12.2.3 A logic flowchart describing the general method of detecting malfunctions for each monitored emission-related component or system.

12.2.4 A written detailed description of the recommended inspection and maintenance procedures, including inspection intervals that will be provided to the gasoline dispensing facility operator.

12.2.5 A written detailed description of the training plan to train and certify system testers, repairers, installers, and rebuilders.

12.2.6 A written description of the manufacturer's recommended quality control checks.

12.2.7 A written description of calibration and diagnostic checks.

12.2.8 A list of system components that are monitored by the ISD system and test procedures for challenge mode testing. The Executive Officer may modify the list or test procedures based on an engineering evaluation. Additional procedures may be developed as necessary to verify that the system's self-check and self-test features perform accurately.

12.3 Compatibility

The applicant shall submit evidence of system compatibility, including the following:

12.3.1 Evidence of demonstrating compatibility between the Phase I vapor recovery system with any type of Standing Loss Control system with which the applicant wishes the Phase I system to be certified, as specified in Section 4.9

12.3.2 Evidence demonstrating compatibility between the Phase II vapor recovery system and ORVR-equipped vehicles shall be submitted, along with any test results demonstrating compatibility. ORVR compatibility testing shall comply with the provisions in Section 5.4.

12.3.3 Evidence demonstrating the compatibility of the Phase I and Standing Loss Control or Phase II system with any type of Phase I and Standing Loss Control system with which the applicant wishes the Phase II system to be certified, as specified in Sections 4.9 or 5.5 and 5.6. Continuous readings of pressure recordings in the aboveground storage tank, as well as challenge mode tests, may be used for this demonstration.

12.3.4 Evidence that the system can fuel any vehicle meeting state and federal fill pipe specifications and is capable of being fueled by a non-vapor-recovery nozzle.

12.3.5 The applicant shall provide information regarding the materials specifications of all components, including evidence of compatibility with all fuels in common use in California and approved as specified in Section 4.7. If the applicant is requesting a certification for use only with specified fuel formulations, the applicant shall clearly identify, in the application, the included and excluded fuel formulations for which certification is requested.

12.4 Reliability of the System

In order to ensure ongoing compliance, adequately protect public health, and protect the end-user, the reliability of the system shall be addressed in the application, including the following:

12.4.1 The expected life of system and components.

12.4.2 Description of tests conducted to ascertain compliance with performance standards and specifications for the expected life of the system or component, any procedures or mechanisms designed to correct problems, and test results.

12.4.3 Identification of and emission impact of possible failures of system, including component failures

12.4.4 Procedure and criteria for factory testing (integrity, pressure drop, etc.)

12.5 Installation, Operation, and Maintenance of the System

The installation, operation, and maintenance plan shall be submitted, and shall include at least the following items which the Executive Officer shall review and approve prior to implementation:

12.5.1 Installation, operation, and maintenance manuals of the system or component, including the ISD.

12.5.2 A plan for training installers, including a training contact person or contact telephone number, to train for the proper installation of the system.

12.5.3 A replacement parts program.

12.5.4 The estimated installation costs and yearly maintenance costs.

12.6 Evidence of Financial Responsibility

The applicant shall submit evidence of financial responsibility to ensure adequate protection to the end-user of the product as specified in Section 17.4.

12.7 Warranty

The applicant shall submit a copy of the warranty for the system, warranties for each component, and samples of component tags or equivalent method of meeting warranty requirements as specified in Section 17.5.

12.8 Test Station

12.8.1 Standing loss control shall be installed and tested on an AST that does not transfer gasoline. Phase I and Phase I/II vapor recovery systems shall be installed and tested at an operating gasoline dispensing facility for the purpose of certification testing. If the applicant can demonstrate that the vapor recovery system would be subject to the same use at a non-operating GDF as an operating GDF, then the use of a non-operating GDF may be allowed during the certification if approved by the Executive Officer.

12.8.2 The applicant shall make arrangements for the installation of standing loss control on an aboveground storage tank or the vapor recovery system in a gasoline dispensing facility meeting the requirements of Section 14.1.

12.8.3 The request for designation as a test site shall include the following information:

(a) Location of the facility;
(b) Verification of throughput for at least six months; and
(c) Hours of operation.

12.8.4 The applicant shall submit final construction diagrams of the proposed aboveground storage tank or test station. These drawings shall clearly identify the type of vapor recovery piping and connections, pipe slope, and type of storage tanks (i.e., single or double wall, steel, concrete, insulation, fiberglass, etc.). The Executive Officer may require Professional Engineer or Architect Approved As-Built drawings of the test site. If such drawings are not obtainable, the applicant may request the Executive Officer to accept alternatives sources of this information, such as detailed schematics of the vapor piping configuration and/or photographs.

12.9 Notification of Certified System Component Manufacturers ~~Certification Holder~~

If the applicant is not the manufacturer of all system components, the applicant shall include evidence that the applicant has notified all ~~the~~ component manufacturer(s) of the applicant's intended use of the component manufacturers' equipment in the vapor recovery system for which the application is being made.

~~12.9.1 When the applicant is requesting inclusion of one or more components on a certified system, the applicant shall notify the manufacturer, if any, named as the applicant or holder of the executive order for the certified system.~~

~~12.9.2 When the applicant is requesting certification of one or more components as part of a new system, the applicant shall notify all manufacturers.~~

12.10 Equipment Defect Identification and Test Protocols

The application shall identify where failure of system components may result in a vapor recovery equipment defect (VRED) as defined in Section 92006, title 17, CCR. Test protocols shall be developed by the applicant, and submitted with the certification application, along with test results, observations, or other analyses conducted by the applicant, to determine if the component or system failure meets the criteria of a VRED.

12.11 Challenge Modes and Test Protocols

The application shall identify potential challenge modes, as described in Section 13.7. Test protocols shall be developed and submitted by the applicant, and submitted with the certification application, along with test results, observations, or other analyses conducted by the applicant, to determine if the system meets the applicable standards and specifications when tested in challenge mode.

12.12 Number of Configurations

The applicant shall identify the number of configurations (aboveground storage tanks (in terms of capacity (gallon) and area (square feet) including vapor recovery systems, if applicable) for which certification is requested. For certification testing, the applicant shall specify and provide reasons in the application those configurations which represent a worst case scenario from an emission standpoint.

12.13 Other Information

12.13.1 The applicant shall provide any other information that the Executive Officer reasonably deems necessary

12.13.2 For a balance type system, the applicant shall provide a specification for bellows insertion force as specified in Section 6.1. The applicant will include a protocol to test the nozzle bellows compression force in the certification application. This procedure is subject to engineering evaluation and approval by the Executive Officer.

12.13.3 For an assist system, the applicant shall provide specifications for the nozzle pressure drop as specified in Section 7.1 and for the air to liquid ratio as specified in Section 7.2.

12.13.4 For a central vacuum assist system, the applicant shall provide specifications for the minimum and maximum vacuum levels and for the number of refueling points per vacuum device as specified in Sections 8.1 and 8.2, respectively.

12.13.5 For a system with a processor, the applicant shall provide the typical load on the processor and the processor operation time as specified in Sections 9.4 and 9.5, respectively.

13. EVALUATION OF THE APPLICATION

The application for certification of all systems and components shall be subjected to an engineering evaluation by the Executive Officer. The evaluation of the application shall include, but is not limited to, subsections 13.1 through 13.7.

13.1 Performance Standards and Specifications

The system and component performance standards and specifications identified by the applicant shall be reviewed to ensure that they include and conform to the applicable standards and specifications in Sections 3 through 10 of this Procedure.

13.2 Bench and Operational Testing Results

The procedures for, and results of, bench testing and operational testing contained in the application shall be reviewed. The review shall determine if the procedures adhere to required methodology and ensure that the results meet or exceed the standards and specifications in Sections 3 through 10 of this Procedure. The evaluation shall include a determination of necessary verification testing.

13.3 Evaluation of System Concept

The system concept shall be evaluated to ensure that it is consistent with the generally accepted principles of physics, chemistry, and engineering.

13.4 Materials Specifications and Compatibility with Fuel Formulations

The component materials specifications shall be reviewed to ensure chemical compatibility with gasoline and/or any oxygenates that may be present in gasoline on an ongoing or on a seasonal basis, as specified in Section 4.7. This review shall include consideration of the variations in gasoline formulations for octane differences and summer fuel and winter fuel.

13.5 Installation, Operation, and Maintenance Manuals

The installation, operation, and maintenance manuals for the system and components shall be reviewed for completeness (see Section 17.6). Routine maintenance procedures shall be reviewed to ensure adequacy and determine that the procedures are not unreasonable (see Section 17.6).

13.6 Vapor Recovery Equipment Defect Identification

13.6.1 The applicant's VRED test results, test procedure, and test protocol shall be reviewed and subject to an engineering evaluation by the Executive Officer. The engineering evaluation shall identify where the failure of system components shall result in a VRED as defined by Section 94006, title 17, CCR. Test protocols may be developed by the

applicant to determine if the component or system failure meets the criteria of a VRED. These test protocols, upon approval of the Executive Officer, are applied during certification testing as provided in section 14.4.1. The Executive Officer may, for good cause, require modification of, and/or testing in addition to, VRED testing proposed by the applicant.

13.6.2 All VRED mode test procedures, and the results of tests conducted by the applicant, shall be reviewed. Additionally, all VRED mode testing conducted during the certification process to verify the test results or further evaluate the systems shall be similarly reviewed.

13.7 Challenge Mode Determination

The applicant's Challenge Mode test results, test procedure, and test protocol shall be reviewed and subject to an engineering evaluation by the Executive Officer. The engineering evaluation shall determine if the component or system meets the applicable performance standards and specification under challenge mode testing. These test protocols, after engineering evaluation and upon approval of the Executive Officer, are applied during the certification testing as provided in Section 14.4.2. The ARB Executive Officer may, for good cause, require modification of, and/or testing in addition to, challenge mode testing proposed by the applicant.

13.8 Number of Configuration Determination

The Executive Officer shall determine whether the applicant's configuration selection represents a worst case scenario from an emission standpoint. Based on the engineering evaluation, the Executive Officer may concur with the applicant's selection or select additional configurations for certification testing.

14. VAPOR RECOVERY SYSTEM CERTIFICATION TESTING

The Executive Officer shall conduct, or shall contract for and observe, testing of vapor recovery systems for the purpose of certification. Except as otherwise specified in Section 15 of this procedure, vapor recovery systems shall be subjected to evaluation and testing pursuant to the applicable performance standards, performance specifications, and test procedures specified in Sections 3 through 10 of this procedure.

Certification testing of vapor recovery systems shall be conducted only after the preliminary application for certification has been found to be acceptable. Some tests may be conducted more than once, to characterize the performance of complete systems and/or system components over time. Except as otherwise provided in Sections 3, 18, and 19 of this procedure, only complete systems shall be certified.

Failure of any component during testing of a standing loss control (SLC), Phase I, or Phase II system shall be cause for termination of the certification test, except as noted below. Any SLC, Phase I, or Phase II system and/or component test failures must be investigated by the applicant and an explanation provided to the Executive Officer within one week of the test failure discovery. The Executive Officer may extend this one week period for good cause. The Executive Officer may consider information and circumstances presented by the applicant, including previous certification testing, to demonstrate that the failure was attributable to something other than the design of the component and/or system, and may allow further testing without modification.

Any applicant or representative of an applicant found to have performed unauthorized maintenance or to have attempted to conceal of falsify information, including test results and/or equipment failures may be subject to civil and criminal penalties and testing of the system of component shall be terminated.

Phase I

As specified in Section 4.9, Phase I vapor recovery systems shall be certified only in facilities equipped with a certified SLC system. During Phase I system certifications, the associated SLC system shall be subject to all of the standards and specifications in Section 3. Monitoring of SLC system performances shall be conducted for the purpose of demonstrating compatibility, as required by Section 4.9, as well as to insure that SLC systems are functioning properly during the Phase I certification test. Any SLC components identified as not performing correctly shall be replaced and the Phase I system certification continued. However, Phase I system test data collected during any period associated with a SLC system test failure shall be evaluated for validity.

During Phase I system certifications, failure of any SLC components that are determined to be unrelated to the performance of the Phase I system shall not be cause for termination of the Phase I system certification. During Phase I certification test, if any SLC component is identified as having performance deficiencies, then a more thorough investigation of the SLC component/system performance will be initiated by the Executive Officer.

During Phase I system certification, any SLC system and/or component performance deficiencies that are determined to be related to the performance of the Phase I system shall be cause for the termination of the Phase I system certification, as provided by Section 4.9.

Phase II

As specified in Sections 5.5 and 5.6, Phase II vapor recovery systems shall be certified only in facilities equipped with a certified Phase I and SLC systems.

During Phase II system certifications, the associated Phase I and SLC systems shall be subject to all of the standards and specifications in Section 3 and 4. Monitoring of Phase I and SLC system performances shall be conducted for the purpose of demonstrating compatibility, as required by Sections 5.5 and 5.6, as well as to insure that the Phase I and SLC systems are functioning properly during the Phase II certification test. Any Phase I or SLC components identified as not performing correctly shall be replaced and the Phase II system certification continued. However, Phase II system test data collected during any period associated with a Phase I or SLC system test failure shall be evaluated for validity.

During Phase II system certifications, failure of any Phase I or SLC components that are determined to be unrelated to the performance of the Phase II system shall not be cause for termination of the Phase II system certification. During Phase II certification tests, if any Phase I or SLC component is identified as having performance deficiencies, then a more thorough investigation of the Phase I or SLC component/system performance will be initiated by the Executive Officer.

During Phase II system certification, any Phase I or SLC system and/or component performance deficiencies that are determined to be related to the performance of the Phase II system shall be cause for termination of the Phase II system certification, as provided by Sections 5.5 and 5.6.

14.1 Test Site for Field Testing of Vapor Recovery Systems

The applicant shall make arrangements for the appropriate vapor recovery system to be installed on one or more ASTs that do not transfer gasoline for standing loss control certification testing, or on one or more GDFs for Phase I or II system certification testing. The applicant shall request, in writing, approval of the AST or GDF as a test site from the Executive Officer. Upon determining that the GDF meets all of the following criteria, the Executive Officer shall, in writing, designate the selected location as a test site, and exempt it from any state or local district prohibition against the installation of uncertified vapor recovery equipment. This shall not exempt it from the prohibition against the offer for sale, or sale, of uncertified equipment. The vapor recovery system shall be installed throughout the entire facility (note this requirement applies to the primary certification test site). The Executive Officer may require that the system be installed in more than one facility for the purpose of testing.

14.1.1 For the purposes of evaluating Phase I or Phase II vapor recovery system, the test site shall have a minimum monthly gasoline throughput of 1,500 gallons/month, as demonstrated over a consecutive six month period. The throughput data submitted in the application shall be the most current data available. The test site throughput shall also be shown to comply with these criteria for the six months prior to the start of the operational tests.

If the facility is equipped with one hose and nozzle for each gasoline grade, rather than a unihose configuration, the minimum throughput requirement shall apply to the gasoline grade with the highest throughput.

14.1.2 The aboveground storage tank or test station shall be located within 100 miles of the ARB Sacramento offices. When a suitable location for testing cannot be located within 100 miles of the ARB offices, the Executive Officer may, for good cause, grant approval of a test station elsewhere, provided that all the necessary testing can be conducted at that location. The applicant shall be responsible for any additional costs, such as travel, associated with that location.

14.1.3 Continuous access to the aboveground storage tank or test site by ARB staff, without prior notification, shall be provided. Every effort will be made to minimize inconvenience to the owner/operator of the facility. If testing deemed necessary cannot reasonably be conducted, the facility shall be deemed unacceptable and the test shall be terminated.

14.1.4 If test status is terminated for any reason, uncertified equipment shall be removed within sixty (60) days, unless the Executive Officer extends the time in writing. The local district with jurisdiction over the facility may impose a shorter time.

14.1.5 All test data collected by the applicant at the test site shall be made available to the Executive Officer within fifteen (15) working days. Continuous data, such as temperature monitoring data, shall be submitted in bimonthly increments within fifteen (15) days of the last day of the increment. Failure to provide this information may result in extension or termination of the test. The Executive Officer may specify the format in which the data is to be submitted.

14.1.6 Test site designation may be requested by the applicant, or by another person, for facilities other than the certification test site(s), for the purpose of research and development, or independent evaluation of a system prior to its certification. Approval of such a test site shall be at the discretion of the Executive Officer. The test site shall be subject to all of the above conditions with the exception of 14.1.1 and 14.1.2.

14.1.7 For testing conducted pursuant to Sections 19 and 20, SLC or Phase I certification test sites configured with fewer than three P/V valves may be approved by the Executive Officer

14.1.8 Phase II certification test sites will be configured with one to three P/V vent valves, each with an associated ball valve.

14.2 Bench Testing of Components

Components identified by the engineering evaluation as requiring bench testing to verify performance standards and specification shall be submitted to the Executive Officer prior to commencement of operational testing. This testing may be repeated during and/or after the operational testing.

14.3 Operational Test Duration

14.3.1 All vapor recovery systems shall be subjected to an operational test. The duration of the Phase I and Phase II system operational testing shall be at least 180 days, **and for a minimum of 9000 gallons of gasoline throughput,** except as otherwise provided in Section 19. The duration of the SLC system operational test is specified in section 3.2.

14.3.2 No maintenance shall be performed other than that which is specified in the installation, operation, and maintenance manual. Such maintenance as is routine and necessary shall be performed only after approval by the Executive Officer. Occurrences beyond the reasonable control of the applicant, such as vandalism or accidental damage by customers (e.g., drive-offs), shall not be considered cause for failure of the systems.

14.3.3 Except where it would cause a safety problem, maintenance shall not be performed until approval by the Executive Officer has been obtained. In those situations that require immediate action to avoid potential safety problems, maintenance may be performed immediately and the Executive Officer notified as soon as practicable.

14.3.4 For the purpose of SLC system certification, the temperature in the AST and ambient temperature shall be monitored and recorded continuously throughout the operational test in accordance with TP-206.1.

14.3.5 Tests of the performance of the system and/or components shall be conducted periodically throughout the operational test period. If the results of such tests, when extrapolated through the end of the warranty period, show a change that result in the degradation of a performance standard or specification, the Executive Officer may extend or terminate the operational test.

14.4 Equipment Defect and Challenge Mode Testing

14.4.1 Equipment Defect Testing

Testing to determine vapor recovery equipment defects as defined by Section 94006 of title 17, CCR, shall be conducted as part of

certification testing. Vapor recovery equipment defect testing may be allowed during the operational test only when the Executive Officer has determined that the testing does not affect the normal operation of the system.

14.4.2 Challenge Mode Testing

Testing to verify that the system meets the applicable standards under various GDF operating conditions may be conducted as part of certification testing. Challenge mode tests may be allowed during the operational test only when the Executive Officer has determined that the testing does not affect the normal operation of the system.

14.5 Efficiency and/or Emission Factor Test

Testing to determine the efficiency and/or emission factor of the vapor recovery system shall be conducted in accordance with the applicable test procedures specified in Section 3, 4, or 5 of this procedure. Additional testing may be required if the Executive Officer deems it necessary. The additional testing may include, but is not limited to the determination of the Reid Vapor Pressure of the fuel, the volume and/or mass in the vapor return path, fuel and/or tank temperature, and the uncontrolled emission factor.

14.5.1 Standing Loss Systems. A test of the static pressure integrity of the Phase I system shall be conducted, in accordance with TP-206.3, no less than 24 hours or more than seven days prior to conducting TP-206.1 or TP-206.2. The static pressure integrity test shall be conducted not more than 48 hours after the completion of these tests as well. Failure of the static pressure integrity test shall invalidate the TP-206.1 or TP-206.2 test results unless the Executive Officer determines that the integrity failure did not result in any significant unmeasured emissions.

14.5.2 Phase I Systems. A test of the static pressure integrity of the Phase I system shall be conducted, in accordance with TP-206.3, no less than 24 hours or more than seven days prior to conducting TP-201.1 or TP-201.1A. Testing, in accordance with TP-201.1 and/or TP-201.1A, shall be conducted at delivery rates typical and representative of the facilities for which certification is requested. More than one test may be required to accomplish this determination. Certification may be limited to specified maximum loading rates. The static pressure integrity of the vapor recovery system shall be verified as soon as possible, but not more than 48 hours, after the completion of this test. Failure of the static pressure integrity test shall invalidate the TP-201.1 or TP-201.1A test results unless the Executive Officer determines that the integrity failure did not result in any significant unmeasured emissions.

14.5.3 Phase II Systems. A test of the static pressure integrity of the Phase II system shall be conducted, in accordance with TP-206.3, no more than seven days and no less than three days prior to conducting TP-201.2. The static pressure integrity of the vapor recovery system, including all test equipment installed for the purpose of conducting TP-201.2, shall be verified as soon as possible, but not more than 48 hours, after the completion of this test. Failure of the static pressure integrity test shall invalidate the TP-201.2 test unless the Executive Officer determines that the integrity failure did not result in any significant unmeasured emissions.

14.6 Vehicle Matrix

A representative matrix of ~~20~~ **30 non-ORVR** vehicles shall be used when testing to determine the Phase II efficiency for the performance standard. The composition of the representative vehicle matrix shall be determined for each calendar year by the Executive Officer in accordance with TP-201.2A (Determination of Vehicle Matrix for Phase II Systems).

14.6.1 Vehicles will be tested as they enter the dispensing facility ("first in" basis) until a specific matrix block of the distribution is filled.

~~14.6.2 The vehicle matrix shall include a population of ORVR-equipped vehicles consistent with the distribution of ORVR-equipped vehicles in the State of California.~~

14.6.~~3~~**2** The Executive Officer may exclude any vehicle that fails to comply with the vehicle fill pipe specifications ("Specifications for Fill Pipes and Openings of Motor Vehicle Fuel Tanks" incorporated by reference in title 13, CCR, Section 2235).

14.6.4**3** The Executive Officer may exclude a vehicle prior to its dispensing episode only if such exclusion and its reason is documented; e.g. unusual facility conditions beyond the applicant's control or unusual modifications to the vehicle. All data required by the test procedure shall be taken for such vehicles for subsequent review and possible reversal of the exclusion decision made during the test. The only other reasons for excluding a vehicle from the test fleet are incomplete data or the factors in TP-201.2.

14.6.~~5~~**4** Additional vehicles may be chosen for testing at the test site by the Executive Officer. The vehicles shall be chosen, according to the Executive Officer's judgment, so that any of the first ~~20~~ **30 non-ORVR** vehicles, which may later be found to have invalid data associated with them, shall have replacements from among the additional vehicles on a "first in" basis.

14.6.~~6~~**5** A matrix of fewer than ~~20~~ **30 non-ORVR** ~~(10 ORVR and 10 non-ORVR)~~ vehicles may be made by deleting up to a maximum of two vehicles ~~(one ORVR and one non-ORVR)~~ by reducing the representation in any cell or combination of cells of the vehicle matrix, subject to the following requirements for each candidate reduced cell.

(a) No cell shall be reduced by more than one vehicle
(b) At least one dispensing episode has already been tested in each cell.
(c) None of the other dispensing episodes in the cell have yielded field data which, in the Executive Officer's judgment, would cause a failure to meet the standards specified in Section 5.1.
(d) All tested dispensing episodes in all cells have yielded field data that, in the Executive Officer's judgment, would yield valid test results after subsequent review and evaluation.

15. ALTERNATE TEST PROCEDURES AND INSPECTION PROCEDURES

Test procedures other than those specified in this certification procedure shall be used only if prior written approval is obtained from the Executive Officer. A test procedure is a methodology used to determine, with a high degree of accuracy, precision, and reproducibility, the value of a specified parameter. Once the test procedure is conducted, the results are compared to the applicable performance standard to determine the compliance status of the facility. Test procedures are subject to the provisions of Section 41954(h) of the H&SC.

15.1 Alternate Test Procedures for Certification Testing

The Executive Officer shall approve, as required, those procedures necessary to verify the proper performance of the system.

15.2 Request for Approval of Alternate Test Procedure

Any person may request approval of an alternative test procedure. The request shall include the proposed test procedure, including equipment specifications and, if appropriate, all necessary equipment for conducting the test. If training is required to properly conduct the test, the proposed training program shall be included.

15.3 Response to Request

The Executive Officer shall respond within fifteen (15) days of receipt of a request for approval and indicating that a formal response will be sent within sixty (60) days. If the Executive Officer determines that an adequate evaluation cannot be completed within the allotted time, the Executive Officer shall explain the reason for the delay, and will include the increments of progress such as test protocol review and comment, testing, data review, and final determination. If the request is determined to be incomplete or

unacceptable, Executive Officer shall respond with identification of any deficiencies. The Executive Officer shall issue a determination regarding the alternate procedure within sixty (60) days of receipt of an acceptable request.

15.4 Testing of Alternate Test Procedures

All testing to determine the acceptability of the procedure shall be conducted by ARB staff, or by a third party responsible to and under the direction of ARB. Testing shall be conducted in accordance with the written procedures and instructions provided. The testing shall, at a minimum, consist of nine sets of data pairs, pursuant to USEPA Reference Method 301, “Field Validation of Pollutant Measurement Methods from Various Waste Media”, 40 CFR Part 63, Appendix A, (December 29, 1992). Criteria established in USEPA Reference Method 301 shall be used to determine whether equivalency between the two test methods exists. For situations where method 301 is not directly applicable, the Executive Officer shall establish equivalence based on the concepts of comparison with the established method and statistical analysis of bias and variance. Method Approval of the procedure shall be granted, on a case-by-case basis, only after all necessary testing has been conducted. Because of the evolving nature of technology and procedures for vapor recovery systems, such approval may or may not be granted in subsequent cases without a new request for approval and additional testing to determine equivalency. If, after approval is granted, subsequent information demonstrates that equivalency between the two methods no longer meets the USEPA Method 301 requirements, the Executive Officer shall revoke the alternate status of the procedure.

15.5 Documentation of Alternate Test Procedures

Any such approvals for alternate test procedures and the evaluation testing results shall be maintained in the Executive Officer's files and shall be made available upon request. Any time an alternate procedure and the reference procedure are both conducted and yield different results, the results determined by the reference procedure shall be considered the true and correct results.

15.6 Inspection Procedures

Inspection procedures are methodologies that are developed to determine compliance based on applicable performance standards or specifications. Inspection procedures are typically, but not necessarily, parametric in nature and possess a built-in factor of safety, usually at least twice the applicable standard or specification. Inspection procedures are not subject to Section 41954(h) of the H&SC.

Upon submittal of an inspection procedure to CARB, the Executive Officer shall respond within thirty (30) days, providing the applicant with a

determination of the applicability of Section 41960.2(d) or Section 41960.2(e) of the H&SC.

16. DOCUMENTATION OF CERTIFICATION

Documentation of certification shall be in the form of an Executive Order listing the criteria requirements of installation and operation of a certified system.

16.1 Executive Order

The certification Executive Order shall include the following items:

16.1.1 A list of components certified for use with the system.
16.1.2 Applicable Performance Standards, Performance Specifications and Test Procedures.
16.1.3 Applicable Operating Parameters and Limitations.
16.1.4 Warranty period(s).
16.1.5 Factory testing requirements, if applicable.

16.2 Summary of Certification Process

A summary of the certification process for each certified system shall be prepared. It shall contain documentation of the successful completion of all applicable portions of the requirements contained in this Certification Procedure. In addition, all problems encountered throughout the certification process, any changes made to address the identified problems, the location of the test station(s), the types of testing performed, the frequency and/or duration of any testing or monitoring, as appropriate, and any other pertinent information about the evaluation process shall be contained in this summary.

17. DURATION AND CONDITIONS OF CERTIFICATION

Vapor recovery system certifications shall specify the duration and conditions of certification.

17.1 Duration of System Certification

Vapor recovery systems shall be certified for a period of four years. The certification Executive Order shall specify the date on which the certification shall expire if it is not renewed as specified in Section 18.

17.2 One Vapor Recovery System per AST System

No more than one certified Phase II vapor recovery system may be installed on each aboveground storage tank (AST) system unless the Phase II system has been specifically certified to be used in combination. For facilities with dedicated vapor piping, each aboveground storage tank and associated

dispensing points shall be considered an AST system, and different AST systems may have different vapor recovery systems. For facilities with manifolded vapor piping connecting storage tanks, all the manifolded tanks and associated dispensing points are considered one AST system, and only one certified Phase II vapor recovery system may be installed in conjunction with that AST system.

17.3 Certification Not Transferable

Upon successful completion of all the requirements, certification shall be issued to the company or individual requesting certification, as the Executive Officer deems appropriate. If the ownership, control or significant assets of the certification holder are changed as the result of a merger, acquisition or any other type of transfer, the expiration date of the certification shall remain unchanged. However, no person shall offer for sale, sell, or install any system or component covered by the certification unless the system or component is recertified under the new ownership, or, in the case of a component, is otherwise certified. Systems installed prior to the transfer shall be subject to the specifications contained in Section 20 of this procedure.

17.4 Financial Responsibility

The adequacy of the (1) methods of distribution, (2) replacement parts program, (3) financial responsibility of applicant and/or manufacturer, and (4) other factors affecting the economic interests of the system purchaser shall be evaluated by the Executive Officer and determined to be satisfactory to protect the purchaser. A determination of financial responsibility by the Executive Officer shall not be deemed to be a guarantee or endorsement of the manufacturer or applicant.

If no system has yet been certified that meets additional or amended performance standards and specifications, as provided in Section 2.4, the applicant is also requested to provide evidence of the commitment of financial investors for the commercial manufacture of the system, a projected market demand of the system as milestones for implementation of the plan, an inventory of equipment ready for shipment and a list of suppliers and subcontractors which are part of the manufacturing plan.

17.5 Warranty

The requirements of this shall apply with equal stringency both to the original applicant and to re-builders applying for certification. For systems that include components not manufactured by the applicant, the applicant shall provide information that shows that all components meet the following requirements:

17.5.1 The applicant and/or manufacturer of the vapor recovery system equipment shall provide a warranty for the vapor recovery system and

components, including all hanging hardware, to the initial purchaser and any subsequent purchaser within the warranty period. This warranty shall include the ongoing compliance with all applicable performance standards and specifications. The applicant and/or the manufacturer may specify that the warranty is contingent upon the use of trained installers.

17.5.2 The minimum warranty shall be for one year from the date of installation for all systems and components. The applicant may request certification for a warranty period exceeding the minimum one-year requirement.

17.5.3 The manufacturer of any vapor recovery system or component shall include a warranty tag with the certified equipment. The tag shall contain at least the following information:

(a) Notice of warranty period;
(b) Date of manufacture, or where date is located on component
(c) Shelf life of equipment or sell-by date, if applicable;
(d) A statement that the component was factory tested and met all applicable performance standards and specifications; and
(e) A listing of the performance standards and/or specifications to which it was certified.

17.5.4 The Executive Officer shall certify only those systems which, on the basis of an engineering evaluation of such system's component qualities, design, and test performance, can be expected to comply with such system's certification conditions over the one-year warranty period specified above.

17.6 Installation, Operation, and Maintenance of the System

Systems requiring unreasonable maintenance or inspection/maintenance frequencies, as determined by the Executive Officer, shall not be certified. The manufacturer of any vapor recovery system or component shall submit manual(s) for all installation, operation, and maintenance procedures with the application as provided by Section 12.5. This manual(s) shall be reviewed during the certification process and the certification shall not be issued until the Executive Officer has approved the manual(s).

17.6.1 The manual(s) shall include all requirements for the proper installation of the system and/or component. The manual(s) shall include recommended maintenance and inspection procedures and equipment performance procedures, including simple tests the operator can use to verify that the system or component is operating in compliance with all applicable requirements. The Executive Officer may require the inclusion of additional procedures.

17.6.2 No changes shall be made to ARB Approved Manuals without the Executive Officer's prior written approval.

17.7 Identification of System Components

17.7.1 All components for vapor recovery systems shall be permanently identified with the manufacturer's name, part number, and, if applicable, a unique serial number. This requirement does not apply to replacement subparts of the primary component. Specific components may be exempted from this requirement if the Executive Officer determines, in writing, that this is not feasible or appropriate.

17.7.2 Nozzle serial numbers shall be permanently affixed to, or stamped on, the nozzle body and easily accessible for inspection. The location of the serial number shall be evaluated and approved by the Executive Officer prior to certification.

17.8 Revocation of Certifications

The certification of any system determined not to be achieving the applicable performance standards and specification listed in CP-206 may be revoked. The Executive Officer may conduct testing for the purpose of investigation of or verification of potential system deficiencies

Revoked systems may remain in use for the remainder of their useful life or for up to four years after the revocation, whichever is shorter, provided they comply with all of the requirements of Section 20. Systems with revoked certifications shall not be installed on new installations or major modifications of existing installations.

18. CERTIFICATION RENEWAL

At least eighteen (18) months prior to expiration of the certification period, the applicant may request to renew the certification. System certifications shall be renewed without additional testing if no data demonstrating system deficiencies is found or developed prior to the expiration date. During the four-year certification period, system deficiencies shall be identified through periodic equipment audits, complaint investigations, certification or compliance tests, surveys, or other sources of information. If deficiencies are documented, they shall be resolved to the satisfaction of the ARB Executive Officer or the certification shall expire. The ARB Executive Officer may extend certification if resolution of system deficiencies appears likely or if additional time is required to gather and evaluate information.

The renewal process, along with the sections of this document that describe them, are outlined below.

(a) Request for Renewal	Section 18.1
(b) Review of the Request	Section 18.2
(c) Evaluation of System Deficiencies	Section 18.3

(d) Letter of Intent	Section 18.4
(e) Renewal of Executive Order	Section 18.5
(f) Denial of Executive Officer Approval	Section 18.6

If no request for renewal is received by the ARB within eighteen (18) months of the certification expiration date, the Executive Officer shall send a "Notice of Pending Expiration" to the holder of the Executive Order. Table18-1 provides an estimated timeline for the renewal process. The timeline is intended to serve as a guide to provide approximate target schedules for completion of steps in the renewal process.

Each applicant submitting a certification renewal request shall be charged fees not to exceed the actual cost of evaluating and/or testing the system to determine whether it qualifies for renewal. Refer to Section 11.1 for more information on Fee Payment.

18.1 Request for Renewal

The request for renewal shall be written and signed by an authorized representative, and shall include the items listed below:

18.1.1 The Executive Order Number to be renewed;

18.1.2 Identification of any system or component deficiencies through warranty claims or other information such as:
- (a) User feedback
- (b) Contractor/Tester
- (c) Distributors

18.1.3 Amendments to the Executive Order such as:
- (a) Warranty information
- (b) Installation, Operation, and Maintenance Manual
- (c) System or component drawings
- (d) Component modification

18.1.4 Updates to the training program;

18.1.5 Factory Testing Requirements;

18.1.6 Agency approvals or determinations, if any system modifications have been made since the original approval/determinations (to be submitted prior to approval of EO amendment, see Section 1.1), and

18.1.7 Other information such as the Executive Officer may reasonably require.

18.2 Review Request

The Executive Officer shall review the request and determine if any information provided warrants further evaluation/testing or if amendments to the Executive Order are needed. The applicant will be notified within 60 days of the receipt of the request and whether the submission of additional information is required.

18.3 Evaluation of System Deficiencies

In addition to the information provided in Section 18.1, the Executive Officer shall solicit information on system or component deficiencies through equipment audits, complaint investigations, certification or compliance tests, surveys, VRED data (if applicable), and any deficiencies identified by District staff, or other sources of information. The Executive Officer may conduct testing to investigate and/or verify system or component deficiencies. Testing to evaluate component modifications, VRED lists (if applicable), to demonstrate compatibility, or for challenge mode determinations, will be subject to the applicable sections of CP-206. If potential deficiencies are noted, an evaluation will be conducted to determine if:

18.3.1 The deficiency has been or is in the process of being resolved;

18.3.2 System/component modification(s) are necessary;

18.3.3 Executive Order modifications are necessary;

18.3.4 Additional testing is required.

18.4 Letter of Intent

After the review has been completed, a letter of intent will be issued to either (1) renew the Executive Order or (2) allow the Executive Order to expire. Conditions for expired certifications are discussed in Section 19 of this certification procedure. The letter of intent should be issued prior to the Executive Order expiration date but will not be issued prior to completion of the evaluation process described in Sections 18.1, 18.2, and 18.3. If the evaluation process is not complete and the letter of intent is not issued prior to the expiration date then the Executive Officer may determine that installation of the system at new facilities or major modifications will not be allowed during the extension period.

The Executive Officer may allow a certification extension if:

18.4.1 Resolution is likely but renewal time is insufficient; or

18.4.2 Additional time is necessary to gather and evaluate information.

18.5 Renewal of Executive Order

Executive Orders approved for renewal shall be valid for a period of four (4) years.

18.6 Denial of Executive Order Renewal

System certifications shall not be renewed if the Executive Officer determines that the performance standards and/or specifications in the Executive Order and CP-206 fail to be met. Non-renewed systems may remain in use for the remainder of their useful life or for up to four (4) years after the expiration date, whichever is shorter, provided the requirements of Section 20 are met.

Table 18-1
Estimated Timeline for the Renewal Process

Action	By	Time before Expiration
Submittal of renewal request	Applicant	18 months
Notice of pending expiration (if no renewal request received)	ARB	18 months
Solicitation of system information	ARB	18 months (or at time of receipt of request)
Application review and initial response	ARB	
Renewal request documentation completed	ARB/Applicant	15 months
Submittal of system information for other agency approval/determinations	Applicant	12 months
Draft Testing protocol and site identification	ARB/Applicant	14 months
Seal site/start test	ARB	12 months
End testing	ARB	11 to 6 months
Letter of Intent and draft Executive Order	ARB	3 months
Final Executive Order	ARB	0 months

19. AMENDMENTS TO EXECUTIVE ORDERS

Amendments to Executive Orders may be requested to add alternate or replacement components to a certified system. Alternate or replacement components may be modifications to originally certified components, components originally certified on another system, or new components.

Sections of this document that describe the process to amend an EO are outlined below.

(a) Request for Amendment	Section 19.1
(b) Review of the Request	Section 19.2
(c) Testing	Section 19.3
(d) Letter of Intent	Section 19.4
(e) Issuance of Executive Order	Section 19.5

19.1 Request for Amendment

The request for amendment shall be written and signed by an authorized representative of the applicant, and shall include the items listed below:

19.1.1 Executive Order to be amended;

19.1.2 Description of change;

19.1.3 Changes to the Executive Order such as:
(a) System or component drawings
(b) Installation, Operations, and Maintenance Manual
(c) Fuel and System Compatibility

19.1.4 Agency approvals or determinations (to be submitted prior to approval of EO amendment, see Section 1.1);

19.1.5 Updates to the training program;

19.1.6 Applicable information specified in Section ~~11~~ **12** ; and

19.1.7 Other information such as the Executive Officer may reasonably require.

19.2 Review of the Request

Requests for alternate or replacement components, equipment reconfigurations, or software changes will be subjected to an engineering evaluation to determine the level of testing required. The Executive Officer may require full operational testing of at least 180 days (30 days for Standing Loss Controls that attenuate temperature), allow abbreviated and/or limited operational testing, or determine that a component modification does not

affect the performance of the vapor recovery system and therefore no testing is required.

General criteria to be considered when determining the level of testing are as follows:

(a) extent of physical changes to the component;
(b) extent of material changes to the component;
(c) changes that may affect the durability of the component;
(d) whether performance specifications are the same;
(e) similarity of system designs (i.e. for component transfers); and
(f) information from previous certification testing.

19.2.1 Modified Components

Modified components (i.e., any changes made to vapor recovery components certified as part of a system) may be certified if testing demonstrates that performance standards and specifications will continue to be achieved. The level and duration of operational and/or other testing will be determined by the Executive Officer based on an engineering evaluation.

19.2.2 Transfer of Components from Another Certified System

Components certified with a system may subsequently be considered for use with another certified system design provided that the performance standards and specifications of the components, as specified in the application for the system, are equivalent. Performance standards and specifications, and compatibility, are to be verified by testing and/or engineering evaluation.

Abbreviated/limited operational testing may be considered since the component has previously undergone 180-day/full certification testing as part of another system.

19.2.3 New Component(s) that have not been Previously Certified on a System.

Components that have not previously been certified with a system, whether for use as an alternate or replacement component, shall be required to undergo operational testing of at least 180 days. Limited operational testing may be considered for such components, if determined to be appropriate by the Executive Officer.

19.2.4 Components that do not affect the performance of the vapor recovery system.

Certification shall not be required for components, either new or modified, determined by the Executive Officer not to affect the performance of the vapor recovery system. An engineering evaluation

shall be conducted to document that the change will not affect the performance of the vapor recovery system. The Executive Officer shall notify the applicant in writing of the determination. However, in some cases, such as when a part number changes, an amendment to the Executive Order may be required.

19.2.5 Other Amendments to Executive Orders

(a) System Configurations

Alternative configurations of components of a certified system may be considered for certification based on limited and abbreviated testing. Examples of alternative system configurations include dual fill or remote fill for Phase I and processor placement or vapor piping options for Phase II.

(b) Software Updates

Software revisions of previously certified software components may be considered for certification with limited and/or abbreviated testing. The software change may be approved with no testing if the Executive Officer finds that the software modifications do not affect the vapor recovery system or in-station diagnostic system performance.

19.3 Testing

System or component modifications shall be subjected to sufficient operational, challenge mode, and/or VRED testing to verify the performance and durability of the modified system relative to the certified system that was originally tested.

The level of operational testing to be required is determined as outlined in Section 19.2. Normally, full operational testing of at least 180 days (30 days for Standing Loss Controls that attenuate temperature) is required. Abbreviated and/or limited operational tests may be allowed in some cases, at the discretion of the Executive Officer. If operational tests are abbreviated, the minimum duration (and gasoline throughput requirement) will be specified by the Executive Officer. The test procedure and test frequency requirements for limited operational tests will be specified by the Executive Officer.

If operational testing is required, then the applicant will choose an appropriate test site meeting the requirements of Section 14.1. The applicant shall submit sufficient information to demonstrate that the requirements of Section 12.8 are met.

19.4 Letter of Intent

A letter shall be sent to the applicant stating the Executive Officer's intent to either issue the amended Executive Order or deny the request.

19.5 Issuance of Executive Order

The original expiration date shall be maintained for all Executive Order amendments unless a renewal, as described in Section 18, is specifically requested and approved.

Previous versions of the Executive Order are superseded, as discussed in Section 20.

20. REPLACEMENT OF COMPONENTS OR PARTS OF A SYSTEM WITH A TERMINATED, REVOKED, SUPERCEDED, OR EXPIRED CERTIFICATION

This section applies to systems for which the certification was terminated, revoked, superseded, or has expired. Systems that were installed as of the operative date of a new standard, or that are otherwise subject to Health and Safety Code Section 41956.1, may remain in use for the remainder of their useful life or for up to four (4) years after the effective date of the new standard or the date of revocation, whichever is shorter, provided they comply with all of the specifications of this section. Installed systems that have superseded or expired Executive Orders, unless renewed in accordance with Section 18, may remain in use for up to four (4) years after the expiration date of the Executive Order, provided they comply with all the specifications of Section 20.

20.1 Component and Replacement Parts

Components and replacement parts meeting the currently and prospectively operative performance standards or specifications may be approved for use as a replacement part with the no-longer-certified system for the remainder of the allowable in-use period of the system.

When an approved, compatible component or replacement part that meets the operative standards or specification is determined to be commercially available, only that component or replacement part shall be installed. Approval shall not require the replacement of already-installed equipment prior to the end of the useful life of that part or component. The approved replacement component shall be considered to be commercially available if that component can be shipped within three weeks of the receipt of an order by the manufacturer of the component.

20.2 Component or Replacement Part Not Meeting Specifications

A component or replacement part not meeting the currently operative performance standards or specifications, but which was certified for use with the system, shall be used as a replacement only if no compatible

component or part that meets the new standards or specifications has been approved as a replacement part.

20.3 Component or Part Not Certified with System and Not Meeting Specifications

A component or part that was not certified for use with the system, and that does not meet all of the currently operative standards or specifications may be approved as a replacement part or component for use on the system provided that there are no other commercially available certified parts meeting the most current performance standards or specifications.

20.4 Procedure for Approval of Replacement Parts

20.4.1 A request shall be submitted to the Executive Officer.

20.4.2 The request shall include the information outlined in Section 18.1 and information demonstrating that the component is compatible with the system.

20.4.3 Requests for replacement parts will be subjected to an engineering evaluation to determine the level of testing required. The Executive Officer may require full operational testing of at least 180 days and other certification tests (e.g. VRED or challenge), allow abbreviated and/or limited operational testing, or determine that additional testing is not necessary.

General criteria to be considered when determining the level of testing are as follows:

(a) similarity of system designs;

(b) information from previous certification testing; and

(c) compatibility of the replacement part.

20.4.4 The Executive Officer shall issue an approval letter to authorize the use of the approved replacement part and to detail any modification to the Executive Order for which the part is approved. Requests not granted shall be documented with a disapproval letter.

21. REQUIREMENTS FOR, AND CERTIFICATION OF, LOW PERMEATION HOSES

All hoses which carry liquid fuel against the outermost hose wall shall permeate at a rate of no more than 10.0 grams per square meters per day ($g/m^2/day$) as determined by UL 330 (7th ed.) - Underwriters Laboratories' Standard for Hose and Hose Assemblies for Dispensing Flammable Liquids. Use of a low permeation hose certified per CP-201 will satisfy the testing portion of this section.

The UL 330 (7th ed.) testing results shall comprise all of the certification testing for

certification as a low permeation hose.

21.1 Request for Certification

If UL 330 (7th ed.) testing is not conducted by the Executive Officer, then the Executive Officer shall be made a beneficiary of the data within the contract of the applicant and the testing facility. All data and documentation relevant to determining the permeation rate of the hose, as described in section 15 of UL 330 (7th ed.), shall be transmitted to the Executive Officer by the testing facility, concurrently when transmitted to the applicant.

The request for certification shall be written and signed by an authorized representative of the applicant, and shall include the items listed below:

21.1.1 The applicant shall submit evidence that the hose is compatible with all system hardware that it will be connected to when in use within the gasoline dispensing system.

21.1.2 The applicant shall provide information regarding the materials specifications of all components, including evidence of compatibility with all fuels in common use in California and approved as specified in Section 4.7. If the applicant is requesting a certification for use only with specified fuel formulations, the applicant shall clearly identify, in the application, the included and excluded fuel formulations for which certification is requested.

21.1.3 The applicant shall state the expected useful life of the hose.

21.1.4 All applications shall include detailed engineering drawings of the hose and hose fittings. These drawing must provide all hose and fitting dimensions, including thicknesses of each individual hose material layer. Further, all hose, fitting and gasket materials must be identified.

21.1.5 Hose installation instructions shall be included with the application.

21.1.6 The applicant shall submit evidence of financial responsibility to ensure adequate protection to the end-user of the product as specified in Section 17.4 and to demonstrate the ability to pay for certification tests.

21.1.7 The applicant shall comply with the warranty requirements of section 17.5 and shall submit a copy of the warranty for the hose and samples of component tags.

21.1.8 All applications shall include the estimated retail price of the hose.

21.2 Hose Lengths

Once a hose of a particular construction has been certified to comply with low permeation hose standard per section 21, the Executive Officer shall specify the length of the hose as a condition of certification after considering other applicable performance standards or specifications.

21.3 Identification of Certified Hose

Certified low permeation hoses shall comply with the marking and identification requirements of section 17.7.1