Appendix 2

Proposed Amendments of Vapor Recovery Certification and Test Procedures

D-200 – "Definitions for Vapor Recovery Procedures" (Adopted April 12, 1996, as last amended ~~May 8, 2008~~ [*Insert amendment date*])

CP-201 – "Certification Procedure for Vapor Recovery Systems at Gasoline Dispensing Facilities" (Adopted December 9, 1975, as last amended ~~May 25, 2006~~ [*Insert amendment date*])

CP-206 – "Certification Procedures for Vapor Recovery Systems at Gasoline Dispensing Facilities Using Aboveground Storage Tanks" (Adopted May 2, 2008, as last amended [*Insert amendment date*])

TP-201.1 – "Volumetric Efficiency for Phase I Systems" (Adopted: April 12, 1996, as last amended ~~October 8, 2003~~ [*Insert amendment date*])

TP-201.2 – "Efficiency and Emission Factor for Phase II Systems" (Adopted: April 12, 1996, as last amended ~~May 2, 2008~~ [*Insert amendment date*])

TP-201.2A – "Determination of Vehicle Matrix for Phase II Systems" (Adopted: April 12, 1996, as last amended ~~February 1, 2001~~ [*Insert amendment date*])

TP-201.2I – "Test Procedure for In-Station Diagnostic Systems" (Adopted: October 8, 2003, as last amended ~~May 25, 2006~~ [*Insert amendment date*])

TP-201.2J – "Pressure Drop Bench Testing of Vapor Recovery Components" (Adopted: October 8, 2003, as last amended October 8, 2003 [*Insert amendment date*])

TP-201.3 – "Determination of 2 Inch WC Static Pressure Performance of Vapor Recovery Systems of Dispensing Facilities" (Adopted: April 12, 1996, as last amended ~~March 17, 1999~~ [*Insert amendment date*])

TP-206.3 – "Determination of Static Pressure Performance of Vapor Recovery Systems of at Gasoline Dispensing Facilities with Aboveground Storage Tanks" (Adopted: May 2, 2008, as last amended [*Insert amendment date*])

California Environmental Protection Agency

Air Resources Board

PROPOSED

Vapor Recovery Definitions

D-200

DEFINITIONS FOR VAPOR RECOVERY PROCEDURES

Adopted: April 12, 1996
Amended: March 17, 1999
Amended: February 1, 2001
Amended: July 3, 2002
Amended: October 8, 2003
Amended: May 25, 2006
Amended: May 2, 2008
Amended: [insert amendment date]

Note: The text is shown in ~~strikeout~~ to indicate that it is proposed for deletion and underline to indicate that it is proposed for addition. [Bracketed text] is not part of the proposed amendment.

California Environmental Protection Agency
Air Resources Board

Vapor Recovery Definitions

D-200

Definitions for
Vapor Recovery Procedures

1 APPLICABILITY

The terms and acronyms contained herein are applicable for the *Certification and Test Procedures for Vapor Recovery Systems at Gasoline Dispensing Facilities, Gasoline Bulk Plants, Gasoline Terminals, Cargo Tanks, Novel Facilities, and Aboveground Storage Tanks*. They are intended as a clarification of the terms and acronyms used throughout the Certification and Test Procedures.

2 TERMS

abbreviated operational tests
operational tests that are conducted for a duration of less than 180 days.

aboveground storage tank
a system that uses a gasoline storage tank that is intended for fixed installations, without backfill, that is located above or below grade.

airport refueller
a cargo tank which: has a total capacity no greater than 5000 gallons; exclusively transports avgas and jet fuel; and is not licensed for public highway use.

assist
a vapor recovery system, which employs a pump, blower, or other vacuum inducing devices, to collect and/or process vapors at a subject facility.

balance
a vapor recovery system which uses direct displacement to collect and/or process vapors at a subject facility.

below-grade vaulted tank
an aboveground storage tank that is below the level of the earth's surface contained in an enclosure, without backfill, and requires continuous ventilation.

blend valve
the valve in a dispenser that typically creates specific product grade by blending two other product grades in a ratio.

bootless nozzle
identifies a type of vapor recovery nozzle that does not have a bellows, or “boot,” over the length of the nozzle spout.

bulk plant
an intermediate gasoline distribution facility where delivery to and from storage tanks is by cargo tank.

cargo tank
any container, including associated pipes and fittings, that is used for the transportation of gasoline on any highway and is required to be certified in accordance with Section 41962 of the California Health and Safety Code.

certification procedures
document certified performance standards and performance specifications for vapor recovery systems, and document test procedures for determining compliance with such standards and specifications.

The purpose of such procedures is to provide certified performance standards and performance specifications for performance levels equal to or greater than those levels required by federal, state, and local statutes, rules, and regulations applicable at the time that any ARB Executive Order certifying a system is signed.

certification tests
any test conducted as part of the certification process. Certification tests include operational tests, vapor recovery equipment defect tests, challenge mode tests, and any bench testing conducted during a system or component certification.

challenge mode testing
testing to verify that the system will meet applicable standards and specifications under various GDF operating conditions.

compartment
a liquid-tight division of a cargo tank.

compliance tests
tests which, as required by an ARB Executive Order, are performed after certification to determine compliance with a certified performance standard or specification.

district

any of California's local air pollution agencies, including the air pollution control districts and air quality management districts.

effective date

the date on which a provision has the effect of state law. The effective date "starts the clock" for the period of continuing use of installed vapor recovery systems/equipment under Health and Safety Code section 41956.1. The period may be up to four years after which the component and/or system may no longer be used.

emission factor

a performance standard expressed as pounds of hydrocarbon per 1,000 gallons of gasoline dispensed.

engineering evaluation

an evaluation by the Executive Officer of the relationship that vapor recovery system and/or system component design, operation, and defects, have on the performance of the vapor recovery system. The evaluation may include, but is not limited to, an analysis based on physical science, chemistry, and engineering data from test procedures, in-use performance audits, challenge mode tests, or observations conducted by the Executive Officer or technical or other information made available to the Executive Officer.

Executive Order

a document issued by the Executive Officer that certifies a vapor recovery system.

existing installation

any gasoline dispensing facility that is not a new installation.

expired certification

any system or component certification that has reached the end of it's certification period and has not been renewed or extended by the Executive Officer.

~~**fugitive emissions**~~

~~those emissions of hydrocarbon vapors emitted from a GDF due to evaporative loss from spillage or may also include those pressure-related fugitive emissions as defined below.~~

full operational tests

operational tests where the complete complement of test procedures are conducted to demonstrate compliance with all the applicable standards and specifications in CP-201.

gastight
exhibiting no vapor leak(s).

gasoline
any petroleum distillate having a Reid vapor pressure of four pounds or greater and meeting the requirements of title 13, California Code of Regulations, division 3, chapter 5, article 1, beginning with section 2250.

gasoline dispensing facility
a gasoline dispensing facility (GDF) is a stationary source which receives gasoline from cargo tanks and/or dispenses gasoline directly into the fuel tanks of motor vehicles.

hold-open latch
a certified device which is an integral part of the dispensing nozzle and is manufactured specifically for the purpose of dispensing gasoline without requiring the consumer's physical contact with the nozzle during refueling operations.

incinerator
any assist processor designed to control hydrocarbon emissions by any kind of oxidation which generates exhaust which is so hot and variable in volume that such volume can only be determined by correlated measurements and thermodynamic principles, rather than direct measurement.

insertion interlock
any certified mechanism which is an integral part of a bellows-equipped dispensing nozzle which prohibits the dispensing of fuel unless the bellows has been compressed.

in-station diagnostics (ISD)
equipment that provides continuous real-time monitoring of critical emission-related vapor recovery system parameters and components, and alerts the station operator when a failure mode is detected so that corrective action is taken.

leak detection solution
any solution containing soap, detergent or similar materials which promote formation of bubbles, and which is used to wet joints or surfaces from which gas may be leaking, and which causes bubbles to form at the site of any escaping gas.

leak free
liquid leak of no greater than three drops per minute.

limited operational tests
operational tests where only the test procedures appropriate for a specific

component(s) are conducted to demonstrate compliance with specific standards and specifications.

liquid condensate trap (knock-out pot, thief port)
a device designed to collect liquid that condenses in the vapor return line in a manner that allows it to be evacuated and ensures that the vapor return line will not be blocked by the accumulation of liquid.

liquid leak
the dripping of liquid organic compounds at a rate in excess of three (3) drops per minute from any single leak source other than the liquid fill line and vapor line disconnect operations. For cargo tanks, a liquid leak from liquid product line and vapor line disconnect operations is defined to be:

more than two (2) milliliters liquid drainage per disconnect from a top loading operation; or

more than ten (10) milliliters liquid drainage from a bottom loading operation. Such liquid drainage for disconnect operations shall be determined by computing the average drainage from three consecutive disconnects at any one permit unit.

liquid removal device
a device designed specifically to remove liquid from the vapor return portion of a vapor hose.

liquid ~~retain~~ retention
any liquid gasoline retained in the nozzle's liquid path or the vapor passage of the nozzle/hose assembly, on the atmospheric side of the vapor check valve, that is subject to potential spillage or evaporation.

low permeation hose
a hose that is used to dispense gasoline and complies with the permeation performance standard as determined by UL 330 (seventh edition).

lower explosive limit (LEL)
the minimum volumetric fraction of combustible gas, in air, which will support the propagation of flame; commonly expressed in units of percent (%) or parts per million (ppm).

Standard references for physical properties of combustible gases differ by a few percent in their listed values for lower explosive limit (LEL) and differ also in terms employed. For clarity:

"LEL" shall mean the same as "lower limit of flammability," "lower end of the explosive range", and other related terms in common technical discourse.

The authoritative reference for determination of LEL values shall be the chapter GASEOUS FUELS, by C. C. Ward, pages 7-21 to 7-24 of *Marks' Standard Handbook for Mechanical Engineers*, Eighth Edition, McGraw Hill, New York, 1978.

The LEL for propane is 2.1% (21,000 ppm).
The LEL for methane is 5.0 % (50, 000 ppm)

major modification

the modification of an existing GDF that makes it subject to the same requirements to which a new installation is subject.

Modification of the Phase I system that involves the addition, replacement, or removal of an underground storage tank, or modification that causes the tank top to be unburied, is considered a major modification of the Phase I system.

Modification of the Phase II system that involves the addition, replacement or removal of 50 percent or more of the buried vapor piping, or the replacement of dispensers, is considered a major modification of the Phase II system. The replacement of a dispenser is not a major modification when the replacement is occasioned by end user damage to a dispenser.

Phase II system upgrades to make the systems ORVR compatible do not constitute a major modification. Phase II system upgrades to comply with the under-dispenser containment requirement (CCR, Title 23, section 2636(h)(1)) initiated before January 1, 2004 do not constitute a major modification. Modifications to dispensers may require use of unihose configurations as described in CP-201 section 4.10.

The replacement of an aboveground storage tank is a major modification. The installation of an AST after retrofitting with standing loss controls or the exchange of an AST for a standing loss control retrofitted AST of equal capacity to comply with the requirements of CP-206 is not a major modification.

mini-boot

a device used on vapor recovery nozzles to enhance collection efficiency without requiring a tight seal at the vehicle fillpipe.

multi-product dispenser (MPD)

a dispenser of multiple products with one or more hoses per dispenser side.

motor vehicle

as defined in Section 39039 of the Health and Safety Code.

National Institute of Standards and Technology

the United States Department of Commerce, National Institute of Standards and Technology (NIST) which, through its Standard Reference Materials (SRM) Program, provides science, industry, and government with a source of well-characterized materials certified for chemical composition or for some chemical or physical property. These materials are designated SRMs and are used to calibrate instruments and to evaluate analytical methods and systems, or to produce scientific data that can be referred readily to a common base.

new installation

a gasoline dispensing facility that is not constructed as of the operative date of the latest amendments to Certification Procedure CP-201 or CP-206, or a gasoline dispensing facility constructed as of the operative date of the latest amendments to Certification Procedure CP-201 or CP-206 that has undergone a major modification on or after the operative date of the amendments.

novel

a modifier which indicates a vapor recovery system (or system feature) or facility to which the written procedures (of general applicability) do not apply; for such a novel system or facility, new system-specific or facility-specific performance specifications and test procedures shall be developed and required as conditions of certification.

nozzle bellows (nozzle boot)

the flexible device around the spout of some vapor recovery nozzles, utilized to contain the vapor displaced from the vehicle.

on-board refueling vapor recovery system

vehicle based system required by title 13, California Code of Regulations, section 1978, or Part 86, Code of Federal Regulations.

operational test

testing conducted for the purpose of certification of a vapor recovery system or component where the vapor recovery equipment is installed in an operating GDF. Also see the definitions for “abbreviated”, “full”, and “limited” operational tests. The term “operational test” is intended to imply certification tests conducted on a GDF operating under normal conditions. This definition excludes vapor recovery equipment defect and bench tests conducted as part of a system certification. Challenge mode testing may be conducted during an operational test if the Executive Officer determines that such testing will not impact the operational test.

operative date

the date on which a regulated person is first required to act or is prohibited

from acting. The operative date determines when new installations and facilities undergoing major modifications must use equipment that meets the applicable performance standard and/or performance specification.

over-fill prevention device
a device designed to stop the delivery of product to a storage tank to prevent the over-filling of the tank and potential spillage.

phase I
control of vapors during the transfer of gasoline from the cargo tank to the gasoline dispensing facility.

phase II
the control of vapors during the transfer of gasoline from the gasoline dispensing facility to the vehicle and storage of gasoline at the gasoline dispensing facility.

portable fuel container
any container or vessel that is designed or used primarily for receiving, transporting, storing, and dispensing fuel.

pressure-related fugitive emissions
those emissions of hydrocarbon vapors emitted from a GDF due to a positive gauge pressure in the headspace (ullage) of the gasoline storage tank, as determined using the procedures outlined in TP-201.2F. These emissions do not include transfer emissions at the nozzle/fillpipe interface, ~~nor~~ emissions from the processor, nor the emissions from the vent pipe P/V valve, provided that the cracking pressure of the P/V valve has been exceeded.

processor
a vapor processor, either destructive or non-destructive, that operates to manage the pressure of the vapor in the gasoline storage tank within specified limits.

Reid Vapor Pressure
the absolute vapor pressure of volatile petroleum liquids, except liquefied petroleum gases, as determined in accordance with ASTM D323-89.

renewed certification
an Executive Order for vapor recovery equipment or system reviewed and approved for renewal by the Executive Officer on or before the expiration date as stated in the Executive Order.

revoked certification
an Executive Order for vapor recovery equipment or system which has been determined by the Executive Officer to not be in compliance with the applicable performance standards and specifications.

rigid piping

any piping material with a bend radius that exceeds six feet as determined by TP-201.2G.

spillage

liquid which enters the environment from a dispensing facility, except for liquid which leaves such dispensing facility in a vehicle tank or cargo tank.

The following definitions apply for the determination of spillage as defined above:

pre-dispensing spillage

spillage which occurs between:

the time when a dispensing nozzle is removed from a dispenser and

the time when the dispensing nozzle is inserted into the tank receiving the dispensed liquid

dispensing spillage

spillage which occurs between

the time when the dispensing nozzle is inserted into the tank receiving the dispensed liquid and

the time when the dispensing nozzle is withdrawn from the tank receiving the dispensed liquid

post-dispensing spillage

spillage which occurs between

the time when the dispensing nozzle is withdrawn from the tank receiving the dispensed liquid and

the time when the dispensing nozzle is returned to a dispenser.

spitback

the forcible ejection of liquid gasoline upon activation of the nozzle's primary shutoff mechanism.

spitting

liquid gasoline dispensed or released from the nozzle spout when the trigger is depressed without the dispenser being activated

static torque of phase I adaptor

the amount of torque, measured as pound-inches, required to start the rotation of a rotatable phase I adaptor as measured in accordance with TP-201.1B.

standing loss control
the control of vapors from ASTs when no Phase I or Phase II gasoline transfers are occurring.

submerged fillpipe
any fillpipe which has its discharge opening entirely submerged when the liquid level is six inches above the bottom of the tank.

when referring to a tank which is loaded from the side, any fillpipe which has its discharge opening entirely submerged when the liquid level is 18 inches above the bottom of the tank.

superseded certification
an Executive Order (EO) that has been replaced by a revised version of the Executive Order that reflects changes in the vapor recovery equipment or system.

summer fuel
fuel that is required to comply with the requirements of title 13, California Code of Regulations, section 2262.4.

temperature attenuation
a standing loss control for aboveground storage tanks that controls the effects of diurnal ambient temperature or solar radiation on fuel surface temperature.

test procedures
specify equipment and techniques for determining the performance and compliance status of vapor recovery systems relative to certified performance standards and associated certified performance specifications.

terminal
a primary distribution facility for the loading of cargo tanks that deliver gasoline to bulk plants, service stations and other distribution points; and where delivery to the facility storage tanks is by other than by cargo tank.

terminated certification
status of certification of any systems or any system components certified under performance standards in effect prior to the adoption of revised standards and installed prior to the operative date of the revised standards.

top off

the attempt to dispense gasoline to a motor vehicle or utility equipment fuel tank after the dispensing nozzle primary shutoff mechanism has engaged. The filling of a class of vehicle tanks which, because of the configuration of the fill pipe, cause premature activation of the primary shutoff, shall not be considered topping off.

transition flow

the flow rate at which a transition occurs in the slope of the plot of flow rate versus pressure for a valve tested per TP-201.2B.

ullage

the empty volume of any container. For example, the ullage of a tank designed primarily for containing liquid is the volume of the tank minus the volume of the liquid.

underground storage tank

any one or combination of tanks, including pipes connected thereto, which is used for the storage of gasoline, which is substantially or totally beneath the surface of the ground and does not have an emergency vent.

unihose dispenser

a multi-product dispenser that has only one hose and nozzle per dispenser side.

vapor guard (see mini-boot)

vapor leak

a vapor leak measured as greater than 10,000 parts per million on a methane calibrated gas detector, measured at a minimum distance of one centimeter from the source in accordance with EPA Reference Method 21, compliance with the static pressure integrity requirements as determined by TP-201.3, bagging of individual components, or the presence of bubbles using a liquid leak detector solution.

vapor recovery system

a vapor gathering system capable of collecting the hydrocarbon vapors and gases discharged and a vapor disposal system capable of processing such hydrocarbon vapors and gases so as to prevent their emission into the atmosphere, with all tank gauging and sampling devices gastight except when gauging or sampling is taking place.

vapor recovery system for gasoline dispensing facility (GDF)

all equipment used at a GDF to recover, contain, and transfer gasoline vapors generated by refueling vehicle tanks, gasoline storage tanks, and portable fuel containers, including, but not limited to, dispensing equipment,

couplers, fittings, processors, control boards, gauges, and monitors.

vent
any plumbing which conveys an air/vapor mixture from a vapor recovery system to the atmosphere.

winter fuel
fuel that is not required to comply with the regulations that are applicable to summer fuel.

3 ACRONYMS

ACF
actual cubic feet (see CF, CFH, and CFM) at sampling conditions.

APCD
one of California's Air Pollution Control Districts.

AQMD
one of California's Air Quality Management Districts.

A/L Ratio or A/L
air to liquid ratio.

ARB
Air Resources Board.

ARB Executive Officer or Executive Officer
the Executive Officer of the ARB or his or her authorized representative or designate.

AST
aboveground storage tank.

CARB
California Air Resources Board.

CCR
California Code of Regulations.

CF
cubic feet.

CFR
Code of Federal Regulations.

CT#
cargo tank number issued by the Executive Officer.

CFH
cubic feet per hour.

CFM
cubic feet per minute.

DMS
California Department of Food and Agriculture, Division of Measurement Standards.

DOSH
California Department of Industrial Relations, Division of Occupational Safety and Health.

Eng. Eval.
engineering evaluation.

EO
Executive Order.

FID
flame ionization detector.

GC/FID
gas chromatograph with flame ionization detector.

GDF
gasoline dispensing facility.

H&SC
California Health and Safety Code.

ID
inside diameter.

ID#
identification number.

ISD
In-Station Diagnostics.

LDS
leak detection solution.

LEL
lower explosive limit.

LPM
liters per minute.

mmHg
millimeters of mercury (unit of pressure).

MPD
multi-product dispenser.

N_2
nitrogen gas.

NDIR
non-dispersive infrared.

NEMA
National Electrical Manufacturers Association

NIST
National Institute of Standards and Technology.

NPT
National pipe threads

ORVR
onboard refueling vapor recovery.

PV or P/V Valve
pressure/vacuum relief vent valve.

QA/QC
quality assurance/quality control

SFM
California State Fire Marshal.

Sec.
section.

SLC
Standing Loss Control

Spec.
specification.

Std.
standard.

SWRCB
State Water Resources Control Board.

UST
underground storage tank.

VRED
vapor recovery equipment defect.

WC
water column (unit of pressure normally expressed in inches).

WC_g
water column, gauge (unit of pressure normally expressed in inches).

California Environmental Protection Agency

Air Resources Board

PROPOSED

Vapor Recovery Certification Procedure

CP - 201

Certification Procedure for Vapor Recovery Systems at Gasoline Dispensing Facilities

Adopted: December 9, 1975
Amended: March 30, 1976
Amended: August 9, 1978
Amended: December 4, 1981
Amended: September 1, 1982
Amended: April 12, 1996
Amended: April 28, 2000
Amended: February 1, 2001
Amended: June 1, 2001
Amended: July 25, 2001
Amended: July 3, 2002
Amended: March 7, 2003
Amended: July 1, 2003
Amended: October 8, 2003
Amended: August 6, 2004
Amended: February 9, 2005
Amended: May 25, 2006
Amended: [Insert Amendment Date]

Note: The text is shown in ~~strikeout~~ to indicate that it is proposed for deletion and underline to indicate that it is proposed for addition. [Bracketed text] is not part of the proposed amendment.

CP-201
TABLE OF CONTENTS

Section	Title	Page
1	GENERAL INFORMATION AND APPLICABILITY	1
1.1	Legislative and Regulatory Requirements of Other State Agencies	1
1.2	Requirement to Comply with All Other Applicable Codes and Regulations	2
2	PERFORMANCE STANDARDS AND SPECIFICATIONS	2
2.1	Performance Standards	2
2.2	Performance Specifications	2
2.3	Innovative Systems	3
2.4	Additional or Amended Performance Standards or Performance Specifications	3
3	PHASE I PERFORMANCE STANDARDS AND SPECIFICATIONS	7
3.1	Phase I Efficiency/Emission Factor	8
3.2	Static Pressure Performance	8
3.3	Phase I Drop-Tubes with Over-Fill Prevention	9
3.4	Phase I Product and Vapor Adaptors	9
3.5	Pressure Vacuum Vent Valves	10
3.6	Spill Containers	10
3.7	Connections and Fittings	11
3.8	Materials Compatibility with Fuel Blends	11
4	PHASE II PERFORMANCE STANDARDS AND SPECIFICATIONS APPLICABLE TO ALL PHASE II VAPOR RECOVERY SYSTEMS	13
4.1	Phase II Emission Factor/Efficiency	14
4.2	Static Pressure Performance	15
4.3	Spillage	16
4.4	Compatibility of Phase II Systems with Vehicles Equipped with ORVR Systems	17
4.5	Compatibility of Phase II Systems with Phase I Systems	17
4.6	Underground Storage Tank Pressure Criteria	18
4.7	Nozzle Criteria	19
4.8	Liquid Retention	19
4.9	Nozzle/Dispenser Compatibility	20
4.10	Unihose Multi-Product Dispenser (MPD) Configuration	20
4.11	Vapor Return Piping	20
4.12	Liquid Condensate Traps	21
4.13	Connections and Fittings	21
5	PHASE II PERFORMANCE STANDARDS AND SPECIFICATIONS APPLICABLE TO BALANCE VAPOR RECOVERY SYSTEMS	22
5.1	Balance Nozzle Criteria	23
5.2	Dynamic Pressure Drop Criteria for Balance Systems	23
5.3	Liquid Removal Systems	24
6	PHASE II PERFORMANCE STANDARDS AND SPECIFICATIONS APPLICABLE TO ALL ASSIST VAPOR RECOVERY SYSTEMS	24
6.1	Nozzle Criteria	24

Section	Title	Page
6.2	Air to Liquid Ratio	25
7	PHASE II PERFORMANCE STANDARDS AND SPECIFICATIONS APPLICABLE TO ASSIST SYSTEMS UTILIZING A CENTRAL VACUUM UNIT	25
7.1	Vacuum Levels Generated by the Collection Device	26
7.2	Maximum Number of Refueling Points per Vacuum Device	26
8	PHASE II PERFORMANCE STANDARDS AND SPECIFICATIONS APPLICABLE TO ASSIST SYSTEMS UTILIZING A DESTRUCTIVE OR NON-DESTRUCTIVE PROCESSOR	
8.1	Processor Emission Factor	26
8.2	Hazardous Air Pollutants from Destructive Processors	27
8.3	Maximum Hydrocarbon Feedrate to Processor	27
8.4	Typical Load on the Processor	27
8.5	Processor Operation Time	28
9	IN-STATION DIAGNOSTIC SYSTEMS	28
9.1	General Requirements	28
9.2	Monitoring Requirements	29
9.3	Records	32
9.4	Tampering Protection	33
9.5	Readiness/Function Code	33
9.6	Stored Vapor Recovery System Conditions	34
9.7	Challenge Mode Testing	34
9.8	Electronic Access	34
10	CERTIFICATION OF VAPOR RECOVERY SYSTEMS	34
11	APPLICATION PROCESS	35
11.1	Description of Vapor Recovery System	36
11.2	Description of In-Station Diagnostics	37
11.3	Compatibility	38
11.4	Reliability of the System	39
11.5	Installation, Operation and Maintenance of the System	39
11.6	Evidence of Financial Responsibility	39
11.7	Warranty	40
11.8	Test Station	40
11.9	Notification of Certified System Component Manufacturers ~~Certification Holder~~	40
11.10	Equipment Defect Identification and Test Protocols	40
11.11	Challenge Modes and Test Protocols	41
11.12	Other Information	41
12	EVALUATION OF THE APPLICATION	41
12.1	Performance Standards and Specifications	42
12.2	Bench and Operational Testing Results	42
12.3	Evaluation of System Concept	42
12.4	Materials Specifications and Compatibility with Fuel Formulations	42
12.5	Installation, Operation and Maintenance Manuals	42
12.6	Equipment Defect Identification	42

Section	Title	Page
12.7	Challenge Mode Determination	43
13	VAPOR RECOVERY SYSTEM CERTIFICATION TESTING	43
13.1	Test Site for Field Testing of Vapor Recovery Systems	44
13.2	Bench Testing of Components	45
13.3	Operational test of at Least 180 Days	46
13.4	Equipment Defect and Challenge Mode Testing	46
13.5	Efficiency and/or Emission Factor Test	46
13.6	Vehicle Matrix	47
14	ALTERNATE TEST PROCEDURES AND INSPECTION PROCEDURES	48
14.1	Alternate Test Procedures for Certification Testing	48
14.2	Request for Approval of Alternate Test Procedure	48
14.3	Response to Request	49
14.4	Testing of Alternate Test Procedures	49
14.5	Documentation of Alternate Test Procedures	49
14.6	Inspection Procedures	49
15	DOCUMENTATION OF CERTIFICATION	50
15.1	Executive Order	50
15.2	Summary of Certification Process	50
16	DURATION AND CONDITIONS OF CERTIFICATION	50
16.1	Duration of System Certification	50
16.2	One Vapor Recovery System per UST System	50
16.3	Certification Not Transferable	51
16.4	Financial Responsibility	51
16.5	Warranty	51
16.6	Installation, Operation and Maintenance of the System	52
16.7	Identification of System Components	52
16.8	Revocation of Certification	53
17	CERTIFICATION RENEWAL	53
17.1	Request for Renewal	53
17.2	Review Request	54
17.3	Evaluation of System Deficiencies	54
17.4	Letter of Intent	54
17.5	Renewal of Executive Order	55
17.6	Denial of Executive Order Renewal	56
18	AMENDMENTS TO EXECUTIVE ORDERS	56
18.1	Request for Amendment	56
18.2	Review of Request	56
18.3	Testing	58
18.4	Letter of Intent	58
18.5	Issuance of Executive Order	58
19	REPLACEMENT OF COMPONENTS OR PARTS OF A SYSTEM WITH A TERMINATED, REVOKED, SUPERSEDED OR EXPIRED CERTIFICATION	59

Section	Title	Page
19.1	Component and Replacement Parts…….	59
19.2	Components or Replacement Part Not Meeting Specifications……	59
19.3	Components or Part Not Certified with System and Not Meeting Specifications…	59
19.4	Procedure for Approval of Replacement Part……	59
20	REQUIREMENTS FOR, AND CERTIFICATION OF, LOW PERMEATION HOSES…..	60
20.1	Request for Certification……..	60
20.2	Hose Lengths…….	61
20.3	Identification of Certified se……	61

LIST OF TABLES

Table	Title	Page
2-1	Effective and Operative Dates for Phase I and Phase II Vapor Recovery Performance Standards and Specifications	5
3-1	Phase I Performance Standards and Specifications Applicable to All Phase I Vapor Recovery Systems	7
4-1	Phase II Performance Standards and Specifications Applicable to All Phase II Vapor Recovery Systems	13
5-1	Phase II Performance Standards and Specifications Applicable to Phase II Balance Vapor Recovery Systems	22
6-1	Phase II Performance Standards and Specifications Applicable to All Phase II Vacuum Assist Systems	24
7-1	Phase II Performance Standards and Specifications Applicable to All Phase II Assist Systems Utilizing a Central Vacuum Unit	25
8-1	Phase II Performance Standards and Specifications Applicable to All Phase II Assist Systems Utilizing a Destructive Processor	26
8-2	Phase II Performance Standards and Specifications Applicable to All Phase II Assist Systems Utilizing a Non-Destructive Processor	27
11-1	Estimated Timeline For the Certification Application Process	36
17-1	Estimated Timeline for the Renewal Process	56

LIST OF FIGURES

Figure	Title	Page
3A	Phase I Product Adaptor Cam and Groove Standard	12
3B	Phase I Vapor Recovery Adaptor Cam and Groove Standard	12

California Environmental Protection Agency
Air Resources Board

Vapor Recovery Certification Procedure

CP-201

Certification Procedure for Vapor Recovery Systems at Gasoline Dispensing Facilities

A set of definitions common to all Certification and Test Procedures are in:

D-200 Definitions for Vapor Recovery Procedures

For the purpose of this procedure, the term "ARB or CARB" refers to the California Air Resources Board, and the term "Executive Officer" refers to the ARB Executive Officer, or his or her authorized representative or designate.

1. GENERAL INFORMATION AND APPLICABILITY

This document describes the procedure for evaluating and certifying Phase I and Phase II vapor recovery systems, and components, used at Gasoline Dispensing Facilities (GDF) with underground storage tanks. An ARB Executive Order certifying the system shall be issued only after all of the applicable certification requirements have been successfully completed.

This Certification Procedure, CP-201, is adopted pursuant to Section 41954 of the California Health and Safety Code (CH&SC) and is applicable to vapor recovery systems installed at gasoline dispensing facilities for controlling gasoline vapors emitted during the fueling of storage tanks (Phase I) and the refueling of vehicle fuel tanks (Phase II). Vapor recovery systems are complete systems and shall include all associated dispensers, piping, nozzles, couplers, processing units, underground tanks and any other equipment or components necessary for the control of gasoline vapors during Phase I or Phase II refueling operations at GDF.

1.1 Legislative and Regulatory Requirements of Other State Agencies

As required pursuant to Sections 25290.1.2, 41955 and 41957 of the CH&SC, the Executive Officer shall coordinate this certification procedure with:

1.1.1 Department of Food and Agriculture,
Division of Measurement Standards (DMS)

1.1.2 Department of Forestry and Fire Protection,
Office of the State Fire Marshall (SFM)

1.1.3 Department of Industrial Relations,
Division of Occupational Safety and Health (DOSH)

1.1.4 State Water Resources Control Board (SWRCB)
Division of Water Quality

Prior to certification of the vapor recovery system by the Executive Officer, the applicant shall submit plans and specifications for the system to each of these agencies. Certification testing by these agencies may be conducted concurrently with ARB certification testing; however, the approval of the SFM, DMS, DOSH, and a determination by the SWRCB shall be a precondition to certification by ARB. The applicant is responsible for providing documentation of these approvals and determinations to ARB.

1.2 Requirement to Comply with All Other Applicable Codes and Regulations

Certification of a system by the Executive Officer does not exempt the system from compliance with other applicable codes and regulations such as state fire codes, weights and measures regulations, and safety codes and regulations.

2. PERFORMANCE STANDARDS AND SPECIFICATIONS

2.1 Performance Standards

A performance standard defines the minimum performance requirements for certification of any system, including associated components. An applicant may request certification to a performance standard that is more stringent than the minimum performance standard specified in CP-201. Ongoing compliance with all applicable performance standards, including any more stringent standards requested by the applicant, shall be demonstrated throughout certification testing.

2.2 Performance Specifications

A performance specification is an engineering requirement that relates to the proper operation of a specific system or component thereof. In addition to the performance specifications mandated in CP-201, an applicant may specify additional performance specifications for a system or component. An applicant may request certification to a performance specification that is more stringent than the minimum performance specification in CP-201. Ongoing compliance with all applicable performance specifications, including any more stringent specifications requested by the applicant, shall be demonstrated throughout certification testing.

2.3 Innovative System

The innovative system concept provides flexibility in the design of vapor recovery systems. A vapor recovery system that fails to comply with an identified performance standard or specification may qualify for consideration as an innovative system, provided that the system meets the primary emission factor/efficiency, complies with all other applicable requirements of certification, and the Executive Officer determines that the emission benefits of the innovation are greater than the consequences of failing to meet the identified standard or specification.

2.4 Additional or Amended Performance Standards or Performance Specifications

Whenever these Certification Procedures are amended to include additional or amended performance standards, any system that is certified as of the effective date of additional or amended standards shall remain certified until the operative date. Systems installed before the operative date of additional or amended standards may remain in use for the remainder of their useful life or for up to four years after the effective date of the new standard, whichever is shorter, provided the requirements of section 19 are met.

Whenever these Certification Procedures are amended to include additional or amended performance specifications, a system shall remain certified until the Executive Order expiration date. A system that was installed before the operative date of additional or amended performance specifications may remain in use subject to the requirements of section 17.

2.4.1 The effective and operative dates of adoption for all performance standards and specifications contained herein are specified in Table 2-1.

2.4.2 The operative dates of performance standards shall be the effective date of adoption of amended or additional performance standards, except as otherwise specified in Table 2-1. Certifications shall terminate on the operative date of amended or additional performance standards unless the Executive Officer determines that the system meets the amended or additional performance standards. Upon the operative date of amended or additional performance standards, only systems complying with the amended or additional performance standards may be installed.

2.4.3 The operative dates of performance specifications are listed in Table 2-1. As of the operative date of amended or additional performance specifications, only systems complying with the amended or additional performance-specifications may be installed.

2.4.4 When the Executive Officer determines that no Phase I or Phase II system has been certified or will not be commercially available by the operative dates specified in Table 2-1 of CP-201, the Executive Officer shall extend the operative date and may extend the effective date of amended or additional performance standards or specifications. If there is only one certified system to meet amended or additional standards, that system is considered to be

commercially available if that system can be shipped within eight weeks of the receipt of an order by the equipment manufacturer.

2.4.5 **Any performance standard or specification with an effective date of January 1, 2012 or later shall become effective on the date when the first system is certified to meet the performance standard or specification. The Executive Officer shall maintain, and make available to the public, a current list of effective and operative dates for all standards and specifications.**

2.4.~~5~~**6** The Executive Officer may determine that a system certified prior to the operative date meets the amended or additional performance standards or specifications. In determining whether a previously certified system conforms with any additional or amended performance standards, specifications or other requirements adopted subsequent to certification of the system, the Executive Officer may consider any appropriate information, including data obtained in the previous certification testing of the system in lieu of new testing.

2.4.~~6~~**7** Gasoline Dispensing Facilities in districts that ARB determines are in attainment with the state standard for Ozone are exempted from the Enhanced Vapor Recovery performance standards and specifications set forth in sections 3 through 9, inclusive, with the exception of the requirement for compatibility with vehicles that are equipped with Onboard Refueling Vapor Recovery (ORVR) systems as specified in subsection 4.4. New GDFs, and those undergoing major modifications, are not exempt. If exempt facilities become subject to additional standards due to a subsequent reclassification of their district from attainment to non-attainment, the facilities will have four years to comply.

2.4.~~7~~**8** The gasoline dispensing facility's gasoline throughput for calendar year 2003 shall be used for determining compliance with the Onboard Refueling Vapor Recovery (ORVR) requirements in Table 2-1.

2.4.9 Any person can petition the Executive Officer for an engineering evaluation to determine whether the first system certified to meet a standard or specification cannot be installed and/or operated, or is otherwise incompatible with a specific type or subgroup of GDF. The petitioner shall submit the following information to the Executive Officer:

- **a) The Executive Order and specific EVR component(s) that is claimed to be incompatible,**
- **b) The specific type or subgroup of GDF that is claimed to be incompatible with the specified EVR component(s),**
- **c) A detailed technical explanation of the claimed incompatibility, supported by test data if applicable,**
- **d) An estimate of how many GDFs in California are subject to the claimed incompatibility,**
- **e) An estimate of the cost to modify a typical GDF of the affected type or subgroup so that it would no longer be subject to the claimed incompatibility.**

f) Any other information that the Executive Officer deems reasonable and necessary in conducting the engineering evaluation.

The Executive Officer shall conduct an engineering evaluation and if incompatibility is found, the Executive Officer shall issue an executive order stating the incompatibility between the certified system and the GDF type or subgroup which was the subject of the evaluation. In this event, such GDF type or subgroup is not subject to the standard or specification until such date when the first system is certified that is compatible with that GDF type or subgroup. This provision applies to any standard or specification with an effective date on or after January 1, 2012.

Table 2-1
Effective and Operative Dates for Phase I and Phase II Vapor Recovery Performance Standards and Specifications

Performance Type	Requirement	Sec.	Effective Date	Operative Date
P/V Vent Valve	As specified in Table 3-1	3.5	Not applicable	July 1, 2007
All other Phase I Standards and Specifications	As specified in Table 3-1	3	April 1, 2001	July 1, 2001
ORVR Compatibility for GDF > 2.0 million gal/yr throughput[1]	As specified in section 2.4.7 and section 4.4	4.4	September 1, 2001	April 1, 2003
ORVR Compatibility for GDF ≥ 1.0 million gal/yr throughput[1]	As specified in section 2.4.7 and section 4.4	4.4	January 1, 2002	April 1, 2003
ORVR Compatibility for GDF < 1.0 million gal/yr throughput[1]	As specified in section 2.4.7 and section 4.4	4.4	March 1, 2002	April 1, 2003
Nozzle Criteria	Post-Refueling Drips ≤ 3 drop/refueling	4.7	April 1, 2005	April 1, 2005
Liquid Retention	≤ 350 ml/1,000 gals.	4.8	April 1, 2001	July 1, 2001
Liquid Retention Nozzle Spitting	≤ 100 ml/1,000 gals. ≤ 1.0 ml /nozzle/fueling	4.8	April 1, 2005	April 1, 2005
Spillage (including	≤ 0.24 pounds/1,000 gallons	4.3	April 1, 2005	April 1, 2005

[1] Effective January 1, 2001, state law requires the certification of only those systems that are ORVR compatible (Health and Safety Code section 41954, as amended by Chapter 729, Statutes of 2000; Senate Bill 1300).

Performance Type	Requirement	Sec.	Effective Date	Operative Date
drips from spout)				
For GDF > 1.8 mil. gal/yr.	ISD Requirements	9	September 1, 2005	September 1, 2005
For GDF > 600,000 gal/yr.[2]	ISD Requirements	9.1	September 1, 2006	September 1, 2006
Unihose	One Hose/Nozzle per Dispenser Side	4.10	Not applicable	April 1, 2003
All other Phase II Standards and Specifications	As specified in Tables 4-1 through 8-2.	4,5, 6,7,8	April 1, 2005	April 1, 2005
Low Permeation Hoses	**Permeation rate ≤ 10.0 g/m^2/day as determined by UL 330**	**20.1**	**Date when the first applicable low permeation hose is certified**	**Same as the effective date**

[2] GDF ≤ 600,000 gal/yr are exempted from ISD requirements.

3. PHASE I PERFORMANCE STANDARDS AND SPECIFICATIONS

Table 3-1 summarizes the Phase I Performance Standards and Specifications applicable to all Phase I vapor recovery systems.

Table 3-1
Phase I Performance Standards and Specifications
APPLICABLE TO ALL PHASE I VAPOR RECOVERY SYSTEMS

Performance Type	Requirement	Sec.	Std. Spec.	Test Procedure
Phase I Efficiency	≥ 98.0%	3.1	Std.	TP-201.1 TP-201.1A
Phase I Emission Factor	HC ≤ 0.15 pounds/1,000 gallons	3.1	Std.	TP-201.1A
Static Pressure Performance	In accordance with section 3.2	3.2	Std.	TP-201.3
Pressure Integrity of Drop-Tube with Overfill Prevention	≤ 0.17 CFH at 2.0 inches H_2O	3.3	Spec.	TP-201.1D
Phase I Product and Vapor Adaptor/Delivery Elbow Connections	Rotatable 360°, or equivalent	3.4	Spec.	TP-201.1B and Eng. Eval.
Phase I Product Adaptor Cam and Groove	As shown in Figure 3A	3.4	Spec.	Micrometer
Phase I Vapor Recovery Adaptor Cam and Groove	CID A-A-59326 (As shown in Figure 3B)	3.4	Spec.	Micrometer
Phase I Vapor Adaptor	Poppetted	3.4	Spec.	Testing and Eng. Eval.
Phase I Vapor Adaptor	No Indication of Leaks Using Liquid Leak Detection Solution (LDS) or Bagging	3.4	Spec.	LDS or Bagging
Phase I Product and Vapor Adaptors	≤ 108 pound-inch (9 pound-foot) Static Torque	3.4	Spec.	TP-201.1B

Table 3-1 (continued)
Phase I Performance Standards and Specifications
APPLICABLE TO ALL PHASE I VAPOR RECOVERY SYSTEMS

Performance Type	Requirement	Sec.	Std. Spec.	Test Procedure
UST Vent Pipe Pressure/Vacuum Valves	Pressure Settings 2.5 to 6.0 inches H_2O Positive Pressure 6.0 to 10.0 inches H_2O Negative Pressure Leakrate at +2.0 inches $H_2O \leq 0.17$ CFH Leakrate at -4.0 inches $H_2O \leq 0.63$ CFH	3.5	Spec.	TP-201.1E CERT
Spill Container Drain Valves	Leakrate $\leq$ 0.17 CFH at +2.0 inches H_2O	3.6	Spec.	TP-201.2B TP-201.1C TP-201.1D
Vapor Connectors and Fittings	No Indication of Leaks Using Liquid Leak Detection Solution (LDS) or Bagging	3.7	Spec.	LDS or Bagging
Compatibility with Fuel Blends	Materials shall be compatible with approved fuel blends	3.8	Spec.	Testing and Eng. Eval.

3.1 Phase I Efficiency/Emission Factor

3.1.1 The minimum volumetric efficiency of Phase I systems shall be 98.0%. This shall be determined in accordance with TP-201.1 (Volumetric Efficiency of Phase I Systems at Dispensing Facilities).

3.1.2 The hydrocarbon emission factor for systems with processors shall not exceed 0.15 pounds per 1,000 gallons dispensed. This shall be determined in accordance with TP-201.1A (Emission Factor for Phase I Systems at Dispensing Facilities).

3.2 Static Pressure Performance

The static pressure performance of Phase I vapor recovery systems not associated with Phase II systems shall be determined in accordance with TP-201.3 (Determination of 2 Inch WC Static Pressure Performance of Vapor Recovery Systems of Dispensing Facilities).

3.2.1 All Phase I systems shall be capable of meeting the performance standard in accordance with Equation 3-1.

3.2.2 The minimum allowable five-minute final pressure, with an initial pressure of

two (2.00) inches H_2O, shall be calculated as follows:

[Equation 3-1]

$$P_f = 2e^{\frac{-500.887}{V}}$$

Where:

P_f	=	The minimum allowable five-minute final pressure, inches H_2O
V	=	The total ullage affected by the test, gallons
e	=	A dimensionless constant approximately equal to 2.718
2	=	The initial starting pressure, inches H_2O

3.3 Phase I Drop-Tubes with Over-Fill Prevention Devices

Phase I drop-tube over-fill prevention devices shall have a leak rate not to exceed 0.17 cubic feet per hour (~~0.17~~ CFH) at a pressure of two inches water column (2.0" H_2O). The leak rate shall be determined in accordance with TP-201.1D (Leak Rate of Drop Tube Overfill Prevention Devices and Spill Container Drain Valves). Drop-tubes that do not have an over-fill prevention device shall not leak.

3.4 Phase I Vapor Recovery and Product Adaptors

3.4.1 The vapor recovery and product adaptors shall not leak. The vapor recovery and product adaptors, and the method of connection with the delivery elbow, shall be designed so as to prevent the over-tightening or loosening of fittings during normal delivery operations. This may be accomplished by installing a swivel connection on either the storage tank (rotatable adaptor) or delivery elbow side of the equipment, or by anchoring the product and vapor adaptors in such a way that they are not rotated during deliveries, provided the anchoring mechanism does not contribute undue stress to other tank connections. If a delivery elbow with a swivel connection is the preferred method, only cargo tank trucks with those elbows shall deliver to the facility. The adaptors at such a facility shall be incompatible with a delivery elbow that does not have a swivel.

3.4.2 Phase I product adaptors shall be manufactured in accordance with the cam and groove specification as shown in Figure 3A. Phase I vapor recovery adaptors shall be manufactured in accordance with the cam and groove specification as specified in the Commercial Item Description CID A-A-59326 (shown in Figure 3B). These specifications shall be applicable only to new adaptors and shall not be applied to in-use adaptors.

3.4.3 Phase I vapor recovery adaptors shall have a poppet. The poppet shall not leak when closed. The absence of vapor leaks may be verified by the use of commercial liquid leak detection solution, or by bagging, when the vapor containment space of the underground storage tank is subjected to a non-zero gauge pressure. (Note: leak detection solution will detect leaks only when

positive gauge pressure exists.)

3.4.4 The static torque of product and vapor recovery adaptors shall not exceed 108 pound-inch (9 pound-foot) when measured in accordance with TP-201.1B.

3.5 Pressure/Vacuum Vent Valves

The Executive Officer shall certify only those vapor recovery systems equipped with a pressure/vacuum (P/V) valve(s) on the underground storage tank vent pipe(s). Verification of the P/V valve requirements set forth below shall be determined by TP-201.1E CERT, (Leak Rate and Cracking Pressure of Pressure/Vacuum Vent Valves).

3.5.1 The pressure specifications for P/V valves shall be:

Positive pressure setting of 2.5 to 6.0 inches H_2O.
Negative pressure setting of 6.0 to 10.0 inches H_2O.

3.5.2 The total leak rates for P/V valves, shall be less than or equal to:

0.17 CFH at +2.0 inches H_2O.
0.63 CFH at -4.0 inches H_2O.

3.5.3 The total leakrate of all P/V valves certified for use with any vapor recovery system shall not exceed 0.17 CFH at 2.0 inches H_2O or 0.63 CFH at -4.0 inches H_2O. Applicants may request to certify a system for use with multiple P/V valves by choosing P/V valves certified to more restrictive leak rate performance specifications. The applicant shall state in the certification application the leak rates to which P/V valves are to be certified. All individual valves shall be tested and certified to those stated leak rate specifications.

3.5.4 Phase I Certification test sites shall be configured with a minimum of three P/V valves (i.e., for representativeness), each P/V valve to be configured with an associated ball valve.

3.6 Spill Containers

3.6.1 Phase I spill container drain valves shall not exceed a leak rate of 0.17 CFH at 2.0 inches H_2O. Spill containers with cover-actuated drain valves shall be tested both with the lid installed and with the lid removed. The leak rate shall be determined in accordance with TP-201.2B (Pressure Integrity of Vapor Recovery Equipment). Phase I configurations installed so that liquid drained through the drain valve drains directly into the drop tube rather than the UST ullage shall be tested in accordance with TP-201.1C (Leak Rate of Drop Tube/Drain Valve Assembly) or TP-201.1D (Leak Rate of Drop Tube Overfill Prevention Device and Spill Container Drain Valves), whichever is applicable.

3.6.2 Drain valves shall not be allowed in spill containers used exclusively for Phase I vapor connections unless required by other applicable regulations.

3.6.3 Spill Containers shall be maintained in accordance with all applicable requirements.

3.7 Vapor Connections and Fittings

All vapor connections and fittings not specifically certified with an allowable leakrate shall not leak. The absence of vapor leaks may be verified by the use of commercial liquid leak detection solution, or by bagging individual components, when the vapor containment space of the underground storage tank is subjected to a non-zero gauge pressure. (Note: leak detection solution will detect leaks only when positive gauge pressure exists.) The absence of liquid leaks may be verified by visual inspection for seepage or drips.

3.8 Materials Compatibility with Fuel Blends

Vapor recovery systems and components shall be compatible with any and all fuel blends in common use in California, including seasonal changes, and approved for use as specified in title 13, CCR, section 2260 et seq. Applicants for certification may request limited certification for use with only specified fuel blends. Such fuel-specific certifications shall clearly specify the limits and restrictions of the certification.

Figure 3A
Phase I Product Adaptor Cam and Groove Specification

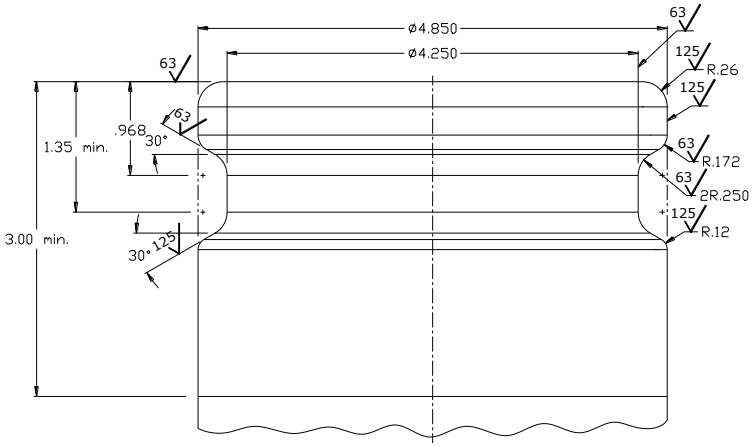

UNLESS OTHERWISE SPECIFIED
DIMENSIONS ARE IN INCHES
TOLERANCES ON DECIMALS
.XXX ± .005
.XX ± .01
ANGLES ± 0.5°

Figure 3B
Phase I Vapor Recovery Adaptor Cam and Groove Specification

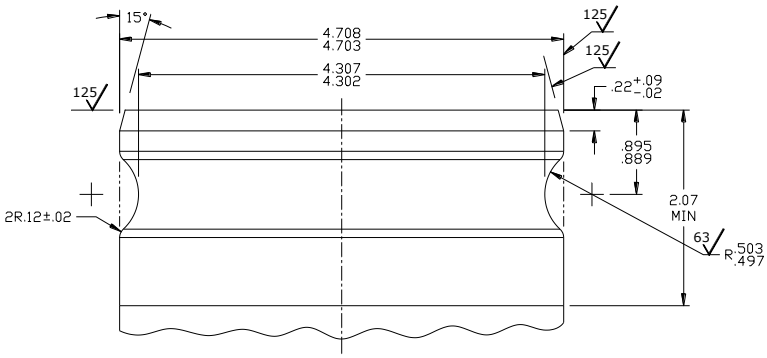

UNLESS OTHERWISE SPECIFIED
DIMENSIONS ARE IN INCHES
TOLERANCES ON DECIMALS
.XXX ± .005
.XX ± .02
ANGLES ± 0.5°

BASED ON
COMMERCIAL ITEM DESCRIPTION
CID A-A-59326
COUPLING HALF, MALE

4. PHASE II PERFORMANCE STANDARDS AND SPECIFICATIONS APPLICABLE TO ALL PHASE II VAPOR RECOVERY SYSTEMS

Table 4-1 summarizes the Phase II Performance Standards and Specifications applicable to all Phase II vapor recovery systems. Phase II vapor recovery systems shall be certified only in facilities equipped with a certified Phase I system.

Table 4-1
Phase II Performance Standards and Specifications
APPLICABLE TO ALL PHASE II VAPOR RECOVERY SYSTEMS

Performance Type	Requirement	Sec.	Std Spec.	Test Procedure
Phase II Emission Factor Includes: Refueling and Vent Emissions Pressure-Related Fugitives	Summer Fuel: 95% Efficiency and HC ≤ 0.38 pounds/1,000 gallons Winter Fuel: 95% Efficiency or HC ≤ 0.38 pounds/1,000 gallons	4.1	Std.	TP-201.2 TP-201.2A TP-201.2F
Static Pressure Performance	In accordance with Section 4.2	4.2	Std.	TP-201.3
Spillage Including Drips from Spout	≤ 0.24 pounds/1,000 gallons	4.3	Std.	TP-201.2C
ORVR Compatibility	~~Interaction when Refueling ORVR Vehicles Shall Meet the applicable Efficiency or Emission Standard, Including ORVR Penetrations to 80%~~ Applicant shall develop a test procedure to demonstrate ORVR compatibility when requested by the Executive Officer.	~~4.1~~ 4.4	Std.	Approved Test Procedure Developed by Mfg.
Liquid Retention Nozzle "Spitting"	≤ 100 ml/1,000 gallons ≤ 1.0 ml per nozzle per test	4.8	Std.	TP-201.2E
ISD	See Section 9	9	Std.	TP-201.2I
Low Permeation Hoses	Permeation Rate ≤ 10.0 g/m^2/day as Determined by UL 330	20	Std.	UL 330 (7th ed)
Phase II Compatibility with Phase I Systems	See Section 4.5	4.5	Spec.	Testing and Eng. Eval.
UST Pressure Criteria (30 day rolling average)	Daily Average Pressure ≤ +0.25 in. H_2O Daily High Pressure ≤ +1.50 in. H_2O	4.6	Spec.	TP-201.7
Nozzle Criteria Each Phase II Nozzle Shall:	Post-Refueling Drips ≤ 3 Drops/Refueling Comply with dimensions specified in section 4.7.3.~~Have an OD ≤ 0.840 inches for 2.5 inches~~ Be capable of fueling any vehicle that can be fueled with a conventional nozzle	4.7	Spec.	TP-201.2D Engineering Evaluation

Table 4-1 (continued)
Phase II Performance Standards and Specifications
APPLICABLE TO ALL PHASE II VAPOR RECOVERY SYSTEMS

Performance Type	Requirement	Sec.	Std Spec.	Test Procedure
Nozzle/Dispenser Compatibility	Vapor Check Valve Closed When Hung Hold-open Latch Disengaged When Hung	4.9	Spec.	Testing and Eng. Eval.
Unihose MPD Configuration	One Hose/Nozzle per Dispenser Side	4.10	Spec.	Testing and Eng. Eval.
Phase II Vapor Riser	Minimum 1 Inch Nominal ID	4.11	Spec.	Testing and Eng. Eval.
Vapor Return Piping	No Liquid or Fixed Blockage Minimum 3 Inch Nominal ID after First Manifold Recommended Slope ¼ Inch Per Foot Minimum Slope 1/8 Inch Per Foot	4.11	Spec.	Testing and Eng. Eval.
Vapor Return Piping Rigidity	Rigid Piping, or Equivalent Bend Radius Exceeds 6 feet	4.11	Spec.	TP-201.2G
Vapor Return Pipe Runs	~~The~~ Maximum Allowable Lengths of Pipe Runs Shall Be Established During the Certification Process	4.11	Spec.	Testing and Eng. Eval.
Liquid Condensate Traps	Shall have Automatic Evacuation System	4.12	Spec.	Testing and Eng. Eval.
Connectors and Fittings	No Indication of Vapor Leaks with Liquid Leak Detection Solution (LDS) or Bagging	4.13	Spec.	LDS or Bagging

4.1 Phase II Emission Factor/Efficiency

4.1.1 The Hydrocarbon emission factor and/or efficiency for Phase II vapor recovery systems shall be determined as follows:

When testing conducted with gasoline meeting the requirements for summer fuel:
95% Efficiency and
Hydrocarbon emission factor not to exceed 0.38 pounds/1,000 gallons.

When testing conducted with gasoline meeting the requirements for winter fuel:
95% Efficiency or
Hydrocarbon emission factor not to exceed 0.38 pounds/1,000 gallons.

Compliance with the ~~The~~ emission factor **and the efficiency standards** shall **be** demonstrate**d** ~~compliance with the standard~~ when calculated for **a test population consisting of 100 non-ORVR vehicles, selected according to TP-201.2A.** ~~each of these test populations:~~

~~The entire population of 200 vehicles as defined in TP-201.2A~~
~~The vehicles defined as "ORVR vehicles" and~~
~~The vehicles defined as "non-ORVR vehicles."~~

~~The efficiency shall demonstrate compliance with the standard when calculated for the vehicles identified as "non-ORVR."~~

4.1.2 The emission factor and/or efficiency shall be determined in accordance with TP-201.2 (Efficiency and Emission Factor for Phase II Systems) and shall include all refueling emissions, underground storage tank vent emissions and pressure-related fugitive emissions. Pressure-related fugitive emissions shall be determined in accordance with TP-201.2F (Pressure-Related Fugitive Emissions). Phase II systems that have underground storage tank (UST) pressures sufficient to cause potential fugitive emissions that exceed fifty percent (50%) of the maximum allowable emission factor shall not be certified.

4.2 Static Pressure Performance

The static pressure performance of Phase II systems, including the associated Phase I system, shall be determined in accordance with TP-201.3 (Determination of 2 Inch WC Static Pressure Performance of Vapor Recovery Systems of Dispensing Facilities).

4.2.1 All Phase II vapor recovery systems shall be capable of meeting the performance standard in accordance with Equation 4-1 or 4-2.

4.2.2 For Phase II Balance Systems, the minimum allowable five-minute final pressure, with an initial pressure of two (2.0) inches H_2O, shall be calculated as follows:

[Equation 4-1]

$$P_f = 2e^{\frac{-760.490}{V}} \quad \text{if N = 1-6}$$

$$P_f = 2e^{\frac{-792.196}{V}} \quad \text{if N = 7-12}$$

$$P_f = 2e^{\frac{-824.023}{V}} \quad \text{if N = 13-18}$$

$$P_f = 2e^{\frac{-855.974}{V}} \quad \text{if N = 19-24}$$

$$P_f = 2e^{\frac{-888.047}{V}} \quad \text{if N > 24}$$

Where:

N = The number of affected nozzles. For manifolded systems, N equals the total number of nozzles. For dedicated plumbing configurations, N equals the number of nozzles serviced by the tank being tested.

P_f = The minimum allowable five-minute final pressure, inches H_2O

V = The total ullage affected by the test, gallons

e = A dimensionless constant approximately equal to 2.718

2 = The initial starting pressure, inches H_2O

4.2.3 For Phase II Vacuum Assist Systems, the minimum allowable five-minute final pressure, with an initial pressure of two (2.0) inches H_2O, shall be calculated as follows:

[Equation 4-2]

$$P_f = 2e^{\frac{-500.887}{V}} \quad \text{if N = 1-6}$$

$$P_f = 2e^{\frac{-531.614}{V}} \quad \text{if N = 7-12}$$

$$P_f = 2e^{\frac{-562.455}{V}} \quad \text{if N = 13-18}$$

$$P_f = 2e^{\frac{-593.412}{V}} \quad \text{if N = 19-24}$$

$$P_f = 2e^{\frac{-624.483}{V}} \quad \text{if N > 24}$$

Where:

N = The number of affected nozzles. For manifolded systems, N equals the total number of nozzles. For dedicated plumbing configurations, N equals the number of nozzles serviced by the tank being tested.

P_f = The minimum allowable five-minute final pressure, inches H_2O

V = The total ullage affected by the test, gallons

e = A dimensionless constant approximately equal to 2.718

2 = The initial starting pressure, inches H_2O

4.2.4 Under no circumstances shall Phase II components be partially or completely immersed in water to check for pressure integrity.

4.3 Spillage

The Executive Officer shall not certify vapor recovery systems that cause excessive spillage.

4.3.1 Spillage shall be determined in accordance with TP-201.2C (Spillage from Phase II Systems). The emission factor for spillage shall not exceed 0.24 pounds/1000 gallons dispensed, for each of the following three categories:

All refueling events;

Refueling operations terminated before activation of the primary shutoff; and
Refueling events terminated by activation of the primary shutoff.

4.3.2 The number of self-service refueling operations observed during certification testing of any system for spillage shall be not less than:

1,000 refueling operations [not including topoffs]; and
400 fill-ups [terminated by full tank shut-off, not including topoffs].

4.3.3 Increased spillage resulting from one top-off following the first activation of the automatic (primary) shutoff mechanism shall be subjected to challenge mode testing. Nozzles that result in excessive spillage following one top off shall not be certified.

4.4 Compatibility of Phase II Systems with Vehicles Equipped with ORVR Systems

~~4.4.1 When refueling vehicles equipped with onboard refueling vapor recovery (ORVR), the Phase II system shall meet the criteria as specified in section 4.1.~~

~~4.4.2 Compatibility shall be demonstrated for typical and worst case situations and vehicle populations, up to and including 80% ORVR-equipped vehicles. Actual vehicles shall be used whenever feasible. Simulations may be proposed for specific demonstrations. Any ORVR simulation protocols shall be approved by the Executive Officer prior to conducting the test.~~

~~4.4.3~~ The applicant, when requested by the Executive Officer, ~~system manufacturer~~ shall develop ~~be responsible for developing~~ a test procedure by which ORVR compatibility can be demonstrated. This procedure is subject to an engineering evaluation by the Executive Officer.~~; if it is deemed inadequate and/or unusable, the certification application shall be deemed unacceptable.~~

4.5 Compatibility of Phase II Systems with Phase I Systems

4.5.1 Phase II vapor recovery systems shall be certified only in facilities equipped with a certified Phase I system. During a Phase II system certification, the associated Phase I system shall be subject to all of the standards and specifications in Section 3, and tested pursuant to Section 13.

Compatibility of the proposed Phase II system with the certified Phase I system installed at the certification test site shall be determined by use of all data collected as part of the monitoring described in Section 13 as well as an evaluation of the UST pressure profiles generated during the certification tests. Failure of any Phase I system tests conducted during the Phase II system certification shall require an explanation from the applicant and a determination by ARB in regard to the possible cause of the failure. Phase I system test failures shall not trigger termination of the Phase II system certification unless sufficient information demonstrates that the Phase II system caused the failure(s).

Repeated component test failures may lead to a determination of incompatibility during the 180-day operational test.

After successfully completing the certification, the Phase II system shall be evaluated based on engineering evaluation of pressure profiles to determine compatibility with other certified Phase I systems. Unless otherwise specified by the applicant, compatibility with all other certified Phase I systems shall be evaluated by ARB**.**

4.5.2 Applicants for certification may, as a performance specification, limit the type of equipment with which their system is compatible. Any such specification shall become a condition of certification.

4.6 Underground Storage Tank Pressure Criteria

Phase II systems that have underground storage tank (UST) pressures sufficient to cause potential fugitive emissions that exceed fifty percent (50%) of the maximum allowable emission factor shall not be certified. In addition, the following criteria shall apply to all Phase II systems.

4.6.1 The vapor recovery system pressure data shall be evaluated so that periods during which system pressure changes directly attributable to Phase I equipment or operations that do not comply with Sections 4.1.2 and/or 4.1.3 of CP-204 are not used to determine failure of the Phase II system to meet the system pressure criteria.

4.6.2 If the vapor recovery system pressure does not deviate from atmospheric pressure except for those excursions attributable to Phase I operations, the integrity of the vapor recovery system shall be presumed to be inadequate.

4.6.3 The daily average pressure shall be computed as follows:

Zero and negative pressure shall be computed as zero pressure; and
Time at positive and zero pressures shall be included in the calculation.
(Example: 6 hours at +1.0 inches H_2O and 18 hours at -1.0inches H_2O yields an average daily pressure of 0.25 inches H_2O.)

4.6.4 The daily high pressure shall be computed as follows:

Zero and negative pressure shall be computed as zero pressure;
Time at positive and zero pressures shall be included in the calculation;
The average positive pressure for each hour shall be calculated; and
The highest hour is the daily high pressure for the day.

4.6.5 A rolling 30 day average of the daily average pressures and the daily high pressures for each day shall be calculated by averaging the most current daily value with the appropriate values for the previous 29 days. These 30-day rolling averages shall meet the following criteria:

The daily average pressure shall not exceed +0.25 inches H_2O.
The daily high pressure shall not exceed +1.5 inches H_2O.

4.6.6 Pressure readings shall be taken in accordance with TP-201.7 (Continuous Pressure Monitoring). Other methods of data collection and analysis may be used with prior approval of the Executive Officer.

4.7 Nozzle Criteria

4.7.1 Each vapor recovery nozzle shall be capable of refueling any vehicle that complies with the fillpipe specifications and can be fueled by a conventional nozzle.

4.7.2 Each vapor recovery nozzle shall be "dripless," meaning that no more than three drops shall occur following each refueling operation. This shall be determined in accordance with TP-201.2D (Post-Fueling Drips from Nozzles).

4.7.3 Each vapor recovery nozzle shall comply with the following:
(a) The terminal end shall have a straight section of at least 2.5 inches (6.34 centimeters) in length;
(b) The outside diameter of the terminal end shall not exceed 0.840 inch (2.134 centimeters) for the length of the straight section; and
(c) The retaining spring or collar shall terminate at least 3.0 inches (7.6 centimeters) from the terminal end.

4.7.4 Additional nozzle criteria are contained in Sections 5 and 6.

4.7.5 A minimum of 10 nozzles must be tested for determination of post fueling drips.

4.8 Liquid Retention

4.8.1 Liquid retention in the nozzle and vapor path on the atmospheric pressure side of the vapor check valve shall not exceed 100 ml per 1,000 gallons. This shall be determined in accordance with TP-201.2E (Gasoline Liquid Retention in Nozzles and Hoses).

4.8.2 Nozzle "spitting" shall not exceed 1.0 ml per nozzle per test and shall be determined in accordance with TP-201.2E (Gasoline Liquid Retention in Nozzles and Hoses).

4.8.3 The number of self-service refueling operations observed during certification testing of any system for liquid retention **and spitting** shall be not less than:

10 refueling operations per nozzle (not including topoffs); and
4 fill-ups (terminated by automatic shut-off, not including topoffs).

4.8.4 A minimum of 10 nozzles must be tested for determination of liquid retention **and spitting**.

4.9 Nozzle/Dispenser Compatibility

The nozzle and dispenser shall be compatible as follows:

4.9.1 The nozzle and dispenser shall be designed such that the vapor check valve is in the closed position when the nozzle is properly hung on the dispenser.

4.9.2 The nozzle and dispenser shall be designed such that the nozzle cannot be hung on the dispenser with the nozzle valves in the open position.

4.10 Unihose Multi-Product Dispenser (MPD) Configuration

There shall be only one hose and nozzle for dispensing gasoline on each side of an unihose ~~multi-product dispenser (~~MPD~~)~~. This shall not apply to facilities installed prior to April 1, 2003 unless the facility replaces more than 50 percent of the dispensers. Facility modifications that meet the definition of "major modification" for a Phase II system in D-200 trigger the unihose requirement as the facility is considered a "new installation". Exception: dispensers which must be replaced due to damage resulting from an accident or vandalism may be replaced with the previously installed type of dispenser.

4.11 Vapor Return Piping

The requirements of Sections 4.11.1 through 4.12.2 for the vapor return piping and, if applicable, condensate traps, from the dispenser riser to the underground storage tank, shall apply to any facility installed after April 1, 2003.

4.11.1 The vapor return piping from any fueling point to the underground storage tank shall be free of liquid or fixed blockage.

4.11.2 The Phase II riser shall have a minimum nominal internal diameter of one inch (1" ID). The connection between the Phase II riser and the dispenser shall be made with materials listed for use with gasoline, and shall have a minimum nominal 1" ID.

4.11.3 All new vapor return piping shall have a minimum nominal internal diameter of three inches (3" ID) from the point of the first manifold to the storage tank, including the float vent valve, if applicable. Facilities permitted by a local district prior to the adoption date of this procedure shall be required to meet the minimum three inch diameter standard only upon facility modifications requiring exposing at least 50 percent of the underground vapor return piping.

4.11.4 Wherever feasible, the recommended minimum slope of the vapor return piping, from the dispensers to the tank, shall be at least one-fourth (1/4) inch per foot of run. The minimum slope, in all cases, shall be at least one-eighth (1/8) inch per foot of run.

4.11.5 ~~v~~Vapor return piping shall be constructed of rigid piping (any piping material

with a bend radius that exceeds six feet; the maximum allowable deflection distance is 9 5/8 inches, as determined by TP-201.2G), or shall be contained within rigid piping, or shall have an equivalent method, approved by the Executive Officer, to ensure that proper slope is achieved and maintained. (Note: this does not apply to flexible connectors at potential stress points, such as storage tanks, dispensers, and tank vents.) Rigidity shall be determined in accordance with TP-201.2G (Bend Radius Determination for Underground Storage Tank Vapor Return Piping).

4.11.6 The Executive Officer shall determine, by testing and/or engineering evaluation, the maximum allowable length of vapor return piping for the system.

4.12 Liquid Condensate Traps

Liquid condensate traps (also known as knockout pots and thief ports) are used to keep the vapor return piping clear of liquid when it is not possible to achieve the necessary slope from the dispenser to the underground storage tank.

4.12.1 Liquid condensate traps shall be used only when the minimum slope requirements of 1/8" per foot of run cannot be met due to the topography.

4.12.2 When condensate traps are installed, they shall be:

(a) certified by ARB;
(b) maintained vapor tight;
(c) accessible for inspection upon request;
(d) capable of automatic evacuation of liquid; and
(e) equipped with an alarm system in case of failure of the evacuation system.

4.13 Connections and Fittings

All connections, fittings, or components not specifically certified with an allowable leakrate shall not leak. Vapor leaks may be determined by the use of commercial leak detection solution, or by bagging individual components, when the vapor containment space of the underground storage tank is subjected to a non-zero gauge pressure. (Note: leak detection solution will detect vapor leaks only when a positive gauge pressure exists). The absence of liquid leaks may be verified by visual inspection for seepage or drips.

5. PHASE II PERFORMANCE STANDARDS AND SPECIFICATIONS APPLICABLE TO BALANCE VAPOR RECOVERY SYSTEMS

Table 5-1 summarizes the performance standards and specifications specifically applicable to Phase II Balance vapor recovery systems. These systems are also subject to all of the standards and specifications in Sections 3 and 4, and the applicable requirements in Sections 7 and 8.

Table 5-1
Phase II Performance Standards and Specifications
APPLICABLE TO PHASE II BALANCE VAPOR RECOVERY SYSTEMS

Performance Type	Requirement	Sec.	Std Spec.	Test Procedure
Nozzle Criteria Each Balance Nozzle Shall:	Have an Insertion Interlock Be Equipped with a Vapor Valve	5.1	Spec.	Testing and Eng. Eval.
Insertion Interlock	Verification of No Liquid Flow Prior to Bellows Compression	5.1	Spec.	Testing and Eng. Eval.
Vapor Check Valve Leakrate	$\leq$ 0.07 CFH at 2.0 inches H_2O	5.1	Spec.	TP-201.2B
Bellows Insertion Force	Pounds (force) to Retaining Device Specified by Applicant and Verified During Certification Testing	5.1	Spec.	Testing and Eng. Eval.
Nozzle Pressure Drop	ΔP at 60 CFH of $N_2 \leq$ 0.08 inches H_2O	5.2	Std.	TP-201.2J
Hose Pressure Drop [Including Whip Hose]	ΔP at 60 CFH of $N_2 \leq$ 0.09 inches H_2O	5.2	Std.	TP-201.2J
Breakaway Pressure Drop	ΔP at 60 CFH of $N_2 \leq$ 0.04 inches H_2O	5.2	Std.	TP-201.2J
Dispenser Pressure Drop	ΔP at 60 CFH of $N_2 \leq$ 0.08 inches H_2O	5.2	Std.	TP-201.2J
Swivel Pressure Drop	ΔP at 60 CFH of $N_2 \leq$ 0.01 inches H_2O	5.2	Std.	TP-201.2J
Pressure Drop Phase II Riser to Tank [Including Vapor Return Line Impact Valve)	ΔP at 60 CFH of $N_2 \leq$ 0.05 inches H_2O	5.2	Std.	TP-201.4
Pressure Drop from Nozzle to UST	ΔP at 60 CFH of $N_2 \leq$ 0.35 inches H_2O ΔP at 80 CFH of $N_2 \leq$ 0.62 inches H_2O	5.2	Std.	TP-201.4
Liquid Removal Systems	Capable of Removing 5 ml/ gal. (average)	5.3	Std.	TP-201.6

5.1 Balance Nozzle Criteria

Nozzles for use with balance systems shall comply with all of the criteria in Section 4.7, as well as all the criteria below.

5.1.1 Each balance nozzle shall have an insertion interlock designed to prevent the dispensing of fuel unless there is an indication that the nozzle is engaged in the fillpipe (i.e., the nozzle bellows is compressed). The performance specifications for the insertion interlock mechanism shall be established during the certification process.

5.1.2 Each balance nozzle shall be equipped with a vapor valve. The leakrate for the vapor valve shall not exceed 0.07 CFH at a pressure of 2.0 inches H_2O.

5.1.3 The force necessary to compress the nozzle bellows to the retaining device, or a specified distance, shall be specified by the applicant for certification and verified during certification testing. The applicant shall include a protocol to test the nozzle bellows compression force in the certification application. This procedure is subject to engineering evaluation and approval by the Executive Officer.

5.2 Dynamic Pressure Drop Criteria for Balance Systems

5.2.1 The dynamic pressure drop for balance systems shall be established in accordance with TP-201.4 (Dynamic Back Pressure). The dynamic pressure drop standards from the tip of the nozzle spout to the underground storage tank, with the Phase I vapor poppet open, shall not exceed the following:

0.35 inches H_2O at a flowrate of 60 CFH of Nitrogen; and
0.62 inches H_2O at a flowrate of 80 CFH of Nitrogen.

5.2.2 The dynamic pressure drop for balance system components, measured in accordance with TP-201.2J (Pressure Drop Bench Testing of Vapor Recovery Components), shall not exceed the following:

Nozzle:	0.08 inches H_2O
Hose (Including Whip Hose):	0.09 inches H_2O
Breakaway:	0.04 inches H_2O
Dispenser:	0.08 inches H_2O
Swivel:	0.01 inches H_2O

The dynamic pressure drop for the balance system vapor return line, including the impact valve, shall not exceed the following:

Phase II Riser to UST:	0.05 inches H_2O

The applicant may request to be certified to a dynamic pressure lower than those specified above. This shall be specified in the application and verified during certification testing.

5.3 Liquid Removal Systems

Liquid removal systems shall be required in configurations that would otherwise be subject to liquid blockage.

The liquid removal rate shall be determined in accordance with TP-201.6 (Determination of Liquid Removal of Phase II Vapor Recovery Systems of Dispensing Facilities). The minimum removal rate, averaged over a minimum of 4 gallons, shall equal or exceed 5 ml per gallon. The minimum dispensing rate for this requirement shall be specified during the certification process.

6.0 PHASE II PERFORMANCE STANDARDS AND SPECIFICATIONS APPLICABLE TO ALL ASSIST VAPOR RECOVERY SYSTEMS

Table 6-1 summarizes the performance standards and specifications specifically applicable to Phase II Assist vapor recovery systems. These systems are also subject to all of the standards and specifications in Sections 3, 4 and the applicable requirements in Sections 7 and 8.

Table 6-1
Phase II Performance Standards and Specifications
APPLICABLE TO ALL PHASE II VACUUM ASSIST SYSTEMS

Performance Type	Requirement	Sec.	Std. Spec.	Test Procedure
Nozzle Criteria Each Assist Nozzle Shall:	Possess a Mini-Boot Have an Integral Vapor Valve	6.1	Spec.	Testing and Eng. Eval.
Nozzle Vapor Valve Leakrate	$\leq$ 0.038 CFH at +2.0 inches H_2O $\leq$ 0.10 CFH at –100 inches H_2O	6.1	Spec.	TP-201.2B
Nozzle Pressure Drop Specifications ΔP at Specified Vacuum Level	Specified by Applicant and Verified During the Certification Process	6.1	Spec.	TP-201.2J
Maximum Air to Liquid Ratio	1.00 (without processor) 1.30 (with processor)	6.2	Std.	TP-201.5
Air to Liquid Ratio Range	Specified by Applicant and Verified During the Certification Process	6.2	Spec.	TP-201.5

6.1 Nozzle Criteria

6.1.1 Nozzles for use with assist systems shall comply with all of the criteria in Section 4.7, as well as all the criteria below.

6.1.2 Each assist nozzle shall be equipped with a mini-boot that both allows for a lower A/L ratio and minimizes the quantity of liquid gasoline exiting the fillpipe during a spitback event.

6.1.3 Each assist nozzle shall be equipped with a vapor valve. The leakrate for the vapor valve shall not exceed the following:

0.038 CFH at a pressure of +2.0 inches H_2O; and
0.10 CFH at a vacuum of −100 inches H_2O.

6.1.4 The nozzle pressure drop shall be specified by the applicant and verified during the certification process.

6.2 Air to Liquid Ratio

The air to liquid (A/L) ratio shall be specified by the applicant and verified during the certification process in accordance with TP-201.5 (Air to Liquid Volume Ratio). The maximum A/L shall not exceed the following:

1.00 (without processor); and
1.30 (with processor).

7. PHASE II PERFORMANCE STANDARDS AND SPECIFICATIONS APPLICABLE TO ASSIST SYSTEMS UTILIZING A CENTRAL VACUUM UNIT

Table 7-1 summarizes the performance standards and specifications specifically applicable to Phase II Assist vapor recovery systems utilizing a Central Vacuum Unit. These systems are also subject to all of the standards and specifications in Sections 3, 4, 6 and, if applicable, Section 8.

Table 7-1
Phase II Performance Standards and Specifications
APPLICABLE TO ALL PHASE II ASSIST SYSTEMS
UTILIZING A CENTRAL VACUUM UNIT

Performance Type	Requirement	Sec.	Std. Spec.	Test Procedure
Specification of Minimum and Maximum Vacuum Levels	Specified by Applicant and Verified During the Certification Process	7.1	Spec.	Testing and Eng. Eval.
Number of Refueling Points Per Vacuum Device	Specified by Applicant and Verified During the Certification Process; and Challenge Mode Testing	7.2	Spec.	TP-201.5

7.1 Vacuum Levels Generated by the Collection Device

The normal operating range of the system shall be specified by the applicant and verified during the certification process, and the maximum and minimum vacuum levels shall be specified in the certification Executive Order. The applicant may propose challenge mode testing to extend the limits of the operating range.

7.2 Maximum Number of Refueling Points per Vacuum Device

The maximum number of refueling points that can be adequately associated with the vacuum device, including meeting the A/L limits, shall be specified by the applicant and verified during certification testing. The test shall be conducted with all of the refueling points except one using the same fuel grade, and the refueling point on which the effectiveness is being tested using a different fuel grade. An engineering evaluation followed by certification testing shall demonstrate the system's ability to meet the required A/L ratio and/or emission factor with a self-adjusting submersible turbine pump (STP).

8. PHASE II PERFORMANCE STANDARDS AND SPECIFICATIONS APPLICABLE TO SYSTEMS UTILIZING A DESTRUCTIVE OR NON-DESTRUCTIVE PROCESSOR

Tables 8-1 and 8-2 summarize the performance standards and specifications specifically applicable to Phase II vapor recovery systems utilizing a processor. These systems are also subject to all of the standards and specifications in Sections 3 and 4 and, the applicable provisions of Sections 5, 6, and 7.

Table 8-1
Phase II Performance Standards and Specifications
APPLICABLE TO ALL PHASE II SYSTEMS
UTILIZING A DESTRUCTIVE PROCESSOR

Performance Type	Requirement	Sec.	Std. Spec.	Test Procedure
Hazardous Air Pollutants (HAPS) from the processor	HAPS from the Processor Shall Not Exceed these Limits: 1,3-Butadiene: 1.2 lbs/year Formaldehyde: 36 lbs/year Acetaldehyde: 84 lbs/year	8.1, 8.2	Std.	TP-201.2H
Maximum HC Rate from Processor	≤ 5.7 lb/1,000 gallons (in breakdown mode)	8.3	Spec.	Testing and Eng. Eval.
Typical Load on Processor	Specified by Applicant and Verified during the Certification Process	8.4	Spec.	Testing and Eng. Eval.
Processor Operation Time	Specified by Applicant and Verified during the Certification Process	8.5	Spec.	Testing and Eng. Eval.

Table 8-2
Phase II Performance Standards and Specifications
APPLICABLE TO ALL PHASE II SYSTEMS
UTILIZING A NON-DESTRUCTIVE PROCESSOR

Performance Type	Requirement	Sec.	Std. Spec.	Test Procedure
Maximum HC Rate from Processor	≤ 5.7 lb/1,000 gallons (in breakdown mode)	8.3	Spec.	Testing and Eng. Eval.
Typical Load on Processor	Specified by Applicant and Verified during the Certification Process	8.4	Spec.	Testing and Eng. Eval.
Processor Operation Time	Specified by Applicant and Verified during the Certification Process	8.5	Spec.	Testing and Eng. Eval.

8.1 Processor Emission Factors

The emission factors shall be established in accordance with TP-201.2 (Efficiency and Emission Factor for Phase II Systems).

8.2 Hazardous Air Pollutants from Destructive Processors

Hazardous Air Pollutants (HAPS) from facilities using processors shall not exceed the following limits:

1,3-Butadiene: 1.2 pounds per year
Formaldehyde: 36 pounds per year
Acetaldehyde: 84 pounds per year

The emission factor shall be established in accordance with TP-201.2H (Determination of Hazardous Air Pollutants from Vapor Recovery Processors).

8.3 Maximum Hydrocarbon Feedrate from the Processor

The maximum Hydrocarbon feedrate from the processor, in breakdown mode, shall not exceed 5.7 pounds per 1,000 gallons.

8.4 Typical Load on the Processor

The typical load on the processor shall be identified by the applicant and verified during the certification process, and shall be included in the specifications in the certification Executive Order.

8.5 Processor Operation Time

The typical processor operation time shall be identified by the applicant and verified during the certification process, and shall be included in the specifications in the certification Executive Orders.

9. IN-STATION DIAGNOSTIC SYSTEMS

9.1 General Requirements

9.1.1 All GDF vapor recovery systems, unless specifically exempted, shall be equipped with an In-Station Diagnostic (ISD) system. Gasoline dispensing facilities that dispense less than or equal to 600,000 gallons per year are exempted from ISD requirements.

9.1.2 All GDF vapor recovery systems shall be equipped with an ISD system or device that has the capability to automatically prohibit the dispensing of fuel and has the capability to automatically inform the station operator in the event of either a malfunction, failure, or degradation of the system as defined below in Section 9.2.

9.1.3 All ISD systems shall be equipped with an RS232 port to remotely access ISD status information using standardized software.

9.1.4 The ISD manufacturer shall provide a means of testing and calibrating the sensors or devices installed on the GDF vapor recovery ISD system, including procedures for verifying that the ISD system operates properly. The means of testing and calibration shall be verified and subjected to challenge mode testing during the certification process.

9.1.5 Personnel trained and certified by the Executive Order certification holder, ISD manufacturers, or California Contractors State License Board shall test and calibrate the installed vapor recovery ISD system sensors or devices annually, at a minimum, with test equipment calibrated to National Institute of Standards and Technology-traceable standards. The minimum annual calibration frequency requirement may be waived and replaced with a frequency to be determined during certification testing if the ISD system manufacturer demonstrates equivalent self testing and automatic calibration features. All vapor recovery ISD system sensors or devices not performing in conformance with the manufacturer's specifications shall be promptly repaired or replaced.

9.1.6 Subject to the Executive Officer approval, other monitoring strategies may be used provided the manufacturer provides a description of the strategy and supporting data showing such strategy is equivalent to these requirements. Information such as monitoring, reliability, and timeliness shall be included.

9.1.7 The vapor recovery ISD system shall include self-testing including the ISD system and sensors that will be verified during the certification process.

9.1.8 The ISD system shall maintain an electronic archive of monthly reports for a period of 12 months and an archive of daily reports for the last rolling 365 days.

9.1.9 The vapor recovery ISD system shall be operational a minimum of ninety five percent (95%) of the time, based on an annual basis or prorated thereof, and shall record the percentage of ISD up-time on a daily basis.

9.1.10 The Executive Officer shall, during certification testing, verify that the system is capable of detecting failures (of a size defined in each subsection, below) with at least a 95% probability while operating at no more than a 1% probability of false alarms. A false alarm occurs when the ISD system issues an alarm, but the vapor recovery system is functioning normally; i.e., the vapor recovery system is operating within the parameter limits required by CP-201 and specified in its Executive Orders.

9.1.11 Certification testing shall be performed in accordance with TP-201.2I (Test Procedure for In-Station Diagnostic Systems).

9.2 Monitoring Requirements

9.2.1 Air/Liquid (A/L) Ratio Vapor Collection Monitoring

(a) Requirement

The GDF vapor recovery ISD system shall monitor the Air to Liquid (A/L) ratio for vapor recovery systems which have A/L limits required by Section 6 and specified in their Executive Orders.

(b) Malfunction Criteria – Gross Failure

The GDF vapor recovery ISD system shall assess, on a daily basis, based on a minimum of 15 non-ORVR dispensing events, when the A/L ratio is at least 75% below the lower certified A/L ratio or at least 75% above the upper certified A/L ratio, shall activate a warning alarm, and shall record the event. This condition must be detected with a probability of 95%. If fewer than 15 non-ORVR dispensing events occur in a day, the ISD system may accumulate events over an additional day or days until a minimum of 15 non-ORVR events is reached. When two such consecutive failed assessments occur, the ISD system shall activate a failure alarm, record that event, and prohibit fuel dispensing from the affected fueling point(s). The ISD system shall have the capability of re-enabling dispensing, and shall record that event.

For example, for a vapor recovery system that is certified to operate with an A/L ratio between 0.9 and 1.0, a failed assessment shall occur if the daily A/L ratio is less than or equal to .22 (25% of .9) or if the daily ratio is greater than or equal to 1.75 (75% more than 1.0). When the ISD system assesses two consecutive failures, the ISD system shall activate an alarm.

(c) Malfunction Criteria - Degradation

The GDF vapor recovery ISD system shall assess, on a weekly basis, based on a minimum of 30 non-ORVR dispensing events, when the A/L ratio is at least 25% below the lower certified A/L ratio or at least 25% above the upper certified A/L ratio, shall activate a warning alarm, and shall record the event. This condition must be detected with a probability of 95%. If fewer than 30 non-ORVR dispensing events occur in a week, the ISD system may accumulate events over an additional day or days until a minimum of 30 non-ORVR events is reached. When two such consecutive failed assessments occur, the ISD system shall activate a failure alarm, record that event, and prohibit fuel dispensing from the affected fueling point(s). The ISD system shall have the capability of re-enabling dispensing, and shall record that event.

For example, for a vapor recovery system that is certified to operate with an A/L ratio between 0.9 and 1.0, a failed assessment shall occur if the weekly A/L ratio is less than or equal to .68 (75% of .9) or if the weekly ratio is greater than or equal to 1.25 (25% more than 1.0). When the ISD system assesses two consecutive failures, the ISD system shall activate an alarm.

9.2.2 Balance Performance Vapor Collection Monitoring

(a) Requirement

The GDF vapor recovery ISD system shall monitor vapor collection performance for balance vapor recovery systems. Vapor collection performance is defined as the amount of vapor collected relative to fuel dispensed to a non-ORVR vehicle. The baseline vapor collection performance is established during certification as described in TP-201.2I.

(b) Malfunction Criteria

The GDF vapor recovery ISD system shall assess, on a daily basis, based on a minimum of 15 non-ORVR dispensing events, when the vapor collection performance is less than 50%, shall activate a warning alarm, and shall record the event. The vapor collection performance can be monitored using flowmeters, pressure transducers, liquid sensors or any other means that indicates a 50% vapor collection decrease from the baseline. This condition must be detected with a probability of 95%. If fewer than 15 non-ORVR dispensing events occur in a day, the ISD system may accumulate events over an additional day or days until a minimum of 15 non-ORVR events is reached. When two such consecutive failed assessments occur, the ISD system shall activate a failure alarm, record that event, and prohibit fuel dispensing from the affected fueling point(s). The ISD system shall have the

capability of re-enabling dispensing, and shall record that event.

9.2.3 Central Vacuum Unit Monitoring

(a) Requirement

The GDF vapor recovery ISD system shall verify that the central vacuum unit is operating within the specified range by measuring and recording the vacuum at a minimum of one reading every minute.

(b) Malfunction Criteria

The GDF vapor recovery ISD system shall assess, on a continuous rolling 20 minute basis, when a vacuum failure occurs as determined by the Executive Officer for each Phase II system, shall activate a failure alarm, record the event, and prohibit fuel dispensing from the affected fueling point(s). This condition must be detected with a probability of 95%. The ISD system shall have the capability of re-enabling dispensing and will disable the central vacuum unit monitoring for 24 hours, and shall record that event.

9.2.4 Ullage Pressure Vapor Containment Monitoring

(a) Requirement

The GDF vapor recovery ISD system shall measure and record the pressure of each UST ullage at a minimum of one reading every minute. One pressure monitoring device may be used for multiple USTs that have common vapor recovery piping.

(b) Malfunction Criteria – Gross Failure

The GDF vapor recovery ISD system shall assess, on a weekly basis, when the UST ullage pressure exceeds 1.5” wcg for at least 5% of the time, shall activate a warning alarm, and shall record the event. This condition must be detected with a probability of 95%. When two such consecutive failed assessments occur, the ISD system shall activate a failure alarm, record that event, and prohibit fuel dispensing from the affected fueling point(s). The ISD system shall have the capability of re-enabling dispensing, and shall record that event.

(c) Malfunction Criteria – Degradation

The GDF vapor recovery ISD system shall assess, on a monthly basis, when the UST ullage pressure exceeds 0.50" wcg for at least 25% of the time, shall activate a warning alarm, and shall record the event. This condition must be detected with a probability of 95%. When two such consecutive failed assessments occur, the ISD system shall activate a failure alarm, record that event, and prohibit fuel dispensing

from the affected fueling point(s). The ISD system shall have the capability of re-enabling dispensing, and shall record that event.

(d) Malfunction Criteria – Pressure Integrity

The ISD system shall detect the potential for excessive rates of vapor leakage from the UST system. The ISD system shall assess, on a weekly basis, when the vapor recovery system leaks at a rate which is at least 2 times the rate allowed in section 4.2, shall activate a warning alarm, and shall record the event. This condition must be detected with a probability of 95%. When two such consecutive failed assessments occur, the ISD system shall activate a failure alarm, record that event, and prohibit fuel dispensing from the affected fueling point(s). The ISD system shall have the capability of re-enabling dispensing, and shall record that event.

9.2.5 Vapor Processing Monitoring

(a) Requirement

The GDF vapor recovery ISD system shall verify that the processor is functioning properly as specified in Section 8 and the Executive Order.

(b) Malfunction Criteria

The GDF vapor recovery ISD system shall assess, on a daily basis, when the vapor processor is malfunctioning as defined in the Executive Order, shall activate a warning alarm, and shall record the event. When two such consecutive failed assessments occur, the ISD system shall activate a failure alarm, record that event, and prohibit fuel dispensing from the affected fueling point(s). The ISD system shall have the capability of re-enabling dispensing, and shall record that event.

9.3 Records

9.3.1 The GDF vapor recovery ISD system shall generate a monthly report which includes the following:

(a) ISD operational time (as a percentage);
(b) Vapor Recovery system's operating requirements;
(c) Vapor recovery system pass time (as a percentage);
(d) ISD monitoring requirements;
(e) Warnings - this shall include the time and date;
(f) Failures - this shall include the time and;
(g) Event log describing re-enabling action taken - this shall include the time and date; and the time and date the ISD system clock was adjusted.

9.3.2 The GDF vapor recovery ISD system shall generate a monthly printout version

on demand which includes the following:

(a) ISD operational time (as a percentage);
(b) Vapor recovery system pass time (as a percentage);
(c) Warnings - this shall include the time and date of the last ten warnings in the selected month;
(d) Failures - this shall include the time and date of the last ten failures in the selected month;
(e) Event Log - this shall include the time and date of the last ten logged exception events in the selected month including re-enabling actions taken and any ISD system clock adjustments.

9.3.3 The GDF vapor recovery ISD system shall generate a daily report which includes the following:

(a) Record of the percentage of ISD up-time on a daily basis;
(b) Highest ullage pressure;
(c) Lowest ullage pressure;
(d) 75th percentile ullage pressure;
(e) 95th percentile ullage pressure;
(f) Daily measured values of each fueling point; and
(g) Daily pass or fail assessment for each fueling point, and
(h) Processor Assessment.

9.3.4 Daily reports (as outlined in Section 9~~10~~.3.3) and monthly printout versions (as outlined in Section 9~~10~~.3.2) shall be available for printing, on demand, at the GDF site from the integral ISD printer. Daily reports shall be available for printing for the previous 30 days. Monthly printout versions shall be available for printing for the previous 12 months.

9.3.5 The ISD system shall store the electronic records of the monthly reports, monthly printout versions, and daily reports, such that the records are maintained despite loss of power to the ISD system.

9.4 Tampering Protection

The GDF vapor recovery ISD system sensors or devices shall be designed and installed in a manner designed to resist unauthorized tampering and to clearly show by visual inspection if tampering has occurred. The ISD system shall be designed and installed so that the station can not dispense fuel unless the ISD system is operating. The manufacturer shall include measures to prevent tampering of the GDF vapor recovery ISD system in the application. All tampering features are subject to Executive Officer approval.

9.5 Readiness/Function Code

The GDF vapor recovery ISD system shall store a code upon first completing a full diagnostic check of all monitored components and systems. This is applicable when the GDF vapor recovery ISD system is initially installed or when power is restored.

9.6 Stored Vapor Recovery System Conditions

Upon detection of a vapor recovery component or system failure the GDF vapor recovery system conditions shall be stored in computer memory. Subject to Executive Officer approval, stored GDF vapor recovery system conditions shall include, but are not limited to, the time, date, which fueling point was shut down (if applicable), and the fault code.

9.7 Challenge Mode Testing

The Executive Officer shall conduct, or shall contract for and observe, challenge mode testing using test procedures to verify that the ISD system can detect various types of failures, record the incidence of such failures, and respond accordingly with alarms and/or by prohibiting fuel dispensing, as applicable. The ISD system shall have the capability of re-enabling dispensing, and shall record that event. Challenge mode testing shall include verification that interaction with ORVR-equipped vehicles will not cause the ISD to inappropriately identify a failure condition. ISD systems with false positive determinations in excess of one percent (1%) shall not be certified.

9.8 Electronic Access

The monthly and daily reports shall be made available on demand through an RS-232 serial port on a standardized data link connector. All ISD reports shall be electronically accessible with standardized software.

10. CERTIFICATION OF VAPOR RECOVERY SYSTEMS

The Executive Officer shall certify only those vapor recovery systems that, based on testing and engineering evaluation of that system's design, component qualities, and performance, are demonstrated to meet all applicable requirements of this certification procedure. Except as provided in Sections 18 and 19, this certification procedure should not be used to certify individual system components. Steps and conditions of the certification process, along with the Sections of this document that describe them, are outlined below.

(a)	Application Process	Section 11
(b)	Evaluation of the Application	Section 12
(c)	Vapor Recovery System Certification Testing	Section 13
(d)	Alternate Test and Inspection Procedures	Section 14
(e)	Documentation of Certification	Section 15
(f)	Duration and Conditions of Certification	Section 16
(g)	Certification Renewal	Section 17
(h)	Amendments to Executive Orders	Section 18

10.1 Each applicant submitting a system and/or component for certification shall be charged fees not to exceed the actual cost of evaluating and testing the system to determine whether it qualifies for certification. The applicant is required to demonstrate ability to pay the cost of testing prior to certification and performance testing. Applicants may request a payment plan for testing and certification costs. Requests for a payment

plan should be submitted in writing to the Executive Officer and should include the payment frequency (monthly, quarterly, etc.) and amount of each payment to meet the obligation. Failure to fulfill the conditions of payment may result in revocation of the Executive Order.

11. APPLICATION PROCESS

All of the information specified in the following subsections shall be submitted to the Executive Officer for an application to be evaluated. An application for certification of a Phase I or Phase II vapor recovery system may be made to the Executive Officer by any applicant.

The applicant for certification shall identify, in the preliminary application, the standard(s) or specification(s) with which the system complies, and demonstrate that the proposed system meets the primary performance standard(s) or specification(s) required by sections 3 through 9 of this Procedure. For the preliminary application, the applicant shall have performed tests for all applicable performance specifications and standards. Engineering reports of successful test results for all these tests must be included in the preliminary application. In order to expedite the application process, the Executive Officer may determine that the application is acceptable based on the results of abbreviated operational and/or efficiency/emission factor testing and spillage. Test results shall be submitted for an operational test of at least 30 days, for a test of at least 50 vehicles demonstrating adequate collection, and for at least 200 observations of spillage (including at least 40 percent fill~~s~~-ups), or equivalent verification that the system is capable of meeting the performance standards and specifications.

The system, as characterized by these reports, shall be subjected to an engineering evaluation. If the preliminary application is deemed acceptable, the applicant shall be notified and shall expeditiously install the system for certification testing. If the preliminary application is deemed unacceptable, applicants will be notified of any deficiencies within 60 days. The final application shall not be deemed complete until it contains the results of all necessary testing, the approvals of other agencies, the finalized operating and maintenance manuals, and all other requirements of certification.

The manufacturer shall demonstrate, to the satisfaction of the Executive Officer, that the GDF vapor recovery ISD system complies with the performance standards under actual field conditions and simulated failures. Such demonstrations shall include the submission of test results with the certification application.

Estimated timelines for evaluation of certification applications are provided below.

Table 11-1
Estimated Timeline for the Certification Application Process

Action	Time	Determination	ARB Response
Preliminary Application Filed	60 days	Acceptable	Preliminary Application Accepted Test Site Approval Granted
Preliminary Application Filed	60 days	Unacceptable	Notification of Deficiencies
Application Resubmitted	30 days	Acceptable	Preliminary Re-Application Accepted Test site Approval Granted
Application Resubmitted	30 days	Unacceptable	Initial Re-Application Returned with Notation of Deficiencies
Final Application Complete	120 days	Acceptable	Executive Officer Issues Certification Executive Order
Final Application Complete	120 days	Unacceptable	Executive Officer Denies Certification

The application shall be written and signed by an authorized representative of the applicant, and shall include all of the items listed below.

(a) Description of Vapor Recovery System (§11.1)
(b) Description of In-Station Diagnostics System (§11.2)
(c) Materials Compatibility with Fuels (§11.3)
(d) Evidence of Compatibility of the System (§11.3)
(e) Evidence of Reliability of the System (§11.4)
(f) Installation and Maintenance Requirements of the System (§11.5)
(g) Evidence of Financial Responsibility of the Applicant (§11.6)
(h) A C~~c~~opy of the W~~w~~arranty (§11.7)
(i) Request for and I~~i~~nformation about P~~p~~roposed ~~t~~Test ~~s~~Station (§11.8)
(j) Notification of System Certification Holder, if applicable (§11.9)
(k) Equipment Defect Identification and Test Protocols (§11.10)
(l) Challenge Modes and Test Protocols (§11.11)
(m) Other Information (§11.12)

11.1 Description of Vapor Recovery System

The application shall include a complete description of the system concept, design and operation, including, but not limited to, the following items.

11.1.1 Identification of critical system operating parameters. An engineering evaluation of the system will be performed by ARB to evaluate any proposed specifications and to establish additional performance specifications if required.

11.1.2 Engineering drawings of system, components, and underground piping and tank configurations for which certification is requested.

11.1.3 Engineering parameters for dispenser vapor system control boards and/or all vapor piping, pumps, nozzles, hanging hardware, vapor processor, etc.

11.1.4 Listing of components and evidence that the manufacturers of any components intended for use with the system and not manufactured by the applicant have been notified of the applicant's intent to obtain certification.

11.1.5 Applicable performance standards and specifications of components, specifically identifying those which exceed the minimum acceptable specifications and for which certification of superior performance is requested, and test results demonstrating compliance with these specifications.

11.1.6 Results of tests demonstrating that the system and components meet all the applicable performance standards. These tests shall be conducted by, or at the expense of, the applicant.

11.1.7 If the application is for an innovative system, the applicant shall identify the performance standard(s) or specification(s) with which the system does not comply. The applicant shall supply any necessary alternative test procedures, and the results of tests demonstrating that the system complies with the emission factor/efficiency. The applicant shall also supply test results demonstrating that the emission benefits of the innovation are greater than the consequences of failing to meet the identified performance standard or specification.

11.1.8 Any additional specifications of the system including, but not limited to, underground pipe sizes, lengths, fittings, volumes, material(s), etc.

11.1.9 Estimated retail price of the system.

11.1.10 For previously tested systems, identification of any and all new components and physical and operational characteristics, together with new test results obtained by the applicant.

11.2 Description of In-Station Diagnostics (ISD)

The applicant shall include the following documentation with the certification application.

11.2.1 A written description of the functional operation of the GDF vapor recovery ISD system.

11.2.2 A table providing the following information shall be included for each monitored component or system, as applicable:

(a) Corresponding fault code;

(b) Monitoring method or procedure for malfunction detection;
(c) Primary malfunction detection parameter and its type of output signal;
(d) Fault criteria limits used to evaluate output signal of primary parameter;
(e) Other monitored secondary parameters and conditions (in engineering units) necessary for malfunction detection;
(f) Monitoring time length and frequency of checks;
(g) Criteria for storing fault code;
(h) Criteria for notifying station operator; and
(i) Criteria used for determining out of range values and input component rationality checks.

11.2.3 A logic flowchart describing the general method of detecting malfunctions for each monitored emission-related component or system.

11.2.4 A written detailed description of the recommended inspection and Maintenance procedures, including inspection intervals that will be provided to the gasoline dispensing facility operator.

11.2.5 A written detailed description of the training plan to train and certify system testers, repairers, installers, and rebuilders.

11.2.6 A written description of the manufacturer's recommended quality control checks.

11.2.7 A written description of calibration and diagnostic checks.

11.2.8 A list of system components that are monitored by the ISD system and test procedures for challenge mode testing. The Executive Officer may modify the list or test procedures based on an engineering evaluation. Additional procedures may be developed as necessary to verify that the system's self-check and self-test features perform accurately.

11.3 Compatibility

11.3.1 The applicant shall submit evidence of system compatibility, including the following:

11.3.2 A procedure developed by the applicant for demonstrating compatibility between the Phase II vapor recovery system and ORVR-equipped vehicles shall be submitted, along with the test results demonstrating compatibility. The procedure shall comply with the provisions in Section 4.4.

11.3.3 Evidence demonstrating the compatibility of the Phase II system with any type of Phase I system with which the applicant wishes the Phase II system to be certified, as specified in Section 4.5. Continuous recordings of pressure readings in the underground storage tank, as well as challenge mode tests, may be used for this demonstration.

11.3.4 Evidence that the system can fuel any vehicle meeting state and federal fillpipe specifications and capable of being fueled by a non-vapor-recovery nozzle.

11.3.5 The applicant shall provide information regarding the materials specifications of all components, including evidence of compatibility with all fuels in common use in California and approved as specified in Section 3.8. If the applicant is requesting a certification for use only with specified fuel formulations, the applicant shall clearly identify, in the application, the included and excluded fuel formulations for which certification is requested.

11.4 Reliability of the System

In order to ensure ongoing compliance, adequately protect public health, and protect the end-user, the reliability of the system shall be addressed in the application, including the following:

11.4.1 The expected life of system and components.

11.4.2 Description of tests conducted to ascertain compliance with performance standards and specifications for the expected life of the system or component, any procedures or mechanisms designed to correct problems, and test results.

11.4.3 Identification of and emission impact of possible failures of system, including component failures

11.4.4 Procedure and criteria for factory testing (integrity, pressure drop, etc.)

11.5 Installation, Operation, and Maintenance of the System

The installation, operation, and maintenance plan shall be submitted, and shall include at least the following items:

11.5.1 Installation, operation, and maintenance manuals of the system, including the ISD.

11.5.2 A plan for training installers in the proper installation of the system.

11.5.3 A replacement parts program.

11.5.4 The estimated installation costs and yearly maintenance costs.

11.6 Evidence of Financial Responsibility

The applicant shall submit evidence of financial responsibility to ensure adequate protection to the end-user of the product as specified in Section 16 and to demonstrate the ability to pay for certification tests.

11.7 Warranty

The applicant shall submit a copy of the warranty for the system, warranties for each component, and samples of component tags or equivalent method of meeting warranty requirements as specified in Section 16.

11.8 Test Station

11.8.1 The vapor recovery system shall be installed and tested in an operating gasoline dispensing facility for the purpose of certification testing.

11.8.2 The applicant shall make arrangements for the vapor recovery system to be installed in an operating gasoline dispensing facility meeting the requirements of Section 13.1.

11.8.3 The request for designation as a test site shall include the following information:

(a) Location of the facility;
(b) Verification of throughput for at least six months; and
(c) Hours of operation.

11.8.4 The applicant shall submit final construction diagrams of the proposed test station. These drawings shall clearly identify the type of vapor recovery piping and connections, pipe slope, and type of storage tanks (i.e., single or double wall, steel, fiberglass, etc.). The Executive Officer may require Professional Engineer or Architect Approved As-Built drawings of the test site. If such drawings are not obtainable, the applicant may request the Executive Officer to accept alternatives sources of this information, such as detailed schematics of the vapor piping configuration and/or photographs clearly identifying underground components.

11.9 Notification of Certified System Component Manufacturers ~~Certification Holder~~

If the applicant is not the manufacturer of all system components, the applicant shall include evidence that the applicant has notified ~~the~~ **all** component manufacturer~~(s)~~ of the applicant's intended use of the component manufacturers' equipment in the vapor recovery system for which the application is being made.

~~11.9.1 When the applicant is requesting inclusion of one or more components on a certified system, the applicant shall notify the manufacturer, if any, named as the applicant or holder of the executive order for the certified system.~~

~~11.9.2 When the applicant is requesting certification of one or more components as part of a new system, the applicant shall notify all manufacturers.~~

11.10 Equipment Defect Identification and Test Protocols

The application shall identify where failure of system components may result in an equipment defect as defined by section 94006, Title 17, CCR (Vapor recovery

equipment defect, VRED). Test protocols shall be developed by the applicant, and submitted with the certification application, along with test results, observations, or other analyses conducted by the applicant, to determine if the component or system failure meets the criteria of a VRED. These protocols are subject to engineering evaluation and approval by the Executive Officer.

11.11 Challenge Modes and Test Protocols

The application shall identify potential challenge modes, as described in Section 13.4. Test protocols shall be developed and submitted by the applicant, and submitted with the certification application, along with test results, observations, or other analyses conducted by the applicant, to determine if the system meets the applicable standards and specifications when tested in challenge mode. These protocols are subject to engineering evaluation and approval by the Executive Officer.

11.12 Other Information

11.12.1 The applicant shall provide any other information that the Executive Officer reasonably deems necessary.

11.12.2 For a balance type system, the applicant shall provide a specification for the bellows insertion force as specified in Section 5.1. The applicant will include a protocol to test the nozzle bellows compression force in the certification application. This procedure is subject to engineering evaluation and approval by the Executive Officer.

11.12.3 For an assist system, the applicant shall provide specifications for the nozzle pressure drop as specified in Section 6.1 and for the air to liquid ratio as specified in Section 6.2.

11.12.4 For a central vacuum assist system, the applicant shall provide specifications for the minimum and maximum vacuum levels and for the number of refueling points per vacuum device as specified in Sections 7.1 and 7.2, respectively.

11.12.5 For a system with a processor, the applicant shall provide the typical load on the processor and the processor operation time as specified in Sections 8.4 and 8.5 respectively.

12. EVALUATION OF THE APPLICATION

The application for certification of all systems and components shall be subjected to an evaluation by the Executive Officer

The evaluation of the application shall include, but is not limited to, subsections 12.1 through 12.7.

12.1 Performance Standards and Specifications

The system and component performance standards and specifications identified by the applicant shall be reviewed to ensure that they include and conform to the applicable standards and specifications in Sections 3 through 9 of this Procedure.

12.2 Bench and Operational Testing Results

The procedures for, and results of, bench testing and operational testing contained in the application shall be reviewed. The review shall determine if the procedures adhere to required methodology and ensure that the results meet or exceed the standards and specifications in Sections 3 through 9 of this Procedure. The evaluation shall include a determination of necessary verification testing.

12.3 Evaluation of System Concept

The system concept shall be evaluated to ensure that it is consistent with the generally accepted principles of physics, chemistry, and engineering.

12.4 Materials Specifications and Compatibility with Fuel Formulations

The component materials specifications shall be reviewed to ensure chemical compatibility with gasoline and/or any oxygenates that may be present in gasoline on an ongoing or on a seasonal basis, as specified in Section 3.8. This review shall include consideration of the variations in gasoline formulations for octane differences and summer fuel and winter fuel.

12.5 Installation, Operation and Maintenance Manuals

The installation, operation and maintenance manuals for the system and components shall be reviewed for completeness (see Section 16.6). Routine maintenance procedures shall be reviewed to ensure adequacy and determine that the procedures are not unreasonable (see Section 16.6).

12.6 Equipment Defect Identification

The engineering evaluation shall identify where failure of system components may result in a vapor recovery equipment defect (VRED) as defined by section 94006, title 17, CCR. Test protocols may be developed by the applicant to determine if the component or system failure meets the criteria of a VRED. These test protocols, upon approval of the Executive Officer, are applied during certification testing as provided in section 13.4.1. The ARB Executive Officer may, for good cause, require modification of, and/or testing in addition to, VRED testing proposed by the applicant.

All VRED mode test procedures, and the results of tests conducted by the applicant, shall be reviewed. Additionally, all VRED mode testing conducted during the certification process to verify the test results or further evaluate the systems shall be similarly reviewed.

12.7 Challenge Mode Determination

The applicant may propose, and the Executive Officer shall determine, whether additional testing is needed to ensure the system will meet the applicable standards and specifications under various typical operating parameters. Proposed test protocols may be developed by the applicant to determine if the component or system meets the applicable standards and specifications under such conditions. These test protocols, after engineering evaluation and upon approval of the Executive Officer, are applied during certification testing as provided in section 13.4.2. The ARB Executive Officer may, for good cause, require modification of, and/or testing in addition to, challenge mode testing proposed by the applicant.

13. VAPOR RECOVERY SYSTEM CERTIFICATION TESTING

The Executive Officer shall conduct, or shall contract for and observe, testing of vapor recovery systems conducted for the purpose of certification. Except as otherwise specified in Section 14 of this procedure, vapor recovery systems shall be subjected to evaluation and testing pursuant to the applicable performance standards, performance specifications, and test procedures specified in Sections 3 through 9 of this procedure.

Certification testing of vapor recovery systems shall be conducted only after the preliminary application for certification has been found to be acceptable. Some tests may be conducted more than once to characterize the performance of systems and/or system components over time. Except as otherwise provided in Sections 18 and 19 of this procedure, only complete systems shall be certified.

Failure of any component during testing of a Phase I or Phase II system shall be cause for termination of the certification test, except as noted below. Any Phase I or Phase II system and/or component test failures must be investigated by the applicant and an explanation provided to the Executive Officer within one week of the test failure discovery. The Executive Officer may extend this one week time period for good cause. The Executive Officer may consider information and circumstances presented by the applicant, including previous certification testing, to demonstrate that the failure was attributable to something other than the design of the component and/or system, and may allow further testing without modification.

As specified in Section 4, Phase II vapor recovery systems shall be certified only in facilities equipped with a certified Phase I system. During Phase II system certifications, the associated Phase I system shall be subject to all of the standards and specifications in Section 3. Monitoring of Phase I system performance shall be conducted for the purpose of demonstrating compatibility, as required by Section 4.5, as well as to insure that the Phase I system is functioning properly during the Phase II certification test. Any Phase I components identified as not performing correctly shall be replaced and the Phase II system certification continued. However, Phase II system test data collected during any period associated with a Phase I system test failure shall be evaluated for validity.

During Phase II system certifications, failures of any Phase I components that are determined to be unrelated to the performance of the Phase II system shall not be cause for termination of the Phase II system certification. During Phase II certification tests, if any

Phase I component is identified as having performance deficiencies, then a more thorough investigation of the Phase I component/system performance will be initiated by the Executive Officer.

During Phase II system certifications, any Phase I system and/or component performance deficiencies that are determined to be related to the performance of the Phase II system shall be cause for termination of the Phase II system certification, as provided by Section 4.5.

Any applicant or representative of an applicant found to have performed unauthorized maintenance, or to have attempted to conceal or falsify information, including test results and/or equipment failures, may be subject to civil and criminal penalties and testing of the system or component shall be terminated.

13.1 Test Site for Field Testing of Vapor Recovery Systems

The applicant shall make arrangements for the vapor recovery system to be installed in one or more operating GDFs for certification testing, and the applicant shall request, in writing, approval of the GDF as a test site from the Executive Officer. Upon determining that the GDF meets all of the following criteria, the Executive Officer shall, in writing, designate the selected location as a test site, and exempt it from any state or local district prohibition against the installation of uncertified equipment. This shall not exempt it from the prohibition against the offer for sale, or sale, of uncertified equipment. The vapor recovery system shall be installed throughout the entire facility (note this requirement applies to the primary certification test site). The Executive Officer may require that the system be installed in more than one facility for the purpose of testing.

13.1.1 The test station shall have a minimum gasoline throughput of 150,000 gallons/month, as demonstrated over a consecutive six-month period. The minimum allowable monthly throughput for each of the six months is 150,000 gallons/month. The throughput data submitted in the certification application, as specified in Section 11, shall be the most current data available. The test site throughput shall also be shown to comply with this criteria for the six months prior to the start of operational tests.

If the facility is equipped with one hose and nozzle for each gasoline grade, rather than a uni-hose configuration, the minimum throughput requirement shall apply to the gasoline grade with the highest throughput.

13.1.2 The station shall be located within 100 miles of the ARB Sacramento offices. When a suitable location for testing cannot be located within 100 miles of the ARB offices, the Executive Officer may, for good cause, grant approval of a test station elsewhere, provided that all the necessary testing can be conducted at that location. The applicant shall be responsible for any additional costs, such as travel, associated with that location.

13.1.3 Continuous access to the test site by ARB staff, without prior notification, shall be provided. Every effort will be made to minimize inconvenience to the

owner/operator of the facility. If testing deemed necessary cannot reasonably be conducted, the facility shall be deemed unacceptable and the test shall be terminated.

13.1.4 If test status is terminated for any reason, uncertified equipment shall be removed within sixty (60) days, unless the Executive Officer extends the time in writing. The local district with jurisdiction over the facility may impose a shorter time.

13.1.5 All test data collected by the applicant at the test site shall be made available to the Executive Officer within fifteen (15) working days. Continuous data, such as pressure monitoring data, shall be submitted in bimonthly increments within 15 days of the last day of the increment. Failure to provide this information may result in extension or termination of the test. The Executive Officer may specify the format in which the data is to be submitted.

13.1.6 Test site designation may be requested by the applicant, or by another person, for facilities other than the certification test site(s), for the purpose of research and development, or independent evaluation of a system prior to its certification. Approval of such a test site shall be at the discretion of the Executive Officer. The research and development test site shall be subject to all of the above conditions with the exception of 13.1.1 and 13.1.2.

13.1.7 For testing conducted pursuant to Section 18, Phase I certification test sites configured with fewer than three P/V valves may be approved by the Executive Officer.

13.1.8 Phase II certification test sites will be configured with one to three P/V vent valves, each with an associated ball valve.

13.2 Bench Testing of Components

Components identified by the engineering evaluation as requiring bench testing to verify performance standards and specifications shall be submitted to the Executive Officer prior to commencement of operational testing. This testing may be repeated during and/or after the operational testing.

13.3 Operational Test of at Least 180 Days

13.3.1 All vapor recovery systems shall be subjected to an operational test. The duration of the test shall be for a minimum of 180 days, and for a minimum of 900,000 gallons of gasoline throughput, except as otherwise provided in Sections 18 and 19.

13.3.2 No maintenance shall be performed other than that which is specified in the installation, operation and maintenance manual. Such maintenance as is routine and necessary shall be performed only after notification of the Executive Officer. Occurrences beyond the reasonable control of the applicant,

such as vandalism or accidental damage by customers (e.g., drive-offs), shall not be considered cause for failure of the systems.

13.3.3 Except where it would cause a safety problem, maintenance shall not be performed until approval by the Executive Officer has been obtained. In those situations that require immediate action to avoid potential safety problems, maintenance may be performed immediately and the Executive Officer notified as soon as practicable.

13.3.4 For the purpose of certification, the pressure in the underground storage tank (UST) shall be monitored and recorded continuously throughout the operational test in accordance with TP-201.7 (Continuous Pressure Monitoring). Testing in accordance with the procedures specified in TP-201.3, to verify the pressure integrity of the test station, shall be conducted throughout the operational test period, at intervals not to exceed thirty days. Only data collected during periods of pressure integrity shall be deemed valid. No less than three thirty-consecutive-day periods of valid UST pressure data shall be used to verify that the system meets the standard, as specified in Section 4. All valid pressure data shall be used to make this determination. If the system fails to meet the standard, the data may be examined, and the Executive Officer may exclude pressure excursions directly attributable to noncompliant cargo tank deliveries.

13.3.5 Tests of the performance of the system and/or components shall be conducted periodically throughout the operational test period. If the results of such tests, when extrapolated through the end of the warranty period, show a change that results in the degradation of a performance standard or specification, the Executive Officer may extend or terminate the operational test.

13.4 Equipment Defect and Challenge Mode Testing

13.4.1 Equipment Defect Testing

Testing to determine vapor recovery equipment defects as defined by section 94006 of title 17, California Code of Regulations, shall be conducted as part of certification testing. Vapor recovery equipment defect testing may be allowed during the operational test only when the Executive Officer has determined that conducting the testing does not affect the normal operation of the system.

13.4.2 Challenge Mode Testing

Testing to verify that the system meets applicable standards under various GDF operating conditions may be conducted as part of certification testing. Challenge mode tests may be allowed during the operational test only when the Executive Officer has determined that conducting the testing does not affect the normal operation of the system.

13.5 Efficiency and/or Emission Factor Test

Testing to determine the efficiency and/or emission factor of the vapor recovery system shall be conducted in accordance with the applicable test procedures specified

in Section 3 or Section 4 of this procedure. Additional testing may be required if the Executive Officer deems it necessary. The additional testing may include, but is not limited to the determination of the Reid Vapor Pressure of the fuel, the volume and/or mass in the vapor return path, fuel and/or tank temperature, and the uncontrolled emission factor.

~~13.5.1 **Phase I Systems**. A test of the static pressure integrity of the Phase I system may be conducted, in accordance with TP-201.3, no less than 24-hours or more than seven days prior to conducting TP-201.1 or TP-201.1A. Testing, in accordance with TP-201.1 and/or TP-201.1A, shall be conducted at delivery rates typical and representative of the facilities for which certification is requested. More than one test may be required to accomplish this determination. Certification may be limited to specified maximum loading rates. The static pressure integrity of the vapor recovery system shall be verified as soon as possible, but not more than 48 hours, after the completion of this test. Failure of the static pressure integrity test shall invalidate the TP-201.1 or TP-201.1A test results unless the Executive Officer determines that the integrity failure did not result in any significant unmeasured emissions.~~

~~13.5.2 **Phase II Systems**. A test of the static pressure integrity of the Phase II system shall be conducted, in accordance with TP-201.3, no more than seven days and no less than three days prior to conducting TP-201.2. The static pressure integrity of the vapor recovery system, including all test equipment installed for the purpose of conducting TP-201.2, shall be verified as soon as possible, but not more than 48 hours, after the completion of this test. Failure of the static pressure integrity test shall invalidate the TP-201.2 test unless the Executive Officer determines that the integrity failure did not result in any significant unmeasured emissions.~~

13.6 Vehicle Matrix

A representative matrix of ~~200~~ **100** vehicles shall be used when testing to determine the Phase II efficiency for the performance standard. The composition of the representative vehicle matrix shall be determined for each calendar year by the Executive Officer in accordance with TP-201.2A (Determination of Vehicle Matrix for Phase II Systems).

13.6.1 Vehicles will be tested as they enter the dispensing facility ("first in" basis) until a specific matrix block of the distribution is filled.

~~13.6.2 The vehicle matrix shall include a population of ORVR-equipped vehicles consistent with the distribution of ORVR-equipped vehicles in the State of California.~~

13.3.~~3~~**2** The Executive Officer may exclude any vehicle that fails to comply with the vehicle fillpipe specifications (“Specifications for Fill Pipes and Openings of Motor Vehicle Fuel Tanks” incorporated by reference in title 13, CCR, section 2235).

13.6.~~4~~**3** The Executive Officer may exclude a vehicle prior to its dispensing episode only if such exclusion and its reason is documented; e.g. unusual facility conditions beyond the applicant's control or unusual modifications to the vehicle. All data required by the test procedure shall be taken for such vehicles for subsequent review and possible reversal of the exclusion decision made during the test. The only other reasons for excluding a vehicle from the test fleet are incomplete data or the factors in TP-201.2.

13.6.~~5~~**4** Additional vehicles may be chosen for testing at the test site by the Executive Officer. The vehicles shall be chosen, according to the Executive Officer's judgment, so that any of the first ~~200~~ **100** vehicles, which may later be found to have invalid data associated with them, shall have replacements from among the additional vehicles on a "first in" basis.

13.6.~~6~~**5** A matrix of fewer than ~~200~~ **100** vehicles may be made by deleting up to a maximum of three vehicles by reducing the representation in any cell or combination of cells of the vehicle matrix as specified by TP-201.2A, subject to the following requirements for each candidate reduced cell.

(a) No cell shall be reduced by more than one vehicle
(b) At least one dispensing episode has already been tested in each cell.
(c) None of the other dispensing episodes in the cell have yielded field data which, in the Executive Officer's judgment, would cause a failure to meet the standards specified in section 4.1.
(d) All tested dispensing episodes in all cells have yielded field data that, in the Executive Officer's judgment, would yield valid test results after subsequent review and evaluation.

14. ALTERNATE TEST PROCEDURES AND INSPECTION PROCEDURES

Test procedures other than those specified in this certification procedure shall be used only if prior written approval is obtained from the Executive Officer. A test procedure is a methodology used to determine, with a high degree of accuracy, precision, and reproducibility, the value of a specified parameter. Once the test procedure is conducted, the results are compared to the applicable performance standard to determine the compliance status of the facility. Test procedures are subject to the provisions of Section 41954(h) of the H&SC.

14.1 Alternate Test Procedures for Certification Testing

The Executive Officer shall approve, as required, those procedures necessary to verify the proper performance of the system.

14.2 Request for Approval of Alternate Test Procedure

Any person may request approval of an alternative test procedure. The request shall include the proposed test procedure, including equipment specifications and, if appropriate, all necessary equipment for conducting the test. If training is required to properly conduct the test, the proposed training program shall be included.

14.3 Response to Request

The Executive Officer shall respond within fifteen (15) days of receipt of a request for approval and indicating that a formal response will be sent within sixty (60) days. If the Executive Officer determines that an adequate evaluation cannot be completed within the allotted time, the Executive Officer shall explain the reason for the delay, and will include the increments of progress such as test protocol review and comment, testing, data review, and final determination. If the request is determined to be incomplete or unacceptable, the Executive Officer shall respond with identification of any deficiencies. The Executive Officer shall issue a determination regarding the alternate procedure within sixty (60) days of receipt of an acceptable request.

14.4 Testing of Alternate Test Procedures

All testing to determine the acceptability of the procedure shall be conducted by ARB staff or by a third party responsible to and under the direction of ARB. Testing shall be conducted in accordance with the written procedures and instructions provided. The testing shall, at a minimum, consist of nine sets of data pairs, pursuant to USEPA Reference Method 301, “Field Validation of Pollutant Measurement Methods from Various Waste Media”, 40 CFR Part 63, Appendix A, 57 Federal Register page 61992. Criteria established in USEPA Reference Method 301 shall be used to determine whether equivalency between the two test methods exists. For situations where Method 301 is not directly applicable, the Executive Officer shall establish equivalence based on the concepts of comparison with the established method and statistical analysis of bias and variance. Method Approval of the procedure shall be granted, on a case-by-case basis, only after all necessary testing has been conducted. Because of the evolving nature of technology and procedures for vapor recovery systems, such approval may or may not be granted in subsequent cases without a new request for approval and additional testing to determine equivalency. If, after approval is granted, subsequent information demonstrates that equivalency between the two methods no longer meets the USEPA Method 301 requirements, the Executive Officer shall revoke the alternate status of the procedure.

14.5 Documentation of Alternate Test Procedures

Any such approvals for alternate test procedures and the evaluation testing results shall be maintained in the Executive Officer's files and shall be made available upon request. Any time an alternate procedure and the reference procedure are both conducted and yield different results, the results determined by the reference procedure shall be considered the true and correct results.

14.6 Inspection Procedures

Inspection procedures are methodologies that are developed to determine compliance based on applicable performance standards or specifications. Inspection procedures are typically, but not necessarily, parametric in nature and possess a built-in factor of safety, usually at least twice the applicable standard or specification. Inspection procedures are not subject to Section 41954(h) of the H&SC.

Upon submittal of an inspection procedure to ARB, the Executive Officer shall respond within thirty (30) days, providing the applicant with a determination of the applicability of Section 41960.2(d) or Section 41960.2(e) of the H&SC.

15. DOCUMENTATION OF CERTIFICATION

Documentation of certification shall be in the form of an Executive Order listing the criteria requirements of installation and operation of a certified system.

15.1 Executive Order

The certification Executive Order shall include the following items.

15.1.1 A list of components certified for use with the system.

15.1.2 Applicable Performance Standards, Performance Specifications and Test Procedures.

15.1.3 Applicable Operating Parameters and Limitations.

15.1.4 Warranty period(s).

15.1.5 Factory testing requirements, if applicable.

15.2 Summary of Certification Process

A summary of the certification process for each certified system shall be prepared. It shall contain documentation of the successful completion of all applicable portions of the requirements contained in this Certification Procedure including but not limited to the following: All problems encountered throughout the certification process, any changes made to address the identified problems, the location of the test station(s), the types of testing performed, the frequency and/or duration of any testing or monitoring, as appropriate, and any other pertinent information about the evaluation process shall be contained in this summary.

16. DURATION AND CONDITIONS OF CERTIFICATION

Vapor recovery system certifications shall specify the duration and conditions of certification.

16.1 Duration of System Certification

Vapor recovery systems shall be certified for a period of four years. The certification Executive Order shall specify the date on which the certification shall expire if it is not renewed as specified in Section 17.

16.2 One Vapor Recovery System per UST System

No more than one certified Phase II vapor recovery system may be installed on each underground storage tank (UST) system unless the Phase II systems have been specifically certified to be used in combination. For facilities with dedicated vapor piping, each underground storage tank and associated dispensing points shall be considered a UST system, and different UST systems may have different vapor recovery systems. For facilities with manifolded vapor piping connecting storage tanks, all the manifolded tanks and associated dispensing points are considered one

UST system, and only one certified Phase II vapor recovery system may be installed in conjunction with that UST system.

16.3 Certification Not Transferable

Upon successful completion of all the requirements, certification shall be issued to the company or individual requesting certification, as the Executive Officer deems appropriate. If the ownership, control or significant assets of the certification holder are changed as the result of a merger, acquisition or any other type of transfer, the expiration date of the certification shall remain unchanged. However, no person shall offer for sale, sell, or install any system or component covered by the certification unless the system or component is recertified under the new ownership, or, in the case of a component, is otherwise certified. Systems installed prior to the transfer shall be subject to the specifications contained in Section 19 of this procedure.

16.4 Financial Responsibility

The adequacy of the (1) methods of distribution, (2) replacement parts program, (3) financial responsibility of the applicant and/or manufacturer, and (4) other factors affecting the economic interests of the system purchaser shall be evaluated by the Executive Officer and determined to be satisfactory to protect the purchaser. A determination of financial responsibility by the Executive Officer shall not be deemed to be a guarantee or endorsement of the manufacturer or applicant.

If no system has yet been certified that meets additional or amended performance standards and specifications, as provided in Section 2.4, the applicant is also requested to provide evidence of the commitment of financial investors for the commercial manufacture of the system, a projected market demand of the system as of the operative date of the standard, a manufacturing plan with scheduled milestones for implementation of the plan, an inventory of equipment ready for shipment and a list of suppliers and subcontractors which are part of the manufacturing plan.

16.5 Warranty

The requirements of this section shall apply with equal stringency both to the original applicant and to re-builders applying for certification. For systems that include components not manufactured by the applicant, the applicant shall provide information that shows that all components meet the following requirements:

16.5.1 The applicant and/or manufacturer of vapor recovery system equipment shall provide a warranty for the vapor recovery system and components, including all hanging hardware, to the initial purchaser and any subsequent purchaser within the warranty period. This warranty shall include the ongoing compliance with all applicable performance standards and specifications. The applicant and/or manufacturer may specify that the warranty is contingent upon the use of trained installers.

16.5.2 The minimum warranty shall be for one year from the date of installation for all systems and components. The applicant may request certification for a warranty period exceeding the minimum one-year requirement.

16.5.3 The manufacturer of any vapor recovery system or component shall include a warranty tag with the certified equipment. The tag shall contain at least the following information:

(a) Notice of warranty period;
(b) Date of manufacture, or where date is located on component;
(c) Shelf life of equipment or sell-by date, if applicable;
(d) A statement that the component was factory tested and met all applicable performance standards and specifications; and
(e) A listing of the performance standards and/or specifications to which it was certified.

16.5.4 The Executive Officer shall certify only those systems which, on the basis of an engineering evaluation of such system's component qualities, design, and test performance, can be expected to comply with such system's certification conditions over the one-year warranty period specified above.

16.6 Installation, Operation and Maintenance of the System.

Systems requiring unreasonable maintenance or inspection/maintenance frequencies, as determined by the Executive Officer, shall not be certified. The manufacturer of any vapor recovery system or component shall be responsible for developing manual(s) for all installation, operation and maintenance procedures and shall be submitted with the application as provided by Section 11.5. This manual(s) shall be reviewed during the certification process and the certification shall not be issued until the Executive Officer has approved the manual(s).

16.6.1 The manual(s) shall include all requirements for the proper installation of the system and/or component. The manual(s) shall include recommended maintenance and inspection procedures and equipment performance procedures, including simple tests the operator can use to verify that the system or component is operating in compliance with all applicable requirements. The Executive Officer may require the inclusion of additional procedures.

16.6.2 No changes shall be made to ARB Approved Manuals without the Executive Officer's prior written approval.

16.7 Identification of System Components

16.7.1 All components for vapor recovery systems shall be permanently identified with the manufacturer's name, part number, and a unique serial number. This requirement does not apply to replacement subparts of the primary component. Specific components may be exempted from this requirement if the Executive Officer determines, in writing, that this is not feasible or appropriate.

16.7.2 Nozzle serial numbers shall be permanently affixed to, or stamped on, the nozzle body and easily accessible for inspection. The location of the serial number shall be evaluated by the Executive Officer prior to certification.

16.8 Revocation of Certifications

The certification of any system determined not to be achieving the applicable performance standards and specifications listed in CP-201 may be revoked. The Executive Officer may conduct testing for the purpose of investigation of or verification of potential system deficiencies.

Revoked systems may remain in use for the remainder of their useful life or for up to four years after the revocation whichever is shorter, provided they comply with all of the requirements of section 19. Systems with revoked certifications shall not be installed on new installations or major modification of existing installations.

17. CERTIFICATION RENEWAL

At least eighteen months prior to the expiration of the certification period, the applicant may request to renew the certification. System certifications shall be renewed without additional testing if no data demonstrating system deficiencies is found or developed prior to the expiration date. During the four-year certification period, system deficiencies shall be identified through periodic equipment audits, complaint investigations, certification or compliance tests, surveys, or other sources of information. If deficiencies are documented, they shall be resolved to the satisfaction of the ARB Executive Officer or the certification shall expire. The ARB Executive Officer may extend certifications, for up to one year, if resolution of system deficiencies appears likely or if additional time is required to gather and evaluate information.

The renewal process, along with the sections of this document that describe them, are outlined below.

(a) Request for Renewal	Section 17.1
(b) Review of the Request	Section 17.2
(c) Evaluation of System Deficiencies	Section 17.3
(d) Letter of Intent	Section 17.4
(e) Renewal of Executive Order	Section 17.5

If no request for renewal is received by the ARB within eighteen (18) months of the certification expiration date, the Executive Officer shall send a “Notice of Pending Expiration” to the holder of the Executive Order. Table 17-1 provides an estimated timeline for the renewal process. The timeline is intended to serve as a guide to provide approximate target schedules for completion of steps in the renewal process.

Each applicant submitting a certification renewal request shall be charged fees not to exceed the actual cost of evaluating and/or testing the system to determine whether it qualifies for renewal. Refer to Section 10 for more information on Fee Payment.

17.1 Request for Renewal

The request for renewal shall be written and signed by an authorized representative, and shall include the items listed below:

17.1.1 The Executive Order Number to be renewed;
17.1.2 Identification of any system or component deficiencies through warranty claims or other information such as;
(a) User feedback
(b) Contractors/Testers
(c) Distributors
17.1.3 Amendments to the Executive Order such as:
(a) Warranty information
(b) Installation, Operations, and Maintenance Manual
(c) System or component drawings
(d) Component modifications
17.1.4 Updates to the training program;
17.1.5 Factory Testing Requirements;
17.1.6 Agency approvals or determinations, if any system modifications have been made since the original approval/determinations (to be submitted prior to approval of EO amendment, see Section 1.1), and
17.1.7 Other information such as the Executive Officer may reasonably require.

17.2 Review Request

The Executive Officer shall review the request and determine if any information provided warrants further evaluation/testing or if amendments to the Executive Order are needed. The applicant will be notified within 60 days of the receipt of the request and whether the submission of additional information is required.

17.3 Evaluation of System Deficiencies

In addition to the information provided in Section 17.1, the Executive Officer shall solicit information on system or component deficiencies through equipment audits, complaint investigations, certification or compliance tests, surveys, VRED data (if applicable), any deficiencies identified by District staff, or other sources of information. The Executive Officer may conduct testing to investigate and/or verify system or component deficiencies. Testing to evaluate component modifications, VRED lists (if applicable), to demonstrate compatibility, or for challenge mode determinations, will be subject to the applicable sections of CP-201. If potential deficiencies are noted, an evaluation will be conducted to determine if:

17.3.1 The deficiency has been or is in the process of being resolved;
17.3.2 System/component modification(s) are necessary;
17.3.3 Executive Order modifications are necessary;
17.3.4 Additional testing is required.

17.4 Letter of Intent

After the review has been completed, a letter of intent will be issued to either 1) renew the Executive Order or 2) allow the Executive Order to expire. Conditions for Expired

Certifications are discussed in Section 19 of this certification procedure. The letter of intent should be issued prior to the Executive Order expiration date but will not be issued prior to completion of the evaluation process described in Sections 17.1, 17.2 and 17.3. If the evaluation process is not complete and the letter of intent is not issued prior to the expiration date then the Executive Officer may determine that installation of the system at new facilities or major modifications will not be allowed during the extension period.

The Executive Officer may allow up to a 1-year extension if:

17.4.1 resolution is likely but renewal time is insufficient; or
17.4.2 additional time is necessary to gather and evaluate information.

17.5 Renewal of Executive Order

Executive Orders approved for renewal shall be valid for a period of four years.

Table 17-1
Estimated Timeline for the Renewal Process

Action	By	Time before Expiration
Submittal of renewal request	Applicant	18 months
Notice of pending expiration (if no renewal request received)	ARB	18 months
Solicitation of system information	ARB	18 months (or at time of receipt of request)
Application review and initial response	ARB	
Renewal request documentation completed	ARB/Applicant	15 months
Submittal of system information for other agency approval/determinations	Applicant	12 months
If testing will be required		
Draft Testing protocol and site identification	ARB/Applicant	14 months
Seal site/start test	ARB	12 months
End testing	ARB	11 to 6 months
Administrative		
Letter of Intent and draft Executive Order	ARB	3 months
Final Executive Order	ARB	0 months

17.6 Denial of Executive Order Renewal

System certifications shall not be renewed if the Executive Officer determines that the performance standards and/or specifications in the Executive Order and CP-201 fail to be met. Non-renewed systems may remain in use for the remainder of their useful life or for up to four years after the expiration date, whichever is shorter, provided the requirements of Section 19 are met.

18. AMENDMENTS TO EXECUTIVE ORDERS

Amendments to Executive Orders may be requested to add alternate or replacement components to a certified system. Alternate or replacement components may be modifications to originally certified components, components originally certified on another system, or new components.

Sections of this document that describe the process to amend an EO are outlined below.

(a) Request for Amendment	Section 18.1
(b) Review of the Request	Section 18.2
(c) Testing	Section 18.3
(d) Letter of Intent	Section 18.4
(e) Issuance of Executive Order	Section 18.5

18.1 Request for Amendment

The request for amendment shall be written and signed by an authorized representative of the applicant, and shall include the items listed below:

18.1.1 Executive Order to be amended;
18.1.2 Description of change;
18.1.3 Changes to the Executive Order such as:
- (a) System or component drawings
- (b) Installation, Operations, and Maintenance Manual
- (c) Fuel and System Compatibility

18.1.4 Agency approvals or determinations (to be submitted prior to approval of EO amendment, see Section 1.1);
18.1.5 Updates to the training program;
18.1.6 Applicable information specified in Section 11 ; and
18.1.7 Other information such as the Executive Officer may reasonably require.

18.2 Review of the Request

Requests for alternate or replacement components, equipment reconfigurations, or software changes will be subjected to an engineering evaluation to determine the level of testing required. The Executive Officer may require full operational testing of at least 180 days, allow abbreviated and/or limited operational testing, or determine that a component modification does not affect the performance of the vapor recovery system and therefore no testing is required.

General criteria to be considered when determining the level of testing are as follows:

(a) extent of physical changes to the component;
(b) extent of material changes to the component;
(c) changes that may affect the durability of the component;
(d) whether performance specifications are the same;
(e) similarity of system designs (i.e. for component transfers); and
(f) information from previous certification testing.

18.2.1 Modified Components

Modified components (i.e., any changes made to vapor recovery components certified as part of a system) may be certified if testing demonstrates that performance standards and specifications will continue to be achieved. The level and duration of operational and/or other testing will be determined by the Executive Officer based on an engineering evaluation.

18.2.2 Transfer of Components from Another Certified System

Components certified with a system may subsequently be considered for use with another certified system of similar design provided that the performance standards and specifications of the components, as specified in the application for the system, are equivalent. Performance standards and specifications, and compatibility, are to be verified by testing and/or engineering evaluation.

Abbreviated/limited operational testing may be considered since the component has previously undergone 180-day/full certification testing as part of another system. Abbreviated tests will only be allowed for components whose performance is not expected to change or degrade over the longer test period.

18.2.3 New Component(s) that have not been Previously Certified on a System.

Components that have not previously been certified with a system, whether for use as an alternate or replacement component, shall be required to undergo operational testing of at least 180 days. Limited operational testing may be considered for such components, if determined to be appropriate by the Executive Officer.

18.2.4 Components that do not affect the performance of the vapor recovery system.

Certification shall not be required for components, either new or modified, determined by the Executive Officer not to affect the performance of the vapor recovery system. The Executive Officer shall notify the applicant in writing of the determination. However, in some cases, such as when a part number changes, an amendment to the Executive Order may be required. An engineering evaluation shall be conducted to document that the change will not affect the performance of the vapor recovery system.

18.2.5 Other Amendments to Executive Orders

(a) System Configurations

Alternative configurations of components of a certified system may be considered for certification based on limited and abbreviated testing. Examples of alternative system configurations include dual fill or remote fill for Phase I and processor placement or vapor piping options for Phase II.

(b) Software Updates

Software revisions of previously certified software components may be considered for certification with limited and/or abbreviated testing. The software change may be approved with no testing if the Executive Officer finds that the software modifications do not affect the vapor recovery system or in-station diagnostic system performance.

18.3 Testing

System or component modifications shall be subjected to sufficient operational, challenge mode, and/or VRED testing to verify the performance and durability of the modified system relative to the certified system that was originally tested.

The level of operational testing to be required is determined as outlined in Section 18.2. Normally, full operational testing of at least 180 days is required. Abbreviated and/or limited operational tests may be allowed in some cases , at the discretion of the Executive Officer. If operational tests are abbreviated, the minimum duration (and gasoline throughput requirement) will be specified by the Executive Officer. The test procedure and test frequency requirements for limited operational tests will be specified by the Executive Officer.

If operational testing is required, then the applicant will choose an appropriate test site meeting the requirements of Section 13.1. The applicant shall submit sufficient information to demonstrate that the requirements of Section 11.8 are met.

18.4 Letter of Intent

A letter shall be sent to the applicant stating the Executive Officer's intent to either issue the amended Executive Order or deny the request.

18.5 Issuance of Executive Order

The original expiration date shall be maintained for all Executive Order amendments unless a renewal, as described in Section 17, is specifically requested and approved.

Previous versions of the Executive Order are superseded, as discussed in Section 19.

19. REPLACEMENT OF COMPONENTS OR PARTS OF A SYSTEM WITH A TERMINATED, REVOKED, SUPERSEDED OR EXPIRED CERTIFICATION

This section applies to systems for which the certification was terminated, revoked, superseded, or has expired. Systems that were installed as of the operative date of a new standard, or that are otherwise subject to Health and Safety Code section 41956.1, may remain in use for the remainder of their useful life or for up to four years after the effective date of the new standard or the date of revocation, whichever is shorter, provided they comply with all of the specifications of this section. Installed systems that have superseded or expired Executive Orders, unless renewed in accordance with Section 17, may remain in use for up to four years after the expiration date of the Executive Order, provided they comply with all of the specifications of Section 19.

19.1 Component and Replacement Parts

Components and replacement parts meeting the currently and prospectively operative performance standards or specifications may be approved for use as a replacement part with the no-longer-certified system for the remainder of the allowable in-use period of the system.

When an approved, compatible component or replacement part that meets the operative standards or specifications is determined to be commercially available, only that component or replacement part shall be installed. Approval shall not require the replacement of already-installed equipment prior to the end of the useful life of that part or component. The approved replacement component shall be considered to be commercially available if that component can be shipped within three weeks of the receipt of an order by the manufacturer of the component.

19.2 Component or Replacement Part Not Meeting Specifications

A component or replacement part not meeting the currently operative performance standards or specifications, but which was certified for use with the system, shall be used as a replacement only if no compatible component or part that meets the new standards or specifications has been approved as a replacement part.

19.3 Component or Part Not Certified with System and Not Meeting Specifications

A component or part that was not certified for use with the system, and that does not meet all of the currently operative standards or specifications, may be approved as a replacement part or component for use on the system provided that there are no other commercially available certified parts meeting the most current performance standards or specifications.

19.4 Procedure for Approval of Replacement Parts

~~Approval of replacement parts shall be requested, evaluated, and granted as follows:~~

19.4.1 A request shall be submitted to the Executive Officer.

19.4.2 The request shall include the information outlined in Section 18.1 and information demonstrating that the component is compatible with the system.

19.4.3 Requests for replacement parts will be subjected to an engineering evaluation to determine the level of testing required. The Executive Officer may require full operational testing of at least 180 days and other certification tests (e.g., VRED or challenge), allow abbreviated and/or limited operational testing, or determine that additional testing is not necessary.

General criteria to be considered when determining the level of testing are as follows:

(a) similarity of system designs;
(b) information from previous certification testing; and
(c) compatibility of the replacement part.

19.4.4 The Executive Officer shall issue an approval letter to authorize the use of the approved replacement part and to detail any modification(s) to the Executive Order for which the part is approved. Requests not granted shall be documented with a disapproval letter.

20. REQUIREMENTS FOR, AND CERTIFICATION OF, LOW PERMEATION HOSES

All hoses which carry liquid fuel against the outermost hose wall shall permeate at a rate of no more than 10.0 grams per square meters per day ($g/m^2/day$) as determined by UL 330 (Seventh Edition) - Underwriters Laboratories' Standard for Hose and Hose Assemblies for Dispensing Flammable Liquids.

The UL 330 testing results shall comprise all of the certification testing for certification as a low permeation hose.

20.1 Request for Certification

If UL 330 testing is not conducted by the Executive Officer, then the Executive Officer shall be made a beneficiary of the data within the contract of the applicant and the testing facility. All data and documentation relevant to determining the permeation rate of the hose, as described in section 15 of UL 330, shall be transmitted to the Executive Officer by the testing facility, concurrently when transmitted to the applicant.

The request for certification shall be written and signed by an authorized representative of the applicant, and shall include the items listed below:

20.1.1 The applicant shall submit evidence that the hose is compatible with all hardware that it will be connected to when in use within the gasoline dispensing system.

20.1.2 The applicant shall provide information regarding the materials specifications of all components, including evidence of compatibility with all fuels in common use in California and approved as specified in Section 3.8. If the applicant is requesting a certification for use only with specified fuel formulations, the applicant shall clearly identify, in the application, the included and excluded fuel formulations for which certification is requested.

20.1.3 The applicant shall state the expected useful life of the hose.

20.1.4 All applications shall include detailed engineering drawings of the hose and hose fittings. These drawing must provide all hose and fitting dimensions, including thicknesses of each individual hose material layer. Further, all hose, fitting and gasket materials must be identified.

20.1.5 Hose installation instructions shall be included with the application.

20.1.6 The applicant shall submit evidence of financial responsibility to ensure adequate protection to the end-user of the product as specified in Section 16.4 and to demonstrate the ability to pay for certification tests and cost.

20.1.7 The applicant shall comply with the warranty requirements of Section 16.5 and shall submit a copy of the warranty for the hose and samples of component tags.

20.1.8 All applications shall include the estimated retail price of the hose.

20.2 Hose Lengths

Once a hose of a particular construction has been determined to comply with the low permeation hose standard per section 20, the Executive Officer shall specify the length of the hose as a condition of certification after considering other applicable performance standards or specifications.

20.3 Identification of Certified Hose

Certified low permeation hoses shall comply with the marking and identification requirements of section 16.7

California Environmental Protection Agency

Air Resources Board

PROPOSED

Vapor Recovery Certification Procedure

CP - 206

Certification Procedure for
Vapor Recovery Systems at
Gasoline Dispensing Facilities Using
Aboveground Storage Tanks

Adopted: May 2, 2008
Amended: [insert amendment date]

Note: The text is shown in ~~strikeout~~ to indicate that it is proposed for deletion and underline to indicate that it is proposed for addition. [Bracketed text] is not part of the proposed amendment.

CP-206
TABLE OF CONTENTS

SECTION **PAGE**

1. GENERAL INFORMATION AND APPLICABILITY 1
1.1 Legislative and Regulatory Requirements of Other State Agencies 1
1.2 Requirement to Comply with All Other Applicable Codes and Regulations 2
1.3 System Certification Matrix 2

2. PERFORMANCE STANDARDS AND SPECIFICATIONS 3
2.1 Performance Standards 4
2.2 Performance Specifications 4
2.3 Innovative System 4
2.4 Additional or Amended Performance Standards or Performance Specifications 4
2.5 Reference to CP-201 6

3. STANDING LOSS CONTROL PERFORMANCE STANDARDS AND SPECIFICATIONS 7
3.1 Standing Loss Control Emission Factor 7
3.2 Optional Standing Loss Control Emission Factor for Existing Installations 8
3.3 Temperature Attenuation Loss Emission Factor 9
3.4 Processor Emission Factor 9
3.5 Temperature Attenuation and Processor Emission Factor 10
3.6 Pressure/Vacuum Vent Valve 10

4. PHASE I PERFORMANCE STANDARDS AND SPECIFICATIONS 122
4.1 Phase I Efficiency / Emission Factor 13
4.2 Static Pressure Performance 13
4.3 Phase I Drop-Tubes with Over-Fill Prevention Devices (Top-Fill Application) 144
4.4 Phase I Product and Vapor Adaptors 14
4.5 Spill Container 155
4.6 Vapor Connections, Fittings, Emergency Vents, Tank Gauges 155
4.7 Materials Compatibility with Fuel Blends 15
4.8 Dedicated Gauging Port ~~with Drop Tube~~ 15
4.9 Compatibility of Phase I System with Standing Loss Control System 16

5. PHASE II PERFORMANCE STANDARDS AND SPECIFICATIONS APPLICABLE TO AST PHASE II VAPOR RECOVERY SYSTEMS 18
5.1 Phase II Emission Factor/Efficiency 20
5.2 Static Pressure Performance 20
5.3 Spillage 21
5.4 Compatibility of Phase II Systems with Vehicles Equipped with ORVR Systems 21
5.5 Compatibility of Phase II Systems with Phase I Systems 22
5.6 Compatibility of Phase II Systems with Standing Loss Control System 22
5.7 Nozzle Criteria 23
5.8 Liquid Retention 23
5.9 Nozzle/Dispenser Compatibility 24
5.10 Unihose Multi-Product Dispenser (MPD) Configuration 23

SECTION **PAGE**

5.11 Coaxial Hose Routing Configurations 24

5.12 Vapor Return Piping 25
5.13 Liquid Condensate Traps 25
5.14 Connections and Fittings 26

6. PHASE II PERFORMANCE STANDARDS AND SPECIFICATIONS APPLICABLE TO BALANCE VAPOR RECOVERY SYSTEMS 30
6.1 Balance Nozzle Criteria 31
6.2 Dynamic Pressure Drop Criteria for Balance Systems 31
6.3 Liquid Removal Systems 31

7. PHASE II PERFORMANCE STANDARDS AND SPECIFICATIONS APPLICABLE TO ALL ASSIST VAPOR RECOVERY SYSTEMS 33
7.1 Nozzle Criteria 33
7.2 Air to Liquid Ratio 34

8. PHASE II PERFORMANCE STANDARDS AND SPECIFICATIONS APPLICABLE TO ASSIST SYSTEMS UTILIZING A CENTRAL VACUUM UNIT 35
8.1 Vacuum Levels Generated by the Collection Device 35
8.2 Maximum Number of Refueling Points per Vacuum Device 35

9. PHASE II PERFORMANCE STANDARDS AND SPECIFICATIONS APPLICABLE TO SYSTEMS UTILIZING A DESTRUCTIVE OR NON-DESTRUCTIVE PROCESSOR 36
9.1 Processor Emission Factors 37
9.2 Hazardous Air Pollutants from Destructive Processors 37
9.3 Maximum Hydrocarbon Emissions from the Processor 37
9.4 Typical Load on the Processor 37
9.5 Processor Operation Time 38

10. IN-STATION DIAGNOSTIC SYSTEMS 38

11. CERTIFICATION OF VAPOR RECOVERY SYSTEMS 38
11.1 Certification Fees 38

12. APPLICATION PROCESS 39
12.1 Description of Vapor Recovery System 41
12.2 Description of In-Station Diagnostics (ISD) 42
12.3 Compatibility 43
12.4 Reliability of the System 43
12.5 Installation, Operation, and Maintenance of the System 44
12.6 Evidence of Financial Responsibility 44
12.7 Warranty 44
12.8 Test Station 44

SECTION **PAGE**

12.9 Notification of Certified System Component Manufacturers ~~Certification Holder.~~..43
12.10 Equipment Defect Identification and Test Protocols 45
12.11 Challenge Modes and Test Protocols.....46
12.12 Number of Installations.....46

12.13 Other Information…….45

13. EVALUATION OF THE APPLICATION..... 47
13.1 Performance Standards and Specifications.....47
13.2 Bench and Operational Testing Results 47
13.3 Evaluation of System Concept 47
13.4 Materials Specifications and Compatibility with Fuel Formulations 47
13.5 Installation, Operation, and Maintenance Manuals.....47
13.6 Vapor Recovery Equipment Defect Identification 47
13.7 Challenge Mode Determination 48
13.8 Number of Configuration Determination…….47

14. VAPOR RECOVERY SYSTEM CERTIFICATION TESTING..... 48
14.1 Test Site for Field Testing of Vapor Recovery Systems 50
14.2 Bench Testing of Components 52
14.3 Operational Test Duration 52
14.4 Equipment Defect and Challenge Mode Testing 52
14.5 Efficiency and/or Emission Factor Test 53
14.6 Vehicle Matrix.....54

15. ALTERNATE TEST PROCEDURES AND INSPECTION PROCEDURES 55
15.1 Alternate Test Procedures for Certification Testing 55
15.2 Request for Approval of Alternate Test Procedure 55
15.3 Response to Request.....55
15.4 Testing of Alternate Test Procedures 56
15.5 Documentation of Alternate Test Procedures.....56
15.6 Inspection Procedures.....56

16. DOCUMENTATION OF CERTIFICATION..... 57
16.1 Executive Order.....57
16.2 Summary of Certification Process 57

17. DURATION AND CONDITIONS OF CERTIFICATION..... 57
17.1 Duration of System Certification 57
17.2 One Vapor Recovery System per AST System 57
17.3 Certification Not Transferable.....58
17.4 Financial Responsibility 58
17.5 Warranty.....58
17.6 Installation, Operation, and Maintenance of the System 59
17.7 Identification of System Components 60

SECTION **PAGE**

17.8 Revocation of Certifications 60

18. CERTIFICATION RENEWAL 60
18.1 Request for Renewal 61
18.2 Review Request 62
18.3 Evaluation of System Deficiencies 62
18.4 Letter of Intent 62
18.5 Renewal of Executive Order 63
18.6 Denial of Executive Order Renewal 63

19. AMENDMENTS TO EXECUTIVE ORDERS 64
19.1 Request for Amendment 64
19.2 Review of the Request 64
19.3 Testing 66
19.4 Letter of Intent 67
19.5 Issuance of Executive Order 67

20. REPLACEMENT OF COMPONENTS OR PARTS OF A SYSTEM WITH A TERMINATED, REVOKED, SUPERSEEDED, OR EXPIRED CERTIFICATION . 67
20.1 Component and Replacement Parts 69
20.2 Component or Part Not Meeting Specifications 69
20.3 Component or Part Not Certified with System and Not Meeting Specifications ... 69
20.4 Procedure for Approval of Replacement Parts 70

21. REQUIREMENTS FOR, AND CERTIFICATION OF, LOW PERMEATION HOSES 70
21.1 Request for Certification 71
21.2 Hose Lengths 71
21.3 Identification of Certified Hose 72

LIST OF TABLES

Table	Title	Page
1-1	Vapor Recovery System Certification Matrix	2
2-1	Effective and Operative Dates for Standing Loss Control, Phase I, and Phase II Performance Standards	3
3-1	Standing Loss Control Performance Standards and Specifications	7
3-2	Standing Loss Control Vapor Recovery System Design Configurations	8
4-1	Phase I Performance Standards and Specifications Applicable to AST Phase I Vapor Recovery Systems	12
5-1	Phase II Performance Standards and Specifications Applicable to AST Phase II Vapor Recovery Systems	18
6-1	Phase II Performance Standards and Specifications Applicable to Phase II Balance Vapor Recovery Systems	30
7-1	Phase II Performance Standards and Specifications Applicable to All Phase II Vacuum Assist Systems	33
8-1	Phase II Performance Standards and Specifications Applicable to All Phase II Assist Systems Utilizing a Central Vacuum Unit	35
9-1	Phase II Performance Standards and Specifications Applicable to All Phase II Assist Systems Utilizing a Destructive Processor	36
9-2	Phase II Performance Standards and Specifications Applicable to All Phase II Assist Systems Utilizing a Non-Destructive Processor	37
12-1	Estimated Timeline for the Certification Application Process	40
18-1	Estimated Timeline for the Renewal Process	63

LIST OF FIGURES

Figure	Title	Page
4A	Phase I Adaptor Cam and Groove Standard	17
4B	Phase I Vapor Recovery Adaptor Cam and Groove Standard	17
5A	Top-Mount Dispenser for Aboveground Tank Phase II Vapor Recovery System	27
5B	End-Mount Dispenser For Aboveground Tank Phase II Vapor Recovery System	28
5C	Tank w/Adjacent Ground-Mount Dispenser and High Hang Hose Phase II Vapor Recovery System	29

California Environmental Protection Agency
Air Resources Board

Vapor Recovery Certification Procedure

CP-206

Certification Procedure for Vapor Recovery Systems At Gasoline Dispensing Facilities Using Aboveground Storage Tanks

A set of definitions common to all certification and test procedures are in:

D-200 Definitions for Vapor Recovery Procedures

For the purpose of this procedure, the term "ARB or CARB" refers to the California Air Resources Board, and the term "Executive Officer" refers to the ARB Executive Officer or his or her authorized representative or designate.

1. GENERAL INFORMATION AND APPLICABILITY

This document describes the procedure for evaluating and certifying Aboveground Storage Tanks (AST), Standing Loss Control, Phase I and Phase II vapor recovery systems, and components, used at Gasoline Dispensing Facilities (GDF). An ARB Executive Order certifying the system shall be issued only after all of the applicable certification requirements have been successfully completed.

This Certification Procedure, CP-206, is adopted pursuant to Section 41954 of the California Health and Safety Code (CH&SC) and is applicable to vapor recovery systems installed at GDFs using an AST for controlling gasoline vapors emitted during diurnal venting (Standing Loss Control), the re-fueling of aboveground storage tanks (Phase I), and the refueling of vehicle fuel tanks (Phase II). Vapor recovery systems are complete systems and components that shall include all associated ASTs, dispensers, piping, nozzles, couplers, processing units, and any other equipment or components necessary for Standing Loss Control or the control of gasoline vapors during Phase I or Phase II refueling operations at GDFs.

Below-grade vaulted tanks shall be certified under Certification Procedure, CP-201, as incorporated by reference in title 17, California Code of Regulations (CCR) section 94011.

1.1 Legislative and Regulatory Requirements of Other State Agencies

As required pursuant to sections 41955 and 41957 of the CH&SC, the Executive Officer shall coordinate this certification procedure with:

1.1.1 Department of Food and Agriculture,
Division of Measurement Standards (DMS)

1.1.2 Department of Forestry and Fire Protection
Office of the State Fire Marshal (SFM)

1.1.3 Department of Industrial Relations, Division of Occupational Safety and Health (DOSH)

Prior to certification of the vapor recovery system by the Executive Officer, the applicant shall submit plans and specifications for the system to each of these agencies. Certification testing by these agencies may be conducted concurrently with ARB certification testing; however, the approval of the SFM, DMS, and DOSH shall be a precondition to certification by ARB. The applicant is responsible for providing documentation of these approvals to ARB.

1.2 Requirement to Comply with All Other Applicable Codes and Regulations

Certification of a system by the Executive Officer does not exempt the system from compliance with other applicable codes and regulations such as state fire codes, weights and measures regulations, safety codes and regulations, and water quality regulations.

1.3 System Certification Matrix

The certification procedure is designed to provide system and component certifications and Executive Orders with options for levels of controls as specified in CP-206 or as requested by the applicant. The varying levels of control can be achieved through combinations of Standing Loss Control, Phase I and Phase II vapor recovery systems, certified independently or together, according to the matrix in Table 1-1. An applicant shall specify the certification matrix to be tested in the application. Compatibility between Standing Loss Control, Phase I, and/or Phase II vapor recovery systems shall be evaluated per Table 1-1.

Table 1-1
Vapor Recovery System Certification Matrix

	Vapor Recovery Systems			**Compatibility**
Standing Loss Control	**Phase I**	**Phase II**	**Low Permeation Hose[1]**	**Section(s)**
X				n/a
X	**X**			4.9 and 12.3
X	**X**	**X**	**X**	4.9, 5.5, 5.6, ~~and~~ 12.3, and 21

[1] May apply to hoses that are not part of a Phase II system

2. PERFORMANCE STANDARDS AND SPECIFICATIONS

Table 2-1
Effective and Operative Dates for Standing Loss Control, Phase I, and Phase II Performance Standards

Performance Type	Requirement	Sec.	Effective Date	Operative Date
Standing Loss Control	As Specified in Table 3-1	3	~~January 1, 2009~~ April 1, 2009	~~January 1, 2009~~ Same as effective date
All Phase I Standards and Specifications	As specified in Table 4-1	4	~~January 1, 2009~~ July 1, 2010	~~January 1, 2009~~ Same as effective date
ORVR Compatibility(1)	As specified in Section 5.4	5.4	~~January 1, 2009~~ Date when first ORVR Compatible System is certified	~~January 1, 2009~~ Same as effective date
Nozzle Criteria	Post Refueling Drips: ≤ 3 drops/refueling	5.7	~~January 1, 2009~~ Date when first nozzle is certified	~~January 1, 2009~~ Same as effective date
Liquid Retention Nozzle Spitting	≤ 100 ml/1,000 gals. dispensed ≤ 1.0 ml/nozzle/~~fueling~~ test	5.8	~~January 1, 2009~~ Date when first nozzle is certified	~~January 1, 2009~~ Same as effective date
Spillage (including drips from spout)	≤ 0.24 pounds/1,000 gals dispensed	5.3	~~January 1, 2009~~ Date when first nozzle is certified	~~January 1, 2009~~ Same as effective date
In-Station Diagnostics (ISD)	For GDF > 600,000gal/yr.(2)	10	~~January 1, 2009~~ Date when first ISD system is certified	~~January 1, 2009~~ Same as effective date
All other Phase II Standards and Specifications	As Specified in Tables 5-1, 6-1, 7-1, 8-1, 9-1, and 9-2	5,6,7,8,9	~~January 1, 2009~~ Date when first Phase II system is certified	~~January 1, 2009~~ Same as effective date
Low Permeation Hoses	Permeation rate ≤ 10.0 g/m^2/day as determined by UL 330	21	Date when the first low permeation hose is certified	Same as effective date

~~(1)~~ Effective January 1, 2001 state law requires the certification of only those systems that are ORVR compatible (Health and Safety Code Section 41954, as amended by Chapter 729, Statutes of 2000; Senate Bill 1300).

(2) GDFs ≤600,000 gal/yr are exempted from ISD requirements.

2.1 Performance Standards

A performance standard defines the minimum performance requirements for certification of any system, including associated components. An applicant may request certification to a performance standard that is more stringent than the minimum performance standard specified in CP-206. Ongoing compliance with all applicable performance standards, including any more stringent standards requested by the applicant, shall be demonstrated throughout certification testing.

2.2 Performance Specifications

A performance specification is an engineering requirement that relates to the proper operation of a specific system or component thereof. In addition to the performance specifications mandated in CP-206, an applicant may specify additional performance specifications for a system or component. An applicant may request certification to a performance specification that is more stringent than the minimum performance specification in CP-206. Ongoing compliance with all applicable performance specifications, including any more stringent specifications requested by the applicant, shall be demonstrated throughout certification testing.

2.3 Innovative System

The innovative system concept provides flexibility in the design of vapor recovery systems. A vapor recovery system that fails to comply with an identified performance standard or specification may qualify for consideration as an innovative system, provided that the system meets the primary emission factor/efficiency, complies with all other applicable requirements of certification, and the Executive Officer determines that the emission benefits of the innovation are greater than the consequences of failing to meet the identified standard or specification.

2.4 Additional or Amended Performance Standards or Performance Specifications

Whenever these Certification Procedures are amended to include additional or amended performance standards, any system that is certified as of the effective date of additional or amended standards shall remain certified until the operative date. Systems installed before the operative date of additional or amended standards may remain in use for the remainder of their useful life or for up to four years after the effective date of the new standard, whichever is shorter, provided the requirements of Section 20 are met.

Whenever these Certification Procedures are amended to include additional or amended performance specifications, a system shall remain certified until the Executive Order expiration date. A system that was installed before the operative date of additional or amended performance specifications may remain in use subject to the requirements of Section 18.

2.4.1 The effective and operative dates of adoption for all performance standards and specifications contained herein are specified in Table 2-1.

2.4.2 The operative dates of performance standards shall be the effective date of adoption of amended or additional performance standards, except as otherwise specified in Table 2-1. Certifications shall terminate on the operative date of amended or additional performance standards unless the Executive Officer determines that the system meets the amended or additional performance standards or specifications. Upon the operative date of the amended or additional performance standards, only systems complying with the amended or additional performance standards may be installed.

2.4.3 The operative dates of performance specifications are listed in Table 2-1. As of the operative date of amended or additional performance specifications, only systems complying with the amended or additional performance specifications may be installed.

2.4.4 When the Executive Officer determines that no Standing Loss Control, Phase I, or Phase II system has been certified or will not be commercially available by the operative dates specified in Table 2-1 of CP-206, the Executive Officer shall extend the operative date and may extend the effective date of amended or additional performance standards or specifications. If there is only one certified system to meet amended or additional standards, that system is considered to be commercially available if that system can be shipped within eight weeks of the receipt of an order by the equipment manufacturer.

2.4.5 **Any performance standard or specification with an effective date of January 1, 2012 or later shall become effective on the date when the first system is certified to meet the performance standard or specification. The Executive Officer shall maintain, and make available to the public, a current list of effective and operative dates for all standards and specifications.**

2.4.5**6** The Executive Officer may determine that a system certified prior to the operative date meets the amended or additional performance standards or specifications. In determining whether a previously certified system conforms to any additional or amended performance standards, specifications or other requirements adopted subsequent to certification of the system, the Executive Officer may consider any appropriate information, including data obtained in the previous certification testing of the system in lieu of new testing.

2.4.6**7** Gasoline Dispensing Facilities in districts that ARB determines are in attainment with the state standard for Ozone are exempted from the Enhanced Vapor Recovery performance standards and specifications set forth in Sections 3 through 10 inclusive, with the exception of the

requirement for compatibility with vehicles that are equipped with Onboard Refueling Vapor Recovery (ORVR) systems as specified in subsections 5.4. New GDFs, and those undergoing major modifications, are not exempt. If exempt facilities become subject to additional standards due to a subsequent reclassification of their district such that the district is no longer in attainment, the facilities will have four years to comply.

2.4.8 Any person can petition the Executive Officer for an engineering evaluation to determine whether the first system certified to meet a standard or specification cannot be installed and/or operated, or is otherwise incompatible with a specific type or subgroup of GDF. The petitioner shall submit the following information to the Executive Officer:

a) The Executive Order and specific EVR component(s) that is claimed to be incompatible,
b) The specific type or subgroup of GDF that is claimed to be incompatible with the specified EVR component(s),
c) A detailed technical explanation of the claimed incompatibility, supported by test data if applicable,
d) An estimate of how many GDFs in California are subject to the claimed incompatibility,
e) An estimate of the cost to modify a typical GDF of the affected type or subgroup so that it would no longer be subject to the claimed incompatibility.
f) Any other information that the Executive Officer deems reasonable and necessary in conducting the engineering evaluation.

The Executive Officer shall conduct an engineering evaluation and if incompatibility is found, the Executive Officer shall issue an executive order stating the incompatibility between the certified system and the GDF type or subgroup which was the subject of the evaluation. In this event, such GDF type or subgroup is not subject to the standard or specification until such date when the first system is certified that is compatible with that GDF type or subgroup. This provision applies to any standard or specification with an effective date on or after January 1, 2012.

2.5 Reference to CP-201

This procedure refers to applicable performance standards and specifications of CP-201, Certification Procedure for Vapor Recovery Systems at Gasoline Dispensing Facilities as incorporated by reference into title 17, CCR section 94011. For the purpose of this procedure the term CP-201 shall mean the last adopted or amended version of CP-201 at the time that an Executive Order under CP-206 is issued.

3. STANDING LOSS CONTROL PERFORMANCE STANDARDS AND SPECIFICATIONS

Table 3-1 summarizes the Standing Loss Control Performance Standards and Specifications applicable to all ASTs that are not below-grade vaulted tanks.

Table 3-1
Standing Loss Control Performance Standards and Specifications

GDF Category	Emission Factor Requirement	Sec.	Std. or Spec.	Test Procedure
New Installations	≤ 0.57 lbs/1000 gallons ullage/day	3.1, 3.2 & 3.3	Std.	TP-206.1 and/or TP-206.2
Existing Installations (Retrofits)	≤ 2.26 lbs/1000 gallons ullage/day	3.1, 3.2 & 3.3	Std.	TP-206.1 and/or TP-206.2

3.1 Standing Loss Control Emission Factor

For new installations the Standing Loss Control Emission Factor shall be 0.57 pounds hydrocarbon per 1000 gallons ullage per day (lbs/1000 gal ullage/day) or less. For existing installations the Standing Loss Control Emission Factor shall be 2.26 lbs/1000 gal ullage/day or less. The applicable emission standard shall be determined for new and existing installations based on the operative and effective dates in Table 2-1. The Standing Loss Control Emission Factor shall be determined from temperature attenuation and/or hydrocarbon emissions as defined in Sections 3.2 and 3.3 of this procedure, respectively.

3.1.1 Standing Loss Control vapor recovery systems shall be certified based on one of the two following approaches:

(a) The performance approach tests all GDF components as a system. After successfully meeting the retrofit or new installation emission factor requirements, these components are certified together as a system.

(b) The design approach tests GDF components independently. After successfully meeting the component specific emission factor requirements from Table 3-2, these components shall be added to a consolidated Executive Order. Mixing and matching of design based components only applies to design based Standing Loss Control vapor recovery components.

(c) The applicant shall specify the certification approach, whether the performance approach or design approach, in the application.

3.1.2 All Standing Loss Control vapor recovery systems shall be tested for a minimum period as defined in Sections 3.3, 3.4, or 3.5 of this procedure. All vapor connections, fittings, emergency vents, and tank gauges required on the tank shall meet the performance standards of Section 4.6 (no leak).

Table 3-2
Standing Loss Control Vapor Recovery System Design Configurations*

Emission Factor	Component(s)			
(lbs/1000 gallon ullage/day)	**Insulation**	**Paint**	**Shade**	**P/V Valve**
0.57	**X**			**X**
2.26		**X**		**X**
2.26			**X**	**X**

***All components in Table 3-2 shall be certified with a pressure/vacuum (P/V) relief valve certified in accordance with Section 3.6 of this procedure.

3.2 Optional Standing Loss Control Emission Factor for Existing Installations

3.2.1 The applicant may request the certification to one of the following optional standing loss control emission factor for existing installations:

0.57 pounds/1000 gallon ullage~~tank volume~~/day or
1.34 pounds/1000 gallon ullage~~tank volume~~/day

3.2.2 If certification is sought for one of the above optional emission factors, the applicant shall make the request in the application and transmittal letter.

3.3 Temperature Attenuation Loss Emission Factor

3.3.1 For control technologies that attenuate fuel surface temperature, the following equation shall be used to determine the standing loss emission factor.

$$EF = EF_{Af}$$

Where:

EF is the standing loss emission factor in pounds/1000 gallons ullage/day

$$EF_{Af} = 3.48 (A_f) - 0.23$$

A_f is determined by TP-206.1, Determination of Emission Factor for Standing Loss Control Vapor Recovery Systems Using Temperature Attenuation at Gasoline Dispensing Facilities with Aboveground Storage Tanks

$EF_{Af} = 0$ when $A_f \leq 0.07$

3.3.2 The minimum certification testing duration shall be 30 consecutive days during the summer months (June 1 to September 30). At least seven of the 30 days shall have a daily peak temperature between 90 ºF to 105 ºF. The Executive Officer may allow testing outside the summer months if the criteria of this section are met.

3.4 Processor Emission Factor

3.4.1 The standing loss emission factor for a processor shall be determined by the following equation:

$$EF = EF_{HC}$$

Where:

EF is the standing loss emission factor in pounds/1000 gallons ullage/day

EF_{HC} is determined by TP-206.2, Determination of Emission Factor for Standing Loss Control Vapor Recovery Systems Using Processors at Gasoline Dispensing Facilities with Aboveground Storage Tanks

3.4.2 The minimum operational test shall be 180 days. Abbreviated testing for certified processor may be allowed as provided by Section 19.

3.5 Temperature Attenuation and Processor Emission Factor

3.5.1 The standing loss emission factor shall be determined by the following equation for a system that employs temperature attenuation technology and processor.

$$EF = EF_{Af} + EF_{HC}$$

EF_{Af} and EF_{HC} are determined by Section 3.3 and TP-206.2, respectively.

3.5.2 The minimum operational test shall be 180 days. Abbreviated testing may be allowed as provided by Section 19.

3.6 Pressure/Vacuum Vent Valve

The Executive Officer shall certify only those vapor recovery systems equipped with a pressure/vacuum (P/V) relief valve(s) on the aboveground storage tank vent pipe(s). Verification of the P/V relief valve pressure settings and leak rate requirements set forth below shall be determined by TP-201.1E CERT (Leak Rate and Cracking Pressure of Pressure/Vacuum Vent Valve).

3.6.1 The pressure settings for the P/V valve shall be:

Positive pressure setting between 2.5 to 6.0 inches H_2O
Negative pressure setting between 6.0 to 10.0 inches H_2O

3.6.2 The total leak rates for P/V valves shall be less than or equal to:

0.17 cubic feet per hour (CFH) at +2.0 inches H_2O
0.63 CFH at -4.0 inches H_2O

3.6.3 The total leak rate of all P/V valves certified for use with any vapor recovery system shall not exceed 0.17 CFH at 2.0 inches H_2O or 0.63 CFH at -4.0 inches H_2O. Applicants may request to certify a system for use with multiple P/V valves by choosing P/V valves certified to more restrictive leak rate performance specifications. The applicant shall state in the certification application the leak rates to which P/V valves are to be certified. All individual valves shall be tested and certified to those stated leak rate specifications.

3.6.4 Certification test sites shall be configured with a minimum of three P/V valves for representativeness, each P/V valve to be configured with an associated ball valve.

3.6.5 The minimum operational test of the P/V valves shall be at least 180 days. Abbreviated testing may be allowed as provided by Section 19.

4. PHASE I PERFORMANCE STANDARDS AND SPECIFICATIONS

Table 4-1 summarizes the Phase I Performance Standards and Specifications applicable to all non-below grade vaulted AST Phase I vapor recovery systems.

Table 4-1
Phase I Performance Standards and Specifications
APPLICABLE TO AST PHASE I VAPOR RECOVERY SYSTEMS

Performance Type	Requirement	Sec.	Std. or Spec.	Test Procedure
Phase I Transfer Efficiency	≥ 98% Efficiency	4.1	Std.	TP-201.1 TP-201.1A
Phase I Transfer Emission Factor	HC ≤ 0.15 pounds/1,000 gallons dispensed	4.1	Std.	TP-201.1A
Static Pressure Performance	In accordance with Section 4.2	4.2	Std.	TP-206.3
Pressure Integrity of Drop-Tube with Overfill Protection	Leak rate ≤ 0.17 CFH at 2.0 inches H_2O	4.3	Std.	TP-201.1D
Phase I Product and Vapor Adaptors	1. Fixed (non-Rotatable), or 2. Rotatable	4.4	Spec.	1. Testing and Eng. Eval. (fixed) 2. TP-201.1B (rotatable)
Phase I Product and Vapor Adaptor Cam and Groove	As Shown in Figure 4A and 4B	4.4	Spec.	Micrometer
Phase I Vapor Adaptor	Poppetted	4.4	Spec.	Testing and Eng. Eval.
Phase I Vapor Adaptor	No Indication of Vapor Leaks	4.4	Std.	LDS or Bagging
Side or Bottom Fill Phase I Adaptor	Poppetted or Close-Coupled Shut-Off Valve	4.4	Spec.	Testing and Eng. Eval.
Side or Bottom Fill Phase I Adaptor	No Indication of Vapor Leaks	4.4	Std.	LDS or Bagging
Spill Container Drain Valve	Leak rate ≤ 0.17 CFH at +2.0 inches H_2O	4.5	Std.	TP-201.1C TP-201.1D
Vapor Connectors and Fittings	No Indication of Vapor Leaks	4.6	Std.	LDS or Bagging

Performance Type	Requirement	Sec.	Std. or Spec.	Test Procedure
Emergency Vent	No Indication of Vapor Leaks	4.6	Std.	LDS or Bagging~~,~~
Compatibility with Fuel Blends	Materials shall be compatible with approved fuel blends	4.7	Spec.	Testing and Eng. Eval.
Dedicated Gauging Port ~~with Drop Tube~~	No Indication of Vapor Leaks	4.8	Std.	Testing and Eng. Eval.
Compatibility of Phase I System with Standing Loss Control System	See Section 4.9	4.9	Spec.	Testing and Eng. Eval.

4.1 Phase I Efficiency / Emission Factor

4.1.1 The minimum volumetric efficiency of Phase I systems shall be 98.0%. This shall be determined in accordance with TP-201.1 (Volumetric Efficiency of Phase I Vapor Recovery Systems).

4.1.2 The hydrocarbon emission factor for systems with processors shall not exceed 0.15 pounds per 1,000 gallons dispensed. This shall be determined in accordance with TP-201.1A (Emission Factor for Phase I Systems at Dispensing Facilities).

4.2 Static Pressure Performance

The static pressure performance of Phase I vapor recovery systems shall be determined in accordance with TP-206.3 (Determination of Static Pressure Performance of Vapor Recovery Systems of Dispensing Facilities with Aboveground Storage Tanks).

4.2.1 All Phase I systems shall be capable of meeting the performance standard in accordance with Equation 4-1.

4.2.2 The minimum allowable final pressure after five-minutes, with an initial pressure of two (2.00) inches H_2O, shall be calculated as follows:

Equation 4-1

$$P_f = 2e^{\frac{-22390}{V}}$$

Where:

P_f = The minimum allowable final pressure after five-minutes, inches H_2O

V = The ullage of the system, gallons

e = A dimensionless constant approximately equal to 2.718

2 = The initial starting pressure, inches H_2O

-223.90 = AST decay constant for a 5 minute test

4.3 Phase I Drop-Tubes with Over-Fill Prevention Devices (Top-Fill Application)

Phase I drop-tubes with over-fill prevention devices installed shall have a leak rate not to exceed 0.17 ~~cubic feet per hour (0.17~~ CFH~~)~~ at a pressure of two inches water column (2.0" H_2O). The leak rate shall be determined in accordance with TP-201.1D (Leak Rate of Drop Tube Overfill Prevention Devices and Spill Container Drain Valves). Drop-tubes that do not have an over-fill protection device shall not leak. Drop tubes and drop tube overfill prevention device certified per CP-201 shall be deemed to meet the requirement of this section.

4.4 Phase I Product and Vapor Adaptors

4.4.1 The vapor and product adaptors shall not leak. The vapor and product adaptors shall be either rotating or non-rotating. Vapor and product adaptors certified per CP-201 shall be deemed to satisfy the requirement of this section.

4.4.2 Phase I product and vapor recovery adaptors shall be manufactured in accordance with the cam and groove specifications shown in Figures 4A and 4B.

4.4.3 Phase I vapor recovery adaptors shall have a poppet. The poppet shall not leak when closed. The absence of vapor leaks may be verified by the use of commercial liquid leak detection solution (LDS), or by bagging when the vapor containment space of the aboveground storage tank is subjected to a non-zero gauge pressure. (Note: leak detection solution (LDS) will detect leaks only when positive gauge pressure exists.)

4.4.4 The side or bottom fill Phase I adaptor shall have a poppet or close-coupled shut-off valve. The poppet or close coupled shut-off valve shall not leak when closed. The absence of vapor leaks may be verified by the use of commercial liquid leak detection solution, or by bagging when the vapor containment space of the aboveground storage tank is subjected to a non-zero gauge pressure. (Note: leak detection solution will detect leaks only when positive gauge pressure exists.).

4.5 Spill Container

4.5.1 Phase I spill container drain valves shall not exceed a leak rate of 0.17 CFH at 2.0 inches H_2O. Spill containers with cover-actuated drain valves shall be tested both with the lid installed and with the lid removed. The leak rate shall be determined in accordance with TP-201.2B (Pressure Integrity of Vapor Recovery Equipment). Phase I configurations installed so that liquid drained through the drain valve drains directly into the drop tube rather that the AST ullage shall be tested in accordance with TP-201.1C (Leak Rate of Drop Tube/Drain Valve Assembly) or TP-201.1D (Leak Rate of Drop Tube Overfill Prevention Device), whichever is applicable. Drain valves certified per CP-201 shall be deemed to satisfy the requirements of this section.

4.5.2 Drain valves shall not be allowed in containment boxes used exclusively for Phase I vapor connections unless required by other applicable regulations.

4.5.3 Spill containers shall be maintained in accordance with all applicable requirements.

4.6 Vapor Connections, Fittings, Emergency Vents, Tank Gauges

All vapor connections, fittings, emergency vent, tank gauges, components, and auxiliary fittings not specifically certified with an allowable leak rate shall not leak. The absence of vapor leaks may be verified by the use of commercial liquid leak detection solution, or by bagging when the vapor containment space of the aboveground storage tank is subjected to a non-zero gauge pressure. (Note: leak detection solution will detect leaks only when positive gauge pressure exists.) The absence of liquid leaks may be verified by visual inspection for seepage or drips.

4.7 Materials Compatibility with Fuel Blends

Vapor recovery systems and components shall be compatible with any and all fuel blends in common use in California, including seasonal changes, and approved for use as specified in title 13, CCR, Section 2260 et seq. Applicants for certification may request limited certification for use with only specified fuel blends. Such fuel-specific certifications shall clearly specify the limits and restrictions of the certification.

4.8 Dedicated Gauging Port ~~with Drop Tube~~

An AST shall include a dedicated gauging port for determining the amount of gasoline. This determination shall be accomplished either manually ~~tank gauging~~ (measuring gasoline levels using a gauging stick), mechanically, or electronically. If the determination is accomplished manually, the ~~The manual gauging~~ port shall have a drop tube which has the discharge opening entirely submerged when the liquid level is ~~6~~ six inches above ~~from~~ the bottom of the

tank. The gauging port shall be permanently identified ~~on the tank~~. The gauging port shall not leak when no manual gauging is occurring or at any time when mechanical or electronic components are used.

4.9 Compatibility of Phase I System with Standing Loss Control System

4.9.1 During a Phase I system certification, any associated certified Standing Loss Control system shall be subject to all of the standards and specifications in Section 3, and tested pursuant to Section 14.

(a) Compatibility of the proposed Phase I system with the certified Standing Loss Control system installed at the certification test site shall be determined by use of all data collected as part of the monitoring described in Section 14. Failure of any Standing Loss Control system tests conducted during the Phase I system certification shall require an explanation from the applicant and a determination by the Executive Officer in regard to the possible cause of the failure. Standing Loss Control system test failures shall not trigger termination of the Phase I system certification test unless sufficient information demonstrates that the Phase I system caused the failure(s).

(b) Repeated component test failures may lead to a determination of incompatibility during the operational test.

(c) After successfully completing the certification testing, the Phase I system shall undergo engineering evaluation to determine compatibility with other certified Standing Loss Control systems. Unless otherwise specified by the applicant, compatibility with all other certified Standing Loss Control systems shall be evaluated by the Executive Officer.

4.9.2 Applicants for certification may as a performance specification, limit the type of equipment with which their system is compatible. Any such specification shall become a condition of certification.

Figure 4A
Phase I Adaptor Cam and Groove Standard

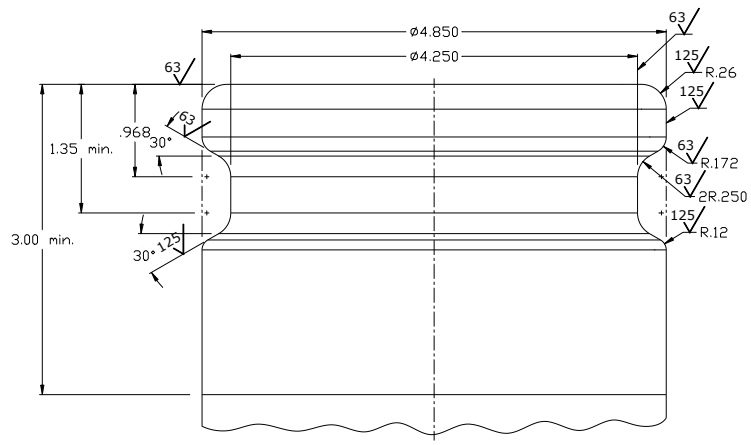

UNLESS OTHERWISE SPECIFIED
DIMENSIONS ARE IN INCHES
TOLERANCES ON DECIMALS
.XXX ± .005
.XX ± .01
ANGLES ± 0.5°

Figure 4B
Phase I Vapor Recovery Adaptor Cam and Groove Standard

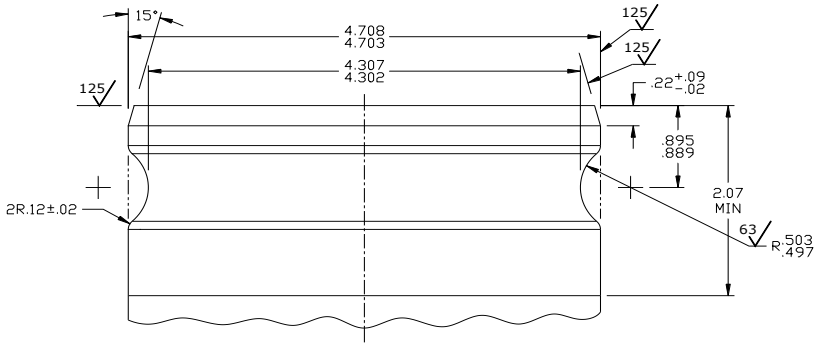

UNLESS OTHERWISE SPECIFIED
DIMENSIONS ARE IN INCHES
TOLERANCES ON DECIMALS
.XXX ± .005
.XX ± .02
ANGLES ± 0.5°

BASED ON
COMMERCIAL ITEM DESCRIPTION
CID A-A-59326
COUPLING HALF, MALE

5. PHASE II PERFORMANCE STANDARDS AND SPECIFICATIONS APPLICABLE TO AST PHASE II VAPOR RECOVERY SYSTEMS

Table 5-1 summarizes the Phase II Performance Standards and Specifications applicable to all non-below grade vaulted AST Phase II vapor recovery systems. Phase II vapor recovery systems shall be certified only in facilities equipped with a certified Phase I system.

Table 5-1
Phase II Performance Standards and Specifications
APPLICABLE TO AST PHASE II VAPOR RECOVERY SYSTEMS

Performance Type	Requirement	Sec.	Std. or Spec.	Test Procedure
Phase II Emission Factor Includes: Refueling and Vent Emissions	Summer Fuel: 95% Efficiency and HC ≤ 0.38 pounds/1,000 gallons dispensed Winter Fuel: 95% Efficiency or HC ≤ 0.38 pounds/1,000 gallons dispensed	5.1	Std.	TP-201.2 TP-201.2A
Static Pressure Performance	In accordance with Section 5.2	5.2	Std.	TP-206.3
Spillage Including Drips from Spout	≤ 0.24 pounds/1,000 gallons	5.3	Std.	TP-201.2C
ORVR Compatibility	~~Refueling ORVR Vehicles Shall Not Cause the System to Exceed the Applicable Efficiency or Emission Std. Including ORVR Penetrations to 80%~~Applicant shall develop a procedure to demonstrate ORVR compatibility when requested by the Executive Officer.	5.4	Std.	Approved Procedure Developed by Applicant
Phase II Compatibility With Phase I Systems	See Section 5.5	5.5	Spec.	Testing and Eng. Eval.
Phase II Compatibility with Standing Loss	See Section 5.6	5.6	Spec.	Testing and Eng. Eval.

Performance Type	Requirement	Sec.	Std. or Spec.	Test Procedure
Control Systems				
Nozzle Criteria Each Phase II Nozzle Shall:	Post-Refueling Drips ≤ 3 Drops/Refueling Comply with dimensions specified in section 5.7.3.~~Terminal End OD ≤ 0.840 inches, for 2.5 inches,~~ Be capable of fueling any vehicle that can be fueled with a conventional nozzle	5.7	Spec.	TP-201.2D Engineering Evaluation
Liquid Retention Nozzle "Spitting"	≤ 100 ml/1,000 gallons ≤ 1.0 ml per nozzle per test	5.8	Std.	TP-201.2E
Nozzle/Dispenser Compatibility	Vapor Valve Closed When Hung Hold-open Latch Disengaged When Hung	5.9	Spec.	Testing and Eng. Eval.
Unihose MPD Configuration	One Hose/Nozzle per Dispenser Side	5.10	Spec.	Testing and Eng. Eval.
Coaxial Hose Routing Configurations	As Shown in Figure 5A, 5B, and 5C	5.11	Spec.	Testing and Eng. Eval.
Low Permeation Hoses	Permeation rate ≤ 10.0 g/m^2/day as determined by UL 330	21	Std.	UL 330 (7th ed)
Phase II Vapor Riser	Minimum 1" Nominal ID	5.12	Spec.	Testing and Eng. Eval.
Vapor Return Piping (Remote Dispensers)	No liquid or fixed blockage Minimum 3" Nominal ID after first manifold Recommended slope 1/4" per foot Minimum slope 1/8" per foot Rigid piping, or equivalent	5.12	Spec.	Testing and Eng. Eval.
Liquid Condensate	Shall have Automatic Evacuation System	5.13	Spec.	Testing and Eng. Eval.

Performance Type	Requirement	Sec.	Std. or Spec.	Test Procedure
Traps				
Connectors and Fittings	No Indication of Vapor Leaks	5.14	Std.	LDS or Bagging

5.1 Phase II Emission Factor/Efficiency

5.1.1 The Hydrocarbon emission factor and/or efficiency for Phase II vapor recovery systems shall be determined as follows:

When testing conducted with gasoline meeting the requirements for summer fuel:

95% Efficiency and Hydrocarbon emission factor not to exceed 0.38 pounds/1,000 gallons dispensed.

When testing conducted with gasoline meeting the requirements for winter fuel:

95% Efficiency or Hydrocarbon emission factor not to exceed 0.38 pounds/1,000 gallons dispensed.

Compliance with t~~T~~he emission factor **and the efficiency standards** shall be demonstrated ~~compliance with the standard~~ when calculated for **a test population consisting of 30 non-ORVR vehicles, selected according to TP-201.2A**. ~~each of these test populations:~~

~~A population of 10 ORVR and 10 non-ORVR vehicles will be used.~~
~~The vehicles defined as "ORVR vehicles" and~~
~~The vehicles defined as "non-ORVR vehicles."~~

~~The efficiency shall demonstrate compliance with the standard when calculated for the vehicles identified as "non-ORVR."~~

5.1.2 The emission factor and/or efficiency shall be determined in accordance with TP-201.2 (Efficiency and Emission Factor for Phase II Systems) and shall include all refueling emissions except for fugitive emissions.

5.2 Static Pressure Performance

The static pressure performance of Phase II systems shall be determined in accordance with TP-206.3 (Determination of Static Pressure Performance of Vapor Recovery Systems of Dispensing Facilities with Aboveground Storage Tanks.) All Phase II vapor recovery systems shall be capable of meeting the performance standard in accordance with Equation 4-2.

5.3 Spillage

The Executive Officer shall not certify vapor recovery systems that cause excessive spillage. Use of a nozzle certified per CP-201 shall be deemed to satisfy the following requirements.

5.3.1 Spillage shall be determined in accordance with TP-201.2C (Spillage from Phase II Systems). The emission factor for spillage shall not exceed 0.24 pounds/1000 gallons dispensed, for each of the following three categories:

(a) All refueling events;
(b) Refueling operations terminated before activation of the primary shutoff; and
(c) Refueling events terminated by activation of the primary shutoff.

5.3.2 The number of self-service refueling operations observed during certification testing of any AST system for spillage shall be not less than:

(a) 50 refueling operations [not including topoffs]; and
(b) 20 fill-ups [terminated by automatic shut-off, not including topoffs].

5.3.3 Increased spillage resulting from one top-off following the first activation of the automatic (primary) shutoff mechanism shall be subjected to challenge mode testing. Nozzles that result in excessive spillage following one top off shall not be certified.

5.4 Compatibility of Phase II Systems with Vehicles Equipped with ORVR Systems

5.4.1 ~~When refueling vehicles equipped with onboard refueling vapor recovery (ORVR) systems, the Phase II system shall meet the criteria as specified in Section 5.1.~~

5.4.2 ~~Compatibility shall be demonstrated for typical and worst case situations and shall demonstrate compatibility with 80% ORVR-equipped vehicle populations. Actual vehicles shall be used whenever feasible. Simulations may be proposed for specific demonstrations. Any ORVR simulation protocols shall be approved by the Executive Officer prior to conducting the test.~~

5.4.3 The ~~system~~ applicant, when requested by the Executive Officer, shall develop ~~be responsible for developing~~ a procedure by which ORVR compatibility can be demonstrated. This procedure is subject to engineering evaluation by the Executive Officer.~~; if it is deemed inadequate and/or unusable, the certification application shall be~~

~~deemed unacceptable.~~

5.5 Compatibility of Phase II Systems with Phase I Systems

5.5.1 Phase II vapor recovery systems shall be certified only in facilities equipped with a certified Phase I system. During a Phase II system certification, the associated Phase I system shall be subject to all of the standards and specifications in Section 4, and tested pursuant to Section 14.

(a) Compatibility of the proposed Phase II system with the certified Phase I system installed at the certification test site shall be determined by use of all data collected as part of the monitoring described in Section 14. Failure of any Phase I system tests conducted during the Phase II system certification shall require an explanation from the applicant and a determination by the Executive Officer in regard to the possible cause of the failure. Phase I system test failures shall not trigger termination of the Phase II system certification unless sufficient information demonstrates that the Phase II system caused the failure(s).

(b) Repeated component test failures may lead to a determination of incompatibility during the operational test.

(c) After successfully completing the certification, the Phase II system shall be evaluated based on engineering evaluation of pressure profiles to determine compatibility with other certified Phase I systems. Unless otherwise specified by the applicant, compatibility with all other certified Phase I systems shall be evaluated by the Executive Officer.

5.5.2 Applicants for certification may, as a performance specification, limit the type of equipment with which their system is compatible. Any such specification shall become a condition of certification.

5.6 Compatibility of Phase II Systems with Standing Loss Control System

5.6.1 During a Phase II system certification, any associated certified Standing Loss Control system shall be subject to all of the standards and specifications in Section 3, and tested pursuant to Section 14.

(a) Compatibility of the proposed Phase II system with the certified Standing Loss Control system installed at the certification test site shall be determined by use of all data collected as part of the monitoring described in Section 14. Failure of any Standing Loss Control system tests conducted during the Phase II system certification shall require an explanation from the applicant and a determination by the Executive Officer in regard to the possible

cause of the failure. Standing Loss Control system test failures shall not trigger termination of the Phase II system certification unless sufficient information demonstrates that the Phase II system caused the failure(s).

(b) Repeated component test failures may lead to a determination of incompatibility during the operational test.

(c) After successfully completing the certification, the Phase II system shall undergo engineering evaluation to determine compatibility with other certified Standing Loss Control systems. Unless otherwise specified by the applicant, compatibility with all other certified Standing Loss Control systems shall be evaluated by ARB.

5.6.2 Applicants for certification may, as a performance specification, limit the type of equipment with which their system is compatible. Any such specification shall become a condition of certification.

5.7 Nozzle Criteria

5.7.1 Each vapor recovery nozzle shall be capable of refueling any vehicle that complies with the fill pipe specifications (title 13, CCR, Section 2235) and can be fueled by a conventional nozzle.

5.7.2 Each vapor recovery nozzle shall be “dripless,” meaning that no more than three drops shall occur following each refueling operation. This shall be determined in accordance with TP-201.2D (Post-Fueling Drips from Nozzles) with the exception that the minimum number of test nozzles be two.

5.7.3 Each vapor recovery nozzle shall comply with the following:

(a) The terminal end shall have a straight section of at least 2.5 inches (6.34 centimeters) in length;
(b) The outside diameter of the terminal end shall not exceed 0.840 inch (2.134 centimeters) for the length of the straight Section; and
(c) The retaining spring or collar shall terminate at least 3.0 inches (7.6 centimeters) from the terminal end.

5.7.4 Additional nozzle criteria are contained in Sections 6 and 7.

5.7.5 Use of a nozzle certified per CP-201 shall be deemed to satisfy the requirements of Section 5.7.

5.8 Liquid Retention

Use of a nozzle certified per CP-201 will satisfy the following criteria:

5.8.1 Liquid retention in the nozzle and vapor path on the atmospheric pressure side of the vapor check valve shall not exceed 100 ml per 1,000 gallons. This shall be determined in accordance with TP-201.2E (Gasoline Liquid Retention in Nozzles and Hoses) with the exception that the minimum number of test nozzles shall be two.

5.8.2 Nozzle "spitting" shall not exceed 1.0 ml per nozzle per test and shall be determined in accordance with TP-201.2E (Gasoline Liquid Retention in Nozzles and Hoses).

5.8.3 The number of self-service refueling operations observed during certification testing of any system for liquid retention and spitting shall be not less than:

- 10 refueling operations (not including topoffs); and
- 4 fill-ups (terminated by automatic shut-off, not including topoffs).

5.9 Nozzle/Dispenser Compatibility

The nozzle and dispenser shall be compatible as follows:

5.9.1 The nozzle and dispenser shall be designed such that the vapor check valve is in the closed position when the nozzle is properly hung on the dispenser.

5.9.2 The nozzle and dispenser shall be designed such that the nozzle cannot be hung on the dispenser with the nozzle valves in the open position.

5.10 Unihose Multi-Product Dispenser (MPD) Configuration

There shall be only one hose and nozzle for dispensing gasoline on each side of a ~~multi-product dispenser (~~MPD~~)~~. This shall not apply to facilities installed prior to January 1, 2009, unless the facility replaces more than 50 percent of the dispensers. Facility modifications that meet the definition of "major modification" for a Phase II system in D-200 trigger the unihose requirement as the facility is considered a "new installation." Exception: dispensers which must be replaced due to damage resulting from an accident or vandalism may be replaced with the previously installed type of dispenser.

5.11 Coaxial Hose Routing Configurations

The routing of coaxial hoses shall be consistent with the configurations outlined in Figure 5A (top-mount dispenser), Figure 5B (end-mount dispenser), and Figure 5C (ground-mounted dispenser with high-hang hose). A liquid removal system is not required if gasoline within the vapor passage of the coaxial hose can be cleared through natural drainage into the vehicle. In

the case of top-mounted, side-mounted, and ground-mounted dispensers, natural drainage will be determined at a distance of 24 inches and a height of 30 inches from the outside plane of the dispenser.

5.12 Vapor Return Piping

The requirements of Sections 5.12.1 through 5.13.2 for the vapor return piping and, if applicable, condensate traps, from the dispenser riser to the aboveground storage tank, shall apply to any facility installed after January 1, 2009.

5.12.1 The vapor return piping from any fueling point to the aboveground storage tank shall be free of liquid or fixed blockage.

5.12.2 The Phase II riser shall have a minimum nominal internal diameter of one inch (1" ID). The connection between the Phase II riser and the dispenser shall be made with materials listed for use with gasoline, and shall have a minimum nominal 1" ID.

5.12.3 For remote dispensers, vapor return piping shall have a minimum nominal internal diameter of three inches (3" ID) from the point of the first manifold to the storage tank. Existing facilities operating prior to January 1, 2009, shall be required to meet the minimum three inch diameter standard only upon facility modifications requiring exposing at least 50 percent of the underground vapor return piping.

5.12.4 Wherever feasible, the recommended minimum downward slope of the vapor return piping, from the remote dispensers to the tank, shall be at least one-fourth (1/4) inch per foot of run. The minimum downward slope, in all cases, shall be at least one-eighth (1/8) inch per foot of run.

5.12.5 The vapor return piping shall be constructed of rigid piping (any piping material with a bend radius that exceeds six feet; the maximum allowable deflection distance is 9 5/8 inches, as determined by TP-201.2G, Bend Radius Determination for Underground Storage Tank Vapor Return Piping), or shall be contained within rigid piping, or shall have an equivalent method, approved by the Executive Officer, to ensure that proper slope is achieved and maintained. (Note: this does not apply to flexible connectors at potential stress points, such as storage tanks, dispensers, and tank vents.) Rigidity shall be determined in accordance with TP-201.2G.

5.12.6 The applicant shall specify the maximum allowable length of vapor return piping of the system and the Executive Officer shall validate by testing and/or engineering evaluation.

5.13 Liquid Condensate Traps

Liquid condensate traps (also known as knockout pots and thief ports) are used to keep the vapor return piping from the remote dispenser to the aboveground storage tank clear of any liquid blockage.

5.13.1 Liquid condensate traps shall be used only when the minimum slope requirements of 1/8 inches per foot of run cannot be met due to the topography.

5.13.2 When condensate traps are installed, they shall be:

(a) certified by ARB;
(b) maintained vapor tight;
(c) accessible for inspection upon request;
(d) capable of automatic evacuation of liquid; and
(e) equipped with an alarm system in case of failure of the evacuation system.

5.14 Connections and Fittings

All connections, fittings, emergency vents, tank gauges, components, and auxiliary fittings not specifically certified with an allowable leak rate shall not leak. The absence of vapor leaks may be verified by the use of commercial liquid leak detection solution, or by bagging when the vapor containment space of the aboveground storage tank is subjected to a non-zero gauge pressure. (Note: leak detection solution will detect leaks only when positive gauge pressure exists.) The absence of liquid leaks may be verified by visual inspection for seepage and drips.

Figure 5A
Top Mount Dispenser for Aboveground Tank with Phase II Vapor Recovery System

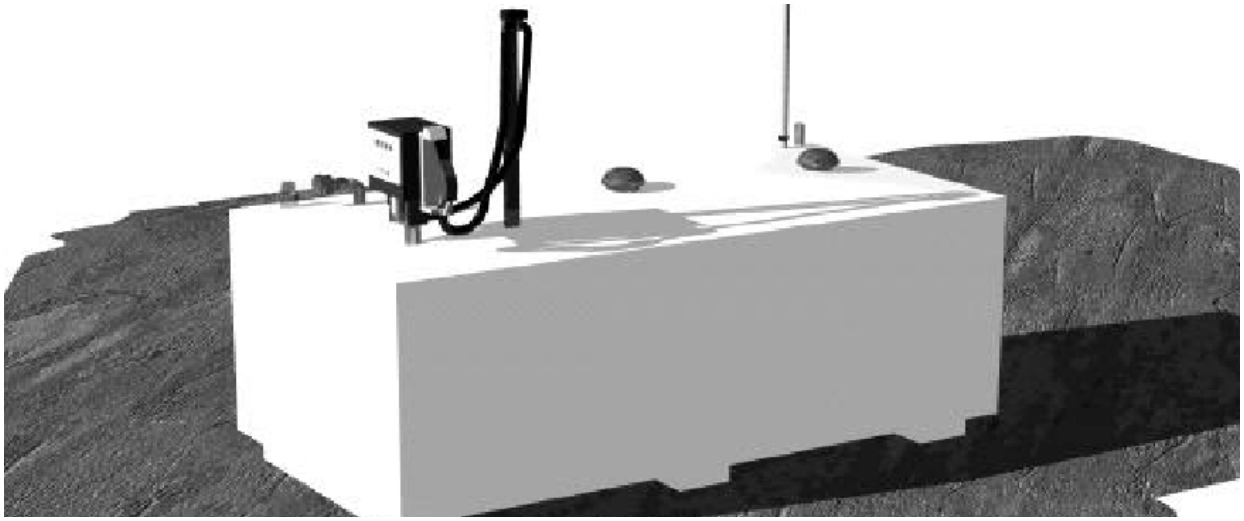

Figure 5B
End-Mount Dispenser for Aboveground Tank with Phase II Vapor Recovery System

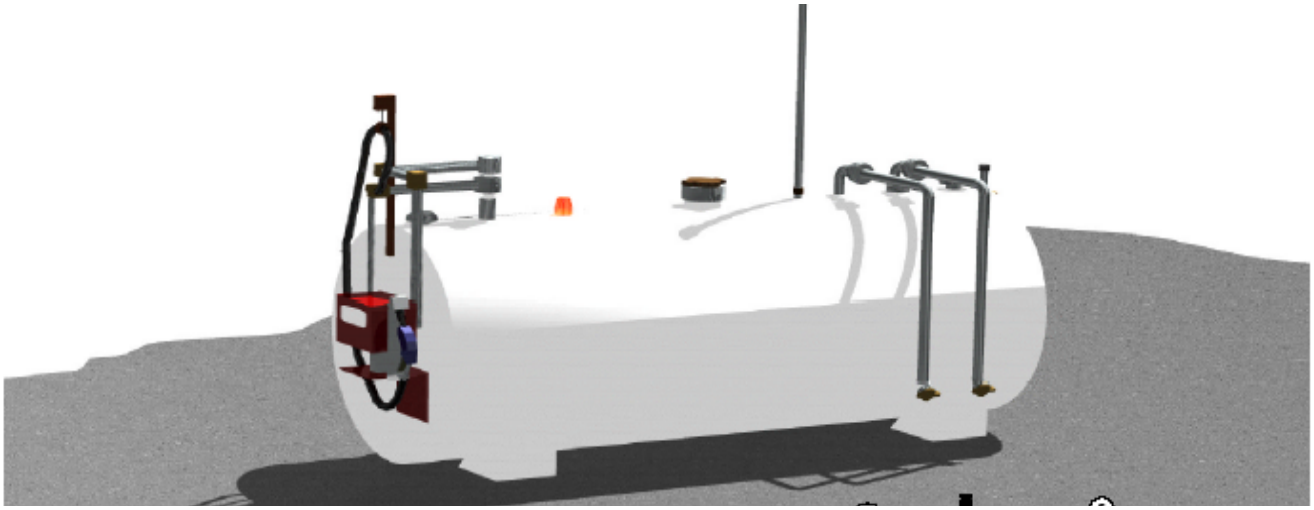

Figure 5C
Tank with Ground-Mount Dispenser and High-Hang Hose for Aboveground Storage Tank with Phase II Vapor Recovery System

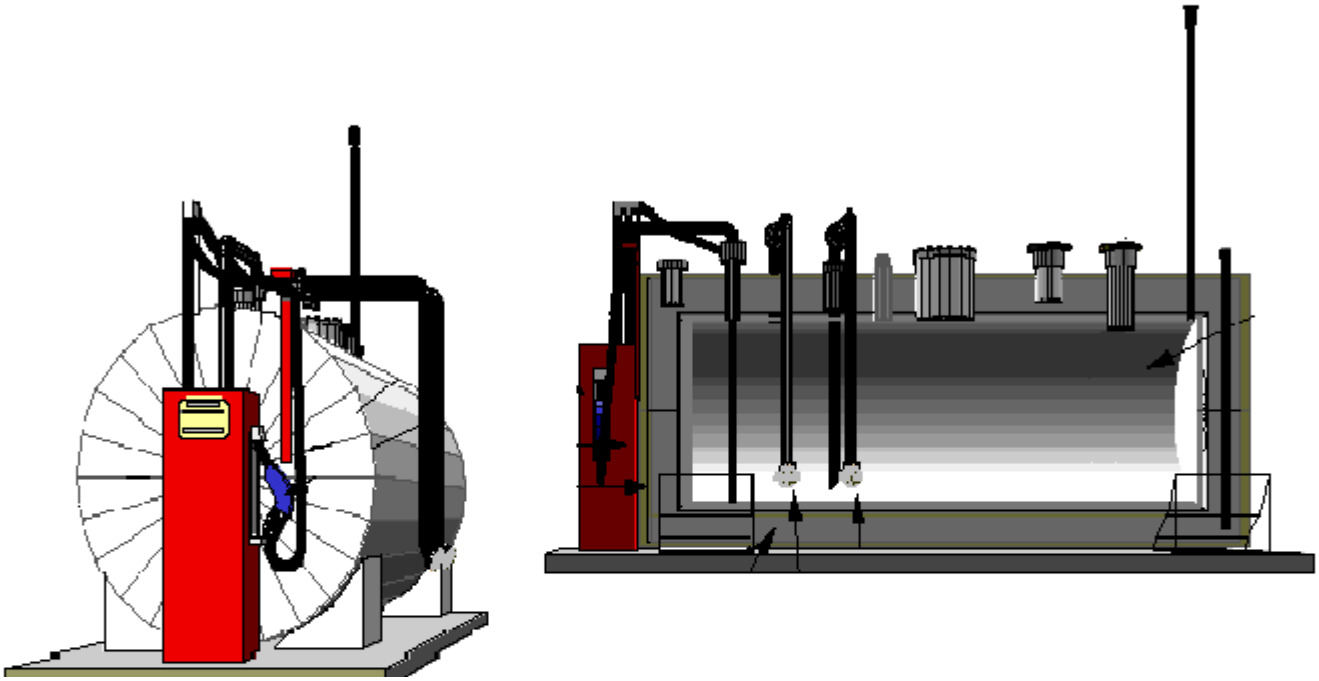

6. PHASE II PERFORMANCE STANDARDS AND SPECIFICATIONS APPLICABLE TO BALANCE VAPOR RECOVERY SYSTEMS

Table 6-1 summarizes the performance standards and specifications specifically applicable to Phase II Balance vapor recovery systems. These systems are also subject to all of the standards and specifications in Sections 3 through 5, and the applicable requirements in Section 9. Nozzles and associated components shall be certified per CP-201 as specified in Section 6.

Table 6-1
Phase II Performance Standards and Specifications
APPLICABLE TO PHASE II BALANCE VAPOR RECOVERY SYSTEMS

Performance Type	Requirement	Sec.	Std. or Spec.	Test Procedure
Nozzle Criteria Each Balance Nozzle Shall:	Have an Insertion Interlock Be Equipped with a Vapor Valve	6.1	Spec.	Testing and Eng. Eval.
Insertion Interlock	Verification of No Liquid Flow Prior to Bellows Compression	6.1	Spec.	Testing and Eng. Eval.
Vapor Check Valve Leak rate	$\leq$ 0.07 CFH at 2.0 inches H_2O	6.1	Spec.	TP-201.2B
Bellows Insertion Force	Pounds (force) to Retaining Device Specified by Applicant and Verified During Certification Testing	6.1	Spec.	Testing and Eng. Eval.
Nozzle Pressure Drop	ΔP at 60 CFH of $N_2 \leq$ 0.08 inches H_2O	6.2	Std.	TP-201.2J
Hose Pressure Drop [Including Whip Hose]	Use Hose Certified per CP-201: ΔP at 60 CFH of $N_2 \leq$ 0.09 inches H_2O	6.2	Std.	TP-201.2J
Breakaway Pressure Drop	ΔP at 60 CFH of $N_2 \leq$ 0.04 inches H_2O	6.2	Std.	TP-201.2J
Dispenser Pressure Drop	ΔP at 60 CFH of $N_2 \leq$ 0.08 inches H_2O	6.2	Std.	TP-201.2J
Swivel Pressure Drop	ΔP at 60 CFH of $N_2 \leq$ 0.01 inches H_2O	6.2	Std.	TP-201.2J
Pressure Drop Phase II Riser to Tank	ΔP at 60 CFH of $N_2 \leq$ 0.05 inches H_2O	6.2	Std.	TP-201.4
Pressure Drop from Nozzle to AST	ΔP at 60 CFH of $N_2 \leq$ 0.35 inches H_2O ΔP at 80 CFH of $N_2 \leq$ 0.62 inches H_2O	6.2	Std.	TP-201.4
Liquid Removal System	Capable of Removing 5 ml/ gal. (average)	6.3	Std.	TP-201.6

6.1 Balance Nozzle Criteria

Nozzles for use with balance systems shall comply with all of the following criteria below.

6.1.1 Each balance nozzle shall have an insertion interlock designed to prevent the dispensing of fuel unless there is an indication that the nozzle is engaged in the fill pipe (i.e., the nozzle bellows is compressed). The performance specifications for the insertion interlock mechanism shall be established during the certification process.

6.1.2 Each balance nozzle shall be equipped with a vapor valve. The leak rate for the vapor valve shall not exceed 0.07 CFH at a pressure of 2.0 inches H_2O as determined by TP-201.2B.

6.1.3 The force necessary to compress the nozzle bellows to the retaining device, or a specified distance, shall be specified by the applicant for certification and verified during certification testing. The applicant shall include a protocol to test the nozzle bellow compression force in the certification application. This procedure is subject to engineering evaluation and approval by the Executive Officer.

6.1.4 Use of a balance nozzle certified per CP-201 shall be deemed to satisfy the requirements of Section 6.1.

6.2 Dynamic Pressure Drop Criteria for Balance Systems

6.2.1 The dynamic pressure drop for balance systems shall be established in accordance with TP-201.4 (Dynamic Pressure). The dynamic pressure drop standards from the tip of the nozzle spout to the aboveground storage tank, with the Phase I vapor poppet open, shall not exceed the following:

0.35 inches H_2O at a flow rate of 60 CFH of Nitrogen; and
0.62 inches H_2O at a flow rate of 80 CFH of Nitrogen.

6.2.2 The dynamic pressure drop for balance system components, measured in accordance with TP-201.2J (Pressure Drop Bench Testing of Vapor Recovery Components) shall not exceed the following.

Nozzle:	0.08 inches H_2O
Hose (Including Whip Hose):	0.09 inches H_2O
Breakaway:	0.04 inches H_2O
Dispenser:	0.08 inches H_2O
Swivel:	0.01 inches H_2O

(a) The dynamic pressure drop for the balance system vapor return line shall not exceed the following as determined by TP-201.4:

Phase II Riser to AST: 0.05 inches H_2O @60 CFH

(b) The addition of other components is acceptable as long as the total is not exceeded. The applicant may request to be certified to a dynamic pressure lower than those specified above. This shall be specified in the application and verified during certification testing.

(c) Use of balance system components certified per CP-201 shall be deemed to satisfy the requirements of Section 6.2.

6.3 Liquid Removal Systems

For those systems requiring liquid removal, the liquid removal rate shall be determined in accordance with TP-201.6 (Determination of Liquid Removal of Phase II Vapor Recovery Systems of Dispensing Facilities). The minimum removal rate, averaged over a minimum of 4 gallons, shall equal or exceed 5 ml per gallon. The minimum dispensing rate for this requirement shall be specified during the certification process. Use of nozzle certified per CP-201 shall be deemed to satisfy the requirements of Section 6.3.

7. PHASE II PERFORMANCE STANDARDS AND SPECIFICATIONS APPLICABLE TO ALL ASSIST VAPOR RECOVERY SYSTEMS

Table 7-1 summarizes the performance standards and specifications specifically applicable to Phase II Assist vapor recovery systems. These systems are also subject to all of the standards and specifications in Sections 3 through 5, and the applicable provisions of Sections 8 or 9.

Table 7-1
Phase II Performance Standards and Specifications
APPLICABLE TO ALL PHASE II VACUUM ASSIST SYSTEMS

Performance Type	Requirement	Sec.	Std. or Spec.	Test Procedure
Nozzle Criteria Each Assist Nozzle Shall:	Possess a Mini-Boot Have an Integral Vapor Valve	7.1	Spec.	Testing and Eng. Eval.
Nozzle Vapor Valve Leak rate	≤ 0.038 CFH at +2.0 inches H_2O ≤ 0.10 CFH at –100 inches H_2O	7.1	Spec.	TP-201.2B
Nozzle Pressure Drop Specifications ΔP at Specified Vacuum Level	Specified by Applicant and Verified During the Certification Process	7.1	Spec.	TP-201.2J
Maximum Air to Liquid Ratio	1.00 (without processor) 1.30 (with processor)	7.2	Std.	TP-201.5
Air to Liquid Ratio Range	Specified by Applicant and Verified During the Certification Process	7.2	Spec.	TP-201.5

7.1 Nozzle Criteria

Nozzles for use with assist systems shall comply with all of the following criteria below.

7.1.1 Each assist nozzle shall be equipped with a mini-boot that both allows for a lower A/L ratio and minimizes the quantity of liquid gasoline exiting the fill pipe during a spitback event.

7.1.2 Each assist nozzle shall be equipped with a vapor valve. The leak rate for the vapor valve shall not exceed the following, as determined by TP-201.2B:

0.038 CFH at a pressure of +2.0 inches H_2O; and
0.10 CFH at a vacuum of –100 inches H_2O.

7.1.3 The nozzle pressure drop shall be specified by the applicant and verified during the certification process using TP-201.2J.

7.1.4 Use of a nozzle certified per CP-201 shall be deemed to satisfy the criteria of Section 7.1.

7.2 Air to Liquid Ratio

The air to liquid (A/L) ratio shall be specified by the applicant and verified during the certification process in accordance with TP-201.5 (Air to Liquid Volume Ratio). The maximum A/L shall not exceed the following:

1.00 (without processor);
1.30 (with processor).

Use of a nozzle certified per CP-201 shall be deemed to satisfy the criteria of Section 7.2.

8. PHASE II PERFORMANCE STANDARDS AND SPECIFICATIONS APPLICABLE TO ASSIST SYSTEMS UTILIZING A CENTRAL VACUUM UNIT

Table 8-1 summarizes the performance standards and specifications specifically applicable to Phase II Assist vapor recovery systems utilizing a Central Vacuum Unit. These systems are also subject to all of the standards and specifications in Sections 3, 4, 5, 7 and, if applicable, Section 9.

Table 8-1
Phase II Performance Standards and Specifications
APPLICABLE TO ALL PHASE II ASSIST SYSTEMS
UTILIZING A CENTRAL VACUUM UNIT

Performance Type	Requirement	Sec.	Std. or Spec.	Test Procedure
Specification of Minimum and Maximum Vacuum Levels	Specified by Applicant and Verified During the Certification Process	8.1	Spec.	Testing and Eng. Eval.
Number of Refueling Points Per Vacuum Device	Specified by Applicant and Verified During the Certification Process; and Challenge Mode Testing	8.2	Spec.	TP-201.5

8.1 Vacuum Levels Generated by the Collection Device

The normal operating range of the system shall be specified by the applicant and verified during the certification process, and the maximum and minimum vacuum levels shall be specified in the certification Executive Order. The applicant may propose challenge mode testing to extend the limits of the operating range.

8.2 Maximum Number of Refueling Points per Vacuum Device

The maximum number of refueling points that can be adequately associated with the vacuum device, including meeting the A/L limits, shall be specified by the applicant and verified during certification testing. The test shall be conducted with all of the refueling points except one using the same fuel grade, and the refueling point on which the effectiveness is being tested using a different fuel grade. An engineering evaluation followed by certification testing shall demonstrate the system's ability to meet the required A/L ratio and/or emission factor with a self-adjusting submersible turbine pump (STP).

9. PHASE II PERFORMANCE STANDARDS AND SPECIFICATIONS APPLICABLE TO SYSTEMS UTILIZING A DESTRUCTIVE OR NON-DESTRUCTIVE PROCESSOR

Tables 9-1 and 9-2 summarize the performance standards and specifications specifically applicable to all Phase II vapor recovery systems utilizing a processor. These systems are also subject to all of the standards and specifications in Sections 3 through 5 and, the applicable provisions of Sections 6, 7, and 8.

Table 9-1
Phase II Performance Standards and Specifications
APPLICABLE TO ALL PHASE II SYSTEMS
UTILIZING A DESTRUCTIVE PROCESSOR

Performance Type	Requirement	Sec.	Std. or Spec.	Test Procedure
Hazardous Air Pollutants (HAPS) from the processor	HAPS from the Processor Shall Not Exceed these Limits: 1,3-Butadiene: 1.2 lbs/year Formaldehyde: 36 lbs/year Acetaldehyde: 84 lbs/year	9.2	Std.	TP-201.2H
Maximum HC Rate from Processor	≤ 5.7 lbs/1,000 gallons (in breakdown mode)	9.3	Spec.	Testing and Eng. Eval.
Typical Load on Processor	Specified by Applicant and Verified during the Certification Process	9.4	Spec.	Testing and Eng. Eval.
Processor Operation Time	Specified by Applicant and Verified during the Certification Process	9.5	Spec.	Testing and Eng. Eval.

Table 9-2
Phase II Performance Standards and Specifications
APPLICABLE TO ALL PHASE II SYSTEMS
UTILIZING A NON-DESTRUCTIVE PROCESSOR

Performance Type	Requirement	Sec.	Std. or Spec.	Test Procedure
Maximum HC Rate from Processor	≤ 5.7 lbs/1,000 gallons (in breakdown mode)	9.3	Spec.	Testing and Eng. Eval.
Typical Load on Processor	Specified by Applicant and Verified during the Certification Process	9.4	Spec.	Testing and Eng. Eval.
Processor Operation Time	Specified by Applicant and Verified during the Certification Process	9.5	Spec.	Testing and Eng. Eval.

9.1 Processor Emission Factors

The processor emission factors shall be established in accordance with TP-201.2 (Efficiency and Emission Factor for Phase II Systems).

9.2 Hazardous Air Pollutants from Destructive Processors

Hazardous Air Pollutants (HAPS) from facilities using processors shall not exceed the following limits:

1,3-Butadiene: 1.2 pounds per year
Formaldehyde: 36 pounds per year
Acetaldehyde: 84 pounds per year

The emission factor shall be established in accordance with TP-201.2H (Determination of Hazardous Air Pollutants from Vapor Recovery Processors).

9.3 Maximum Hydrocarbon Emissions from the Processor

The maximum Hydrocarbon emissions from the processor, in breakdown mode, shall not exceed 5.7 pounds per 1,000 gallons as determined by TP-201.2.

9.4 Typical Load on the Processor

The typical load on the processor shall be identified by the applicant and verified during the certification process, and shall be included in the specifications in the certification Executive Order.

9.5 Processor Operation Time

The typical processor operation time shall be identified by the applicant and verified during the certification process, and shall be included in the specifications in the certification Executive Orders.

10. IN-STATION DIAGNOSTIC SYSTEMS

10.1 Vapor recovery systems at gasoline dispensing facilities that dispense greater than 600,000 gallons per year shall be equipped with an ISD system that meets the requirements of CP-201, Section 9.

11. CERTIFICATION OF VAPOR RECOVERY SYSTEMS

The Executive Officer shall certify only those vapor recovery systems that, based on testing and engineering evaluation of that system's design, component qualities, and performance, are demonstrated to meet all applicable requirements of this certification procedure. Except as provided in Sections 3, 18, and 19, this certification procedure should not be used to certify individual system components. Steps and conditions of the certification process, along with the Sections of this document that describe them, are outlined below.

(a)	Application Process	Section 12
(b)	Evaluation of the Applications	Section 13
(c)	Vapor Recovery System Certification Testing	Section 14
(d)	Alternate Test and Inspection Procedures	Section 15
(e)	Documentation of Certification	Section 16
(f)	Duration and Conditions of Certification	Section 17
(g)	Certification Renewal	Section 18
(h)	Amendments to Executive Orders	Section 19

11.1 Certification Fees

Each applicant submitting a system and/or component for certification shall be charged fees not to exceed the actual cost of evaluating and testing the system to determine whether it qualifies for certification. The applicant is required to demonstrate ability to pay the cost of testing prior to certification and performance testing. Applicants may request a payment plan for testing and certification costs. Requests for a payment plan should be submitted in writing to the Executive Officer and should include the payment frequency (monthly, quarterly, etc.) and amount of each payment to meet the obligation. Failure to fulfill the conditions of payment may result in revocation of the Executive Order.

12. APPLICATION PROCESS

All of the information specified in the following subsections shall be submitted to the Executive Officer for an application to be evaluated. An application for certification of a Standing Loss Control, Phase I, and/or Phase II vapor recovery system or a Standing Loss Control component may be made to the Executive Officer by any applicant.

The applicant for certification shall identify, in the preliminary application, the standard(s) or specification(s) with which the system or component complies, and demonstrate that the proposed system or component meets the primary performance standard(s) or specification(s) required by Sections 3 through 10 of this Procedure. For the preliminary application, the applicant shall have performed tests for all applicable performance specifications and standards. Engineering reports of successful test results for all these tests must be included in the preliminary application. In order to expedite the application process, the Executive Officer may determine that the application is acceptable based on the results of abbreviated operational and/or efficiency/emission factor testing and spillage. Test results shall be submitted for an operational test of at least 30 days, for a test of at least 20 vehicles demonstrating adequate collection, and for at least 50 observations of spillage (including at least 40 percent fills-ups), or equivalent verification that the system is capable of meeting the performance standards and specifications.

The system or component, as characterized by these reports, shall be subjected to an engineering evaluation. If the preliminary application is deemed acceptable, the applicant shall be notified and shall expeditiously install the system or component for certification testing. If the preliminary application is deemed unacceptable, the applicant shall be notified of any deficiencies within 60 days. The final application shall not be deemed complete until it contains the results of all necessary testing, the approvals of other agencies, the finalized operating and maintenance manuals, and all other requirements of certification.

The applicant shall demonstrate, to the satisfaction of the Executive Officer, that the system or component complies with the performance standards under actual field and challenge mode conditions. Such demonstrations shall include the submission of test results with the certification application.

Estimated timelines for evaluation of certification is provided in Table 12-1.

Table 12-1
Estimated Timeline for the Certification Application Process

Action	Time	Determination	ARB Response
Preliminary Application Filed	60 days	Acceptable	Preliminary Application Accepted Test Site Approval Granted
Preliminary Application Filed	60 days	Unacceptable	Preliminary Application Returned with Notification of Deficiencies
Application Resubmitted	30 days	Acceptable	Preliminary Re-Application Accepted Test site Approved
Application Resubmitted	30 days	Unacceptable	Initial Re-Application Returned with Notation of Deficiencies
Final Application Complete	120 days	Acceptable	Executive Officer Issues Certification Executive Order
Final Application Complete	120 days	Unacceptable	Executive Officer Denies Certification

The application shall be written and signed by an authorized representative of the applicant, and shall include all of the items listed below.

(a) Description of Vapor Recovery System or Component (Section 12.1)
(b) Description of In-Station Diagnostics System (Section 12.2)
(c) Materials Compatibility with Fuels (Section 12.3)
(d) Evidence of Compatibility of the System or Component (Section 12.3)
(e) Evidence of Reliability of the System (Section 12.4)
(f) Installation, Operation, and Maintenance Requirements of the System or Component (Section 12.5)
(g) Evidence of Financial Responsibility of the Applicant (Section 12.6)
(h) A copy of the warranty (Section 12.7)
(i) Request for and information about proposed test station (Section 12.8)
(j) Notification of System Certification Holder, if applicable (Section 12.9)
(k) Vapor Recovery Equipment Defects (title 17) and Test Protocols (Section 12.10)
(l) Challenge Modes and Test Procedures (Section 12.11)
(m) Number of configurations (Section 12.12)
(n) If applicable; Bellows Insertion Force Specification and Test Procedure (Section 12.13)
(o) Other Information such as the Executive Officer may reasonably require. (Section 12.13)

12.1 Description of Vapor Recovery System or Component

The application shall include a complete description of the system or component concept, design and operation, including, but not limited to, the following items.

12.1.1 Identification of critical system or component operating parameters. An engineering evaluation of the system or component will be performed by the Executive Officer to evaluate any proposed specifications and to establish additional performance specifications if required.

12.1.2 Engineering drawings of system, components, and aboveground and underground piping and tank configurations for which certification is requested.

12.1.3 Engineering parameters for dispenser vapor system control boards and/or all vapor piping, pumps, nozzles, hanging hardware, vapor processor, etc.

12.1.4 Listing of components and evidence that the manufacturers of any components intended for use with the system and not manufactured by the applicant have been notified of the applicant's intent to obtain certification.

12.1.5 Applicable performance standards and specifications of components, specifically identifying those which exceed the minimum acceptable specifications and for which certification of superior performance is requested, and test results demonstrating compliance with these specifications.

12.1.6 Results of tests demonstrating that the system and components meet all the applicable performance standards. These tests shall be conducted by, or at the expense of, the applicant.

12.1.7 Any additional specifications of the system including, but not limited to, tank size, underground pipe sizes, lengths, fittings, volumes, material(s), etc.

12.1.8 Estimated retail price of the system.

12.1.9 For previously tested systems, identification of any and all new components and physical and operational characteristics, together with new test results obtained by the applicant.

12.2 Description of In-Station Diagnostics (ISD)

The applicant shall include the following documentation with the certification application.

12.2.1 A written description of the functional operation of the GDF vapor recovery ISD system.

12.2.2 A table providing the following information shall be included for each monitored component or system, as applicable:

(a) Corresponding fault code;
(b) Monitoring method or procedure for malfunction detection;
(c) Primary malfunction detection parameter and its type of output signal;
(d) Fault criteria limits used to evaluate output signal of primary parameter;
(e) Other monitored secondary parameters and conditions (in engineering units) necessary for malfunction detection;
(f) Monitoring time length and frequency of checks;
(g) Criteria for storing fault code;
(h) Criteria for notifying station operator; and
(i) Criteria used for determining out of range values and input component rationality checks.

12.2.3 A logic flowchart describing the general method of detecting malfunctions for each monitored emission-related component or system.

12.2.4 A written detailed description of the recommended inspection and maintenance procedures, including inspection intervals that will be provided to the gasoline dispensing facility operator.

12.2.5 A written detailed description of the training plan to train and certify system testers, repairers, installers, and rebuilders.

12.2.6 A written description of the manufacturer's recommended quality control checks.

12.2.7 A written description of calibration and diagnostic checks.

12.2.8 A list of system components that are monitored by the ISD system and test procedures for challenge mode testing. The Executive Officer may modify the list or test procedures based on an engineering evaluation. Additional procedures may be developed as necessary to verify that the system's self-check and self-test features perform accurately.

12.3 Compatibility

The applicant shall submit evidence of system compatibility, including the following:

12.3.1 Evidence of demonstrating compatibility between the Phase I vapor recovery system with any type of Standing Loss Control system with which the applicant wishes the Phase I system to be certified, as specified in Section 4.9

12.3.2 Evidence demonstrating compatibility between the Phase II vapor recovery system and ORVR-equipped vehicles shall be submitted, along with any test results demonstrating compatibility. ORVR compatibility testing shall comply with the provisions in Section 5.4.

12.3.3 Evidence demonstrating the compatibility of the Phase I and Standing Loss Control or Phase II system with any type of Phase I and Standing Loss Control system with which the applicant wishes the Phase II system to be certified, as specified in Sections 4.9 or 5.5 and 5.6. Continuous readings of pressure recordings in the aboveground storage tank, as well as challenge mode tests, may be used for this demonstration.

12.3.4 Evidence that the system can fuel any vehicle meeting state and federal fill pipe specifications and is capable of being fueled by a non-vapor-recovery nozzle.

12.3.5 The applicant shall provide information regarding the materials specifications of all components, including evidence of compatibility with all fuels in common use in California and approved as specified in Section 4.7. If the applicant is requesting a certification for use only with specified fuel formulations, the applicant shall clearly identify, in the application, the included and excluded fuel formulations for which certification is requested.

12.4 Reliability of the System

In order to ensure ongoing compliance, adequately protect public health, and protect the end-user, the reliability of the system shall be addressed in the application, including the following:

12.4.1 The expected life of system and components.

12.4.2 Description of tests conducted to ascertain compliance with performance standards and specifications for the expected life of the system or component, any procedures or mechanisms designed to correct problems, and test results.

12.4.3 Identification of and emission impact of possible failures of system, including component failures

12.4.4 Procedure and criteria for factory testing (integrity, pressure drop, etc.)

12.5 Installation, Operation, and Maintenance of the System

The installation, operation, and maintenance plan shall be submitted, and shall include at least the following items which the Executive Officer shall review and approve prior to implementation:

12.5.1 Installation, operation, and maintenance manuals of the system or component, including the ISD.

12.5.2 A plan for training installers, including a training contact person or contact telephone number, to train for the proper installation of the system.

12.5.3 A replacement parts program.

12.5.4 The estimated installation costs and yearly maintenance costs.

12.6 Evidence of Financial Responsibility

The applicant shall submit evidence of financial responsibility to ensure adequate protection to the end-user of the product as specified in Section 17.4.

12.7 Warranty

The applicant shall submit a copy of the warranty for the system, warranties for each component, and samples of component tags or equivalent method of meeting warranty requirements as specified in Section 17.5.

12.8 Test Station

12.8.1 Standing loss control shall be installed and tested on an AST that does not transfer gasoline. Phase I and Phase I/II vapor recovery systems shall be installed and tested at an operating gasoline dispensing facility for the purpose of certification testing. If the applicant can demonstrate that the vapor recovery system would be subject to the same use at a non-operating GDF as an operating GDF, then the use of a non-operating GDF may be allowed during the certification if approved by the Executive Officer.

12.8.2 The applicant shall make arrangements for the installation of standing loss control on an aboveground storage tank or the vapor recovery system in a gasoline dispensing facility meeting the requirements of Section 14.1.

12.8.3 The request for designation as a test site shall include the following information:

(a) Location of the facility;
(b) Verification of throughput for at least six months; and
(c) Hours of operation.

12.8.4 The applicant shall submit final construction diagrams of the proposed aboveground storage tank or test station. These drawings shall clearly identify the type of vapor recovery piping and connections, pipe slope, and type of storage tanks (i.e., single or double wall, steel, concrete, insulation, fiberglass, etc.). The Executive Officer may require Professional Engineer or Architect Approved As-Built drawings of the test site. If such drawings are not obtainable, the applicant may request the Executive Officer to accept alternatives sources of this information, such as detailed schematics of the vapor piping configuration and/or photographs.

12.9 Notification of Certified System Component Manufacturers ~~Certification Holder~~

If the applicant is not the manufacturer of all system components, the applicant shall include evidence that the applicant has notified all ~~the~~ component manufacturer(s) of the applicant's intended use of the component manufacturers' equipment in the vapor recovery system for which the application is being made.

~~12.9.1 When the applicant is requesting inclusion of one or more components on a certified system, the applicant shall notify the manufacturer, if any, named as the applicant or holder of the executive order for the certified system.~~

~~12.9.2 When the applicant is requesting certification of one or more components as part of a new system, the applicant shall notify all manufacturers.~~

12.10 Equipment Defect Identification and Test Protocols

The application shall identify where failure of system components may result in a vapor recovery equipment defect (VRED) as defined in Section 92006, title 17, CCR. Test protocols shall be developed by the applicant, and submitted with the certification application, along with test results, observations, or other analyses conducted by the applicant, to determine if the component or system failure meets the criteria of a VRED.

12.11 Challenge Modes and Test Protocols

The application shall identify potential challenge modes, as described in Section 13.7. Test protocols shall be developed and submitted by the applicant, and submitted with the certification application, along with test results, observations, or other analyses conducted by the applicant, to determine if the system meets the applicable standards and specifications when tested in challenge mode.

12.12 Number of Configurations

The applicant shall identify the number of configurations (aboveground storage tanks (in terms of capacity (gallon) and area (square feet) including vapor recovery systems, if applicable) for which certification is requested. For certification testing, the applicant shall specify and provide reasons in the application those configurations which represent a worst case scenario from an emission standpoint.

12.13 Other Information

12.13.1 The applicant shall provide any other information that the Executive Officer reasonably deems necessary

12.13.2 For a balance type system, the applicant shall provide a specification for bellows insertion force as specified in Section 6.1. The applicant will include a protocol to test the nozzle bellows compression force in the certification application. This procedure is subject to engineering evaluation and approval by the Executive Officer.

12.13.3 For an assist system, the applicant shall provide specifications for the nozzle pressure drop as specified in Section 7.1 and for the air to liquid ratio as specified in Section 7.2.

12.13.4 For a central vacuum assist system, the applicant shall provide specifications for the minimum and maximum vacuum levels and for the number of refueling points per vacuum device as specified in Sections 8.1 and 8.2, respectively.

12.13.5 For a system with a processor, the applicant shall provide the typical load on the processor and the processor operation time as specified in Sections 9.4 and 9.5, respectively.

13. EVALUATION OF THE APPLICATION

The application for certification of all systems and components shall be subjected to an engineering evaluation by the Executive Officer. The evaluation of the application shall include, but is not limited to, subsections 13.1 through 13.7.

13.1 Performance Standards and Specifications

The system and component performance standards and specifications identified by the applicant shall be reviewed to ensure that they include and conform to the applicable standards and specifications in Sections 3 through 10 of this Procedure.

13.2 Bench and Operational Testing Results

The procedures for, and results of, bench testing and operational testing contained in the application shall be reviewed. The review shall determine if the procedures adhere to required methodology and ensure that the results meet or exceed the standards and specifications in Sections 3 through 10 of this Procedure. The evaluation shall include a determination of necessary verification testing.

13.3 Evaluation of System Concept

The system concept shall be evaluated to ensure that it is consistent with the generally accepted principles of physics, chemistry, and engineering.

13.4 Materials Specifications and Compatibility with Fuel Formulations

The component materials specifications shall be reviewed to ensure chemical compatibility with gasoline and/or any oxygenates that may be present in gasoline on an ongoing or on a seasonal basis, as specified in Section 4.7. This review shall include consideration of the variations in gasoline formulations for octane differences and summer fuel and winter fuel.

13.5 Installation, Operation, and Maintenance Manuals

The installation, operation, and maintenance manuals for the system and components shall be reviewed for completeness (see Section 17.6). Routine maintenance procedures shall be reviewed to ensure adequacy and determine that the procedures are not unreasonable (see Section 17.6).

13.6 Vapor Recovery Equipment Defect Identification

13.6.1 The applicant's VRED test results, test procedure, and test protocol shall be reviewed and subject to an engineering evaluation by the Executive Officer. The engineering evaluation shall identify where the failure of system components shall result in a VRED as defined by Section 94006, title 17, CCR. Test protocols may be developed by the

applicant to determine if the component or system failure meets the criteria of a VRED. These test protocols, upon approval of the Executive Officer, are applied during certification testing as provided in section 14.4.1. The Executive Officer may, for good cause, require modification of, and/or testing in addition to, VRED testing proposed by the applicant.

13.6.2 All VRED mode test procedures, and the results of tests conducted by the applicant, shall be reviewed. Additionally, all VRED mode testing conducted during the certification process to verify the test results or further evaluate the systems shall be similarly reviewed.

13.7 Challenge Mode Determination

The applicant's Challenge Mode test results, test procedure, and test protocol shall be reviewed and subject to an engineering evaluation by the Executive Officer. The engineering evaluation shall determine if the component or system meets the applicable performance standards and specification under challenge mode testing. These test protocols, after engineering evaluation and upon approval of the Executive Officer, are applied during the certification testing as provided in Section 14.4.2. The ARB Executive Officer may, for good cause, require modification of, and/or testing in addition to, challenge mode testing proposed by the applicant.

13.8 Number of Configuration Determination

The Executive Officer shall determine whether the applicant's configuration selection represents a worst case scenario from an emission standpoint. Based on the engineering evaluation, the Executive Officer may concur with the applicant's selection or select additional configurations for certification testing.

14. VAPOR RECOVERY SYSTEM CERTIFICATION TESTING

The Executive Officer shall conduct, or shall contract for and observe, testing of vapor recovery systems for the purpose of certification. Except as otherwise specified in Section 15 of this procedure, vapor recovery systems shall be subjected to evaluation and testing pursuant to the applicable performance standards, performance specifications, and test procedures specified in Sections 3 through 10 of this procedure.

Certification testing of vapor recovery systems shall be conducted only after the preliminary application for certification has been found to be acceptable. Some tests may be conducted more than once, to characterize the performance of complete systems and/or system components over time. Except as otherwise provided in Sections 3, 18, and 19 of this procedure, only complete systems shall be certified.

Failure of any component during testing of a standing loss control (SLC)~~,~~ Phase I, or Phase II system shall be cause for termination of the certification test, except as noted below. Any SLC, Phase I, or Phase II system and/or component test failures must be investigated by the applicant and an explanation provided to the Executive Officer within one week of the test failure discovery. The Executive Officer may extend this one week period for good cause. The Executive Officer may consider information and circumstances presented by the applicant, including previous certification testing, to demonstrate that the failure was attributable to something other than the design of the component and/or system, and may allow further testing without modification.

Any applicant or representative of an applicant found to have performed unauthorized maintenance or to have attempted to conceal of falsify information, including test results and/or equipment failures may be subject to civil and criminal penalties and testing of the system of component shall be terminated.

Phase I

As specified in Section 4.9, Phase I vapor recovery systems shall be certified only in facilities equipped with a certified SLC system. During Phase I system certifications, the associated SLC system shall be subject to all of the standards and specifications in Section 3. Monitoring of SLC system performances shall be conducted for the purpose of demonstrating compatibility, as required by Section 4.9, as well as to insure that SLC systems are functioning properly during the Phase I certification test. Any SLC components identified as not performing correctly shall be replaced and the Phase I system certification continued. However, Phase I system test data collected during any period associated with a SLC system test failure shall be evaluated for validity.

During Phase I system certifications, failure of any SLC components that are determined to be unrelated to the performance of the Phase I system shall not be cause for termination of the Phase I system certification. During Phase I certification test, if any SLC component is identified as having performance deficiencies, then a more thorough investigation of the SLC component/system performance will be initiated by the Executive Officer.

During Phase I system certification, any SLC system and/or component performance deficiencies that are determined to be related to the performance of the Phase I system shall be cause for the termination of the Phase I system certification, as provided by Section 4.9.

Phase II

As specified in Sections 5.5 and 5.6, Phase II vapor recovery systems shall be certified only in facilities equipped with a certified Phase I and SLC systems.

During Phase II system certifications, the associated Phase I and SLC systems shall be subject to all of the standards and specifications in Section 3 and 4. Monitoring of Phase I and SLC system performances shall be conducted for the purpose of demonstrating compatibility, as required by Sections 5.5 and 5.6, as well as to insure that the Phase I and SLC systems are functioning properly during the Phase II certification test. Any Phase I or SLC components identified as not performing correctly shall be replaced and the Phase II system certification continued. However, Phase II system test data collected during any period associated with a Phase I or SLC system test failure shall be evaluated for validity.

During Phase II system certifications, failure of any Phase I or SLC components that are determined to be unrelated to the performance of the Phase II system shall not be cause for termination of the Phase II system certification. During Phase II certification tests, if any Phase I or SLC component is identified as having performance deficiencies, then a more thorough investigation of the Phase I or SLC component/system performance will be initiated by the Executive Officer.

During Phase II system certification, any Phase I or SLC system and/or component performance deficiencies that are determined to be related to the performance of the Phase II system shall be cause for termination of the Phase II system certification, as provided by Sections 5.5 and 5.6.

14.1 Test Site for Field Testing of Vapor Recovery Systems

The applicant shall make arrangements for the appropriate vapor recovery system to be installed on one or more ASTs that do not transfer gasoline for standing loss control certification testing, or on one or more GDFs for Phase I or II system certification testing. The applicant shall request, in writing, approval of the AST or GDF as a test site from the Executive Officer. Upon determining that the GDF meets all of the following criteria, the Executive Officer shall, in writing, designate the selected location as a test site, and exempt it from any state or local district prohibition against the installation of uncertified vapor recovery equipment. This shall not exempt it from the prohibition against the offer for sale, or sale, of uncertified equipment. The vapor recovery system shall be installed throughout the entire facility (note this requirement applies to the primary certification test site). The Executive Officer may require that the system be installed in more than one facility for the purpose of testing.

14.1.1 For the purposes of evaluating Phase I or Phase II vapor recovery system, the test site shall have a minimum monthly gasoline throughput of 1,500 gallons/month, as demonstrated over a consecutive six month period. The throughput data submitted in the application shall be the most current data available. The test site throughput shall also be shown to comply with these criteria for the six months prior to the start of the operational tests.

If the facility is equipped with one hose and nozzle for each gasoline grade, rather than a unihose configuration, the minimum throughput requirement shall apply to the gasoline grade with the highest throughput.

14.1.2 The aboveground storage tank or test station shall be located within 100 miles of the ARB Sacramento offices. When a suitable location for testing cannot be located within 100 miles of the ARB offices, the Executive Officer may, for good cause, grant approval of a test station elsewhere, provided that all the necessary testing can be conducted at that location. The applicant shall be responsible for any additional costs, such as travel, associated with that location.

14.1.3 Continuous access to the aboveground storage tank or test site by ARB staff, without prior notification, shall be provided. Every effort will be made to minimize inconvenience to the owner/operator of the facility. If testing deemed necessary cannot reasonably be conducted, the facility shall be deemed unacceptable and the test shall be terminated.

14.1.4 If test status is terminated for any reason, uncertified equipment shall be removed within sixty (60) days, unless the Executive Officer extends the time in writing. The local district with jurisdiction over the facility may impose a shorter time.

14.1.5 All test data collected by the applicant at the test site shall be made available to the Executive Officer within fifteen (15) working days. Continuous data, such as temperature monitoring data, shall be submitted in bimonthly increments within fifteen (15) days of the last day of the increment. Failure to provide this information may result in extension or termination of the test. The Executive Officer may specify the format in which the data is to be submitted.

14.1.6 Test site designation may be requested by the applicant, or by another person, for facilities other than the certification test site(s), for the purpose of research and development, or independent evaluation of a system prior to its certification. Approval of such a test site shall be at the discretion of the Executive Officer. The test site shall be subject to all of the above conditions with the exception of 14.1.1 and 14.1.2.

14.1.7 For testing conducted pursuant to Sections 19 and 20, SLC or Phase I certification test sites configured with fewer than three P/V valves may be approved by the Executive Officer

14.1.8 Phase II certification test sites will be configured with one to three P/V vent valves, each with an associated ball valve.

14.2 Bench Testing of Components

Components identified by the engineering evaluation as requiring bench testing to verify performance standards and specification shall be submitted to the Executive Officer prior to commencement of operational testing. This testing may be repeated during and/or after the operational testing.

14.3 Operational Test Duration

14.3.1 All vapor recovery systems shall be subjected to an operational test. The duration of the Phase I and Phase II system operational testing shall be at least 180 days, **and for a minimum of 9000 gallons of gasoline throughput,** except as otherwise provided in Section 19. The duration of the SLC system operational test is specified in section 3.2.

14.3.2 No maintenance shall be performed other than that which is specified in the installation, operation, and maintenance manual. Such maintenance as is routine and necessary shall be performed only after approval by the Executive Officer. Occurrences beyond the reasonable control of the applicant, such as vandalism or accidental damage by customers (e.g., drive-offs), shall not be considered cause for failure of the systems.

14.3.3 Except where it would cause a safety problem, maintenance shall not be performed until approval by the Executive Officer has been obtained. In those situations that require immediate action to avoid potential safety problems, maintenance may be performed immediately and the Executive Officer notified as soon as practicable.

14.3.4 For the purpose of SLC system certification, the temperature in the AST and ambient temperature shall be monitored and recorded continuously throughout the operational test in accordance with TP-206.1.

14.3.5 Tests of the performance of the system and/or components shall be conducted periodically throughout the operational test period. If the results of such tests, when extrapolated through the end of the warranty period, show a change that result in the degradation of a performance standard or specification, the Executive Officer may extend or terminate the operational test.

14.4 Equipment Defect and Challenge Mode Testing

14.4.1 Equipment Defect Testing

Testing to determine vapor recovery equipment defects as defined by Section 94006 of title 17, CCR, shall be conducted as part of

certification testing. Vapor recovery equipment defect testing may be allowed during the operational test only when the Executive Officer has determined that the testing does not affect the normal operation of the system.

14.4.2 Challenge Mode Testing

Testing to verify that the system meets the applicable standards under various GDF operating conditions may be conducted as part of certification testing. Challenge mode tests may be allowed during the operational test only when the Executive Officer has determined that the testing does not affect the normal operation of the system.

14.5 Efficiency and/or Emission Factor Test

Testing to determine the efficiency and/or emission factor of the vapor recovery system shall be conducted in accordance with the applicable test procedures specified in Section 3, 4, or 5 of this procedure. Additional testing may be required if the Executive Officer deems it necessary. The additional testing may include, but is not limited to the determination of the Reid Vapor Pressure of the fuel, the volume and/or mass in the vapor return path, fuel and/or tank temperature, and the uncontrolled emission factor.

14.5.1 Standing Loss Systems. A test of the static pressure integrity of the Phase I system shall be conducted, in accordance with TP-206.3, no less than 24 hours or more than seven days prior to conducting TP-206.1 or TP-206.2. The static pressure integrity test shall be conducted not more than 48 hours after the completion of these tests as well. Failure of the static pressure integrity test shall invalidate the TP-206.1 or TP-206.2 test results unless the Executive Officer determines that the integrity failure did not result in any significant unmeasured emissions.

14.5.2 Phase I Systems. A test of the static pressure integrity of the Phase I system shall be conducted, in accordance with TP-206.3, no less than 24 hours or more than seven days prior to conducting TP-201.1 or TP-201.1A. Testing, in accordance with TP-201.1 and/or TP-201.1A, shall be conducted at delivery rates typical and representative of the facilities for which certification is requested. More than one test may be required to accomplish this determination. Certification may be limited to specified maximum loading rates. The static pressure integrity of the vapor recovery system shall be verified as soon as possible, but not more than 48 hours, after the completion of this test. Failure of the static pressure integrity test shall invalidate the TP-201.1 or TP-201.1A test results unless the Executive Officer determines that the integrity failure did not result in any significant unmeasured emissions.

14.5.3 Phase II Systems. A test of the static pressure integrity of the Phase II system shall be conducted, in accordance with TP-206.3, no more than seven days and no less than three days prior to conducting TP-201.2. The static pressure integrity of the vapor recovery system, including all test equipment installed for the purpose of conducting TP-201.2, shall be verified as soon as possible, but not more than 48 hours, after the completion of this test. Failure of the static pressure integrity test shall invalidate the TP-201.2 test unless the Executive Officer determines that the integrity failure did not result in any significant unmeasured emissions.

14.6 Vehicle Matrix

A representative matrix of ~~20~~ **30 non-ORVR** vehicles shall be used when testing to determine the Phase II efficiency for the performance standard. The composition of the representative vehicle matrix shall be determined for each calendar year by the Executive Officer in accordance with TP-201.2A (Determination of Vehicle Matrix for Phase II Systems).

14.6.1 Vehicles will be tested as they enter the dispensing facility ("first in" basis) until a specific matrix block of the distribution is filled.

~~14.6.2 The vehicle matrix shall include a population of ORVR-equipped vehicles consistent with the distribution of ORVR-equipped vehicles in the State of California.~~

14.6.~~3~~**2** The Executive Officer may exclude any vehicle that fails to comply with the vehicle fill pipe specifications ("Specifications for Fill Pipes and Openings of Motor Vehicle Fuel Tanks" incorporated by reference in title 13, CCR, Section 2235).

14.6.~~4~~**3** The Executive Officer may exclude a vehicle prior to its dispensing episode only if such exclusion and its reason is documented; e.g. unusual facility conditions beyond the applicant's control or unusual modifications to the vehicle. All data required by the test procedure shall be taken for such vehicles for subsequent review and possible reversal of the exclusion decision made during the test. The only other reasons for excluding a vehicle from the test fleet are incomplete data or the factors in TP-201.2.

14.6.~~5~~**4** Additional vehicles may be chosen for testing at the test site by the Executive Officer. The vehicles shall be chosen, according to the Executive Officer's judgment, so that any of the first ~~20~~ **30 non-ORVR** vehicles, which may later be found to have invalid data associated with them, shall have replacements from among the additional vehicles on a "first in" basis.

14.6.~~6~~**5** A matrix of fewer than ~~20~~ **30 non-ORVR** ~~(10 ORVR and 10 non-ORVR)~~ vehicles may be made by deleting up to a maximum of two vehicles ~~(one ORVR and one non-ORVR)~~ by reducing the representation in any cell or combination of cells of the vehicle matrix, subject to the following requirements for each candidate reduced cell.

(a) No cell shall be reduced by more than one vehicle
(b) At least one dispensing episode has already been tested in each cell.
(c) None of the other dispensing episodes in the cell have yielded field data which, in the Executive Officer's judgment, would cause a failure to meet the standards specified in Section 5.1.
(d) All tested dispensing episodes in all cells have yielded field data that, in the Executive Officer's judgment, would yield valid test results after subsequent review and evaluation.

15. ALTERNATE TEST PROCEDURES AND INSPECTION PROCEDURES

Test procedures other than those specified in this certification procedure shall be used only if prior written approval is obtained from the Executive Officer. A test procedure is a methodology used to determine, with a high degree of accuracy, precision, and reproducibility, the value of a specified parameter. Once the test procedure is conducted, the results are compared to the applicable performance standard to determine the compliance status of the facility. Test procedures are subject to the provisions of Section 41954(h) of the H&SC.

15.1 Alternate Test Procedures for Certification Testing

The Executive Officer shall approve, as required, those procedures necessary to verify the proper performance of the system.

15.2 Request for Approval of Alternate Test Procedure

Any person may request approval of an alternative test procedure. The request shall include the proposed test procedure, including equipment specifications and, if appropriate, all necessary equipment for conducting the test. If training is required to properly conduct the test, the proposed training program shall be included.

15.3 Response to Request

The Executive Officer shall respond within fifteen (15) days of receipt of a request for approval and indicating that a formal response will be sent within sixty (60) days. If the Executive Officer determines that an adequate evaluation cannot be completed within the allotted time, the Executive Officer shall explain the reason for the delay, and will include the increments of progress such as test protocol review and comment, testing, data review, and final determination. If the request is determined to be incomplete or

unacceptable, Executive Officer shall respond with identification of any deficiencies. The Executive Officer shall issue a determination regarding the alternate procedure within sixty (60) days of receipt of an acceptable request.

15.4 Testing of Alternate Test Procedures

All testing to determine the acceptability of the procedure shall be conducted by ARB staff, or by a third party responsible to and under the direction of ARB. Testing shall be conducted in accordance with the written procedures and instructions provided. The testing shall, at a minimum, consist of nine sets of data pairs, pursuant to USEPA Reference Method 301, “Field Validation of Pollutant Measurement Methods from Various Waste Media”, 40 CFR Part 63, Appendix A, (December 29, 1992). Criteria established in USEPA Reference Method 301 shall be used to determine whether equivalency between the two test methods exists. For situations where method 301 is not directly applicable, the Executive Officer shall establish equivalence based on the concepts of comparison with the established method and statistical analysis of bias and variance. Method Approval of the procedure shall be granted, on a case-by-case basis, only after all necessary testing has been conducted. Because of the evolving nature of technology and procedures for vapor recovery systems, such approval may or may not be granted in subsequent cases without a new request for approval and additional testing to determine equivalency. If, after approval is granted, subsequent information demonstrates that equivalency between the two methods no longer meets the USEPA Method 301 requirements, the Executive Officer shall revoke the alternate status of the procedure.

15.5 Documentation of Alternate Test Procedures

Any such approvals for alternate test procedures and the evaluation testing results shall be maintained in the Executive Officer's files and shall be made available upon request. Any time an alternate procedure and the reference procedure are both conducted and yield different results, the results determined by the reference procedure shall be considered the true and correct results.

15.6 Inspection Procedures

Inspection procedures are methodologies that are developed to determine compliance based on applicable performance standards or specifications. Inspection procedures are typically, but not necessarily, parametric in nature and possess a built-in factor of safety, usually at least twice the applicable standard or specification. Inspection procedures are not subject to Section 41954(h) of the H&SC.

Upon submittal of an inspection procedure to CARB, the Executive Officer shall respond within thirty (30) days, providing the applicant with a

determination of the applicability of Section 41960.2(d) or Section 41960.2(e) of the H&SC.

16. DOCUMENTATION OF CERTIFICATION

Documentation of certification shall be in the form of an Executive Order listing the criteria requirements of installation and operation of a certified system.

16.1 Executive Order

The certification Executive Order shall include the following items:

16.1.1 A list of components certified for use with the system.
16.1.2 Applicable Performance Standards, Performance Specifications and Test Procedures.
16.1.3 Applicable Operating Parameters and Limitations.
16.1.4 Warranty period(s).
16.1.5 Factory testing requirements, if applicable.

16.2 Summary of Certification Process

A summary of the certification process for each certified system shall be prepared. It shall contain documentation of the successful completion of all applicable portions of the requirements contained in this Certification Procedure. In addition, all problems encountered throughout the certification process, any changes made to address the identified problems, the location of the test station(s), the types of testing performed, the frequency and/or duration of any testing or monitoring, as appropriate, and any other pertinent information about the evaluation process shall be contained in this summary.

17. DURATION AND CONDITIONS OF CERTIFICATION

Vapor recovery system certifications shall specify the duration and conditions of certification.

17.1 Duration of System Certification

Vapor recovery systems shall be certified for a period of four years. The certification Executive Order shall specify the date on which the certification shall expire if it is not renewed as specified in Section 18.

17.2 One Vapor Recovery System per AST System

No more than one certified Phase II vapor recovery system may be installed on each aboveground storage tank (AST) system unless the Phase II system has been specifically certified to be used in combination. For facilities with dedicated vapor piping, each aboveground storage tank and associated

dispensing points shall be considered an AST system, and different AST systems may have different vapor recovery systems. For facilities with manifolded vapor piping connecting storage tanks, all the manifolded tanks and associated dispensing points are considered one AST system, and only one certified Phase II vapor recovery system may be installed in conjunction with that AST system.

17.3 Certification Not Transferable

Upon successful completion of all the requirements, certification shall be issued to the company or individual requesting certification, as the Executive Officer deems appropriate. If the ownership, control or significant assets of the certification holder are changed as the result of a merger, acquisition or any other type of transfer, the expiration date of the certification shall remain unchanged. However, no person shall offer for sale, sell, or install any system or component covered by the certification unless the system or component is recertified under the new ownership, or, in the case of a component, is otherwise certified. Systems installed prior to the transfer shall be subject to the specifications contained in Section 20 of this procedure.

17.4 Financial Responsibility

The adequacy of the (1) methods of distribution, (2) replacement parts program, (3) financial responsibility of applicant and/or manufacturer, and (4) other factors affecting the economic interests of the system purchaser shall be evaluated by the Executive Officer and determined to be satisfactory to protect the purchaser. A determination of financial responsibility by the Executive Officer shall not be deemed to be a guarantee or endorsement of the manufacturer or applicant.

If no system has yet been certified that meets additional or amended performance standards and specifications, as provided in Section 2.4, the applicant is also requested to provide evidence of the commitment of financial investors for the commercial manufacture of the system, a projected market demand of the system as milestones for implementation of the plan, an inventory of equipment ready for shipment and a list of suppliers and subcontractors which are part of the manufacturing plan.

17.5 Warranty

The requirements of this shall apply with equal stringency both to the original applicant and to re-builders applying for certification. For systems that include components not manufactured by the applicant, the applicant shall provide information that shows that all components meet the following requirements:

17.5.1 The applicant and/or manufacturer of the vapor recovery system equipment shall provide a warranty for the vapor recovery system and

components, including all hanging hardware, to the initial purchaser and any subsequent purchaser within the warranty period. This warranty shall include the ongoing compliance with all applicable performance standards and specifications. The applicant and/or the manufacturer may specify that the warranty is contingent upon the use of trained installers.

17.5.2 The minimum warranty shall be for one year from the date of installation for all systems and components. The applicant may request certification for a warranty period exceeding the minimum one-year requirement.

17.5.3 The manufacturer of any vapor recovery system or component shall include a warranty tag with the certified equipment. The tag shall contain at least the following information:

(a) Notice of warranty period;
(b) Date of manufacture, or where date is located on component
(c) Shelf life of equipment or sell-by date, if applicable;
(d) A statement that the component was factory tested and met all applicable performance standards and specifications; and
(e) A listing of the performance standards and/or specifications to which it was certified.

17.5.4 The Executive Officer shall certify only those systems which, on the basis of an engineering evaluation of such system's component qualities, design, and test performance, can be expected to comply with such system's certification conditions over the one-year warranty period specified above.

17.6 Installation, Operation, and Maintenance of the System

Systems requiring unreasonable maintenance or inspection/maintenance frequencies, as determined by the Executive Officer, shall not be certified. The manufacturer of any vapor recovery system or component shall submit manual(s) for all installation, operation, and maintenance procedures with the application as provided by Section 12.5. This manual(s) shall be reviewed during the certification process and the certification shall not be issued until the Executive Officer has approved the manual(s).

17.6.1 The manual(s) shall include all requirements for the proper installation of the system and/or component. The manual(s) shall include recommended maintenance and inspection procedures and equipment performance procedures, including simple tests the operator can use to verify that the system or component is operating in compliance with all applicable requirements. The Executive Officer may require the inclusion of additional procedures.

17.6.2 No changes shall be made to ARB Approved Manuals without the Executive Officer's prior written approval.

17.7 Identification of System Components

17.7.1 All components for vapor recovery systems shall be permanently identified with the manufacturer's name, part number, and, if applicable, a unique serial number. This requirement does not apply to replacement subparts of the primary component. Specific components may be exempted from this requirement if the Executive Officer determines, in writing, that this is not feasible or appropriate.

17.7.2 Nozzle serial numbers shall be permanently affixed to, or stamped on, the nozzle body and easily accessible for inspection. The location of the serial number shall be evaluated and approved by the Executive Officer prior to certification.

17.8 Revocation of Certifications

The certification of any system determined not to be achieving the applicable performance standards and specification listed in CP-206 may be revoked. The Executive Officer may conduct testing for the purpose of investigation of or verification of potential system deficiencies

Revoked systems may remain in use for the remainder of their useful life or for up to four years after the revocation, whichever is shorter, provided they comply with all of the requirements of Section 20. Systems with revoked certifications shall not be installed on new installations or major modifications of existing installations.

18. CERTIFICATION RENEWAL

At least eighteen (18) months prior to expiration of the certification period, the applicant may request to renew the certification. System certifications shall be renewed without additional testing if no data demonstrating system deficiencies is found or developed prior to the expiration date. During the four-year certification period, system deficiencies shall be identified through periodic equipment audits, complaint investigations, certification or compliance tests, surveys, or other sources of information. If deficiencies are documented, they shall be resolved to the satisfaction of the ARB Executive Officer or the certification shall expire. The ARB Executive Officer may extend certification if resolution of system deficiencies appears likely or if additional time is required to gather and evaluate information.

The renewal process, along with the sections of this document that describe them, are outlined below.

(a) Request for Renewal	Section 18.1
(b) Review of the Request	Section 18.2
(c) Evaluation of System Deficiencies	Section 18.3

(d) Letter of Intent	Section 18.4
(e) Renewal of Executive Order	Section 18.5
(f) Denial of Executive Officer Approval	Section 18.6

If no request for renewal is received by the ARB within eighteen (18) months of the certification expiration date, the Executive Officer shall send a “Notice of Pending Expiration” to the holder of the Executive Order. Table18-1 provides an estimated timeline for the renewal process. The timeline is intended to serve as a guide to provide approximate target schedules for completion of steps in the renewal process.

Each applicant submitting a certification renewal request shall be charged fees not to exceed the actual cost of evaluating and/or testing the system to determine whether it qualifies for renewal. Refer to Section 11.1 for more information on Fee Payment.

18.1 Request for Renewal

The request for renewal shall be written and signed by an authorized representative, and shall include the items listed below:

18.1.1 The Executive Order Number to be renewed;

18.1.2 Identification of any system or component deficiencies through warranty claims or other information such as:
(a) User feedback
(b) Contractor/Tester
(c) Distributors

18.1.3 Amendments to the Executive Order such as:
(a) Warranty information
(b) Installation, Operation, and Maintenance Manual
(c) System or component drawings
(d) Component modification

18.1.4 Updates to the training program;

18.1.5 Factory Testing Requirements;

18.1.6 Agency approvals or determinations, if any system modifications have been made since the original approval/determinations (to be submitted prior to approval of EO amendment, see Section 1.1), and

18.1.7 Other information such as the Executive Officer may reasonably require.

18.2 Review Request

The Executive Officer shall review the request and determine if any information provided warrants further evaluation/testing or if amendments to the Executive Order are needed. The applicant will be notified within 60 days of the receipt of the request and whether the submission of additional information is required.

18.3 Evaluation of System Deficiencies

In addition to the information provided in Section 18.1, the Executive Officer shall solicit information on system or component deficiencies through equipment audits, complaint investigations, certification or compliance tests, surveys, VRED data (if applicable), and any deficiencies identified by District staff, or other sources of information. The Executive Officer may conduct testing to investigate and/or verify system or component deficiencies. Testing to evaluate component modifications, VRED lists (if applicable), to demonstrate compatibility, or for challenge mode determinations, will be subject to the applicable sections of CP-206. If potential deficiencies are noted, an evaluation will be conducted to determine if:

18.3.1 The deficiency has been or is in the process of being resolved;

18.3.2 System/component modification(s) are necessary;

18.3.3 Executive Order modifications are necessary;

18.3.4 Additional testing is required.

18.4 Letter of Intent

After the review has been completed, a letter of intent will be issued to either (1) renew the Executive Order or (2) allow the Executive Order to expire. Conditions for expired certifications are discussed in Section 19 of this certification procedure. The letter of intent should be issued prior to the Executive Order expiration date but will not be issued prior to completion of the evaluation process described in Sections 18.1, 18.2, and 18.3. If the evaluation process is not complete and the letter of intent is not issued prior to the expiration date then the Executive Officer may determine that installation of the system at new facilities or major modifications will not be allowed during the extension period.

The Executive Officer may allow a certification extension if:

18.4.1 Resolution is likely but renewal time is insufficient; or

18.4.2 Additional time is necessary to gather and evaluate information.

18.5 Renewal of Executive Order

Executive Orders approved for renewal shall be valid for a period of four (4) years.

18.6 Denial of Executive Order Renewal

System certifications shall not be renewed if the Executive Officer determines that the performance standards and/or specifications in the Executive Order and CP-206 fail to be met. Non-renewed systems may remain in use for the remainder of their useful life or for up to four (4) years after the expiration date, whichever is shorter, provided the requirements of Section 20 are met.

Table 18-1
Estimated Timeline for the Renewal Process

Action	By	Time before Expiration
Submittal of renewal request	Applicant	18 months
Notice of pending expiration (if no renewal request received)	ARB	18 months
Solicitation of system information	ARB	18 months (or at time of receipt of request)
Application review and initial response	ARB	
Renewal request documentation completed	ARB/Applicant	15 months
Submittal of system information for other agency approval/determinations	Applicant	12 months
Draft Testing protocol and site identification	ARB/Applicant	14 months
Seal site/start test	ARB	12 months
End testing	ARB	11 to 6 months
Letter of Intent and draft Executive Order	ARB	3 months
Final Executive Order	ARB	0 months

19. AMENDMENTS TO EXECUTIVE ORDERS

Amendments to Executive Orders may be requested to add alternate or replacement components to a certified system. Alternate or replacement components may be modifications to originally certified components, components originally certified on another system, or new components.

Sections of this document that describe the process to amend an EO are outlined below.

(a) Request for Amendment	Section 19.1
(b) Review of the Request	Section 19.2
(c) Testing	Section 19.3
(d) Letter of Intent	Section 19.4
(e) Issuance of Executive Order	Section 19.5

19.1 Request for Amendment

The request for amendment shall be written and signed by an authorized representative of the applicant, and shall include the items listed below:

19.1.1 Executive Order to be amended;

19.1.2 Description of change;

19.1.3 Changes to the Executive Order such as:
(a) System or component drawings
(b) Installation, Operations, and Maintenance Manual
(c) Fuel and System Compatibility

19.1.4 Agency approvals or determinations (to be submitted prior to approval of EO amendment, see Section 1.1);

19.1.5 Updates to the training program;

19.1.6 Applicable information specified in Section 11 ; and

19.1.7 Other information such as the Executive Officer may reasonably require.

19.2 Review of the Request

Requests for alternate or replacement components, equipment reconfigurations, or software changes will be subjected to an engineering evaluation to determine the level of testing required. The Executive Officer may require full operational testing of at least 180 days (30 days for Standing Loss Controls that attenuate temperature), allow abbreviated and/or limited operational testing, or determine that a component modification does not

affect the performance of the vapor recovery system and therefore no testing is required.

General criteria to be considered when determining the level of testing are as follows:

(a) extent of physical changes to the component;
(b) extent of material changes to the component;
(c) changes that may affect the durability of the component;
(d) whether performance specifications are the same;
(e) similarity of system designs (i.e. for component transfers); and
(f) information from previous certification testing.

19.2.1 Modified Components

Modified components (i.e., any changes made to vapor recovery components certified as part of a system) may be certified if testing demonstrates that performance standards and specifications will continue to be achieved. The level and duration of operational and/or other testing will be determined by the Executive Officer based on an engineering evaluation.

19.2.2 Transfer of Components from Another Certified System

Components certified with a system may subsequently be considered for use with another certified system design provided that the performance standards and specifications of the components, as specified in the application for the system, are equivalent. Performance standards and specifications, and compatibility, are to be verified by testing and/or engineering evaluation.

Abbreviated/limited operational testing may be considered since the component has previously undergone 180-day/full certification testing as part of another system.

19.2.3 New Component(s) that have not been Previously Certified on a System.

Components that have not previously been certified with a system, whether for use as an alternate or replacement component, shall be required to undergo operational testing of at least 180 days. Limited operational testing may be considered for such components, if determined to be appropriate by the Executive Officer.

19.2.4 Components that do not affect the performance of the vapor recovery system.

Certification shall not be required for components, either new or modified, determined by the Executive Officer not to affect the performance of the vapor recovery system. An engineering evaluation

shall be conducted to document that the change will not affect the performance of the vapor recovery system. The Executive Officer shall notify the applicant in writing of the determination. However, in some cases, such as when a part number changes, an amendment to the Executive Order may be required.

19.2.5 Other Amendments to Executive Orders

(a) System Configurations

Alternative configurations of components of a certified system may be considered for certification based on limited and abbreviated testing. Examples of alternative system configurations include dual fill or remote fill for Phase I and processor placement or vapor piping options for Phase II.

(b) Software Updates

Software revisions of previously certified software components may be considered for certification with limited and/or abbreviated testing. The software change may be approved with no testing if the Executive Officer finds that the software modifications do not affect the vapor recovery system or in-station diagnostic system performance.

19.3 Testing

System or component modifications shall be subjected to sufficient operational, challenge mode, and/or VRED testing to verify the performance and durability of the modified system relative to the certified system that was originally tested.

The level of operational testing to be required is determined as outlined in Section 19.2. Normally, full operational testing of at least 180 days (30 days for Standing Loss Controls that attenuate temperature) is required. Abbreviated and/or limited operational tests may be allowed in some cases, at the discretion of the Executive Officer. If operational tests are abbreviated, the minimum duration (and gasoline throughput requirement) will be specified by the Executive Officer. The test procedure and test frequency requirements for limited operational tests will be specified by the Executive Officer.

If operational testing is required, then the applicant will choose an appropriate test site meeting the requirements of Section 14.1. The applicant shall submit sufficient information to demonstrate that the requirements of Section 12.8 are met.

19.4 Letter of Intent

A letter shall be sent to the applicant stating the Executive Officer's intent to either issue the amended Executive Order or deny the request.

19.5 Issuance of Executive Order

The original expiration date shall be maintained for all Executive Order amendments unless a renewal, as described in Section 18, is specifically requested and approved.

Previous versions of the Executive Order are superseded, as discussed in Section 20.

20. REPLACEMENT OF COMPONENTS OR PARTS OF A SYSTEM WITH A TERMINATED, REVOKED, SUPERCEDED, OR EXPIRED CERTIFICATION

This section applies to systems for which the certification was terminated, revoked, superseded, or has expired. Systems that were installed as of the operative date of a new standard, or that are otherwise subject to Health and Safety Code Section 41956.1, may remain in use for the remainder of their useful life or for up to four (4) years after the effective date of the new standard or the date of revocation, whichever is shorter, provided they comply with all of the specifications of this section. Installed systems that have superseded or expired Executive Orders, unless renewed in accordance with Section 18, may remain in use for up to four (4) years after the expiration date of the Executive Order, provided they comply with all the specifications of Section 20.

20.1 Component and Replacement Parts

Components and replacement parts meeting the currently and prospectively operative performance standards or specifications may be approved for use as a replacement part with the no-longer-certified system for the remainder of the allowable in-use period of the system.

When an approved, compatible component or replacement part that meets the operative standards or specification is determined to be commercially available, only that component or replacement part shall be installed. Approval shall not require the replacement of already-installed equipment prior to the end of the useful life of that part or component. The approved replacement component shall be considered to be commercially available if that component can be shipped within three weeks of the receipt of an order by the manufacturer of the component.

20.2 Component or Replacement Part Not Meeting Specifications

A component or replacement part not meeting the currently operative performance standards or specifications, but which was certified for use with the system, shall be used as a replacement only if no compatible

component or part that meets the new standards or specifications has been approved as a replacement part.

20.3 Component or Part Not Certified with System and Not Meeting Specifications

A component or part that was not certified for use with the system, and that does not meet all of the currently operative standards or specifications may be approved as a replacement part or component for use on the system provided that there are no other commercially available certified parts meeting the most current performance standards or specifications.

20.4 Procedure for Approval of Replacement Parts

20.4.1 A request shall be submitted to the Executive Officer.

20.4.2 The request shall include the information outlined in Section 18.1 and information demonstrating that the component is compatible with the system.

20.4.3 Requests for replacement parts will be subjected to an engineering evaluation to determine the level of testing required. The Executive Officer may require full operational testing of at least 180 days and other certification tests (e.g. VRED or challenge), allow abbreviated and/or limited operational testing, or determine that additional testing is not necessary.

General criteria to be considered when determining the level of testing are as follows:

(a) similarity of system designs;

(b) information from previous certification testing; and

(c) compatibility of the replacement part.

20.4.4 The Executive Officer shall issue an approval letter to authorize the use of the approved replacement part and to detail any modification to the Executive Order for which the part is approved. Requests not granted shall be documented with a disapproval letter.

21. REQUIREMENTS FOR, AND CERTIFICATION OF, LOW PERMEATION HOSES

All hoses which carry liquid fuel against the outermost hose wall shall permeate at a rate of no more than 10.0 grams per square meters per day (g/m^2/day) as determined by UL 330 (Seventh Edition) - Underwriters Laboratories' Standard for Hose and Hose Assemblies for Dispensing Flammable Liquids. Use of a low permeation hose certified per CP-201 will satisfy the testing portion of this section.

The UL 330 testing results shall comprise all of the certification testing for certification as a

low permeation hose.

21.1 Request for Certification

If UL 330 testing is not conducted by the Executive Officer, then the Executive Officer shall be made a beneficiary of the data within the contract of the applicant and the testing facility. All data and documentation relevant to determining the permeation rate of the hose, as described in section 15 of UL 330, shall be transmitted to the Executive Officer by the testing facility, concurrently when transmitted to the applicant.

The request for certification shall be written and signed by an authorized representative of the applicant, and shall include the items listed below:

21.1.1 The applicant shall submit evidence that the hose is compatible with all system hardware that it will be connected to when in use within the gasoline dispensing system.

21.1.2 The applicant shall provide information regarding the materials specifications of all components, including evidence of compatibility with all fuels in common use in California and approved as specified in Section 4.7. If the applicant is requesting a certification for use only with specified fuel formulations, the applicant shall clearly identify, in the application, the included and excluded fuel formulations for which certification is requested.

21.1.3 The applicant shall state the expected useful life of the hose.

21.1.4 All applications shall include detailed engineering drawings of the hose and hose fittings. These drawing must provide all hose and fitting dimensions, including thicknesses of each individual hose material layer. Further, all hose, fitting and gasket materials must be identified.

21.1.5 Hose installation instructions shall be included with the application.

21.1.6 The applicant shall submit evidence of financial responsibility to ensure adequate protection to the end-user of the product as specified in Section 17.4 and to demonstrate the ability to pay for certification tests.

21.1.7 The applicant shall comply with the warranty requirements of section 17.5 and shall submit a copy of the warranty for the hose and samples of component tags.

21.1.8 All applications shall include the estimated retail price of the hose.

21.2 Hose Lengths

Once a hose of a particular construction has been certified to comply with low permeation hose standard per section 21, the Executive Officer shall specify the length of the hose as a condition of certification after considering other applicable performance standards or specifications.

21.3 Identification of Certified Hose

Certified low permeation hoses shall comply with the marking and identification requirements of section 17.7.1

California Environmental Protection Agency

Air Resources Board

PROPOSED

Vapor Recovery Test Procedure

TP-201.1

Volumetric Efficiency for Phase I Vapor Recovery Systems

Adopted: April 12, 1996
Amended: February 1, 2001
Amended: October 8, 2003
Amended: [Insert Amendment Date]

Note: The text is shown in ~~strikeout~~ to indicate that it is proposed for deletion and underline to indicate that it is proposed for addition. [Bracketed text] is not part of the proposed amendment.

California Environmental Protection Agency
Air Resources Board

Vapor Recovery Test Procedure

TP-201.1

Volumetric Efficiency of Phase I Vapor Recovery Systems

Definitions common to all certification and test procedures are in:

D-200 Definitions for Vapor Recovery Procedures

For the purpose of this procedure, the term "ARB or CARB" refers to the ~~State of~~ California Air Resources Board, and the term "Executive Officer" refers to the CARB Executive Officer, or his or her authorized representative or designate.

1. PURPOSE AND APPLICABILITY

The purpose of this procedure is to quantify the transfer efficiency when a bulk gasoline delivery between a cargo tank and underground storage tank is made. This procedure is used to determine compliance with Phase I performance standard specified in Certification Procedure 201 (CP-201).

2. PRINCIPLE AND SUMMARY OF TEST PROCEDURE

During a gasoline delivery, the cargo tank and gasoline dispensing facility (GDF) are instrumented with test equipment in order to determine the amount of vapor returned to the cargo tank and the amount of vapor discharged through the GDF vent pipe. From these parameters the Phase I volumetric efficiency is determined. This procedure provides for determining efficiency by way of either direct measurement or calculation.

If a Phase I system fails to meet the volumetric efficiency as required by CP-201, the cargo tank shall be tested for compliance with the daily standards established for cargo tanks as specified in CP-204 to determine if the failure can be attributed to the cargo tank.

3. BIASES AND INTERFERENCES

3.1 Any vapor leaks exceeding 100% of the Lower Explosive Limit (LEL) during the gasoline bulk delivery precludes the use of this method.

3.2 Gasoline cargo tanks exceeding the allowable daily pressure-decay standards as defined in CP-204 preclude the use of this method.

3.3 The presence of vapor leaks in the GDF, greater than the allowable leak decay limits specified in Section 3.2 of CP-201 preclude use of this method.

3.4 Unusually large cargo tank headspace volumes may cause low volumetric efficiency under certain conditions. Conversely, unusually small cargo tank headspace volumes may result in unusually high efficiency. During the Certification Process for a Phase I system, the cargo tank headspace volumes should be between 3.0 and 10.0 percent of the total cargo tank capacity prior to the delivery.

4. SENSITIVITY, PRECISION AND RANGE

4.1 Mechanical Pressure Gauge. The minimum readability shall be 1.00 inches H_2O with a maximum full-scale range of 30 inches H_2O and minimum accuracy of three percent of full scale. Pressure gauges with a higher resolution and higher accuracy may be deemed acceptable with prior approval by the Executive Officer.

4.2 Electronic Pressure Gauge. The maximum full-scale range of the device shall not exceed 20 inches H_2O with minimum sensitivity of 1.00 inches H_2O and minimum accuracy of 0.5 percent of full scale. Electronic pressure gauges shall be calibrated as described in Section 5 of this procedure.

4.3 Volume Meter, Vapor Return. Minimum full-scale range shall be 5,000 CFH with a maximum rated back pressure less than 1.10 in H_2O. The meter shall have an internal diameter of 3 inches, equal to that of a cargo tank vapor return hose.

4.4 Volume Meter, Vent Pipe. Minimum full-scale range shall be 800 CFH with a maximum rated back pressure less than 0.26 in H_2O. The meter shall have an internal diameter of 2 inches, equal to that of a GDF vent pipe.

4.5 Temperature. Maximum range of 0 to 150°F and accurate to within 2°F.

4.6 Barometric Pressure. Minimum accuracy of .08 inches of mercury (1.0 inch H_2O or 2.7 millibar).

5. EQUIPMENT

5.1 Vapor Return Meter(s). Use a volume meter with minimum specifications described in Section 4 to measure the amount of vapor returned to the cargo tank from the underground storage tank. The meter shall be equipped with a pressure gauge and temperature device as described in Section 4 on the inlet side. The meter shall be connected to the GDF in a fashion as to maintain intrinsic safety, see Figure 3.

5.2 Vent Pipe Meter. Use a volume meter with minimum specifications described in Section 4 to measure the amount of vapor discharged through the vent pipe(s). The meter shall be equipped with a pressure gauge and temperature device as described in Section 4 on the inlet side. The meter shall be connected to the GDF in a fashion as to maintain intrinsic safety, see Figure 3.

5.3 Cargo Tank Back Pressure Assembly. When testing Phase I efficiency without the use of volume meters, use OPW® 633-F and 633-D couplers, or equivalent, as shown in Figure 1. The assembly shall be equipped with a pressure gauge capable of measuring up to 30 inches H_2O back pressure at the gasoline cargo tank vapor

coupler. Temperature may be measured at this point as an alternate to, or in addition to 5.1.

5.4 Storage Tank Pressure Assembly. When testing Phase I efficiency with the cargo tank back pressure assembly and the test facility uses a two point Phase I system with storage tanks manifolded underground, use OPW® 634-B cap(s) or equivalent, equipped with a pressure gauge and center probe as shown in Figure 2

5.5 Combustible Gas Detector. Use a Bacharach Instrument Company Model 0023-7356®, or equivalent, to quantify any vapor leaks occurring during the gasoline bulk drop.

5.6 Barometer. Use a mercury, aneroid, or equivalent barometer with minimum specifications described in Section 4 to measure the barometric pressure during testing. The result shall be used to correct the volume of vapor returned or discharged.

5.7 Temperature. Use a minimum of three thermometers, Thermocouples™, or equivalent, to measure the vapor temperature at each meter. The results shall be used to correct the volume of vapor returned or discharged.

5.8 Stopwatch. Use a stopwatch accurate to within 0.1 seconds to time the delivery rate.

6. PRE-TEST PROCEDURES

6.1 The volume meter(s) shall be proofed against a standard reference meter prior to its initial use in the field or at intervals not to exceed 180 days. Calibration shall be performed at a minimum of three flowrates representing 25, 50 and 75 percent of rated capacity. An official statement of proofing is required.

6.2 The GDF shall be pre-tested for leak integrity as described in TP-201.3 at least 24 hours prior, and no longer than 7-days before testing. If a manifold is to be used at the vent pipe, the manifold shall be installed prior to conducting leak integrity testing.

6.3 No product dispensing shall occur for a minimum of 30 minutes prior to testing.

6.4 Taking caution to avoid venting the storage tanks, connect the vent pipe meter(s) to the appropriate storage tank vent pipe(s) with the inlet side attached to the vent pipe. Use a metal ball valve if required to avoid venting. Attach the PV valve(s) to the outlet side of the meter(s) using a threaded nipple or equivalent. A temporary manifold may be constructed of steel where all vent pipes are connected to a single outlet and a single meter is installed.

6.5 Taking caution to avoid venting the storage tanks, connect the vapor return meter(s) to the appropriate Phase I vapor connection(s) using metal fittings in order to maintain intrinsic safety. Use a metal vapor poppet if required to avoid venting. Connect the cargo tank vapor return hose to the outlet side of the meter. The meter will be in line between the Phase I connection and the cargo tank vapor return hose.

6.6 With no product dispensing, record the product grade, tank capacity, tank temperature and ambient conditions on the data sheet where provided.

6.7 If used, connect the Cargo Tank Back Pressure Assembly to the vapor coupler on the cargo tank. This assembly will be in line with the cargo tank vapor recovery hose. If the cargo tank vapor coupler is equipped with a poppet, use a pressure assembly with center probe.

6.8 If the cargo tank back pressure assembly is being used, install a Storage Tank Pressure Assembly on each Phase I vapor connection of those tanks not receiving product. During each bulk drop, record the maximum pressure in those tanks.

6.9 Record the product quantities to be delivered during each bulk drop. Also record the cargo tank CARB decal number and delivery company name on the data sheet where provided.

6.10 Stabilization. Open the corresponding cargo tank internal vapor valve(s) prior to delivering product. Once the vapor valve(s) is opened, wait a period of at least 1-minute to allow for pressure stabilization between the UST and cargo tank.

7. TESTING

7.1 Record the stabilized, vapor return and vent pipe meter reading(s) on the data sheet where provided.

7.2 Start the gasoline bulk drop. Using the stopwatch, time each gasoline drop to determine the delivery rate for each compartment.

7.3 At minimum, record the following parameters for each gasoline bulk drop:

7.3.1 Initial and final meter readings for each vapor return meter

7.3.2 Average vapor return pressure

7.3.3 Average vapor return temperature

7.4 Repeat Sections 7.1 through 7.3 for each gasoline delivery. For deliveries using different Phase I connections (i.e., different storage tanks), relocate the vapor return meter(s) to the appropriate storage as specified in Section 6.7.

7.5 At conclusion of all gasoline deliveries, ensure that each of the cargo tank internal vapor valve is closed prior to disconnecting. Disconnect the vapor return meter(s) from the storage tank(s) taking care to avoid venting pressure. Disconnect the vapor return hose from the outlet side of the vapor return meter.

7.6 Continue to monitor the vent pipe meter for a minimum of 15 minutes. If the UST pressure is less than 1.00 inches H_2O, testing may be concluded. In the event that the station UST pressure is greater than 1.00 inches H_2O, continue to monitor the

vent pipe meter for an additional 45 minutes (1-hour total). These measurements are to be included in the Phase I efficiency calculation.

8. POST TEST PROCEDURES

8.1 At conclusion of the bulk delivery, ensure that each of the cargo tank internal vapor valves is closed prior to removing connections.

8.2 Remove the Cargo Tank Back Pressure Assembly, if used, from the cargo tank vapor return coupler.

8.3 Remove the Storage Tank Pressure Assembly, if used, from each storage tank where installed.

8.4 Remove the temporary manifold (if constructed) and disconnect all instrumentation from the vent pipe area. Replace the PV valve(s) on the vent pipe(s).

8.5 Verify the quantity of gasoline delivered to each storage tank using the facility tank gauge monitor or with use of a tank gauging stick.

8.6 The static pressure integrity of the vapor recovery system shall be verified as described in TP 201.3 as soon as possible, but not more than 48 hours, after the completion of this test. Failure of the static pressure integrity test shall invalidate the TP-201.1 test results unless the Executive Officer determines that the integrity failure did not result in any significant unmeasured emissions**.**

9. CALCULATING RESULTS

9.1 The measured volume of vapor passed through the vapor return to the cargo tank and vent pipe shall be corrected to standard conditions as follows:

$$V_{corr} = \frac{(V_{vi})(528)[Pb + \Delta h/13.6]}{(T_{vi})(29.92)} \qquad \textbf{Equation 9.1}$$

Where:

V_{corr} = Volume of vapor, corrected to 68^0F (528^0R) and 29.92" Hg
P_b = Barometric Pressure, inches Hg
V_{vi} = Uncorrected volume of vapor (raw meter reading)
T_{vi} = Average or venting temperature at vent meter, ^{0}R
Δh = Average or venting pressure at vent meter, inches H_2O
13.6 = Inches of water per inch of mercury
528 = Standard ambient temperature, 68^0F converted to degrees Rankine

9.2 If a cargo tank back pressure assembly was used to conduct testing, the volume of vapor returned to the cargo tank shall be calculated to standard conditions as follows:

$$V_t = \left[\frac{(0.1337)(G_t)\left(528\left(P_b + \frac{\Delta h}{13.6}\right)\right)}{(T_t)(29.92)} \right]$$ **Equation 9.2**

Where:

V_t	=	Calculated volume of vapor returned to cargo tank corrected to 68^oF (528^oR) and 29.92" Hg
G_t	=	Volume of gasoline delivered, gallons
Δh	=	Final gauge pressure at cargo tank, in. H_2O
T_t	=	Average temperature of vapor returned to cargo tank, ^oR
P_b	=	Barometric pressure, inches Hg
13.6	=	Inches of water per inch of mercury
528	=	Standard ambient temperature, 68^oF converted to degrees Rankine

9.3 The collection efficiency shall be calculated as follows:

$$E = (100)\left[\frac{V_{returned} - V_{vent}}{V_{returned}} \right]$$ **Equation 9.3**

Where:

E	=	Phase I Volumetric Efficiency, percent
$V_{returned}$	=	Vapor Return: From 9.1(V_{corr}) or 9.2(V_t)
V_{vent}	=	Corrected Vent Pipe Discharge: From 9.1(V_{corr})

10. REPORTING RESULTS

10.1 Results shall be reported as shown on the data sheets where provided. Districts may require the use of alternate data sheets provided they include, at minimum, the same parameters identified on Form 1.

11. ALTERNATE PROCEDURES

11.1 This procedure shall be conducted as specified. Modifications to this test procedure shall not be used to determine compliance unless prior written approval has been obtained from the ARB Executive Officer, pursuant to Section 14 of Certification Procedure CP-201.

FORM 1
ARB TP-201.1

Test Date: _____ Observations By: _____

Facility Name: _____

Address: _____

System Description: _____

Time: _____ Ambient Temp: _____ deg F Barometric: _____ Hpa

Wind: _____ mph Altitude: _____ ft Other: _____

Cargo Tank Company: _____

Cargo Tank Decal #(s): Truck: _____ Trailer: _____

Compartment #1

Pre-Delivery Observations		Delivery Observations	
_____	_____	Tank Orientation:	_____
Initial UST Product Temerature:	_____ deg F	Delivered Product Temperature:	_____ deg F
UST Size:	_____ gal	Avg Vapor Return Pressure:	_____ inWC
Amount To Deliver (BOL):	_____ gal	Avg Vapor Return Temp:	_____ deg F
Grade: _____	Loading Temp (BOL): _____	Fuel RVP (BOL):	_____
Initial Meter Reading:	_____ ft^3	**Final Meter Reading:**	_____ ft^3

Compartment #2

Pre-Delivery Observations		Delivery Observations	
_____	_____	Tank Orientation:	_____
Initial UST Product Temerature:	_____ deg F	Delivered Product Temperature:	_____ deg F
UST Size:	_____ gal	Avg Vapor Return Pressure:	_____ inWC
Amount To Deliver (BOL):	_____ gal	Avg Vapor Return Temp:	_____ deg F
Grade: _____	Loading Temp (BOL): _____	Fuel RVP (BOL):	_____
Initial Meter Reading:	_____ ft^3	**Final Meter Reading:**	_____ ft^3

Compartment #3

Pre-Delivery Observations		Delivery Observations	
_____	_____	Tank Orientation:	_____
Initial UST Product Temerature:	_____ deg F	Delivered Product Temperature:	_____ deg F
UST Size:	_____ gal	Avg Vapor Return Pressure:	_____ inWC

Compartment #4

Pre-Delivery Observations		Delivery Observations	
		Tank Orientation:	
Initial UST Product Temerature:	deg F	Delivered Product Temperature:	deg F
UST Size:	gal	Avg Vapor Return Pressure:	inWC
Amount To Deliver (BOL):	gal	Avg Vapor Return Temp:	deg F
Grade:	Loading Temp (BOL):	Fuel RVP (BOL):	
Initial Meter Reading:	ft^3	**Final Meter Reading:**	ft^3

Compartment #5

Pre-Delivery Observations		Delivery Observations	
		Tank Orientation:	
Initial UST Product Temerature:	deg F	Delivered Product Temperature:	deg F
UST Size:	gal	Avg Vapor Return Pressure:	inWC
Amount To Deliver (BOL):	gal	Avg Vapor Return Temp:	deg F
Grade:	Loading Temp (BOL):	Fuel RVP (BOL):	
Initial Meter Reading:	ft^3	**Final Meter Reading:**	ft^3

Vent Pipe Discharge

Delivery Observations		Post Delivery Observations	
Initial Vent Pressure:	inWC	Post Observation Time:	
Initial Vent Temperature:	deg F		
Initial Meter Reading:	ft^3	Remarks:	
		Final Vent Pressure:	inWC
Stack Venting Pressure:	inWC	Final Vent Temperature:	deg F
Stack Venting Temperature:	deg F	**Final Meter Reading:**	ft^3

Figure 1 - Cargo Tank Back Pressure Assembly

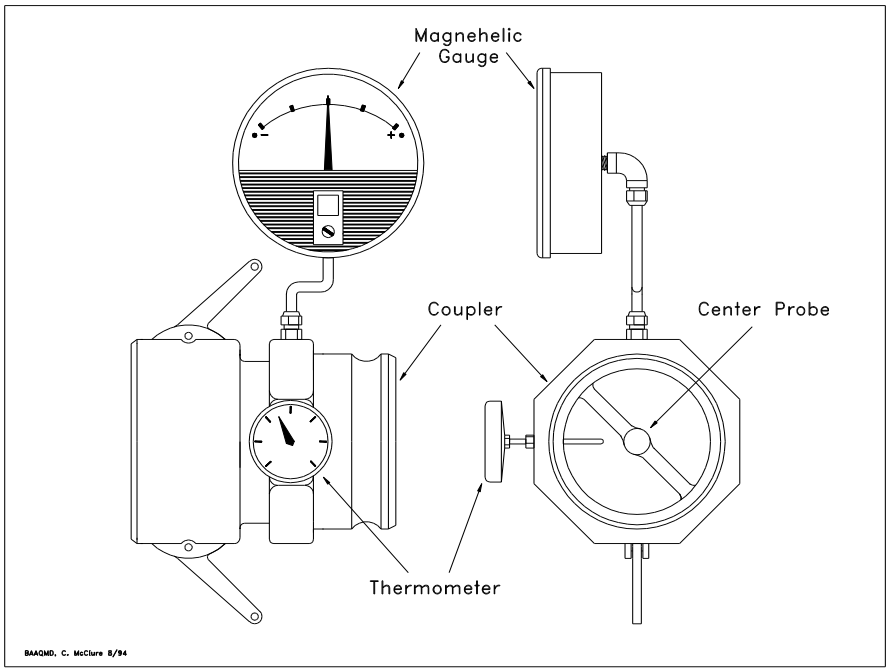

Figure 2 - Storage Tank Pressure Assembly

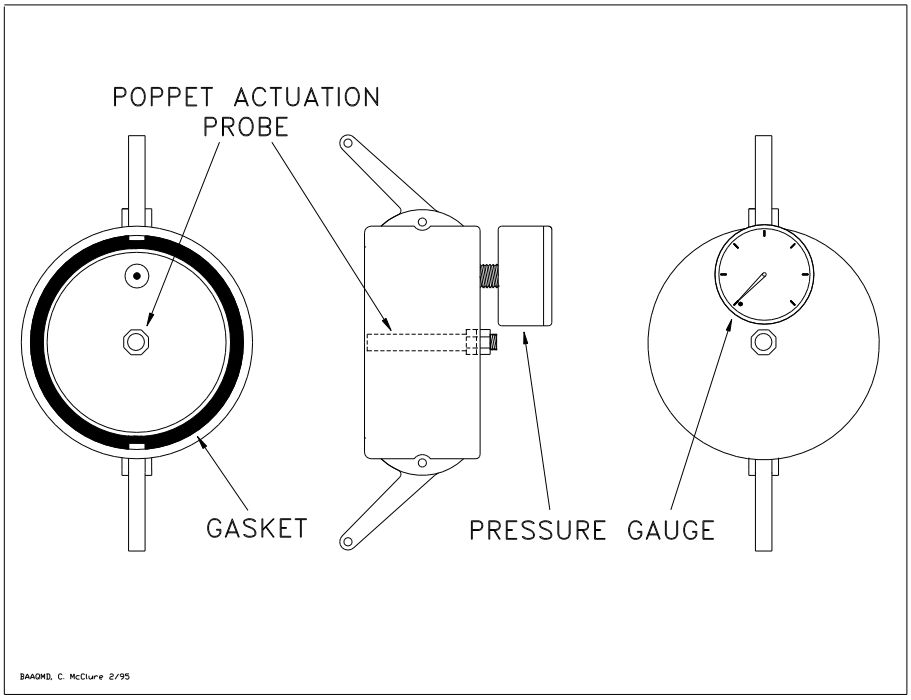

Figure 3 - Vent Pipe and Vapor Return Meter Arrangement

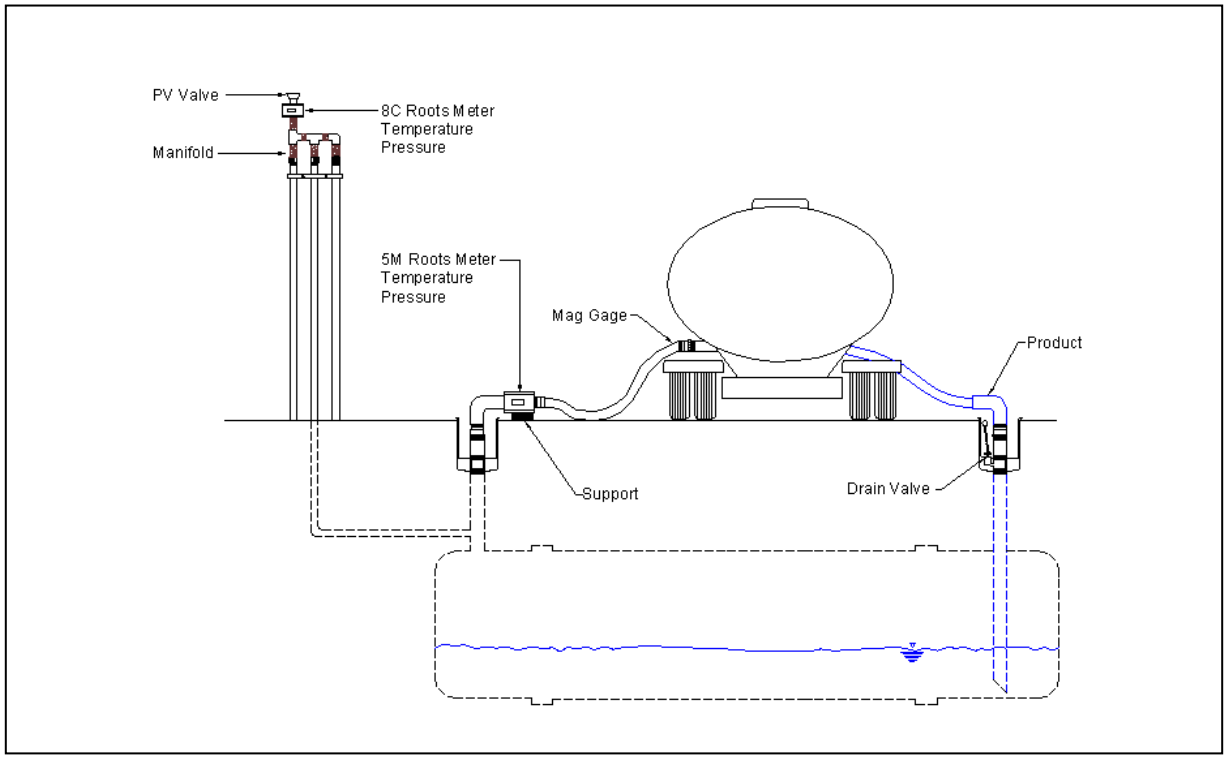

Figure 4 - Example of A Steel Vent Pipe Manifold

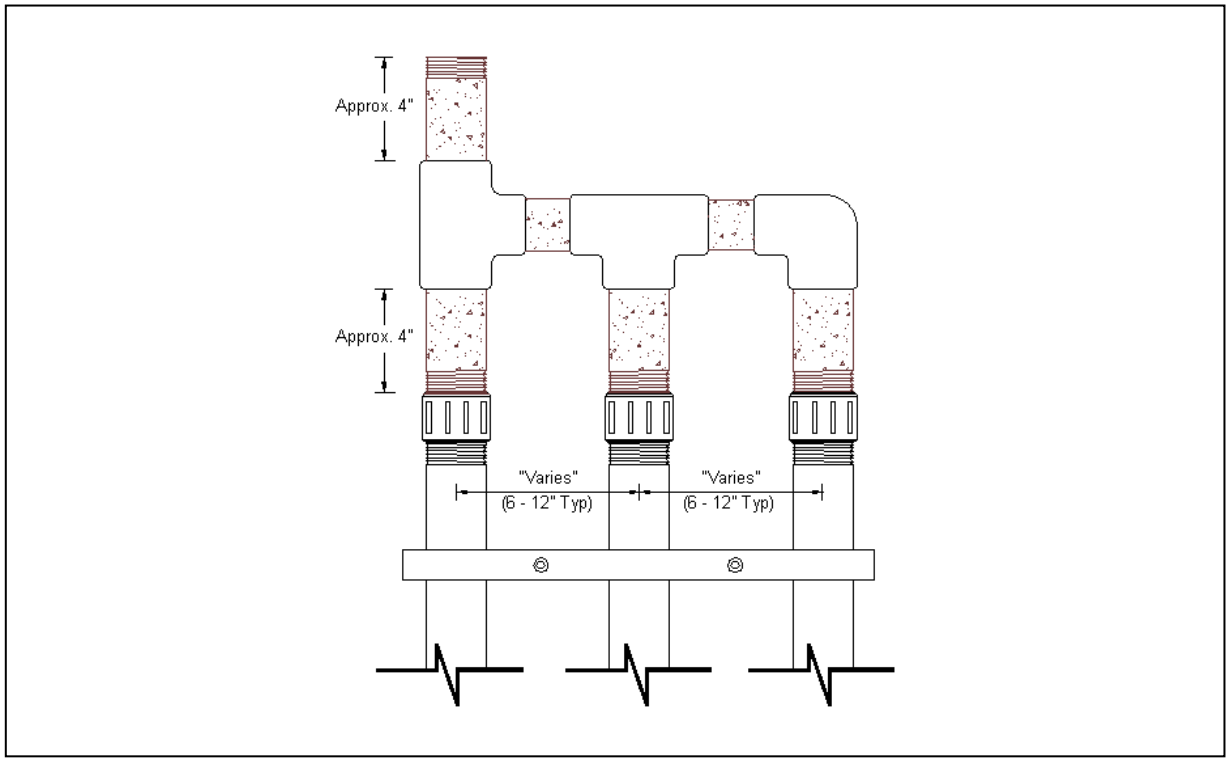

California Environmental Protection Agency

Air Resources Board

PROPOSED

Vapor Recovery Test Procedure

TP-201.2

Efficiency and Emission Factor for Phase II Systems

Adopted: April 12, 1996
Amended: February 1, 2001
Amended: July 25, 2001
Amended: October 8, 2003
Amended: May 2, 2008
Amended: (insert amendment date)

Note: The text is shown in ~~strikeout~~ to indicate that it is proposed for deletion and underline to indicate that it is proposed for addition. [Bracketed text] is not part of the proposed amendment.

California Environmental Protection Agency
Air Resources Board

Vapor Recovery Test Procedure

TP-201.2

Efficiency and Emission Factor for Phase II Systems

Definitions common to all certification and test procedures are in:

D-200 Definitions for Vapor Recovery Procedures

For the purpose of this procedure, the term "CARB or ARB " refers to the ~~State of~~ California Air Resources Board, and the term "~~ARB~~ Executive Officer" refers to the ARB Executive Officer ~~of the ARB~~ or his or her authorized representative or designate.

1. PURPOSE AND APPLICABILITY

The purpose of this procedure is to quantify the representative Phase II vapor recovery mass efficiency and/or mass emission factor, during the ~~C~~ARB Certification Process for Phase II vapor recovery systems at gasoline dispensing facilities (GDF). It is applicable to the determination of compliance with the Phase II performance standards for the maximum allowable mass emission factor and the minimum required vapor recovery mass efficiency as defined in the Certification Procedures (CP-201 and CP-206).

2. PRINCIPLE AND SUMMARY OF TEST PROCEDURE

While fueling 100~~200~~ vehicles, the vapor recovery mass efficiency and/or mass emission factor is determined by direct measurement of the mass of hydrocarbons at the following test point locations: (1) emitted at nozzle/vehicle interface, (2) returned through the vapor passage of the hose, (3) emitted from the pressure/vacuum (P/V) valve(s) on the underground storage tank (UST) vent pipe(s), (4) emitted from the assist processor (4_{inlet} and 4_{outlet}), if applicable, and (5) emitted as pressure related fugitives, as determined using TP-201.2F (see Figure 1). Using the results of the direct hydrocarbon measurements, both the Phase II mass efficiency (in units of percent by weight) and mass emission factor (in units of pounds of hydrocarbon emissions per 1,000 gallons dispensed) may be calculated.

3. BIASES AND INTERFERENCES

3.1 Failure to test a vehicle matrix representing the vehicle population in the State of California may bias the test toward either compliance or noncompliance. This bias is removed by requiring that the testing be based on the most recent representative vehicle matrix, as determined by TP-201.2A.

3.2 Vehicles which do not conform to ~~C~~ARB specifications for fillpipes and openings of motor vehicle fuel tanks, title 13, CCR, section 2235 shall be excluded from the test matrix.

3.3 Vehicle fuel tanks that demonstrate a leak rate greater than 0.01 cfm at 0.5"WC shall be excluded. ORVR vehicles are exempt from this requirement. Other exceptions may be approved by the Executive Officer if the vehicle matrix required by TP-201.2A cannot otherwise be filled.

3.4 Vehicles failing the sleeve leak check requirement shall be excluded.

3.5 Vehicle fueling episodes during which less than six gallons of gasoline are dispensed shall be excluded.

3.6 Vehicle fueling episodes in which the nozzle sleeve is contaminated with liquid gasoline as a result of inappropriate action such as topping off or depressing the nozzle trigger when the nozzle is not properly inserted in the vehicle fill-pipe shall be excluded.

4. RANGE AND MEASUREMENT ERROR

4.1 This procedure can generate emission factors in the range of 0.00 to greater than 15.0 lbs/1000 gallons and efficiencies in the range of 0% to 100%.

4.2 The maximum emission factor error is calculated to be 13%. The maximum efficiency error is calculated to be 1.0%.

5. EQUIPMENT

Alternatives to the required equipment shall only be used subject to prior written approval by the ARB Executive Officer.

5.1 Hydrocarbon (HC) Analyzer(s). Depending on the test point location of the HC measurement, the HC analyzer shall be capable of continuously measuring HC concentrations as follows:

5.1.1 100 ppm to 80 percent by volume using propane as a calibration gas, or 75 ppm to 60 percent by volume using butane as a calibration gas.

5.1.2 Analyzers at test points 1, 3 and 4_{outlet} shall use **either** a destructive detection principle, such as a flame ionization detector (FID) **or a non-destructive detection principle, such as non-dispersive infrared (NDIR).** The analyzer at test points 2 and 4_{inlet} shall use a non-destructive detection principle, such as non-dispersive infrared (NDIR). A sufficient number of hydrocarbon analyzers shall be used to provide for simultaneous, and continuous, measurements at all applicable test

points. The Executive Officer may allow other measurement methods if it is determined that equivalent results can be obtained.

5.1.3 Hydrocarbon Calibration Gases. Cylinders of certified, or NIST traceable, calibration gases using propane (or butane) in nitrogen capable of providing calibration for the analyzer ranges recommended in Table 5-1.

Table 5-1
Recommended Continuous Analyzer Concentration Ranges

Test Point (Fig.1)	HC Measurement	Ranges	Usable Concentration Range
1	FID or NDIR	0 to1,000 ppm 0 to 5,000 ppm 0 to 1.0% 0 to 5.0%	100 to 950 ppm 500 to 4,750 ppm 1,000 ppm to 9,500 ppm 5,000 ppm to 4.75%
2	NDIR	0 to 10.0% 0 to 50.0%	1.0% to 9.5% 5.0% to 47.5%
3	FID or NDIR	0 to 1,000 ppm 0 to 5,000 ppm 0 to 1.0% 0 to 5.0% 0 to 10.0% 0 to 50.0%	100 to 950 ppm 500 to 4,750 ppm 1,000 to 9,500 ppm 5,000 ppm to 4.75% 1.0% to 9.5% 5% to 48%
4_{inlet}	NDIR	0 to 10.0% 0 to 50.0%	1% to 9.5% 5% to 47.5%
4_{outlet}	FID or NDIR	0 to10 ppm 0 to 100 ppm 0 to 1,000 ppm 0 to 5,000 ppm 0 to 1.0% 0 to 5.0%	1.0 to 9.5ppm 10 to 95 ppm 100 to 950 ppm 500 to 4,750 ppm 1,000 to 9,500 ppm 5,000 ppm to 4.75%
	CO and CO_2 Measurements for Destructive Processor	Ranges	Usable Concentration Range
4_{outlet}	NDIR~~CO~~	0 to 500 ppm (CO)	50 to 475 ppm (CO)
4_{outlet}	NDIR~~CO_2~~	0 to 5.0% (CO_2) 0 to 10.0% (CO_2)	5,000 ppm to 4.75% (CO_2) 1.0% to 9.5% (CO_2)

Each range requires three calibration gases:

(1) High-Range Gas: Concentration between 80 and 100% of range.
(2) Mid-Range Gas: Concentration between 40 and 60% of range.

(3) Zero Gas: Nitrogen with a hydrocarbon concentration less than 0.25% of range.

5.1.4 Gas Dilution System. A gas dilution system which meets the requirements of EPA Method 205, Verification of Gas Dilution Systems for Field Instrument Calibrations, CFR 40, Part 51, Appendix M, may be used to provide low-level calibration gases from a high-level calibration gas. The calibration gas used with a gas dilution system shall be an EPA Protocol gas. A gas dilution system which meets the requirements of EPA Method 205 may be used for all analyzer calibrations and sampling system bias checks. If a diluter is used, it must be included in the calibration of the analyzer(s).

5.1.5 Sample lines. Constructed of Teflon or other material that does not absorb or otherwise alter the sample gas.

5.1.6 Additional Analyzers for Systems with Vapor Processors: If processor exhaust flowrate is to be determined by USEPA Method 2B 40 CFR, Part 60, App.A, then the following additional analyzers are needed for Test Point 4_{outlet}.

5.1.6.1 Carbon Monoxide (CO) analyzer: As specified in ARB Method 100, title 17, CCR, section 94114, or USEPA Method 10, "Determination of Carbon Monoxide Emissions From Stationary Sources", 40 CFR Part 60, App. A.

5.1.6.2 Carbon Dioxide (CO_2) analyzer: As specified in ARB Method 100 or USEPA Method 3A, "Determination of Oxygen and Carbon Dioxide Concentrations in Emissions from Stationary Sources (Instrumental Analyzer Procedure)", 40 CFR Part 60, App. A.

5.2 Data Acquisition System/Data Recorder: Provide a permanent record of hydrocarbon analyzer data using a strip chart recorder. A datalogger or another electronic data acquisition is also recommended. Data shall be collected at intervals not to exceed one second. Any electronic data acquisition system must be capable of integration at a ten-second interval. The strip chart, as well as the data acquisition system, must have a resolution of 0.5 percent of the analyzer range.

5.3 Volumetric Flow Rate Meters. Recommended volume meter ranges for each test point are shown in Table 5-2.

Table 5-2
Volume Meter Specifications

Test Point	Typical Range Measured (cfm)	Recommended Meter Range (cfh)
1	2 to 5	0 to 800
2	0.5 to 1.4	0 to 800
3	Vent sleeve sweep: 2 to 20 Vent : 0 to 5	0 to 800 0 to 800
4_{inlet}	System specific	Determined during evaluation
4_{outlet}	System specific	Determined during evaluation

The volume meters are positive displacement or turbine meters that meet the following requirements:

5.3.1 Back ~~p~~Pressure ~~l~~Limits (BPL):

(a) Meters with a manufacturer specified maximum flow rating of greater than 1000 CFH shall demonstrate BPL < 1.10 inches WC at a flow rate of 3,000 CFH or the maximum flow rating specified by the manufacturer, whichever is less and BPL < 0.05 inches WC at a flow rate of 30 CFH.

(b) Meters with a manufacturer specified maximum flow rating of less than 1000 CFH shall demonstrate BPL < 0.70 inches water column at a flow rate of 800 CFH and BPL < 0.04 inches WC at a flowrate of 16 CFH.

5.3.2 The error of the meter shall be less than 2% of the true volume over the entire range of flow rates for which it will be used.

5.3.3 The meter shall be equipped with taps to accommodate the following as applicable for the specific Test Point:

(a) Inlet side: thermocouple with a range of 0 to 200 deg F.

(b) Inlet side: concentration sampling and pressure measurement

(c) Inlet and outlet sides: differential pressure gauge with a full-scale range of less than or equal to four times the backpressure limit.

5.3.4 Pressure Measurement Devices for Volume Meters

Transducers, liquid manometers, Magnahelic gauges or equivalent with a design range suitable for the pressure being measured (see Section 5.3.1). The error of the pressure measuring device shall not

exceed 3% of the true pressure over the range of pressures to be quantified.

5.3.5 Temperature Measurement Device for Volume Meters

Thermocouple or thermometer with a design range suitable for the temperature being measured (see Section 5.3.3(a)). The error in the temperature measurement shall not exceed 4 degrees Fahrenheit.

5.4 Vehicle Leak Check Equipment (see Figure 2)

5.4.1 Fill pipe Interface: A plug which provides a seal at the fill pipe outlet equipped with two taps. One tap for pressurizing the fill pipe and vehicle tank with nitrogen, the second tap for connection to a pressure measurement device.

5.4.2 Flow meter: Appropriately sized for measuring 0.01 cfm (283 ml/min).

5.4.3 Pressure Measurement Device: Transducer, liquid manometer, Magnehelic gauge or equivalent with range of 0.0 to 1.0 inch WC.

5.4.4 Pressurizing System: Nitrogen cylinder (commercial grade), two stage pressure regulator with gauges indicating cylinder pressure and supply line pressure, a coarse control valve for regulating the pressure in the supply line to the flow meter, a fine control valve for adjusting the flow through the flow meter and a hose for supplying nitrogen to the vehicle tank.

5.4.5 Fillpipe with Closed End: A stand-alone vehicle fill-pipe, at least 18 inches in length, which has been closed off at one end. This fill-pipe is used to check for leaks in the pressurizing apparatus.

5.5 Nozzle Sleeve and Nozzle Sleeve Leak Check Equipment (see Figures 3 through 7)

5.5.1 Nozzle Sleeve: A sleeve fabricated using a material compatible with California gasolines which captures the entire mass of gasoline vapors emitted at the nozzle/vehicle interface. An example design for the sleeve is shown in Figures 3 through 5.

Other designs may be used if demonstrated to produce less than 0.01 inches WC vacuum inside the sleeve at a sleeve sweep rate of five cubic feet per minute (cfm) and receive prior approval by the Executive Officer.

5.5.2 Sleeve Tubing: The sample tubing shall be Teflon, or equivalent, and as lightweight as practical so that the behavior of the nozzle operator is minimally affected by testing activities. The unanalyzed portion of sample flow shall be safely discharged to the atmosphere.

5.5.3 Sleeve Sample Pump: Carbon vane, metal bellows or other pump design which does not provide a source of or sink for hydrocarbon vapors, capable of 5 cfm.

5.5.4 Leak check portable analyzer: A combustible gas detector that complies with the requirements of USEPA Method 21, "Determination of Volatile Organic Compounds Leaks", 40 CFR Ch.1, Part 60, App. A or TP-204.3.

5.6 Vapor Return Line (Test Point 2): See Figures 8 to 11.

5.6.1 Liquid trap for volume meter: **When the configuration of the vapor return line allows it, a** ~~A~~ transparent liquid trap shall be installed at the lowest point in the plumbing installed on the inlet side of the meter. The liquid trap shall be designed and installed to allow for the removal of any liquid gasoline after each refueling event. The quantity of liquid gasoline shall be measured and recorded after each vehicle fueling. The trap shall be designed to allow liquid removal with minimal effort or tools. Ball valves shall be installed at the inlet to the liquid trap and at the exhaust of the vapor return in order to isolate the meter if servicing is required during the test. **In cases where the configuration of the vapor return line does not allow for the installation of a transparent liquid trap as described in this section, transparent tubing shall be used to connect the volume meter to the test dispenser.**

5.6.2 Test Manifold: Piping inserted between liquid trap and volume meter with taps to allow measurement of temperature, pressure and hydrocarbon concentration.

5.6.3 Isolation valves: **Optionally, a** ~~Non~~**non**-restrictive ball valve of appropriate size to allow removal of test apparatus at Test Point 2 during non-test intervals.

5.6.4 In-line plumbing: Test apparatus piping shall be compatible with gasoline and adaptable to various vapor line configurations to allow total measurement of the vapor return line volume as well as routing and return of a portion of the vapor to the non-destructive hydrocarbon analyzer.

5.6.5 Vapor return line sample pump: Carbon vane, metal bellows or other pump design which does not provide a source or sink for HC vapors, capable of 0.5 to 2 cfm.

5.6.6 Vehicle Fuel Tank Temperature Probe. Apparatus for measuring temperature of vapors in vehicle fuel tank, which consists of an intrinsically safe thermocouple or thermometer on a nozzle spout so that the temperature sensor is near the tip of the spout.

5.7 Vent Sleeve Sampling Apparatus (Test Point 3): See Figure 12

5.7.1 A sleeve that captures the entire mass of gasoline emitted at the storage tank vent pipe(s). Other designs may be used if demonstrated to produce less than 0.01"WC inside the sleeve and within one inch of the outer surface of the tank vent or tank vent PV valve at a ~~sleeve~~ sweep rate of ~~20~~ between one (1) and two (2) cfm and receive prior approval by the Executive Officer. Sleeves must be tested before use in the field to validate the collection efficiency of the sleeve and accuracy of the hydrocarbon mass calculation. Testing shall occur at two flow rates as described below. CAUTION: Ensure that the exhaust from the vent sleeve pump and vent sleeve analyzers are directed to a safe location and that hazards associated with exposure to gasoline and gasoline vapors are addressed.

5.7.1.1 High flow rate (3-7 cfm). Bubble nitrogen through gasoline filled impingers and then through a roots meter (equipped with meter temperature and pressure monitoring) at inlet of simulated vent pipe discharging to the vent sleeve sample apparatus equipped with vent sleeve hydrocarbon analyzers. Quantify HC concentration of flow from simulated vent line by sampling at outlet of gasoline impingers with NDIR analyzer with 0 to 80% range. Determine volume of flow into the simulated vent pipe and vent sleeve using a volume meter installed at the simulated vent line inlet. The mass of HC entering the vent sleeve must be ±5% of the mass of HC collected from the vent sleeve as determined by the vent sleeve sampling apparatus volume, temperature, pressure and HC concentration measurements and data recording system and mass calculation algorithms.

5.7.1.2 Low flow rate (@200 ml/min). Run propane calibration gas with a concentration of 10 to 20% by volume through a mass flow controller (a bubble meter or precision rotameter with sufficient accuracy is acceptable) and into the inlet of the simulated vent pipe discharging to the vent sleeve sample apparatus equipped with vent sleeve HC analyzers. Determine the time that calibration gas was allowed to enter the sleeve and calculate the mass of propane entering the sleeve from the flow rate determined from the mass flow controller and the known calibration gas concentration. The mass of HC entering the vent sleeve must be ±5% of the

mass of HC collected from the vent sleeve sampling apparatus volume, temperature, pressure and HC concentration measurements and the data recording system and mass calculation algorithms.

5.7.2 Sleeve Tubing: Teflon. Care should be taken that a representative sample of the sleeve flow is routed to the analyzer. The unanalyzed portion of sample flow shall be safely discharged to the atmosphere.

5.7.3 Sleeve Sample Pump: Carbon vane, metal bellows or other pump designs which do not provide a source of or sink for hydrocarbon vapors, capable of 2 to 20 cfm.

5.7.4 Ball Valve: Installed upstream of volume meter to allow closing off vent pipe for testing purposes.

5.8 Vapor Processor (Test Point 4)

5.8.1 Processor inlet sample pump: Carbon vane, metal bellows or other pump design which do not provide a source or sink for hydrocarbon vapors, capable of 2 cfm during sampling. **This equipment is only required for vapor processors employing a destructive principle such as thermal oxidation.**

5.8.2 Processor outlet sample probe: Use equipment specified in TP-201.1A.

5.9 Pressure Related Fugitive Emissions (Test Point 5). Use equipment specified in TP-201.2F.

5.10 Ambient Temperature Measurement: Use a temperature measurement device capable of measuring ambient temperature with a resolution of 2 deg F.

5.11 Ambient Pressure Measurement: Use a pressure measurement device capable of measuring atmospheric pressure to within 2.5 mm Hg.

5.12 Gasoline Containers for RVP Samples: As specified in Section 2296 of title 13, CCR.

5.13 Stopwatch: Use a stopwatch accurate to within 0.2 seconds to measure the dispensing rate.

5.14 Vehicle Fillpipe Check Equipment: A rod, level, protractor and clearance gauge to determine compliance with the “Specifications for Fill Pipes and Openings of Motor Vehicle Fuel Tanks”, title 13, CCR, section 2235.

6. CALIBRATIONS

All measurement devices shall be calibrated as described below. A record of all calibrations shall be maintained.

6.1 Analyzers: Calibration curves shall be produced no longer than six months before testing using ARB's SOP 054, "Standard Operating Procedure for the Multilevel Calibrations of Pollutant Gas Analyzers". Field calibrations during testing shall be conducted as described in Section 8.1.1.

6.2 Calibration Gases:

6.2.1 Certification. The calibration gases must be certified according to one of the following options:

6.2.1.1 The EPA Traceability Protocol for Assay and Certification of Gaseous Calibration Standards (40 CFR Part 75, App. H), or

6.2.1.2 To an analytical accuracy of ± 2% percent, traceable to a reference material approved by the National Institute of Standards and Technology (NIST) and recertified annually.

6.2.2 Documentation. Information on calibration gas cylinders shall be entered into a log identifying each cylinder by serial number. Sufficient information shall be maintained to allow a determination of the certification status of each calibration gas and shall include: (1) the data put in service, (2) assay result, (3) the dates the assay was performed, (4) the organization and specific personnel who performed the assay, and (5) the date taken out of service.

6.3 Volume Meters: All volume meter calibrations shall be NIST traceable. Volume meters shall be calibrated on an annual basis against a bell type spirometer at flow rates representing 1, 10, 30, 60, and 90% of the meter capacity. The accuracy of the meter shall be 2% of the true volume measured over the range of flow rates encountered in application of this test procedure. Alternatively, the field volume meter may be calibrated against a transfer meter. The transfer meter shall be calibrated against the bell type spirometer or wet test meter and may not be used in the field as a working meter.

6.4 Pressure Measurement Devices: Calibrate pressure measurement devices prior to and immediately following the test period with a static pressure calibrator for five points over a range of – 10 to +10 inches water or appropriate range of operation. The accuracy of the device shall be 5%. Alternatively, pressure measurement devices may be calibrated in accordance with manufacturer's specifications with a documentation of the specifications and the calibrations in the certification test report. Pressure

measurement devices used to determine fugitive emissions shall meet the requirements of TP-201.2F.

6.5 Temperature Measurement Devices: Temperature measurement devices shall be checked semi-annually using an ice bath, ambient air, and boiling water. This accuracy check shall be conducted by comparison to a NIST traceable measurement device.

7. PRE-TEST REQUIREMENTS

7.1 Vehicle Test Matrix. The matrix of vehicles to be tested is defined by TP-201.2A. The test matrix must be approved by the ARB Executive Officer before testing begins.

7.2 Certified Phase I System and Phase II System Documentation. Verify that the test site has a certified Phase I system. Document the Phase I and Phase II system information on a form such as provided in Figure 13.

7.3 Pre-test Pressure Integrity Test. TP-201.3 shall be conducted preceding test equipment installation. ~~First, check UST pressure. If at a vacuum, add N2 to bring UST pressure up to zero gauge pressure, then proceed with TP-201.3. Document test results~~.

7.4 Equipment Set-up at Test Site. Select dispenser(s) to be tested and ensure dispenser has valid Weights and Measures approval seal (sticker). Set-up equipment as described below. Use safety cones to divert vehicle traffic during set-up, however, place sampling equipment so that test can be conducted while fueling vehicles normally. Testing activities should be conducted so that alterations to the system and facility are minimized.

7.4.1 Vehicle Leak Check Apparatus: Assemble the vehicle leak check equipment as shown in Figure 2. Conduct a leak check of the sampling arrangement by pressurizing the apparatus to 1.0 inch WC using the closed-off fillpipe. Apparatus shall maintain 1.0 inch WC for 20 seconds.

7.4.2 Test Point 1 – Nozzle/Vehicle Interface: See Figure 1. Assemble the nozzle sleeve sampling apparatus as shown in Figure 3.

7.4.3 Test Point 2 – Vapor Return Line: See Figure 1. Install the sampling equipment as shown in Figures 8 through 10. The volume meter is inserted into the vapor return line at the vapor hose or dispenser vapor manifold connection to the vapor riser. Plumbing in the vapor return line should:

(1) Minimize the length of the vapor return line between the nozzle and the sampling point to reduce biases related to entry of condensation from the vapor return line into the volume meter.

(2) Minimize the pressure drop for flow through added plumbing and the volume meter.

(3) Return the entire volume of any sample extracted from the vapor return line.

7.4.3.1 Pressure Drop Check: Measure the backpressure from the nozzle to the sampling apparatus using TP-201.4. Then connect the sampling apparatus and measure the backpressure again. The backpressure added by the test equipment shall not increase the backpressure by more than 10%. Record the actual backpressure measurements.

7.4.3.2 Verify that the flowrate through the analyzer (using rotameter at analyzer inlet) and the pressure of the sampled vapors or calibration gas in the analyzer (pressure gauge at analyzer outlet) are identical both during sampling and calibration.

7.4.4 Test Point 3 – Vent Pipe: See Figure 1. Assemble the vent sleeve and sampling equipment as shown in Figures 12 through 13. All test sites are required to manifold their vent pipes to one P/V valve. Before replacing the P/V valve, determine the positive and negative cracking pressures as described in TP-201.2B.

7.4.5 Test Point 4_{inlet} and 4_{outlet} - Vapor Processor: See Figure 1. Install sampling equipment upstream and downstream of vapor processor.

7.4.5.1 Inlet to Vapor Processor: The vapor processor inlet sample and temperature and pressure measurements must be taken from a sample manifold attached to the inlet side of the volume meter which has been inserted in the inlet line. The installation of test equipment shall not interfere with the normal operation of the vapor incinerator. The total volume of sample taken from the processor inlet for the purpose of hydrocarbon concentration measurement must be returned, unaltered to the sample manifold. **Processor inlet sampling is only required for vapor processors employing a destructive principle such as thermal oxidation.**

7.4.5.1 Outlet of Vapor Processor: Sampling points at the processor ideally should be at least eight stack diameters downstream and two stack diameters upstream of any flow disturbance. If these criteria cannot be met without altering the stack, a sampling point which is at least two stack diameters

downstream and one diameter upstream of any flow disturbance may be used. Sampling locations that do not meet these minimum criteria must be approved in advance of testing by the ARB Executive Officer. Hydrocarbon concentrations are measured at this test point for all vapor processors. CO and CO_2 concentrations are also measured for destructive processors if using USEPA Method 2B, "Determination of Exhaust Gas Volume Flow Rate from Gasoline Vapor Incinerators", 40 CFR Part 60, App. A.

7.5 The certification engineering evaluation may have identified additional parameters beyond those listed in TP-201.2 to be monitored during the test. Verify that all equipment needed to monitor any additional parameters is calibrated and installed. Prepare additional data forms if necessary.

7.6 Post-Installation Facility Leak Test: After all test equipment is installed, conduct a pressure decay test in accordance with TP-201.3. **The leak test shall occur at least 24 hours prior, and no longer than seven-days before testing.** Corrective action shall be taken as necessary until facility meets TP-201.3 requirements.

7.7 Test Point 5 - Fugitive Emissions: See Figure 1. Determine fugitive emissions as specified in TP-201.2F.

7.8 System Equilibration. After completing 7.~~7~~6, wait at least 16 hours before data collection. Take steps to ensure facility and system operations are minimally disturbed by the test equipment in the period between equipment installation and the start of the test.

7.9 Sampling System Bias Checks: Check sampling set-up by introducing a known hydrocarbon concentration as close to the sample point as possible. If the difference between the analyzer field calibration and the sample system bias check exceeds +5% of the range for the high-level calibration gas, the system fails the bias check and corrective action must be taken. Calculate bias using Equation 8.3. All sampling points must pass the bias check before the test can proceed.

$$\text{Bias} = \left[\frac{(\text{Ca} - \text{Cb})}{\text{R}}\right] \text{x}100$$

where:

C_a = analyzer response for calibration gas for field calibration

C_b = analyzer response for calibration gas for sampling system bias check

R = analyzer range

8. DAILY PRE-TEST PROCEDURES

8.1 Field Calibration

8.1.1 Hydrocarbon Analyzers: Follow manufacturer's instructions concerning warm-up time and adjustments. On each test day, prior to data collection, zero the analyzer with a zero gas and span with known concentrations of calibration gases at levels which are 40 to 60% and 80 to 100% of the concentration ranges to be used for the test.

Conduct the analyzer calibration error check by sequentially introducing the three calibration gases (high-range, mid-range and zero gas) and recording the analyzer response to each calibration gas. Make no adjustments to the sampling/analysis system except those necessary to achieve the proper calibration gas flowrate. The analyzer calibration error for any calibration gas shall not exceed ±2 percent of the range. If needed, take corrective action until acceptable performance is achieved.

Perform a leak check on the vacuum side of the assembly at the maximum pump vacuum. Correct any leaks found and repeat the leak check and correction procedure until no leak is detected.

8.1.2 CO and CO_2 Analyzers: Repeat instructions in 8.1.1 for CO and CO_2 analyzers if applicable.

8.1.3 Pressure Measurement Device: Prior to and immediately following each day of testing, record the pressure measuring device(s) response to the pressure generated by a static pressure calibrator at 0, 40, and 80% of the specified range of operation. If pressure differs more than 10%, recalibrate the device. Document instrument response before and after adjustment.

8.1.4 Temperature Measurement Device. Check the accuracy of the temperature measurement device(s) against an NIST traceable mercury-glass thermometer at ambient temperature prior to and immediately following each day of testing. If necessary, adjust the temperature read-out in accordance with manufacturer's instructions. Provide a copy of these instructions and document the instrument response before and after adjustment in the test report.

8.2 Determination of Nozzle Sleeve Response Time. This determination can be conducted once for Test Point 1. If the sampling apparatus ~~or dispenser location~~ for Test Point 1 is changed, the response time determination shall be repeated.

8.2.1 Set the sample flow rate at 5 cfm. Lower flowrates may be used if sleeve leak check requirements are met (see 9.4.4.2).

8.2.2 Introduce ambient air from a location removed from any potential gasoline vapor source into the sleeve until the analyzer reading has stabilized at a level at or near zero.

8.2.3 Move the sleeve over an open **hydrocarbon gas calibration standard** ~~gasoline container or other HC source~~ that has been demonstrated to produce vapor concentrations within the range of the nozzle sleeve hydrocarbon analyzers. Measure the time interval from the time the sleeve was moved to the **hydrocarbon gas calibration standard** ~~vapor source~~ to the time that 90% of the **selected analyzer range or** final stable analyzer reading is observed. Perform this test sequence 3 times, calculate the average and define the result as the "nozzle sleeve response time".

~~8.3 Sampling System Bias Checks: Check sampling set-up by introducing a known hydrocarbon concentration as close to the sample point as possible. If the difference between the analyzer field calibration and the sample system bias check exceeds +5% of the range for the high-level calibration gas, the system fails the bias check and corrective action must be taken. Calculate bias using Equation 8.3. All sampling points must pass the bias check before the test can proceed.~~

$$\cancel{\text{Bias} = \left[\frac{(Ca - Cb)}{R}\right] x100}$$

~~where:~~

~~C_a = analyzer response for calibration gas for field calibration~~

~~C_b = analyzer response for calibration gas for sampling system bias check~~

~~R = analyzer range~~

~~8.4~~ **8.3** Initiate Test Documentation:

~~8.4.1~~ **8.3.1** Photographs shall be taken at each test point to document the equipment set-up. Any changes in configuration during the test shall also be documented by photographs, along with the date and time of the modification. A video demonstrating emission measurement during a vehicle fueling as described in sections 9.1 to 9.4 is recommended.

~~8.4.2~~ **8.3.2** Testers shall maintain a test log which shall consist of a narrative documenting activities at the test site, such as Phase I fuelings,

modifications to equipment and the reasons for testing decisions. The tester shall update the test log at least twice a day.

~~8.5~~ **8.4** RVP Sample: If required by the ARB Executive Officer, collect gasoline samples of each grade as described in title 13, CCR, Section 2296.

9. TEST PROCEDURE

Collect data during refueling of vehicles as defined in the vehicle test matrix as described below. An example data sheet is given in Figure 15. The Executive Officer shall conduct the fueling. Hydrocarbon emissions at test points 3 (vent) and 4 (processor), if applicable, are to be monitored continuously (24 hours/day) throughout the duration of the test.

9.1 When a vehicle corresponding to a vacancy in the vehicle test matrix arrives at the instrumented dispenser, the tester shall explain that a test is underway and request that the consumer participate. If approval is obtained, proceed as follows:

9.1.1 Determine if the vehicle is equipped with onboard refueling vapor recovery (ORVR) by checking the emission label attached to the vehicle's hood (title 13, CCR, section 1965). Look for the "Evap Family" code. If the fifth digit is an "R", then the vehicle has ORVR. If the fifth digit is an "E" or "V", it does not have ORVR. Record on data sheet.

9.2 Install the nozzle sleeve on the nozzle at the instrumented dispenser as shown in Figure 5. Check liquid trap and remove any liquid collected. Record amount of liquid collected.

9.3 The vehicle fuel tank is checked for leaks using the apparatus shown in Figure 2. ORVR vehicles are exempt from the leak check.

9.3.1 Connect the fill-pipe interface to the vehicle fill pipe.

9.3.2 Open the main valve on the nitrogen cylinder. Use the two stage regulator to adjust the supply line pressure and the coarse flow control valve and the rotameter fine flow control valve to maintain a stable pressure reading of 0.5 inches WC in the vehicle fill-pipe. If 0.5 inches WC cannot be maintained for 10 seconds, record an unacceptable vehicle leak for the subject vehicle.

9.3.3 If the 0.5 inches WC can be maintained, determine the leak rate by observing the rotameter reading for 10 seconds. Record the rotameter reading. If a flow rate greater than 0.01 cfm (283 ml/min) was observed on the rotameter, record an unacceptable vehicle leak for the subject vehicle.

9.3.4 Disconnect the equipment from the vehicle fillpipe. Continue with the test procedure only if the vehicle passed the leak check.

9.3.5 Measure vehicle fuel tank temperature using apparatus described in 5.6.6.

9.4 Vehicle Fueling with Nozzle Sleeve

9.4.1 If necessary, move sleeve to nozzle grade desired by customer. Turn on the nozzle sleeve sampling pump. Record the initial volume meter reading. Hydrocarbon concentration data collection for a dispensing episode begins with the insertion of the nozzle into the vehicle.

9.4.2 The Executive Officer shall conduct the fueling. The fueling shall be conducted "hands off" at the high clip rate with no top-offs. Fuel is dispensed until the first nozzle shutoff after a minimum of six gallons is dispensed.

9.4.2.1 Start the stopwatch when the dispenser volume meter begins to move.

9.4.2.2 During the fueling, check that the sleeve is capturing emissions effectively using the portable hydrocarbon analyzer (see Figure 7). The sleeve flow rate must be high enough to prevent the presence of hydrocarbon vapors at concentrations greater than 10% of the LEL (2,100 ppm as propane as determined by USEPA Method 21, "Determination of Volatile Organic Compounds Leaks", 40 CFR Ch.1, Part 60, App. A or TP-204.3) at the air inlet ports near the top of the vent sleeve. If this concentration is exceeded, the data collected is invalid.

9.4.2.3 Stop the stopwatch when the dispenser volume meter stops moving. Record the volume dispensed and time elapsed during dispensing. Invalidate data if volume dispensed is less than six gallons and the dispensing flow rate is outside the range of 6.0 to 10.0 gallons/minute. Invalidate data if more than one premature shutoff occurs before a minimum of six gallons is dispensed.

9.4.3 After termination of product dispensing, the Executive Officer shall turn off the dispenser and remove the nozzle from the vehicle fill pipe to minimize the chance of contaminating the nozzle sampling sleeve with liquid gasoline. Document whether or not liquid gasoline is present in the sleeve. Invalidate the results if liquid is present. The nozzle **sleeve shall be removed and the nozzle** ~~with the sleeve~~ shall be hung on the dispenser. Data shall continue to be collected from the termination of dispensing **until the nozzle sleeve hydrocarbon analyzer concentration is less than 100 ppmv as propane, or** for **a time**

period of at least the nozzle sleeve response time determined in Section 8.2**, whichever is longer**. Then the nozzle sleeve sample pump is turned off, constituting the end of the dispensing episode. Record the final volume meter reading.

9.5 Vehicle Fillpipe Check: Verify that the vehicle meets the vehicle fillpipe specifications using the apparatus described in Section 5.14. Invalidate the data if fillpipe specifications are not met.

9.6 Repeat test sequence in Sections 9.1 through 9.5 until vehicle matrix is filled or until end of test day.

9.7 Phase I Deliveries: All Phase I deliveries occurring after Section 7.2 shall be observed by the Executive Officer.

9.7.1 All Phase I deliveries must be conducted by cargo tanks which have been certified by ARB. ARB certification shall be verified by obtaining a copy of the cargo tank vapor recovery application.

9.7.2 The Phase I vapor recovery system shall be operated during product deliveries so as to minimize the loss of vapors from the facility storage tank which may be under pressure. Provided it is not in conflict with established safety procedures, this shall be accomplished in the following manner:

9.7.2.1 The Phase I vapor return hose is connected to the delivery tank and to the delivery elbow before the elbow is connected to the facility storage tank;

9.7.2.2 The delivery tank is opened only after all vapor connections have been made, and is closed before disconnection of any vapor return hoses; and

9.7.2.3 The vapor return hose is disconnected from the facility storage tank before it is disconnected from the delivery tank.

9.7.2.4 Phase I deliveries shall be accomplished so as to ensure that there is at least one vapor connection between the cargo tank compartment headspace and the storage tank associated with the product delivery. There shall be no more than two product hoses used with one vapor hose connected, and no more than three product hoses used with two vapor hoses connected.

9.8 Data Recording: In addition to the data collection described above, the tester shall record the following parameters at the minimum frequency set forth below.

9.8.1 Ambient Temperature: Hourly

9.8.2 Ambient Barometric Pressure: Hourly

9.8.3 Station throughput (gallons dispensed to vehicles):

9.8.3.1 Daily

9.8.3.2 Between start and stop of testing intervals

10. END OF TEST DAY PROCEDURES

Several test days are normally necessary to complete the vehicle test matrix. These procedures are required at the end of each test day.

~~10.1 System Bias Checks: Conduct for all analyzers used that test day. Perform the sampling system bias check by alternately introducing zero gas and the calibration gas at the probe. Operate the system at the normal sampling rate and make no adjustments to the measurement system other than those necessary to achieve proper calibration gas flow rates through the sampling system to the gas analyzer.~~

~~The test run shall be considered invalid if the difference of zero or calibration gas measured for the bias check in section 10.1 and the zero or calibration gas bias check measured in section 8.3 exceeds ±5% of the range, as determined by equation 10.1.~~

$$\text{Bias} = \frac{(C_a - C_{fb})}{R} x100$$

~~Where:~~

~~C_{fb} = analyzer response for the zero or upscale calibration gas for post run sampling system bias check~~

~~C_a = analyzer response for the zero or upscale calibration for initial analyzer calibration~~

~~R = analyzer range~~

10.~~2~~1 Zero and Calibration Drift: The test run shall be considered invalid if the difference of zero or calibration gas measured for the bias check in section 10.1 and the zero or calibration gas bias check measured in section 8.3 exceeds ±3% of the range as determined by equation 10.2 below.

$$\text{Drift} = \frac{(C_{ib} - C_{fb})}{R} x100$$

Where:

C_{fb} = analyzer response for the zero or upscale calibration gas for post run sampling system bias check

C_{ib} = analyzer response for the zero or upscale calibration for initial system bias check

R = analyzer range

10.~~3~~2 Pressure Measurement Devices: Following each day of testing, record the pressure measuring device(s) response to the pressure generated by a static pressure calibrator at 0, 40, and 80% of the specified range of operation. If necessary, adjust the instrument response in accordance with the manufacturer's instructions. Provide a copy of these instructions and document the instrument response before and after adjustment in the Certification Test Report.

10.~~4~~3 RVP Samples. If required by the Executive Officer, take samples of each gasoline grade in accordance with Section 2296 of title 13,CCR.

10.~~5~~4 Log. Summarize the day's testing activities and document any problems encountered during testing in the testing log.

11. POST-TEST PROCEDURES

The test is completed when valid measurements have been recorded for each vehicle in the matrix. After completing the daily post-test activities in Section 10, continue as follows:

11.1 System Bias Checks: Conduct for all analyzers used that test day. Perform the sampling system bias check by alternately introducing zero gas and the calibration gas at the probe. Operate the system at the normal sampling rate and make no adjustments to the measurement system other than those necessary to achieve proper calibration gas flow rates through the sampling system to the gas analyzer.

The test run shall be considered invalid if the difference of zero or calibration gas measured for the bias check in section 10.1 and the zero or calibration gas bias check measured in section 8.3 exceeds ±5% of the range, as determined by equation 10.1.

$$Bias = \frac{(C_a - C_{fb})}{R} x100$$

Where:

C_{fb} = analyzer response for the zero or upscale calibration gas for post run sampling system bias check

C_a = analyzer response for the zero or upscale calibration for initial analyzer calibration

R = analyzer range

~~11.1~~ **11.2** Prior to dismantling test equipment, conduct a pressure decay test as specified in TP-201.3. **This test shall be conducted as soon as possible, but not more than 48-hours, after completion of the TP-201.2 test. Failure of the prethis test pressure decay test shall invalidate the TP-201.2 test unless the Executive Officer determines that the integrity failure did not result in any significant unmeasured emissions.**

~~11.2~~ **11.3** Dismantle equipment. Remove testing apparatus and carefully reconnect system plumbing to original configuration.

~~11.3~~ **11.4** Pressure Decay Test. Conduct a pressure integrity test using TP-201.3. Initiate corrective action until meet TP-201.3 requirements.

12. CALCULATING RESULTS

Data from each test point is used to determine a mass emission factor in lbs/1000 gallons. Efficiency is calculated using the mass emission factors and the mass of vapor returned per 1000 gallons dispensed.

12.1 Test Point 1 - Nozzle Sleeve

An emission factor in lbs hydrocarbon/1000 gallons dispensed is calculated for each fueling. Overall emission factors are also calculated for ~~ORVR vehicles, non-ORVR vehicles and~~ the entire vehicle matrix.

12.1.1 The sample volumes shall be corrected to standard conditions for each dispensing episode as shown in Equation 12.1.1.

$$V = V_m \times \left(\frac{528}{T}\right) \times \left[\frac{P_{bar}\left(\frac{P}{13.6}\right)}{29.92}\right] \qquad \text{Equation 12.1.1}$$

where:

V = volume corrected to standard conditions (ft^3).

V_m = measured volume (ft^3).

P_{bar} = barometric pressure (in. Hg).

P = meter pressure (inches water column).

T = meter temperature (^oR).

12.1.2 The mass emission factor for each dispensing episode shall be calculated as follows:

$$M_{rate} = \frac{(V_i)(C_i)(MW)(1{,}000)}{(385)(G_i)} \qquad \text{Equation 12.1.2}$$

where:

M_{rate} = emission factor for dispensing episode *i* (lb HC/1,000 gallons)

V_i = volume for dispensing episode *i* corrected to standard conditions (ft^3).

C_I = hydrocarbon concentration for dispensing episode *i* (volume fraction, i.e. ppm_v / 10^6 or Volume % / 10^2)

MW = molecular weight of HC analyzer calibration gas (lb/lb-mole) e.g., 44 for propane

385 = standard volume (ft^3) of one lb-mole of ideal gas at standard temperature and pressure (528^oR and 29.92 in. Hg)

G_i = gallons dispensed for dispensing episode i.

1,000 = Conversion factor to 1,000 gallons

12.2 Test Point 2. Vapor Return Line

The vapor return line data is not needed to calculate the emission factor, but is necessary to calculate the system efficiency.

12.2.1 Calculate the standard volume of vapor returned for each dispensing episode as shown in Equation 12.1.1.

12.2.2 Calculate the vapor returned in lbs/1000 gallons dispensed as shown in Equation 12.1.2.

12.3 Test Point 3. Vent Sleeve

The vent emissions shall be calculated over the time periods specified by the ARB Executive Officer. Knowledge of the total station gasoline throughput for the specified time period is necessary to calculate the emission factor.

12.3.1 Calculate the standard volume sampled over the time interval using Equation 12.1.1.

12.3.2 Calculate the emission factor in lbs/1000 gallons dispensed over the time interval selected using Equation 12.1.2.

12.4 Test Point 4 Processor

12.4.1 If a volume meter is used at Test Point 4_{outlet}, calculate the standard volume sampled of the time interval using Equation 12.1.1.

12.4.2 If a volume meter is used at Test Point 4_{inlet}, calculate the exhaust volume flow rate using USEPA Method 2B.

12.5 Test Point 5 Pressure-Related Fugitives: Calculate the emission factor as specified in TP-201.2F.

12.6 Phase II System Emission Factor: Calculate the Phase II system emission factor using Equation 12-6.

$$M_{total} = M_1 + M_3 + M_4 + M_5$$

Where: M_{total} = Phase II emission factor, lbs/1000 gallons
M_1 = Mass emission factor at Test Point 1, lbs/1000 gallons
M_3 = Mass emission factor at Test Point 3, lbs/1000 gallons
M_4 = Mass emission factor at Test Point 4, lbs/1000 gallons
M_5 = Mass emission factor at Test Point 5, lbs/1000 gallons

12.7 Phase II System Efficiency: Calculate the Phase II system efficiency using Equation 12-7.

$$EFF = 1 - \frac{(M_1 + M_3 + M_4 + M_5)}{(M_1 + M_2)} \times 100$$

Where: M_2 = Mass emission factor at Test Point 2, lbs/1000 gallons

13. REPORTING RESULTS

All data, forms, calculations and other test documentation shall be included in a

test report.

14 ALTERNATIVE PROCEDURES

14.1 This procedure shall be conducted as specified. Any modifications to this test procedure shall not be used for certification unless prior written approval has been obtained from the ~~ARB~~ Executive Officer, pursuant to Section 14 of Certification Procedure CP-201 or Section 15 of Certification Procedure CP-206.

FIGURE 1
TP-201.2 TEST POINTS

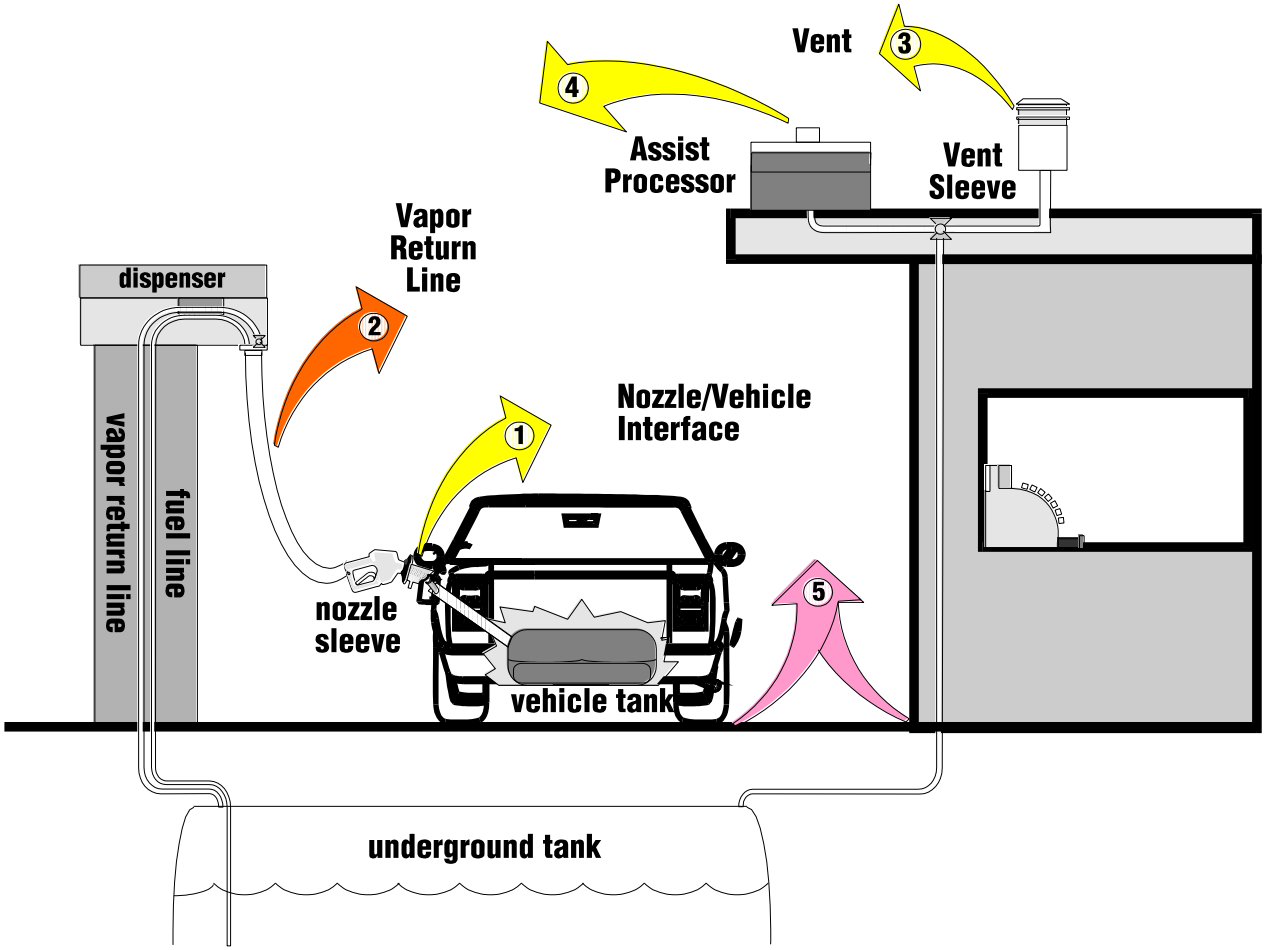

FIGURE 2
VEHICLE LEAK CHECK PROCEDURE (NITROGEN FLOW PRESSURIZATION)

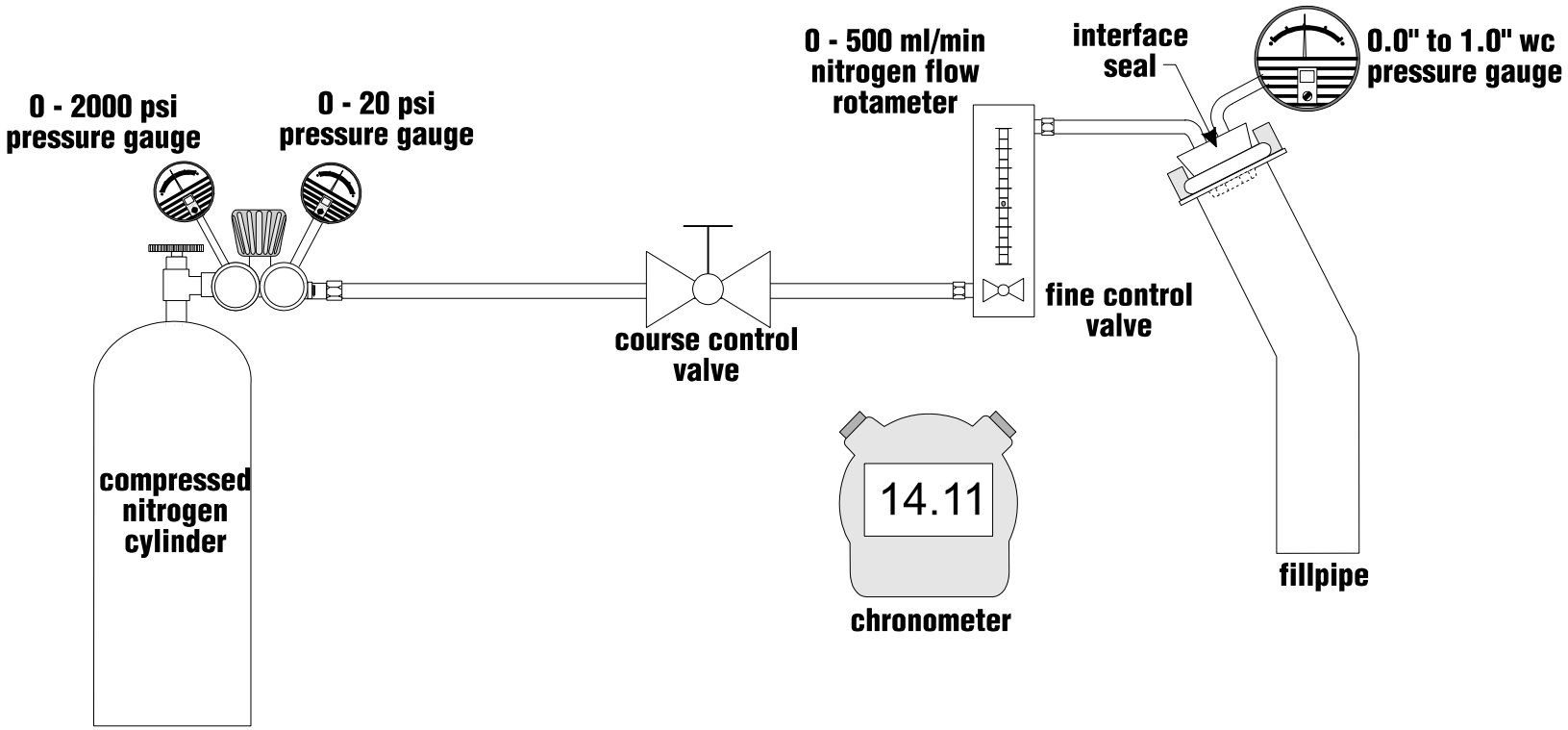

FIGURE 3
NOZZLE SLEEVE ASSEMBLY (SECTIONAL VIEW)

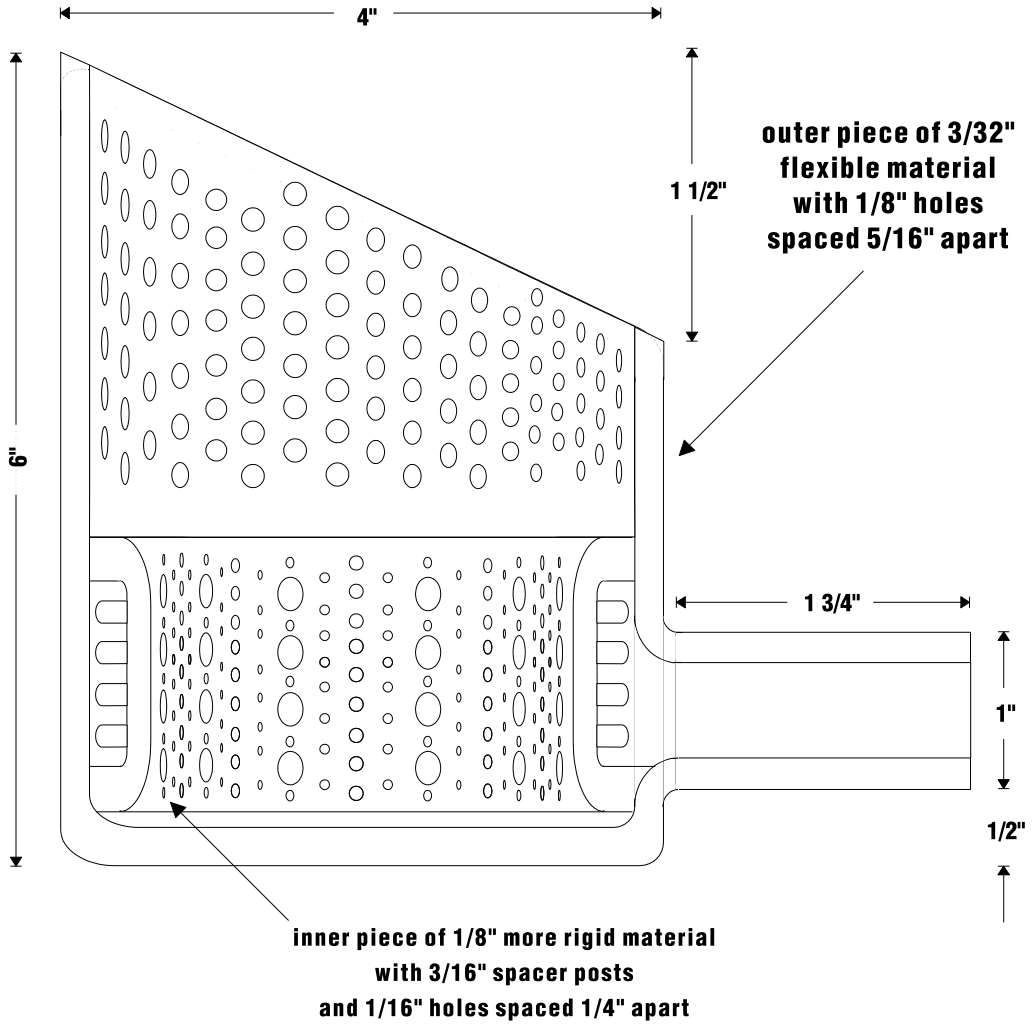

these dimensions are for example, and are not specifications

FIGURE 4
NOZZLE SLEEVE ASSEMBLY (AXIAL VIEW)

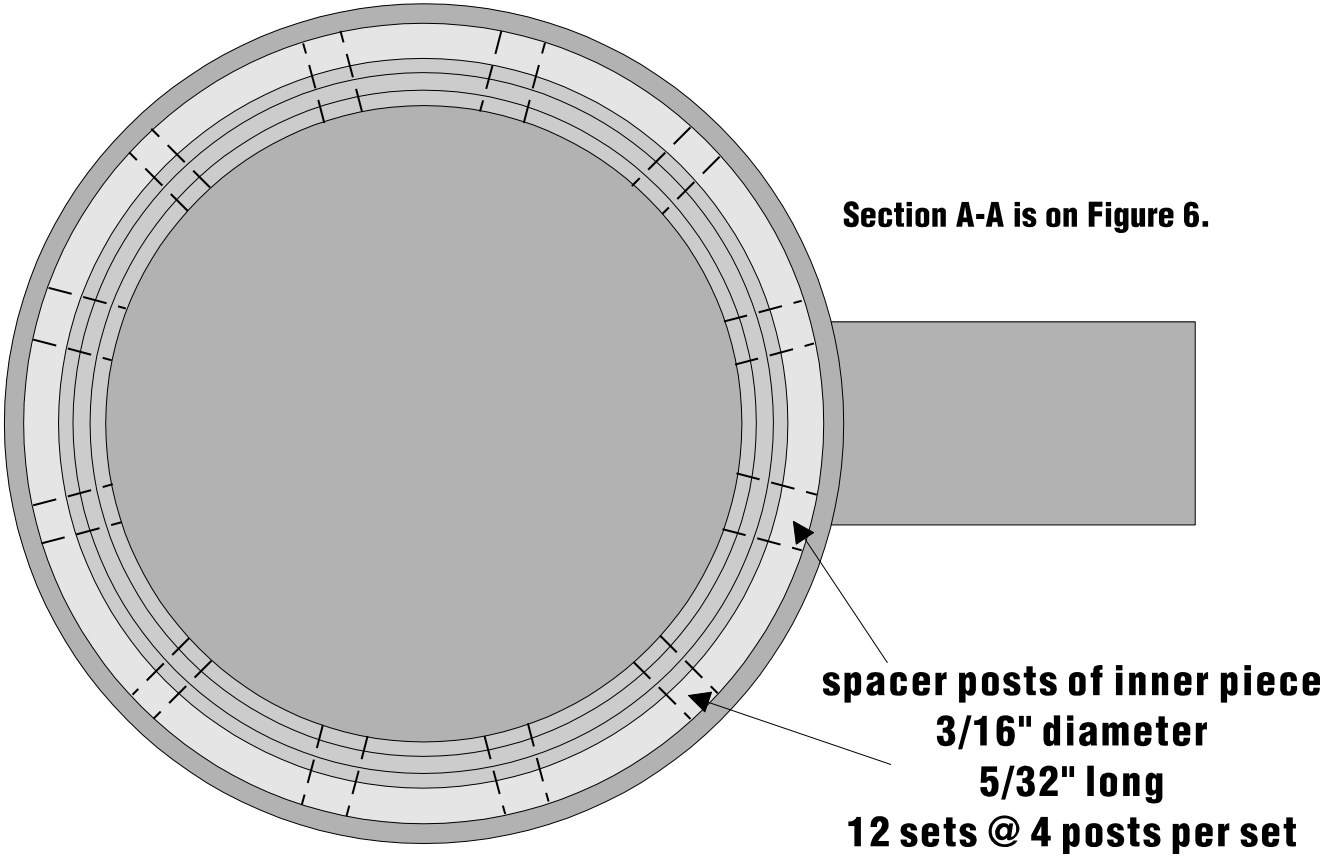

Materials must be resistant to breakdown by fuels and additives and easily bonded and repaired.

FIGURE 5
NOZZLE SLEEVE ASSEMBLY INSTALLED ON DISPENSING NOZZLE AT TEST POINT 1

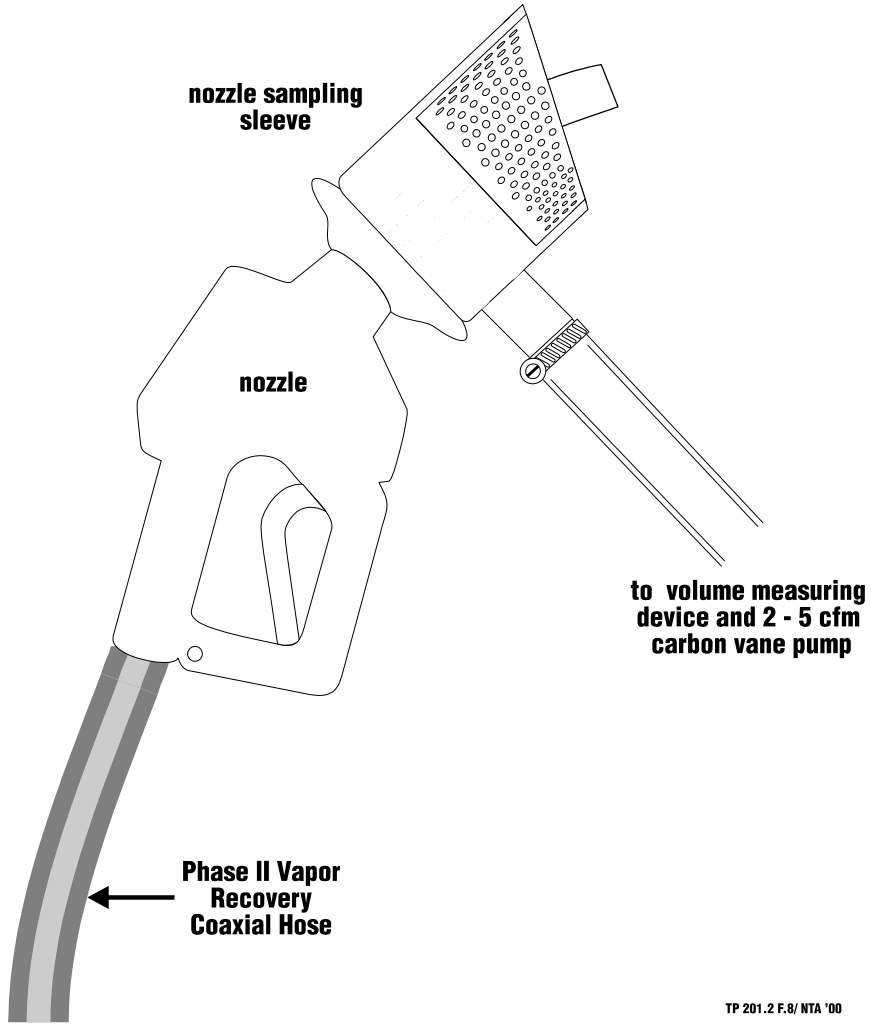

FIGURE 6
COMBUSTIBLE GAS DETECTOR USED FOR SLEEVE LEAK CHECKS

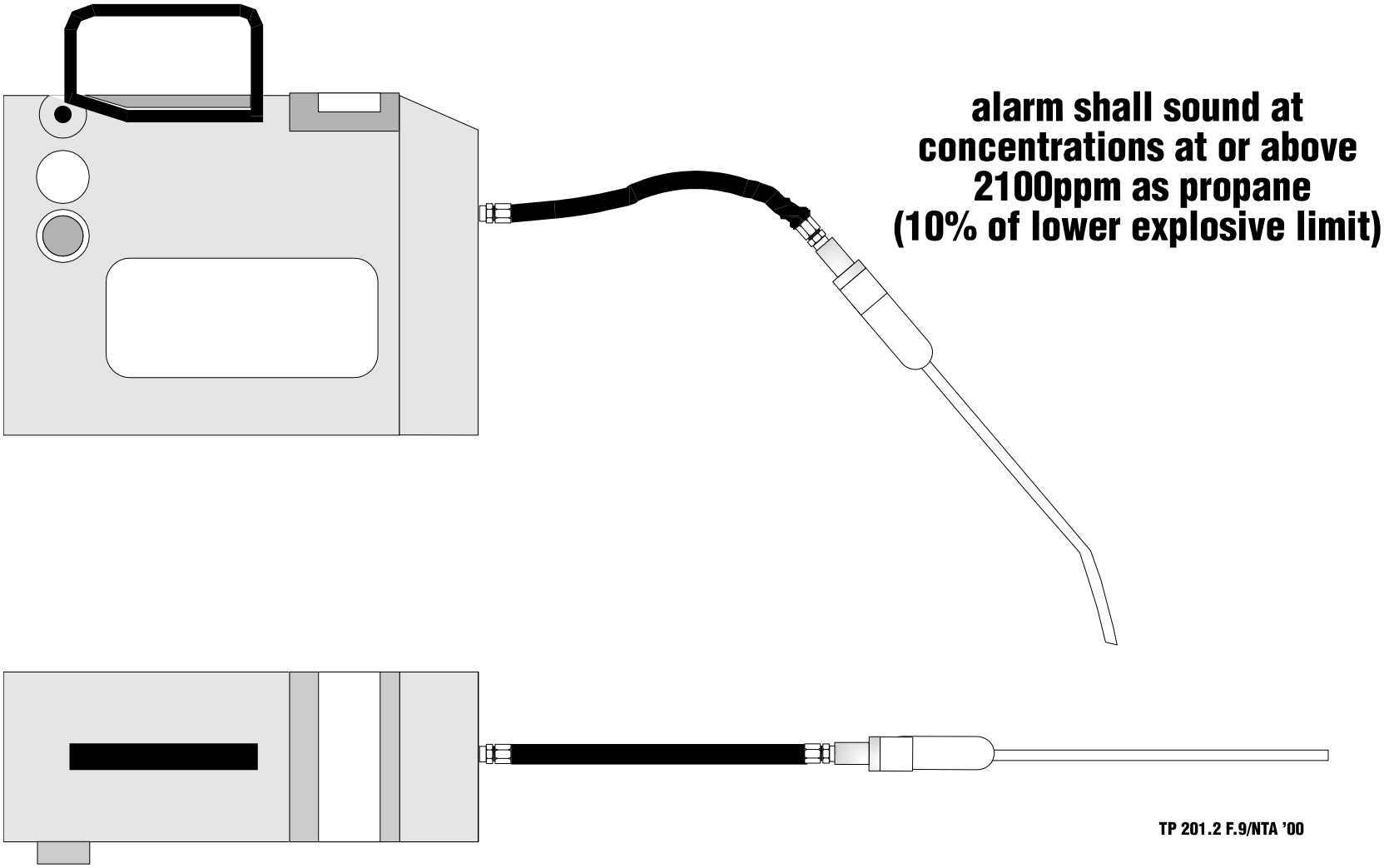

FIGURE 7
COMBUSTIBLE GAS DETECTOR IN USE DURING NOZZLE SLEEVE LEAK CHECK

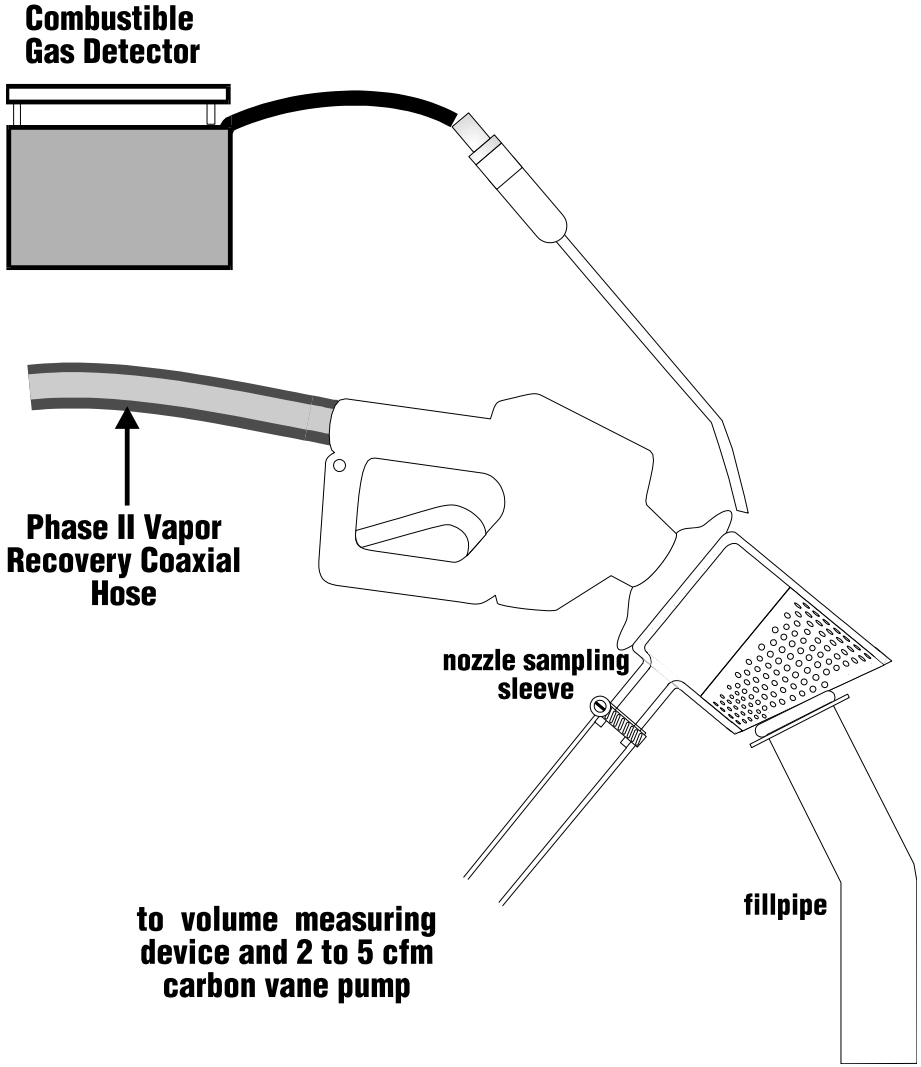

FIGURE 8
VAPOR RETURN LINE VOLUME MEASUREMENTS

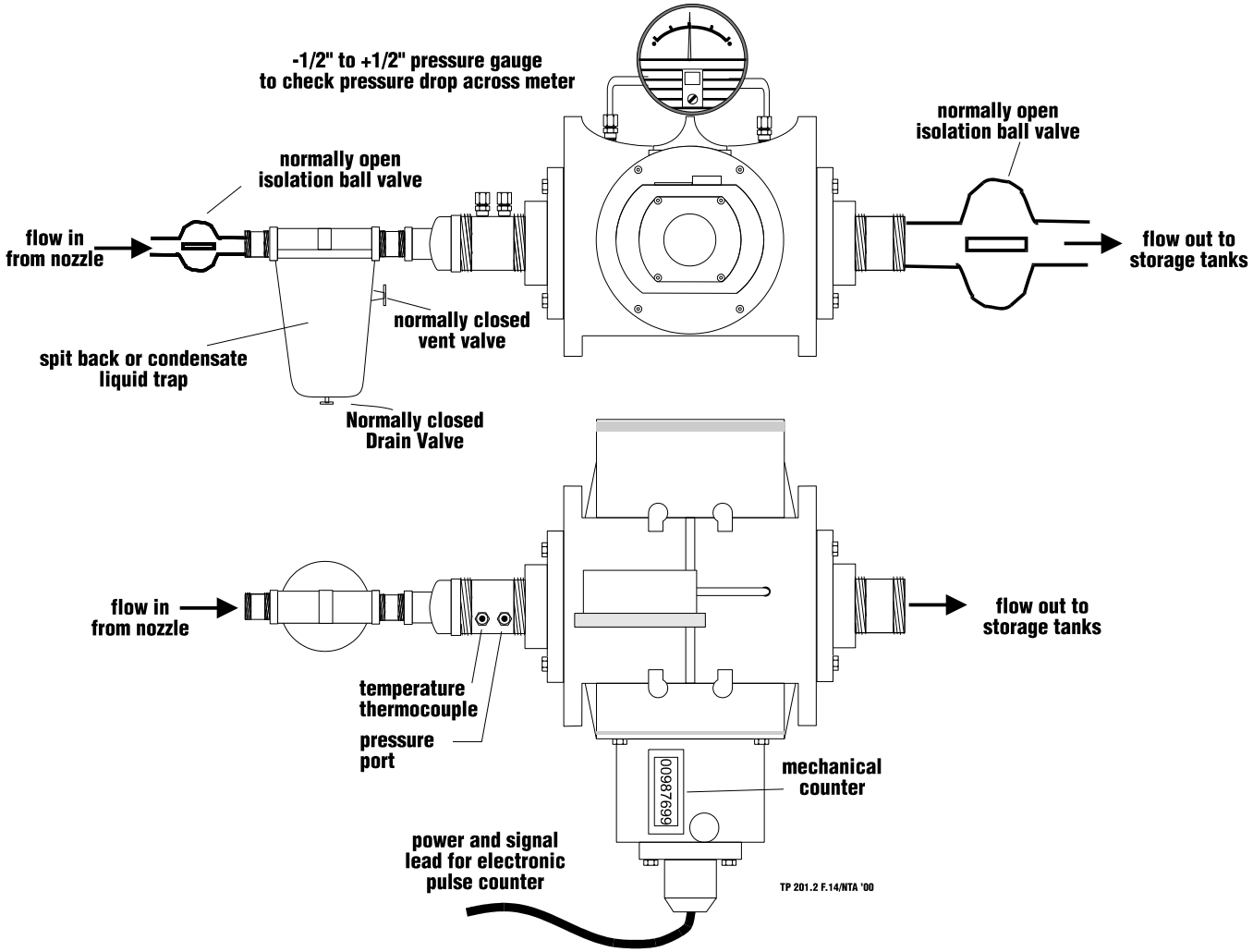

FIGURE 9
VAPOR RETURN LINE VOLUME MEASUREMENTS (SINGLE VR LINE)

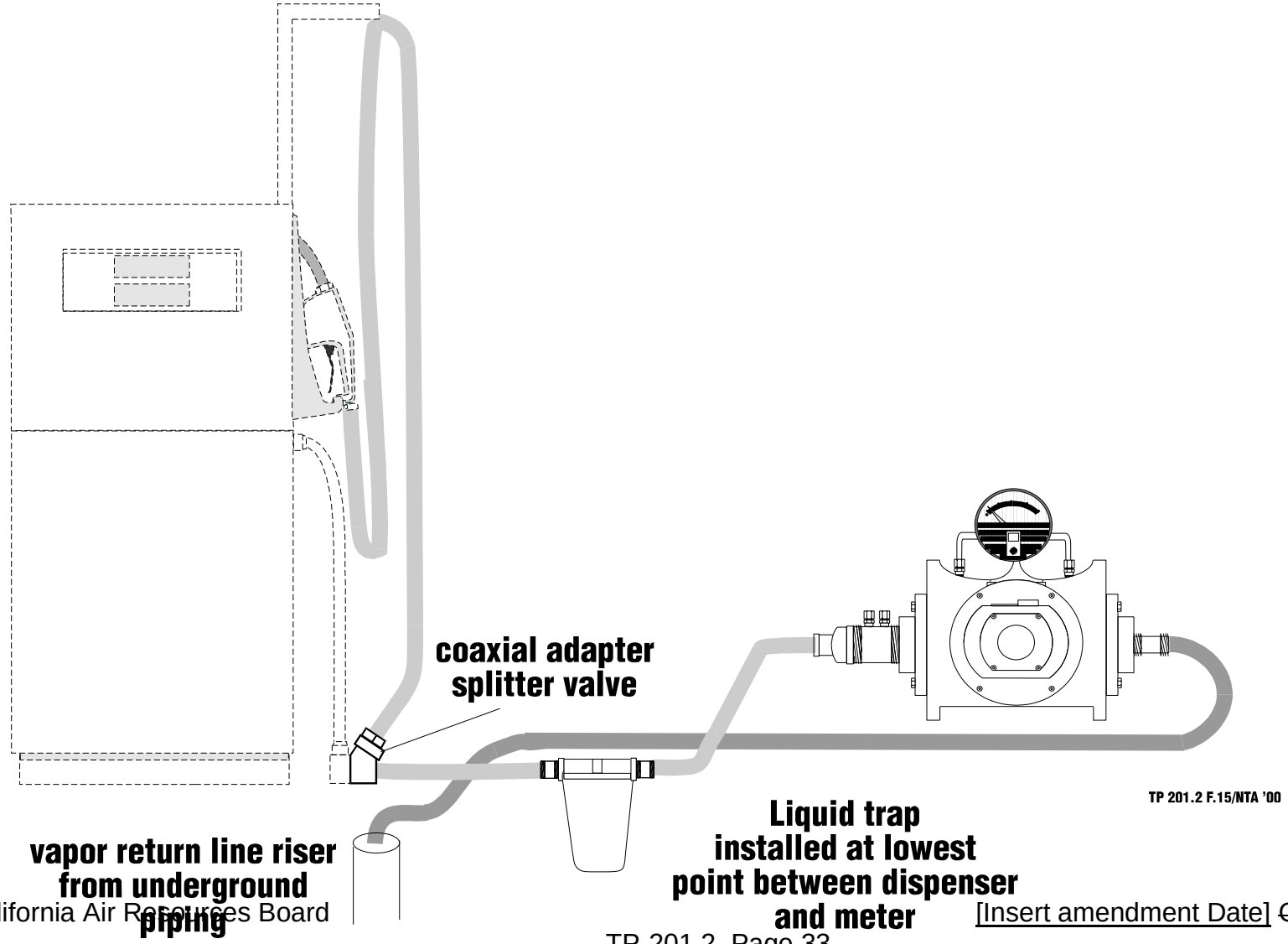

FIGURE 10
VAPOR RETURN LINE VOLUME MEASUREMENTS (VR LINES CONNECTED BY MANIFOLD)

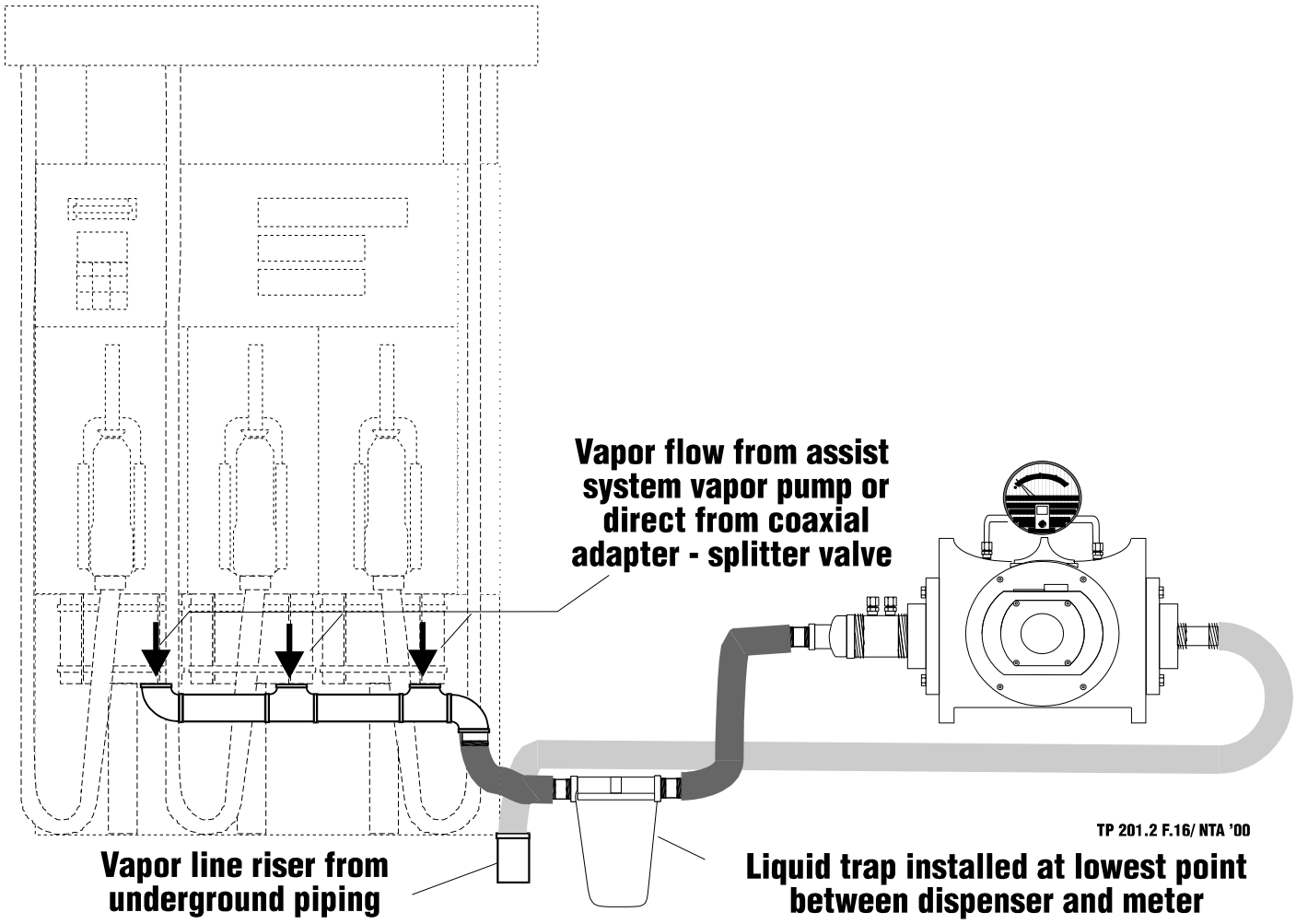

FIGURE 11
VAPOR RETURN LINE HC CONCENTRATION MEASUREMENTS

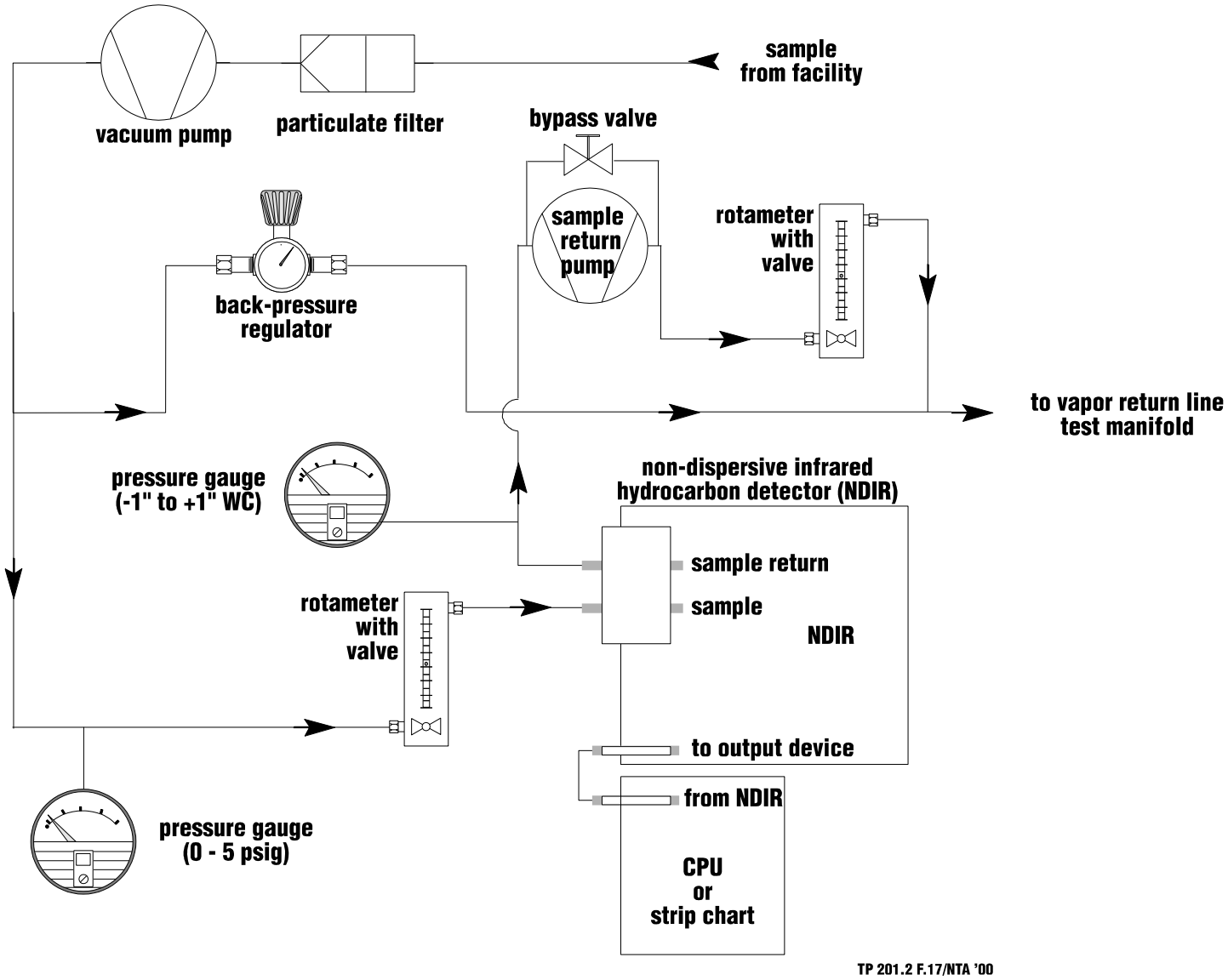

FIGURE 12
UST VENT PIPE SLEEVE ASSEMBLY

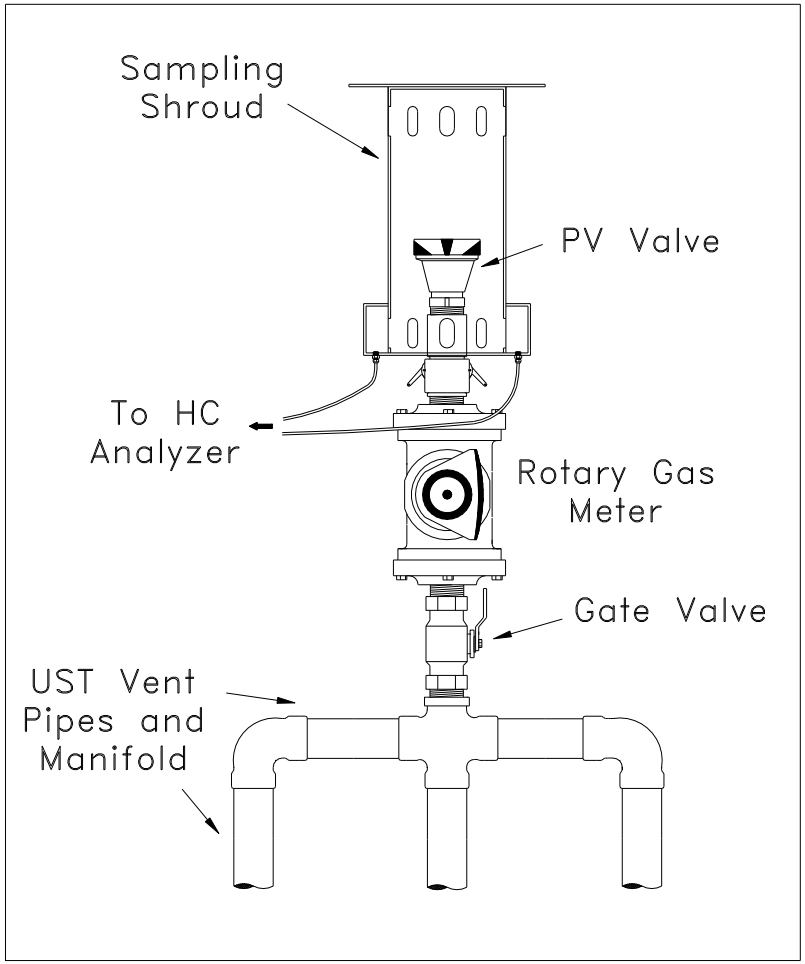

Figure 13 Test Site Vapor Recovery Equipment

Phase I Components

Fill Adapter Brand	Model	Serial	Installation Date	Warranty Exp. Date

Vapor Adapter Brand	Model	Serial	Installation Date	Warranty Exp. Date

Fill Cap Brand	Model	Serial	Installation Date	Warranty Exp. Date

Vapor Cap Brand	Model	Serial	Installation Date	Warranty Exp. Date

Drop Tube Brand	Model	Serial	Installation Date	Warranty Exp. Date

Spill Bucket Brand	Model	Serial	Installation Date	Warranty Exp. Date

Overfill Brand	Model	Serial	Installation Date	Warranty Exp. Date

PV Valve Brand	Model	Serial	Installation Date	Warranty Exp. Date

Other	Model	Serial	Installation Date	Warranty Exp. Date

Other	Model	Serial	Installation Date	Warranty Exp. Date

Phase II Components

Dsp. #	**Other**	Model	Serial	Installation Date	Warranty Exp. Date
1					
2					
3					
4					
5					
6					
7					
8					
9					
10					

Dsp. #	**Other**	Model	Serial	Installation Date	Warranty Exp. Date
1					
2					
3					
4					
5					
6					
7					
8					
9					
10					

Other	Model	Serial	Installation Date	Warranty Exp. Date

Other	Model	Serial	Installation Date	Warranty Exp. Date

FIGURE 14

VEHICLE REFUELING DATA SHEET

TP-201.2
DATA SHEET FOR TEST POINT 1

TEST ID: _____DATE: _____ DATA RECORDED BY:

VEHICLE INFORMATION

VEH.NO.	MAKE	MODEL	YEAR	MATRIX CATEGORY	ORVR?	TIME IN

REFUELING TEST DATA

LIQUID IN TRAP (N/Y [ml])	VEHICLE LEAK (cfm)	VEHICLE LEAK (P/F)	GAS GRADE	SLEEVE LEAK (P/F)	FUEL VOL (GAL)	FUELING TIME (SEC)	SLEEVE LIQUID (P/F[ml])	DISP RATE (GAL/MIN)

VOLUME METER READINGS

INITIAL METER (ACF)	FINAL METER (ACF)	METER TEMP (°F)	METER PRESSURE (IN H2O)

COMMENTS:

California Environmental Protection Agency

Air Resources Board

PROPOSED

Vapor Recovery Test Procedure

TP-201.2A

DETERMINATION OF VEHICLE MATRIX FOR PHASE II SYSTEMS

Adopted: April 12, 1996
Amended: February 1, 2001
Amended: [Insert amendment date]

Note: The text is shown in ~~strikeout~~ to indicate that it is proposed for deletion and underline to indicate that it is proposed for addition. [Bracketed text] is not part of the proposed amendment.

CALIFORNIA ENVIRONMENTAL PROTECTION AGENCY
AIR RESOURCES BOARD

Vapor Recovery Test Procedure~~s~~

TP-201.2A

Determination of Vehicle Matrix for Phase II Systems

1 Applicability

Definitions common to all certification and test procedures are in:

D-200 Definitions for Vapor Recovery ~~Test~~ Procedures

For the purpose of this procedure, the term "CARB or ARB" refers to the ~~State of~~ California Air Resources Board, and the term "~~ARB~~ Executive Officer" refers to the ARB Executive Officer ~~of the ARB~~ or his or her authorized representative or designate.

This test procedure can be used to determine the characteristics of a test fleet of vehicles which, when tested by other test procedures, can yield data representative of the total vehicle fleet. For the purpose of ARB Test Procedure (TP)-201.2, Efficiency and Emission Factor for Phase II Systems, the test fleet shall consist of vehicles which do not have on-board refueling vapor recovery (ORVR).

2 Principle and Summary of Testing Procedure

A representative matrix of vehicle counts in various categories is calculated from registered vehicle data and other information. Vehicles are categorized by model year and by make and/or vehicle type. The number of vehicles specified in the matrix for each category is such that the average number of miles traveled in California by vehicles in each category is substantially similar.

3 Biases and Interferences

The number of vehicle miles traveled is not identical to the amount of gasoline used by vehicles in a category because gasoline consumption per mile will vary. ~~Correction for differences in gasoline consumption rate is considered impractical. It is a~~Also, ~~impractical to calculate a~~the matrix cells have been adjusted so that model years that have a mix of ORVR and non-ORVR vehicles are grouped together in the same cell. ~~where the vehicle miles traveled in each category is identical because of the need to round values off to integer vehicle counts in the matrix and include entire model years in categories.~~

4 Calculating the Vehicle Matrix

The criteria defining vehicle categories and the information on which calculations are based shall be chosen as reasonable and appropriate for the purposes described in sections 1 and 2. The same matrix shall be used for all testing performed in any calendar year, except that the Executive Officer may approve an alternative matrix to be used in special cases where a vapor recovery system is demonstrated to serve a vehicle population substantially different from the California vehicle population as a whole.

The vehicle makes and types, and models, and the number of vehicles per cell in the examples below are for illustration purposes only. More cells and other models, or vehicle makes and/or types, and different numbers of vehicles or categories shall be included at the discretion of the ~~ARB~~ Executive Officer.

The calculation procedures described below are illustrative only and other reasonable and appropriate procedures may be specified or approved by the Executive Officer provided only that the resulting matrix delineates a diverse and representative variety of vehicles and vehicle counts are determined considering estimated vehicle miles traveled by vehicles in each category.

At the Executive Officer's discretion, testing of any particular vapor recovery system may be required to include, in addition to the vehicle matrix, a supplementary list of vehicles or vehicle categories having features or equipment which may pose particular challenges or incompatibilities with that vapor recovery system.

4.1 Obtain Vehicle Make, Model, and Type Information

Obtain the number of vehicles in various categories from an appropriate source such as annual reports from the California Department of Motor Vehicles. An example of data for automobile categories defined by model year and make is illustrated in Table 1.~~by the following:~~

Table 1 - Number of Vehicles

Model Year	Chrysler	Ford	GM	Toyota	Honda	Other	Total
~~1991~~	~~109,563~~	~~344,867~~	~~334,974~~	~~218,577~~	~~191,174~~	~~378,731~~	~~1,577,886~~
~~1990~~	~~138,427~~	~~352,293~~	~~323,953~~	~~203,156~~	~~189,973~~	~~460,906~~	~~1,668,708~~
2002	203,397	447,947	483,019	407,384	272,205	733,610	2,547,562
2001	228,930	491,262	499,856	400,682	279,396	752,566	2,652,702
etc.							

4.2 Obtain Vehicle Miles Traveled Information By Model Year

Obtain data for the projected values for the number of vehicle miles traveled or

percent of vehicle miles traveled in various model years expected in the current calendar year from an appropriate source such as projected values provided by ARB's Emission Factors Model (EMFAC)~~ modeling program~~. Include only gasoline fueled vehicles. An example of such data is illustrated in Table 2.~~by the following:~~

Table 2
Percent of Vehicle Miles Traveled by Vehicle Model Year

Model Year	Percent of Vehicle Miles Traveled
2010	0/9
2009	3.0
2008	4.6
2007	5.7
2006	5.9
2005	5.7
2004	5.9
2003	5.6
2002	5.4
2001	5.7
~~1991~~	~~6.9~~
~~1990~~	~~10.5~~
~~1989~~	~~10.7~~
~~1988~~	~~10.3~~
~~1987~~	~~9.3~~
~~1986~~	~~8.2~~
~~1985~~	~~7.4~~
Etcetera (percentage should add up to 100)	

4.3 Calculate Estimated Vehicle Miles Traveled for Each Make and/or Type Category and Each Model Year

Calculate the estimated vehicle miles traveled or percentage of vehicle miles traveled for each category of vehicle make or type in each model year using the data obtained above. For example, ~~calculate that because~~ there were 203,397 2002 ~~109563 1991~~ model Chrysler vehicles and ~~1,577,886 total 1991~~ 2,547,562 total 2002 model vehicles, and projected vehicle miles traveled for 2002 ~~1991~~ vehicles is ~~6.9%~~5.4% of all vehicle miles traveled.~~,~~ From this data the projected percentage of vehicle miles traveled by ~~1991~~ 2002 model Chrysler vehicles is calculated to be 0.43% (5.4%x(203,397/2,547,582))~~will be 6.9% x (109563/1577886) or 0.4791%~~.

4.4 Calculate the Cumulative Percentage of Vehicle Miles Traveled for each Model Year

Calculate the number of vehicle miles traveled in each model year as a percentage of vehicle miles traveled in all model years and, for each model year,

the cumulative percentage of vehicle miles traveled by vehicles as new or newer than vehicles in that model year. The following table is an example calculations of the cumulative percent of vehicle miles traveled for 2010.

Model Year	Percent of Total	Cumulative Percent
2010	0.9	0.9
2009	3.0	3.9
2008	4.6	8.5
2007	5.7	14.2
2006	5.9	20.1
2005	5.7	25.8
2004	5.9	31.7
2003	5.6	37.3
2002	5.4	42.7
2001	5.7	48.4
~~1991~~	~~6.9~~	~~6.9~~
~~1990~~	~~10.5~~	~~17.4~~
~~1989~~	~~10.7~~	~~28.1~~
~~1988~~	~~10.3~~	~~38.4~~
~~1987~~	~~9.3~~	~~47.7~~
~~1986~~	~~8.2~~	~~55.9~~
~~1985~~	~~7.4~~	~~63.3~~
Etc.		

4.5 Divide Model Years into Category Groups

Using the cumulative percentages of vehicle miles traveled previously calculated for each model year, divide the model years into groups each representing approximately the same percentage of vehicle miles traveled but group together the transition model years which include both ORVR and non-ORVR vehicles. ~~As an illustrative example~~For example, divide ~~ing~~ model years into ~~5~~4 groups such as 1966-1990, 1991-1997, 1998-2005, and 2006-2010. Although these groups are not equal, they can be used to create a non-ORVR vehicle test matrix. Table 3 shows that model years before 1998 have only non-ORVR vehicles, model years 1998-2005 have both ORVR and non-ORVR vehicles, and model year 2006 and later have only ORVR vehicles. ~~each representing approximately 20% of vehicle miles traveled would be done as follows using the example data above: 1990-1991 model years represent 17.4% of vehicle miles traveled, 1988-1989 model years represent 21.0%, 1985-1987 model years represent 24.9% of vehicle miles traveled, etc. Trial and error selection of model years may be necessary to arrive at an arrangement with the most equal division of vehicle miles traveled in each category group of model years. Do not subdivide model years. The groups will normally represent percentages of vehicle miles traveled which are only approximately equal.~~

Table 3
Federally Mandated Phase-In Schedule for ORVR Vehicles

Vehicle Category	**Model Year**			
	Non-ORVR Vehicles	**40% ORVR**	**80% ORVR**	**100% ORVR**
Passenger Cars	1997 and earlier	1998	1999	2000
Light Duty Trucks ≤6,000 pounds gross vehicle weight rating (GVWR)	2000 and earlier	2001	2002	2003
Medium Duty Vehicles and Light Heavy Duty Trucks 6,000 to 10,000 GVWR	2003 and earlier	2004	2005	2006
Source: U.S. Code of Federal Regulations (CFR), Title 40, Part 86				

4.6 Calculate Percentage of Vehicle Miles Traveled In Each Model Year Category by Vehicles in Each Vehicle Make or Type Category

Sum the percentage of vehicle miles traveled for each category of vehicle in each model year category. For example ~~using data above, because 1991~~ 2002 Chrysler vehicles represent ~~0.4791%~~ 0.43% of total vehicle miles traveled and ~~1990~~ 2001 Chrysler vehicles represent 0.49% ~~0.8710%.,~~ When these percentages ~~the total percentage~~ of vehicle miles traveled by Chrysler vehicles are added together with the percentages of Chrysler vehicle miles for model year 1998, 1999, 2000, 2003, 2004, and 2005, the total percentage for Chrysler for the ~~1990-1991~~ 1998-2005 model year category is 3.5% ~~1.3501%~~.

4.7 Calculate the Vehicle Count Matrix

For the purpose of TP-201.2, the test fleet shall consist of non-ORVR vehicles only. Therefore, remove the categories for model years after 2005, since 2005 is the last year that non-ORVR vehicles with GVWR less than 10,000 pounds were manufactured. During the model years, 1998 through 2005, ORVR vehicles were phased in, as shown in Table 3. Use information from Table 3 and EMFAC to determine the likely percentage of non-ORVR vehicles in the model-years 1998-2005. For example, the likely percentage of non-ORVR vehicles in the model year 1998 is about 79% and the likely percentage of non-ORVR vehicles in 2005 is 2%. Multiply the percentage of vehicle miles travelled in the 1998-2005 model year category groups by the likely percentage of non-ORVR vehicles for these years. Select a constant AK@ with a value of approximately 2. Calculate a count of non-ORVR vehicles to be tested in each category of vehicle make or type and each model year range by rounding off the product the constant AK@and the percentage of vehicle miles traveled by vehicles in that category of make or type

and model year range. Calculate the total of the resulting counts of vehicles in all categories of vehicle make or type and all model year ranges ~~(the total will be approximately 200)~~. Adjust the value of the constant AK@ in small increments by trial and error, and recalculate the total, until the total is exactly ~~200~~ 100. This is best done using a spreadsheet program.

Table 4 is an ~~An illustrative~~ example of a non-ORVR vehicle test matrix. The first row in Table 4 includes the model years 1998-2005, during which both ORVR and non-ORVR vehicles are manufactured. The matrix must include 21 non-ORVR vehicles manufactured between 1998 and 2005. Since vehicles manufactured after 2005 are all equipped with ORVR, these newer vehicles are not included in the test matrix. ~~completed table of vehicle counts is shown below.~~

~~1992 200 VEHICLE MATRIX~~							
~~Model Yr~~	~~Chrysler~~	~~Ford~~	~~GM~~	~~Toyota~~	~~Honda~~	~~Other~~	~~Totals~~
~~89-92~~	~~3~~	~~12~~	~~11~~	~~8~~	~~7~~	~~13~~	~~54~~
~~86-88~~	~~6~~	~~9~~	~~10~~	~~9~~	~~4~~	~~16~~	~~54~~
~~82-85~~	~~5~~	~~9~~	~~11~~	~~6~~	~~4~~	~~13~~	~~48~~
~~77-81~~	~~3~~	~~6~~	~~9~~	~~3~~	~~2~~	~~9~~	~~32~~
~~< 77~~	~~3~~	~~4~~	~~5~~	~~0~~	~~0~~	~~2~~	~~12~~
~~TOTALS~~	~~18~~	~~40~~	~~46~~	~~26~~	~~17~~	~~54~~	~~200~~

Table 4
100 Non-ORVR Vehicles for Test Matrix in 2010

Model Year	**Chrysler**	**Ford**	**G.M.**	**Toyota**	**Honda**	**Nissan/ Datsun**	**VW/ Volvo**	**Others**	**Total**
1998-2005	2	4	4	3	2	2	1	3	21
1991-1997	3	8	8	6	5	1	3	5	39
1990 and earlier	3	7	11	5	3	3	3	5	40
Totals	**8**	**19**	**23**	**14**	**10**	**6**	**7**	**13**	**100**

California Environmental Protection Agency

Air Resources Board

PROPOSED

Vapor Recovery Test Procedure

TP- 201.2I

Test Procedure for In-Station Diagnostic Systems

Adopted: October 8, 2003
Amended: May 25, 2006
Amended: [Insert Amendment date]

Note: The text is shown in ~~strikeout~~ to indicate that it is proposed for deletion and underline to indicate that it is proposed for addition. [Bracketed text] is not part of the proposed amendment.

CONTENTS

1. Purpose and Applicability 1
2. Principle and Summary of Test Procedure 1
3. Biases and Interferences 2
4. Sensitivity, Range and Precision 2
5. Test Equipment 2
6. Preliminary System Evaluation and Inspection 2
   - 6.1 Evaluate Required Documentation of the ISD System (Certification Testing Only) 2
   - 6.2 Verify Standardization of the System Interface 2
   - 6.3 Evaluate Required Uptime Recording and Operational History of the ISD System. 2
   - 6.4 Evaluate Required Recorded ISD System Reports 2
   - 6.5 Evaluate Tampering Protection 3
7. Determination of ISD System Measurement Accuracy and Precision 3
   - 7.1 General Considerations 3
   - 7.2 A/L Ratio Measurement (Assist Systems Only) 3
   - 7.3 Vapor Flow Performance Measurement (Balance Systems Only) 4
   - 7.4 UST Pressure Measurement (Phase I and II Operations) 4
   - 7.5 Leak Rate Measurement 5
   - 7.6 Central Vacuum System Measurements 5
   - 7.7 Vapor Processor Measurements 5
8. Statistical Calculations 6
   - 8.1 Calculation of Error and Normalized Error 6
   - 8.2 Mathematical Characterization of Error Distributions 6
   - 8.3 Determining the Number of Measurements “n_{ACT}” or “n_{BORD}” Upon which an ISD System Decision is Based 7
   - 8.4 Calculation of 5%-probable Error Magnitude 7
   - 8.5 Calculation of 1%-probable Error Magnitude 8
   - 8.6 Calculation of Action Criterion Values V_{ACT} and Action Test Values V_T 8
   - 8.7 Calculation of Borderline Operation Values V_{BORD} and Action Test Values V_T ... 9
9. Testing Proper ISD System Operation Including Generation of Automatic Alarms and Actions 11
   - 9.1 General Considerations 11
   - 9.2 Appropriateness of Generated Alarms 11
   - 9.3 System Startup and Restart 11
   - 9.4 Sensor Failure Detection 11
   - 9.5 A/L Gross Failure Response (Assist Systems Only) 12
   - 9.6 A/L Degradation Response (Assist Systems Only) 12
   - 9.7 Reduced Vapor Collection Flow Performance (Balance Systems Only) 12
   - 9.8 Central Vacuum System Failure (Systems so equipped only) 13
   - 9.9 UST Ullage Pressure - Gross Failure Response 13
   - 9.10 UST Ullage Pressure - Degradation Response 14
   - 9.11 UST Ullage Pressure - Pressure Integrity Failure (Leakage) Response 14
   - 9.12 Vapor Processor Malfunction Response (Systems so equipped only) 15
10. Alternative Test Procedures 16

California Environmental Protection Agency
Air Resources Board

Vapor Recovery Test Procedure

TP-201.2I

Test Procedure for In-Station Diagnostic Systems

Definitions common to all certification and test procedures are in:

D-200 Definitions for Vapor Recovery Procedures

For the purpose of this procedure, the term "CARB or ARB" refers to the California Air Resources Board, and the term "Executive Officer" refers to the CARB Executive Officer or his or her authorized representative or designate.

1. PURPOSE AND APPLICABILITY

This test procedure provides a certification method to determine whether the in-station diagnostic (ISD) requirements specified in Certification Procedure 201 (CP-201) and Certification Procedure 206 (CP-206) are met.

2. PRINCIPLE AND SUMMARY OF TEST PROCEDURE

Adequacy of required documentation, including, but not limited, to required test and calibration procedures, is evaluated. The accuracy and precision of measurements made by the ISD system are evaluated based on comparison of ISD system measurements to measurements made using standard test methods, including measurements (where applicable) of (1) air-to-liquid (A/L) ratio (liquid and vapor volumes), (2) vapor collection flow performance (liquid and vapor volumes), (3) central vacuum pump vacuum, (4) underground storage tank (UST) ullage pressure and pressure decay rates, (5) vapor processor function, and (6) other measurement parameters as described in CP-201. Compliance with interface and communications capabilities requirements is tested by connection to, and communication with, the system. Generation of required alarms and actions and response to manual override of interrupted dispensing, is tested by practical tests in which failures are artificially induced, or by software or electrical simulation of failure conditions, or both. Compliance with required up-time percentages is determined by review of operational data. Statistical probabilities of generating required alarms and actions and, of generating false alarms when a vapor recovery system is operating in compliance, are calculated based on accuracy and precision of ISD system measurements compared to standard test procedures and on review of the algorithms used to generate alarms and actions from sensor data.

3. BIASES AND INTERFERENCES

Biases and interferences have not been formally established.

4. SENSITIVITY, RANGE AND PRECISION

Sensitivity range and precision have not been formally established.

5. TEST EQUIPMENT

Equipment specifications are contained in the vapor recovery test procedures cited herein. Additional special equipment specifications may be included at the time of certification if deemed necessary by the Executive Officer due to the nature of a particular ISD-system design.

6. PRELIMINARY SYSTEM EVALUATION AND INSPECTION

6.1 Evaluate Required Documentation of the ISD System

Review the documentation of the ISD system provided by the manufacturer. Evaluate whether or not the documentation conforms to the requirements in CP-201 and is sufficiently clear and complete to facilitate proper and necessary installation, operation, maintenance, calibration, certification testing, and periodic performance testing of the system.

6.2 Verify Standardization of the System Interface

Verify that the ISD system interface is as required by CP-201 by connecting to the system and accessing ISD information with a computer and communications software not provided by the ISD system manufacturer.

6.3 Evaluate Required Uptime Recording and Operational History of the ISD System

Verify that the ISD records the percentage of uptime (i.e. hours and minutes elapsed while the system was fully operational) each day. Examine the record of daily up-time from the operational test period of at least 180 days. Verify that the recorded average daily up-time is 95 percent (95%) or more as required by CP-201.

6.4 Evaluate Required Recorded ISD System Reports

Verify that the ISD system generates and stores reports as required by CP-201. Review available reports and data generated during the operational test period. Note the acceptability or unacceptability of the format of stored

reports and whether or not the incidence of alarms and malfunctions and the UST system pressures seem atypical of plausible GDF vapor recovery system operations. An unusual history of UST pressure behavior, or other abnormalities may signal possible problems with the ISD system. Any abnormalities in reported data noted should be investigated as the Executive Officer may deem appropriate.

6.5 Evaluate Tampering Protection

Review those provisions of the system which prevent tampering with the system, i.e. enclosures around sensors, digital components, electrical connections, appropriate locks or seals, circuit integrity checks and alarm systems as necessary, password protection of program and data files, etc. Consider realistic scenarios and situations, common practice, historical events, cost/benefit factors, the need for access by maintenance and test personnel, etc., as deemed appropriate by the Executive Officer. Assess the adequacy of the system to resist various types of tampering including vandalism.

7. DETERMINATION OF ISD SYSTEM MEASUREMENT ACCURACY AND PRECISION

7.1 General Considerations

The procedures set out below for determination of precision and accuracy make certain assumptions regarding the physical arrangement and nature of the ISD system's sensors which may be incompatible with some future ISD system designs. If the Executive Officer finds that the methods below are inappropriate based on representations of the system manufacturer or examination of a system proposed for certification, the Executive Officer may require the system manufacturer to submit, and may approve and use, alternate procedures appropriate to the specific system design proposed for certification.

7.2 A/L Ratio Measurement (Assist Systems Only)

Perform at least 15 A/L tests using TP-201.5 on each gasoline nozzle.

Calculate, as specified in the "Statistical Calculations" section 8. below, the positive and negative errors which have a five percent (5%) and a one percent (1%) chance of occurrence in any group of measurements upon which the ISD system bases generation of alarms or actions.

7.3 Vapor Flow Performance Measurement (Balance Systems Only)

Install equipment for measurement of vapor return line flow as specified in TP-201.2 (refer to figures 9 and 10 of TP-201.2, Efficiency and Emission Factor for Phase II Systems, for equipment arrangement). If multiple nozzles are served by the same ISD system sensor, install similar equipment to simultaneously measure vapor flow from each nozzle served by the ISD system sensor. Insulate or shade test equipment to prevent unnecessary changes in vapor temperature. Perform all calibrations required by TP-201.2.

Conduct TP-201.4 dynamic back pressure testing at the ISD test site's fueling points at 60 CFH of nitrogen and 80 CFH of nitrogen. The fueling point must pass the TP-201.4 test criteria before testing continues. If the fueling point fails to meet this requirement solely because of flow resistance in the test equipment and the Executive Officer determines that vapor collection performance will not be affected by the measured back pressures then the Executive Officer may waive this requirement.

Record volume flow continuously for at least 24 hours on nozzles served by the ISD system sensor.

Repeat for each ISD system sensor.

Calculate, as specified in the “Statistical Calculations” section 8. below, the positive and negative errors which have a five percent (5%) and a one percent (1%) chance of occurrence in any group of measurements upon which the ISD system bases generation of alarms or actions.

7.4 UST Pressure Measurement (Phase I and II Operations)

Install a reference pressure sensor conforming to the specifications of TP-201.7, Continuous Pressure Monitoring, and compatible with a data acquisition system at the same elevation and location as the ISD system’s sensor to ensure that no bias due to vapor density will affect comparison of measurements by the two sensors. Record pressure indicated by the reference sensor at 1-minute intervals for a period of at least one (1) week or a longer interval determined by the Executive Officer to be appropriate and until at least three (3) Phase I deliveries have occurred. Compare measured pressures to those measured by the ISD system.

Calculate, as specified in the “Statistical Calculations” section 8. below, the positive and negative errors which have a five percent (5%) and a one percent (1%) chance of occurrence in any group of measurements upon which the ISD system bases generation of alarms or actions.

7.5 Leak Rate Measurement

Conduct a series of TP-201.3, Determination of 2-Inch WC Static Pressure Performance of Vapor Recovery Systems of Dispensing Facilities, leak decay tests at the ISD test site, including at least three (3) runs each day on four (4) days, scheduling test days so the ISD system will calculate at least one weekly average leak rate between each pair of successive test days. Compare leak rate predicted from this testing to the weekly average leak rate determined by the system.

Calculate, as specified in the "Statistical Calculations" section 8. below, the positive and negative errors which have a five percent (5%) and a one percent (1%) chance of occurrence in any group of measurements upon which the ISD system bases generation of alarms or actions.

7.6 Central Vacuum System Measurements

Install a reference pressure/vacuum sensor conforming to the specifications of TP-201.7 and compatible with a data acquisition system at the same elevation and location as the ISD system's vacuum sensor to ensure that no bias due to vapor density will affect comparison of measurements by the two sensors. Record pressure indicated by the reference sensor at one-minute intervals for a period of at least one week or a longer interval determined by the Executive Officer to be appropriate. Compare measured vacuum values to those measured by the ISD system.

Calculate, as specified in the "Statistical Calculations" section 8. below, the positive and negative errors which have a five percent (5%) and a one percent (1%) chance of occurrence in any group of measurements upon which the ISD system bases generation of alarms or actions.

7.7 Vapor Processor Measurements

Test procedures for evaluation of precision and accuracy of ISD systems for use with vapor recovery systems incorporating a vapor processor shall be consistent with the arrangement of the ISD system sensors and the requirements imposed on the vapor processor by any applicable executive order and shall compare ISD system measurements to measurements made using procedures, measurement systems and sensors consistent with the specifications of other CARB certification and test procedures for gasoline vapor recovery systems where applicable. Such test procedures may be established in certification testing and made part of any applicable executive order as the Executive Officer determines to be reasonable and necessary. *NOTE: The nature of the tests required will depend on the nature of the interface between the ISD system and the vapor processor. If the interface*

between the vapor processor and the ISD system is entirely digital no testing is required.

8. STATISTICAL CALCULATIONS

8.1 Calculation of Error and Normalized Error

Calculate the error and normalized error relative to the reference system of each measurement by the ISD system as follows:

$$e = V_{ISD} - V_{REF}$$

$$e_{norm} = (V_{ISD} - V_{REF})/V_{REF}$$

where

e	=	error of ISD system measurement relative to reference system measurement for any pair of simultaneous measurements of the same parameter
e_{norm}	=	normalized error of ISD system measurement relative to reference system measurement for any pair of simultaneous measurements of the same parameter
V_{ISD}	=	value of parameter measured by ISD system
V_{REF}	=	value of parameter measured by reference system

Rejection of outlier values is permissible, subject to approval of the Executive Officer, if the values are found to be physically implausible, attributable to known interfering causes, or otherwise non-representative.

8.2 Mathematical Characterization of Error Distributions

Calculate the average values of e and of e_{norm} using the following equation:

$$x_{avg} = \Sigma x_i/n$$

where Σ signifies summation of all individual values in the data set and

x_{avg}	=	the average, i.e. e_{avg} or $e_{norm\ avg}$
x_i	=	corresponding individual values of e or e_{norm}
n	=	number of values in the data set

Calculate the sample standard deviation of e and of e_{norm} using the following equation:

$$s = (\Sigma(x_i - x_{avg})^2 / (n-1))^{1/2}$$

where Σ signifies summation of all individual values in the data set and

s	=	the standard deviation (s_e or $s_{e\text{-}norm}$)

x_i = corresponding individual values of e or e_{norm}
x_{avg} = corresponding average value (e_{avg} or $e_{norm\ avg}$)
n = number of values in the data set

The calculation of averages and standard deviations for data from A/L fuelings and Vapor Collection Performance fuelings may be weighted according to gallons dispensed subject to approval by the Executive Officer.

If $s_{e\text{-}norm}$ is less than s_e/e_{avg} then $s_{e\text{-}norm}$ is a better fit to the data and should be used to calculate the one percent (1%)-probable and five percent (5%)-probable error as described in subsections 8.4 and 8.5 below. Otherwise s_e should be used, again as in subsections 8.4 and 8.5 below.

8.3 Determining the Number of Measurements "n_{ACT}" or "n_{BORD}" Upon which an ISD System Decision Is Based

The number of measurements upon which the ISD bases decisions to generate or not generate an action (i.e., an alarm or a system shut-down) influences the calculation of probable errors below and will depend on the algorithm used by the system, on the prescribed time interval related to the action, and for some actions on typical fueling activity at the facility. Intervals related to various decisions are described in subsections below. Determine the number of measurements n_{ACT} or n_{BORD} upon which each decision will be based considering all pertinent factors including the historical record of activity at the test site. In many cases n_{ACT} and n_{BORD} may be identical, but this will depend on the nature of the decision algorithm. If the Executive Officer finds that activity at the test site is not representative of a typical facility the number of measurements may be based on normal activity at a typical facility.

8.4 Calculation of Five Percent (5%)-Probable Error Magnitude

Calculate the positive (or negative) error of the average of a group of measurements (upon which a required alarm or action is based) which is likely to occur only five percent (5%) of the time (i.e., expected to NOT occur 95% of the time) using the following equation:

$$e_{ACT\text{-}5\%} = 1.645\ n_{ACT}^{-1/2}\ s$$

where
1.645 = constant equal to the z-coordinate for a one-sided 5% outside probability assuming normal distribution
$e_{ACT\text{-}5\%}$ = magnitude of the 5%-probable error of the calculated average of n_{ACT} measurements
n_{ACT} = number of measurements upon which the action is based

s	=	either s_e or ($s_{e\text{-norm}}$ V_{ACT}) , as follows. If $s_{e/}$ e_{avg} < $s_{e\text{-norm}}$ then use s = ($s_{e\text{-norm}}$ V_{ACT}) where V_{ACT} is the criterion value upon which the decision to act is based. Otherwise, use s = s_e instead.

8.5 Calculation of One-Percent (1%)-Probable Error Magnitude

Calculate the positive (or negative) error of the average of a group of measurements (upon which a required alarm or action is based) which is likely to occur only one percent (1%) of the time (i.e. expected to NOT occur 99% of the time) using the following equation:

$$e_{BORD\text{-}1\%} = 2.326\ n_{BORD}^{-1/2}\ s$$

where

2.326	=	constant equal to the z-coordinate for a one-sided 1% outside probability assuming normal distribution
$e_{BORD\text{-}1\%}$	=	magnitude of the 1%-probable error of the calculated average of n_{ACT} measurements
n_{BORD}	=	number of measurements upon which the decision is based
s	=	either s_e or ($s_{e\text{-norm}}$ V_{BORD}) , as follows. If $s_{e/}$ e_{avg} < $s_{e\text{-norm}}$ then use s = ($s_{e\text{-norm}}$ V_{BORD}) where V_{BORD} is the "borderline" criterion value upon which the decision not to act is based. Otherwise, use s = s_e instead.

8.6 Calculation of Action Criterion Values V_{ACT} and Action Test Values V_T

When alarms or interruption of fueling are required at the indicated Action Criterion Values below in the presence of a five percent (5%)-probable measurement error by the ISD system. The indicated Action Test Values should be induced or simulated for the given interval, and twice the given interval where a shutdown action is required after a previous warning alarm.

The Action Criterion Value V_{ACT} is the first value which should provoke an alarm or action. The Action Test Value V_T is the value which the data acquisition system is expected to see and record five percent (5%) of the time when the system is operating such that V_{ACT} prevails. In testing the ISD system for proper generation of actions and alarms by inducing or simulating Action Criterion conditions the ISD system's data acquisition system must see and record values equal to or averaging V_T .

A/L Gross Failure (Interval = 1 day)

a. V_{ACT} = 1.75*(Upper limit of allowable A/L range); $V_T = V_{ACT} - e_{ACT\text{-}5\%}$
b. V_{ACT} = 0.25*(Lower limit of allowable A/L range); $V_T = V_{ACT} + e_{ACT\text{-}5\%}$

A/L Degradation (Interval = 1 week)

a. V_{ACT} = 1.25*(Upper limit of allowable A/L range); $V_T = V_{ACT} – e_{ACT-5\%}$
b. V_{ACT} = 0.75*(Lower limit of allowable A/L range); $V_T = V_{ACT} + e_{ACT-5\%}$

Reduced Vapor Collection Flow Performance (Interval = 2 days)
V_{ACT} = 0.50*(Volume of Fuel Dispensed); $V_T = V_{ACT} + e_{ACT-5\%}$

Central Vacuum System Failure (Interval = 20 minutes)
V_{ACT} = Lowest Vacuum (highest absolute pressure) in Certified Allowable Range; $V_T = V_{ACT} - e_{ACT-5\%}$ where it is understood that the error will result in a lower measured absolute pressure.

UST Ullage Pressure Gross Failure
The test interval for this criterion is 5% of the time in one week, which is 504 minutes (8.4 hours).
V_{ACT} = 1.5 Inches of H_2O; $V_T = V_{ACT} - e_{ACT-5\%}$

UST Ullage Pressure Degradation
The test interval for this criterion is ~~5%~~ 25% of the time in one 30-day month, which is ~~2160 minutes (36 hours)~~ 10,800 minutes (180 hours).
V_{ACT} = 0.5 Inches of H_2O; $V_T = V_{ACT} - e_{ACT-5\%}$

UST Ullage Pressure - Pressure Integrity Failure (Leakage) (Interval = 1 week)
V_{ACT} = pressure consistent with leakage at twice the maximum which would occur if the system passed a TP-201.3 test; $V_T = V_{ACT} - e_{ACT-5\%}$ where $e_{ACT-5\%}$ is calculated based on the average UST ullage pressure during the week.

~~UST Ullage Pressure Phase I Overpressure (Interval = 20 minutes)~~
~~V_{ACT} = 2.5 Inches of H_2O; $V_T = V_{ACT} - e_{ACT-5\%}$~~

Vapor Processor Malfunction (Interval = 1 day)
V_{ACT} = will be as recommended by manufacturer and approved by the Executive Officer; $V_T = V_{ACT} - e_{ACT-5\%}$

8.7 Calculation of Borderline Operation Values V_{BORD} and Action Test Values V_{BT}

No alarms or interruption of fueling are permissible at the indicated Borderline Operation Values below in the presence of a one percent (1%)-probable measurement error by the ISD system. The indicated Borderline Operation Values should be induced or simulated for the given interval, and twice the given interval where a shutdown action is required after a previous warning alarm.

The Borderline Operation Value V_{BORD} is the limit of normal operation. The Borderline Test Value V_{BT} is the value which the data acquisition system is

expected to see and record one percent (1%) of the time when the system was operating at the limit of normal operation. In testing the ISD system for proper immunity to false alarms by inducing or simulating borderline conditions the ISD system's data acquisition system must see and record values equal to or averaging V_{BT}.

A/L Gross Failure (Interval = 1 day)

a. V_{BORD} = 1.00*(Upper limit of allowable A/L range); $V_{BT} = V_{BORD} + e_{BORD\text{-}1\%}$
b. V_{BORD} = 1.00*(Lower limit of allowable A/L range); $V_{BT} = V_{BORD} - e_{BORD\text{-}1\%}$

A/L Degradation (Interval = 1 week)

a. V_{BORD} = 1.00*(Upper limit of allowable A/L range); $V_{BT} = V_{BORD} + e_{BORD\text{-}1\%}$
b. V_{BORD} = 1.00*(Lower limit of allowable A/L range); $V_{BT} = V_{BORD} - e_{BORD\text{-}1\%}$

Reduced Vapor Collection Flow Performance (Interval = 2 days)
V_{BORD} = 1.00*(Volume of Fuel Dispensed); $V_{BT} = V_{BORD} - e_{BORD\text{-}1\%}$

Central Vacuum System Failure (Interval = 20 minutes)
V_{BORD} = Lowest Vacuum (highest absolute pressure) in the Normal Operating Range specified by the manufacturer and approved by the executive officer; $V_{BT} = V_{BORD} - e_{BORD\text{-}1\%}$ where it is understood that the error will result in a higher measured absolute pressure.

UST Ullage Pressure Gross Failure
The test interval for this criterion is 95% of the time in one week, which is up to 9576 minutes (159.6 hours).
V_{BORD} = 95th percentile of historically observed pressures, or alternatively a value between 0.25 and 1.5 inches of H_2O recommended by the manufacturer and approved by the executive officer; $V_{BT} = V_{BORD} + e_{BORD\text{-}1\%}$

UST Ullage Pressure Degradation
The test interval for this criterion is ~~95%~~ 75% of the time in one 30-day month, which is up to ~~41040 minutes (684 hours)~~ 32,400 minutes (540 hours) ~~assuming no deliveries or other events require exclusion of data~~.
V_{BORD} = 95th percentile of historically observed pressures, or alternatively a value between 0.25 and 1.5 inches of H_2O recommended by the manufacturer and approved by the executive officer; $V_{BT} = V_{BORD} + e_{BORD\text{-}1\%}$

UST Ullage Pressure - Pressure Integrity Failure (Leakage) (Interval = 1 week)
V_{BORD} = pressure consistent with leakage at the maximum which would occur if the system passed a TP-201.3 test; $V_{BT} = V_{BORD} + e_{BORD\text{-}1\%}$ where ~~$e_{ACT\text{-}5\%}$~~$e_{BORD\text{-}1\%}$ is calculated based on the average UST ullage pressure during the week.

~~UST Ullage Pressure Phase I Overpressure (Interval = 20 minutes)~~
~~V_{BORD} = 75th percentile pressure observed in Phase 1 deliveries; $V_{BT} = V_{BORD} + e_{BORD-1\%}$~~

Vapor Processor Malfunction (Interval = 1 day)
V_{BORD} = will be as recommended by manufacturer and approved by the Executive Officer; $V_{BT} = V_{BORD} - e_{BORD-1\%}$

9. TESTING PROPER ISD SYSTEM OPERATION INCLUDING GENERATION OF AUTOMATIC ALARMS AND ACTIONS

9.1 General Considerations

As required in CP-201, the ISD system manufacturer shall provide a means for verifying proper operation of the ISD system.

Appropriate methods for such testing may include, depending on the nature of the ISD system and subject to approval of the Executive Officer: (1) temporary substitution of test data files reflecting failure conditions for actual data acquired and recorded by the ISD system; (2) temporary connection of special electrical equipment or components in the system's sensor circuitry to emulate failure conditions; (3) temporary modification or adjustment of the vapor recovery system which causes it to fail in a safe and controlled manner.

Testing by any of these means may require that tampering protections be bypassed, acquired data be flagged as affected by testing activity, or both.

9.2 Appropriateness of Generated Alarms

During certification testing the nature of the alarms generated by the system shall be considered and approved. Alarms which disrupt operations by virtue of being too loud or intrusive may risk being disabled by tampering. Alarms which are not sufficiently loud or intrusive may not be recognized or acted on by operating personnel. Common practice often calls for both audible and visible alarm indications, and for the ability to silence audible alarms once they have been heard.

9.3 System Startup and Restart

Verify that information indicating a restart is stored by the system as required by CP-201 by inducing or simulating a loss of power to the system.

9.4 Sensor Failure Detection

Verify that the system has the ability to test the integrity of its sensors and that an induced or simulated sensor failure causes an appropriate system

response. At a minimum the ISD system should be capable of detecting removal or disconnection of any sensor.

9.5 A/L Gross Failure Response (Assist Systems Only)

This test spans an actual or simulated period of two (2) days for failures below the acceptable A/L range, two (2) days for failures above the acceptable A/L range, and two (2) days for borderline acceptable operation.

Induce or simulate A/L failure conditions and borderline acceptability conditions as follows and verify appropriate system response; Arrange induced or simulated conditions considering the ISD system's timing of daily assessments of A/L ratio acceptability. An alarm is scheduled immediately when any daily assessment shows failure, and interruption of fueling is scheduled immediately when a second consecutive daily assessment shows failure.

At a level 75 percent (75%) above the upper A/L range limit in the presence of a five-percent (5%)-probable negative error in measurement of A/L by the ISD system, and at a level 75 percent (75%) below the lower A/L range limit in the presence of a five-percent (5%)-probable positive error in measurement of A/L by the ISD system, the system should alarm and disable fueling as scheduled. Manual re-enabling of fueling should be successful and events should be properly recorded by the system.

At the lower A/L range limit in the presence of a one-percent (1%)-probable negative error in A/L measurement by the ISD system, and at the upper range limit in the presence of a one-percent (1%)-probable positive error, the system should neither alarm or disable fueling.

9.6 A/L Degradation Response (Assist Systems Only)

This test spans an actual or simulated period of two (2) weeks for failures below the acceptable A/L range, two (2) weeks for failures above the acceptable A/L range, and two (2) weeks for borderline acceptable operation.

Proceed as for the Gross Failure checks above but with A/L 25 percent (25%) outside certified range rather than 75 percent (75%) outside certified range and considering that the assessment interval is one (1) week rather than one (1) day.

9.7 Reduced Vapor Collection Flow Performance (Balance Systems Only)

This test spans an actual or simulated period of two (2) days for failures below the acceptable vapor collection flow performance level and two (2) days for borderline acceptable operation.

Induce or simulate reduced vapor collection flow and borderline acceptability conditions as follows and verify appropriate system response. Arrange induced or simulated conditions considering the ISD system's timing of daily assessments of vapor collection flow performance acceptability. An alarm is scheduled immediately when any daily assessment shows failure, and interruption of fueling is scheduled immediately when a second consecutive daily assessment shows failure.

With vapor collection flow performance 50 percent (50%) below the minimum certified level and a five-percent (5%)-probable positive error in ISD system measurement of vapor collection flow the system should alarm and disable fueling as scheduled. Manual re-enabling of fueling should be successful and events should be properly recorded by the system.

With vapor collection flow performance at the minimum certified level for the vapor recovery system and a one-percent (1%)-probable negative error in measurement of vapor collection flow by the ISD system the system should neither alarm nor disable fueling.

9.8 Central Vacuum System Failure (Systems so equipped only)

This test spans an actual or simulated period of 20 minutes for failures and 20 minutes for borderline acceptable conditions.

Induce or simulate a Central Vacuum Unit failure. The ISD system should alarm and disable fueling after 20 minutes. Manual re-enabling of fueling should be successful and events should be properly recorded by the system.

If detection of failure depends on quantitative measurements made by the ISD system, the Executive Officer shall specify an appropriate definition of borderline operating conditions. When such conditions are induced or simulated and a one-percent (1%) probable worst-case (positive or negative as applicable) error exists in quantitative measurements made by the ISD system the system should not alarm or interrupt fueling.

9.9 UST Ullage Pressure - Gross Failure Response

This test spans an actual or simulated period of two (2) weeks for failures where UST ullage pressure exceeds the specified criteria and two (2) weeks for borderline acceptable operation.

Induce or simulate UST ullage pressure excessive values and borderline acceptability conditions as follows and verify appropriate system response. Arrange induced or simulated conditions considering the ISD system's timing of weekly assessments of UST ullage pressure acceptability. An alarm is

scheduled immediately when any weekly assessment shows failure, and interruption of fueling is scheduled immediately when a second consecutive weekly assessment shows failure.

If UST ullage pressure during a week exceeds 1.5 Inches of H_2O during five percent (5%) of the time and a five-percent (5%)-probable negative measurement error is present whenever pressure exceeds1.5 inches H_2O, the system should alarm and disable fueling as scheduled. Manual re-enabling of fueling should be successful and events should be properly recorded by the system.

If UST ullage pressure during a week is at the maximum allowable level permitted by an executive order applicable to the vapor recovery system (or the 95th percentile level of pressures actually observed in the system if no maximum limit is specified by an applicable executive order) during the time and a one-percent (1%)-probable positive measurement error is present whenever pressure exceeds1.5 inches H_2O the system should neither alarm or disable fueling.

9.10 UST Ullage Pressure - Degradation Response

This test spans an actual or simulated period of two (2) months for failures where UST ullage pressure exceeds the criteria as specified and two (2) months for borderline acceptable operation.

Proceed as for the UST ullage pressure Gross Failure checks above but with UST ullage pressure above 0.5 inches of H_2O during 25 percent (25%) of the time rather than above 1.5 inches of H_2O during five percent (5%) of the time. Arrange induced or simulated conditions considering the ISD system's timing of monthly assessments of UST ullage pressure acceptability. An alarm is scheduled immediately when any monthly assessment shows failure, and interruption of fueling is scheduled immediately when a second consecutive monthly assessment shows failure.

9.11 UST Ullage Pressure - Pressure Integrity Failure (Leakage) Response

This test spans an actual or simulated period of two (2) weeks for failures where leakage exceeds the criteria as specified and two (2) weeks for borderline acceptable operation.

Induce or simulate unacceptable and borderline acceptable leakage of the vapor recovery system as described below, or UST ullage pressure behavior indicative of such leakage as the Executive Officer may find appropriate. Arrange induced or simulated conditions considering the ISD system's timing of weekly assessments of leakage based on UST ullage pressure. An alarm is scheduled immediately when any weekly assessment shows failure, and

interruption of fueling is scheduled immediately when a second consecutive weekly assessment shows failure.

If leakage occurs at a rate twice the maximum that would occur if the system passed a TP-201.3 test and a five-percent (5%)-probable negative error in measurement of the leak rate is present, the system should alarm and interrupt fueling as scheduled. Manual re-enabling of fueling should be successful and events should be properly recorded by the system.

If leakage occurs at a rate equal to the maximum that would occur if the system passed a TP-201.3 test and a one-percent (1%)-probable positive error in measurement of the leak rate is present, the system should neither alarm nor interrupt fueling.

9.12 Vapor Processor Malfunction Response (Systems So Equipped Only)

This test spans an actual or simulated period of two (2) days for failures where vapor processor malfunction is indicated and two (2) days for borderline acceptable operation (if applicable).

Induce or simulate a vapor processor malfunction. Arrange induced or simulated conditions considering the ISD system's timing of daily assessments of vapor processor function. An alarm is scheduled immediately when any daily assessment shows malfunction, and interruption of fueling is scheduled immediately when a second consecutive daily assessment shows malfunction.

The system should alarm and disable fueling as scheduled when a malfunction is induced or simulated.

If detection of malfunction depends on quantitative measurements made by the ISD system, the Executive Officer shall specify an appropriate definition of borderline failure conditions. When such conditions are induced or simulated and a 5-percent (5%)-probable worst-case (positive or negative as applicable) error exists in quantitative measurements made by the ISD system the system should alarm and interrupt fueling as scheduled.

If detection of malfunction depends on quantitative measurements made by the ISD system, the Executive Officer shall specify an appropriate definition of borderline acceptable operating conditions. When such conditions are induced or simulated and a one-percent (1%)-probable worst-case (positive or negative as applicable) error exists in quantitative measurements made by the ISD system the system should not alarm or interrupt fueling.

10. ALTERNATIVE TEST PROCEDURES

This procedure shall be conducted as specified. Modifications to this test procedure shall not be used to determine compliance unless prior written approval has obtained from the ARB Executive Officer pursuant to CP-201 or CP-206.

California Environmental Protection Agency

Air Resources Board

PROPOSED

Vapor Recovery Test Procedure

TP - 201.2J

PRESSURE DROP BENCH TESTING OF VAPOR RECOVERY COMPONENTS

Adopted: October 8, 2003
Amended: [Insert amendment date]

Note: The text is shown in ~~strikeout~~ to indicate that it is proposed for deletion and underline to indicate that it is proposed for addition. [Bracketed text] is not part of the proposed amendment.

California Environmental Protection Agency
Air Resources Board

TP-201.2J

Pressure Drop Bench Testing of Vapor Recovery Components

Definitions common to all certification and test procedures is in:

D-200 Definitions for Vapor Recovery Procedures

For the purpose of this procedure, the term "ARB" or “CARB” refers to the California Air Resources Board, and the term "Executive Officer" refers to the ARB Executive Officer ~~of the ARB~~ or his or her authorized representative or designate.

1. APPLICABILITY AND PURPOSE

This procedure applies to Phase II vapor recovery components installed at dispensing facilities. The purpose of this test procedure is to determine the pressure drop of components in vapor recovery systems at a fixed flow rate for compliance with pressure drop performance standards specified in Certification Procedure 201 (CP-201) and applicable Executive Order for specific components. This procedure is used during certification.

2. PRINCIPLE AND SUMMARY OF TEST PROCEDURE

The pressure drop across a vapor recovery component is determined by measuring the differential pressure. Test points are located immediately upstream and downstream from the component. The test is conducted while passing a known flow of nitrogen gas through the component.

Figures 1 illustrates typical components that undergo testing. Figure 2 illustrates an example of a pressure drop test bench.

3. BIASES AND INTERFERENCES

Equipment tested for certification must be representative of the equipment used in actual installations of vapor recovery systems.

4. SENSITIVITY, RANGE, AND PRECISION

This procedure can measure pressure drops in the range of 0.001 to ~~2~~ 0.250 inches H_2O at a flow of 60 cubic feet per hour (CFH) or 28.3 liters per minute (LPM) with a precision estimated at $\pm$ 0.002 inch H_2O.

5. EQUIPMENT

5.1 Differential Low Pressure Transmitter and Meter. This test procedure utilizes two electronic differential low-pressure transmitters to measure pressure drops for components and systems. The instrument used for measuring individual components has a range of 0.000 to ~~0.100~~ 0.250 inches H_2O and an accuracy of zero point two five percent (0.25%) of full scale with a resolution of 0.001. ~~The instrument used for measuring components connected in series has a range of 0.000 to 2 inches H_2O and an accuracy of zero point zero six percent (0.06%) of full scale with a resolution of 0.001 inch H_2O. Repeatability is point zero five percent (0.05%) of full-scale.~~

5.2 Mass Flow Meter. This test procedure utilizes a mass flow meter (MFM) to measure the flow rate. Since the volume flow specification in CP-201 for determining pressure drop that references this test procedure is 60 CFH or 28.3~~ liters per minute (~~LPM~~)~~, the range of the mass flow meter used to measure flow is 0.0 to 30.0 LPM. The accuracy of the MFM is plus or minus 0.3 LPM of full scale with a resolution of 0.1 LPM. Repeatability is point two percent (0.2%) of full-scale.

5.3 Nitrogen (N_2). This procedure uses commercial grade nitrogen in a high-pressure cylinder, equipped with a two-stage pressure regulator.

5.4 Orifice Plate. A flat metal plate with a sharp edged hole accurately machined to 0.5 inch in diameter.

5.5 Pipe. Two 24-inch sections of 1 ½-inch diameter rigid piping with smooth bore. ~~schedule 40 PVC pipe.~~

5.6 Digital Manometer. A digital manometer with a range of 0 to 19.99 inches H_2O is used to check the pressure integrity of the system while performing a leak test.

6. CALIBRATION PROCEDURE

The MFM used in this test procedure is certified to a primary standard on an annual basis. To get an initial certification, the correlation coefficient from seven multi-point calibrations must be at least 0.9999. After the initial calibration, the annual MFM certification must be within one percent (1.0%) of the previously certified slope and intercept.

Pressure measurement devices are calibrated in accordance with manufacturer's specifications at an outside laboratory. To be considered, the outside laboratory must use NIST traceable standards to perform calibrations. The certification results in a slope and intercept from a five-point calibration to a known standard.

Temperature Measurement Devices: Temperature measurement devices shall be checked semi-annually using an ice bath, ambient air, and boiling water. This accuracy check shall be conducted by comparison to a NIST traceable measurement device.

7. PRE-TEST PROTOCOL

Ensure that the test equipment has been calibrated within the last year.

Turn on test equipment and allow it to stabilize for 30 minutes.

Perform a single-point-response check of the test equipment using an orifice plate. The observed response of differential low-pressure meter must be within three percent (3%) of the expected response as calculated under Section 9 below.

8. TEST PROCEDURE

Figure 1 shows examples of equipment to be tested, depending upon the application of the certification procedure.

Figure 2 shows an example of a test bench.

8.1 Measuring Barometric Pressure and Flow Temperature

8.1.1 Insure that the electronic test equipment has operated for 30 minutes.

8.1.2 Uncap the end of the ~~schedule-40 PVC~~ pipe.

8.1.3 Slowly establish a stable flow rate by slowly adjusting the needle valves shown in Figure 2 until the display of MFM reads 28.3 LPM.

8.1.4 Allow a few seconds for the system to reach equilibrium.

8.1.5 Record the downstream flow temperature and ambient barometric pressure readings on the Vapor Recovery Component Pressure Drop Bench Test Data Form.

8.2 Calculate the Correct MFM Display to Obtain a Flow of 28.3 LPM

Calculate the MFM display that corresponds to a flow rate of 28.3 LPM using the MFM calibration slope and intercept along with the barometric pressure and flow temperature as described in Attachment 1.

8.3 Establishing a Stable Test Flow

Slowly establish a stable flow rate of 28.3 LPM by slowly adjusting the needle valves shown in Figure 2 until the display of MFM reads the value calculated in Section 8.3.1.

8.4 Measuring the Test Bench Pressure Drop

8.4.1 Perform this measurement once prior to testing vapor recovery components.

8.4.2 Couple the upstream and downstream test bench flanges together.

8.4.3 Uncap the end of the ~~schedule 40~~ pipe.

8.4.4 Slowly establish a stable test flow rate of 28.3 LPM by slowly adjusting the needle valves until the display of MFM reads the value as calculated in Section 8.3.1.

8.4.5 After a stable test flow is obtained, record the pressure drop reading from the differential low-pressure meter. Record the reading on the Vapor Recovery Component Pressure Drop Bench Test Data Form.

8.5 Leak Test.

8.5.1 Insure that the liquid paths of the component to be tested are blocked to prevent N_2 from flowing through them.

8.5.2 Connect the test item with a leak-tight connector to the test bench flanges as shown in Figure 2.

8.5.3 Cap the end of the ~~schedule-40 PVC~~ pipe to obtain a leak-tight seal.

8.5.4 Visually and manually check all fittings for proper assembly.

8.5.5 Slowly establish a stable gauge pressure of approximately 2 inches H_2O.

8.5.6 Monitor the system for five minutes. If the pressure does not fall by more than 0.1 inch H_2O, the system is leak tight. If the pressure drops by more than 0.1 inch H_2O over the monitoring period the system may be leaking.

8.5.7 If the pressure check is unable to verify a seal, check for leaks by applying soap solution around all fittings and/or by observing the pressure meter.

8.5.8 If soap bubbles grow around fittings or if the pressure continues to drop, repeat subsections 8.1.1 through 8.1.5. It may be necessary to provide an isothermal environment for the pressurized ballast tank to minimize pressure changes caused by temperature fluctuations.

8.6 Recording Component Pressure Drops

8.6.1 After performing a leak check, uncap the end of the test pipe.

8.6.2 Obtain a stable test flow as specified in subsection 8.4.5.

8.6.3 Record the differential pressure drop and stop the flow momentarily. Re-establish a stable flow, take a second reading, and stop the flow momentarily. Re-establish a stable flow and take a third reading. Record the readings on the Vapor Recovery Component Pressure Drop Bench Test Data Form (Form 1).

9. QUALITY ASSURANCE / QUALITY CONTROL (QA/QC)

9.1 Equipment Certification. All test equipment (mass flow meter, differential low-pressure transmitter, temperature transducer, and barometric pressure transducer) is certified against a primary standard traceable to the NIST annually.

9.2 Single Point Response Check. The test equipment used to measure pressure drop is challenged with an orifice plate prior to testing vapor recovery components. The orifice plate will generate a known pressure drop for a given flow based on its dimensions and the dimensions of the test pipe. The measured pressure drop across the orifice plate must be within three percent (3%) of the predicted pressure drop for a flow rate of 28.3 LPM using the following equation:

Orifice Plate Pressure Drop: $$p = \frac{}{2}(1 - \frac{A_2^2}{A_1^2})(\frac{Q}{C_d A_2})^2$$

Where:

$p_1 =$ Pressure one laminar pipe diameter before orifice
$p_2 =$ Pressure one half laminar pipe diameter after orifice
$v_1 =$ Velocity of fluid in laminar pipe leading to orifice
$v_2 =$ Velocity of fluid in orifice
$\rho =$ Density of test fluid (Nitrogen = 1.16 kg/m^3 @ 20ºC)
$A_1 =$ Cross sectional area of laminar pipe leading to orifice

A_2 = Cross sectional area of square edged orifice
Q = Flow in laminar pipe leading to orifice
C_d = Orifice discharge coefficient

10. RECORDING DATA

Data are recorded on the Vapor Recovery Component Pressure Drop Bench Test Data Form (Form 1).

11. CALCULATING RESULTS

Differential pressure drop readings from three runs are averaged. This average is then compared with the applicable component requirement to determine compliance.

12. ALTERNATIVE TEST PROCEDURES

This procedure shall be conducted as specified. Any modifications to this test procedure shall not be used unless prior written approval has been obtained from the ARB Executive Officer pursuant to section 14 of Certification Procedure CP-201 or section 15 of Certification Procedure CP-206.

13. EXAMPLE FIGURES AND FORMS

13.1 Form 1 - Vapor Recovery Component Pressure Drop Bench Test Data Form

13.2 Figures

Each figure provides an illustration of an implementation that conforms to the requirements of this test procedure; other implementations that so conform are acceptable too.

13.2.1 Figure 1: Examples of Equipment to Be Tested

13.2.2 Figure 2: Example of a Bench Test

Form 1

California Environmental Protection Agency

Air Resources Board

Vapor Recovery Component Pressure Drop Bench Test Data Form

Manufacturer: _____ **Model #** _____

Performance Type: Nozzle ! **Hose** ! **Breakaway** ! **Dispenser** ! **Swivel** !

Barometric Pressure:_____mmHg Flow Temp:_____ºCelsius

Mass Flow Meter (MFM) Reading: _____ MFM Slope: _____ MFM Intercept: ____

Q_{STD} = MFM Display*MFM Slope + MFM Intercept = _____L/Min

$$Q_{Actual} = Q_{STD} * (\frac{FlowTemp + 273.15}{298.15}) * (\frac{760}{Barometric\ Pressure})$$

Q_{Actual} = _____L/Min

$$MFMDisplay = \frac{((\frac{28.3}{(\frac{FlowTemp + 273.15}{298.15}) * (\frac{760}{Baro\ Pressure})}) - MFMInt)}{MFMSlope}$$

		inches H_2O,	Temp,	MFM Display
Serial # _____	Run #1 Pressure Drop:	_____		
	Run #2 Pressure Drop:			
	Run #3 Pressure Drop:	_____	_____	_____
	Average:	_____		
	Test Bench Drop:	_____		
	Average – Bench Drop:	_____		
	Requirement:	_____		

Average Pressure Drop – Test Bench Drop≤ Requirement? **Pass** ! **Fail** !

Performance Type	***Requirement***
Nozzle Pressure Drop	ΔP at 28.3 LPM of N_2 ≤ 0.08 inches H_2O
Hose Pressure Drop	ΔP at 28.3 LPM of N_2 ≤ 0.09 inches H_2O
Breakaway Pressure Drop	ΔP at 28.3 LPM of N_2 ≤ 0.04 inches H_2O
Dispenser Pressure Drop	ΔP at 28.3 LPM of N_2 ≤ 0.08 inches H_2O
Swivel Pressure Drop	ΔP at 28.3 LPM of N_2 ≤ 0.01 inches H_2O

Test Performed By: _____ Date:_____

Figure 1
Examples of Equipment to Be Tested

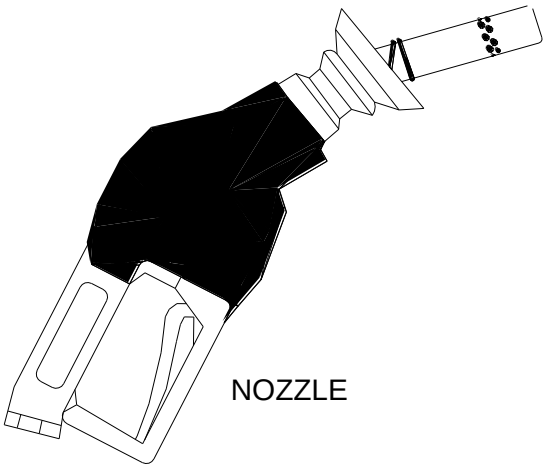

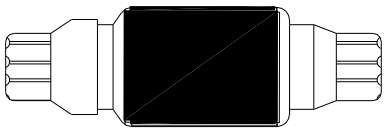

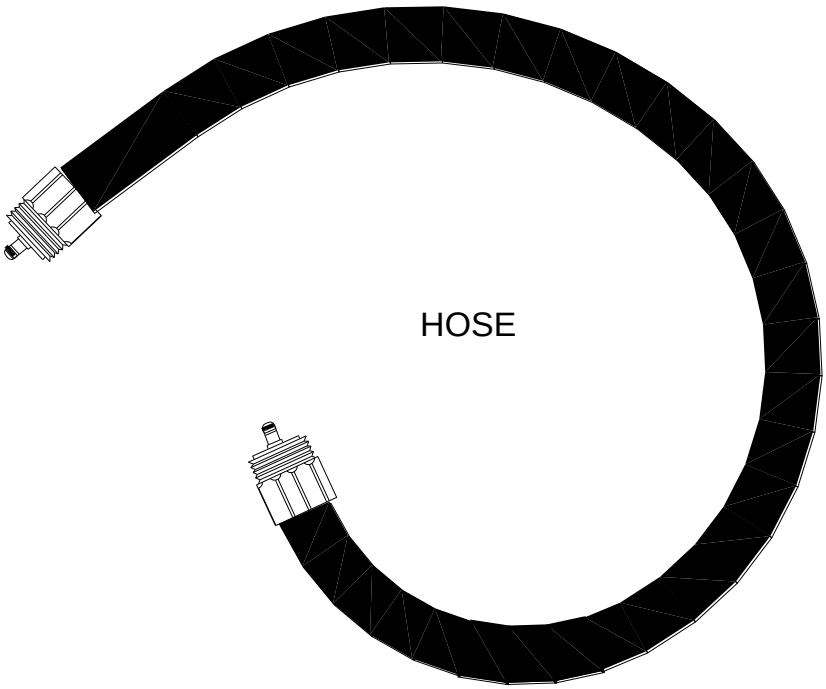

Figure 2
Example of a Bench Test

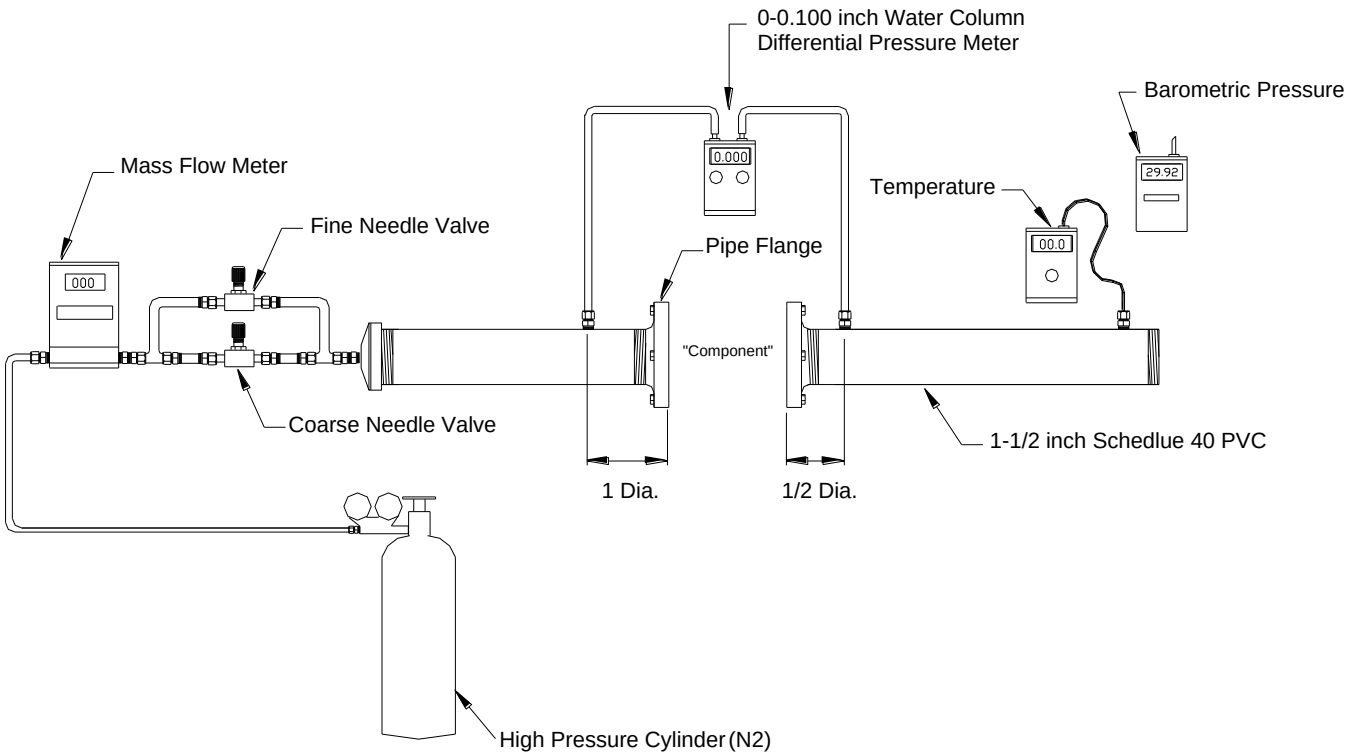

Notes: Three tube configurations are required to measure different components. Each configuration requires a uniquely designed orifice plate, flange, couplings, and male & female interfacing adapters.

California Environmental Protection Agency

Air Resources Board

PROPOSED

Vapor Recovery Test Procedure

TP-201.3

Determination of 2 Inch WC Static Pressure Performance of Vapor Recovery Systems of Dispensing Facilities

Adopted: April 12, 1996
Amended: March 17, 1999
Amended: (insert amended date)

Note: The text is shown in ~~strikeout~~ to indicate that it is proposed for deletion and underline to indicate that it is proposed for addition. [Bracketed text] is not part of the proposed amendment.

California Environmental Protection Agency
Air Resources Board
Vapor Recovery Test Procedure

TP-201.3

Determination of 2 Inch WC Static Pressure Performance of Vapor Recovery Systems of Dispensing Facilities

1 APPLICABILITY

Definitions common to all certification and test procedures are in:

D-200 Definitions for ~~Certification Procedures and Test Procedures for~~ Vapor Recovery Procedures ~~Systems~~

For the purpose of this procedure, the term "ARB or CARB" refers to the ~~State of~~ California Air Resources Board, and the term "~~ARB~~ Executive Officer" refers to the ARB Executive Officer ~~of the ARB~~ or his or her authorized representative or designate.

1.1 This test procedure is used to quantify the vapor tightness of vapor recovery systems installed at gasoline dispensing facilities (GDF) equipped with pressure/vacuum (P/V) valves, provided that the designed pressure setting of the P/V valves is a minimum of 2.5 inches of water column (inches H_2O).

1.2 Systems equipped with a P/V valve(s) allowed to have a designed cracking pressure less than 2.5 inches H_2O shall be bagged to eliminate any flow contribution through the valve assembly from the test results. The valve/vent pipe connection, however, shall remain unobstructed during this test.

1.3 At facilities not required to be equipped with a P/V valve(s), the vent pipe(s) shall be capped. For those installations, the test may be conducted at the vent pipe(s).

2 PRINCIPLE AND SUMMARY OF TEST PROCEDURE

2.1 The entire vapor recovery system is pressurized with nitrogen to two (2.0) inches H_2O. The system pressure is then allowed to decay and the pressure after five (5) minutes is compared with an allowable value. The minimum allowable five-minute final pressure is based on the system ullage and pressure decay equations. For the purpose of compliance determination, this test shall be conducted after all back-filling, paving, and installation of all Phase I and Phase

II components, including P/V valves, has been completed.

2.2 For GDF equipped with a coaxial Phase I system, this test shall be conducted at a Phase II vapor riser. For GDF which utilize a two-point Phase I system, this test may be conducted at either a Phase II riser or a Phase I vapor coupler provided that the criteria set forth in Section 6.7 have been met. If the integrity criteria for two-point systems specified in Section 6.7 are met, it is recommended that this test be conducted at the Phase I vapor coupler.

3 RANGE

3.1 If mechanical pressure gauges are employed, the full-scale range of pressure gauges shall be 0-2.0, 0-1.0, and 0-0.50 inches H_2O column. Maximum incremental graduations of the pressure gauge shall be 0.05 inches H_2O and the minimum accuracy of the gauge shall be three percent of full scale. The minimum diameter of the pressure gauge face shall be 4 inches.

3.2 If an electronic pressure measuring device is used, the full-scale range of the device shall not exceed 0-10 inches H_2O with a minimum accuracy of 0.5 percent of full-scale. A 0-20 inches H_2O device may be used, provided the equivalent accuracy is not less than 0.25 percent of full-scale.

3.3 The minimum total ullage, for each individual tank, shall be 1,000 gallons or 25% of the tank capacity, whichever is less. The maximum total ullage, for all manifolded tanks, shall not exceed 25,000 gallons. These values are exclusive of all vapor piping volumes.

3.4 The minimum and maximum nitrogen feed-rates, into the system, shall be one (1) and five (5) CFM, respectively.

4 INTERFERENCES

4.1 Introduction of nitrogen into the system at flowrates exceeding five (5) CFM may bias the results of the test toward non-compliance. Only gaseous nitrogen shall be used to conduct this test. Air, liquefied nitrogen, helium, or any gas other than nitrogen shall not be used for this test procedure.

4.2 For vacuum-assist Phase II systems which utilize an incinerator, power to the collection unit and the processor shall be turned off during testing.

4.3 For vacuum-assist systems, with positive displacement vacuum pumps, which locate the vacuum producing device in-line between the Phase II vapor riser and the storage tank, the following requirements shall apply:

4.3.1 A valve shall be installed at the vacuum producing device. When closed, this

valve shall isolate the vapor passage downstream of the vacuum producing device.

4.3.2 The storage tank side of the vacuum producing device shall be tested in accordance with the procedures outlined in Section 7 of this method. Compliance shall be determined by comparing the final five-minute pressure with the allowable minimum five-minute final pressure from the first column (1-6 affected nozzles) in Table IB or use the corresponding equation in Section 9.2.

4.3.3 The upstream vapor passage (nozzle to vacuum producing device) shall also be tested. Methodology for this test shall be submitted to the California Air Resources Board (CARB) for approval prior to submission of test results or shall be conducted in accordance with the procedures set forth in the applicable CARB Executive Order.

4.4 The results of this static pressure integrity test shall not be used to verify compliance if an Air to Liquid Volumetric Ratio Test (TP-201.5 or equivalent) was conducted within 24 hours prior to this test.

4.5 Thermal Bias for Electronic Manometers

Electronic manometers shall have a warm-up period of at least 15 minutes followed by a five minute drift check. If the drift exceeds 0.01 inches water column, the instrument should not be used.

5 APPARATUS

5.1 Nitrogen

Use commercial grade nitrogen in a high pressure cylinder, equipped with a two-stage pressure regulator and a one psig pressure relief valve.

5.2 Pressure Measuring Device

Use 0-2.0, 0-1.0, and 0-0.50 inches H_2O pressure gauges connected in parallel, a 0-2 inches H_2O manometer, or an electronic pressure measuring device to monitor the pressure decay in the vapor recovery system. The pressure measuring device shall, at a minimum, be readable to the nearest 0.05 inches H_2O.

5.3 “T” Connector Assembly

See Figure 1 for example.

5.4 Vapor Coupler Integrity Assembly

Assemble OPW 633-A, 633-B, and 634-A adapters, or equivalent, as shown in Figure 2. If the test is to be conducted at the storage tank Phase I vapor coupler, this assembly shall be used prior to conducting the static leak test in order to verify the pressure integrity of the vapor poppet. The internal volume of this assembly shall not exceed 0.1 cubic feet.

5.5 Vapor Coupler Test Assembly

Use a compatible OPW 634-B cap, or equivalent, equipped with a center probe to open the poppet, a pressure measuring device to monitor the pressure decay, and a connection for the introduction of nitrogen into the system. See Figure 3 for an example.

5.6 Stopwatch

Use a stopwatch accurate to within 0.2 seconds.

5.7 Flow Meter

Use a Dwyer flowmeter, Model RMC-104, or equivalent, to determine the required pressure setting of the delivery pressure gauge on the nitrogen supply pressure regulator. This pressure shall be set such that the nitrogen flowrate is between 1.0 and 5.0 CFM.

5.8 Combustible Gas Detector

A Bacharach Instrument Company, Model 0023-7356, or equivalent, may be used to verify the pressure integrity of system components during this test.

5.9 Leak Detection Solution

Any liquid solution designed to detect vapor leaks may be used to verify the pressure integrity of system components during this test.

6 PRE-TEST PROCEDURES

6.1 The following safety precautions shall be followed:

6.1.1 Only nitrogen shall be used to pressurize the system.

6.1.2 A one psig relief valve shall be installed to prevent the possible over-pressurizing of the storage tank.

6.1.3 A ground strap should be employed during the introduction of nitrogen into

the system.

6.2 Failure to adhere to any or all of the following time and activity restrictions shall invalidate the test results:

6.2.1 There shall be no Phase I bulk product deliveries into or out of the storage tank(s) within the three (3) hours prior to the test or during performance of this test procedure.

6.2.2 There shall be no product dispensing within thirty (30) minutes prior to the test or during performance of this test procedure.

6.2.3 Upon commencement of the thirty minute “no dispensing” portion of this procedure, the headspace pressure in the tank shall be measured. If the pressure exceeds 0.50 inches H_2O, the pressure shall be carefully relieved in accordance with all applicable safety requirements. After the thirty minute “no dispensing” portion of this procedure, and prior to introduction of nitrogen, the headspace pressure shall again be lowered, if necessary, to less than 0.50 inches H_2O.

6.2.4 There shall be no Air to Liquid Volumetric Ratio Test (TP-201.5 or equivalent) conducted within the twenty-four (24) hour period immediately prior to this test.

6.2.5 The test shall be conducted with the station in normal operating mode. This includes all nozzles properly hung up in the dispenser boots and all dispenser cabinet covers in place. The exception to normal operating mode is that dispensing is disallowed as specified.

6.3 Measure the gallons of gasoline present in each underground storage tank and determine the actual capacity of each storage tank from facility records. Calculate the ullage space for each tank by subtracting the gasoline gallonage present from the actual tank capacity. The minimum ullage during the test, for all manifolded tanks, shall be 1,000 gallons or 25 percent of the tank capacity, whichever is less. The total ullage, for all manifolded tanks, shall not exceed 25,000 gallons.

6.4 For two-point Phase I systems, this test shall be conducted with the dust cap removed from both the product and the vapor coupler. This is necessary to determine the vapor tightness of the Phase I vapor poppet. See Section 6.7 if this test is to be conducted at the Phase I vapor coupler.

6.4.1 For coaxial Phase I systems, this test shall be conducted with the dust cap removed from the Phase I coupler. This is necessary to insure the vapor tightness of the Phase I vapor poppet.

6.4.2 Verify that the liquid level in the storage tank is at least four (4) inches above the highest opening at the bottom of the submerged drop tube.

6.5 If the Phase I containment box is equipped with a drain valve, this test shall be conducted with the drain valve installed and the manhole cover removed. If the drain valve is cover-actuated, the test shall be done once with the cover removed and repeated with the cover installed.

6.6 If the test is to conducted at a Phase II vapor riser, disconnect the dispenser end of one vapor recovery hose and install the “T” connector assembly (see Figure 1). Connect the nitrogen gas supply (do not use air) and the pressure measuring device to the “T” connector.

6.6.1 For those Phase II vapor systems utilizing a dispenser mounted remote vapor check valve, the “T” connector assembly shall be installed on the vapor riser side of the check valve.

6.7 If this test is to be conducted at the Phase I vapor coupler on a two-point Phase I system, the procedures set forth in subsections 6.7.1 and 6.7.2 shall be successfully completed prior to testing. The static pressure integrity test shall not be conducted at the Phase I coupler at facilities equipped with coaxial Phase I systems.

6.7.1 Connect the Vapor Coupler Integrity Assembly to the Phase I vapor coupler. Connect the Vapor Coupler Test Assembly. Connect the nitrogen supply to the assembly and carefully pressurize the internal volume of the assembly to two (2.0) inches H_2O. Start the stopwatch. Record the final pressure after one minute.

6.7.2 If the pressure after one minute is less than 0.25 inches H_2O, the leak rate through the Phase I vapor poppet precludes conducting the static leak test at this location. If the pressure after one minute is greater than or equal to 0.25 inches H_2O, the static leak test may be conducted at this location. This criteria assures a maximum leak rate through the Phase I vapor poppet of less than 0.0004 cubic feet per minute.

6.7.3 Disconnect the Vapor Coupler Integrity Assembly to the Phase I vapor coupler. If the requirements of subsection 6.7.2 were met, connect the Vapor Coupler Test Assembly to the Phase I vapor coupler.

6.7.4 Product may be poured onto the Phase I vapor coupler to check for leaks. This diagnostic procedure shall not be substituted for the procedures set forth in subsections 6.7.1 and 6.7.2.

6.8 All pressure measuring device(s) shall be bench calibrated using either a reference gauge or incline manometer. Calibration shall be performed at 20, 50, and 80 percent of full scale. Accuracy shall be within two percent at each of these calibration points. Calibrations shall be conducted on a frequency not to exceed 90 days.

6.9 Use the flowmeter to determine the nitrogen regulator delivery pressures which correspond to nitrogen flowrates of 1.0 and 5.0 CFM. These pressures define the allowable range of delivery pressures acceptable for this test procedure. Also record the regulator delivery pressure setting, and the corresponding nitrogen flowrate that will be used during the test. As an alternative, the flowmeter may be connected, in-line between the nitrogen supply regulator and Vapor Coupler Test Assembly, during the test.

6.10 Use Equation 9.3 to calculate the approximate time required to pressurize the system ullage to the initial starting pressure of two (2.0) inches H_2O. This will allow the tester to minimize the quantity of nitrogen introduced into those systems which cannot comply with the static leak standards.

6.11 Attach the Vapor Coupler Test assembly to the Phase I poppet or the "T" connector assembly to the Phase II vapor riser. Read the initial pressure of the storage tank and underground piping. If the initial pressure is greater than 0.5 inches H_2O, carefully bleed off the pressure, in accordance with all applicable safety procedures, in the storage tank and underground piping to less than 0.5 inches H_2O column.

6.12 Any electronic manometers shall be subject to warm-up and drift check before use; see Section 4.5.

7 TESTING

7.1 Open the nitrogen gas supply valve and set the regulator delivery pressure within the allowable range determined in Section 6.9, and start the stopwatch. Pressurize the vapor system (or subsystem for individual vapor return line systems) to **at least 2.2 inches H_2O** initial pressure. It is critical to maintain the nitrogen flow until the pressure stabilizes, indicating temperature and vapor pressure stabilization in the tanks. Check the test equipment using leak detecting solution or a combustible gas detector to verify that all test equipment is leak tight. Note: if a combustible gas detector is used to search for leaks, components which were certified with an allowable leak rate, such as 0.38 CFH at a pressure of two (2) inches, cannot be determined to be faulty solely on the basis of the concentration registered on the instrument.

7.1.1 If the time required to achieve the initial pressure of two (2.0) inches H_2O exceeds twice the time derived from Equation 9.3, stop the test and use liquid leak detector, or a combustible gas detector, to find leak(s) in the system.

Failure to achieve the initial starting pressure within twice the time derived from Equation 9.3 demonstrates the inability of the system to meet the performance criteria. Repair or replace the faulty component(s) and restart the test pursuant to Section 7.1.

7.2 Close and disconnect the nitrogen supply. Start the stopwatch when the pressure has decreased to the initial starting pressure of two (2.0) inches H_2O.

7.3 At one-minute intervals during the test, record the system pressure. After five minutes, record the final system pressure. See the applicable of Tables 1A (or Equation 9.1) or 1B (or equation 9.2) to determine the acceptability of the final system static pressure results. For intermediate values of ullage in Tables 1A and 1B, linear interpolation may be employed.

7.4 If the system failed to meet the criteria set forth in Table 1A or 1B (or the appropriate equation in Section 9), repressurize the system and check all accessible vapor connections using leak detector solution or a combustible gas detector. If vapor leaks in the system are encountered, repair or replace the defective component and repeat the test. Potential sources of leaks include nozzle check valves**,** nozzle vapor paths, pressure/vacuum relief valves, containment box drain valve assemblies, and plumbing connections at the risers.

7.4.1 If the facility fails to comply with the static leak test standards and the two point Phase I system utilizes overfill prevention devices in the drop tubes which were installed before July 1, 1993, and which are unable to pass the test with the dust caps removed from the product and vapor couplers (see Sec. 6.4), the test may be conducted with the caps on the couplers, as an exception.

This exception is not intended to allow bleed holes in drop tubes.

This exception expires on January 1, 2002, after which date all testing shall be conducted with the fill and vapor caps removed from two point systems. Under no circumstances may the test be conducted with the caps on coaxial Phase I couplers.

7.5 After the remaining system pressure has been relieved, remove the “T” connector assembly and reconnect the vapor recovery hose, if applicable.

7.6 If the vapor recovery system utilizes individual vapor return lines, repeat the leak test for each gasoline grade. Avoid leaving any vapor return line open longer than is necessary to install or remove the “T” connector assembly.

7.7 If the applicable CARB Executive Order requires the test to be conducted with and without the containment box cover in place, repeat the test with the cover in place. In these cases clearly specify, on Form 1, which results represent the

pressure integrity with and without the cover in place.

8 POST-TEST PROCEDURES

8.1 Use the applicable of Table 1A or 1B, or the applicable of Equations 9.1 or 9.2, to determine the compliance status of the facility by comparing the final five-minute pressure with the minimum allowable final pressure.

8.1.1 For balance Phase II systems use Table 1A or the applicable of Equation 9.1 to determine compliance.

8.1.2 For vacuum-assist Phase II systems use Table 1B or the applicable of Equation 9.2 to determine compliance.

9 CALCULATIONS

9.1 For Phase II Balance Systems, the minimum allowable five-minute final pressure, with an initial pressure of two (2.0) inches H_2O, shall be calculated as follows:

$$P_f = 2e^{\left(\frac{-760.490}{V}\right)} \quad \text{if } N = 1-6 \qquad \text{[Equation 9-1]}$$

$$P_f = 2e^{\left(\frac{-792.196}{V}\right)} \quad \text{if } N = 7-12$$

$$P_f = 2e^{\left(\frac{-824.023}{V}\right)} \quad \text{if } N = 13-18$$

$$P_f = 2e^{\left(\frac{-855.974}{V}\right)} \quad \text{if } N = 19-24$$

$$P_f = 2e^{\left(\frac{-888.047}{V}\right)} \quad \text{if } N > 24$$

where:

N = The number of affected nozzles. For manifolded systems, N equals the total number of nozzles. For dedicated plumbing configurations, N equals the number of nozzles serviced by the tank being tested.

P_f = The minimum allowable five-minute pressure, inches H_2O

V = The total ullage affected by the test, gallons

e = A dimensionless constant approximately equal to 2.718

2 = The initial starting pressure, inches H_2O

9.2 For Phase II Vacuum Assist Systems, the minimum allowable five-minute final pressure, with an initial pressure of two (2.0) inches H_2O, shall be calculated as follows:

$$P_f = 2e^{\left(\frac{-500.887}{V}\right)} \quad \text{if } N = 1\text{-}6 \qquad \text{[Equation 9-2]}$$

$$P_f = 2e^{\left(\frac{-531.614}{V}\right)} \quad \text{if } N = 7\text{-}12$$

$$P_f = 2e^{\left(\frac{-562.455}{V}\right)} \quad \text{if } N = 13\text{-}18$$

$$P_f = 2e^{\left(\frac{-593.412}{V}\right)} \quad \text{if } N = 19\text{-}24$$

$$P_f = 2e^{\left(\frac{-624.483}{V}\right)} \quad \text{if } N > 24$$

where:

N = The number of affected nozzles. For manifolded systems, N equals the number of nozzles. For dedicated plumbing configurations, N equals the number of nozzles serviced by the tank being tested.

P_f = The minimum allowable five-minute final pressure, inches H_2O

V = The total ullage affected by the test, gallons

e = A dimensionless constant approximately equal to 2.718

2 = The initial starting pressure, inches H_2O

9.3 The minimum time required to pressurize the system ullage from zero (0) to two (2.0) inches H_2O gauge pressure shall be calculated as follows:

$$t_2 = \frac{V}{(\cancel{1980}\,\underline{1520})F} \qquad \text{[Equation 9-3]}$$

where:

t_2 = The minimum time to pressurize the ullage to two inches H_2O, minutes

V = The total ullage affected by the test, gallons

F = The nitrogen flowrate into the system, CFM

~~1980~~**1520**= The conversion factor for pressure and gallons

9.4 If the policy of the local District requires an allowable tolerance for testing error, the minimum allowable five-minute final pressure, including testing error, shall be calculated as follows:

$$P_{f\text{-}E} = 2 - \left[1 + \left(\frac{E}{100}\right)\right]\left[408.9 - \left(P_f + 406.9\right)\right] \qquad \text{[Equation 9-4]}$$

where:

$P_{f\text{-}E}$ = The minimum allowable five-minute final pressure including allowable testing error, inches H_2O

E = The allowable testing error, percent

P_f = The minimum allowable five-minute final pressure calculated in Equations 9-1 or 9-2, inches H_2O

2 = The initial starting pressure, inches H_2O

408.9 = Atmospheric pressure plus the initial starting pressure, inches H_2O

406.9 = Atmospheric pressure, inches H_2O

10 REPORTING

10.1 The calculated ullage and system pressures for each five-minute vapor recovery system test shall be reported as shown in Form 1. District may require the use of alternate forms, provided they include the same minimum parameters identified in Form 1. Be sure to include the Phase I system type (two-point or coaxial), the Phase II system type, whether the system is manifolded, and the one-minute pressures during the test.

TABLE 1A

PHASE II **BALANCE** SYSTEMS

PRESSURE DECAY CRITERIA

INITIAL PRESSURE OF 2 INCHES WATER COLUMN (WC)

MINIMUM PRESSURE AFTER 5 MINUTES, INCHES WC

ULLAGE, GALLONS	NUMBER OF AFFECTED NOZZLES 01-06	07-12	13-18	19-24	>24
500	**0.44**	**0.41**	**0.38**	**0.36**	**0.34**
550	0.50	0.47	0.45	0.42	0.40
600	**0.56**	**0.53**	**0.51**	**0.48**	**0.46**
650	0.62	0.59	0.56	0.54	0.51
700	**0.67**	**0.64**	**0.62**	**0.59**	**0.56**
750	0.73	0.70	0.67	0.64	0.61
800	**0.77**	**0.74**	**0.71**	**0.69**	**0.66**
850	0.82	0.79	0.76	0.73	0.70
900	**0.86**	**0.83**	**0.80**	**0.77**	**0.75**
950	0.90	0.87	0.84	0.81	0.79
1,000	**0.93**	**0.91**	**0.88**	**0.85**	**0.82**
1,200	1.06	1.03	1.01	0.98	0.95
1,400	**1.16**	**1.14**	**1.11**	**1.09**	**1.06**
1,600	1.24	1.22	1.19	1.17	1.15
1,800	**1.31**	**1.29**	**1.27**	**1.24**	**1.22**
2,000	1.37	1.35	1.32	1.30	1.28
2,200	**1.42**	**1.40**	**1.38**	**1.36**	**1.34**
2,400	1.46	1.44	1.42	1.40	1.38
2,600	**1.49**	**1.47**	**1.46**	**1.44**	**1.42**
2,800	1.52	1.51	1.49	1.47	1.46
3,000	**1.55**	**1.54**	**1.52**	**1.50**	**1.49**
3,500	1.61	1.59	1.58	1.57	1.55
4,000	**1.65**	**1.64**	**1.63**	**1.61**	**1.60**
4,500	1.69	1.68	1.67	1.65	1.64
5,000	**1.72**	**1.71**	**1.70**	**1.69**	**1.67**
6,000	1.76	1.75	1.74	1.73	1.72
7,000	**1.79**	**1.79**	**1.78**	**1.77**	**1.76**
8,000	1.82	1.81	1.80	1.80	1.79
9,000	**1.84**	**1.83**	**1.83**	**1.82**	**1.81**
10,000	1.85	1.85	1.84	1.84	1.83
15,000	**1.90**	**1.90**	**1.89**	**1.89**	**1.89**
20,000	1.93	1.91	1.92	1.92	1.91
25,000	**1.94**	**1.94**	**1.94**	**1.93**	**1.93**

Note: For manifolded Phase II Balance Systems, the **"Number of Affected Nozzles"** shall be the total of all gasoline nozzles. For dedicated return configurations, the **"Number of Affected Nozzles"** shall be the total of those nozzles served by the tank being tested.

TABLE 1B

PHASE II **ASSIST** SYSTEMS

PRESSURE DECAY CRITERIA

INITIAL PRESSURE OF 2 INCHES WATER COLUMN (WC)

MINIMUM PRESSURE AFTER 5 MINUTES, INCHES WC

ULLAGE, GALLONS	NUMBER OF AFFECTED NOZZLES 01-06	07-12	13-18	19-24	>24
500	**0.73**	**0.69**	**0.65**	**0.61**	**0.57**
550	0.80	0.76	0.72	0.68	0.64
600	**0.87**	**0.82**	**0.78**	**0.74**	**0.71**
650	0.93	0.88	0.84	0.80	0.77
700	**0.98**	**0.94**	**0.90**	**0.86**	**0.82**
750	1.03	0.98	0.94	0.91	0.87
800	**1.07**	**1.03**	**0.99**	**0.95**	**0.92**
850	1.11	1.07	1.03	1.00	0.96
900	**1.15**	**1.11**	**1.07**	**1.03**	**1.00**
950	1.18	1.14	1.11	1.07	1.04
1,000	**1.21**	**1.18**	**1.14**	**1.10**	**1.07**
1,200	1.32	1.28	1.25	1.22	1.19
1,400	**1.40**	**1.37**	**1.34**	**1.31**	**1.28**
1,600	1.46	1.43	1.41	1.38	1.35
1,800	**1.51**	**1.49**	**1.46**	**1.44**	**1.41**
2,000	1.56	1.53	1.51	1.49	1.46
2,200	**1.59**	**1.57**	**1.55**	**1.53**	**1.51**
2,400	1.62	1.60	1.58	1.56	1.54
2,600	**1.65**	**1.63**	**1.61**	**1.59**	**1.57**
2,800	1.67	1.65	1.64	1.62	1.60
3,000	**1.69**	**1.68**	**1.66**	**1.64**	**1.62**
3,500	1.73	1.72	1.70	1.69	1.67
4,000	**1.76**	**1.75**	**1.74**	**1.72**	**1.71**
4,500	1.79	1.78	1.77	1.75	1.74
5,000	**1.81**	**1.80**	**1.79**	**1.78**	**1.77**
6,000	1.84	1.83	1.82	1.81	1.80
7,000	**1.86**	**1.85**	**1.85**	**1.84**	**1.83**
8,000	1.88	1.87	1.86	1.86	1.85
9,000	**1.89**	**1.89**	**1.88**	**1.87**	**1.87**
10,000	1.90	1.90	1.89	1.88	1.88
15,000	**1.93**	**1.93**	**1.93**	**1.92**	**1.92**
20,000	1.95	1.95	1.94	1.94	1.94
25,000	**1.96**	**1.96**	**1.96**	**1.95**	**1.95**

Note: For manifolded Phase II Assist Systems, the **"Number of Affected Nozzles"** shall be the total of all gasoline nozzles. For dedicated return configurations, the **"Number of Affected Nozzles"** shall be t he total of those nozzles served by the tank being tested.

FORM 1

SUMMARY OF SOURCE TEST DATA

SOURCE INFORMATION		FACILITY PARAMETERS
GDF Name and addresss _____ _____ _____	GDF Representative and Title GDF Phone No. ( )	PHASE II SYSTEM TYPE (Check One) Balance Hirt Red Jacket Hasstech Healy Other ____
Permit Conditions	Source: GDF Vapor Recovery System GDF # _____ A/C # _____	Manifolded? Y or N

Operating Parameters

Number of Nozzles Served by Tank #1

Number of Nozzles Served by Tank #2

Number of Nozzles Served by Tank #3

Number of Nozzles Served by Tank #4

Applicable Regulations:	VN Recommended

Source Test Results and Comments

Tank #:	1	2	3	4
1. Product Grade				
2. Actual Tank Capacity, gallons				
3. Gasoline Volume				
4. Ullage, gallons (#2-#3)				
5. Initial Pressure, inches H_2O				
6. Pressure After 1 Minute, inches H_2O				
7. Pressure After 2 Minutes, inches H_2O				
8. Pressure After 3 Minutes, inches H_2O				
9. Pressure After 4 Minutes, inches H_2O				
10. Final Pressure After 5 Minutes, inches H_2O				
11. Allowable Final Pressure				

Test Conducted by:	Test Company:	Date of Test:

Figure 1

"T" Connector Assembly

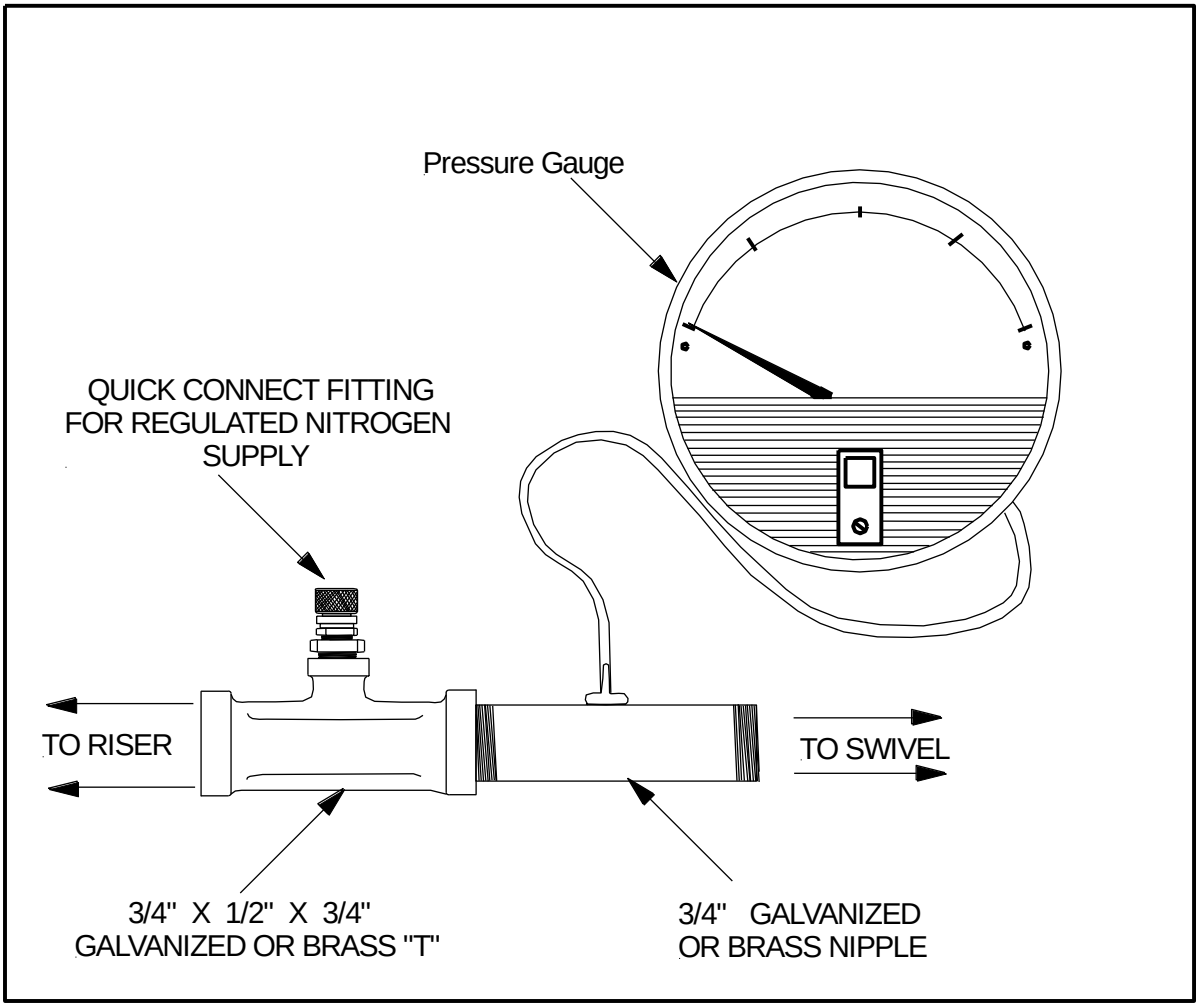

Figure 2

Vapor Coupler Integrity Assembly

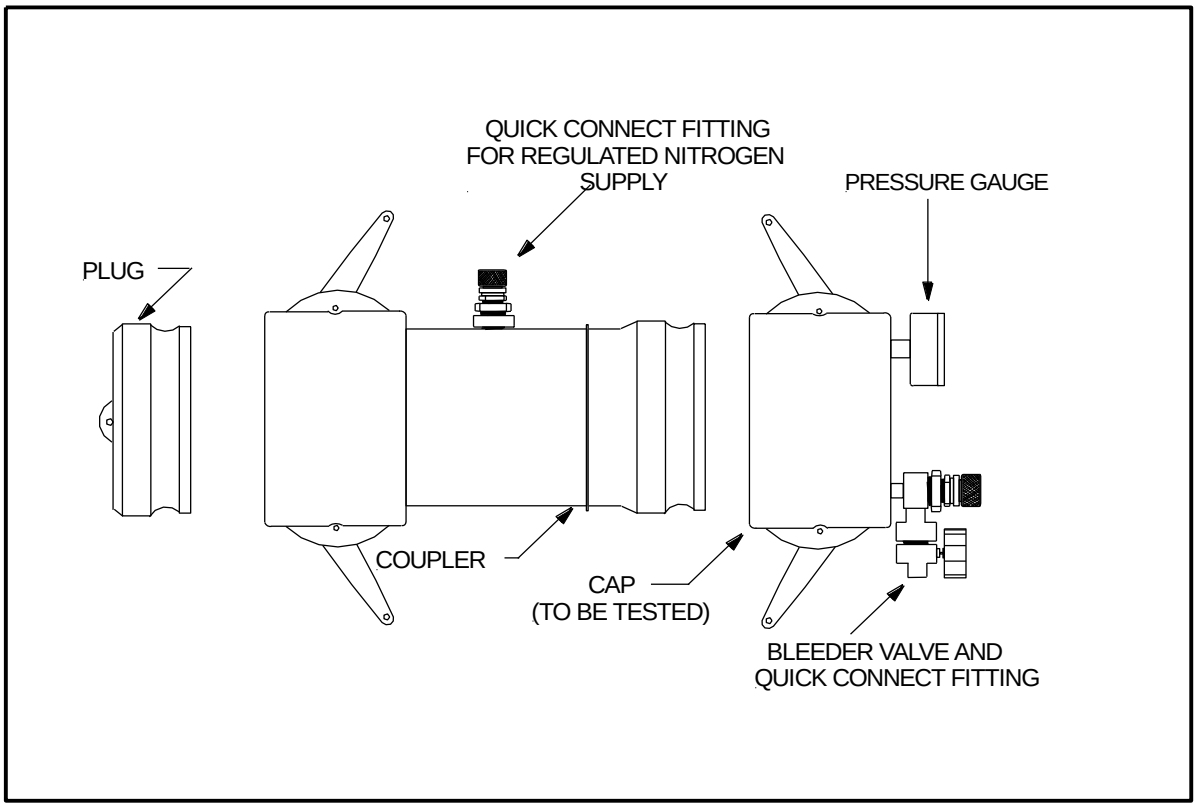

Figure 3

Vapor Coupler Test Assembly

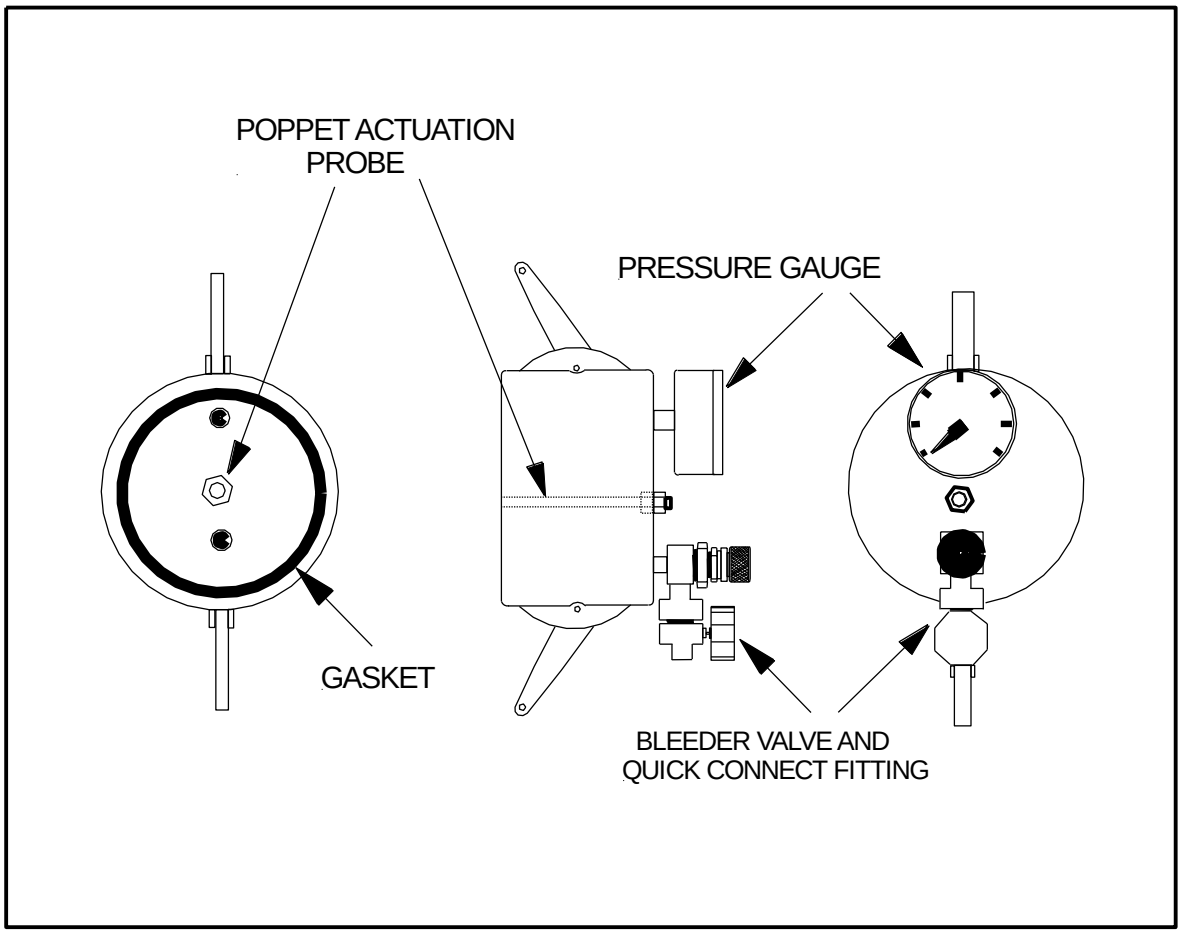

California Environmental Protection Agency

Air Resources Board

PROPOSED

Vapor Recovery Test Procedure

TP - 206.3

Determination of Static Pressure Performance of Vapor Recovery Systems at Gasoline Dispensing Facilities with Aboveground Storage Tanks

Adopted: May 2, 2008
Amended: [Insert amendment date]

Note: The text is shown in ~~strikeout~~ to indicate that it is proposed for deletion and underline to indicate that it is proposed for addition. [Bracketed text] is not part of the proposed amendment]

California Environmental Protection Agency
Air Resources Board

Proposed Vapor Recovery Test Procedure

TP-206.3

Determination of Static Pressure Performance of Vapor Recovery Systems at Gasoline Dispensing Facilities with Aboveground Storage Tanks

Definitions common to all certification and test procedures are in:

D-200 Definitions for Vapor Recovery Procedures

For the purpose of this procedure, the term "ARB or CARB" refers to the California Air Resources Board, and the term "Executive Officer" refers to the ARB Executive Officer or his or her authorized representative or designate.

1. PURPOSE AND APPLICABILITY

The purpose of this test procedure is used to quantify the vapor tightness of an aboveground storage tank installed at a gasoline dispensing facility (GDF).

This test procedure is used to determine the static pressure performance standard of a vapor recovery system during the certification process and subsequently to determine compliance with that performance standard for any installation of such a system.

The applicability of this test procedure for static pressure performance is for installations of systems with aboveground storage tanks certified by:

CP-206 Certification Procedure for Vapor Recovery Systems at Gasoline Dispensing Facilities Using Aboveground Storage Tanks

2. PRINCIPLE AND SUMMARY OF TEST PROCEDURE

The entire vapor recovery system is pressurized with nitrogen to two (2.0) inches water column. The system pressure is then allowed to decay for five (5) minutes. The acceptability of the final pressure is based upon the vapor system ullage.

3. BIASES AND INTERFERENCES

3.1 For tanks equipped with vapor recovery processor systems, the processor must be isolated or the processor outlet is capped. Leakage at the processor will indicate a system component leak.

3.2 Leaks in the test equipment will bias the results toward noncompliance. Prior to conducting the test, this bias is eliminated by conducting a leak check of the equipment.

3.3 There shall be no Phase I bulk product deliveries into the storage tank(s) within three (3) hours prior to this test. There shall be no product dispensing within thirty (30) minutes prior to this test. There shall be no Air to Liquid Volumetric Ratio Test (TP-201.5 or equivalent) conducted within the twenty-four (24) hour period immediately prior to this test.

3.4 Product levels less than four (4) inches above the highest opening at the bottom of the submerged drop tube may bias the test toward noncompliance.

3.5 For systems which utilize a destructive processor, power to the collection unit and the processor shall be turned off during testing.

3.6 For vacuum-assist systems with positive displacement vacuum pumps, which locate the vacuum producing device in-line between the Phase II vapor riser and the storage tank, the following requirements shall apply:

3.6.1 A valve shall be installed at the vacuum producing device. When closed, this valve shall isolate the vapor passage downstream of the vacuum producing device.

3.6.2 The upstream vapor passage (nozzle to vacuum producing device) shall also be tested. Methodology for this test shall be submitted to the Executive Officer for approval prior to submission of test results or shall be conducted in accordance with the procedures set forth in the applicable ARB Executive Order.

4. EQUIPMENT SPECIFICATIONS

4.1 Care must be exercised to prevent exposure of testing personnel to benzene, a carcinogen. Use of appropriate safety gear such as gloves and respirator is suggested.

4.2 Use commercial grade nitrogen in a high pressure cylinder, equipped with a two-stage pressure regulator and one psig pressure relief valve. The minimum and maximum nitrogen feed rates into the system shall be 1 and 5 cfm (cubic feet per minute) respectively.

4.3 The System Leak Test Assembly is shown in Figure 1. Use a modified vapor cap compatible with the Phase I vapor adaptor. The vapor cap shall be equipped with a nitrogen inlet port.

4.4 Use a Dwyer flowmeter, Model RMC-104, or equivalent, to determine the required pressure setting of the delivery pressure gauge on the nitrogen supply pressure regulator. This pressure shall be set such that the nitrogen flowrate is between 1.0 and 5.0 CFM.

4.5 Electronic pressure measuring devices or digital pressure indicators shall be used. The maximum full-scale range of the device shall be 10 inches water column. The minimum accuracy shall be 1.5 percent of full scale and the pressure measuring device shall be readable to the nearest 0.01 inches water column. A copy of the most current calibration of shall be kept with the equipment. Instrument shall be calibrated every six months.

4.6 Stopwatch. Use a stopwatch accurate to within 0.10 seconds to time the one-minute pressure stabilization period, and the five-minute decay test period.

4.7 Leak Detection Solution or a Combustible Gas Indicator. Any liquid solution designed to detect vapor leaks may be used to verify the pressure integrity of system components during this test; or a combustible gas detector that complies with the requirements of USEPA Method 21, "Determination of Volatile Organic Compounds Leaks", 40 CFR Ch. 1, Part 60, App. A-7 (36 FR 24877, December 23, 1971) and section 5 of this test procedure. Personnel shall assume that the combustible gas detector will be operated in an explosive atmosphere and comply with all pertinent regulations.

4.8 Traffic Cones. If needed for safety, use traffic cones to encircle the area while the test is being conducted.

5. CALIBRATION PROCEDURE

5.1 The electronic pressure measuring device or digital pressure indicator shall be calibrated using a National Institute of Standards and Technology (NIST) traceable standard or reference standard traceable to NIST within 180 days prior to conducting the testing and the calibration. In addition, calibration shall be conducted after any repairs or alterations to the pressure measuring or indicating device. Calibrations shall be conducted per manufacturer's instructions, ensuring it complies with the minimum accuracy requirement of 1.5 percent of full scale. A copy of the most current calibration of shall be kept with the equipment.

5.2 The flowmeter shall be calibrated every 180 days using a NIST traceable standard or a reference standard traceable to NIST as specified by the manufacturer's instructions.

5.3 Calibrate the combustible gas detector per the manufacturer's recommendation. Calibration gas shall be certified traceable to NIST-SRM.

5.3.1 The calibration gases must be certified according to one of the following options:

5.3.1.1 The EPA Traceability Protocol for Assay and Certification of Gaseous Calibration Standards (EPA-600/R-97/121 September 1997), or

5.3.1.2 To an analytical accuracy of $\pm$ 2 percent, traceable to a reference material approved by the National Institute of Standards and Technology (NIST) and recertified annually.

5.3.2 Documentation. Information on calibration gas cylinders shall be entered into a log identifying each cylinder by serial number. Sufficient information shall be maintained to allow a determination of the certification status of each calibration gas and shall include: (1) the data put in service, (2) assay result, (3) the dates the assay was performed, (4) the organization and specific personnel who performed the assay, and (5) the date taken out of service.

6. PRE-TEST PROCEDURES

6.1 Place the traffic cones around the perimeter of the testing area, allowing sufficient space to safely conduct the test.

6.2 Electronic manometers shall have a warm-up period of at least 15 minutes followed by a five-minute drift check. If the drift exceeds 0.01 inches water column, the instrument should not be used.

6.3 Record system information on Form 1.

6.4 The minimum ullage during the test shall be 25 percent of the tank capacity and the maximum ullage during the test shall be 75 percent of the tank capacity. For manifolded tanks, the minimum ullage during the test shall be 25 percent of the aggregate tank capacity and the maximum ullage during the test shall be 75 percent of the aggregate tank capacity.

6.5 Determine the allowable system leak rate using Equation 8-1 in section 8.

6.6 Ensure the nozzle(s) are properly hung in the dispenser boot and all dispenser cabinet covers are in place. No dispensing shall be allowed during the test.

6.7 If a steel-braided nitrogen supply line is not used, a ground strap should be employed during the introduction of nitrogen into the system.

6.8 For two-point Phase I systems, this test shall be conducted with the dust caps removed from both the product and the vapor coupler.

6.9 If the Phase I containment box is equipped with a drain valve, this test shall be conducted with the drain valve installed.

6.10 Conduct visual inspection of vapor recovery components to ensure no cracks, tears, or other anomalies are present that may cause a failure of the leak test.

6.11 Install system leak test assembly. An example is shown in Figure 1. Additional examples can be found in TP-201.3 (Figures 1-3).

7. TEST PROCEDURE

7.1 Observe the initial storage tank pressure. If the initial pressure is greater than one-half (0.50) inch H_2O gauge, proceed to Section 7.1.1. If the initial pressure is less than zero (0.00) inch H_2O gauge, proceed to Section 7.1.2. In the case where the storage tank pressure is between 0.00 and 0.50 inches H_2O, proceed to Section 7.2.

7.1.1 If the initial storage tank pressure is greater than one-half (0.50) inch H_2O gauge, carefully bleed off the excess pressure in accordance with all applicable safety procedures for a maximum of 30 seconds. Do not allow the tanks to remain open to atmosphere for more than 30 seconds or the ingestion of fresh air and additional vapor growth may result. Start the stopwatch and measure the storage tank pressure for three (3) minutes. If the 3-minute pressure exceeds 0.50 inches H_2O or continues to change at a rate exceeding $\pm$0.02 inches H_2O in 3 minutes, repeat this Section. Several attempts may be required.

7.1.2 If the initial storage tank pressure is less than zero (0.00) inches H_2O gauge, slowly introduce nitrogen so that the storage tank pressure is between zero (0.00) and one-half (0.50) inches H_2O gauge. Start the stopwatch and measure the storage tank pressure for three (3) minutes. If the 3-minute pressure is not between 0.00 and 0.50 inches H_2O or continues to change at a rate exceeding $\pm$0.02 inches H_2O in 3 minutes, repeat this Section.

7.2 Open the nitrogen gas supply valve, regulate the delivery pressure to at least 10 psig, and pressurize the vapor system (or subsystem for individual vapor return line systems) to or slightly above 2 inches water column. The minimum and maximum nitrogen feed rates in to the system shall be 1 and 5 cfm (cubic feet per minute) respectively. It is critical to maintain the flow until both flow and pressure stabilize, indicating temperature and pressure stabilization in the tanks. Close the nitrogen supply valve.

7.3 Check the system leak test assembly using leak detection solution to verify that the test equipment is leak tight. Quickly remove the vapor cap assembly. Leak check the vapor poppet, tank fittings, tank gauges, emergency vent, pipe fittings, hose fittings, test equipment and other vapor connections that have a no leak standard. Use liquid leak detection solution or a combustible gas detector to find leak(s). ~~If leaks are noted, components shall be replaced prior to continuing with this test procedure.~~

7.4 Re-open the nitrogen supply valve, and reset the tank pressure to reestablish a pressure slightly greater than 2 inches water column. Close the nitrogen supply valve and start the stopwatch when the pressure reaches an initial pressure of 2.0 inches of water column.

7.5 At one-minute intervals during the test, record the system pressure on Form 1. After five minutes, record the final system pressure on Form 1. Carefully remove the system leak test assembly.

7.6 Use Equation 8-1 in section 8 or Table 1 to determine the compliance status of the facility by comparing the final five-minute pressure with the minimum allowable pressure.

Figure 1

Typical System Leak Test Assembly

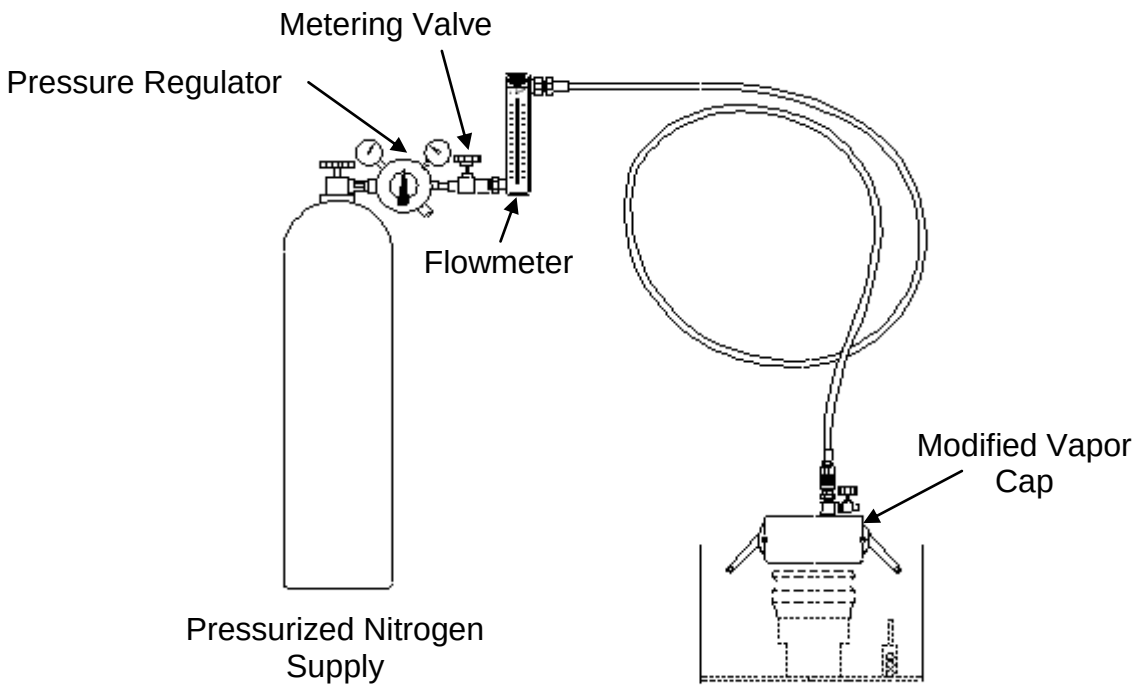

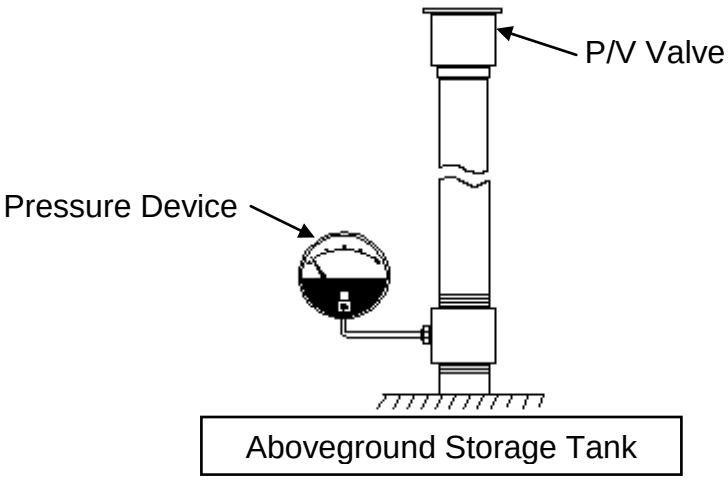

8. CALCULATING RESULTS

Minimum Allowable Pressure

The minimum allowable pressure after five (5) minutes, with an initial pressure of 2.0 inches water column, shall be calculated as shown below, or obtained from Table 1:

Equation 8-1

$$P_f = 2e^{(-223.9/V)}$$

where:

P_f	=	The minimum pressure after 5 minutes, inches water column
V	=	The ullage of the system, gallons
e	=	Constant equal to 2.71828
2	=	The initial starting pressure, inches water column
-223.9	=	Decay constant for a 5 minute test

9. REPORTING RESULTS

Report the results as indicated on Form 1. District may require the use of alternate forms, provided they include the same minimum parameters identified in Form 1.

10. ALTERNATIVE TEST PROCEDURES

This procedure shall be conducted as specified. Any modifications to this test procedure shall not be used for certification unless prior written approval has been obtained from the ~~ARB~~ Executive Officer, pursuant to Section 15 of Certification Procedure CP-206.

Form 1

Summary of Source Test Data

Static Pressure Performance Test	
GDF Name and Address: GDF Representative and Title: GDF Phone #: GDF # _____ Manifolded? Y or N	PHASE II SYSTEM TYPE (Check One) Balance _____ VacAssist _____ Other _____ Manufacturer: _____ Permit Conditions:

TANK # :	1	2	3	4
1. Product Grade				
2. Actual Tank Capacity, gallons				
3. Gasoline Volume				
4. Ullage, gallons (ullage = capacity-volume)				
5. Initial Pressure (inches water column)				
6. Pressure After 1 Minute				
7. Pressure After 2 Minutes				
8. Pressure After 3 Minutes				
9. Pressure After 4 Minutes				
10. Final Pressure After 5 Minutes				
11. Allowable Final Pressure				

Test Conducted by:	Test Company:
Date of Test:	

TABLE 1
Leak Rate Criteria

ULLAGE (GALLONS)	MINIMUM PRESSURE AFTER 5 MINUTES, (INCHES OF WATER COLUMN)
100	**0.21**
150	0.45
200	**0.65**
250	0.82
300	**0.95**
350	1.05
400	**1.14**
450	1.22
500	**1.28**
550	1.33
600	**1.38**
650	1.42
700	**1.45**
750	1.48
800	**1.51**
850	1.54
900	**1.56**
950	1.58
1,000	**1.60**
1,200	1.66
1,400	**1.70**
1,600	1.74
1,800	**1.77**
2,000	1.79
2,200	**1.81**
2,400	1.82
2,600	**1.83**
2,800	1.85
3,000	**1.86**
3,500	1.88
4,000	**1.89**
4,500	1.90
5,000	**1.91**
6,000	1.93
7,000	**1.94**
8,000	1.94
9,000	**1.95**
10,000	1.96
15,000	**1.97**
20,000	1.98