APPENDIX H

Proposed Amendments to TP-204.3: Determination of Leak(s)

California Environmental Protection Agency

Air Resources Board

PROPOSED

Vapor Recovery Test Procedures

TP-204.3

Determination of Leak(s)

Adopted: April 12, 1996
Amended: March 17, 1999
Amended [insert Amendment Date]

Note: The text is shown in ~~strikeout~~ to indicate that it is proposed for deletion and underline to indicate that it is proposed for addition. [Bracketed text] is not part of the proposed amendments.

California Environmental Protection Agency
Air Resources Board

Vapor Recovery Test Procedure

TP-204.3

Determination of Leak(s)

1 APPLICABILITY

Definitions common to all certification and test procedures are in:

D-200 Definitions for ~~Certification Procedures and Test Procedures for~~ Vapor Recovery Procedures~~Systems~~

For the purpose of this procedure, the term "ARB" or “CARB” refers to the ~~State of~~California Air Resources Board, and the term "~~ARB~~ Executive Officer" refers to the Executive Officer of the ARB or his or her authorized representative or designee ~~delegate~~.

1.1 General Applicability

The procedure is used to determine ~~applies to the determinationof~~the leak-tightness of vapor control systems used in the loading of gasoline cargo tanks. It may be utilized to determine the leak-tightness of gasoline cargo tanks during loading without taking the delivery tank out of service and to determine the leak-tightness of vapor control systems at gasoline terminals and bulk plants at any time. It is also ~~applicable for gasoline cargo tanks during loading operations and is~~ effective to determine leak tightness when ~~only if~~ the vapor control system does not create back-pressure in excess of the pressure limits of the cargo tank certification ~~leak~~ test (18 inches of water column (WC~~gauge~~) referenced in CP-204, Certification Procedure for Vapor Recovery Systems of Cargo Tanks. ~~This procedure does not supersede any district local APCD procedure regarding gasoline loading operations which are more stringent.~~

~~1.2 Determinations of Compliance and Violation~~

~~Determinations of certain modes of compliance with and violation of certification specifications are outlined in § 9.~~

~~1.3 Modifications~~

~~Modification of this procedure may be necessary for vapors and fluids other than the hydrocarbon vapors associated with the dispensing of gasoline.~~

~~Any modification of this method shall be subject to approval by the ARB Executive Officer.~~

2 PRINCIPLE AND SUMMARY OF TEST PROCEDURE

A portable instrument is used to detect VOC leaks from individual sources. A leak definition concentration based on a reference compound is specified in each applicable regulation. This procedure is intended to locate and classify leaks only, and is not to be used as a direct measure of mass emission rates from individual sources.

~~(See ALTERNATIVE TEST PROCEDURES, EPA Method 21.)~~

~~In principle, this test procedure is intended to be consistent with EPA Method 21.~~

~~While this test procedure provides more detail on some matters than EPA Method 21, nothing in this procedure shall be read, interpreted, or applied in a manner inconsistent with EPA Method 21.~~

3 BIASES AND INTERFERENCES

Individual Vapor Leak Check Duration

The duration ~~results~~ of vapor leak checks will ~~are~~systematically bias~~ed~~ the results positively (toward a determination of violation). ~~by leak check duration.~~ To control this bias, leak checks shall be performed individually with a fresh air purge between each leak check. Each leak check shall have a duration of less than twice the instrument response time (typically, less than sixteen seconds). ~~Longer l~~Leak checks with a duration of greater than twice the instrument response time are invalid. The probe must be purged with fresh air for more than two instrument response times (more than sixteen seconds) between individual leak checks.

~~4 SENSITIVITY, RANGE, AND PRECISION~~

~~This section is reserved for future specification.~~

4~~5~~ EQUIPMENT AND SUPPLIES

~~5~~4.1 Manometer

Liquid manometer, or equivalent, capable of measuring up to 7500 pascals (30 inches WC~~H_2O~~) gauge pressure with ± 25 pascals (0.1 inch ~~H_2O~~WC) precision.

4~~5~~.2 Combustible gas detector

A portable hydrocarbon gas analyzer with associated sampling line and probe using catalytic oxidation to detect and measure concentrations of combustible

gas in air.

4~~5~~.2.1 Safety

Personnel shall assume that the combustible gas detector will be operated in an explosive atmosphere and comply with all pertinent regulations.

4~~5~~.2.2 Range

Minimum range of 0-100 percent of the lower explosive limit (LEL) expressed as propane (0 to 21,000 ppm).

4~~5~~.2.3 Probe Diameter

Sampling probe internal diameter of 0.62~~3~~5 cm (1/4 inch).

4~~5~~.2.4 Probe Length

Probe sampling line of sufficient length for easy maneuverability during testing.

4~~5~~.2.5 Response Time

Response time to 90 percent of the final stable reading shall be ~~of~~less than 8 seconds for detector with sampling line and probe attached.

4~~5~~.3 Stopwatch

Accurate and precise to within ±0.2 sec.

4~~5~~.4 Graduated cylinder

Glass or plastic. 1 milliliter (mL) graduations, minimum volume 50 mL.

5~~6~~ CALIBRATION PROCEDURE

Calibration is part of each application of the test procedure, see ~~§~~section 6~~8~~.2.

~~7 PRE-TEST PROTOCOL~~

~~This section is reserved for future specification.~~

6~~8~~ TEST PROCEDURE

6~~8~~.1 Pressure

Place a pressure tap in the terminal or bulk plant vapor control system, as close as reasonably possible to the connection with the cargo tank and before any check valves in the terminal or bulk plant recovery system. Connect the manometer. Record the pressure periodically during testing.

6~~8~~.2 Calibration

Calibrate the combustible gas detector with 2.1 percent by volume (21,000 ppm) propane in air for 100 percent LEL response. Calibration gas shall be traceable to NIST-SRM.

6~~8~~.3 Monitoring Procedure - Vapor Leaks

During loading, check the periphery of all potential sources of leakage of the cargo tank and of the terminal or bulk plant, vapor collection system with a combustible gas detector.

6~~8~~.3.1 Probe Distance

For a mobile leak source (e.g. cargo tank) the detector probe inlet shall be 2.5 cm from the potential leak source. The distance can be maintained during monitoring by putting a 2.5 cm extension on the probe tip.

For a stationary leak source (e.g. loading rack) the probe tip shall be placed at the surface of the suspected leak interface except for a moving part, such as a rotating shaft, for which the probe tip distance shall be 1 cm. The distance can be maintained during monitoring by putting a 1 cm extension on the probe tip.

6~~8~~.3.2 Probe Movement

Move the probe slowly (approximately 4 cm/sec). If there is any meter deflection at a potential leak source, move the probe to locate the point of highest meter response.

6~~8~~.3.3 Probe Position

The probe inlet shall be positioned in the path of the vapor flow from a leak so as to maximize the measured concentration.

6~~8~~.3.4 Wind

Attempt to block the wind from the area being monitored.

6~~8~~.3.5 Detector Response Time

The detector response time must be equal to or less than 8 seconds and the detector shall not probe any potential leak source for longer than twice the detector response time.

6~~8~~.3.6 Recording

Record the highest detector reading and location for each leak being monitored.

6~~8~~.4 Monitoring Procedure - Liquid Leaks

Check cargo tank and bulk plant or terminal system for liquid leaks. Count the number of drops for two minutes.

6~~8~~.4.1 For Liquid Leaks during Disconnect

Capture liquid lost upon disconnect and measure the volume using graduated cylinder.

6~~8~~.4.2 Recording

For liquid leaks, record location and number of drops per minute. For liquid leaks during disconnect, record location (loading arm, recovery arm), cargo tank and volume for each consecutive disconnects.

~~9 DETERMINATIONS OF COMPLIANCE AND VIOLATION~~

~~Determinations of certain modes of compliance with and violation of certification specifications are outlined below.~~

~~**Note:** Regarding liquid leaks from cargo tanks, and regarding vapor and liquid leaks from bulk plant and terminal equipment; the compliance status determined by this procedure is the final determination. Regarding vapor leaks from cargo tanks, the final determination of compliance status depends upon the application of all of the applicable requirements of CP-204.~~

~~The compliance status determined by this procedure shall not supersede any compliance status determination by TP-204.1 or TP-204.2.~~

~~For convenience, the~~The ~~performance standards shall be specified below as they appear in CP-204 § 4.2:~~

~~**Vapor and Liquid Leak Performance Standards**~~

~~The performance standards for leak(s) from any cargo tank is that no liquid leak or~~

~~vapor leak shall occur from any cargo tank according to the following definitions:~~

> ~~**Note:** A cargo tank shall not be required to comply with any leak criteria or performance standards except those that relate directly to the cargo tank; such leaks are "cargo tank leaks"; examples of leaks which are not cargo tank leaks are:~~
>
> ~~(1) leaks involving bulk plant or terminal equipment including~~
>
> ~~(2) leaks from couplings between cargo tank equipment and bulk plant or terminal equipment, unless the coupling was brought into the bulk plant or terminal facility on the cargo tank vehicle.~~
>
> ~~Leaks of types (1) and (2) are not evidence of non-compliance of the cargo tank per this procedure.~~

~~(1) Vapor Leak~~

~~A vapor leak is defined to be any source of gasoline vapors which causes a combustible gas detector meter reading exceeding 100 percent of the LEL when measured at a distance of one inch (2.5 cm) for a mobile leak source (e.g. cargo tank) or 1 cm for a stationary leak source (e.g. loading rack). A marginal vapor leak may be verified by conducting a pressure/vacuum leak test. A vapor leak does not include any vapor resulting from liquid spillage or leakage.~~

~~(2) Liquid Leak~~

~~A liquid leak is defined to be the dripping of liquid organic compounds at a rate in excess of three (3) drops per minute from any single leak source other than the liquid fill line and vapor line disconnect operations. A liquid leak from liquid fill line and vapor line disconnect operations is defined to be:~~

~~(1) more than two (2) milliliters liquid drainage per disconnect from a top loading operation; or~~

~~(2) more than ten (10) milliliters liquid drainage from a bottom loading operation.~~

~~Such liquid drainage for disconnect operations shall be determined by computing the average drainage from three consecutive disconnects at any one permit unit.~~

~~Other Performance Standards~~

~~Other performance standards may be required at the applicant's request or based on evaluation by the ARB Executive Officer.~~

~~10 QUALITY ASSURANCE / QUALITY CONTROL (QA/QC)~~

~~This section is reserved for future specification.~~

~~11 RECORDING DATA~~

~~This section is reserved for future specification.~~

~~12 CALCULATING RESULTS~~

~~This section is reserved for future specification.~~

~~13 REPORTING RESULTS~~

~~This section is reserved for future specification.~~

7~~14~~ ALTERNATE ~~IVE TEST~~ PROCEDURES

7~~14~~.1 U.S. EPA Method 21 - Determination of Volatile Organic Compound Leaks

U.S. EPA Method 21 is an approved alternative procedure as it applies to the performance of this test procedure subject to the provisions of 6.3.1 regarding probe distances.

7~~14~~.2 Other Alternative Test Procedures

This test procedure shall be conducted as specified. Modifications to this test procedure shall not be used to determine compliance unless prior written approval has been obtained from the Executive Officer, pursuant to section 5 of Certification Procedure 204 (CP-204). ~~Test procedures, other than specified above, shall only be used if prior written approval is obtained from the ARB Executive Officer. In order to secure the ARB Executive Officer's approval of an alternative test procedure, the applicant is responsible for demonstrating to the ARB Executive Officer's satisfaction that the alternative test procedure is equivalent to this test procedure.~~

~~(1) Such approval shall be granted on a case-by-case basis only. Because of the evolving nature of technology and procedures for vapor recovery systems, such approval shall not be granted in subsequent cases without a new request for approval and a new demonstration of equivalency.~~

~~(2) Documentation of any such approvals, demonstrations, and approvals shall be maintained in the ARB Executive Officer's files and shall be made available upon request.~~

~~15 REFERENCES~~

~~This section is reserved for future specification.~~

8~~16~~ FIGURES

Each figure provides an illustration of an implementation which conforms to the requirements of this test procedure; other implementations which so conform are acceptable, too. Any specifications or dimensions provided in the figures are for example only, unless such specifications or dimensions are provided as requirements in the text of this or some other required test procedure.

Figures 1 and 2 provide illustrations of a combustible gas meter alone and in use.

FIGURE 1

Phase I Leak Check (View of Combustible Gas Detector)

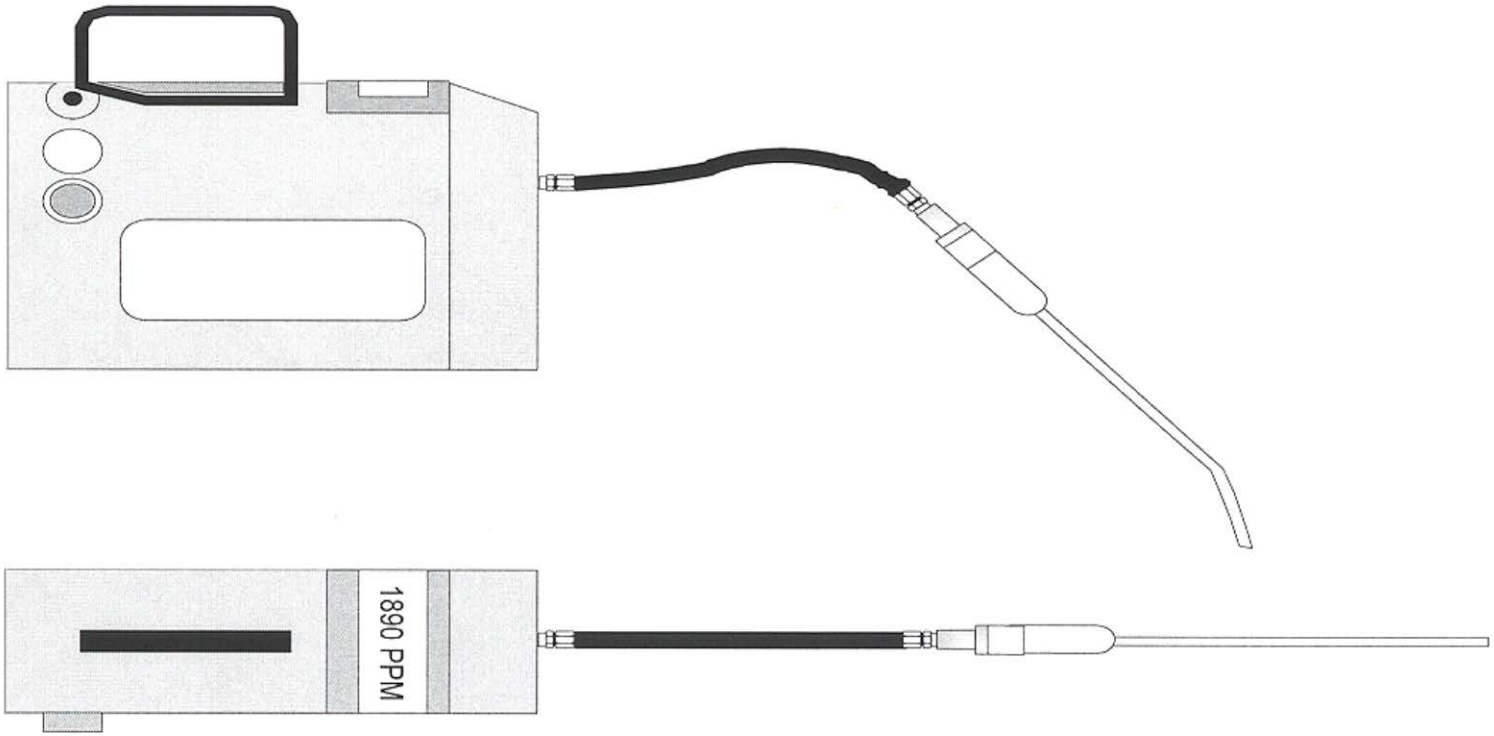

TP 204.3 F.1/ B. CORDOVA '95

FIGURE 2

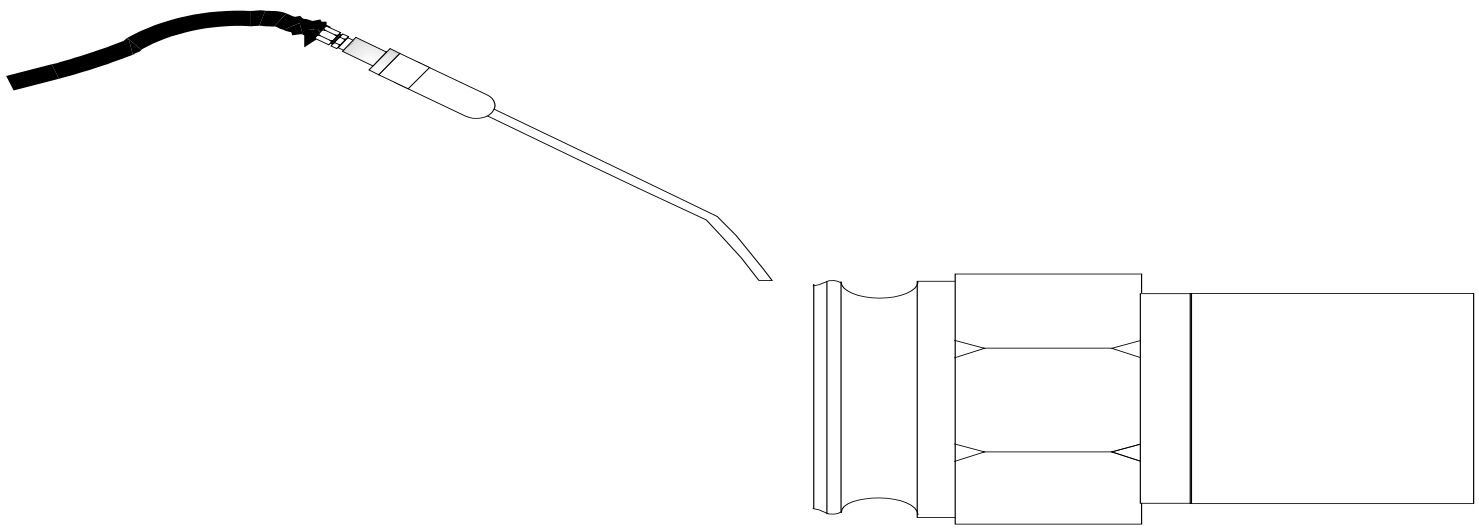

TP 204.3 F.2/ B. CORDOVA '95