APPENDIX C

Proposed Amendment to CP-201: Certification Procedure for Vapor Recovery Systems at Gasoline Dispensing Facilities

Page Intentionally Blank

California Environmental Protection Agency

Air Resources Board

Vapor Recovery Certification Procedure

CP - 201

Certification Procedure for Vapor Recovery Systems at Gasoline Dispensing Facilities

Adopted: December 9, 1975
Amended: March 30, 1976
Amended: August 9, 1978
Amended: December 4, 1981
Amended: September 1, 1982
Amended: April 12, 1996
Amended: April 28, 2000
Amended: February 1, 2001
Amended: June 1, 2001
Amended: July 25, 2001
Amended: July 3, 2002
Amended: March 7, 2003
Amended: July 1, 2003
Amended: October 8, 2003
Amended: August 6, 2004
Amended: February 9, 2005
Amended: May 25, 2006
Amended: January 9, 2013
Amended: [Insert Amended Date]

[Note: The text is shown in ~~strikeout~~ to indicate that it is deleted and underline to indicate that it is added. [Bracketed text] is not part of the proposed amendments.**]**

CP-201
TABLE OF CONTENTS

Section	Title	Page
1	GENERAL INFORMATION AND APPLICABILITY	1
1.1	~~Legislative and~~ Regulatory Requirements of Other State Agencies	1
1.2	Requirement to Comply with All Other Applicable Codes and Regulations	2
2	PERFORMANCE STANDARDS AND SPECIFICATIONS	2
2.1	Performance Standards	2
2.2	Performance Specifications	2
2.3	Innovative Systems	3
2.4	Additional or Amended Performance Standards or Performance Specifications	3
3	PHASE I PERFORMANCE STANDARDS AND SPECIFICATIONS	6
3.1	Phase I Efficiency/Emission Factor	7
3.2	Static Pressure Performance	7
3.3	Phase I Drop-Tubes with Over-Fill Prevention	8
3.4	Phase I Product and Vapor Adaptors	8
3.5	Pressure Vacuum Vent Valves	9
3.6	Spill Containers	9
3.7	Connections and Fittings	10
3.8	Materials Compatibility with Fuel Blends	10
4	PHASE II PERFORMANCE STANDARDS AND SPECIFICATIONS APPLICABLE TO ALL PHASE II VAPOR RECOVERY SYSTEMS	12
4.1	Phase II Emission Factor/Efficiency	13
4.2	Static Pressure Performance	14
4.3	Spillage	15
4.4	Compatibility of Phase II Systems with Vehicles Equipped with ORVR Systems	16
4.5	Compatibility of Phase II Systems with Phase I Systems	16
4.6	Underground Storage Tank Pressure Criteria	16
4.7	Nozzle Criteria	17
4.8	Liquid Retention	18
4.9	Nozzle/Dispenser Compatibility	18
4.10	Unihose Multi-Product Dispenser (MPD) Configuration	18
4.11	Vapor Return Piping	18
4.12	Liquid Condensate Traps	19
4.13	Connections and Fittings	19
5	PHASE II PERFORMANCE STANDARDS AND SPECIFICATIONS APPLICABLE TO BALANCE VAPOR RECOVERY SYSTEMS	21
5.1	Balance Nozzle Criteria	22
5.2	Dynamic Pressure Drop Criteria for Balance Systems	22
5.3	Liquid Removal Systems	23
6	PHASE II PERFORMANCE STANDARDS AND SPECIFICATIONS APPLICABLE TO ALL ASSIST VAPOR RECOVERY SYSTEMS	23
6.1	Nozzle Criteria	23

Section	Title	Page
6.2	Air to Liquid Ratio	24
7	PHASE II PERFORMANCE STANDARDS AND SPECIFICATIONS APPLICABLE TO ASSIST SYSTEMS UTILIZING A CENTRAL VACUUM UNIT	24
7.1	Vacuum Levels Generated by the Collection Device	25
7.2	Maximum Number of Refueling Points per Vacuum Device	25
8	PHASE II PERFORMANCE STANDARDS AND SPECIFICATIONS APPLICABLE TO ASSIST SYSTEMS UTILIZING A DESTRUCTIVE OR NON-DESTRUCTIVE PROCESSOR	25
8.1	Processor Emission Factor	26
8.2	Hazardous Air Pollutants from Destructive Processors	26
8.3	Maximum Hydrocarbon Feedrate to Processor	26
8.4	Typical Load on the Processor	26
8.5	Processor Operation Time	27
9	IN-STATION DIAGNOSTIC SYSTEMS	27
9.1	General Requirements	27
9.2	Monitoring Requirements	28
9.3	Records	31
9.4	Tampering Protection	32
9.5	Readiness/Function Code	32
9.6	Stored Vapor Recovery System Conditions	32
9.7	Challenge Mode Testing	33
9.8	Electronic Access	33
10	CERTIFICATION OF VAPOR RECOVERY SYSTEMS	33
11	APPLICATION PROCESS	34
11.1	Description of Vapor Recovery System	35
11.2	Description of In-Station Diagnostics	37
11.3	Compatibility	37
11.4	Reliability of the System	38
11.5	Installation, Operation and Maintenance of the System	38
11.6	Evidence of Financial Responsibility	39
11.7	Warranty	39
11.8	Test Station	39
11.9	Notification of Certified System Component Manufacturers	39
11.10	Equipment Defect Identification and Test Protocols	40
11.11	Challenge Modes and Test Protocols	40
11.12	Other Information	40
12	EVALUATION OF THE APPLICATION	40
12.1	Performance Standards and Specifications	41
12.2	Bench and Operational Testing Results	41
12.3	Evaluation of System Concept	41
12.4	Materials Specifications and Compatibility with Fuel Formulations	41
12.5	Installation, Operation and Maintenance Manuals	41
12.6	Equipment Defect Identification	41

Section	Title	Page
12.7	Challenge Mode Determination	42
13	VAPOR RECOVERY SYSTEM CERTIFICATION TESTING	42
13.1	Test Site for Field Testing of Vapor Recovery Systems	43
13.2	Bench Testing of Components	44
13.3	Operational test of at Least 180 Days	44
13.4	Equipment Defect and Challenge Mode Testing	45
13.5	Efficiency and/or Emission Factor Test	46
13.6	Vehicle Matrix	46
14	ALTERNATE TEST PROCEDURES AND INSPECTION PROCEDURES	47
14.1	Alternate Test Procedures for Certification Testing	47
14.2	Request for Approval of Alternate Test Procedure	47
14.3	Response to Request	47
14.4	Testing of Alternate Test Procedures	47
14.5	Documentation of Alternate Test Procedures	48
14.6	Inspection Procedures	48
15	DOCUMENTATION OF CERTIFICATION	48
15.1	Executive Order	48
15.2	Summary of Certification Process	48
16	DURATION AND CONDITIONS OF CERTIFICATION	49
16.1	Duration of System Certification	49
16.2	One Vapor Recovery System per UST System	49
16.3	Certification Not Transferable	49
16.4	Financial Responsibility	49
16.5	Warranty	50
16.6	Installation, Operation and Maintenance of the System	50
16.7	Identification of System Components	51
16.8	Compliance Enforcement	51
16.8	Revocation of Certification	51
17	CERTIFICATION RENEWAL	52
17.1	Request for Renewal	52
17.2	Review Request	53
17.3	Evaluation of System Deficiencies	53
17.4	Letter of Intent	53
17.5	Renewal of Executive Order	54
17.6	Denial of Executive Order Renewal	54
18	AMENDMENTS TO EXECUTIVE ORDERS	54
18.1	Request for Amendment	55
18.2	Review of Request	55
18.3	Testing	57
18.4	Letter of Intent	57
18.5	Issuance of Executive Order	57
19	REPLACEMENT OF COMPONENTS OR PARTS OF A SYSTEM WITH A TERMINATED, REVOKED, SUPERSEDED OR EXPIRED CERTIFICATION	57

Section	Title	Page
19.1	Component and Replacement Parts……	57
19.2	Components or Replacement Part Not Meeting Specifications……	58
19.3	Components or Part Not Certified with System and Not Meeting Specifications…	58
19.4	Procedure for Approval of Replacement Part……	58
20	REQUIREMENTS FOR, AND CERTIFICATION OF, LOW PERMEATION HOSES…..	59
20.1	Request for Certification……..	59
20.2	Hose Lengths……	60
20.3	Identification of Certified Hose……	60

LIST OF TABLES

Table	Title	Page
2-1	Effective and Operative Dates for Phase I and Phase II Vapor Recovery Performance Standards and Specifications	5
3-1	Phase I Performance Standards and Specifications Applicable to All Phase I Vapor Recovery Systems	6
4-1	Phase II Performance Standards and Specifications Applicable to All Phase II Vapor Recovery Systems	12
5-1	Phase II Performance Standards and Specifications Applicable to Phase II Balance Vapor Recovery Systems	21
6-1	Phase II Performance Standards and Specifications Applicable to All Phase II Vacuum Assist Systems	23
7-1	Phase II Performance Standards and Specifications Applicable to All Phase II Assist Systems Utilizing a Central Vacuum Unit	24
8-1	Phase II Performance Standards and Specifications Applicable to All Phase II Assist Systems Utilizing a Destructive Processor	25
8-2	Phase II Performance Standards and Specifications Applicable to All Phase II Assist Systems Utilizing a Non-Destructive Processor	26
11-1	Estimated Timeline For the Certification Application Process	35
17-1	Estimated Timeline for the Renewal Process	54

LIST OF FIGURES

Figure	Title	Page
3A	Phase I Product Adaptor Cam and Groove Standard	11
3B	Phase I Vapor Recovery Adaptor Cam and Groove Standard	11

California Environmental Protection Agency
Air Resources Board

Vapor Recovery Certification Procedure

CP-201

Certification Procedure for Vapor Recovery Systems at Gasoline Dispensing Facilities

A set of definitions common to all Certification and Test Procedures are in:

D-200 Definitions for Vapor Recovery Procedures

~~For the purpose of this procedure, the term "ARB" or "CARB" refers to the California Air Resources Board, and the term "Executive Officer" refers to the ARB Executive Officer, or his or her authorized representative or designate.~~ All section references are to the Health and Safety Code unless otherwise stated.

1. GENERAL INFORMATION AND APPLICABILITY

This document describes the procedure for evaluating and certifying Phase I and Phase II vapor recovery systems, and components, used at Gasoline Dispensing Facilities (GDF) with underground storage tanks. An ARB Executive Order certifying the system shall be issued only after all of the applicable certification requirements have been successfully completed.

This Certification Procedure, CP-201, is adopted pursuant to Section 41954 of the California Health and Safety Code (CH&SC) and is applicable to vapor recovery systems installed at gasoline dispensing facilities for controlling gasoline vapors emitted during the fueling of storage tanks (Phase I) and the refueling of vehicle fuel tanks (Phase II). Vapor recovery systems are complete systems and shall include all associated dispensers, piping, nozzles, couplers, processing units, underground tanks and any other equipment or components necessary for the control of gasoline vapors during Phase I or Phase II refueling operations at GDF.

1.1 ~~Legislative and~~ Regulatory Requirements of Other State Agencies

As required pursuant to Sections 25290.1.2, 41955 and 41957 of the CH&SC, the Executive Officer shall coordinate this certification procedure with:

1.1.1 Department of Food and Agriculture,
Division of Measurement Standards (DMS)

1.1.2 Department of Forestry and Fire Protection,
Office of the State Fire Marshall (SFM)

1.1.3 Department of Industrial Relations,
Division of Occupational Safety and Health (DOSH)

1.1.4 State Water Resources Control Board (SWRCB)

Division of Water Quality

Prior to certification of the vapor recovery system by the Executive Officer, the applicant shall submit plans and specifications for the system to each of these agencies. Certification testing by these agencies may be conducted concurrently with ARB certification testing; however, the approval of the SFM, DMS, DOSH, and a determination by the SWRCB shall be a precondition to certification by ARB. The applicant is responsible for providing documentation of these approvals and determinations to ARB.

1.2 Requirement to Comply with All Other Applicable Codes and Regulations

Certification of a system by the Executive Officer does not exempt the system from compliance with other applicable federal, state, and local codes and regulations ~~such as state fire codes, weights and measures regulations, and safety codes and regulations~~.

2. PERFORMANCE STANDARDS AND SPECIFICATIONS

2.1 Performance Standards

A performance standard defines the minimum performance requirements for certification of any system, including associated components. An applicant may request certification to a performance standard that is more stringent than the minimum performance standard specified in CP-201. Ongoing compliance with all applicable performance standards, including any more stringent standards requested by the applicant, shall be demonstrated throughout certification testing.

2.2 Performance Specifications

A performance specification is an engineering requirement that relates to the proper operation of a specific system or component thereof. In addition to the performance specifications mandated in CP-201, an applicant may specify additional performance specifications for a system or component. An applicant may request certification to a performance specification that is more stringent than the minimum performance specification in CP-201. Ongoing compliance with all applicable performance specifications, including any more stringent specifications requested by the applicant, shall be demonstrated throughout certification testing.

2.3 Innovative System

The innovative system concept provides flexibility in the design of vapor recovery systems. A vapor recovery system that fails to comply with an identified performance standard or specification may qualify for consideration as an innovative system, provided that the system meets the primary emission factor/efficiency, complies with all other applicable requirements of certification, and the Executive Officer determines that the emission benefits of the innovation are greater than the consequences of failing to meet the identified standard or specification.

2.4 Additional or Amended Performance Standards or Performance Specifications

Whenever these Certification Procedures are amended to include additional or amended performance standards, any system that is certified as of the effective date of additional or amended standards shall remain certified until the operative date. Systems installed before the operative date of additional or amended standards may remain in use for the remainder of their useful life or for up to four years after the effective date of the new standard, whichever is shorter, provided the requirements of section 19 are met.

Whenever these Certification Procedures are amended to include additional or amended performance specifications, a system shall remain certified until the Executive Order expiration date. A system that was installed before the operative date of additional or amended performance specifications may remain in use subject to the requirements of section 17.

2.4.1 The effective and operative dates of adoption for all performance standards and specifications contained herein are specified in Table 2-1.

2.4.2 The operative dates of performance standards shall be the effective date of adoption of amended or additional performance standards, except as otherwise specified in Table 2-1. Certifications shall terminate on the operative date of amended or additional performance standards unless the Executive Officer determines that the system meets the amended or additional performance standards. Upon the operative date of amended or additional performance standards, only systems complying with the amended or additional performance standards may be installed.

2.4.3 The operative dates of performance specifications are listed in Table 2-1. As of the operative date of amended or additional performance specifications, only systems complying with the amended or additional performance-specifications may be installed.

2.4.4 When the Executive Officer determines that no Phase I or Phase II system has been certified or will not be commercially available by the operative dates specified in Table 2-1 of CP-201, the Executive Officer shall extend the operative date and may extend the effective date of amended or additional performance standards or specifications. If there is only one certified system to meet amended or additional standards, that system is considered to be commercially available if that system can be shipped within eight weeks of the receipt of an order by the equipment manufacturer.

2.4.5 The Executive Officer may determine that a system certified prior to the operative date meets the amended or additional performance standards or specifications. In determining whether a previously certified system conforms with any additional or amended performance standards, specifications or other requirements adopted subsequent to certification of the system, the Executive Officer may consider any appropriate information, including data obtained in the previous certification testing of the system in lieu of new testing.

2.4.6 Gasoline Dispensing Facilities in districts that ARB determines are in attainment with the state standard for Ozone are exempted from the Enhanced Vapor Recovery performance standards and specifications set forth in sections 3 through 9, inclusive, with the exception of the requirement for compatibility with vehicles that are equipped with Onboard Refueling Vapor Recovery (ORVR) systems as specified in subsection 4.4. New GDFs, and those undergoing major modifications, are not exempt. If exempt facilities become subject to additional standards due to a subsequent reclassification of their district from attainment to non-attainment, the facilities will have four years to comply.

2.4.7 The gasoline dispensing facility's gasoline throughput for calendar year 2003 shall be used for determining compliance with the Onboard Refueling Vapor Recovery (ORVR) requirements in Table 2-1.

Table 2-1
Effective and Operative Dates for Phase I and Phase II Vapor Recovery Performance Standards and Specifications

Performance Type	Requirement	Sec.	Effective Date	Operative Date
P/V Vent Valve	As specified in Table 3-1	3.5	Not applicable	July 1, 2007
All other Phase I Standards and Specifications	As specified in Table 3-1	3	April 1, 2001	July 1, 2001
ORVR Compatibility for GDF > 2.0 million gal/yr throughput[1]	As specified in section 2.4.7 and section 4.4	4.4	September 1, 2001	April 1, 2003
ORVR Compatibility for GDF ≥ 1.0 million gal/yr throughput[1]	As specified in section 2.4.7 and section 4.4	4.4	January 1, 2002	April 1, 2003
ORVR Compatibility for GDF < 1.0 million gal/yr throughput[1]	As specified in section 2.4.7 and section 4.4	4.4	March 1, 2002	April 1, 2003
Nozzle Criteria	Post-Refueling Drips ≤ 3 drop/refueling	4.7	April 1, 2005	April 1, 2005
Liquid Retention	≤ 350 ml/1,000 gals.	4.8	April 1, 2001	July 1, 2001
Liquid Retention Nozzle Spitting	≤ 100 ml/1,000 gals. ≤ 1.0 ml /nozzle/fueling	4.8	April 1, 2005	April 1, 2005
Spillage (including drips from spout)	≤ 0.24 pounds/1,000 gallons	4.3	April 1, 2005	April 1, 2005
For GDF > 1.8 mil. gal/yr.	ISD Requirements	9	September 1, 2005	September 1, 2005
For GDF > 600,000 gal/yr.[2]	ISD Requirements	9.1	September 1, 2006	September 1, 2006
Unihose	One Hose/Nozzle per Dispenser Side	4.10	Not applicable	April 1, 2003
All other Phase II Standards and Specifications	As specified in Tables 4-1 through 8-2.	4,5, 6,7,8	April 1, 2005	April 1, 2005
Low Permeation Hoses	Permeation rate ≤ 10.0 g/m^2/day as determined by UL 330 (7th ed.)	20.1	Date when the first applicable low permeation hose is certified	Same as the effective date

[1] Effective January 1, 2001, state law requires the certification of only those systems that are ORVR compatible (Health and Safety Code section 41954, as amended by Chapter 729, Statutes of 2000; Senate Bill 1300).
[2] GDF ≤ 600,000 gal/yr are exempted from ISD requirements.

3. PHASE I PERFORMANCE STANDARDS AND SPECIFICATIONS

Table 3-1 summarizes the Phase I Performance Standards and Specifications applicable to all Phase I vapor recovery systems.

Table 3-1
Phase I Performance Standards and Specifications
APPLICABLE TO ALL PHASE I VAPOR RECOVERY SYSTEMS

Performance Type	Requirement	Sec.	Std. Spec.	Test Procedure
Phase I Efficiency	≥ 98.0%	3.1	Std.	TP-201.1 TP-201.1A
Phase I Emission Factor	HC ≤ 0.15 pounds/1,000 gallons	3.1	Std.	TP-201.1A
Static Pressure Performance	In accordance with section 3.2	3.2	Std.	TP-201.3
Pressure Integrity of Drop-Tube with Overfill Prevention	≤ 0.17 CFH at 2.0 inches H_2O	3.3	Spec.	TP-201.1D
Phase I Product and Vapor Adaptor/Delivery Elbow Connections	Rotatable 360°, or equivalent	3.4	Spec.	TP-201.1B and Eng. Eval.
Phase I Product Adaptor Cam and Groove	As shown in Figure 3A	3.4	Spec.	Micrometer
Phase I Vapor Recovery Adaptor Cam and Groove	CID A-A-59326 (As shown in Figure 3B)	3.4	Spec.	Micrometer
Phase I Vapor Adaptor	Poppetted	3.4	Spec.	Testing and Eng. Eval.
Phase I Vapor Adaptor	No Indication of Leaks Using Liquid Leak Detection Solution (LDS) or Bagging	3.4	Spec.	LDS or Bagging
Phase I Product and Vapor Adaptors	≤ 108 pound-inch (9 pound-foot) Static Torque	3.4	Spec.	TP-201.1B

Table 3-1 (continued)
Phase I Performance Standards and Specifications
APPLICABLE TO ALL PHASE I VAPOR RECOVERY SYSTEMS

Performance Type	Requirement	Sec.	Std. Spec.	Test Procedure
UST Vent Pipe Pressure/Vacuum Valves	Pressure Settings 2.5 to 6.0 inches H_2O Positive Pressure 6.0 to 10.0 inches H_2O Negative Pressure Leakrate at +2.0 inches $H_2O \leq 0.17$ CFH Leakrate at -4.0 inches $H_2O \leq 0.63$ CFH	3.5	Spec.	TP-201.1E CERT
Spill Container Drain Valves	Leakrate $\leq$ 0.17 CFH at +2.0 inches H_2O	3.6	Spec.	TP-201.2B TP-201.1C TP-201.1D
Vapor Connectors and Fittings	No Indication of Leaks Using Liquid Leak Detection Solution (LDS) or Bagging	3.7	Spec.	LDS or Bagging
Compatibility with Fuel Blends	Materials shall be compatible with approved fuel blends	3.8	Spec.	Testing and Eng. Eval.

3.1 Phase I Efficiency/Emission Factor

3.1.1 The minimum volumetric efficiency of Phase I systems shall be 98.0%. This shall be determined in accordance with TP-201.1 (Volumetric Efficiency of Phase I Systems at Dispensing Facilities).

3.1.2 The hydrocarbon emission factor for systems with processors shall not exceed 0.15 pounds per 1,000 gallons dispensed. This shall be determined in accordance with TP-201.1A (Emission Factor for Phase I Systems at Dispensing Facilities).

3.2 Static Pressure Performance

The static pressure performance of Phase I vapor recovery systems not associated with Phase II systems shall be determined in accordance with TP-201.3 (Determination of 2 Inch WC Static Pressure Performance of Vapor Recovery Systems of Dispensing Facilities).

3.2.1 All Phase I systems shall be capable of meeting the performance standard in accordance with Equation 3-1.

3.2.2 The minimum allowable five-minute final pressure, with an initial pressure of two (2.00) inches H_2O, shall be calculated as follows:

[Equation 3-1]

$$P_f = 2e^{\frac{-500.887}{V}}$$

Where:

P_f = The minimum allowable five-minute final pressure, inches H_2O

V = The total ullage affected by the test, gallons

e = A dimensionless constant approximately equal to 2.718

2 = The initial starting pressure, inches H_2O

3.3 Phase I Drop-Tubes with Over-Fill Prevention Devices

Phase I drop-tube over-fill prevention devices shall have a leak rate not to exceed 0.17 cubic feet per hour (CFH) at a pressure of two inches water column (2.0" H_2O). The leak rate shall be determined in accordance with TP-201.1D (Leak Rate of Drop Tube Overfill Prevention Devices and Spill Container Drain Valves). Drop-tubes that do not have an over-fill prevention device shall not leak.

3.4 Phase I Vapor Recovery and Product Adaptors

3.4.1 The vapor recovery and product adaptors shall not leak. The vapor recovery and product adaptors, and the method of connection with the delivery elbow, shall be designed so as to prevent the over-tightening or loosening of fittings during normal delivery operations. This may be accomplished by installing a swivel connection on either the storage tank (rotatable adaptor) or delivery elbow side of the equipment, or by anchoring the product and vapor adaptors in such a way that they are not rotated during deliveries, provided the anchoring mechanism does not contribute undue stress to other tank connections. If a delivery elbow with a swivel connection is the preferred method, only cargo tank trucks with those elbows shall deliver to the facility. The adaptors at such a facility shall be incompatible with a delivery elbow that does not have a swivel.

3.4.2 Phase I product adaptors shall be manufactured in accordance with the cam and groove specification as shown in Figure 3A. Phase I vapor recovery adaptors shall be manufactured in accordance with the cam and groove specification as specified in the Commercial Item Description CID A-A-59326 (shown in Figure 3B). These specifications shall be applicable only to new adaptors and shall not be applied to in-use adaptors.

3.4.3 Phase I vapor recovery adaptors shall have a poppet. The poppet shall not leak when closed. The absence of vapor leaks may be verified by the use of commercial liquid leak detection solution, or by bagging, when the vapor containment space of the underground storage tank is subjected to a non-zero gauge pressure. (Note: leak detection solution will detect leaks only when positive gauge pressure exists.)

3.4.4 The static torque of product and vapor recovery adaptors shall not exceed 108

pound-inch (9 pound-foot) when measured in accordance with TP-201.1B.

3.5 Pressure/Vacuum Vent Valves

The Executive Officer shall certify only those vapor recovery systems equipped with a pressure/vacuum (P/V) valve(s) on the underground storage tank vent pipe(s). Verification of the P/V valve requirements set forth below shall be determined by TP-201.1E CERT, (Leak Rate and Cracking Pressure of Pressure/Vacuum Vent Valves).

3.5.1 The pressure specifications for P/V valves shall be:

Positive pressure setting of 2.5 to 6.0 inches H_2O.
Negative pressure setting of 6.0 to 10.0 inches H_2O.

3.5.2 The total leak rates for P/V valves, shall be less than or equal to:

0.17 CFH at +2.0 inches H_2O.
0.63 CFH at -4.0 inches H_2O.

3.5.3 The total leakrate of all P/V valves certified for use with any vapor recovery system shall not exceed 0.17 CFH at 2.0 inches H_2O or 0.63 CFH at -4.0 inches H_2O. Applicants may request to certify a system for use with multiple P/V valves by choosing P/V valves certified to more restrictive leak rate performance specifications. The applicant shall state in the certification application the leak rates to which P/V valves are to be certified. All individual valves shall be tested and certified to those stated leak rate specifications.

3.5.4 Phase I Certification test sites shall be configured with a minimum of three P/V valves (i.e., for representativeness), each P/V valve to be configured with an associated ball valve.

3.6 Spill Containers

3.6.1 Phase I spill container drain valves shall not exceed a leak rate of 0.17 CFH at 2.0 inches H_2O. Spill containers with cover-actuated drain valves shall be tested both with the lid installed and with the lid removed. The leak rate shall be determined in accordance with TP-201.2B (Pressure Integrity of Vapor Recovery Equipment). Phase I configurations installed so that liquid drained through the drain valve drains directly into the drop tube rather than the UST ullage shall be tested in accordance with TP-201.1C (Leak Rate of Drop Tube/Drain Valve Assembly) or TP-201.1D (Leak Rate of Drop Tube Overfill Prevention Device and Spill Container Drain Valves), whichever is applicable.

3.6.2 Drain valves shall not be allowed in spill containers used exclusively for Phase I vapor connections unless required by other applicable regulations.

3.6.3 Spill Containers shall be maintained in accordance with all applicable requirements.

3.7 Vapor Connections and Fittings

All vapor connections and fittings not specifically certified with an allowable leakrate shall not leak. The absence of vapor leaks may be verified by the use of commercial liquid leak detection solution, or by bagging individual components, when the vapor containment space of the underground storage tank is subjected to a non-zero gauge pressure. (Note: leak detection solution will detect leaks only when positive gauge pressure exists.) The absence of liquid leaks may be verified by visual inspection for seepage or drips.

3.8 Materials Compatibility with Fuel Blends

Vapor recovery systems and components shall be compatible with any and all fuel blends in common use in California, including seasonal changes, and approved for use as specified in title 13, CCR, section 2260 et seq. Applicants for certification may request limited certification for use with only specified fuel blends. Such fuel-specific certifications shall clearly specify the limits and restrictions of the certification.

Figure 3A
Phase I Product Adaptor Cam and Groove Specification

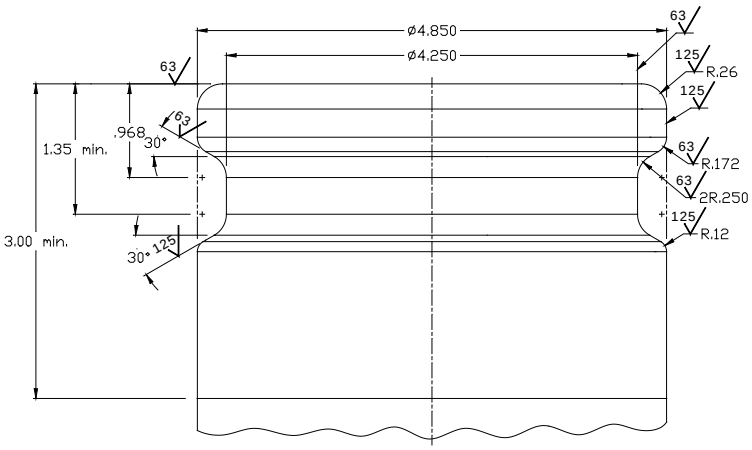

UNLESS OTHERWISE SPECIFIED
DIMENSIONS ARE IN INCHES
TOLERANCES ON DECIMALS
.XXX ± .005
.XX ± .01
ANGLES ± 0.5°

Figure 3B
Phase I Vapor Recovery Adaptor Cam and Groove Specification

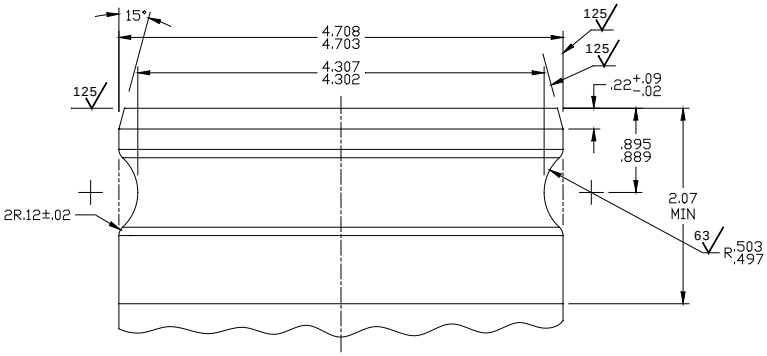

UNLESS OTHERWISE SPECIFIED
DIMENSIONS ARE IN INCHES
TOLERANCES ON DECIMALS
.XXX ± .005
.XX ± .02
ANGLES ± 0.5°

BASED ON
COMMERCIAL ITEM DESCRIPTION
CID A-A-59326
COUPLING HALF, MALE

4. PHASE II PERFORMANCE STANDARDS AND SPECIFICATIONS APPLICABLE TO ALL PHASE II VAPOR RECOVERY SYSTEMS

Table 4-1 summarizes the Phase II Performance Standards and Specifications applicable to all Phase II vapor recovery systems. Phase II vapor recovery systems shall be certified only in facilities equipped with a certified Phase I system.

Table 4-1
Phase II Performance Standards and Specifications
APPLICABLE TO ALL PHASE II VAPOR RECOVERY SYSTEMS

Performance Type	Requirement	Sec.	Std Spec.	Test Procedure
Phase II Emission Factor Includes: Refueling and Vent Emissions Pressure-Related Fugitives	Summer Fuel: 95% Efficiency and HC ≤ 0.38 pounds/1,000 gallons Winter Fuel: 95% Efficiency or HC ≤ 0.38 pounds/1,000 gallons	4.1	Std.	TP-201.2 TP-201.2A TP-201.2F
Static Pressure Performance	In accordance with Section 4.2	4.2	Std.	TP-201.3
Spillage Including Drips from Spout	≤ 0.24 pounds/1,000 gallons	4.3	Std.	TP-201.2C
ORVR Compatibility	Applicant shall develop a test procedure to demonstrate ORVR compatibility when requested by the Executive Officer.	4.4	Std.	Approved Test Procedure Developed by Mfg.
Liquid Retention Nozzle "Spitting"	≤ 100 ml/1,000 gallons ≤ 1.0 ml per nozzle per test	4.8	Std.	TP-201.2E
ISD	See Section 9	9	Std.	TP-201.2I
Low Permeation Hoses	Permeation Rate ≤ 10.0 $g/m^2/day$ as Determined by UL 330 (7th ed.)	20	Std.	UL 330 (7th ed.)
Phase II Compatibility with Phase I Systems	See Section 4.5	4.5	Spec.	Testing and Eng. Eval.
UST Pressure Criteria (30 day rolling average)	Daily Average Pressure ≤ +0.25 in. H_2O Daily High Pressure ≤ +1.50 in. H_2O	4.6	Spec.	TP-201.7
Nozzle Criteria Each Phase II Nozzle Shall:	Post-Refueling Drips ≤ 3 Drops/Refueling Comply with dimensions specified in section 4.7.3. Be capable of fueling any vehicle that can be fueled with a conventional nozzle	4.7	Spec.	TP-201.2D Engineering Evaluation

Table 4-1 (continued)
Phase II Performance Standards and Specifications
APPLICABLE TO ALL PHASE II VAPOR RECOVERY SYSTEMS

Performance Type	Requirement	Sec.	Std Spec.	Test Procedure
Nozzle/Dispenser Compatibility	Vapor Check Valve Closed When Hung Hold-open Latch Disengaged When Hung	4.9	Spec.	Testing and Eng. Eval.
Unihose MPD Configuration	One Hose/Nozzle per Dispenser Side	4.10	Spec.	Testing and Eng. Eval.
Phase II Vapor Riser	Minimum 1 Inch Nominal ID	4.11	Spec.	Testing and Eng. Eval.
Vapor Return Piping	No Liquid or Fixed Blockage Minimum 3 Inch Nominal ID after First Manifold Recommended Slope ¼ Inch Per Foot Minimum Slope 1/8 Inch Per Foot	4.11	Spec.	Testing and Eng. Eval.
Vapor Return Piping Rigidity	Rigid Piping, or Equivalent Bend Radius Exceeds 6 feet	4.11	Spec.	TP-201.2G
Vapor Return Pipe Runs	~~The~~ Maximum Allowable Lengths of Pipe Runs Shall Be Established During the Certification Process	4.11	Spec.	Testing and Eng. Eval.
Liquid Condensate Traps	Shall have Automatic Evacuation System	4.12	Spec.	Testing and Eng. Eval.
Connectors and Fittings	No Indication of Vapor Leaks with Liquid Leak Detection Solution (LDS) or Bagging	4.13	Spec.	LDS or Bagging

4.1 Phase II Emission Factor/Efficiency

4.1.1 The Hydrocarbon emission factor and/or efficiency for Phase II vapor recovery systems shall be determined as follows:

When testing conducted with gasoline meeting the requirements for summer fuel:
95% Efficiency and
Hydrocarbon emission factor not to exceed 0.38 pounds/1,000 gallons.

When testing conducted with gasoline meeting the requirements for winter fuel:
95% Efficiency or
Hydrocarbon emission factor not to exceed 0.38 pounds/1,000 gallons.

Compliance with the emission factor and the efficiency standards shall be demonstrated when calculated for a test population consisting of 100 non-ORVR vehicles, selected according to TP-201.2A.

4.1.2 The emission factor and/or efficiency shall be determined in accordance with TP-201.2 (Efficiency and Emission Factor for Phase II Systems) and shall include all refueling emissions, underground storage tank vent emissions and pressure-related fugitive emissions. Pressure-related fugitive emissions shall be determined in accordance with TP-201.2F (Pressure-Related Fugitive Emissions). Phase II systems that have underground storage tank (UST) pressures sufficient to cause potential fugitive emissions that exceed fifty percent (50%) of the maximum allowable emission factor shall not be certified.

4.2 Static Pressure Performance

The static pressure performance of Phase II systems, including the associated Phase I system, shall be determined in accordance with TP-201.3 (Determination of 2 Inch WC Static Pressure Performance of Vapor Recovery Systems of Dispensing Facilities).

4.2.1 All Phase II vapor recovery systems shall be capable of meeting the performance standard in accordance with Equation 4-1 or 4-2.

4.2.2 For Phase II Balance Systems, the minimum allowable five-minute final pressure, with an initial pressure of two (2.0) inches H_2O, shall be calculated as follows:

[Equation 4-1]

$$P_f = 2e^{\frac{-760.490}{V}} \quad \text{if N = 1-6}$$

$$P_f = 2e^{\frac{-792.196}{V}} \quad \text{if N = 7-12}$$

$$P_f = 2e^{\frac{-824.023}{V}} \quad \text{if N = 13-18}$$

$$P_f = 2e^{\frac{-855.974}{V}} \quad \text{if N = 19-24}$$

$$P_f = 2e^{\frac{-888.047}{V}} \quad \text{if N > 24}$$

Where:

N = The number of affected nozzles. For manifolded systems, N equals the total number of nozzles. For dedicated plumbing configurations, N equals the number of nozzles serviced by the tank being tested.

P_f = The minimum allowable five-minute final pressure, inches H_2O

V = The total ullage affected by the test, gallons

e = A dimensionless constant approximately equal to 2.718

2 = The initial starting pressure, inches H_2O

4.2.3 For Phase II Vacuum Assist Systems, the minimum allowable five-minute final pressure, with an initial pressure of two (2.0) inches H_2O, shall be calculated as follows:

[Equation 4-2]

$$P_f = 2e^{\frac{-500.887}{V}} \qquad \text{if N = 1-6}$$

$$P_f = 2e^{\frac{-531.614}{V}} \qquad \text{if N = 7-12}$$

$$P_f = 2e^{\frac{-562.455}{V}} \qquad \text{if N = 13-18}$$

$$P_f = 2e^{\frac{-593.412}{V}} \qquad \text{if N = 19-24}$$

$$P_f = 2e^{\frac{-624.483}{V}} \qquad \text{if N > 24}$$

Where:

N = The number of affected nozzles. For manifolded systems, N equals the total number of nozzles. For dedicated plumbing configurations, N equals the number of nozzles serviced by the tank being tested.

P_f = The minimum allowable five-minute final pressure, inches H_2O

V = The total ullage affected by the test, gallons

e = A dimensionless constant approximately equal to 2.718

2 = The initial starting pressure, inches H_2O

4.2.4 Under no circumstances shall Phase II components be partially or completely immersed in water to check for pressure integrity.

4.3 Spillage

The Executive Officer shall not certify vapor recovery systems that cause excessive spillage.

4.3.1 Spillage shall be determined in accordance with TP-201.2C (Spillage from Phase II Systems). The emission factor for spillage shall not exceed 0.24 pounds/1000 gallons dispensed, for each of the following three categories:

All refueling events;

Refueling operations terminated before activation of the primary shutoff; and

Refueling events terminated by activation of the primary shutoff.

4.3.2 The number of self-service refueling operations observed during certification testing of any system for spillage shall be not less than:

1,000 refueling operations [not including topoffs]; and

400 fill-ups [terminated by full tank shut-off, not including topoffs].

4.3.3 Increased spillage resulting from one top-off following the first activation of the automatic (primary) shutoff mechanism shall be subjected to challenge mode testing. Nozzles that result in excessive spillage following one top off shall not be certified.

4.4 Compatibility of Phase II Systems with Vehicles Equipped with ORVR Systems

The applicant, when requested by the Executive Officer, shall develop a test procedure by which ORVR compatibility can be demonstrated. This procedure is subject to an engineering evaluation by the Executive Officer.

4.5 Compatibility of Phase II Systems with Phase I Systems

4.5.1 Phase II vapor recovery systems shall be certified only in facilities equipped with a certified Phase I system. During a Phase II system certification, the associated Phase I system shall be subject to all of the standards and specifications in Section 3, and tested pursuant to Section 13.

Compatibility of the proposed Phase II system with the certified Phase I system installed at the certification test site shall be determined by use of all data collected as part of the monitoring described in Section 13 as well as an evaluation of the UST pressure profiles generated during the certification tests. Failure of any Phase I system tests conducted during the Phase II system certification shall require an explanation from the applicant and a determination by ARB in regard to the possible cause of the failure. Phase I system test failures shall not trigger termination of the Phase II system certification unless sufficient information demonstrates that the Phase II system caused the failure(s).

Repeated component test failures may lead to a determination of incompatibility during the 180-day operational test.

After successfully completing the certification, the Phase II system shall be evaluated based on engineering evaluation of pressure profiles to determine compatibility with other certified Phase I systems. Unless otherwise specified by the applicant, compatibility with all other certified Phase I systems shall be evaluated by ARB**.**

4.5.2 Applicants for certification may, as a performance specification, limit the type of equipment with which their system is compatible. Any such specification shall become a condition of certification.

4.6 Underground Storage Tank Pressure Criteria

Phase II systems that have underground storage tank (UST) pressures sufficient to cause potential fugitive emissions that exceed fifty percent (50%) of the maximum allowable emission factor shall not be certified. In addition, the following criteria shall apply to all Phase II systems.

4.6.1 The vapor recovery system pressure data shall be evaluated so that periods during which system pressure changes directly attributable to Phase I equipment or operations that do not comply with Sections 4.1.2 and/or 4.1.3 of CP-204 are not used to determine failure of the Phase II system to meet the system pressure criteria.

4.6.2 If the vapor recovery system pressure does not deviate from atmospheric

pressure except for those excursions attributable to Phase I operations, the integrity of the vapor recovery system shall be presumed to be inadequate.

4.6.3 The daily average pressure shall be computed as follows:

Zero and negative pressure shall be computed as zero pressure; and
Time at positive and zero pressures shall be included in the calculation.
(Example: 6 hours at +1.0 inches H_2O and 18 hours at -1.0inches H_2O yields an average daily pressure of 0.25 inches H_2O.)

4.6.4 The daily high pressure shall be computed as follows:

Zero and negative pressure shall be computed as zero pressure;
Time at positive and zero pressures shall be included in the calculation;
The average positive pressure for each hour shall be calculated; and
The highest hour is the daily high pressure for the day.

4.6.5 A rolling 30 day average of the daily average pressures and the daily high pressures for each day shall be calculated by averaging the most current daily value with the appropriate values for the previous 29 days. These 30-day rolling averages shall meet the following criteria:

The daily average pressure shall not exceed +0.25 inches H_2O.
The daily high pressure shall not exceed +1.5 inches H_2O.

4.6.6 Pressure readings shall be taken in accordance with TP-201.7 (Continuous Pressure Monitoring). Other methods of data collection and analysis may be used with prior approval of the Executive Officer.

4.7 Nozzle Criteria

4.7.1 Each vapor recovery nozzle shall be capable of refueling any vehicle that complies with the fillpipe specifications and can be fueled by a conventional nozzle.

4.7.2 Each vapor recovery nozzle shall be “dripless,” meaning that no more than three drops shall occur following each refueling operation. This shall be determined in accordance with TP-201.2D (Post-Fueling Drips from Nozzles).

4.7.3 Each vapor recovery nozzle shall comply with the following:
(a) The terminal end shall have a straight section of at least 2.5 inches (6.34 centimeters) in length;
(b) The outside diameter of the terminal end shall not exceed 0.840 inch (2.134 centimeters) for the length of the straight section; and
(c) The retaining spring or collar shall terminate at least 3.0 inches (7.6 centimeters) from the terminal end.

4.7.4 Additional nozzle criteria are contained in Sections 5 and 6.

4.7.5 A minimum of 10 nozzles must be tested for determination of post fueling drips.

4.8 Liquid Retention

4.8.1 Liquid retention in the nozzle and vapor path on the atmospheric pressure side of the vapor check valve shall not exceed 100 ml per 1,000 gallons. This shall be determined in accordance with TP-201.2E (Gasoline Liquid Retention in Nozzles and Hoses).

4.8.2 Nozzle "spitting" shall not exceed 1.0 ml per nozzle per test and shall be determined in accordance with TP-201.2E (Gasoline Liquid Retention in Nozzles and Hoses).

4.8.3 The number of self-service refueling operations observed during certification testing of any system for liquid retention and spitting shall be not less than:

10 refueling operations per nozzle (not including topoffs); and
4 fill-ups (terminated by automatic shut-off, not including topoffs).

4.8.4 A minimum of 10 nozzles must be tested for determination of liquid retention and spitting.

4.9 Nozzle/Dispenser Compatibility

The nozzle and dispenser shall be compatible as follows:

4.9.1 The nozzle and dispenser shall be designed such that the vapor check valve is in the closed position when the nozzle is properly hung on the dispenser.

4.9.2 The nozzle and dispenser shall be designed such that the nozzle cannot be hung on the dispenser with the nozzle valves in the open position.

4.10 Unihose Multi-Product Dispenser (MPD) Configuration

There shall be only one hose and nozzle for dispensing gasoline on each side of an unihose MPD. This shall not apply to facilities installed prior to April 1, 2003 unless the facility replaces more than 50 percent of the dispensers. Facility modifications that meet the definition of "major modification" for a Phase II system in D-200 trigger the unihose requirement as the facility is considered a "new installation". Exception: dispensers which must be replaced due to damage resulting from an accident or vandalism may be replaced with the previously installed type of dispenser.

4.11 Vapor Return Piping

The requirements of Sections 4.11.1 through 4.12.2 for the vapor return piping and, if applicable, condensate traps, from the dispenser riser to the underground storage tank, shall apply to any facility installed after April 1, 2003.

4.11.1 The vapor return piping from any fueling point to the underground storage tank shall be free of liquid or fixed blockage.

4.11.2 The Phase II riser shall have a minimum nominal internal diameter of one inch (1" ID). The connection between the Phase II riser and the dispenser shall be made with materials listed for use with gasoline, and shall have a minimum nominal 1" ID.

4.11.3 All new vapor return piping shall have a minimum nominal internal diameter of three inches (3" ID) from the point of the first manifold to the storage tank, including the float vent valve, if applicable. Facilities permitted by a local district prior to the adoption date of this procedure shall be required to meet the minimum three inch diameter standard only upon facility modifications requiring exposing at least 50 percent of the underground vapor return piping.

4.11.4 Wherever feasible, the recommended minimum slope of the vapor return piping, from the dispensers to the tank, shall be at least one-fourth (1/4) inch per foot of run. The minimum slope, in all cases, shall be at least one-eighth (1/8) inch per foot of run.

4.11.5 Vapor return piping shall be constructed of rigid piping (any piping material with a bend radius that exceeds six feet; the maximum allowable deflection distance is 9 5/8 inches, as determined by TP-201.2G), or shall be contained within rigid piping, or shall have an equivalent method, approved by the Executive Officer, to ensure that proper slope is achieved and maintained. (Note: this does not apply to flexible connectors at potential stress points, such as storage tanks, dispensers, and tank vents.) Rigidity shall be determined in accordance with TP-201.2G (Bend Radius Determination for Underground Storage Tank Vapor Return Piping).

4.11.6 The Executive Officer shall determine, by testing and/or engineering evaluation, the maximum allowable length of vapor return piping for the system.

4.12 Liquid Condensate Traps

Liquid condensate traps (also known as knockout pots and thief ports) are used to keep the vapor return piping clear of liquid when it is not possible to achieve the necessary slope from the dispenser to the underground storage tank.

4.12.1 Liquid condensate traps shall be used only when the minimum slope requirements of 1/8" per foot of run cannot be met due to the topography.

4.12.2 When condensate traps are installed, they shall be:

(a) certified by ARB;
(b) maintained vapor tight;
(c) accessible for inspection upon request;
(d) capable of automatic evacuation of liquid; and
(e) equipped with an alarm system in case of failure of the evacuation system.

4.13 Connections and Fittings

All connections, fittings, or components not specifically certified with an allowable

leakrate shall not leak. Vapor leaks may be determined by the use of commercial leak detection solution, or by bagging individual components, when the vapor containment space of the underground storage tank is subjected to a non-zero gauge pressure. (Note: leak detection solution will detect vapor leaks only when a positive gauge pressure exists). The absence of liquid leaks may be verified by visual inspection for seepage or drips.

5. PHASE II PERFORMANCE STANDARDS AND SPECIFICATIONS APPLICABLE TO BALANCE VAPOR RECOVERY SYSTEMS

Table 5-1 summarizes the performance standards and specifications specifically applicable to Phase II Balance vapor recovery systems. These systems are also subject to all of the standards and specifications in Sections 3 and 4, and the applicable requirements in Sections 7 and 8.

Table 5-1
Phase II Performance Standards and Specifications
APPLICABLE TO PHASE II BALANCE VAPOR RECOVERY SYSTEMS

Performance Type	Requirement	Sec.	Std Spec.	Test Procedure
Nozzle Criteria Each Balance Nozzle Shall:	Have an Insertion Interlock Be Equipped with a Vapor Valve	5.1	Spec.	Testing and Eng. Eval.
Insertion Interlock	Verification of No Liquid Flow Prior to Bellows Compression	5.1	Spec.	Testing and Eng. Eval.
Vapor Check Valve Leakrate	$\leq$ 0.07 CFH at 2.0 inches H_2O	5.1	Spec.	TP-201.2B
Bellows Insertion Force	Pounds (force) to Retaining Device Specified by Applicant and Verified During Certification Testing	5.1	Spec.	Testing and Eng. Eval.
Nozzle Pressure Drop	ΔP at 60 CFH of $N_2 \leq$ 0.08 inches H_2O	5.2	Std.	TP-201.2J
Hose Pressure Drop [Including Whip Hose]	ΔP at 60 CFH of $N_2 \leq$ 0.09 inches H_2O	5.2	Std.	TP-201.2J
Breakaway Pressure Drop	ΔP at 60 CFH of $N_2 \leq$ 0.04 inches H_2O	5.2	Std.	TP-201.2J
Dispenser Pressure Drop	ΔP at 60 CFH of $N_2 \leq$ 0.08 inches H_2O	5.2	Std.	TP-201.2J
Swivel Pressure Drop	ΔP at 60 CFH of $N_2 \leq$ 0.01 inches H_2O	5.2	Std.	TP-201.2J
Pressure Drop Phase II Riser to Tank [Including Vapor Return Line Impact Valve)	ΔP at 60 CFH of $N_2 \leq$ 0.05 inches H_2O	5.2	Std.	TP-201.4
Pressure Drop from Nozzle to UST	ΔP at 60 CFH of $N_2 \leq$ 0.35 inches H_2O ΔP at 80 CFH of $N_2 \leq$ 0.62 inches H_2O	5.2	Std.	TP-201.4
Liquid Removal Systems	Capable of Removing 5 ml/ gal. (average)	5.3	Std.	TP-201.6

5.1 Balance Nozzle Criteria

Nozzles for use with balance systems shall comply with all of the criteria in Section 4.7, as well as all the criteria below.

5.1.1 Each balance nozzle shall have an insertion interlock designed to prevent the dispensing of fuel unless there is an indication that the nozzle is engaged in the fillpipe (i.e., the nozzle bellows is compressed). The performance specifications for the insertion interlock mechanism shall be established during the certification process.

5.1.2 Each balance nozzle shall be equipped with a vapor valve. The leakrate for the vapor valve shall not exceed 0.07 CFH at a pressure of 2.0 inches H_2O.

5.1.3 The force necessary to compress the nozzle bellows to the retaining device, or a specified distance, shall be specified by the applicant for certification and verified during certification testing. The applicant shall include a protocol to test the nozzle bellows compression force in the certification application. This procedure is subject to engineering evaluation and approval by the Executive Officer.

5.2 Dynamic Pressure Drop Criteria for Balance Systems

5.2.1 The dynamic pressure drop for balance systems shall be established in accordance with TP-201.4 (Dynamic Back Pressure). The dynamic pressure drop standards from the tip of the nozzle spout to the underground storage tank, with the Phase I vapor poppet open, shall not exceed the following:

0.35 inches H_2O at a flowrate of 60 CFH of Nitrogen; and
0.62 inches H_2O at a flowrate of 80 CFH of Nitrogen.

5.2.2 The dynamic pressure drop for balance system components, measured in accordance with TP-201.2J (Pressure Drop Bench Testing of Vapor Recovery Components), shall not exceed the following:

Nozzle:	0.08 inches H_2O
Hose (Including Whip Hose):	0.09 inches H_2O
Breakaway:	0.04 inches H_2O
Dispenser:	0.08 inches H_2O
Swivel:	0.01 inches H_2O

The dynamic pressure drop for the balance system vapor return line, including the impact valve, shall not exceed the following:

Phase II Riser to UST:	0.05 inches H_2O

The applicant may request to be certified to a dynamic pressure lower than those specified above. This shall be specified in the application and verified during certification testing.

5.3 Liquid Removal Systems

Liquid removal systems shall be required in configurations that would otherwise be subject to liquid blockage.

The liquid removal rate shall be determined in accordance with TP-201.6 (Determination of Liquid Removal of Phase II Vapor Recovery Systems of Dispensing Facilities). The minimum removal rate, averaged over a minimum of 4 gallons, shall equal or exceed 5 ml per gallon. The minimum dispensing rate for this requirement shall be specified during the certification process.

6.0 PHASE II PERFORMANCE STANDARDS AND SPECIFICATIONS APPLICABLE TO ALL ASSIST VAPOR RECOVERY SYSTEMS

Table 6-1 summarizes the performance standards and specifications specifically applicable to Phase II Assist vapor recovery systems. These systems are also subject to all of the standards and specifications in Sections 3, 4 and the applicable requirements in Sections 7 and 8.

Table 6-1
Phase II Performance Standards and Specifications
APPLICABLE TO ALL PHASE II VACUUM ASSIST SYSTEMS

Performance Type	Requirement	Sec.	Std. Spec.	Test Procedure
Nozzle Criteria Each Assist Nozzle Shall:	Possess a Mini-Boot Have an Integral Vapor Valve	6.1	Spec.	Testing and Eng. Eval.
Nozzle Vapor Valve Leakrate	$\leq$ 0.038 CFH at +2.0 inches H_2O $\leq$ 0.10 CFH at –100 inches H_2O	6.1	Spec.	TP-201.2B
Nozzle Pressure Drop Specifications ΔP at Specified Vacuum Level	Specified by Applicant and Verified During the Certification Process	6.1	Spec.	TP-201.2J
Maximum Air to Liquid Ratio	1.00 (without processor) 1.30 (with processor)	6.2	Std.	TP-201.5
Air to Liquid Ratio Range	Specified by Applicant and Verified During the Certification Process	6.2	Spec.	TP-201.5

6.1 Nozzle Criteria

6.1.1 Nozzles for use with assist systems shall comply with all of the criteria in Section 4.7, as well as all the criteria below.

6.1.2 Each assist nozzle shall be equipped with a mini-boot that both allows for a lower A/L ratio and minimizes the quantity of liquid gasoline exiting the fillpipe during a spitback event.

6.1.3 Each assist nozzle shall be equipped with a vapor valve. The leakrate for the vapor valve shall not exceed the following:

0.038 CFH at a pressure of +2.0 inches H_2O; and
0.10 CFH at a vacuum of –100 inches H_2O.

6.1.4 The nozzle pressure drop shall be specified by the applicant and verified during the certification process.

6.2 Air to Liquid Ratio

The air to liquid (A/L) ratio shall be specified by the applicant and verified during the certification process in accordance with TP-201.5 (Air to Liquid Volume Ratio). The maximum A/L shall not exceed the following:

1.00 (without processor); and
1.30 (with processor).

7. PHASE II PERFORMANCE STANDARDS AND SPECIFICATIONS APPLICABLE TO ASSIST SYSTEMS UTILIZING A CENTRAL VACUUM UNIT

Table 7-1 summarizes the performance standards and specifications specifically applicable to Phase II Assist vapor recovery systems utilizing a Central Vacuum Unit. These systems are also subject to all of the standards and specifications in Sections 3, 4, 6 and, if applicable, Section 8.

Table 7-1
Phase II Performance Standards and Specifications
APPLICABLE TO ALL PHASE II ASSIST SYSTEMS
UTILIZING A CENTRAL VACUUM UNIT

Performance Type	Requirement	Sec.	Std. Spec.	Test Procedure
Specification of Minimum and Maximum Vacuum Levels	Specified by Applicant and Verified During the Certification Process	7.1	Spec.	Testing and Eng. Eval.
Number of Refueling Points Per Vacuum Device	Specified by Applicant and Verified During the Certification Process; and Challenge Mode Testing	7.2	Spec.	TP-201.5

7.1 Vacuum Levels Generated by the Collection Device

The normal operating range of the system shall be specified by the applicant and verified during the certification process, and the maximum and minimum vacuum levels shall be specified in the certification Executive Order. The applicant may propose challenge mode testing to extend the limits of the operating range.

7.2 Maximum Number of Refueling Points per Vacuum Device

The maximum number of refueling points that can be adequately associated with the vacuum device, including meeting the A/L limits, shall be specified by the applicant and verified during certification testing. The test shall be conducted with all of the refueling points except one using the same fuel grade, and the refueling point on which the effectiveness is being tested using a different fuel grade. An engineering evaluation followed by certification testing shall demonstrate the system's ability to meet the required A/L ratio and/or emission factor with a self-adjusting submersible turbine pump (STP).

8. PHASE II PERFORMANCE STANDARDS AND SPECIFICATIONS APPLICABLE TO SYSTEMS UTILIZING A DESTRUCTIVE OR NON-DESTRUCTIVE PROCESSOR

Tables 8-1 and 8-2 summarize the performance standards and specifications specifically applicable to Phase II vapor recovery systems utilizing a processor. These systems are also subject to all of the standards and specifications in Sections 3 and 4 and, the applicable provisions of Sections 5, 6, and 7.

Table 8-1
Phase II Performance Standards and Specifications
APPLICABLE TO ALL PHASE II SYSTEMS
UTILIZING A DESTRUCTIVE PROCESSOR

Performance Type	Requirement	Sec.	Std. Spec.	Test Procedure
Hazardous Air Pollutants (HAPS) from the processor	HAPS from the Processor Shall Not Exceed these Limits: 1,3-Butadiene: 1.2 lbs/year Formaldehyde: 36 lbs/year Acetaldehyde: 84 lbs/year	8.1, 8.2	Std.	TP-201.2H
Maximum HC Rate from Processor	≤ 5.7 lb/1,000 gallons (in breakdown mode)	8.3	Spec.	Testing and Eng. Eval.
Typical Load on Processor	Specified by Applicant and Verified during the Certification Process	8.4	Spec.	Testing and Eng. Eval.
Processor Operation Time	Specified by Applicant and Verified during the Certification Process	8.5	Spec.	Testing and Eng. Eval.

Table 8-2
Phase II Performance Standards and Specifications
APPLICABLE TO ALL PHASE II SYSTEMS
UTILIZING A NON-DESTRUCTIVE PROCESSOR

Performance Type	Requirement	Sec.	Std. Spec.	Test Procedure
Maximum HC Rate from Processor	≤ 5.7 lb/1,000 gallons (in breakdown mode)	8.3	Spec.	Testing and Eng. Eval.
Typical Load on Processor	Specified by Applicant and Verified during the Certification Process	8.4	Spec.	Testing and Eng. Eval.
Processor Operation Time	Specified by Applicant and Verified during the Certification Process	8.5	Spec.	Testing and Eng. Eval.

8.1 Processor Emission Factors

The emission factors shall be established in accordance with TP-201.2 (Efficiency and Emission Factor for Phase II Systems).

8.2 Hazardous Air Pollutants from Destructive Processors

Hazardous Air Pollutants (HAPS) from facilities using processors shall not exceed the following limits:

1,3-Butadiene: 1.2 pounds per year
Formaldehyde: 36 pounds per year
Acetaldehyde: 84 pounds per year

The emission factor shall be established in accordance with TP-201.2H (Determination of Hazardous Air Pollutants from Vapor Recovery Processors).

8.3 Maximum Hydrocarbon Feedrate from the Processor

The maximum Hydrocarbon feedrate from the processor, in breakdown mode, shall not exceed 5.7 pounds per 1,000 gallons.

8.4 Typical Load on the Processor

The typical load on the processor shall be identified by the applicant and verified during the certification process, and shall be included in the specifications in the certification Executive Order.

8.5 Processor Operation Time

The typical processor operation time shall be identified by the applicant and verified during the certification process, and shall be included in the specifications in the certification Executive Orders.

9. IN-STATION DIAGNOSTIC SYSTEMS

9.1 General Requirements

9.1.1 All GDF vapor recovery systems, unless specifically exempted, shall be equipped with an In-Station Diagnostic (ISD) system. Gasoline dispensing facilities that dispense less than or equal to 600,000 gallons per year are exempted from ISD requirements.

9.1.2 All GDF vapor recovery systems shall be equipped with an ISD system or device that has the capability to automatically prohibit the dispensing of fuel and has the capability to automatically inform the station operator in the event of either a malfunction, failure, or degradation of the system as defined below in Section 9.2.

9.1.3 All ISD systems shall be equipped with an RS232 port to remotely access ISD status information using standardized software.

9.1.4 The ISD manufacturer shall provide a means of testing and calibrating the sensors or devices installed on the GDF vapor recovery ISD system, including procedures for verifying that the ISD system operates properly. The means of testing and calibration shall be verified and subjected to challenge mode testing during the certification process.

9.1.5 Personnel trained and certified by the Executive Order certification holder, ISD manufacturers, or California Contractors State License Board shall test and calibrate the installed vapor recovery ISD system sensors or devices annually, at a minimum, with test equipment calibrated to National Institute of Standards and Technology-traceable standards. The minimum annual calibration frequency requirement may be waived and replaced with a frequency to be determined during certification testing if the ISD system manufacturer demonstrates equivalent self testing and automatic calibration features. All vapor recovery ISD system sensors or devices not performing in conformance with the manufacturer's specifications shall be promptly repaired or replaced.

9.1.6 Subject to the Executive Officer approval, other monitoring strategies may be used provided the manufacturer provides a description of the strategy and supporting data showing such strategy is equivalent to these requirements. Information such as monitoring, reliability, and timeliness shall be included.

9.1.7 The vapor recovery ISD system shall include self-testing including the ISD system and sensors that will be verified during the certification process.

9.1.8 The ISD system shall maintain an electronic archive of monthly reports for a

period of 12 months and an archive of daily reports for the last rolling 365 days.

9.1.9 The vapor recovery ISD system shall be operational a minimum of ninety five percent (95%) of the time, based on an annual basis or prorated thereof, and shall record the percentage of ISD up-time on a daily basis.

9.1.10 The Executive Officer shall, during certification testing, verify that the system is capable of detecting failures (of a size defined in each subsection, below) with at least a 95% probability while operating at no more than a 1% probability of false alarms. A false alarm occurs when the ISD system issues an alarm, but the vapor recovery system is functioning normally; i.e., the vapor recovery system is operating within the parameter limits required by CP-201 and specified in its Executive Orders.

9.1.11 Certification testing shall be performed in accordance with TP-201.2I (Test Procedure for In-Station Diagnostic Systems).

9.2 Monitoring Requirements

9.2.1 Air/Liquid (A/L) Ratio Vapor Collection Monitoring

(a) Requirement

The GDF vapor recovery ISD system shall monitor the Air to Liquid (A/L) ratio for vapor recovery systems which have A/L limits required by Section 6 and specified in their Executive Orders.

(b) Malfunction Criteria – Gross Failure

The GDF vapor recovery ISD system shall assess, on a daily basis, based on a minimum of 15 non-ORVR dispensing events, when the A/L ratio is at least 75% below the lower certified A/L ratio or at least 75% above the upper certified A/L ratio, shall activate a warning alarm, and shall record the event. This condition must be detected with a probability of 95%. If fewer than 15 non-ORVR dispensing events occur in a day, the ISD system may accumulate events over an additional day or days until a minimum of 15 non-ORVR events is reached. When two such consecutive failed assessments occur, the ISD system shall activate a failure alarm, record that event, and prohibit fuel dispensing from the affected fueling point(s). The ISD system shall have the capability of re-enabling dispensing, and shall record that event.

For example, for a vapor recovery system that is certified to operate with an A/L ratio between 0.9 and 1.0, a failed assessment shall occur if the daily A/L ratio is less than or equal to .22 (25% of .9) or if the daily ratio is greater than or equal to 1.75 (75% more than 1.0). When the ISD system assesses two consecutive failures, the ISD system shall activate an alarm.

(c) Malfunction Criteria - Degradation

The GDF vapor recovery ISD system shall assess, on a weekly basis, based on a minimum of 30 non-ORVR dispensing events, when the A/L ratio is at least 25% below the lower certified A/L ratio or at least 25% above the upper certified A/L ratio, shall activate a warning alarm, and shall record the event. This condition must be detected with a probability of 95%. If fewer than 30 non-ORVR dispensing events occur in a week, the ISD system may accumulate events over an additional day or days until a minimum of 30 non-ORVR events is reached. When two such consecutive failed assessments occur, the ISD system shall activate a failure alarm, record that event, and prohibit fuel dispensing from the affected fueling point(s). The ISD system shall have the capability of re-enabling dispensing, and shall record that event.

For example, for a vapor recovery system that is certified to operate with an A/L ratio between 0.9 and 1.0, a failed assessment shall occur if the weekly A/L ratio is less than or equal to .68 (75% of .9) or if the weekly ratio is greater than or equal to 1.25 (25% more than 1.0). When the ISD system assesses two consecutive failures, the ISD system shall activate an alarm.

9.2.2 Balance Performance Vapor Collection Monitoring

(a) Requirement

The GDF vapor recovery ISD system shall monitor vapor collection performance for balance vapor recovery systems. Vapor collection performance is defined as the amount of vapor collected relative to fuel dispensed to a non-ORVR vehicle. The baseline vapor collection performance is established during certification as described in TP-201.2I.

(b) Malfunction Criteria

The GDF vapor recovery ISD system shall assess, on a daily basis, based on a minimum of 15 non-ORVR dispensing events, when the vapor collection performance is less than 50%, shall activate a warning alarm, and shall record the event. The vapor collection performance can be monitored using flowmeters, pressure transducers, liquid sensors or any other means that indicates a 50% vapor collection decrease from the baseline. This condition must be detected with a probability of 95%. If fewer than 15 non-ORVR dispensing events occur in a day, the ISD system may accumulate events over an additional day or days until a minimum of 15 non-ORVR events is reached. When two such consecutive failed assessments occur, the ISD system shall activate a failure alarm, record that event, and prohibit fuel dispensing from the affected fueling point(s). The ISD system shall have the capability of re-enabling dispensing, and shall record that event.

9.2.3 Central Vacuum Unit Monitoring

(a) Requirement

The GDF vapor recovery ISD system shall verify that the central vacuum unit is operating within the specified range by measuring and recording the vacuum at a minimum of one reading every minute.

(b) Malfunction Criteria

The GDF vapor recovery ISD system shall assess, on a continuous rolling 20 minute basis, when a vacuum failure occurs as determined by the Executive Officer for each Phase II system, shall activate a failure alarm, record the event, and prohibit fuel dispensing from the affected fueling point(s). This condition must be detected with a probability of 95%. The ISD system shall have the capability of re-enabling dispensing and will disable the central vacuum unit monitoring for 24 hours, and shall record that event.

9.2.4 Ullage Pressure Vapor Containment Monitoring

(a) Requirement

The GDF vapor recovery ISD system shall measure and record the pressure of each UST ullage at a minimum of one reading every minute. One pressure monitoring device may be used for multiple USTs that have common vapor recovery piping.

(b) Malfunction Criteria – Gross Failure

The GDF vapor recovery ISD system shall assess, on a weekly basis, when the UST ullage pressure exceeds 1.5” wcg for at least 5% of the time, shall activate a warning alarm, and shall record the event. This condition must be detected with a probability of 95%. When two such consecutive failed assessments occur, the ISD system shall activate a failure alarm, record that event, and prohibit fuel dispensing from the affected fueling point(s). The ISD system shall have the capability of re-enabling dispensing, and shall record that event.

(c) Malfunction Criteria – Degradation

The GDF vapor recovery ISD system shall assess, on a monthly basis, when the UST ullage pressure exceeds 0.50" wcg for at least 25% of the time, shall activate a warning alarm, and shall record the event. This condition must be detected with a probability of 95%. When two such consecutive failed assessments occur, the ISD system shall activate a failure alarm, record that event, and prohibit fuel dispensing from the affected fueling point(s). The ISD system shall have the capability of re-enabling dispensing, and shall record that event.

(d) Malfunction Criteria – Pressure Integrity

The ISD system shall detect the potential for excessive rates of vapor leakage from the UST system. The ISD system shall assess, on a weekly basis, when the vapor recovery system leaks at a rate which is at least 2 times the rate allowed in section 4.2, shall activate a warning alarm, and shall record the event. This condition must be detected with a probability of 95%. When two such consecutive failed assessments occur, the ISD system shall activate a failure alarm, record that event, and prohibit fuel dispensing from the affected fueling point(s). The ISD system shall have the capability of re-enabling dispensing, and shall record that event.

9.2.5 Vapor Processing Monitoring

(a) Requirement

The GDF vapor recovery ISD system shall verify that the processor is functioning properly as specified in Section 8 and the Executive Order.

(b) Malfunction Criteria

The GDF vapor recovery ISD system shall assess, on a daily basis, when the vapor processor is malfunctioning as defined in the Executive Order, shall activate a warning alarm, and shall record the event. When two such consecutive failed assessments occur, the ISD system shall activate a failure alarm, record that event, and prohibit fuel dispensing from the affected fueling point(s). The ISD system shall have the capability of re-enabling dispensing, and shall record that event.

9.3 Records

9.3.1 The GDF vapor recovery ISD system shall generate a monthly report which includes the following:

(a) ISD operational time (as a percentage);
(b) Vapor Recovery system's operating requirements;
(c) Vapor recovery system pass time (as a percentage);
(d) ISD monitoring requirements;
(e) Warnings - this shall include the time and date;
(f) Failures - this shall include the time and;
(g) Event log describing re-enabling action taken - this shall include the time and date; and the time and date the ISD system clock was adjusted.

9.3.2 The GDF vapor recovery ISD system shall generate a monthly printout version on demand which includes the following:

(a) ISD operational time (as a percentage);
(b) Vapor recovery system pass time (as a percentage);

(c) Warnings - this shall include the time and date of the last ten warnings in the selected month;
(d) Failures - this shall include the time and date of the last ten failures in the selected month;
(e) Event Log - this shall include the time and date of the last ten logged exception events in the selected month including re-enabling actions taken and any ISD system clock adjustments.

9.3.3 The GDF vapor recovery ISD system shall generate a daily report which includes the following:

(a) Record of the percentage of ISD up-time on a daily basis;
(b) Highest ullage pressure;
(c) Lowest ullage pressure;
(d) 75th percentile ullage pressure;
(e) 95th percentile ullage pressure;
(f) Daily measured values of each fueling point; and
(g) Daily pass or fail assessment for each fueling point, and
(h) Processor Assessment.

9.3.4 Daily reports (as outlined in Section 9.3.3) and monthly printout versions (as outlined in Section 9.3.2) shall be available for printing, on demand, at the GDF site from the integral ISD printer. Daily reports shall be available for printing for the previous 30 days. Monthly printout versions shall be available for printing for the previous 12 months.

9.3.5 The ISD system shall store the electronic records of the monthly reports, monthly printout versions, and daily reports, such that the records are maintained despite loss of power to the ISD system.

9.4 Tampering Protection

The GDF vapor recovery ISD system sensors or devices shall be designed and installed in a manner designed to resist unauthorized tampering and to clearly show by visual inspection if tampering has occurred. The ISD system shall be designed and installed so that the station can not dispense fuel unless the ISD system is operating. The manufacturer shall include measures to prevent tampering of the GDF vapor recovery ISD system in the application. All tampering features are subject to Executive Officer approval.

9.5 Readiness/Function Code

The GDF vapor recovery ISD system shall store a code upon first completing a full diagnostic check of all monitored components and systems. This is applicable when the GDF vapor recovery ISD system is initially installed or when power is restored.

9.6 Stored Vapor Recovery System Conditions

Upon detection of a vapor recovery component or system failure the GDF vapor recovery system conditions shall be stored in computer memory. Subject to Executive

Officer approval, stored GDF vapor recovery system conditions shall include, but are not limited to, the time, date, which fueling point was shut down (if applicable), and the fault code.

9.7 Challenge Mode Testing

The Executive Officer shall conduct, or shall contract for and observe, challenge mode testing using test procedures to verify that the ISD system can detect various types of failures, record the incidence of such failures, and respond accordingly with alarms and/or by prohibiting fuel dispensing, as applicable. The ISD system shall have the capability of re-enabling dispensing, and shall record that event. Challenge mode testing shall include verification that interaction with ORVR-equipped vehicles will not cause the ISD to inappropriately identify a failure condition. ISD systems with false positive determinations in excess of one percent (1%) shall not be certified.

9.8 Electronic Access

The monthly and daily reports shall be made available on demand through an RS-232 serial port on a standardized data link connector. All ISD reports shall be electronically accessible with standardized software.

10. CERTIFICATION OF VAPOR RECOVERY SYSTEMS

The Executive Officer shall certify only those vapor recovery systems that, based on testing and engineering evaluation of that system's design, component qualities, and performance, are demonstrated to meet all applicable requirements of this certification procedure. Except as provided in Sections 18 and 19, this certification procedure should not be used to certify individual system components. Steps and conditions of the certification process, along with the Sections of this document that describe them, are outlined below.

(a)	Application Process	Section 11
(b)	Evaluation of the Application	Section 12
(c)	Vapor Recovery System Certification Testing	Section 13
(d)	Alternate Test and Inspection Procedures	Section 14
(e)	Documentation of Certification	Section 15
(f)	Duration and Conditions of Certification	Section 16
(g)	Certification Renewal	Section 17
(h)	Amendments to Executive Orders	Section 18

10.1 Each applicant submitting a system and/or component for certification shall be charged fees not to exceed the actual cost of evaluating and testing the system to determine whether it qualifies for certification. The applicant is required to demonstrate ability to pay the cost of testing prior to certification and performance testing. Applicants may request a payment plan for testing and certification costs. Requests for a payment plan should be submitted in writing to the Executive Officer and should include the payment frequency (monthly, quarterly, etc.) and amount of each payment to meet the obligation. Payment of fees shall be a condition of certification. Failure to fulfill the conditions of payment may result in revocation of the Executive Order.

11. APPLICATION PROCESS

All of the information specified in the following subsections shall be submitted to the Executive Officer for an application to be evaluated. An application for certification of a Phase I or Phase II vapor recovery system may be made to the Executive Officer by any applicant.

The applicant for certification shall identify, in the preliminary application, the standard(s) or specification(s) with which the system complies, and demonstrate that the proposed system meets the primary performance standard(s) or specification(s) required by sections 3 through 9 of this Procedure. For the preliminary application, the applicant shall have performed tests for all applicable performance specifications and standards. Engineering reports of successful test results for all these tests must be included in the preliminary application. In order to expedite the application process, the Executive Officer may determine that the application is acceptable based on the results of abbreviated operational and/or efficiency/emission factor testing and spillage. Test results shall be submitted for an operational test of at least 30 days, for a test of at least 50 vehicles demonstrating adequate collection, and for at least 200 observations of spillage (including at least 40 percent fill-ups), or equivalent verification that the system is capable of meeting the performance standards and specifications.

The system, as characterized by these reports, shall be subjected to an engineering evaluation. If the preliminary application is deemed acceptable, the applicant shall be notified and shall expeditiously install the system for certification testing. If the preliminary application is deemed unacceptable, applicants will be notified of any deficiencies within 60 days. The final application shall not be deemed complete until it contains the results of all necessary testing, the approvals of other agencies, the finalized operating and maintenance manuals, and all other requirements of certification.

The manufacturer shall demonstrate, to the satisfaction of the Executive Officer, that the GDF vapor recovery ISD system complies with the performance standards under actual field conditions and simulated failures. Such demonstrations shall include the submission of test results with the certification application.

The applicant shall provide a statement that all production parts will be built with the same manufacturing standards and achieve the same performance as the parts that will be evaluated during the certification. This statement shall include that all performance standards, manufacturing practices and product testing conducted by the applicant will guarantee that all parts will meet applicable standards and specifications.

Estimated timelines for evaluation of certification applications are provided below.

Table 11-1
Estimated Timeline for the Certification Application Process

Action	Time	Determination	ARB Response
Preliminary Application Filed	60 days	Acceptable	Preliminary Application Accepted Test Site Approval Granted
Preliminary Application Filed	60 days	Unacceptable	Notification of Deficiencies
Application Resubmitted	30 days	Acceptable	Preliminary Re-Application Accepted Test site Approval Granted
Application Resubmitted	30 days	Unacceptable	Initial Re-Application Returned with Notation of Deficiencies
Final Application Complete	120 days	Acceptable	Executive Officer Issues Certification Executive Order
Final Application Complete	120 days	Unacceptable	Executive Officer Denies Certification

The application shall be written and signed by an authorized representative of the applicant, and shall include all of the items listed below.

(a) Description of Vapor Recovery System (§11.1)
(b) Description of In-Station Diagnostics System (§11.2)
(c) Materials Compatibility with Fuels (§11.3)
(d) Evidence of Compatibility of the System (§11.3)
(e) Evidence of Reliability of the System (§11.4)
(f) Installation and Maintenance Requirements of the System (§11.5)
(g) Evidence of Financial Responsibility of the Applicant (§11.6)
(h) A Copy of the Warranty (§11.7)
(i) Request for and Information about Proposed Test Station (§11.8)
(j) Notification of System Certification Holder, if applicable (§11.9)
(k) Equipment Defect Identification and Test Protocols (§11.10)
(l) Challenge Modes and Test Protocols (§11.11)
(m) Other Information (§11.12)

In addition, an electronic version (DVD/CD/Thumb Drive, etc.) of the application shall also be submitted to ARB that contains all aspects of the written and signed version in Portable Display Format (PDF) or other format acceptable to the Executive Officer.

11.1 Description of Vapor Recovery System

The application shall include a complete description of the system concept, design and operation, including, but not limited to, the following items.

11.1.1 Identification of critical system operating parameters. An engineering evaluation of the system will be performed by ARB to evaluate any proposed specifications and to establish additional performance specifications if required.

11.1.2 Complete engineering ~~Engineering~~ drawings of system, components, and underground piping and tank configurations for which certification is requested. These drawings shall include the full production component (e.g. nozzle, hose, breakaway) as well as each individual sub-assemblies and parts used in the construction of the component. All drawings shall show part number(s), drawing revision level, revision level detail, parts list (if applicable), material(s), dimensions and tolerances.

11.1.3 Engineering parameters for dispenser vapor system control boards and/or all vapor piping, pumps, nozzles, hanging hardware, vapor processor, etc.

11.1.4 Listing of vapor recovery system components (e.g. nozzle, drop tube, vapor processor, etc.) and evidence that the manufacturers of any components intended for use with the system and not manufactured by the applicant have been notified of the applicant's intent to obtain certification.

11.1.5 Applicable performance standards and specifications of components, specifically identifying those which exceed the minimum acceptable specifications and for which certification of superior performance is requested, and test results demonstrating compliance with these specifications.

11.1.6 Results of tests demonstrating that the system and components meet all the applicable performance standards. These tests shall be conducted by, or at the expense of, the applicant.

11.1.7 If the application is for an innovative system, the applicant shall identify the performance standard(s) or specification(s) with which the system does not comply. The applicant shall supply any necessary alternative test procedures, and the results of tests demonstrating that the system complies with the emission factor/efficiency. The applicant shall also supply test results demonstrating that the emission benefits of the innovation are greater than the consequences of failing to meet the identified performance standard or specification.

11.1.8 Any additional specifications of the system including, but not limited to, underground pipe sizes, lengths, fittings, volumes, material(s), etc.

11.1.9 Estimated retail price of the system.

11.1.10 For previously tested systems, identification of any and all new components and physical and operational characteristics, together with new test results obtained by the applicant.

11.2 Description of In-Station Diagnostics (ISD)

The applicant shall include the following documentation with the certification application.

11.2.1 A written description of the functional operation of the GDF vapor recovery ISD system.

11.2.2 A table providing the following information shall be included for each monitored component or system, as applicable:

(a) Corresponding fault code;
(b) Monitoring method or procedure for malfunction detection;
(c) Primary malfunction detection parameter and its type of output signal;
(d) Fault criteria limits used to evaluate output signal of primary parameter;
(e) Other monitored secondary parameters and conditions (in engineering units) necessary for malfunction detection;
(f) Monitoring time length and frequency of checks;
(g) Criteria for storing fault code;
(h) Criteria for notifying station operator; and
(i) Criteria used for determining out of range values and input component rationality checks.

11.2.3 A logic flowchart describing the general method of detecting malfunctions for each monitored emission-related component or system.

11.2.4 A written detailed description of the recommended inspection and Maintenance procedures, including inspection intervals that will be provided to the gasoline dispensing facility operator.

11.2.5 A written detailed description of the training plan to train and certify system testers, repairers, installers, and rebuilders.

11.2.6 A written description of the manufacturer's recommended quality control checks.

11.2.7 A written description of calibration and diagnostic checks.

11.2.8 A list of system components that are monitored by the ISD system and test procedures for challenge mode testing. The Executive Officer may modify the list or test procedures based on an engineering evaluation. Additional procedures may be developed as necessary to verify that the system's self-check and self-test features perform accurately.

11.3 Compatibility

11.3.1 The applicant shall submit evidence of system compatibility, including the following:

11.3.2 A procedure developed by the applicant for demonstrating compatibility between the Phase II vapor recovery system and ORVR-equipped vehicles shall be submitted, along with the test results demonstrating compatibility. The procedure shall comply with the provisions in Section 4.4.

11.3.3 Evidence demonstrating the compatibility of the Phase II system with any type of Phase I system with which the applicant wishes the Phase II system to be certified, as specified in Section 4.5. Continuous recordings of pressure readings in the underground storage tank, as well as challenge mode tests, may be used for this demonstration.

11.3.4 Evidence that the system can fuel any vehicle meeting state and federal fillpipe specifications and capable of being fueled by a non-vapor-recovery nozzle.

11.3.5 The applicant shall provide information regarding the materials specifications of all components, including evidence of compatibility with all fuels in common use in California and approved as specified in Section 3.8. If the applicant is requesting a certification for use only with specified fuel formulations, the applicant shall clearly identify, in the application, the included and excluded fuel formulations for which certification is requested.

11.4 Reliability of the System

In order to ensure ongoing compliance, adequately protect public health, and protect the end-user, the reliability of the system shall be addressed in the application, including the following:

11.4.1 The expected life of system and components.

11.4.2 Description of tests conducted to ascertain compliance with performance standards and specifications for the expected life of the system or component, any procedures or mechanisms designed to correct problems, and test results.

11.4.3 Identification of and emission impact of possible failures of system, including component failures

11.4.4 Procedure and criteria for factory testing (integrity, pressure drop, etc.)

11.4.5 Detailed description of the Quality Assurance/Quality Control (QA/QC) protocols used by the manufacturer to ensure the production version of the vapor recovery system or component meets and maintains certification standards.

11.5 Installation, Operation, and Maintenance of the System

The installation, operation, and maintenance plan shall be submitted, and shall include at least the following items:

11.5.1 Installation, operation, and maintenance manuals of the system, including the ISD.

11.5.2 A plan for training installers in the proper installation of the system.

11.5.3 A replacement parts program.

11.5.4 The estimated installation costs and yearly maintenance costs.

11.6 Evidence of Financial Responsibility

The applicant shall submit evidence of financial responsibility to ensure adequate protection to the end-user of the product as specified in Section 16 and to demonstrate the ability to pay for certification tests.

11.7 Warranty

The applicant shall submit a copy of the warranty for the system, warranties for each component, and samples of component tags or equivalent method of meeting warranty requirements as specified in Section 16.

11.8 Test Station

11.8.1 The vapor recovery system shall be installed and tested in an operating gasoline dispensing facility for the purpose of certification testing.

11.8.2 The applicant shall make arrangements for the vapor recovery system to be installed in an operating gasoline dispensing facility meeting the requirements of Section 13.1.

11.8.3 The request for designation as a test site shall include the following information:

(a) Location of the facility;
(b) Verification of throughput for at least six months; and
(c) Hours of operation.

11.8.4 The applicant shall submit final construction diagrams of the proposed test station. These drawings shall clearly identify the type of vapor recovery piping and connections, pipe slope, and type of storage tanks (i.e., single or double wall, steel, fiberglass, etc.). The Executive Officer may require Professional Engineer or Architect Approved As-Built drawings of the test site. If such drawings are not obtainable, the applicant may request the Executive Officer to accept alternatives sources of this information, such as detailed schematics of the vapor piping configuration and/or photographs clearly identifying underground components.

11.9 Notification of Certified System Component Manufacturers

If the applicant is not the manufacturer of all system components, the applicant shall include evidence that the applicant has notified all component manufacturer~~(s)~~ of the applicant's intended use of the component manufacturers' equipment in the vapor recovery system for which the application is being made.

11.10 Equipment Defect Identification and Test Protocols

The application shall identify where failure of system components may result in an equipment defect as defined by section 94006, Title 17, CCR (Vapor recovery equipment defect, VRED). Test protocols shall be developed by the applicant, and submitted with the certification application, along with test results, observations, or other analyses conducted by the applicant, to determine if the component or system failure meets the criteria of a VRED. These protocols are subject to engineering evaluation and approval by the Executive Officer.

11.11 Challenge Modes and Test Protocols

The application shall identify potential challenge modes, as described in Section 13.4. Test protocols shall be developed and submitted by the applicant, and submitted with the certification application, along with test results, observations, or other analyses conducted by the applicant, to determine if the system meets the applicable standards and specifications when tested in challenge mode. These protocols are subject to engineering evaluation and approval by the Executive Officer.

11.12 Other Information

11.12.1 The applicant shall provide any other information that the Executive Officer reasonably deems necessary.

11.12.2 For a balance type system, the applicant shall provide a specification for the bellows insertion force as specified in Section 5.1. The applicant will include a protocol to test the nozzle bellows compression force in the certification application. This procedure is subject to engineering evaluation and approval by the Executive Officer.

11.12.3 For an assist system, the applicant shall provide specifications for the nozzle pressure drop as specified in Section 6.1 and for the air to liquid ratio as specified in Section 6.2.

11.12.4 For a central vacuum assist system, the applicant shall provide specifications for the minimum and maximum vacuum levels and for the number of refueling points per vacuum device as specified in Sections 7.1 and 7.2, respectively.

11.12.5 For a system with a processor, the applicant shall provide the typical load on the processor and the processor operation time as specified in Sections 8.4 and 8.5 respectively.

12. EVALUATION OF THE APPLICATION

The application for certification of all systems and components shall be subjected to an evaluation by the Executive Officer

The evaluation of the application shall include, but is not limited to, subsections 12.1 through 12.7.

12.1 Performance Standards and Specifications

The system and component performance standards and specifications identified by the applicant shall be reviewed to ensure that they include and conform to the applicable standards and specifications in Sections 3 through 9 of this Procedure.

12.2 Bench and Operational Testing Results

The procedures for, and results of, bench testing and operational testing contained in the application shall be reviewed. The review shall determine if the procedures adhere to required methodology and ensure that the results meet or exceed the standards and specifications in Sections 3 through 9 of this Procedure. The evaluation shall include a determination of necessary verification testing.

12.3 Evaluation of System Concept

The system concept shall be evaluated to ensure that it is consistent with the generally accepted principles of physics, chemistry, and engineering.

12.4 Materials Specifications and Compatibility with Fuel Formulations

The component materials specifications shall be reviewed to ensure chemical compatibility with gasoline and/or any oxygenates that may be present in gasoline on an ongoing or on a seasonal basis, as specified in Section 3.8. This review shall include consideration of the variations in gasoline formulations for octane differences and summer fuel and winter fuel.

12.5 Installation, Operation and Maintenance Manuals

The installation, operation and maintenance manuals for the system and components shall be reviewed for completeness (see Section 16.6). Routine maintenance procedures shall be reviewed to ensure adequacy and determine that the procedures are not unreasonable (see Section 16.6).

12.6 Equipment Defect Identification

The engineering evaluation shall identify where failure of system components may result in a vapor recovery equipment defect (VRED) as defined by section 94006, title 17, CCR. Test protocols may be developed by the applicant to determine if the component or system failure meets the criteria of a VRED. These test protocols, upon approval of the Executive Officer, are applied during certification testing as provided in section 13.4.1. The ARB Executive Officer may, for good cause, require modification of, and/or testing in addition to, VRED testing proposed by the applicant.

All VRED mode test procedures, and the results of tests conducted by the applicant, shall be reviewed. Additionally, all VRED mode testing conducted during the certification process to verify the test results or further evaluate the systems shall be similarly reviewed.

12.7 Challenge Mode Determination

The applicant may propose, and the Executive Officer shall determine, whether additional testing is needed to ensure the system will meet the applicable standards and specifications under various typical operating parameters. Proposed test protocols may be developed by the applicant to determine if the component or system meets the applicable standards and specifications under such conditions. These test protocols, after engineering evaluation and upon approval of the Executive Officer, are applied during certification testing as provided in section 13.4.2. The ARB Executive Officer may, for good cause, require modification of, and/or testing in addition to, challenge mode testing proposed by the applicant.

13. VAPOR RECOVERY SYSTEM CERTIFICATION TESTING

The Executive Officer shall conduct, or shall contract for and observe, testing of vapor recovery systems conducted for the purpose of certification. Except as otherwise specified in Section 14 of this procedure, vapor recovery systems shall be subjected to evaluation and testing pursuant to the applicable performance standards, performance specifications, and test procedures specified in Sections 3 through 9 of this procedure.

Certification testing of vapor recovery systems shall be conducted only after the preliminary application for certification has been found to be acceptable. Some tests may be conducted more than once to characterize the performance of systems and/or system components over time. Except as otherwise provided in Sections 18 and 19 of this procedure, only complete systems shall be certified.

Failure of any component during testing of a Phase I or Phase II system shall be cause for termination of the certification test, except as noted below. Any Phase I or Phase II system and/or component test failures must be investigated by the applicant and an explanation provided to the Executive Officer within one week of the test failure discovery. The Executive Officer may extend this one week time period for good cause. The Executive Officer may consider information and circumstances presented by the applicant, including previous certification testing, to demonstrate that the failure was attributable to something other than the design of the component and/or system, and may allow further testing without modification.

As specified in Section 4, Phase II vapor recovery systems shall be certified only in facilities equipped with a certified Phase I system. During Phase II system certifications, the associated Phase I system shall be subject to all of the standards and specifications in Section 3. Monitoring of Phase I system performance shall be conducted for the purpose of demonstrating compatibility, as required by Section 4.5, as well as to insure that the Phase I system is functioning properly during the Phase II certification test. Any Phase I components identified as not performing correctly shall be replaced and the Phase II system certification continued. However, Phase II system test data collected during any period associated with a Phase I system test failure shall be evaluated for validity.

During Phase II system certifications, failures of any Phase I components that are determined to be unrelated to the performance of the Phase II system shall not be cause for termination of the Phase II system certification. During Phase II certification tests, if any Phase I component is identified as having performance deficiencies, then a more thorough

investigation of the Phase I component/system performance will be initiated by the Executive Officer.

During Phase II system certifications, any Phase I system and/or component performance deficiencies that are determined to be related to the performance of the Phase II system shall be cause for termination of the Phase II system certification, as provided by Section 4.5.

Any applicant or representative of an applicant found to have performed unauthorized maintenance, or to have attempted to conceal or falsify information, including test results and/or equipment failures, may be subject to civil and criminal penalties and testing of the system or component shall be terminated.

13.1 Test Site for Field Testing of Vapor Recovery Systems

The applicant shall make arrangements for the vapor recovery system to be installed in one or more operating GDFs for certification testing, and the applicant shall request, in writing, approval of the GDF as a test site from the Executive Officer. Upon determining that the GDF meets all of the following criteria, the Executive Officer shall, in writing, designate the selected location as a test site, and exempt it from any state or local district prohibition against the installation of uncertified equipment. This shall not exempt it from the prohibition against the offer for sale, or sale, of uncertified equipment. The vapor recovery system shall be installed throughout the entire facility (note this requirement applies to the primary certification test site). The Executive Officer may require that the system be installed in more than one facility for the purpose of testing.

13.1.1 The test station shall have a minimum gasoline throughput of 150,000 gallons/month, as demonstrated over a consecutive six-month period. The minimum allowable monthly throughput for each of the six months is 150,000 gallons/month. The throughput data submitted in the certification application, as specified in Section 11, shall be the most current data available. The test site throughput shall also be shown to comply with this criteria for the six months prior to the start of operational tests.

If the facility is equipped with one hose and nozzle for each gasoline grade, rather than a uni-hose configuration, the minimum throughput requirement shall apply to the gasoline grade with the highest throughput.

13.1.2 The station shall be located within 100 miles of the ARB Sacramento offices. When a suitable location for testing cannot be located within 100 miles of the ARB offices, the Executive Officer may, for good cause, grant approval of a test station elsewhere, provided that all the necessary testing can be conducted at that location. The applicant shall be responsible for any additional costs, such as travel, associated with that location.

13.1.3 Continuous access to the test site by ARB staff, without prior notification, shall be provided. Every effort will be made to minimize inconvenience to the owner/operator of the facility. If testing deemed necessary cannot reasonably be conducted, the facility shall be deemed unacceptable and the test shall be terminated.

13.1.4 If test status is terminated for any reason, uncertified equipment shall be removed within sixty (60) days, unless the Executive Officer extends the time in writing. The local district with jurisdiction over the facility may impose a shorter time.

13.1.5 All test data collected by the applicant at the test site shall be made available to the Executive Officer within fifteen (15) working days. Continuous data, such as pressure monitoring data, shall be submitted in bimonthly increments within 15 days of the last day of the increment. Failure to provide this information may result in extension or termination of the test. The Executive Officer may specify the format in which the data is to be submitted.

13.1.6 Test site designation may be requested by the applicant, or by another person, for facilities other than the certification test site(s), for the purpose of research and development, or independent evaluation of a system prior to its certification. Approval of such a test site shall be at the discretion of the Executive Officer. The research and development test site shall be subject to all of the above conditions with the exception of 13.1.1 and 13.1.2.

13.1.7 For testing conducted pursuant to Section 18, Phase I certification test sites configured with fewer than three P/V valves may be approved by the Executive Officer.

13.1.8 Phase II certification test sites will be configured with one to three P/V vent valves, each with an associated ball valve.

13.2 Bench Testing of Components

Components identified by the engineering evaluation as requiring bench testing to verify performance standards and specifications shall be submitted to the Executive Officer prior to commencement of operational testing. This testing may be repeated during and/or after the operational testing.

13.3 Operational Test of at Least 180 Days

13.3.1 All vapor recovery systems shall be subjected to an operational test. The duration of the test shall be for a minimum of 180 days, and for a minimum of 900,000 gallons of gasoline throughput, except as otherwise provided in Sections 18 and 19.

13.3.2 No maintenance shall be performed other than that which is specified in the installation, operation and maintenance manual. Such maintenance as is routine and necessary shall be performed only after notification of the Executive Officer. Occurrences beyond the reasonable control of the applicant, such as vandalism or accidental damage by customers (e.g., drive-offs), shall not be considered cause for failure of the systems.

13.3.3 Except where it would cause a safety problem, maintenance shall not be performed until approval by the Executive Officer has been obtained. In those situations that require immediate action to avoid potential safety problems,

maintenance may be performed immediately and the Executive Officer shall be notified as soon as practicable thereafter and provided with a narrative of the reasons giving rise to the maintenance and the nature of the maintenance performed.

13.3.4 For the purpose of certification, the pressure in the underground storage tank (UST) shall be monitored and recorded continuously throughout the operational test in accordance with TP-201.7 (Continuous Pressure Monitoring). Testing in accordance with the procedures specified in TP-201.3, to verify the pressure integrity of the test station, shall be conducted throughout the operational test period, at intervals not to exceed thirty days. Only data collected during periods of pressure integrity shall be deemed valid. No less than three thirty-consecutive-day periods of valid UST pressure data shall be used to verify that the system meets the standard, as specified in Section 4. All valid pressure data shall be used to make this determination. If the system fails to meet the standard, the data may be examined, and the Executive Officer may exclude pressure excursions directly attributable to noncompliant cargo tank deliveries.

13.3.5 Tests of the performance of the system and/or components shall be conducted periodically throughout the operational test period. If the results of such tests, when extrapolated through the end of the warranty period, show a change that results in the degradation of a performance standard or specification, the Executive Officer may extend or terminate the operational test.

13.4 Equipment Defect and Challenge Mode Testing

13.4.1 Equipment Defect Testing

Testing to determine vapor recovery equipment defects as defined by section 94006 of title 17, California Code of Regulations, shall be conducted as part of certification testing. Vapor recovery equipment defect testing may be allowed during the operational test only when the Executive Officer has determined that conducting the testing does not affect the normal operation of the system.

13.4.2 Challenge Mode Testing

Testing to verify that the system meets applicable standards under various GDF operating conditions may be conducted as part of certification testing. Challenge mode tests may be allowed during the operational test only when the Executive Officer has determined that conducting the testing does not affect the normal operation of the system.

13.5 Efficiency and/or Emission Factor Test

Testing to determine the efficiency and/or emission factor of the vapor recovery system shall be conducted in accordance with the applicable test procedures specified in Section 3 or Section 4 of this procedure. Additional testing may be required if the Executive Officer deems it necessary. The additional testing may include, but is not limited to the determination of the Reid Vapor Pressure of the fuel, the volume and/or mass in the vapor return path, fuel and/or tank temperature, and the uncontrolled emission factor.

13.6 Vehicle Matrix

A representative matrix of 100 vehicles shall be used when testing to determine the Phase II efficiency for the performance standard. The composition of the representative vehicle matrix shall be determined for each calendar year by the Executive Officer in accordance with TP-201.2A (Determination of Vehicle Matrix for Phase II Systems).

13.6.1 Vehicles will be tested as they enter the dispensing facility ("first in" basis) until a specific matrix block of the distribution is filled.

13.3.2 The Executive Officer may exclude any vehicle that fails to comply with the vehicle fillpipe specifications (“Specifications for Fill Pipes and Openings of Motor Vehicle Fuel Tanks” incorporated by reference in title 13, CCR, section 2235).

13.6.3 The Executive Officer may exclude a vehicle prior to its dispensing episode only if such exclusion and its reason is documented; e.g. unusual facility conditions beyond the applicant's control or unusual modifications to the vehicle. All data required by the test procedure shall be taken for such vehicles for subsequent review and possible reversal of the exclusion decision made during the test. The only other reasons for excluding a vehicle from the test fleet are incomplete data or the factors in TP-201.2.

13.6.4 Additional vehicles may be chosen for testing at the test site by the Executive Officer. The vehicles shall be chosen, according to the Executive Officer's judgment, so that any of the first 100 vehicles, which may later be found to have invalid data associated with them, shall have replacements from among the additional vehicles on a "first in" basis.

13.6.5 A matrix of fewer than 100 vehicles may be made by deleting up to a maximum of three vehicles by reducing the representation in any cell or combination of cells of the vehicle matrix as specified by TP-201.2A, subject to the following requirements for each candidate reduced cell.

(a) No cell shall be reduced by more than one vehicle
(b) At least one dispensing episode has already been tested in each cell.
(c) None of the other dispensing episodes in the cell have yielded field data which, in the Executive Officer's judgment, would cause a failure to meet the standards specified in section 4.1.
(d) All tested dispensing episodes in all cells have yielded field data that, in the Executive Officer's judgment, would yield valid test results after subsequent review and evaluation.

14. ALTERNATE TEST PROCEDURES AND INSPECTION PROCEDURES

Test procedures other than those specified in this certification procedure shall be used only if prior written approval is obtained from the Executive Officer. A test procedure is a methodology used to determine, with a high degree of accuracy, precision, and reproducibility, the value of a specified parameter. Once the test procedure is conducted, the results are compared to the applicable performance standard to determine the

compliance status of the facility. Test procedures are subject to the provisions of Section 41954(h) of the H&SC.

14.1 Alternate Test Procedures for Certification Testing

The Executive Officer shall approve, as required, those procedures necessary to verify the proper performance of the system.

14.2 Request for Approval of Alternate Test Procedure

Any person may request approval of an alternative test procedure. The request shall include the proposed test procedure, including equipment specifications and, if appropriate, all necessary equipment for conducting the test. If training is required to properly conduct the test, the proposed training program shall be included.

14.3 Response to Request

The Executive Officer shall respond within fifteen (15) days of receipt of a request for approval and indicating that a formal response will be sent within sixty (60) days. If the Executive Officer determines that an adequate evaluation cannot be completed within the allotted time, the Executive Officer shall explain the reason for the delay, and will include the increments of progress such as test protocol review and comment, testing, data review, and final determination. If the request is determined to be incomplete or unacceptable, the Executive Officer shall respond with identification of any deficiencies. The Executive Officer shall issue a determination regarding the alternate procedure within sixty (60) days of receipt of an acceptable request.

14.4 Testing of Alternate Test Procedures

All testing to determine the acceptability of the procedure shall be conducted by ARB staff or by a third party responsible to and under the direction of ARB. Testing shall be conducted in accordance with the written procedures and instructions provided. The testing shall, at a minimum, consist of nine sets of data pairs, pursuant to USEPA Reference Method 301, “Field Validation of Pollutant Measurement Methods from Various Waste Media”, 40 CFR Part 63, Appendix A, 57 Federal Register page 61992. Criteria established in USEPA Reference Method 301 shall be used to determine whether equivalency between the two test methods exists. For situations where Method 301 is not directly applicable, the Executive Officer shall establish equivalence based on the concepts of comparison with the established method and statistical analysis of bias and variance. Method Approval of the procedure shall be granted, on a case-by-case basis, only after all necessary testing has been conducted. Because of the evolving nature of technology and procedures for vapor recovery systems, such approval may or may not be granted in subsequent cases without a new request for approval and additional testing to determine equivalency. If, after approval is granted, subsequent information demonstrates that equivalency between the two methods no longer meets the USEPA Method 301 requirements, the Executive Officer shall revoke the alternate status of the procedure.

14.5 Documentation of Alternate Test Procedures

Any such approvals for alternate test procedures and the evaluation testing results shall be maintained in the Executive Officer's files and shall be made available upon request. Any time an alternate procedure and the reference procedure are both

conducted and yield different results, the results determined by the reference procedure shall be considered the true and correct results.

14.6 Inspection Procedures

Inspection procedures are methodologies that are developed to determine compliance based on applicable performance standards or specifications. Inspection procedures are typically, but not necessarily, parametric in nature and possess a built-in factor of safety, usually at least twice the applicable standard or specification. Inspection procedures are not subject to Section 41954(h) of the H&SC.

Upon submittal of an inspection procedure to ARB, the Executive Officer shall respond within thirty (30) days, providing the applicant with a determination of the applicability of Section 41960.2(d) or Section 41960.2(e) of the H&SC.

15. DOCUMENTATION OF CERTIFICATION

Documentation of certification shall be in the form of an Executive Order listing the criteria requirements of installation and operation of a certified system. The Executive Officer shall issue an Executive Order of Certification only to those applicants or manufacturers who have demonstrated full compliance with these certification procedures and the ability to maintain such compliance as provided herein.

15.1 Executive Order

The certification Executive Order shall include the following items.

15.1.1 A list of components certified for use with the system.
15.1.2 Applicable Performance Standards, Performance Specifications and Test Procedures.
15.1.3 Applicable Operating Parameters and Limitations.
15.1.4 Warranty period(s).
15.1.5 Factory testing requirements, if applicable.

15.2 Summary of Certification Process

A summary of the certification process for each certified system shall be prepared. It shall contain documentation of the successful completion of all applicable portions of the requirements contained in this Certification Procedure including but not limited to the following: All problems encountered throughout the certification process, any changes made to address the identified problems, the location of the test station(s), the types of testing performed, the frequency and/or duration of any testing or monitoring, as appropriate, and any other pertinent information about the evaluation process shall be contained in this summary.

16. DURATION AND CONDITIONS OF CERTIFICATION

Vapor recovery system certifications shall specify the duration and conditions of certification.

16.1 Duration of System Certification

Vapor recovery systems shall be certified for a period of four years. The certification Executive Order shall specify the date on which the certification shall expire if it is not renewed as specified in Section 17.

16.2 One Vapor Recovery System per UST System

No more than one certified Phase II vapor recovery system may be installed on each underground storage tank (UST) system unless the Phase II systems have been specifically certified to be used in combination. For facilities with dedicated vapor piping, each underground storage tank and associated dispensing points shall be considered a UST system, and different UST systems may have different vapor recovery systems. For facilities with manifolded vapor piping connecting storage tanks, all the manifolded tanks and associated dispensing points are considered one UST system, and only one certified Phase II vapor recovery system may be installed in conjunction with that UST system.

16.3 Certification Not Transferable

Upon successful completion of all the requirements, certification shall be issued to the company or individual requesting certification, as the Executive Officer deems appropriate. If the ownership, control or significant assets of the certification holder are changed as the result of a merger, acquisition or any other type of transfer, the expiration date of the certification shall remain unchanged. However, no person shall offer for sale, sell, or install any system or component covered by the certification unless the system or component is recertified under the new ownership, or, in the case of a component, is otherwise certified. Systems installed prior to the transfer shall be subject to the specifications contained in Section 19 of this procedure.

16.4 Financial Responsibility

The adequacy of the (1) methods of distribution, (2) replacement parts program, (3) financial responsibility of the applicant and/or manufacturer, ~~and~~ (4) trained network of service technicians available at a reasonable cost to the consumer and (5) other factors affecting the economic interests of the system purchaser and respond to warranty claims shall be evaluated by the Executive Officer and determined to be satisfactory to protect the purchaser. A determination of financial responsibility by the Executive Officer shall not be deemed to be a guarantee or endorsement of the manufacturer or applicant.

If no system has yet been certified that meets additional or amended performance standards and specifications, as provided in Section 2.4, the applicant is also requested to provide evidence of the commitment of financial investors for the commercial manufacture of the system, a projected market demand of the system as of the operative date of the standard, a manufacturing plan with scheduled milestones for implementation of the plan, an inventory of equipment ready for shipment and a list of suppliers and subcontractors which are part of the manufacturing plan.

16.5 Warranty

The requirements of this section shall apply with equal stringency both to the original applicant and to re-builders applying for certification. For systems that include components not manufactured by the applicant, the applicant shall provide information that shows that all components meet the following requirements:

16.5.1 The applicant ~~and/~~or manufacturer, if different from the applicant, of vapor recovery system ~~equipment~~ shall provide a warranty for the vapor recovery system and components, including all hanging hardware, to the initial purchaser and any subsequent purchaser within the warranty period. This warranty shall include the ongoing compliance with all applicable performance standards and specifications. The applicant and/or manufacturer may specify that the warranty is contingent upon the use of trained installers.

16.5.2 The minimum warranty shall be for one year from the date of installation for all systems and components. The applicant may request certification for a warranty period exceeding the minimum one-year requirement.

16.5.3 The manufacturer of any vapor recovery system or component shall include a warranty tag with the certified equipment. The tag shall contain at least the following information:

(a) Notice of warranty period;
(b) Date of manufacture, or where date is located on component;
~~(c) Shelf life of equipment or sell-by date, if applicable;~~
~~(d)~~ (c) A statement that the component was factory tested and met all applicable performance standards and specifications; and
~~(e)~~ (d) A listing of the performance standards and/or specifications to which it was certified.

16.5.4 The Executive Officer shall certify only those systems which, on the basis of an engineering evaluation of such system's component qualities, design, and test performance, can be expected to comply with such system's certification conditions over the one-year warranty period specified above.

16.6 Installation, Operation and Maintenance of the System.

Systems requiring unreasonable maintenance or inspection/maintenance frequencies, as determined by the Executive Officer, shall not be certified. The manufacturer of any vapor recovery system or component shall be responsible for developing manual(s) for all installation, operation and maintenance procedures and shall be submitted with the application as provided by Section 11.5. This manual(s) shall be reviewed during the certification process and the certification shall not be issued until the Executive Officer has approved the manual(s).

16.6.1 The manual(s) shall include all requirements for the proper installation of the system and/or component. The manual(s) shall include recommended maintenance and inspection procedures and equipment performance procedures, including simple tests the operator can use to verify that the

system or component is operating in compliance with all applicable requirements. The Executive Officer may require the inclusion of additional procedures.

16.6.2 No changes shall be made to ARB Approved Manuals without the Executive Officer's prior written approval.

16.7 Identification of System Components

16.7.1 All components for vapor recovery systems shall be permanently identified with the manufacturer's name, part number, and a unique serial number. This requirement does not apply to replacement subparts of the primary component. Specific components may be exempted from this requirement if the Executive Officer determines, in writing, that this is not feasible or appropriate.

16.7.2 Nozzle serial numbers shall be permanently affixed to, or stamped on, the nozzle body and easily accessible for inspection. The location of the serial number shall be evaluated by the Executive Officer prior to certification.

16.8 Compliance Enforcement

The Executive Officer may, upon complaint or upon his or her own initiative, cause the review, inspection and/or testing of any component subject to certification under this certification procedure in any manner deemed necessary to determine ongoing compliance with certification procedure requirements and standards. Upon a determination of noncompliance based on sufficient data and documentation, the certification holder shall bear the costs incurred during component review, inspection and/or testing.

16.9 Revocation of Certifications

The certification of any system determined not to be achieving the applicable performance standards and specifications listed in CP-201 may be revoked. The Executive Officer may conduct testing for the purpose of investigation of or verification of potential system deficiencies.

Revoked systems may remain in use for the remainder of their useful life or for up to four years after the revocation whichever is shorter, provided they comply with all of the requirements of section 19. Systems with revoked certifications shall not be installed on new installations or major modification of existing installations.

17. CERTIFICATION RENEWAL

At least eighteen months prior to the expiration of the certification period, the applicant may request to renew the certification. System certifications shall be renewed without additional testing if no data demonstrating system deficiencies is found or developed prior to the expiration date. During the four-year certification period, system deficiencies shall be identified through periodic equipment audits, complaint investigations, certification or compliance tests, surveys, or other sources of information. If deficiencies are documented, they shall be resolved to the satisfaction of the ARB Executive Officer or the certification shall expire. The ARB Executive

Officer may extend certifications, for up to one year, if resolution of system deficiencies appears likely or if additional time is required to gather and evaluate information.

The renewal process, along with the sections of this document that describe them, are outlined below.

(a) Request for Renewal	Section 17.1
(b) Review of the Request	Section 17.2
(c) Evaluation of System Deficiencies	Section 17.3
(d) Letter of Intent	Section 17.4
(e) Renewal of Executive Order	Section 17.5

If no request for renewal is received by the ARB within eighteen (18) months of the certification expiration date, the Executive Officer shall send a "Notice of Pending Expiration" to the holder of the Executive Order. Table 17-1 provides an estimated timeline for the renewal process. The timeline is intended to serve as a guide to provide approximate target schedules for completion of steps in the renewal process. Failure to send such notice does not serve to extend the certification expiration date.

Each applicant submitting a certification renewal request shall be charged fees not to exceed the actual cost of evaluating and/or testing the system to determine whether it qualifies for renewal. Refer to Section 10 for more information on Fee Payment.

17.1 Request for Renewal

The request for renewal shall be written and signed by an authorized representative, and shall include the items listed below:

17.1.1 The Executive Order Number to be renewed;
17.1.2 Identification of any system or component deficiencies through warranty claims or other information such as;
- (a) User feedback
- (b) Contractors/Testers
- (c) Distributors

17.1.3 Amendments to the Executive Order such as:
- (a) Warranty information
- (b) Installation, Operations, and Maintenance Manual
- (c) System or component drawings
- (d) Component modifications

17.1.4 Updates to the training program;
17.1.5 Factory Testing Requirements;
17.1.6 Agency approvals or determinations, if any system modifications have been made since the original approval/determinations (to be submitted prior to approval of EO amendment, see Section 1.1), and
17.1.7 Other information such as the Executive Officer may reasonably require.

17.2 Review Request

The Executive Officer shall review the request and determine if any information provided warrants further evaluation/testing or if amendments to the Executive Order

are needed. The applicant will be notified within 60 days of the receipt of the request and whether the submission of additional information is required.

17.3 Evaluation of System Deficiencies

In addition to the information provided in Section 17.1, the Executive Officer shall solicit information on system or component deficiencies through equipment audits, complaint investigations, certification or compliance tests, surveys, VRED data (if applicable), any deficiencies identified by District staff, or other sources of information. The Executive Officer may conduct testing to investigate and/or verify system or component deficiencies. Testing to evaluate component modifications, VRED lists (if applicable), to demonstrate compatibility, or for challenge mode determinations, will be subject to the applicable sections of CP-201. If potential deficiencies are noted, an evaluation will be conducted to determine if:

17.3.1 The deficiency has been or is in the process of being resolved;
17.3.2 System/component modification(s) are necessary;
17.3.3 Executive Order modifications are necessary;
17.3.4 Additional testing is required.

17.4 Letter of Intent

After the review has been completed, a letter of intent will be issued to either 1) renew the Executive Order or 2) allow the Executive Order to expire. Conditions for Expired Certifications are discussed in Section 19 of this certification procedure. The letter of intent should be issued prior to the Executive Order expiration date but will not be issued prior to completion of the evaluation process described in Sections 17.1, 17.2 and 17.3. If the evaluation process is not complete and the letter of intent is not issued prior to the expiration date then the Executive Officer may determine that installation of the system at new facilities or major modifications will not be allowed during the extension period.

The Executive Officer may allow up to a 1-year extension if:

17.4.1 resolution is likely but renewal time is insufficient; or
17.4.2 additional time is necessary to gather and evaluate information.

17.5 Renewal of Executive Order

Executive Orders approved for renewal shall be valid for a period of four years.

Table 17-1
Estimated Timeline for the Renewal Process

Action	By	Time before Expiration
Submittal of renewal request	Applicant	18 months
Notice of pending expiration (if no renewal request received)	ARB	18 months
Solicitation of system information	ARB	18 months (or at time of receipt of request)
Application review and initial response	ARB	
Renewal request documentation completed	ARB/Applicant	15 months
Submittal of system information for other agency approval/determinations	Applicant	12 months
If testing will be required		
Draft Testing protocol and site identification	ARB/Applicant	14 months
Seal site/start test	ARB	12 months
End testing	ARB	11 to 6 months
Administrative		
Letter of Intent and draft Executive Order	ARB	3 months
Final Executive Order	ARB	0 months

17.6 Denial of Executive Order Renewal

System certifications shall not be renewed if the Executive Officer determines that the performance standards and/or specifications in the Executive Order and CP-201 fail to be met. Non-renewed systems may remain in use for the remainder of their useful life or for up to four years after the expiration date, whichever is shorter, provided the requirements of Section 19 are met.

18. AMENDMENTS TO EXECUTIVE ORDERS

Amendments to Executive Orders may be requested to add alternate or replacement components to a certified system. Alternate or replacement components may be modifications to originally certified components, components originally certified on another system, or new components.

Sections of this document that describe the process to amend an EO are outlined below.

(a)	Request for Amendment	Section 18.1
(b)	Review of the Request	Section 18.2
(c)	Testing	Section 18.3
(d)	Letter of Intent	Section 18.4
(e)	Issuance of Executive Order	Section 18.5

18.1 Request for Amendment

The request for amendment shall be written and signed by an authorized representative of the applicant, and shall include the items listed below:

18.1.1 Executive Order to be amended;
18.1.2 Description of change;
18.1.3 Changes to the Executive Order such as:
- (a) System or component drawings
- (b) Installation, Operations, and Maintenance Manual
- (c) Fuel and System Compatibility

18.1.4 Agency approvals or determinations (to be submitted prior to approval of EO amendment, see Section 1.1);
18.1.5 Updates to the training program;
18.1.6 Applicable information specified in Section 11 ; and
18.1.7 Other information such as the Executive Officer may reasonably require.

18.2 Review of the Request

Requests for alternate or replacement components, equipment reconfigurations, or software changes will be subjected to an engineering evaluation to determine the level of testing required. The Executive Officer may require full operational testing of at least 180 days, allow abbreviated and/or limited operational testing, or determine that a component modification does not affect the performance of the vapor recovery system and therefore no testing is required.

General criteria to be considered when determining the level of testing are as follows:

(a) extent of physical changes to the component;
(b) extent of material changes to the component;
(c) changes that may affect the durability of the component;
(d) whether performance specifications are the same;
(e) similarity of system designs (i.e. for component transfers); and
(f) information from previous certification testing.

18.2.1 Modified Components

Modified components (i.e., any changes made to vapor recovery components certified as part of a system) may be certified if testing demonstrates that performance standards and specifications will continue to be achieved. The level and duration of operational and/or other testing will be determined by the Executive Officer based on an engineering evaluation.

18.2.2 Transfer of Components from Another Certified System

Components certified with a system may subsequently be considered for use with another certified system of similar design provided that the performance standards and specifications of the components, as specified in the application for the system, are equivalent. Performance standards and specifications, and compatibility, are to be verified by testing and/or engineering evaluation.

Abbreviated/limited operational testing may be considered since the component has previously undergone 180-day/full certification testing as part of another system. Abbreviated tests will only be allowed for components whose performance is not expected to change or degrade over the longer test period.

18.2.3 New Component(s) that have not been Previously Certified on a System.

Components that have not previously been certified with a system, whether for use as an alternate or replacement component, shall be required to undergo operational testing of at least 180 days. Limited operational testing may be considered for such components, if determined to be appropriate by the Executive Officer.

18.2.4 Components that do not affect the performance of the vapor recovery system.

Certification shall not be required for components, either new or modified, determined by the Executive Officer not to affect the performance of the vapor recovery system. The Executive Officer shall notify the applicant in writing of the determination. However, in some cases, such as when a part number changes, an amendment to the Executive Order may be required. An engineering evaluation shall be conducted to document that the change will not affect the performance of the vapor recovery system.

18.2.5 Other Amendments to Executive Orders

(a) System Configurations

Alternative configurations of components of a certified system may be considered for certification based on limited and abbreviated testing. Examples of alternative system configurations include dual fill or remote fill for Phase I and processor placement or vapor piping options for Phase II.

(b) Software Updates

Software revisions of previously certified software components may be considered for certification with limited and/or abbreviated testing. The software change may be approved with no testing if the Executive Officer finds that the software modifications do not affect the vapor recovery system or in-station diagnostic system performance.

18.3 Testing

System or component modifications shall be subjected to sufficient operational, challenge mode, and/or VRED testing to verify the performance and durability of the modified system relative to the certified system that was originally tested.

The level of operational testing to be required is determined as outlined in Section 18.2. Normally, full operational testing of at least 180 days is required. Abbreviated and/or limited operational tests may be allowed in some cases , at the discretion of the Executive Officer. If operational tests are abbreviated, the minimum duration (and gasoline throughput requirement) will be specified by the Executive Officer. The test procedure and test frequency requirements for limited operational tests will be specified by the Executive Officer.

If operational testing is required, then the applicant will choose an appropriate test site meeting the requirements of Section 13.1. The applicant shall submit sufficient information to demonstrate that the requirements of Section 11.8 are met.

18.4 Letter of Intent

A letter shall be sent to the applicant stating the Executive Officer's intent to either issue the amended Executive Order or deny the request.

18.5 Issuance of Executive Order

The original expiration date shall be maintained for all Executive Order amendments unless a renewal, as described in Section 17, is specifically requested and approved.

Previous versions of the Executive Order are superseded, as discussed in Section 19.

19. REPLACEMENT OF COMPONENTS OR PARTS OF A SYSTEM WITH A TERMINATED, REVOKED, SUPERSEDED OR EXPIRED CERTIFICATION

This section applies to systems for which the certification was terminated, revoked, superseded, or has expired. Systems that were installed as of the operative date of a new standard, or that are otherwise subject to Health and Safety Code section 41956.1, may remain in use for the remainder of their useful life or for up to four years after the effective date of the new standard or the date of revocation, whichever is shorter, provided they comply with all of the specifications of this section. Installed systems that have superseded or expired Executive Orders, unless renewed in accordance with Section 17, may remain in use for up to four years after the expiration date of the Executive Order, provided they comply with all of the specifications of Section 19.

19.1 Component and Replacement Parts

Components and replacement parts meeting the currently and prospectively operative performance standards or specifications may be approved for use as a replacement part with the no-longer-certified system for the remainder of the allowable in-use period of the system.

When an approved, compatible component or replacement part that meets the operative standards or specifications is determined to be commercially available, only that component or replacement part shall be installed except as permitted by Section 19.2. Approval shall not require the replacement of already-installed equipment prior to the end of the useful life of that part or component. The approved replacement component shall be considered to be commercially available if that component can be shipped within three weeks of the receipt of an order by the manufacturer of the component.

19.2 Component or Replacement Part Not Meeting Specifications

A component or replacement part not meeting the currently operative performance standards or specifications, but which was certified for use with the system, ~~shall~~ may be used as a replacement only ~~if~~ under either of the following circumstances:

(a) no compatible component or part that meets the new standards or specifications has been approved as a replacement part, or

(b) during a reasonable time period specified by the Executive Officer to allow for the sell-through of existing inventory of previously certified components or replacement parts.

19.3 Component or Part Not Certified with System and Not Meeting Specifications

A component or part that was not certified for use with the system, and that does not meet all of the currently operative standards or specifications, may be approved as a replacement part or component for use on the system provided that there are no other commercially available certified parts meeting the most current performance standards or specifications.

19.4 Procedure for Approval of Replacement Parts

19.4.1 A request shall be submitted to the Executive Officer.

19.4.2 The request shall include the information outlined in Section 18.1 and information demonstrating that the component is compatible with the system.

19.4.3 Requests for replacement parts will be subjected to an engineering evaluation to determine the level of testing required. The Executive Officer may require full operational testing of at least 180 days and other certification tests (e.g., VRED or challenge), allow abbreviated and/or limited operational testing, or determine that additional testing is not necessary.

General criteria to be considered when determining the level of testing are as follows:

(a) similarity of system designs;

(b) information from previous certification testing; and
(c) compatibility of the replacement part.

19.4.4 The Executive Officer shall issue an approval letter to authorize the use of the approved replacement part and to detail any modification(s) to the Executive Order for which the part is approved. Requests not granted shall be documented with a disapproval letter.

20. REQUIREMENTS FOR, AND CERTIFICATION OF, LOW PERMEATION HOSES

All hoses which carry liquid fuel against the outermost hose wall shall permeate at a rate of no more than 10.0 grams per square meters per day ($g/m^2/day$) as determined by UL 330 (7th ed) - Underwriters Laboratories' Standard for Hose and Hose Assemblies for Dispensing Flammable Liquids.

The UL 330 (7th ed.) testing results shall comprise all of the certification testing for certification as a low permeation hose.

20.1 Request for Certification

If UL 330 (7th ed.) testing is not conducted by the Executive Officer, then the Executive Officer shall be made a beneficiary of the data within the contract of the applicant and the testing facility. All data and documentation relevant to determining the permeation rate of the hose, as described in section 15 of UL 330 (7th ed.), shall be transmitted to the Executive Officer by the testing facility, concurrently when transmitted to the applicant.

The request for certification shall be written and signed by an authorized representative of the applicant, and shall include the items listed below:

20.1.1 The applicant shall submit evidence that the hose is compatible with all hardware that it will be connected to when in use within the gasoline dispensing system.

20.1.2 The applicant shall provide information regarding the materials specifications of all components, including evidence of compatibility with all fuels in common use in California and approved as specified in Section 3.8. If the applicant is requesting a certification for use only with specified fuel formulations, the applicant shall clearly identify, in the application, the included and excluded fuel formulations for which certification is requested.

20.1.3 The applicant shall state the expected useful life of the hose.

20.1.4 All applications shall include detailed engineering drawings of the hose and hose fittings. These drawing must provide all hose and fitting dimensions, including thicknesses of each individual hose material layer. Further, all hose, fitting and gasket materials must be identified.

20.1.5 Hose installation instructions shall be included with the application.

20.1.6 The applicant shall submit evidence of financial responsibility to ensure adequate protection to the end-user of the product as specified in Section 16.4 and to demonstrate the ability to pay for certification tests and cost.

20.1.7 The applicant shall comply with the warranty requirements of Section 16.5 and shall submit a copy of the warranty for the hose and samples of component tags.

20.1.8 All applications shall include the estimated retail price of the hose.

20.2 Hose Lengths

Once a hose of a particular construction has been determined to comply with the low permeation hose standard per section 20, the Executive Officer shall specify the length of the hose as a condition of certification after considering other applicable performance standards or specifications.

20.3 Identification of Certified Hose

Certified low permeation hoses shall comply with the marking and identification requirements of section 16.7