California Environmental Protection Agency

Air Resources Board

Vapor Recovery Test Procedures

TP - 201.2

DETERMINATION OF EFFICIENCY OF
PHASE II VAPOR RECOVERY SYSTEMS OF
DISPENSING FACILITIES

Adopted: April 12, 1996

This method is being amended. For ease of viewing, the method is shown as repealed text and proposed text.

California Environmental Protection Agency
Air Resources Board

Vapor Recovery Test Procedure

TP-201.2

Determination of Efficiency of Phase II Vapor Recovery Systems of Dispensing Facilities

1 APPLICABILITY

A set of definitions common to all certification and test procedures is in:

D-200 Definitions for Certification Procedures and Test Procedures for Vapor Recovery Systems

For the purpose of this procedure, the term "ARB" refers to the State of California Air Resources Board, and the term "ARB Executive Officer" refers to the Executive Officer of the ARB or his or her authorized representative or designate.

1.1 General

This procedure applies to the determination of Phase II vapor recovery system efficiency at dispensing facilities by mass balance principles. This procedure applies to any vapor emissions associated with the dispensing of any fluid, although it is written to reflect application to the hydrocarbon (HC) vapors associated with the dispensing of gasoline.

1.2 Modifications

Modification of this procedure may be necessary for vapors and fluids other than the hydrocarbon vapors associated with the dispensing of gasoline.

Any modification of this method shall be subject to approval by the ARB Executive Officer.

2 PRINCIPLE AND SUMMARY OF TEST PROCEDURE

The purpose of this test procedure is to determine the percent vapor recovery efficiency for a vapor recovery system at a dispensing facility. The percent vapor recovery efficiency is the percent of vapors displaced by dispensing which are recovered by a vapor recovery system rather than emitted to the atmosphere.

2.1 Principle

This is done by simultaneously measuring the vapor mass flux through four significant areas:

$m_{(1)}$ = the mass flux through openings at the dispensing interface,

$m_{(2)}$ = the mass flux through the vapor return line,

$m_{(3)}$ = the mass flux through the dispensing facility vent, and

$m_{(4)}$ = the mass flux through the assist processor.

The percent vapor recovery efficiency is determined as follows:

$$\%\ \text{vapor recovery efficiency} = \frac{m_{(2)} - [m_{(3)} + m_{(4)}]}{[m_{(2)} + m_{(1)}]} \times 100\%$$

2.2 Summary

As required to determine an emissions parameter and except where otherwise specified, the equipment and procedures specified in the following test methods shall be used.

EPA Method 2A	Direct Measurement of Gas Volume Through Pipes and Small Ducts
EPA Method 2B	Determination of Exhaust Gas Volume Flow Rate From Gasoline Vapor Incinerators
EPA Method 18	Measurements of Gaseous Organic Compound Emissions by Gas Chromatography
EPA Method 25A	Determination of Total Gaseous Organic Compound Emissions Using a Flame Ionization Detector
EPA Method 25B	Determination of Total Gaseous Organic Compound Emissions Using a Nondispersive Infrared Analyzer

3 BIASES AND INTERFERENCES

3.1 Vehicle Biases and Interferences

3.1.1 Inclusion of Vehicles in Test Procedure

A representative vehicle matrix shall be determined for the subject facility according to TP-201.2B.

3.1.2 Exclusion of Certain Vehicle Results from Test Results

Include the following vehicles in this test procedure, but exclude results for such vehicles from any determinations of compliance with or violation of the certification criterion. Report results for such vehicles separately, with a description of the likely causes for their failing to meet any requirements specified below.

For the purpose of determinations of compliance with or violation of the certification criterion, exclude vehicles with:

(1) **non-conformance with other applicable requirements,**

results for vehicles with fillpipe access zones which do not conform with applicable specifications and requirements (vehicles shall arrive at the facility with properly positioned fillpipe caps and leaded fuel restrictors appropriate for each vehicle);

(2) **non-conformance with vehicle leak check requirement,**

> **Note:** This vehicle leak check requirement may be waived, on a vehicle-by-vehicle basis, upon determination by the ARB Executive Officer that the vehicle matrix required by TP-201.2A can not otherwise be filled.
>
> This vehicle leak check requirement may be waived, on a system-by-system basis, upon determination by the ARB Executive Officer that the system is expected to always maintain negative gauge pressure in all vehicle tanks during all dispensing episodes.

results for vehicles which do not pass the vehicle leak check requirement (>0.01 cfm); and

(3) **non-conformance with sleeve leak check requirement, and**

results for vehicles with leak detector readings (per EPA Method 21) above 0.1% LEL within one inch (2.5 cm) outside the sampling sleeve; and

(4) **inadequate dispensed volume.**

results for vehicles into which less than four gallons are dispensed.

3.2 Facility Biases and Interferences

3.2.1 Static Pressure Performance

The subject dispensing facility shall demonstrate compliance with the appropriate static pressure performance standard as required by CP-201.

3.2.2 Representative Facility Operating Matrix

The subject facility shall operate within the matrix of conditions established in the specifications of certification. See CP-201 § 3 and § 5.

During certification testing, any conditions of installation, operation, and maintenance which deviate from such specifications, shall be recorded and included as amendments to the specifications of certification. Subsequent to such certification, any conditions which occur outside such specifications (for any facility installed, operating, and maintained on the basis of such certification) shall constitute a violation of the specifications of certification.

3.2.3 Dispensed Liquid Characteristics

Some unusual situations may require a more extended calibration protocol if, in a certain case, the speciation of vapors is significantly different than that for gasoline vapors. Two alternative approaches, both of which must be demonstrated in practice and approved as modifications to this procedure are suggested:

(1) calibrate all analyzers to appropriate dilutions of a Tedlar® bag sample taken from the headspace of the facility involved in the proposed test, or

(2) use the same make and model of analyzer at each test point while minimizing the amount of vapor taken from the vapor return line. At the vapor return line test point, this may require a high flow (to reduce time lag) sample extraction and return loop and a low flow (to satisfy analyzer requirements) sample line from the sample loop to the analyzer.

3.3 Equipment Biases and Interferences

Alternatives to the required equipment can be as good or better in certain testing circumstances. Such alternatives shall only be used subject to prior written approval by the ARB Executive Officer, as required in § 13.

A primary example of such an alternative is the use of NDIR instead of FID at Test Point 1 for analyzing the sleeve sample. There NDIR can be used based on data and documentation which show, to the satisfaction of the ARB Executive Officer, satisfactory control of biases and interferences due to the use of the equipment.

4 SENSITIVITY, RANGE, AND PRECISION

The measurements of concentration and volumetric parameters required by this test procedure are well within the limits of sensitivity, range, and precision of the specified equipment.

5 EQUIPMENT

Equipment specifications are given below and some equipment configurations are shown in Figures 1 through 21.

(1) **Hydrocarbon Analyzer**

The default mode of determining hydrocarbon concentrations in this procedure is a determination of total hydrocarbon concentration as propane. Alternative test procedures for determining non-methane hydrocarbon concentration have been validated for some applications and may be used, subject to the approval of the ARB Executive Officer. Such procedures typically determine both the total hydrocarbon concentration and methane concentration; non-methane hydrocarbon concentration is then determined as the difference.

The range of any hydrocarbon analyzer shall be selected such that the maximum concentration measured is no more than 90 percent of the range and the average concentration is no less than 10 percent of the range.

Any sampling and analysis system using a non-dispersive infrared detector (NDIR) shall be designed so that 100% of the sample that is extracted for analysis can be returned, unaltered, to the sample manifold.

An analyzer with a NDIR with selected filters to block methane measurement shall be used when the efficiency is to be calculated for non-methane hydrocarbon and when the system under test is small such that extracting a sample for a FID analyzer will affect the system operating parameters. When using a NDIR instrument for total hydrocarbon measurements, a second channel must be present to measure the methane concentration or the instrument filters must be such that total hydrocarbon is measured.

Any sampling and analysis system using a flame ionization detector (FID) can not be designed so that 100% of the sample that is extracted for analysis can be returned, unaltered, to the sample manifold, because the operation of the FID significantly alters the portion of the sample which is analyzed.

An analyzer with a FID may be used for the test when a measurement is for total hydrocarbon and there is no requirement for returning sample, unaltered, to the sample manifold. An important example is the total hydrocarbon measurement on the diluted sample from a test sleeve which has captured transfer emissions from the nozzle fillpipe interface. In this case, the transfer emissions are on their way to the atmosphere normally, so there is no need to return them to a sample manifold.

(2) **Carbon Monoxide Analyzer**

Use a NDIR analyzer for measurement of exhaust CO concentrations. To the extent practical, the analyzer range shall be selected such that the maximum concentration measured is no more than 90 percent of the range and the average concentration is no less than 10 percent of the range.

(3) **Carbon Dioxide Analyzer**

Use a NDIR analyzer for measurement of exhaust CO_2 concentrations. The analyzer range shall be selected such that the maximum concentration measured is no more than 90 percent of the range and the average concentration is no less than 10 percent of the range.

(4) **Volume**

Use a calibrated positive displacement gas volume meter or a turbine meter for measurement of volumetric flow rate.

Use rotary type positive displacement meter(s) with a back pressure limit (BPL) less than:

1.10 inches water column at a flowrate of 3,000 CFH down to
0.05 inches water column at a flowrate of 30 CFH for a meter with a rating over 1000 CFH and
0.70 inches water column at a flowrate of 800 CFH down to
0.04 inches water column at a flowrate of 16 CFH for a meter with a rating of or under 1000 CFH.

Meter(s) shall be equipped with taps accommodating the following equipment:

(1) taps on the inlet side for

(a) a thermocouple with a range of 0 to 150 ^{o}F and

(b) a pressure gauge with a range providing absolute pressure readings within 10 to 90% of the range (more than one gauge shall be used, if necessary) and

(2) taps on the inlet and outlet sides for a differential pressure gauge with a range of 0 to < 2x BPL (i.e. full scale shall be less than twice the back pressure limit) or any other range appropriate to allow detection of a pressure drop greater than the BPL.

(5) **Pressure**

Use a pressure measuring device (transducer, inclined manometer or Magnahelic gauge) with a design range suitable for the pressure being measured. The tap for the pressure measurement shall be located on the sample coupling attached to the inlet of the volume meter.

(6) **Temperature**

Use a temperature measuring device (thermocouple or mercury in glass thermometer) with a design range suitable for the temperature being measured. The tap for the temperature measurement shall be located on the sample coupling attached to the inlet of the volume meter.

5.1 Equipment for Test Point 1 (Nozzle Sleeve)

5.1.1 Vehicle Leak Check Equipment

The following equipment is necessary to perform required vehicle leak checks; or to demonstrate that alternative equipment will perform equivalently (see "ALTERNATIVE TEST PROCEDURES" section).

5.1.1.1 Fillpipe Interface

A fillpipe interface shall be used which provides a seal at the fillpipe outlet except for:

(1) tubing for pressurizing the fillpipe and vehicle tank with nitrogen and

(2) tubing for connection to a pressure transducer which can register the pressure in the fillpipe and vehicle tank.

5.1.1.2 Flowmeter and Pressure Transducer

A flowmeter and pressure transducer shall be used which are appropriately sized for measuring 0.01 cfm and one-half (0.5) inches water (gauge) at the fillpipe interface.

5.1.1.3 Pressure System

The pressure system for the vehicle leak check shall consist of a nitrogen bottle (2000 psig, commercial grade), a control valve for regulating the bottle pressure to 1 psig, a needle valve, two Magnahelic gauges (0 - 30 and 0 - 10 inches water) for determining the pressure upstream and downstream of the needle valve, and a hose for supplying pressure to the vehicle tank. The pressure system shall provide for monitoring the pressure in the fillpipe and vehicle tank during the vehicle leak check.

5.1.2 Sleeve Leak Check Equipment

A volatile organic compound detector which complies with the requirements of EPA Method 21 shall be used.

5.1.3 Implements

5.1.3.1 Sleeve

The sleeve is designed for vapor sampling at the dispensing area. An example design for the sleeve is shown in Figures 6 through 8.

Other designs may be used which accommodate different dispensing area geometries, subject to the requirement that other designs yield no more pressure drop at five cubic feet per minute (cfm) air flow than the design shown. Compliance with this requirement must be documented in the test report required in the section, "REPORTING RESULTS".

The design shown has been tested, at 5 cfm with -0.005 "WC gauge pressure inside the sleeve, during use in a balance nozzle application. The comparison standard may differ in other dispensing geometries.

5.1.3.2 Sleeve Sample Tubing

The sample tube connecting the sleeve to its instrumentation shall be as flexible and lightweight as practical so that the behavior of the nozzle operator is minimally affected by testing activities. It is not necessary to return the unanalyzed portion of sample flow back to the GDF vapor recovery system.

In general, only a portion of the sleeve flow is used for analysis. Most analyzers sample at a flow rate far below the 5 cfm sleeve flow rate. In such a case, sleeve sample tubing must be configured so that a portion of the sleeve flow is representatively sampled by the analyzer at conditions suitable for the analyzer requirements.

5.1.3.3 Sleeve Sample Pump

Note: The sample flow rate must always be high enough to prevent the sleeve leak check from registering more than 0.1% LEL (2,100 ppm as propane).

Use a carbon vane (or equivalently non-contaminating) pump to minimize contamination of the sample.

The pump must be capable of pulling about 5 cfm, but lower flow rates are acceptable subject to the following requirement:

The pressure drop is typically a few inches Hg, depending on tubing and fittings.

5.1.4 Instruments

5.1.4.1 Hydrocarbon Concentration

Use an FID with full scale values of 1.00% and 10.0%. Perform span and calibration checks with propane standards.

5.1.4.2 Volume (See § 5.4)

5.1.4.3 Pressure

Use a pressure measuring device (transducer, inclined manometer or Magnahelic gauge) with a design range suitable for the pressure being measured. The tap for the pressure measurement shall be located on the sample coupling attached to the inlet of the volume meter.

5.1.4.4 Temperature

A transducer with an initial design range of 0 - 150°F in a thermocouple design, depending on the sleeve tubing chosen. The tap must be near the HC instrument inlet.

5.2 Equipment for Test Point 2 (Vapor Return)

5.2.1 Implements

5.2.1.1 In-line Plumbing

Design goals for plumbing arrangements, regardless of GDF, are:

(1) practically minimize length of vapor return line between the nozzle and the sample point for Test Point 2; do this to minimize problems related to entry of condensation from the vapor return line into the Test Point 2 sample line;

(2) practically minimize pressure drop across in-line plumbing; and

(3) return any unanalyzed sample to the GDF vapor return line.

5.2.1.2 Fittings

Plumbing shall be designed for easy adaptability to co-axial, twin hose, and any other GDF configurations which may be encountered. A one inch (i.d.) ball valve shall isolate the vapor return line from other implements.

5.2.2 Instruments

5.2.2.1 Hydrocarbon Concentration

Use a NDIR with a full scale value of 100.0%, or a lower value which is known to be above the maximum concentration possible at test conditions. Perform span and calibration checks with appropriate propane standards.

5.2.2.2 Volume (See § 5.4)

5.2.2.3 Pressure

Use a pressure measuring device (transducer, inclined manometer or Magnahelic gauge) with a design range suitable for the pressure being measured. The tap for the pressure measurement shall be located on the sample coupling attached to the inlet of the volume meter.

5.2.2.4 Temperature

Use a transducer with an initial design range of 0 - 150°F in a thermocouple design.

5.3 Equipment for Test Point 3 (Vent)

5.3.1 Implements

Unanalyzed sample shall be returned to the system to avoid perturbation of the system pressure.

5.3.2 Instruments

5.3.2.1 Hydrocarbon Concentration

Upstream from any final point of release to the atmosphere, use a NDIR with a full scale value of 100.0%, or a lower value which is known to be above the maximum concentration possible at test conditions. Perform span and calibration checks with appropriate propane standards.

Sample may be collected downstream of the normal point of release to the atmosphere in situations where upstream techniques are precluded. Some special sealed sleeve or other means of gathering and delivering sample to the analyzer must be employed; before testing commences, any such sleeve or means must pass the leak check criteria given in the procedures provided for leak checking the nozzle sleeve. Tape and polyethylene bags have been used to successfully meet this requirement.

5.3.2.2 Volume (See § 5.4)

5.3.2.3 Pressure

Use a pressure measuring device (transducer, inclined manometer or Magnahelic gauge) with a design range suitable for the pressure being measured. The tap for the pressure measurement shall be located on the sample coupling attached to the inlet of the volume meter.

5.3.2.4 Temperature

Use a transducer with an initial design range of 0 - 150°F in a thermocouple design.

5.4 Equipment for Test Point 4 (Assist Processor Exhaust)

See section, "ALTERNATIVE TEST PROCEDURES" if equipment specified above is not applicable.

6 CALIBRATION PROCEDURE

A record of all calibrations shall be maintained.

6.1 Analyzers

Follow the manufacturer's instructions concerning warm-up time and adjustments. On each test day prior to testing, zero the analyzer with a zero gas and span with a known concentration of calibration

gas at a level near the highest concentration expected. Perform an intermediate zero and span calibration approximately 2 hours after the initial calibration and at any time a calibration drift is evident. Check for zero and span calibration drift at the end of the test period. All calibrations and adjustments shall be documented.

6.2 Volume Meters

Meters shall be calibrated on an annual basis.

6.3 Pressure Transducers

Calibrate pressure transducers prior to testing and immediately following the test period with a static pressure calibrator for a range of -3 to +3 inches water or appropriate range of operation; or calibrate pressure transducers in accordance with manufacturer's specifications and provide a copy of such specifications in the Certification Test Report.

6.4 Temperature Transducers

Calibrate temperature transducers every six months using ambient air, the temperature of which is determined by a NIST traceable mercury-glass thermometer.

7 PRE-TEST PROTOCOL

7.1 Location of Test Site

Prototype systems will be located within 100 miles of Sacramento for testing. Other locations may be accepted at the discretion of the ARB Executive Officer.

7.2 Specification of Test, Challenge, and Failure Modes

The specification of test, challenge, and failure modes such as the number of liquid transfer episodes, volume and volumetric rate of liquid transfer, storage tank volumes, etc. shall be done according to the principles of CP-201 § 5 for the testing and evaluation of vapor recovery equipment.

7.3 System and Facility Preparation

The required preliminary evaluation shall set the final requirements for facility preparation. The dominant principle shall be that testing activities minimally alter facility and system conditions. As the installation of test equipment can alter facility and system values for critical parameters, the following final preparation procedures shall be applied, subject to determination by the ARB Executive Officer of more effective alternatives for some procedures and the only practical alternatives for other procedures:

(1) Install all equipment and wait at least 16 hours before testing. Until then, provide conditions which minimally disturb facility and system operations due to the presence of such equipment for such time; or

Warning: the following alternative shall only be used after a determination, per the preliminary evaluation, that system pressure is the only system parameter disturbed by equipment installation and that volumetric flow from the system can be monitored by procedures which minimally disturb facility and system operations.

(2) install all equipment and wait until a determination of a flow of 0.1 ACF from the system before testing. Until then, provide conditions which minimally disturb facility and system operations due to the presence of such equipment for such time.

7.4 Testing Sequence

Note: For the applicant, this test procedure is the most costly required test procedure. As the applicant's candidate system must pass all required tests, costs for the applicant can be minimized by performing all other procedures before the "100 car" test specified in this procedure and TP-201.2A. In this way, if the system fails one of the less costly tests, required redesign and refabrication of the system can proceed at the least cost.

The testing sequence shall be as follows:

7.4.1 Other Required Test Procedures

All other required test procedures shall be performed before the application of TP-201.2A for the 100 car test specified in this procedure.

7.4.2 Other Required Aspects of this Test Procedure

All other required aspects of this test procedure shall be performed before the application of TP-201.2A for the 100 car test specified in this procedure, e.g. testing idle nozzle episodes.

8 TEST PROCEDURE

The facility and system shall be prepared to operate according to any specified test, challenge, and failure modes.

In this section, the term "vent" and the specified procedures for testing vents shall also apply to any assist processor with which such procedures are compatible. Procedures are also specified for incinerator type assist processors. Any assist processor which is incompatible with the application of these procedures shall not be certified until the compatibility requirements of the certification procedures are met.

8.1 Test Locations

Figure 1 illustrates mass flux test locations.

8.1.1 Test Point 1 (Nozzle Sleeve)

Figure 2 emphasizes the mass flux test location for Test Point 1 (Nozzle Sleeve).

8.1.1.1 Vehicle Leak Check Procedure

Three different procedures are acceptable for checking leaks in vehicle tanks and plumbing.

(1) **Nitrogen Pressurization**

Figure 3 illustrates the following procedure, which is necessary to perform required vehicle leak checks; or to demonstrate that an alternative procedure will perform equivalently (see "ALTERNATIVE TEST PROCEDURES" section).

(a) Connect equipment for vehicle leak check to vehicle fillpipe.

(b) Open main valve on the nitrogen supply bottle and adjust the needle valve until the pressure in the fillpipe reaches one-half (0.5) inches water (gauge). If such pressure can not be maintained for 15 seconds, record an unacceptable vehicle leak for the subject vehicle.

Determine the leak rate by either timing a volume of 0.1 ft^3 or by observing for 15 seconds, whichever results in a smaller volume being transferred to the vehicle tank. Record readings.

(d) Disconnect equipment from the vehicle fillpipe and proceed with further test procedures.

(e) If a leak-rate greater than 0.01 cfm, record an unacceptable vehicle leak for the subject vehicle.

(2) **Manual Compression**

Figure 4 illustrates the following procedure.

(a) Use a vapor tight, sealed, compressible device with an attached pressure gauge and seal the device against the vehicle fill pipe interface.

(b) Compress the device in a repeatable and controlled manner and record readings from the pressure gauge.

(c) Determine vehicle leak check status by comparing pressure readings with a calibration chart which must be developed independently, for each compression device and tester, as specified below:

(i) Perform the specified vehicle leak check procedure and the alternative compression procedure on a series of vehicles.

(ii) Correlate the readings from the specified vehicle leak check procedure and the alternative compression procedure which relate to passing and failing the

vehicle leak check requirement. Include all significant variables in the correlation.

(iii) Construct a calibration chart from the correlations in (ii), indicating those readings from the alternative compression procedure which correlate with passing and failing the vehicle leak check requirement.

(3) **Manual De-compression**

Figure 5 illustrates the following procedure.

(a) Prepare to listen for a sound of vapor de-compression from the vehicle tank and fillpipe, before removing a vehicle fillpipe cap.

(b) Remove the cap in a quick, repeatable, and controlled manner and listen for a sound of vapor de-compression from the vehicle tank and fillpipe. Record a positive or negative reading of the occurrence of such sound when the cap is removed.

(c) Determine vehicle leak check status by comparing positive readings with a calibration chart which must be developed independently, for each de-compression tester, as specified below:

(i) Perform the specified vehicle leak check procedure and the alternative de-compression procedure on a series of vehicles.

(ii) Correlate the readings from the specified vehicle leak check procedure and the alternative de-compression procedure which relate to passing and failing the vehicle leak check requirement. Include all significant variables in the correlation.

(iii) Construct a calibration chart from the correlations in (ii), indicating those readings from the alternative de-compression procedure which correlate with passing and failing the vehicle leak check requirement.

8.1.1.2 Nozzle Sleeve Assembly

The sleeve must be sampling around all potential vapor leak paths at all times during testing including:

dispensing periods; and

"idle nozzle" periods

as explained below, after a description of the sleeve leak check procedure.

(1) **Sectional View of Sleeve**

Figure 6 illustrates a sectional view of a nozzle sleeve.

(2) **Axial View of Sleeve**

Figure 7 illustrates an axial view of a nozzle sleeve.

(3) **View of Sleeve on Nozzle**

Figure 8 illustrates a view of a nozzle sleeve on a nozzle.

The sleeve must be sampling around all potential vapor leak paths at all times during testing including:

(a) dispensing periods; and

(b) "idle nozzle" periods

as explained below, after a description of the sleeve leak check procedure.

8.1.1.3 Leak Check of Sleeve

At least once during each dispensing period and once during "hang time" (as soon as practical after nozzle "hang-up"), readings must be taken with a leak detector per EPA Method 21. If possible, adjust the sleeve so that readings are below 0.1% LEL (2,100 ppm as propane) during within one inch (2.5 cm) outside the sampling sleeve.

(1) **View of Combustible Gas Detector**

Figure 9 illustrates a view of a combustible gas detector.

(2) **View of Combustible Gas Detector in Use**

Figure 10 illustrates a view of a combustible gas detector in use.

8.1.1.4 Nozzle Sleeve Measurements

The sleeve temperature and pressure measurements must be taken from a sample manifold attached to the inlet of the volume meter on the sleeve sampling system. The hydrocarbon sample shall be taken at the exhaust side of the volume meter.

In the interest of reducing the amount of chart paper to be recorded and read and reducing the wear on pumps, and at the discretion of the ARB Executive Officer, the chart drive and pumps may be turned off whenever the sleeve sample concentration drops below 100 ppm. If this option is exercised by the test team, they must stand ready to resume operation of all sampling equipment immediately after the sample concentration climbs above 100 ppm. Also, the start and stop times for such periods during which the chart drive is off must be clearly marked on the chart record. See "ALTERNATIVE TEST PROCEDURES" section.

(1) **Volume Measurement**

Figure 11 illustrates equipment for volume measurements of samples from the nozzle

sleeve.

(2) **Concentration Measurement**

Figure 12 illustrates equipment for concentration measurements of samples from the nozzle sleeve.

8.1.1.4.1 Dispensing Episodes

The tester begins data collection for a dispensing episode with the insertion of the nozzle into the vehicle and continues until the end of the "response time" which is defined per EPA Method 21 as follows:

Introduce zero gas into the sleeve until the analyzer reading has stabilized, then switch quickly to the specified calibration gas (§ 6.1). Measure the time interval from switching to attainment of 90% of the final stable analyzer reading. Perform this test sequence three times, calculate the average, and define the result as the "response time."

The nozzle user is to dispense normally and terminate dispensing in the user's customary manner. The tester shall also instruct the user that upon deciding that termination is complete, the nozzle user shall so declare for the tester to hear.

To achieve this, and prior to nozzle insertion and for every dispensing episode, the tester shall provide simple, clear instructions to the nozzle user. The instructions shall be the same for each nozzle user.

After hearing that the user has terminated dispensing, the tester waits for the response time and then ends data collection for the dispensing episode.

The sleeve must always be at the fillpipe/nozzle interface for sample collection during any dispensing episode.

Sample at a nominal flow rate of 5 cfm, or less subject to the requirement that the sleeve leak check is less than 0.1% LEL (2,100 ppm as propane).

8.1.1.4.2 Idle Nozzle Episodes

An idle nozzle episode is any time other than a dispensing episode.

In the interest of improving the accuracy of idle nozzle data and reducing the wear on pumps, and at the discretion of the ARB Executive Officer, idle nozzle data may be taken from vehicles other than those in the required vehicle matrix for efficiency testing. Accuracy can be improved and pump wear reduced by avoiding the need to frequently change sample pump speed (to change from one dilution for the higher concentration dispensing sample to another dilution for the lower concentration idle nozzle sample). This option shall only be allowed if an adequately representative sample of vehicles is used for idle nozzle sampling. See **"ALTERNATIVE TEST PROCEDURES"** section.

Because idle nozzle emissions do not involve the nozzle/fillpipe interface, the determination of a vehicle matrix per TP-201.2A is not necessary.

(1) Idle Nozzle Screening Test Procedure

(a) Follow the instructions for the Leak Check of the Sleeve, but use the leak detector to determine if the nozzle is "leaking" idle nozzle emissions.

(i) Non-compliance is indicated by a reading at or above 2,100 ppm as propane (0.1% LEL).

(ii) Compliance is indicated when the procedures of EPA Method 21 have been followed and all readings are below 2,100 ppm as propane (0.1% LEL).

(b) Collect such data for up to twenty-five (25) idle nozzle episodes.

(i) If a non-complying episode occurs, proceed to the Idle Nozzle Sleeve Test Procedure below.

(ii) If only complying episodes occur for the first twenty-five (25) idle nozzle episodes, record a determination of compliance with the idle nozzle test requirement; indicate in the Certification Report that idle nozzle emissions were not detected.

(2) Idle Nozzle Sleeve Test Procedure

(a) Empirically determine, record, and employ a sample pump flow rate and analyzer range appropriate for any detectable idle nozzle emissions from the system.

(b) Using the procedures and calculations for Test Point 1, prepare to collect data in order to calculate results in units of pounds of hydrocarbon emitted per thousand gallons of fuel dispensed.

(3) Collect such data for twenty-five (25) idle nozzle episodes.

(a) If the overall result, in units of pounds of hydrocarbon emitted per thousand gallons of fuel dispensed, for all mass emitted divided by all fuel dispensed is over 0.42 pounds per thousand gallons (0.42 #/E3G), disapprove the application per CP-201 §2.2; the applicant must re-apply for further consideration of the system except as (4) below is applied.

(b) If the overall result is at or under 0.42 #/E3G, record the result for further calculations and proceed with the remainder of the required tests.

(4) At the applicants option, collect such data for seventy-five (75) more idle nozzle episodes; follow the instructions provided in step (3) (a) to obtain the overall result for all one hundred (100) data sets.

(a) If the overall result, in units of pounds of hydrocarbon emitted per thousand gallons of fuel dispensed, for all mass emitted divided by all fuel dispensed is over 0.42 pounds per thousand gallons (0.42 #/E3G), disapprove the application per CP-201 §2.2; the applicant must re-apply for further consideration of the system.

(b) If the overall result is at or under 0.42 #/E3G, record the result for further calculations and proceed with the remainder of the required tests.

8.1.2 Test Point 2 (Vapor Return)

Figure 13 emphasizes mass flux test locations for Test Point 2 (Vapor Return Line).

The vapor return line sample and temperature and pressure measurements must be taken from a sample manifold attached to the inlet of the volume meter which has been inserted at a break in the vapor return line. The break is usually at the vapor hose connection to the vapor riser from under the pavement. When options are available, the sampling location shall be the shortest practical downstream distance from the nozzle to minimize vapor condensation upstream of the sampling location. Unaltered sample shall be returned to the sample manifold.

8.1.2.1 Volume Measurement, General

Figure 14 generally illustrates equipment for volume measurements of samples from the vapor return line.

8.1.2.2 Volume Measurement, Single Vapor Return Line

Figure 15 specifically illustrates metering equipment for volume measurements of samples from a single vapor return line.

8.1.2.3 Volume Measurement, Manifolded Vapor Return Lines

Figure 16 specifically illustrates metering equipment for volume measurements of samples from the vapor return line.

8.1.2.4 Concentration Measurement

Figure 17 illustrates equipment for concentration measurements of samples from manifolded vapor return lines.

8.1.3 Test Point 3 (Vent and/or Assist Processor)

Figure 18 emphasizes mass flux test locations for Test Point 3 (Vent and/or Assist Processor).

Test point 3 shall always be at the outlet from the vent riser. The operation of test equipment shall not interfere with the normal operation of any valve or vent.

8.1.3.1 Single Vent Volume Measurement

Figure 19 illustrates equipment for volume measurements of samples from a single vent at Test Point 3.

8.1.3.2 Manifolded Vents Volume Measurement

Figure 20 specifically illustrates metering equipment for volume measurements of samples from manifolded vents at Test Point 3 .

8.3.1.3 Vent or Vents Concentration Measurement

Figure 21 illustrates equipment for concentration measurements of samples from a vent or vents.

8.1.4 Test Point 4 (Vapor Incinerator)

8.1.4.1 Incinerator Performance Specifications

Incinerator emissions shall be determined using the procedures of EPA M-2B, as outlined in this procedure, including any additional requirements provided below.

Any incinerator shall be evaluated and tested to establish:

(1) a performance specification for carbon monoxide (CO) emissions and

(2) performance specifications for other critical incinerator operating parameters per CP-201 § 3 which requires, in part:

The results of evaluation and testing of the system, documented in the certification test report, shall include:

(1) the identification of such critical system operating parameters,

(2) the performance specifications for such critical system operating parameters, and

(3) the specification of requirements for indicating gauges, detection devices, and alarms.

Challenge and failure mode testing shall be performed to establish system sensitivity to and performance specifications for the following variables:

(1) storage tank ullage at start of liquid transfer
(2) volume and volumetric rate of liquid transfer
(3) number of nozzles in simultaneous use and
(4) individual nozzle dispensing rates.

Compliance with the incinerator performance specifications shall be determined per CP-201, as applicable.

8.1.4.2 Incinerator Sampling Parameters

A preliminary evaluation of incinerator operation shall be conducted to determine data collection intervals for time and parameter magnitude for each parameter. Such intervals shall be chosen to provide calculated estimates of incinerator mass emissions factors which differ by no more than ± 10% from actual, based on engineering judgment.

Data for each parameter shall be collected on such intervals.

Collect and record incinerator data for all of the parameters required to make a determination per EPA M-2B, with additional requirements for auxiliary fuel to expand the applicability of EPA M-2B:

V_{in} = total inlet volume entering vapor incinerator (SCF)

$V_{facility}$ = inlet volume from the facility vapor space (SCF)

V_{fuel} = inlet volume of auxiliary fuel (SCF)

V_{out} = vapor incinerator outlet volume (SCF)

N = number of carbon atoms in each molecule of calibration gas

$[HC]_{facility}$ = hydrocarbon concentration of inlet volume from the facility vapor space (volume fraction)

$[HC]_{fuel}$ = hydrocarbon concentration of auxiliary fuel (volume fraction)

$[HC]_{out}$ = vapor incinerator outlet hydrocarbon concentration (ppm)

$[CO_2]$ = vapor incinerator outlet carbon dioxide concentration (ppm)

[CO] = vapor incinerator outlet carbon monoxide concentration (ppm)

Based on an engineering evaluation of a subject incinerator, the ARB Executive Officer may allow simplifying assumptions to be used in place of actual data collection. For example, for auxiliary fuel, it is often possible to use data from the fuel supplier.

8.1.4.3 Incinerator Visual Inspection

Visual Inspection. Any visible emissions except for steam, from vapor incinerators are an indication of poor combustion. An incinerator shall not emit air contaminants (not including moisture) in such a manner that the opacity of the emission is greater than 10 percent for a period or periods aggregating more than one minute in any 60 consecutive minutes; or greater than 40 percent opacity at any time. Should such visible emissions from the exhaust be detected, the control system is unacceptable and the problem must be corrected and an application made to the ARB Executive Officer for reconsideration for certification.

8.1.4.4 Incinerator Exhaust Sample Location

The vapor incinerator exhaust sample must be taken from the exhaust stack down-stream of the burner far enough to permit complete mixing of the combustion gases. For most sources, this point is at least eight stack diameters downstream of any interference and two diameters upstream of the stack exit. There are many cases where these conditions cannot be met. The sample point shall be no less than one stack diameter from the stack exit and one stack diameter above the high point of the flame and be at a point of maximum velocity head. Vapor incinerator emissions shall be monitored for a 24 hour period beginning at the time of the first dispensing period.

8.1.4.5 Incinerator Inlet Sample Location

The vapor incinerator inlet sample and temperature and pressure measurements must be taken from a sample manifold attached to the inlet side of the volume meter which has been inserted at a break in the inlet line. The installation of test equipment shall not interfere with the normal operation of the vapor incinerator. Unaltered sample shall be returned to the sample manifold.

8.2 General Sampling Parameters

The test team shall collect and record frequent periodic or continuous measurements of the following sample gas variables shown in hexagon outlines in Figure 1:

HC = Hydrocarbon Concentration

CO = Carbon Monoxide Concentration

CO_2 = Carbon Dioxide Concentration

V = Volume

P = Pressure

T = Temperature

8.3 Other Sampling Parameters

Test Point 1 (Nozzle Sleeve)

Dispensed Fuel Vapor Pressure

Dispensed Fuel Volume

Test Point 2 (Vapor Return)

Dynamic Back-Pressure as Found

Test Point 3 (Vent or Vapor Processor)

Valve Cracking Pressure

Phase I Delivery Descriptions

Test Point 4 (Vapor Incinerator)

Design Operating Parameters

Actual Operating Parameters

9 QUALITY ASSURANCE / QUALITY CONTROL (QA/QC)

9.1 Analyzers

Perform a comprehensive calibration in the laboratory every six months. Check the analyzer with several known concentrations of calibration from reference cylinders to determine linearity.

9.2 Calibration Gases

Calibration gases are classified into three types:

(1) **Standard Reference Materials**

These are primary standards to which all other standards shall be traceable. For any substance for which no standard reference material is obtainable, a calibration gas of the highest level of accuracy and precision obtainable shall qualify as a standard reference material, subject to approval by the ARB Executive Officer.

A standard reference material, which normally is kept at a main laboratory, qualifies as an intermediate standard and as a working standard, too.

(2) **Intermediate Standards**

These are secondary standards which shall be assayed versus the corresponding NIST-SRM once

every six months with a concentration difference which is no more than one percent of the results for the NIST-SRM. An intermediate standard container which does not meet its assay requirement shall be taken out of service. To re-enter service, the intermediate standard container shall be recharged and meet its assay requirement.

An intermediate standard, which normally is kept at a branch laboratory or a shop, qualifies as a working standard, too.

(3) **Working Standards**

These are tertiary standards which shall be assayed versus the corresponding intermediate standard before every test with a concentration difference which is no more than one percent of the results for the intermediate standard. A working standard container which does not meet its assay requirement shall be taken out of service. To re-enter service, the working standard container shall be recharged and meet its assay requirement.

A working standard normally serves for field calibration and testing.

A "Certificate of Analysis" from the gas supplier can be submitted in the Certification Test Report as evidence of compliance with the specifications above; regardless of such certificate, the tester is ultimately responsible for satisfying the requirements given above in the event that a certificate is contradicted by subsequent analysis of the contents of a certified gas container.

All calibrations shall be performed with a calibration gas of at least working standard quality. Any cylinder is to be recharged or taken out of service when the cylinder pressure drops to 10 percent of the original pressure.

Information on calibration gas containers shall be entered into a permanent log identifying each container by serial number. Sufficient information shall be maintained to allow a determination of the compliance status of each calibration gas per these requirements; such information shall include for each container, but not be limited to each:

(1) date put in service,
(2) assay result, and
(3) date taken out of service.

9.3 Volume Meters

Standard methods and equipment shall be used to calibrate the meters on an annual basis. The calibration curves are to be traceable to NIST standards.

10 RECORDING DATA

(1) **Chain of Custody**

Written data records must be kept during testing and kept by chain of custody.

(2) **Necessary and Sufficient Data**

Written data records must contain all information used to calculate and report final results.

(3) **Reconciliation of Reported Results to Recorded Data**

The final results must be verifiable by recalculation from the written data records.

(4) **Permanent Records**

These written data records must be kept permanently filed and available for use by the Executive Officer of the Air Resources Board when requested.

11 CALCULATING RESULTS

Note: In addition to other required calculations, vapor recovery system test results shall be calculated in units of pounds of hydrocarbon emitted per thousand gallons of fuel transferred for any results which are expressible in such units.

Calculate all efficiency results to the nearest 0.1%.

11.1 General Nomenclature

Figure 1 illustrates some parameters specified in the calculations.

11.1.1 Parameters

General parameters are listed below, other parameters are defined in the calculations or alternative procedures:

[HC] = hydrocarbon concentration (volume fraction),

V_m = measured volume of gases and vapors,

P = pressure, and

T = temperature.

For any dispensing episode:

D = volume of liquid dispensed, and

Δt = elapsed time of dispensing.

11.1.2 Subscripts

Subscripts shall be used to distinguish parameters and modes of measurement, e.g.:

$P_{(s,e,t)}$ = value of parameter "P" for subinterval "s" of dispensing episode "e" at test point "t".

Any or all of these subscripts may modify a parameter, and for consistency, subscripts will appear in the order given above, e.g.:

$P_{(e,t)}$ = value of parameter "P" for dispensing episode "e" at test point "t"; and

P_t = value of parameter "P" for an entire test at test point "t".

11.2 Standardization and Calibration of Parameters

11.2.1 Volume Standardization

Directly measured volumes (such as those directly measured for Test Points 1, 2, and 3) shall be standardized as follows:

$$V = V_m \left(\frac{528}{T} \right) \left(\frac{P_b + \left(\frac{P}{13.6} \right)}{29.92} \right)$$

where:

V = volume corrected to standard conditions (ft^3).

V_m = measured volume (ft^3).

P_b = barometric pressure (in. Hg).

P = differential pressure in sample line (in. water gauge).

T = temperature of gas stream (^oR).

11.2.2 Concentration

Each measured concentration of gas and vapor shall be corrected for any analyzer zero and/or span drifts and shall be expressed as a volume fraction (i.e. % or ppm).

11.2.3 Mass

Masses shall be calculated from calibration data and measurements as follows:

$$m = \left(\frac{MW}{385}\right) \times [HC] \times V$$

where:

m = mass (lb)

MW = molecular weight of calibration gas (lb/lb-mole)

385 = standard volume of one lb-mole at 528°R and 29.92 in. Hg

Note for manual data reduction: In general, $[HC]_{(e,t)}$ will stabilize to a steady value during a dispensing interval. If this is not the case, break $V_{(e,t)}$ into "s" subintervals and calculate:

$$m_{(e,t)} = \left(\frac{MW}{385}\right) \times \sum_{1}^{s} \left([HC]_{(s,e,t)} \times V_{(s,e,t)}\right)$$

11.3 Volume Calculations

11.3.1 Volume for Test Point 1 (Nozzle Sleeve)

This volume is directly measured and shall be standardized per § 11.2.1.

11.3.2 Volume for Test Point 2 (Vapor Return Line)

This volume is directly measured and shall be standardized per § 11.2.1.

11.3.3 Volume for Test Point 3 (Vent and/or Assist Processor)

This volume is directly measured and shall be standardized per § 11.2.1.

11.3.4 Volume for Test Point 4 (Incinerator)

Note the possibility for simplifying assumptions described in § 8.1.4.2.

11.3.4.1 Preliminary Incinerator Outlet Volume Calculations

Before calculating the vapor incinerator outlet volume, calculate the following preliminary values:

(1) **inlet volume from the facility vapor space**

Any inlet volume from the facility vapor space entering the vapor incinerator is directly measured and shall be standardized per § 11.2.1.

(2) **inlet volume of auxiliary fuel**

Any inlet volume from auxiliary fuel entering the vapor incinerator is directly measured and shall be standardized per § 11.2.1.

(3) **total inlet volume entering vapor incinerator**

$$V_{in} = V_{facility} + V_{fuel}$$

where:

V_{in} = total inlet volume entering vapor incinerator (SCF)

$V_{facility}$ = inlet volume from the facility vapor space (SCF)

V_{fuel} = inlet volume of auxiliary fuel (SCF)

(4) **inlet hydrocarbon concentration**

$$[HC]_{in} = \frac{(N\ [HC]_{facility}\ V_{facility}) + (N\ [HC]_{fuel}\ V_{fuel})}{V_{in}}$$

where:

$[HC]_{in}$ = inlet hydrocarbon concentration entering vapor incinerator (ppm)

N = number of carbon atoms in each molecule of calibration gas

$[HC]_{facility}$ = hydrocarbon concentration of inlet volume from the facility vapor space (volume fraction)

$[HC]_{fuel}$ = hydrocarbon concentration of auxiliary fuel (volume fraction)

11.3.4.2 Final Incinerator Outlet Volume Calculations

Calculate any vapor incinerator outlet volume using the following equation:

$$V_{out} = V_{in} \left(\frac{[HC]_{in}}{N\ [HC]_{out} + [CO_2] + [CO] - 300} \right)$$

where:

V_{out} = vapor incinerator outlet volume (SCF)

N = number of carbon atoms in each molecule of calibration gas

$[HC]_{out}$ = vapor incinerator outlet hydrocarbon concentration (ppm)

$[CO_2]$ = vapor incinerator outlet carbon dioxide concentration (ppm)

[CO] = vapor incinerator outlet carbon monoxide concentration (ppm)

300 = assumed background concentration (ppm) of CO_2

11.4 Calculations of Emissions During Idle Nozzle Episodes

To evaluate the possibility of a system eventually meeting the efficiency performance standard, these calculations must be completed before the Dispensing Facility Vent Calculations, the Individual Dispensing Episode Calculations, and the ultimate Efficiency Test Result Calculation.

Idle nozzle emissions of HC at a dispensing facility must be apportioned to each dispensing episode on a proportional basis of dispensed volume.

11.4.1 Total Idle Nozzle Emissions

Total idle nozzle emissions for all idle nozzle episodes:

m_1 = HC mass through mass flux area 1 (idle nozzle)

If the ARB Executive Officer determines that a portion of m1 is due to Phase I activity, then m1 may be diminished by that portion.

11.4.2 Apportioned Idle Nozzle Emissions

For any D_e:

$f(D_e,m_1)$ = the fraction of idle nozzle emissions assigned to each dispensing episode on a proportional basis of dispensed volume.

$$= \frac{(\text{liquid volume dispensed})_i}{(\text{all liquid volume dispensed during flux of } m_1)}$$

$$m_{(e,1)} = m_1 \times f(D_e,m_1)$$

11.5 Dispensing Facility Vent Calculations

To evaluate the possibility of a system eventually meeting the efficiency performance standard, these calculations must be completed before the Individual Dispensing Episode Calculations and the ultimate Efficiency Test Result Calculation.

Vent emissions of HC at a dispensing facility must be apportioned to each dispensing episode on a proportional basis of dispensed volume.

11.5.1 Total Vent Emissions

Total vent emissions for all dispensing episodes:

m_3 = HC mass through mass flux area 3 (vent)

If the ARB Executive Officer determines that a portion of m_3 is due to Phase I activity, then m_3 may be diminished by that portion.

11.5.2 Apportioned Vent Emissions

For any D_e:

$f(D_e,m_3)$ = the fraction of vent emissions assigned to each dispensing episode on a proportional basis of dispensed volume.

$$= \frac{(\text{liquid volume dispensed})_i}{(\text{all liquid volume dispensed during flux of } m_3)}$$

$$m(_{e,3}) = m_3 \times f(D_e,m_3)$$

11.6 Individual Dispensing Episode Calculations

Processor and incinerator emissions of HC at a dispensing facility must be apportioned to each dispensing episode on a proportional basis of dispensed volume. Use the same apportionment algorithm as for the vent emissions above.

The term "dispensing episode" is used here to generalize the applicability of these procedures.

Unless otherwise specified by the certification process, a dispensing episode starts with the removal of a nozzle from a dispenser and ends with the start of the next dispensing episode when the nozzle is removed again.

It is assumed that dispensing is into a vehicle fuel tank with a fillpipe test point and a vapor return line test point, but these calculations also apply to, for example, dispensing into surrogate tanks such as 55 gallon drums.

11.6.1 Mass through a Given Test Point

For any dispensing episode:

$m_{(e,t)}$ = HC mass through a given test point

11.6.2 Individual Dispensing Episode Calculations

Each dispensing episode efficiency, E_e, is calculated from the $m_{(e,t)}$:

$$E_e = \frac{m_{(e,2)} - [m_{(e,3)} + m_{(e,4)}]}{[m_{(e,2)} + m_{(e,1)}]} \times 100\%$$

where:

$m_{(e,1)}$ = the mass flux through openings at the dispensing interface,

$m_{(e,2)}$ = the mass flux through the vapor return line;

$m_{(e,3)}$ = the mass flux through the vent and/or the assist processor; and

$m_{(e,4)}$ = the mass flux through the vapor incinerator.

11.7 Efficiency Test Result Calculation

For the tested vapor recovery equipment, the efficiency test result, E, for this procedure is:

$$E = \sum_{1}^{n} \left(\frac{E_e}{n} \right)$$

where "n" is the number of dispensing episodes.

12 REPORTING RESULTS

Note: In addition to other required results, vapor recovery system test results shall be reported in units of pounds of hydrocarbon emitted per thousand gallons of fuel transferred for any results which are expressible in such units.

The following are required by § 10 RECORDING DATA:

(1) **Chain of Custody**

(2) **Necessary and Sufficient Data**

(3) **Reconciliation of Reported Results to Recorded Data**

(4) **Permanent Records**

Example report forms are provided in Forms 1 through 4 for generating written documents to meet these requirements. Other formats can be used; however, no test report shall be accepted or approved unless it contains at least the information specified in these forms.

All such forms must be written and submitted on acceptable media as specified by the the ARB Executive Officer on a case-by-case basis for each report.

In cases of conflict between hard copy and soft copy documents, the hard copy shall be presumed correct, unless a different determination is made by the ARB Executive Officer in special circumstances, which must be documented, in hard copy and soft copy, to the satisfaction of the ARB Executive Officer.

13 ALTERNATIVE TEST PROCEDURES

13.1 General Alternative Test Procedures

Test procedures, other than specified above, shall only be used if prior written approval is obtained from the ARB Executive Officer. In order to secure the ARB Executive Officer's approval of an alternative test procedure, the applicant is responsible for demonstrating to the ARB Executive Officer's satisfaction that the alternative test procedure is equivalent to this test procedure.

(1) Such approval shall be granted on a case-by-case basis only. Because of the evolving nature of technology and procedures for vapor recovery systems, such approval shall not be granted in subsequent cases without a new request for approval and a new demonstration of equivalency.

(2) Documentation of any such approvals, demonstrations, and approvals shall be maintained in the ARB Executive Officer's files and shall be made available upon request.

13.2 Test Procedures for Determining Incinerator Emissions

Incinerator emissions shall be determined using the procedures of EPA M-2B with the additional requirements provided in TP-205.2.

14 REFERENCES

This section is reserved for future specification.

15 EXAMPLE FIGURES AND FORMS

15.1 Figures

Each figure provides an illustration of an implementation which conforms to the requirements of this test procedure; other implementations which so conform are acceptable, too. Any specifications or dimensions provided in the figures are for example only, unless such specifications or dimensions are provided as requirements in the text of this or some other required test procedure.

Figure 1
Test Locations

Figure 2
Test Point 1 (Nozzle Sleeve)

Figure 3
Vehicle Leak Check Procedure (Nitrogen Pressurization)

Figure 4
Vehicle Leak Check Procedure: (Manual Compression)

Figure 5
Vehicle Leak Check Procedure: (Manual De-Compression)

Figure 6
Nozzle Sleeve Assembly: (Sectional View of Sleeve)

Figure 7
Nozzle Sleeve Assembly: (Axial View of Sleeve)

Figure 8
Nozzle Sleeve Assembly: (View of Sleeve on Nozzle)

Figure 9
Leak Check of Sleeve: (View of Combustible Gas Detector)

Figure 10
Leak Check of Sleeve: (View of Combustible Gas Detector in Use)

Figure 11
Nozzle Sleeve Measurements: (Volume Measurement)

Figure 12
Nozzle Sleeve Measurements: (Concentration Measurement)

Figure 13
Test Point 2 (Vapor Return Line)

Figure 14
Vapor Return Line (Volume Measurement, General)

Figure 15
Vapor Return Line (Volume Measurement, Single Vapor Return Line)

Figure 16
Vapor Return Line (Volume Measurement, Manifolded Vapor Return Lines)

Figure 17
Vapor Return Line (Concentration Measurement)

Figure 18
Test Point 3 (Vent and/or Assist Processor)

Figure 19
Single Vent (Volume Measurement)

Figure 20
Manifolded Vents (Volume Measurement)

Figure 21
Vent or Vents (Concentration Measurement)

15.2 Forms

Each form provides an illustration of an implementation which conforms to the requirements of this test procedure; other implementations which so conform are acceptable, too. Any specifications or dimensions provided in the forms are for example only, unless such specifications or dimensions are provided as requirements in the text of this or some other required test procedure.

Form 1
Chain of Custody

Form 2
Data

Form 3

Results

Form 4
Permanent Records

FIGURE 1
Test Locations

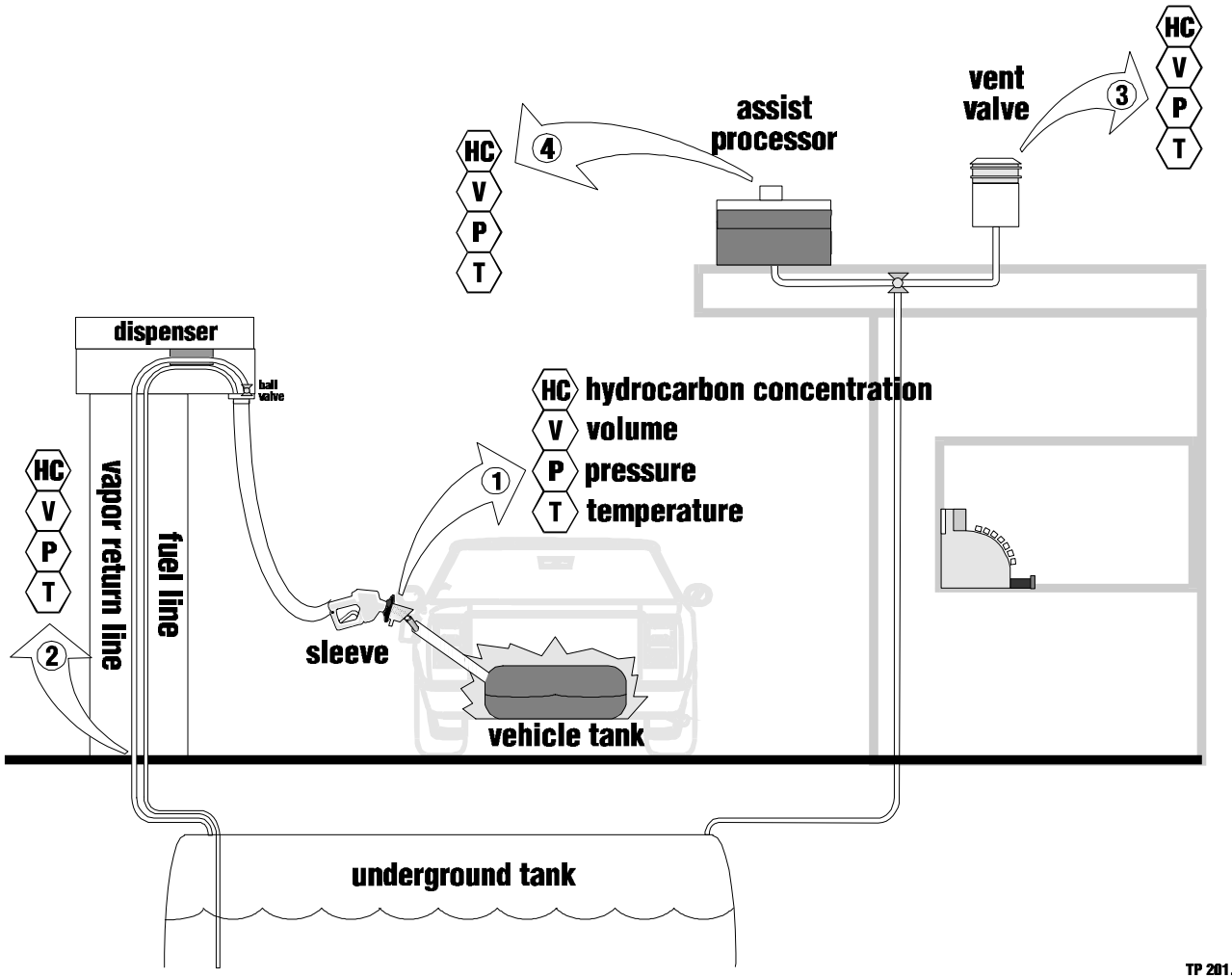

TP 201.2 F.1/ B. CORDOVA '95

FIGURE 2
Test Point 1 (Nozzle Sleeve)

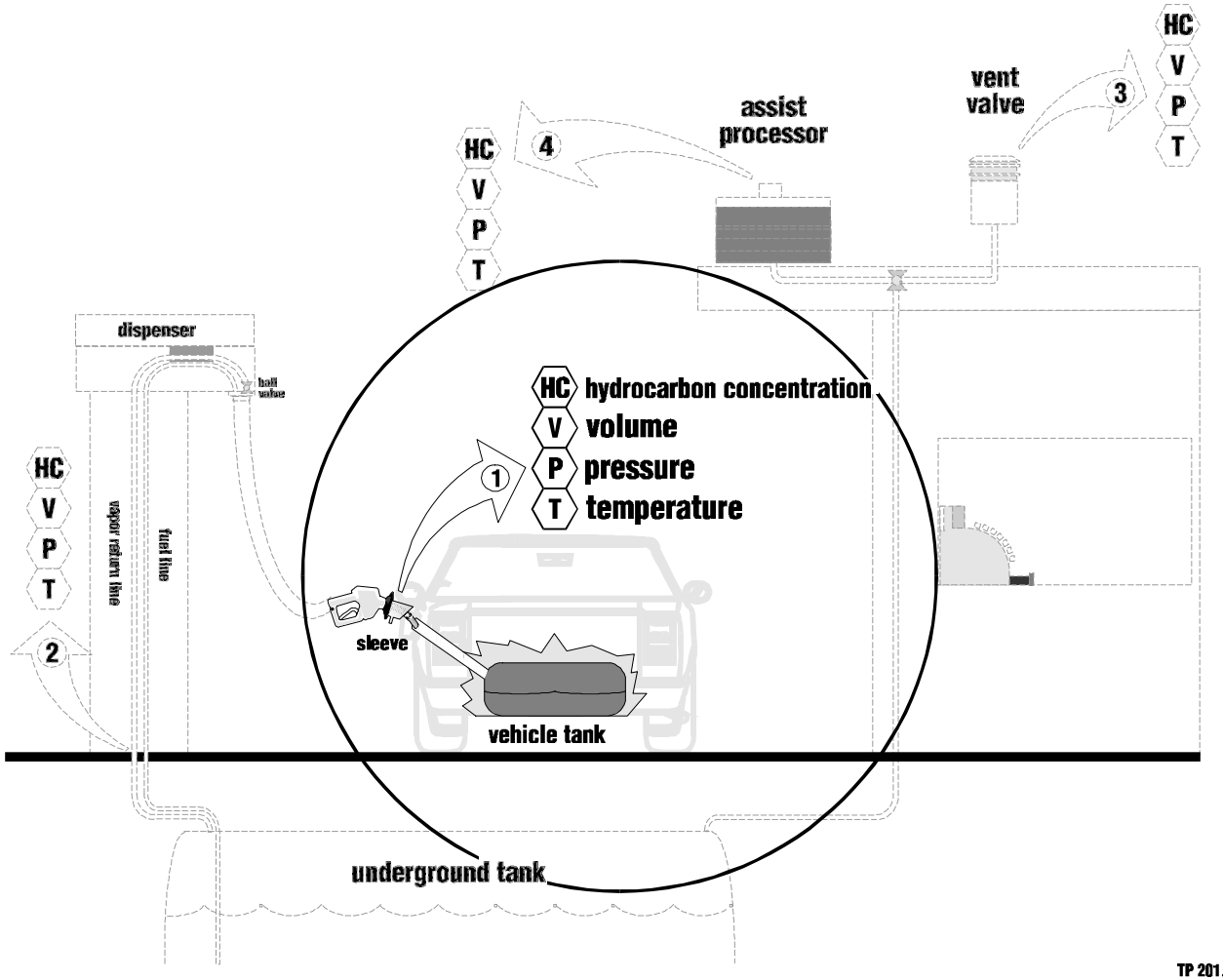

TP 201.2 F.2/ B. CORDOVA '95

FIGURE 3
Vehicle Leak Check Procedure (Nitrogen Pressurization)

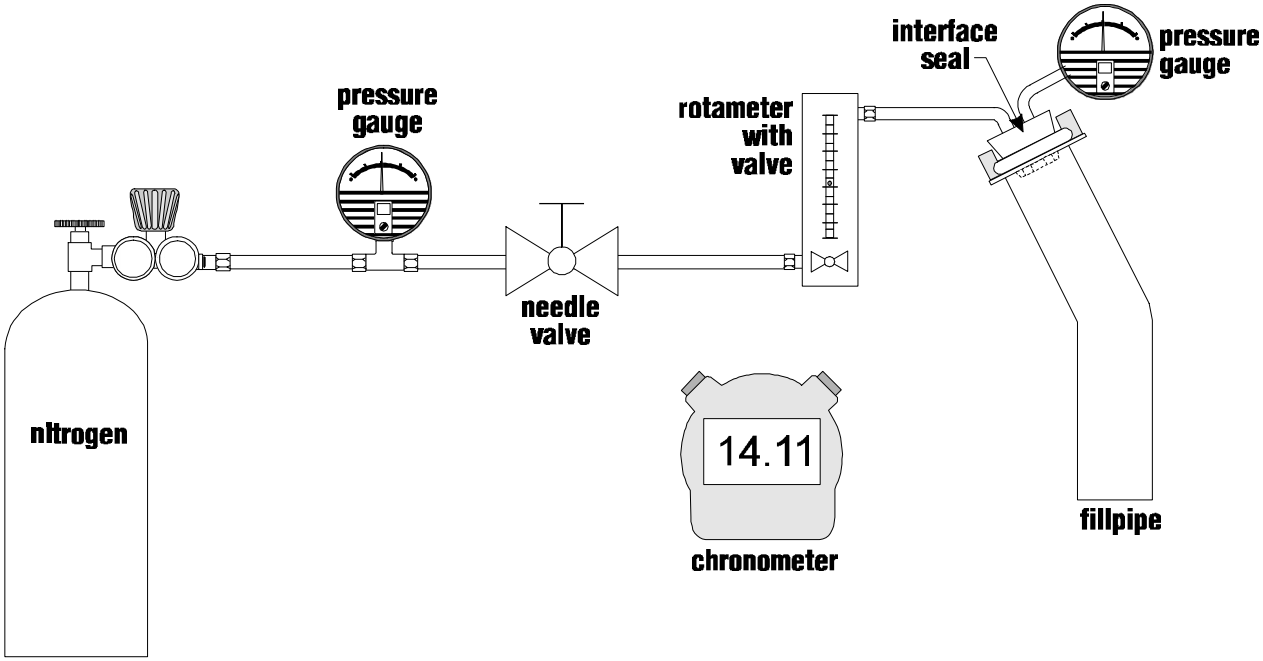

TP 201.2 F.3/ B. CORDOVA '95

FIGURE 4
Vehicle Leak Check Procedure
(Manual Compression)

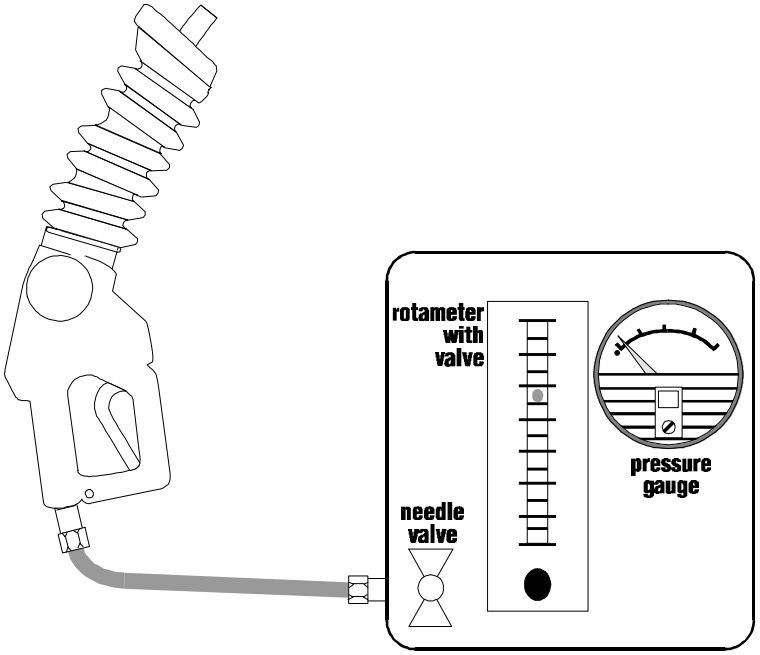

TP 201.2 E4/ B. CORDOVA '95

FIGURE 5
Vehicle Leak Check Procedure
(Manual De-Compression)

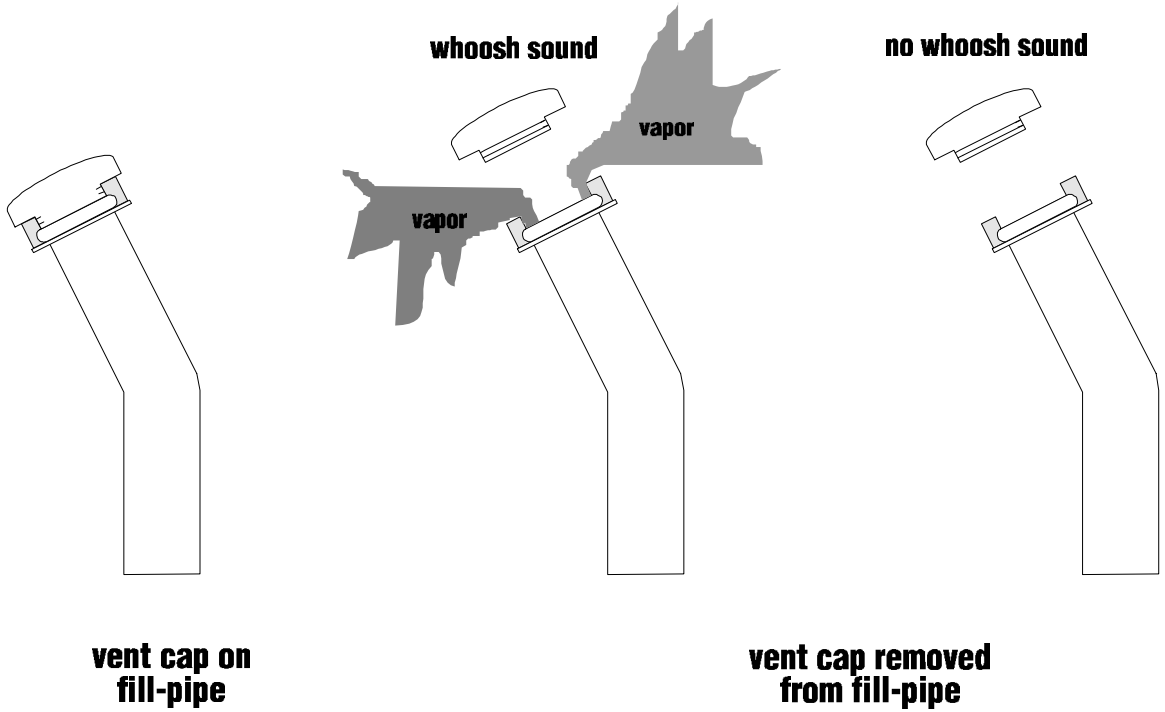

TP 201.2 F.5/ B. CORDOVA '95

FIGURE 6
Nozzle Sleeve Assembly (Sectional View of Sleeve)

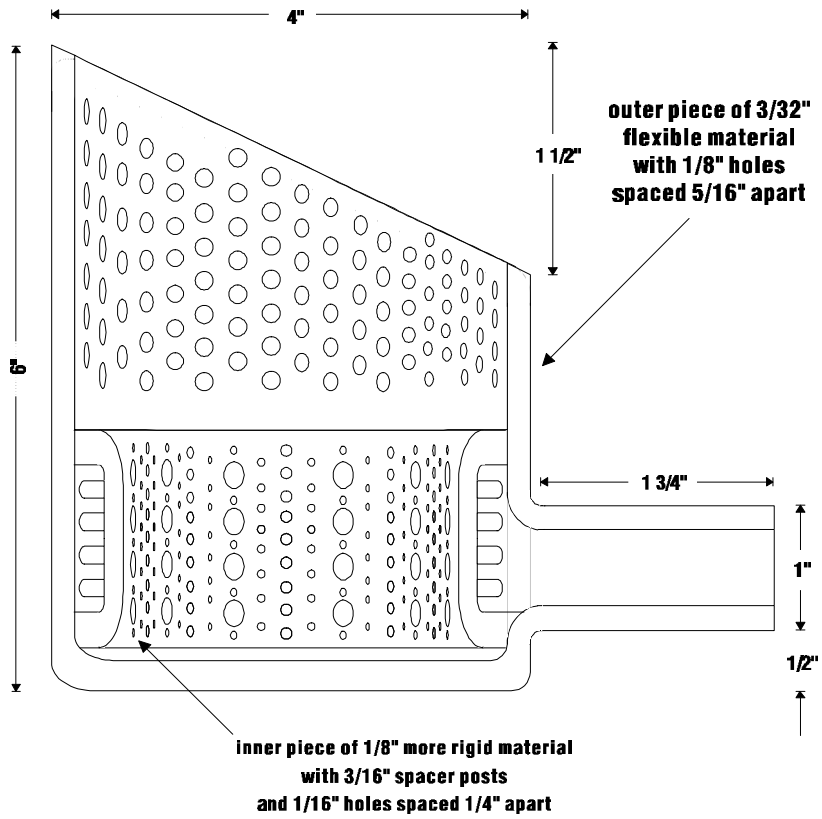

these dimensions are for example, and are not specifications

TP 201.2 F6/ R. CORDOVA '95

FIGURE 7
Nozzle Sleeve Assembly (Axial View of Sleeve)

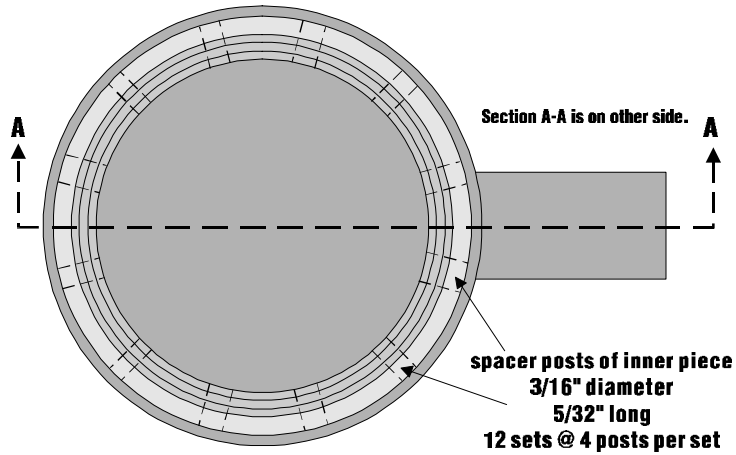

Materials must be resistant to breakdown by fuels and additives and easily bonded and repaired.

TP 201.2 E7/ B. CORDOVA '95

FIGURE 8
Nozzle Sleeve Assembly (View of Sleeve on Nozzle)

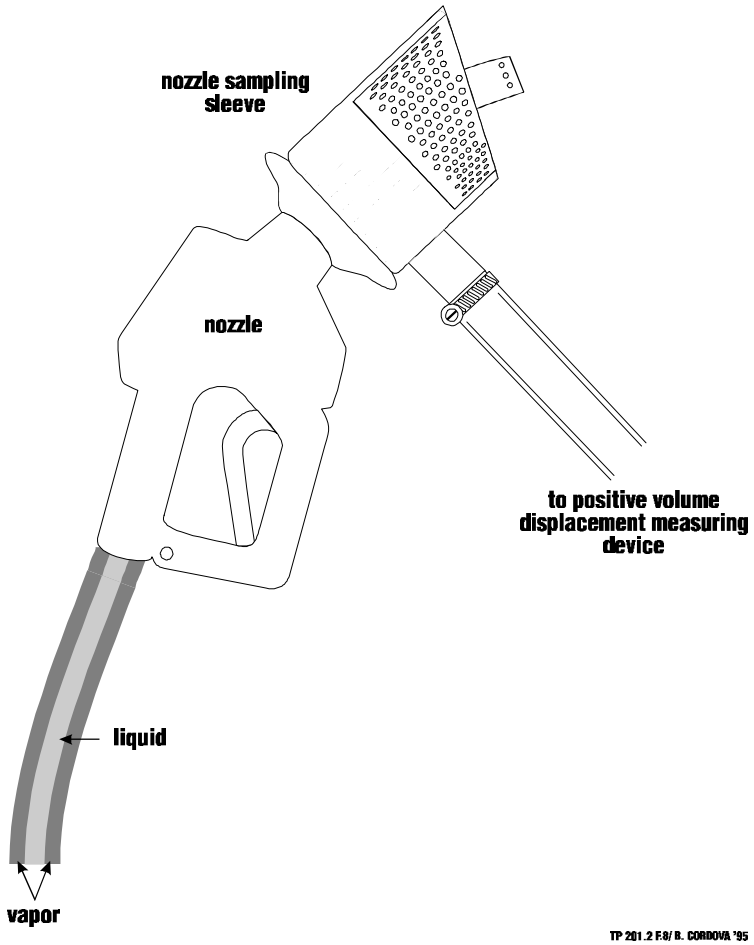

FIGURE 9
Leak Check of Sleeve (View of Combustible Gas Detector)

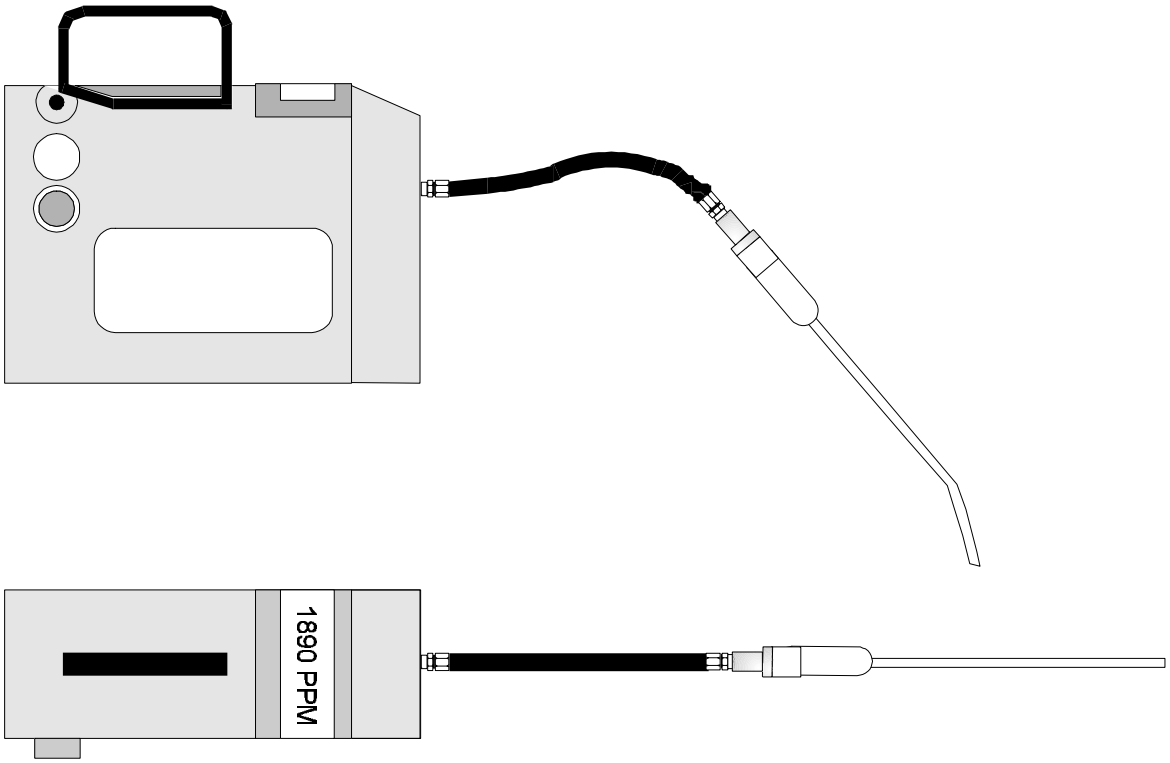

TP 201.2 F.9/ B. CORDOVA '95

FIGURE 10
Leak Check of Sleeve (Combustible gas detector in Use)

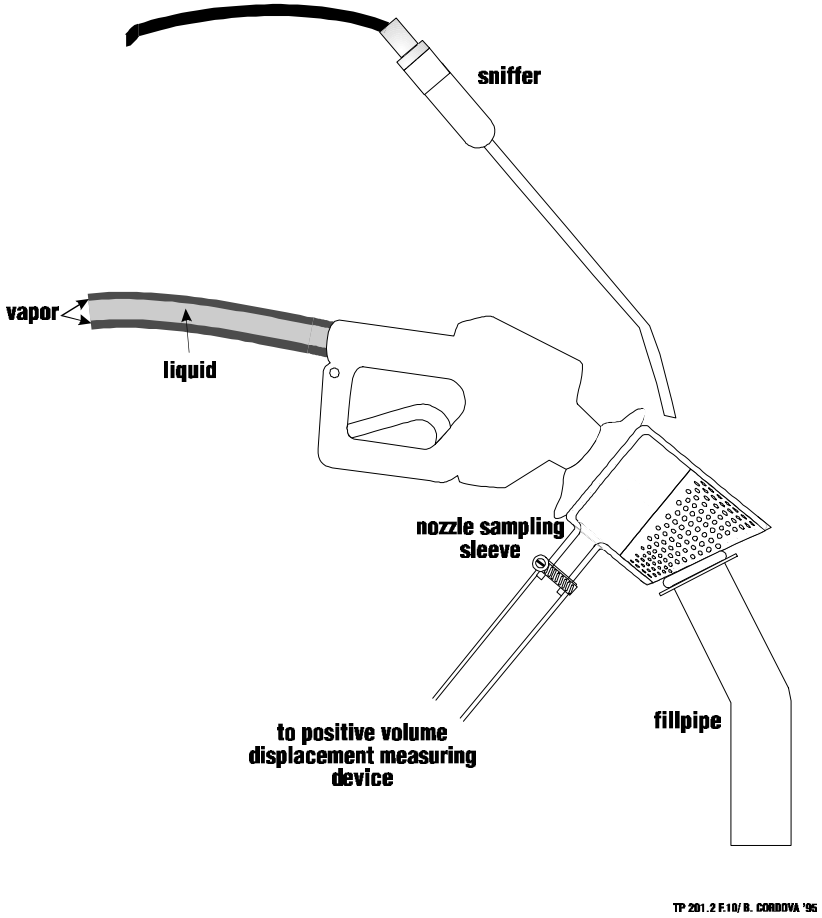

FIGURE 11
Nozzle Sleeve Measurement (Volume Measurement)

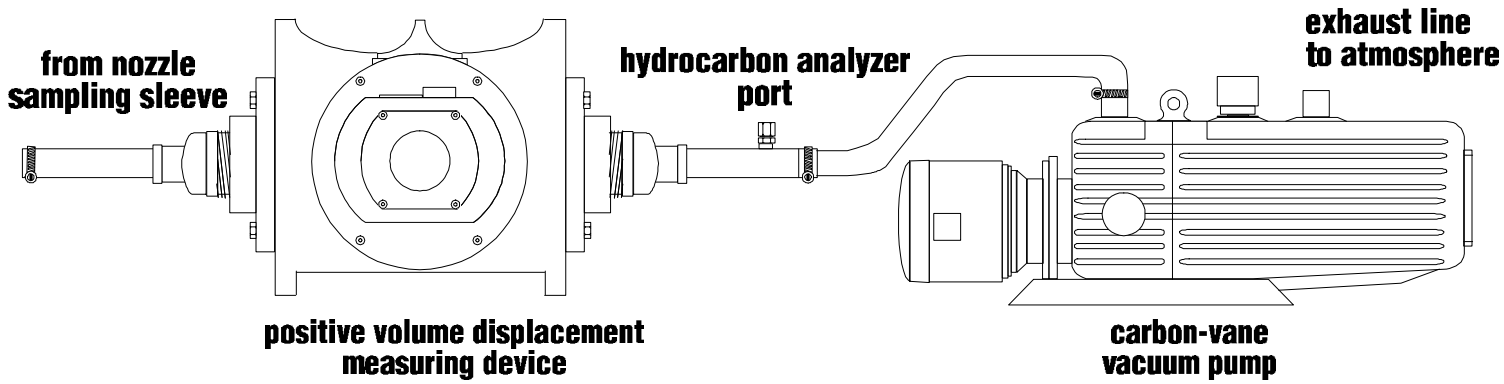

TP 201.2 F.11/ B. CORDOVA '95

FIGURE 12
Nozzle Sleeve Measurements (Concentration Measurements)

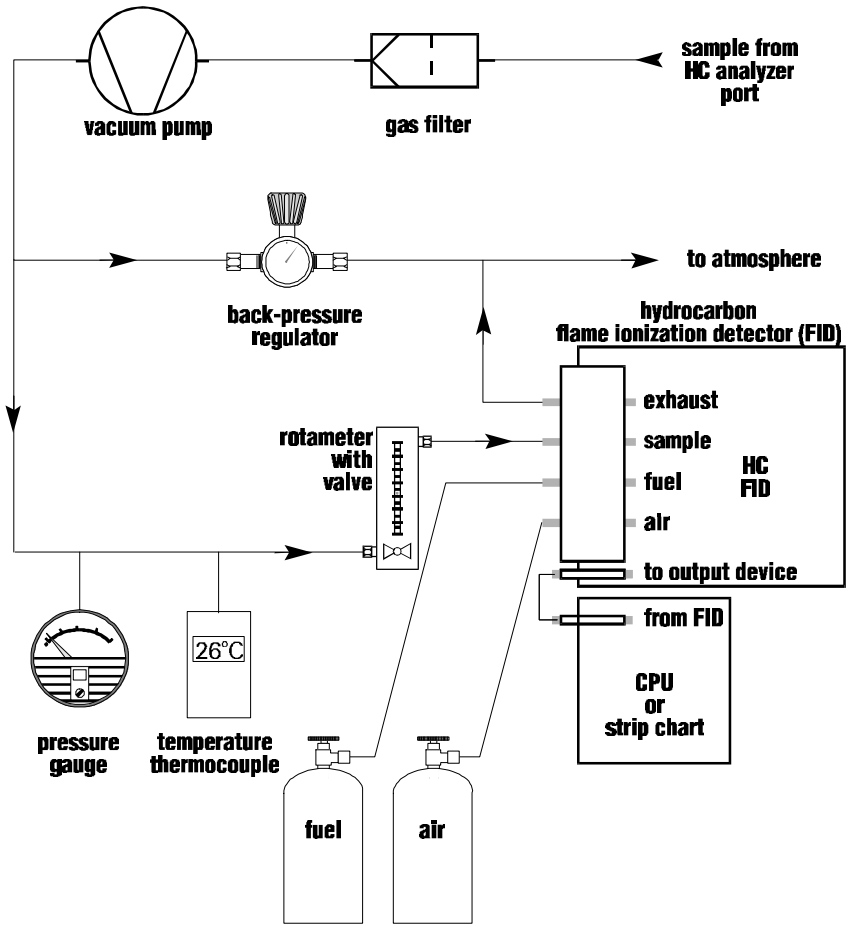

TP 201.2 F12/ B. CORDOVA '95

FIGURE 13
Test Point 2 (Vapor Return Line)

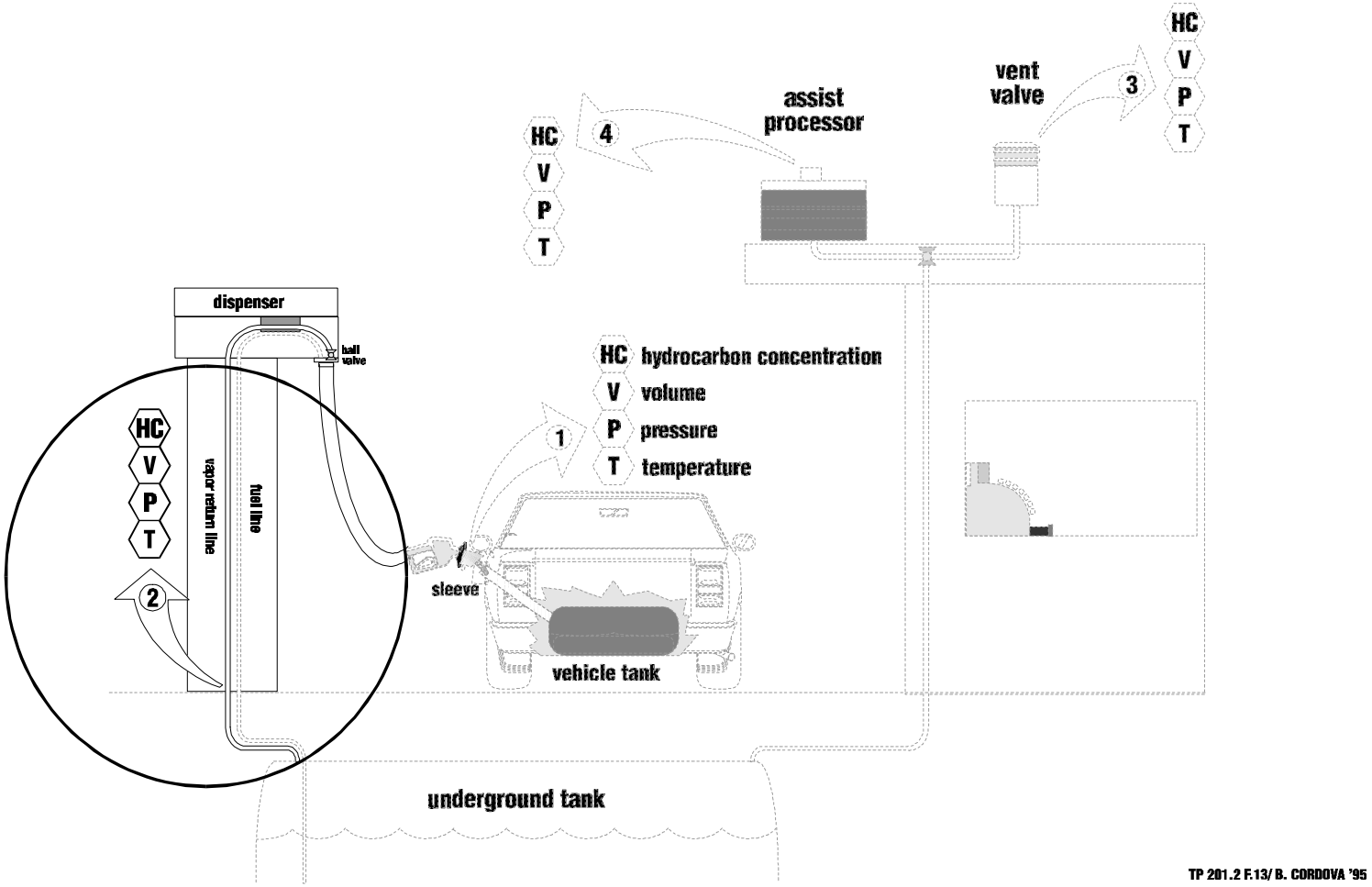

FIGURE 14
Vapor Return Line (Volume Measurement, General)

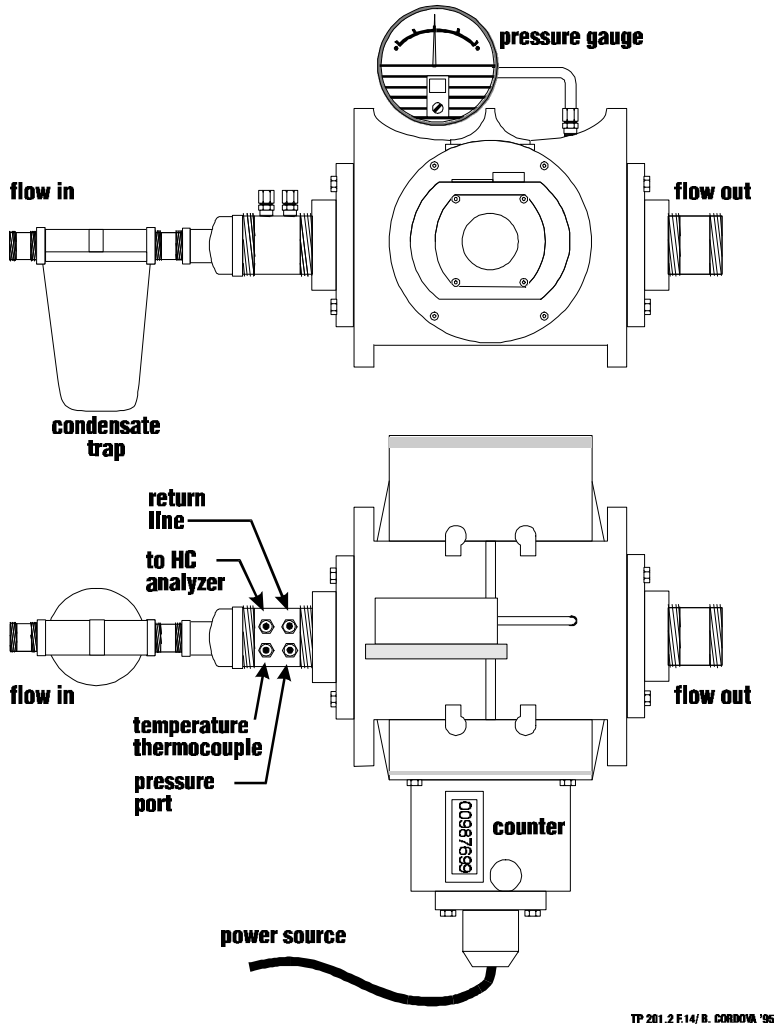

FIGURE 15
Vapor Return Line
(Volume Measurement, Single Vapor Return Line)

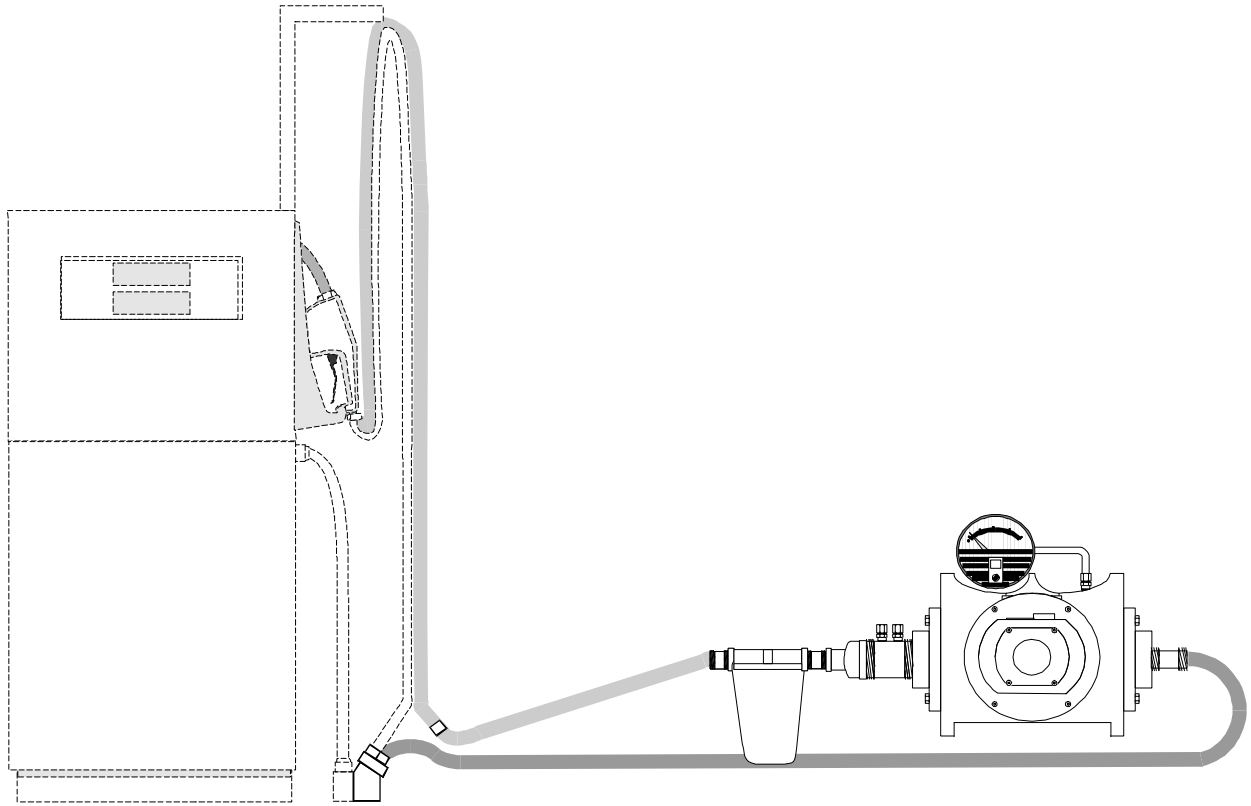

TP 201.2 F.15/ B. CORDOVA '95

FIGURE 16
Vapor Return Line
(Volume Measurement, Manifolded Vapor Return Lines)

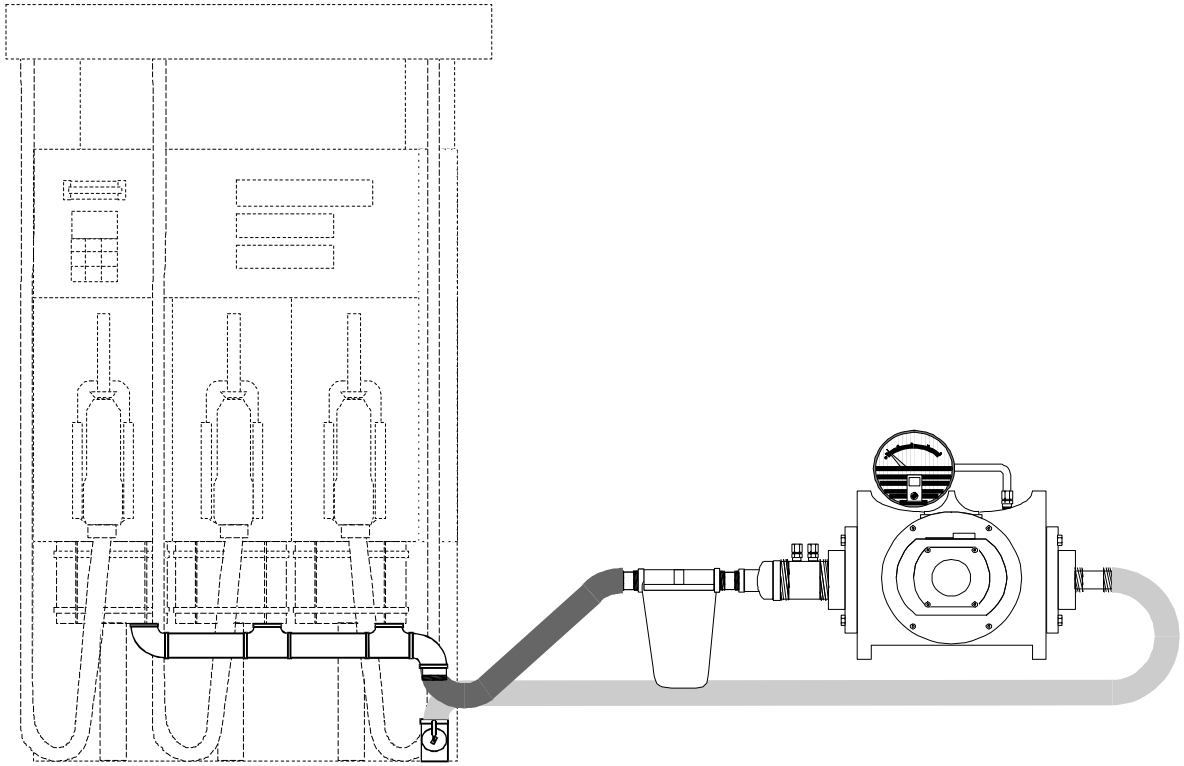

TP 201.2 F.16/ B. CORDOVA '95

FIGURE 17
Vapor Return Line (Concentration Measurement)

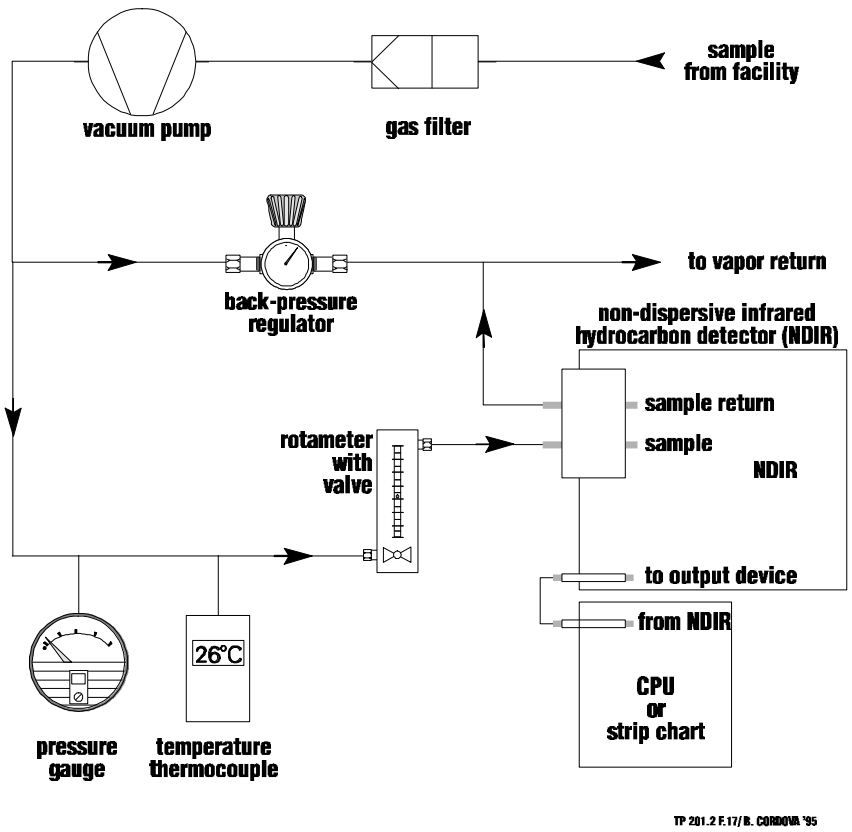

FIGURE 18
Test Point 3 (Vent and/ or Assist Processor)

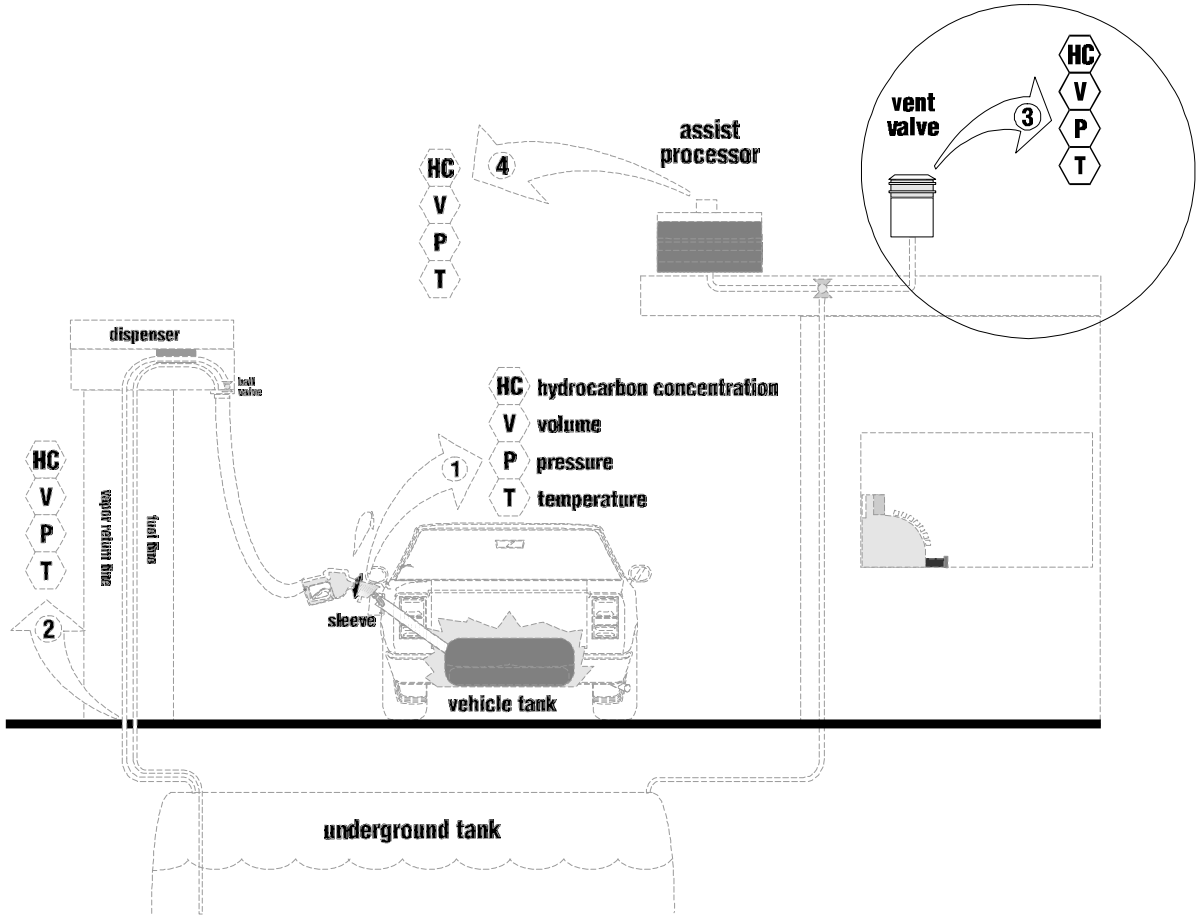

TP 201.2 F18/ B. CORDOVA '95

FIGURE 19
Single Vent (Volume Measurement)

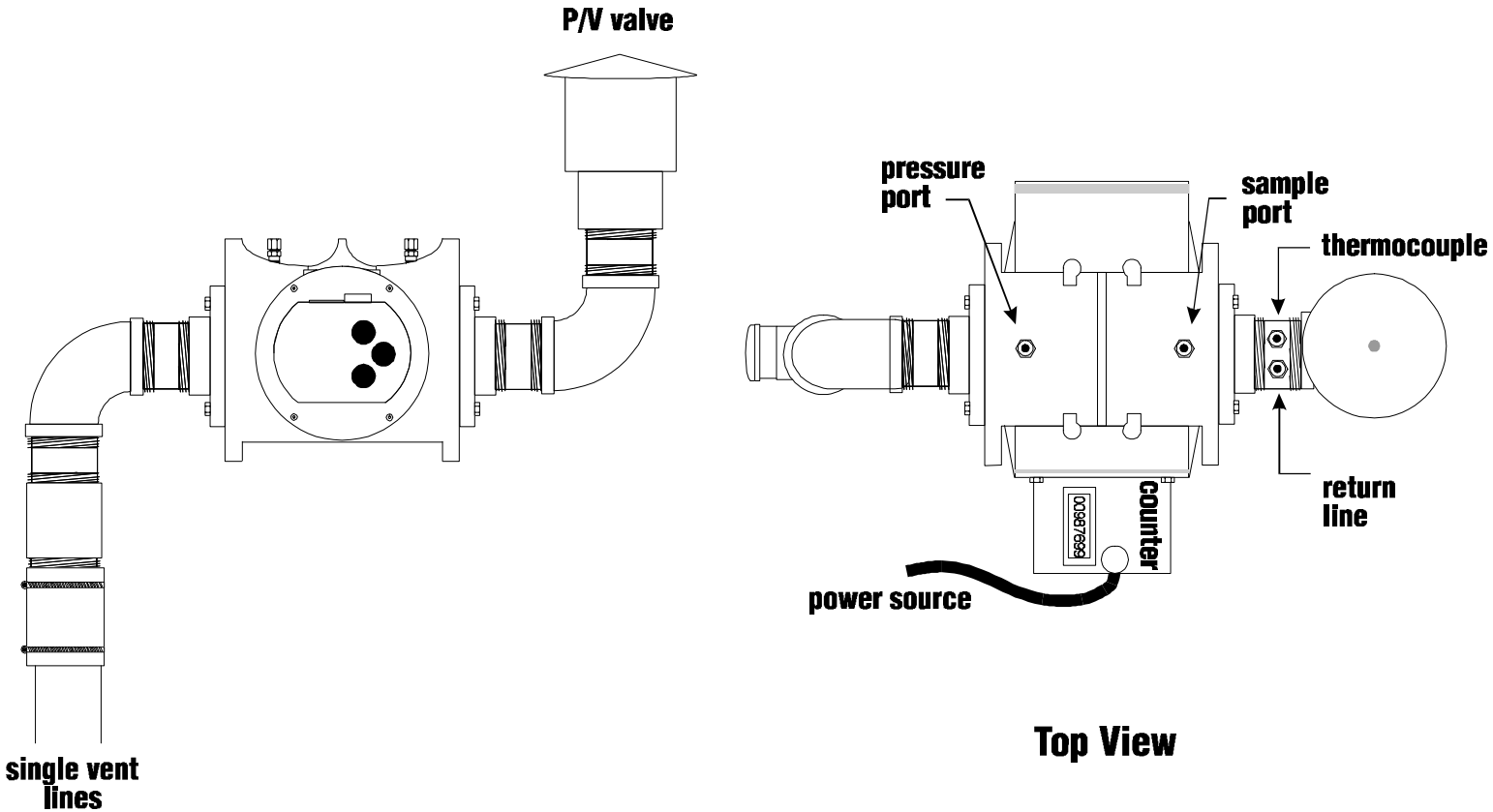

TP 201.2 F.19/ B. CORDOVA '95

FIGURE 20
Manifolded Vents (Volume Measurement)

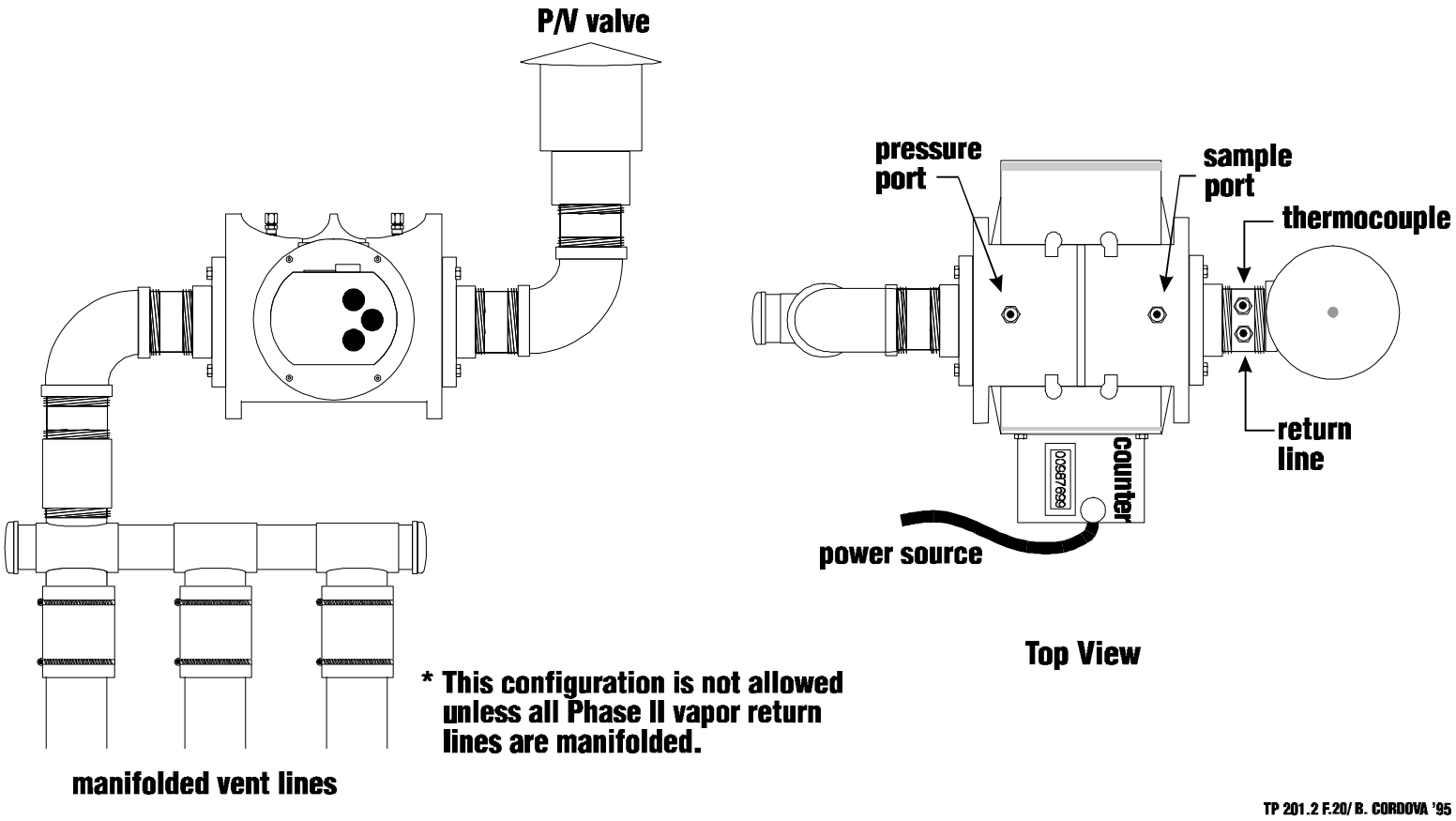

FIGURE 21
Vent or Vents (Concentration Measurement)

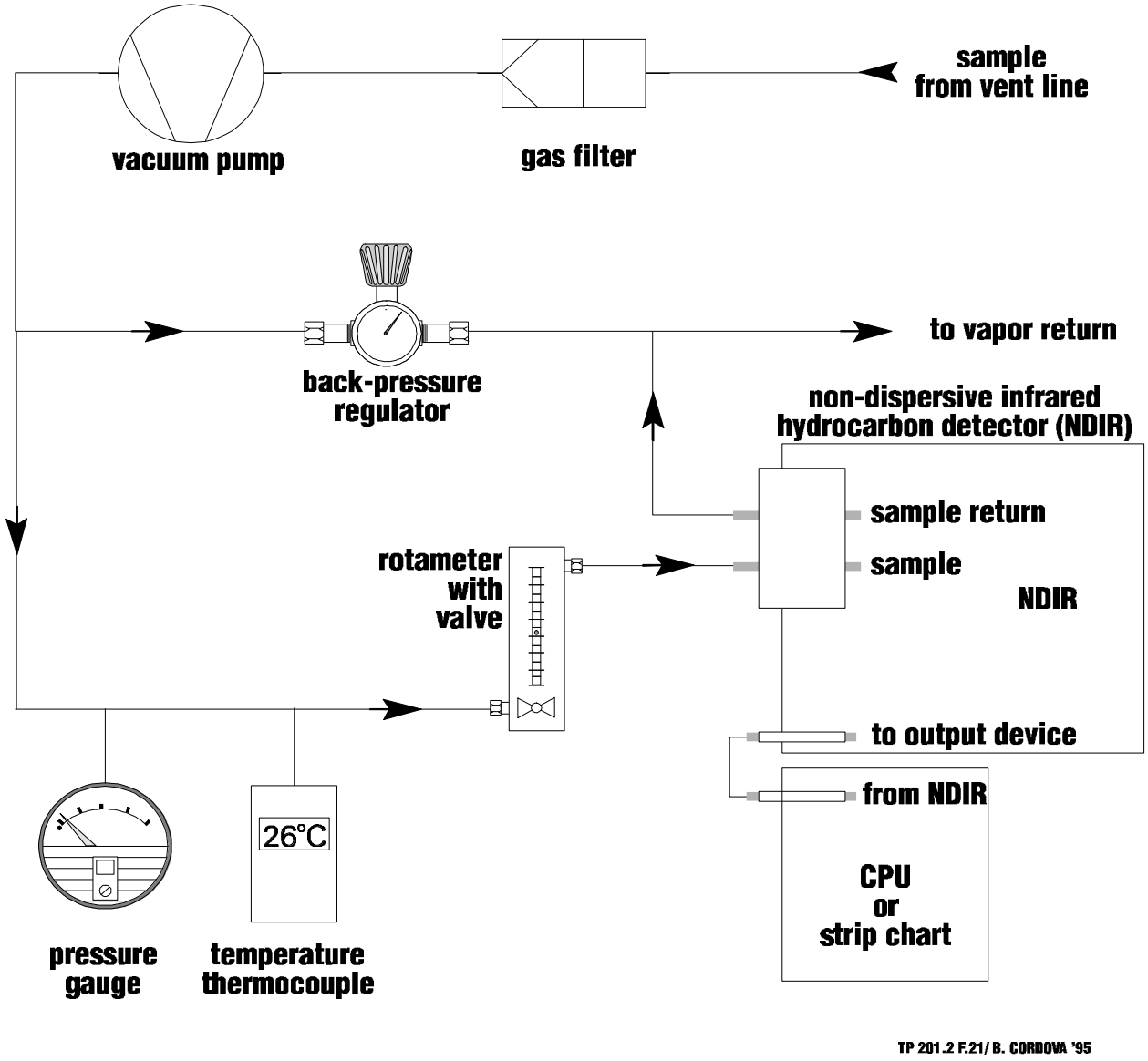

Form 1
Chain of Custody

System Description		Location			
Date of Application		Tester			
Code # & Description of Item Transferred	Condition of Item Transferred	Given by	Taken by	Date	Time

Form 2
Data
Test Point 1

System Description				Location			
Date				Tester			
Time	Episode #	$[HC]_{(vapor)}$	$V_{(vapor)}$	$P_{(vapor)}$	$T_{(vapor)}$	$V_{(liquid)}$	$RVP_{(liquid)}$

Form 2
Data
Test Point 2

System Description				**Location**			
Date				**Tester**			
Time	**Episode #**	**$[HC]_{(vapor)}$**	**$V_{(vapor)}$**	**$P_{(vapor)}$**	**$T_{(vapor)}$**	**$P_{(dynamic)}$**	**Phase II Notes**

Form 2
Data
Test Point 3

System Description				Location			
Date				Tester			
Time	Episode #	$[HC]_{(vapor)}$	$V_{(vapor)}$	$P_{(vapor)}$	$T_{(vapor)}$	$P_{(valve\ crack)}$	Phase I Notes

Form 2
Data
Test Point 4

System Description	**Location**
Date	**Tester**

Time	**Episode #**	**$V_{(facility)}$**	**$[HC]_{(fac.)}$**	**$V_{(fuel)}$**	**$[HC]_{(fuel)}$**	**$[HC]_{(in)}$**	**N**	**CO_2**	**CO**

Form 3
Results
Test Point 1

System Description				Location			
Date				Tester			
Time	Episode #	$V_{(std)}$	$[HC]_{(corrected)}$	$m_{(sleeve)}$	$m_{(idle)}$	m_1	Notes

Form 3
Results
Test Point 2

System Description				Location	
Date				Tester	
Time	Episode #	$V_{(std)}$	$[HC]_{(corrected)}$	m_2	Notes

Form 3
Results
Test Point 3

System Description				Location			
Date				Tester			
Time	Episode #	$V_{(std)}$	$[HC]_{(corrected)}$	m_3	Notes		

Form 3
Results
Test Point 4

System Description					Location	
Date					Tester	
Time	Episode #	$V_{(in)}$	$[HC]_{(in)}$	$V_{(out)}$	m_4	Notes

Form 3
Results
Efficiencies

System Description					**Location**				
Date					**Tester**				
Time	**Episode #**	$m_{(e,1)}$	$m_{(e,1)}$	$m_{(e,1)}$	$m_{(e,1)}$	$m_{(e,1)}$	E_e	**E**	**Notes**

Form 4
Permanent Records

System Description		Location			
Date of Application		Tester			
Code # & Description of Item Transferred	Condition of Item Transferred	Given by	Taken by	Date	Time