State of California
AIR RESOURCES BOARD

CALIFORNIA EXHAUST EMISSION STANDARDS AND TEST PROCEDURES FOR 2001 MODEL YEAR AND LATER SPARK-IGNITION MARINE ENGINES

Adopted: October 21, 1999

TABLE OF CONTENTS

Section
Page

Part I. Emission Regulations for 2001 and Later New Spark-Ignition Marine Engines, General Provisions.

1. General Applicability. 1

2. Definitions. 2

3. Abbreviations. 3

4. Measurement System. 4

5. General Standards; Increase in Emissions; Unsafe Conditions. 4

6. Defeat Devices, Prohibition. 5

7. [Reserved]. 5

8. Replacement Engines. 5

9. Exhaust Emission Standards for 2001 and Later Spark-Ignition Marine Engines. 5

10. Maintenance and Warranty Instructions. 8

11. Labeling. 8

12. Submission of Engine Identification Number 8

13. [Reserved]. 8

14. Application for Certification. 9

15. Approval of Application for Certification. 10

16. Engine Displacement of Spark-Ignition Marine engines. 11

17. Engine Families and Engine Family Groups. 11

18. Test Engines. 12

19. Executive Officer's Engines. 13

20. Test Procedures, General Requirements. 14

21. Service Accumulation Procedures; Test Engines. 15

22. Scheduled Maintenance; Test Engines. 15

23. Unscheduled Maintenance; Test Engines. 16

24. Engine Failure. 17

25. Data Submission. 17

26. Testing by the Executive Officer. 17

27. Certification. 18

28. Amendments to the Application. 19

29. Alternative Procedure for Notification of Additions and Changes. 20

30. Maintenance of Records. 20

31. Right of Entry. 22

32. Denial, Revocation, or Suspension of Certification. 24

33. Adjudicatory Hearing. 25

Part II. Spark-Ignition Marine Engines - Determination of Deterioration Factors.

1. Definitions.. 26

2. Acronyms and Abbreviations. 26

3. Deterioration Factor. 26

Part III. Emission Test Equipment Provisions.

1. Scope; Applicability. 26

2. Definitions. 27

3. Acronyms and Abbreviations. 27

4. Test Equipment Overview. 27

5. Dynamometer Specifications and Calibration Accuracy. 27

6. Dynamometer Torque Cell Calibration. 28

7. Engine Cooling System. 29

8. Lubricating Oil and Test Fuel. 29

9. Engine Intake Air Temperature Measurement. 31

10. Engine Intake Air Humidity Measurement. 31

11. Test Conditions. 32

12. Analytical Gases. 33

13. Analyzers Required. 34

14. Analyzer Accuracy and Specifications. 36

15. Analyzer Initial Calibration. 38

16. Hydrocarbon Analyzer Calibration. 38

17. Carbon Monoxide Analyzer Calibration. 40

18. Oxides of Nitrogen Analyzer Calibration. 42

19. NO_X Converter Check. 44

20. Carbon Dioxide Analyzer Calibration. 45

21. NDIR Analyzer Calibration. 45

22. Calibration of Other Equipment. 47

23. Analyzer Bench Checks. 47

24. Analyzer Leakage Check. 48

25. Analyzer Interference Checks. 48

26. Pre- and Post-test Analyzer Calibration. 50

27. Sampling System Requirements. 50

28. Measurement Equipment Accuracy/Calibration Frequency Table. 51

29. Catalyst Thermal Stress Test. 51

Appendix A to Part III 53

Appendix B to Part III -- Figures 54

Part IV. Gaseous Exhaust Test Procedures

1. Scope; Applicability. 56

2. Definitions. 56

3. Abbreviations. 56

4. Test Procedure Overview. 56

5. Recorded Information. 57

6. Engine Parameters to be Measured and Recorded. 58

7. Engine Inlet and Exhaust Systems. 58

8. Pre-test Procedures. 58

9. Engine Dynamometer Test Run. 59

10. Engine Test Cycle. 61

11. Post-test Analyzer Procedures. 62

12. Data Logging. 62

13. Exhaust Sample Procedure--Gaseous Components. 63

14. Raw Gaseous Exhaust Sampling and Analytical System Description. 65

15. Raw Gaseous Sampling Procedures. 66

16. Intake Air Flow Measurement Specifications. 66

17. Fuel Flow Measurement Specifications. 66

18. Data Evaluation for Gaseous Emissions. 67

19. Raw Emission Sampling Calculations. 67

20. CVS Concept of Exhaust Gas Sampling System. 71

21. Dilute Gaseous Exhaust Sampling and Analytical System Description. 72

22. [Reserved]. 76

23. Exhaust Gas Analytical System; CVS Grab Sample. 76

24. Dilute Sampling Procedure--CVS Calibration. 77

25. CVS Calibration Frequency. 83

26. Dilute Emission Sampling Calculations. 83

27. Catalyst Thermal Stress Resistance Evaluation. 86

Appendix A to Part IV -- Figures. 88

CALIFORNIA EXHAUST EMISSION STANDARDS AND TEST PROCEDURES
FOR 2001 MODEL YEAR AND LATER SPARK-IGNITION MARINE ENGINES

Part I. Emission Regulations for 2001 and Later New Spark-Ignition Marine Engines, General Provisions.

1. General Applicability.

(a) (1) This rule applies to model year 2001 and subsequent model year spark-ignition (SI) marine engines used to propel marine vessels as defined in the General Provisions of the United States Code, 1 U.S.C.3 (1992), unless otherwise indicated.

(2) Sterndrive and inboard engines are exempt from this rule.

(3) Every new spark-ignition marine engine that is manufactured for sale, sold, or offered for sale in California, or that is introduced, and delivered or imported into California for introduction into commerce, and which is subject to any of the standards prescribed in this article must be covered by an Executive Order, issued pursuant to this article.

(b) Each part of this article is severable, and in the event that any part of this chapter is held to be invalid, the remainder of this article remains in full force and effect.

(c) (1) For purposes of this article, military tactical vehicles or equipment means vehicles or equipment owned by the U.S. Department of Defense and/or the U.S. military services and used in combat, combat support, combat service support, tactical or relief operations, or training for such operations.

(2) This article shall not apply to engines used in off-road military tactical vehicles or equipment which have been exempted from regulations under the federal national security exemption, 40 CFR, subpart J, section 90.908, which is incorporated by reference herein. It shall also not apply to those vehicles and equipment covered by the definition of military tactical vehicle that are commercially available and for which a federal certificate of conformity has been issued under 40 CFR Part 91. subpart B, which is incorporated by reference herein.

(3) On January 1, 1997, the U.S. Department of Defense shall submit to the ARB a list of all vehicles and equipment that are exempted under the above provisions and which are located in the State of California. If any additional vehicle and equipment types are added to the list during any calendar year after January 1,

1997, the U.S. Department of Defense shall update the list and submit it to the ARB by January 1 of the following year.

2. Definitions.

The definitions in section 2441, Chapter 9, Title 13 of the California Code of Regulations apply with the following additions:

"Engine Family" is a subclass of a basic engine based on similar emission characteristics. The engine family is the grouping of engines that is used for the purposes of certification, and is determined in accordance with section 17.

"Engine-Displacement-System Combination" or "Engine Family- Displacement-Emission Control System Combination" is a subclass of an engine family based on engine displacement and specific emission control system components, and is used for purposes of test engine selection.

"Engine Model" or "Engine Code" is a subclass of an engine-displacement-system combination on the basis of the engine calibration (e.g., carburetor jet size, valve timing, etc.), and other parameters that may be designated by the Executive Officer.

"Gross Power" means the power measured at the engine crankshaft (or equivalent) and produced by an engine that is equipped with only the accessories that are necessary for engine operation.

"Hang-up" means the situation whereby hydrocarbon molecules are absorbed, condensed, or otherwise removed from the sample flow prior to the instrument detector; and any subsequent desorption of the molecules into the sample flow when such molecules are assumed to be absent.

"Incomplete Engine Assembly" is a basic engine assembly that does not include all of the components necessary for designation as a complete engine assembly, and is marketed in order to be a part of, and assembled into, a new unit of equipment.

"Oxides of Nitrogen" means the sum of the nitric oxide and nitrogen dioxide contained in a gas sample as if the nitric oxide were in the form of nitrogen dioxide.

"Rated Power" means the maximum brake power output (in kilowatts) of an engine as specified by an engine manufacturer.

"Rated Speed" means the engine speed (revolutions per minute [rpm]) at which the manufacturer specifies the maximum rated power of an engine.

"Span gas" means a gas of known concentration that is used routinely to set the output level of any analyzer.

"Special Tool" means a tool or fixture specified by an engine manufacturer that is intended to perform only a specific function with respect to an engine; and the effective usage of the tool or fixture requires special expertise.

3. Abbreviations.

ARB- California Air Resources Board.
AECD - Auxiliary emission control device
ASME- American Society of Mechanical Engineers
ASTM - American Society for Testing and Materials
C- Celsius.
cc- Cubic centimeter(s).
cfm- Cubic feet per minute.
cfh- Cubic feet per hour.
CLD - chemiluminescent detector
cm- Centimeter(s).
CO- Carbon monoxide.
CO_2 - Carbon Dioxide.
Conc- Concentration.
cu.- Cubic.
CVS- Constant Volume Sample.
EGR- Exhaust gas recirculation.
EP- End point.
F- Fahrenheit.
FEL- Family Emission Limit
g- Gram(s).
g/kW-hr - gram(s) per kilowatt hour
h- hour.
HC- Hydrocarbon(s.)
HCLD - heated chemiluminescent detector.
HFID - heated flame ionization detector.
Hg- Mercury.
hp- Horsepower.
HSC - Health and Safety Code
H_2O- Water.
in.- Inch(es)
K- Kelvin.
kg- Kilogram(s).
km- Kilometer(s).
kPa- Kilopascals.

kW - kilowatt
lb- Pound(s).
m- meter(s).
mph- Miles per hour.
mm- Millimeter(s).
N - Newton.
N - Nitrogen.
NDIR - non-dispersive infrared analyzer
NGPA - Natural Gas Processors Association
NIST- National Institute of Standards and Testing.
NOx - Oxides of nitrogen.
No.- Number.
O_2 - Oxygen.
OB- Outboard engine(s).
Pa- Pascals.
Pb- Lead.
PMD - Paramagnetic detector.
ppm- Parts per million by volume.
psi- Pounds per square inch.
psig- Pounds per square inch gauge.
PWC- Personal watercraft.
R- Rankine.
rpm- Revolutions per minute.
SI - Spark-ignition.
U.S.C.- United States Code.
VOC - Volatile organic compounds
wt- Weight.
ZROD- Zirconium dioxide sensor
^{o} - Degree(s).
%- Percent.

4. Measurement System.

These provisions utilize the International System of Units.

5. General Standards; Increase in Emissions; Unsafe Conditions.

(a) Any emission control system installed on or incorporated in a new spark-ignition marine engine to enable such an engine to conform to standards imposed by these provisions:
   (1) Must not in its operation or function cause the emission into the ambient air of any noxious or toxic substances that would not be emitted in the operation of such

engine without such emission control system, except as specifically permitted by regulation; and,

(2) Must not in its operation, function, malfunction result in any unsafe condition endangering the equipment, its user(s), or persons or property in close proximity to the equipment.

(b) Every manufacturer of new spark-ignition marine engines subject to any of the standards imposed by these provisions must test, or cause to be tested, engines in accordance with good engineering practice to ascertain that such test engines will meet the requirements of this section for the useful life of the engine.

6. Defeat Devices, Prohibition.

(a) No spark-ignition marine engine may be equipped with a defeat device.

(b) Defeat device means any element of design that:

(1) Senses temperature, engine RPM, manifold vacuum, or any other parameter for the purpose of activating, modulating, delaying or deactivating the operation of any part of the emission control system; and,

(2) Reduces the effectiveness of the emission control system under conditions that may reasonably be expected to be encountered in normal equipment operation and use, unless:

(i) Such conditions are substantially included in the test procedure; or,

(ii) The need for the device is justified in terms of protecting the spark-ignition marine engine against damage or accident; or,

(iii) The device does not go beyond the requirements of engine starting or warm-up.

7. [Reserved].

8. Replacement Engines.

No new spark-ignition marine engines may be produced for sale to replace spark-ignition marine engines in pre-2001 model year equipment after the 2004 model year, unless those engines comply with the 2001 model year emission standards.

9. Exhaust Emission Standards for 2001 and Later Spark-Ignition Marine Engines.

(a) Exhaust emissions from new spark-ignition marine engines manufactured for sale, sold, or offered for sale in California, or that are introduced, delivered or imported into California for introduction into commerce, must not exceed the following standards:

Corporate Average Emission Standards by Implementation Date
HC+NOx (in g/kW-hr)

Model Year	Max. Family Emission Limit (FEL)	$P_{tx} < 4.3$ kW	$P_{tx} \geqq 4.3$ kW
2001	Not Applicable	81.00	$(0.25 \times (151+557/P_{tx}^{0.9}))+6.00$
2004	80	64.80	$(0.20 \times (151+557/P_{tx}^{0.9}))+4.80$
2008	44	30.00	$(0.09 \times (151+557/P_{tx}^{0.9}))+2.10$

where:
P_{tx} is the average power in kW (sales-weighted) of the total number of spark-ignition marine engines produced for sale in California in model year x. Engine power must be calculated using the Society of Automotive Engineers (SAE) standard J1228, November 1991, incorporated herein by reference. Engine manufacturers must not determine P_{tx} by combining the power outputs of outboard engines with the power outputs of personal watercraft engines.

(b) An engine manufacturer may comply with the standards directly on an individual engine family basis. Consequently in Table 1, FELs are not applicable for any model year and P_{tx} means the average power in kW (sales-weighted) of the subject engine family produced for sale in California in model year x.

Compliance with the standards on a corporate average basis is determined as follows:

$$\frac{\sum_{j=1}^{n} (PRODjx)(FELjx)(Pjx)}{\sum_{j=1}^{n} (PRODjx)(Pjx)} = STDca$$

where:

n = total number of engine families (by category)

PRODjx = number of units of each engine family j produced for sale in California in model year x.

FELjx = the Family Emission Limit for engine family j in model year x, which must be determined by the engine manufacturer subject to the following conditions: (1) no individual engine family FEL shall exceed the maximum allowed value as specified in the table displayed in paragraph 9(a); (2) no engine family designation or FEL shall be

amended in a model year unless the engine family is recertified; and (3) prior to sale or offering for sale in California, each engine family shall be certified in accordance with section 2447 of Title 13, California Code of Regulations, and shall be required to meet the engine manufacturer's FEL as a condition of the Executive Order. Prior to certification, the engine manufacturer shall also submit estimated production volumes for each engine family to be offered for sale in California.

Pjx = The average power in kW (sales-weighted) of engine family j produced for sale in California in model year x. Engine power must be calculated using SAE standard J1228, November 1991, incorporated herein by reference.

STDca = An engine manufacturer's calculated corporate average HC+NOx exhaust emissions from those California spark-ignition marine engines subject to the California corporate average HC+NOx exhaust emission standard determined from Table 1, as established by an Executive Order certifying the California production for the model year. This Executive Order must be obtained prior to the issuance of certification Executive Orders for individual engine families for the model year.

(1) For purposes of compliance under this paragraph, engine manufacturers must not corporate average outboard engine families in combination with personal watercraft engine families.

(2) During engine manufacturer's production year, for each engine family, the manufacturer shall provide to the Executive Officer within 45 days after the last day in each calendar quarter: The total number of spark-ignition marine engines produced for sale in California and their applicable FEL.

(3) The Executive Order certifying the California production for a model year must be obtained prior to the issuance of certification Executive Orders for individual engine families for the model year.

(4) The engine manufacturer's average pollutant exhaust emissions must meet the corporate average standard at the end of the manufacturer's production for the model year. No later than 90 days after the end of the model year, the manufacturer must calculate a corrected corporate average using actual rather than projected sales.

(5) Production and sale of spark-igniton marine engines which result in non-compliance with the California standard for the model year shall cause an engine manufacturer to be subject to civil penalties, per engine, pursuant to section 43017 of the Health and Safety Code, and subject to all other remedies available under Part 5, Division 26 of the Health and Safety Code. All excess emissions resulting

from non-compliance with the California standard must be made up in the following model year.

(6) For each model the engine manufacturer shall submit California sales data.

(c) In 2001 and subsequent model years, fire and police departments, and other entities that specialize in emergency response may purchase emergency equipment powered by a non-California-certified spark-igniton marine engine only when such equipment with a California-certified spark-igniton marine engine is not available. For purposes of this section, a request to purchase emergency equipment powered by a non-California-certified engine must be submitted for approval to the Executive Officer.

10. Maintenance and Warranty Instructions.

Maintenance and warranty instructions must conform with the requirements pursuant to sections 2445.1 and 2445.2, Title 13, California Code of Regulations.

11. Labeling.

Labeling required pursuant to sections 2443.1, 2443.2 and 2443.3, Title 13 of the California Code of Regulations must conform with the requirements specified therein.

12. Submission of Engine Identification Number.

(a) The manufacturer of any spark-ignition marine engine covered by an Executive Order must furnish to the Executive Officer, at the beginning of each model year, information and an explanation about the engine identification number system pursuant to section 2443.1(e), Title 13 of the California Code of Regulations that identifies production engines that are covered by an Executive Order.

(b) Within 30 days of receiving a request by the Executive Officer, the manufacturer of any spark-ignition marine engine covered by an Executive Order must identify such engines by their identification number system provided under the requirements of paragraph (a) above.

13. [Reserved].

14. Application for Certification.

(a) The Executive Officer may request notification, sixty (60) days prior to the initial model year submission of an engine manufacturer's certification application(s), of the engine manufacturer's intent to seek engine family certification (i.e., a letter of intent) so that the Executive Officer can adequately allocate resources required for reviewing such certification applications in a timely manner. Such letters of intent must provide the engine manufacturer's best estimate of general information for the applicable model-year certification, such as identification of each engine family, date of expected submission, etc.

(b) New spark-ignition marine engines are covered by the following:

(1) Manufacturers of new spark-ignition marine engines must complete and submit to the Executive Officer a written application, in the English language, requesting an Executive Order that certifies such engines be issued. The engine manufacturer must update and correct by amendment such applications whenever changes are made to engines that are delineated in the certification application (see section 28). An engine manufacturer must include within a single application for certification all engine models within an engine family (see section 17 to determine what is an engine family). The application must describe each applicable engine model in the engine family. An engine manufacturer may, however, choose to apply separately for certification of part of its engine product line. The selection of test engines and the computation of emission test results must be determined by the Executive Officer for each separate and individual engine family certification application.

(2) The certification application must be signed by an authorized representative of the engine manufacturer. The certification application must include the following:

(i) Identification and description of the engines covered by the engine family certification application; descriptions of the engine designs (e.g., combustion chamber, valves, etc.); and, identifications (i.e., part numbers) and descriptions of the emission control system and components, auxiliary emission control devices, fuel system and components, air inlet system and components, exhaust system and components, and any optional equipment. For purposes of this section, “auxiliary emission control device” means any element of design that senses temperature, engine RPM, manifold vacuum, or any other parameter for the purpose of activating, modulating, delaying, or deactivating the operation of any part of the emission control system.

(ii) Emission control warranty information as set forth in section 10.

(iii) Emission control and consumer/environmental label information as set forth in section 11, including actual production labels and descriptions of all applicable label attachment locations.

(iv) Identification and description (i.e., range, value, etc.) of any adjustable engine parameters (e.g., idle fuel/air, ignition timing, etc.); and a description of the method used to ensure that the emission characteristics of the certification test engines remain representative of those of the production engines with respect to any adjustments of such engine parameters.

(v) Projected California sales data of the engine family for which certification is requested. Where applicable, the sales for each engine model within the engine family should be provided. Such estimated sales data must include an explanation of the method used to make the estimate.

(vi) A description of the facility and equipment used to test the engines for certification including (as applicable) specifications about the dynamometers, gas analyzers, data collection devices, etc.

(vii) Information about the certification test fuels and lubricants, and information about the commercially available fuels and lubricants recommended for use in the production engines.

(viii) A description of the proposed certification test engine service accumulation (e.g., break-in) procedure and the certification test engine maintenance schedule.

(ix) A statement of recommended periodic and anticipated procedures for maintenance necessary to assure that the engine covered by an Executive Order conforms to the regulations. The statement must include a listing of the fuels and lubricants recommended for use by the ultimate purchaser and a description of the training program for personnel who will perform such maintenance, and the equipment required to perform such maintenance.

(x) The engine family's FEL and an estimate of the overall corporate average emissions for that model year.

(xi) Information about high-altitude adjustments, and an engineering evaluation of one engine family within the manufacturer's line that demonstrates emissions compliance at high altitudes.

(3) Completed copies of the engine family certification application and of any amendments thereto, and all notifications under sections 28 and 29 must be submitted in such multiple copies as the Executive Officer requires.

15. Approval of Application For Certification.

(a) After a review of the complete engine family application for certification and any other information that the Executive Officer requires, the Executive Officer will approve the application if all the foregoing conditions are satisfied.

(b) The Executive Officer may disapprove an engine family application for certification, in whole or in part, for reasons including, but not limited to, being incomplete, inaccurate, or providing inappropriate information regarding proposed break-in procedures, maintenance, test equipment, label content or locations, test fuel or lubricant. It may also be disapproved if the described engines incorporate any defeat devices. If an engine family certification application or part thereof is rejected, the Executive Officer will notify the engine manufacturer in writing and set forth the reasons for such rejection.

16. Engine Displacement of Spark-Ignition Marine engines.

Engine displacements must be calculated using nominal engine values and rounded to the nearest tenth of a cubic centimeter, in accordance with ASTM E 29-93a, (May 1993), incorporated by reference herein.

17. Engine Families and Engine Family Groups.

(a) Certification applications submitted by engine manufacturers must divide engines covered therein into groupings that are expected to have similar emission characteristics throughout their useful life. Each group of engines with similar emission characteristics must be defined as a separate engine family.

(b) In order to be included within the same engine family, engines must be identical in all of the following specifications:
- (1) The combustion cycle.
- (2) The cooling mechanism.
- (3) The cylinder block configuration (i.e., inline, vee, opposed, bore spacings, etc.).
- (4) The number of cylinders.
- (5) The method of air aspiration.
- (6) The number, location, volume, and composition of any catalytic converters.
- (7) The thermal reactor characteristics.
- (8) The number of carburetors, as applicable.
- (9) The prechamber characteristics.
- (10) The exhaust port(s) and cylinder design of two-stroke engines.

(c) At the engine manufacturer's option, reciprocating engines identical in all the specifications listed in paragraph (b) of this section may be further divided into different engine families if the Executive Officer determines that they may be expected to have different emission characteristics. This determination will be based upon consideration of factors such as:
- (1) The bore and stroke.
- (2) The combustion chamber configuration.
- (3) The intake and exhaust timing method of actuation (i.e., poppet valve, reed valve, rotary valve, etc.).
- (4) The intake and exhaust valve or port sizes, as applicable.
- (5) The fuel system.
- (6) The exhaust system.

18. Test Engines.

(a) Test engines will be selected by the engine manufacturer to represent each engine-displacement-system combination. The engine manufacturer will select the engine configuration (i.e., air inlet system, exhaust system, engine calibration, etc.) of each engine-displacement-system combination in the engine family that is expected to have the greatest probability of exceeding the emission standards. The Executive Officer will make the final determination whether the test engines selected by the engine manufacturer may be used for certification testing. At the manufacturer's option, the criterion for selecting the worst case engine may be that engine configuration which has the highest weighted brake-specific fuel consumption over the engine test cycle described in section 20(b)(5).

(b) A test engine must be a complete engine assembly with all emission control systems and components that are specified in the certification application installed and functional for test purposes.

(c) Concurrent with the selection of an engine family test engine, the Executive Officer will determine the engine parameters subject to adjustment for certification, assembly-line quality-audit and compliance tests. The Executive Officer will also evaluate the adequacy of the limits, stops, seals, or other methods utilized to control, restrict or inhibit adjustment, and will evaluate resultant adjustable ranges of each parameter. The Executive Officer will notify the engine manufacturer of each determination.

(1) The Executive Officer will consider an engine parameter to be subject to adjustment if the parameter is capable of adjustment and the adjustment may significantly affect emissions.

(2) In order to determine if an engine parameter is subject to adjustment, the Executive Officer will consider the in-use probability that the parameter may be changed from the values, or beyond the positions, specified in the engine family certification application (i.e., misadjustment). The Executive Officer may evaluate this probability on the basis of factors such as: ease of access to the parameter, damage to the engine or equipment that may result from an attempt to misadjust the parameter, consequence with respect to emissions of a misadjustment, information provided in the preliminary engine family application, and information obtained from any compliance-related activities that are, or may be, required.

(3) The Executive Officer will determine an adjustable parameter to be adequately inaccessible when either or both of the following applies:

(i) The physical device that controls the adjustable parameter can be accessed only by the disassembly of the engine or equipment, and this disassembly requires the use of special tools.

(ii) Adequate deterrence to restrict access to an adjustable parameter will not be demonstrated by the necessity to remove an engine component that is routinely removed in maintenance, or that is required to be removed in order to perform an adjustment.

(4) The Executive Officer shall determine an adjustable parameter to be adequately controlled or restricted when one or more of the following apply:
   (i) The device that controls the adjustable parameter is restricted from adjustment beyond the range or values specified in the engine family certification application.
   (ii) The restriction may be circumvented only through the use of special tools.
   (iii) Attempts to misadjust the parameter would result in breakage of the restrictive device and/or the parameter and thereby result in unsatisfactory engine operation.

(5) The Executive Officer may also determine an adjustable parameter to be adequately controlled or restricted when either one or both of the following apply:
   (i) Attempts to misadjust the parameter are ineffective. For example, an adjustment beyond the values or positions specified in the engine family certification application would not alter significantly the engine performance; hence, the emission levels as projected in certification are representative of in-use engine family emissions.
   (ii) Any solid-state memory devices that control or monitor emission control systems or components are protected adequately against unauthorized or inappropriate changes.

(f) [Reserved].

(g) In lieu of testing an engine and submitting data thereon, an engine manufacturer may, with the prior written approval of the Executive Officer, submit exhaust emission data on a similar engine for which certification has previously been obtained or for which all applicable data have previously been submitted (i.e., carryover).

(h) All engines must have closed crankcases. For purposes of this section, “crankcase” means the housing for the crankshaft and other related internal parts.

19. Executive Officer's Engines.

The Executive Officer may require additional tests on the engines selected in accordance with section 18 and tested in accordance with section 20.

20. Test Procedures, General Requirements.

(a) For each engine family, engine manufacturers must determine a deterioration factor for each regulated pollutant pursuant to Part II.

(b) Certification testing of exhaust emissions.
   (1) Manufacturers of spark-ignition marine engines must use the test procedures outlined in Part IV.

(2) The exhaust emission test consists of prescribed sequences of engine operating conditions to be conducted on an engine dynamometer. The exhaust gases generated during engine operation are sampled either raw or dilute (as required), and specific components are analyzed through the exhaust gas analytical system. The test is designed to measure (as applicable) the concentration of hydrocarbons (HC), carbon monoxide (CO), carbon dioxide (CO_2), oxides of nitrogen (NOx), exhaust volume, temperature, fuel flow, and the gross power output. The measured values are weighted and used to calculate the brake-specific emissions of each pollutant (in g/kW-hr).

(4) For engines with adjustable parameters, the Executive Officer may adjust or require to be adjusted those adjustable parameters to any specification within the adjustable range during testing to determine compliance with the requirements of this Part.

(5) The exhaust emission test uses prescribed sequences of engine operation as indicated in Table 20-1.

TABLE 20-1. Spark-Ignition~~,~~ Marine Engine Test Cycle

Mode Number	1	2	3	4	5
Speed (%)	100	80	60	40	Idle
Torque (%)	100	71.6	46.5	25.3	0
Weighting Factor	0.06	0.14	0.15	0.25	0.40

(6) Engine power (in kilowatts) must be calculated using the Society of Automotive Engineers (SAE) standard J1228, November 1991, incorporated herein by reference.

(c) The Executive Officer will prescribe emission test procedures for any spark-ignition marine engine that the Executive Officer determines is not susceptible to satisfactory testing by the methods set forth in the test procedures.

(e) The Executive Officer may revise these test procedures on a case-by-case basis when a request to do so is supported by data and results, or other information, showing the necessity for the revision.

21. Service Accumulation Procedures; Test Engines.

(a) The service accumulation (i.e., break-in) procedure for an emission test engine must be the procedure specified by the engine manufacturer, and must be approved by the Executive Officer before the accumulation of hours.

(b) During the service accumulation period, engine manufacturers must not operate engines for a total of more than 12 hours unless an allowance to do so is approved by the Executive Officer. Engine shutdowns are permitted during the operating sequence; however, the periods of shutdown must not be included in the 12 hour total.

22. Scheduled Maintenance; Test Engines.

(a) Engine manufacturers may schedule and perform break-in maintenance on the emission test engine and its emission control and fuel systems only at the same time intervals specified in the engine manufacturer's break-in maintenance instructions furnished to the ultimate purchaser.

(b) During service accumulation, an engine manufacturer must be restricted to inspecting, replacing, cleaning, adjusting and servicing of the following items: (1) idle speed and idle air/fuel mixture; and, (2) spark plugs. Such procedures must be conducted in a manner consistent with service instructions and specifications provided by the engine manufacturer for use by the ultimate purchaser. Such procedures must not render the certification test engines unrepresentative of the emission characteristics of the engine family production engines.

(c) The Executive Officer may specify, within the physically available range, the ignition timing, idle air/fuel mixture and other fuel system adjustments to be used at each tune-up.

(d) Engine manufacturers may perform periodic changes of engine oil, and may change or service oil, air and fuel filters at the time intervals specified in the engine manufacturer's break-in maintenance instructions that are furnished to the ultimate purchaser.

(e) Engine manufacturers may request from the Executive Officer authorization to perform service accumulation maintenance of emission control related components not specifically authorized by this section, and for anticipated maintenance, before to the beginning of the service accumulation period. The Executive Officer will approve the performance of such maintenance, if the engine manufacturer makes a satisfactory showing that the maintenance will be performed by and/or for the ultimate purchaser on engines in use and that the maintenance is reasonable and necessary.

23. Unscheduled Maintenance; Test Engines.

(a) Engine manufacturers must not perform any unscheduled engine, emission control system, or fuel system adjustment, repair, removal, disassembly, cleaning, or replacement on engines without the advance approval of the Executive Officer.

(1) In the case of unscheduled maintenance the Executive Officer will approve such maintenance if the Executive Officer:

(i) Has made a preliminary determination that part failure or system malfunction, or the repair of such failure or malfunction, does not render the engine unrepresentative of engines in use, and does not require direct access to the combustion chamber, except for spark plug, fuel injection component, or removable prechamber removal or replacement; and

(ii) Has made a determination that the need for maintenance or repairs is indicated by an overt indication of malfunction such as persistent misfire, engine stall, overheating, fluid leakage, loss of oil pressure, or charge indicator warning.

(2) Emission measurements must not be used as a means of determining the need for unscheduled maintenance under paragraph (a)(1)(i) of this section.

(b) Engine manufacturers may perform repairs of engine components of test engines, other than the engine, emission control system, or fuel system, only as a result of part failure or with the prior approval of the Executive Officer.

(c) The Executive Officer must be given the opportunity to verify the extent of any overt indication of part failure (e.g., misfire, stall), or an activation of an audible and/or visual signal, before the engine manufacturer performing any maintenance related to such overt indication or signal.

(d) Unless approved by the Executive Officer before use, engine manufacturers must not use any equipment, instruments, or tools to identify malfunctioning, maladjusted, or defective engine components unless the same or equivalent equipment, instruments, or tools will be available at dealerships and other service outlets; and:

(1) Are used in conjunction with scheduled maintenance on such components; and,

(2) Are used subsequent to the identification of an engine malfunction, as provided in paragraph (a)(1) of this section for emission data engines.

(e) If the Executive Officer determines that part failure or system malfunction occurrence and/or repair rendered the engine unrepresentative of engines in use, the engine must not be used as a test engine.

(f) Unless waived by the Executive Officer, complete emission tests are required before and after any engine maintenance that may reasonably be expected to affect emissions.

24. Engine Failure.

Engine manufacturers must not use as a test engine any test engine that incurs major mechanical failure requiring disassembly of the engine. This prohibition does not apply to failures that occur after completing the service accumulation period.

25. Data Submission.

(a) Engine manufacturers must submit the test engine emission data and results for all emission data tests (including voided tests) that were conducted on the test engines.

(b) The engine manufacturer must furnish to the Executive Officer, with the submission of the information required by paragraph (a), explanations of the cause for any voided emission tests. The Executive Officer will determine if voiding the test was appropriate based upon the explanation given by the engine manufacturer.

(c) When unscheduled or unanticipated maintenance is performed, the engine manufacturer must furnish to the Executive Officer a complete record of all pertinent maintenance, including the malfunction diagnosis, the corrective action taken, and the test data obtained.

(d) A complete record of all maintenance that was performed on any test engines must be furnished to the Executive Officer as part of the certification application.

26. Testing by the Executive Officer.

(a) At the conclusion of the service accumulation procedure and emission tests, the engine manufacturer must submit the test engine data and results to the Executive Officer in accordance with the requirements of section 25. After reviewing the test data and results, the Executive Officer may conduct emission testing on the test engine(s) (i.e., confirmatory testing) to verify the engine manufacturer's test results, and to determine that the test engine emission characteristics are representative of production engines.

(b) As part of the test data and results submission, an engine manufacturer may request that the Executive Officer not conduct confirmatory testing of the test engine(s) (i.e., test-waiver request), and that the engine manufacturer's test data and results be accepted as officially representative of production engines (i.e., projected emission levels).

(c) The Executive Officer will consider an engine manufacturer's test-waiver request by evaluating information submitted under the requirements of section 25, information contained in the engine family application, and other certification-related information. The Executive Officer will determine whether or not to conduct confirmatory emission testing on the basis of, but not limited to, such factors as:

(1) Marginal compliance with the applicable emission standards;
(2) Demonstrated capability of the engine manufacturer's prior certification-related activities;
(3) Use of new or different technologies that may affect engine emission characteristics, or that may not be compatible with existing procedures; and,
(4) Reasonableness of emission test data and results.

(d) Whenever the Executive Officer determines that confirmatory testing is not warranted, the engine manufacturer's test data and results will be accepted as the official test data and results for purposes of the certification review specified in section 27(a)(2)(i).

(e) Whenever the Executive Officer determines that confirmatory testing is warranted, the Executive Officer will notify the engine manufacturer to submit one or more of the test engines, at such a place or places as the Executive Officer may designate, for purposes of conducting confirmatory testing. The data and results from that test will, unless subsequently invalidated by the Executive Officer, comprise the official test engine(s) data and results for purposes of the certification review specified in section 27(a)(2)(i).

(f) The engine manufacturer may request a retest. The results of the retest will be used to determine compliance with the applicable emission standards.

(g) If any emission test result exceeds the applicable standard, the Executive Officer will deny certification.

27. Certification.

(a) New spark-ignition marine engines produced by a manufacturer are covered by the following certification requirements:

(1) The engine manufacturer must submit to the Executive Officer a statement that the test engine for which data have been submitted has been tested in accordance with the applicable test procedures, that it meets the requirements of such tests, and that, on the basis of such tests, it conforms to the requirements of this Part. If such statements cannot be made with respect to any engine tested, the engine must be identified, and all pertinent test data relating thereto must be supplied.

(2) (i) If, after review of the test reports and data submitted by the engine manufacturer, data derived from any inspection carried out under section 31, and any other pertinent data or information, the Executive Officer determines that a test engine(s) meets the requirements of section 43013 of the California Clean Air Act and of these provisions, the Executive Officer will issue an Executive Order certifying such engine(s) except for engines covered by section 32.

(ii) The engine family certification will be granted only for the model-year engine production as specified by the Executive Officer in the Executive Order; and upon such terms as the Executive Officer may deem necessary to assure that any new spark-ignition marine engine covered by the Executive Order will meet the requirements of these provisions.

(iii) The Executive Order will apply to all engines within the engine family represented by the test engine and will certify compliance with no more than one set of applicable standards.

(iv) The engine manufacturer may, at its option, proceed with any of the following alternatives with respect to engines represented by a test engine(s) determined not to be in compliance with applicable standards:

(A) Delete from the application for certification engines that were represented by the failed test engine. The Executive Officer will then select in place of each failed engine an alternate engine chosen in accordance with the selection criteria that were employed in selecting the engine that failed; or,

(B) Repair and retest the failed engine to demonstrate that it meets the applicable standards. The engine manufacturer must then test a second engine that is in all material respects the same as the first engine (as repaired) in accordance with the applicable test procedures.

(v) If the engine manufacturer does not submit the data required under paragraphs (2)(i), (ii) and (iii) of this section, the Executive Officer will deny certification.

28. Amendments to the Application.

(a) The engine manufacturer must inform the Executive Officer by written amendment to the certification application of any proposed changes to engines that are in production or will be produced. The Executive Officer will, if appropriate, select a new test engine. Except as provided in section 29, the engine manufacturer must not institute any changes until approved by the Executive Officer.

(b) The Executive Officer may allow reduced testing with respect to the requirements of this section.

29. Alternative Procedure For Notification of Additions and Changes.

(a) (1) If the engine manufacturer determines that a change in an engine family model will not result in failure of the subject engines to continue to meet applicable emission standards, an engine manufacturer may elect to notify the Executive Officer at the time such a change is made rather than in advance as required by section 28.

(2) Such notification must include a full description of the addition or change and any supporting documentation provided by the engine manufacturer to support its determination that the addition or change does not cause noncompliance.

(3) The engine manufacturer's determination that the addition or change does not cause noncompliance must be based on an engineering evaluation of the addition or change and/or testing.

(b) (1) The Executive Officer may require that additional emission testing be performed to support the engine manufacturer's original determination submitted in accordance with paragraph (a) of this section.

(2) If additional testing is required, the Executive Officer will proceed as in section 28.

(3) If the Executive Officer requests additional test data, the engine manufacturer must provide such data within 30 days of the request or the engine manufacturer must rescind the addition or change immediately after the expiration of the 30 day period.

(4) The Executive Officer may grant additional time to complete testing if additional testing is required.

(5) If based on this additional testing or any other information, the Executive Officer determines that the engines affected by the addition or change do not meet the applicable standards, the Executive Officer will notify the engine manufacturer to rescind the addition or change immediately upon receipt of the notification, and to cease selling engines affected by such addition or change.

(c) If an engine manufacturer elects to produce engines under this section, the engine manufacturer, upon notification from the ARB that engines that it has produced do not meet the standards set forth herein, will be subject to being enjoined from any further sales of such products in the State of California pursuant to section 43017 of the Health and Safety Code. Prior to seeking to enjoin an engine manufacturer, the Executive Officer will consider any information provided by the engine manufacturer.

30. Maintenance of Records.

(a) The manufacturer of any spark-ignition marine engine subject to any of the standards or procedures prescribed in these provisions must establish, maintain and retain the following adequately organized and indexed records;

(1) General records.

(i) (A) Identification and description of all certification engines for which testing is required under this Part.

(B) A description of all emission control systems that are installed on or incorporated in each certification engine.

(C) A description of all procedures used to test each certification engine.

(ii) A properly completed application, following the format prescribed by the California Air Resources Board for the appropriate year of production, must fulfill each of the requirements set forth in paragraph (a)(1)(i) of this section.

(2) Individual records.

(i) A brief history of each spark-ignition marine engine used for certification under these provisions including:

(A) (1) In the case where a current production engine is modified for use as a certification engine, a description of the process by which the engine was selected and of the modification made.

(2) In the case where the certification engine is not derived from a current production engine, a general description of the build-up of the engine (e.g., experimental heads were cast and machined according to supplied drawings, etc.).

(3) In both of the above cases, a description (as applicable) of the origin and selection process for the carburetor, fuel system, emission control system components, and exhaust aftertreatment device must be included. The required description must specify the steps taken to assure that the certification engine is representative of production engines with respect to its fuel system, emission control system components, exhaust aftertreatment device, or any other device or component that can reasonably be expected to influence exhaust emissions. The description must also state that all components and/or engine construction processes, component inspection and selection techniques, and assembly techniques employed in constructing such engines are reasonably likely to be implemented for production engines, or that they are as closely analogous as practicable to planned construction and assembly processes.

(B) A complete record of all certification emission tests performed (except tests performed by ARB directly) including test results, and the date and purpose of each test, and the hours accumulated on the engine.

(C) The date of each service accumulation procedure.

(D) [Reserved].

(E) A record and description of all maintenance and other service performed, including the date of the maintenance or service and the reason for it.

(F) A record and description of each test performed to diagnose engine or emissions control system performance, giving the date and time of the test and the reason for it.

(G) [Reserved].

(H) A brief description of any significant events affecting the engine during the period covered by the history, including such extraordinary events as engine accidents or dynamometer runaway.

(ii) Each such history must state the date that any of the selection or build-up activities in paragraph (a)(2)(i)(A) of this section occurred with respect to the certification engine. The history must be updated each time the operation status of the engine changes or additional work is performed on it.

(3) All records, other than routine emission test records, required to be maintained under these provisions must be retained by the engine manufacturer for a period of six (6) years after the issuance of all Executive Orders to which they relate. Routine emission test records must be retained by the manufacturer for a period of one (1) year after issuance of all Executive Orders to which they relate. Records may be retained as hard copy or reduced to rewritable compact disc, microfilm, punch cards, etc., depending on the record retention procedures of the engine manufacturer, provided, in every case, all the information contained in the hard copy must be retained.

31. Right of Entry.

(a) Any engine manufacturer subject to these emission standards and test procedures, upon receipt of prior notice must admit or cause to be admitted during operating hours any ARB Enforcement Officer that has presented proper credentials to any of the following:

(1) Any facility where tests or procedures or activities connected with such tests or procedures are or were performed.

(2) Any facility where any new spark-ignition marine engine is present and is being, has been, or will be tested.

(3) Any facility where a manufacturer constructs, assembles, modifies, or builds-up an engine into a certification engine that will be tested for certification.

(4) Any facility where any record or other document relating to any of the above is located.

(b) Upon admission to any facility referred to in paragraph (c)(1) of this section, any ARB Enforcement Officer must be allowed:

(1) To inspect and monitor any part or aspect of such procedures, activities, and testing facilities, including, but not limited to, monitoring engine preconditioning, emissions tests and break-in, maintenance, and engine storage procedures.

(2) To verify correlation or calibration of test equipment; and,

(3) To inspect and make copies of any such records, designs, or other documents; and,

(4) To inspect and/or photograph any part or aspect of any such certification engine and any components to be used in the construction thereof.

(c) To permit an ARB determination whether production spark-ignition marine engines conform in all material respects to the design specifications that apply to those engines described in the Executive Order certifying such engines and to standards prescribed herein, engine manufacturers must, upon receipt of prior notice, admit any ARB Enforcement Officer, upon presentation of credentials, to:

(1) Any facility where any document design, or procedure relating to the translation of the design and construction of engines and emission related components described in the application for certification or used for certification testing into production engines is located or carried on; and,

(2) Any facility where any spark-ignition marine engines to be introduced into commerce are manufactured or assembled.

(3) Any California retail outlet where any spark-ignition marine engine is sold.

(d) On admission to any such facility referred to in this section, any ARB Enforcement Officer must be allowed:

(1) To inspect and monitor any aspects of such manufacture or assembly and other procedures;

(2) To inspect and make copies of any such records, documents or designs; and,

(3) To inspect and photograph any part or aspect of any such new spark-ignition marine engine and any component used in the assembly thereof that are reasonably related to the purpose of the ARB Enforcement Officer's entry.

(e) Any ARB Enforcement Officer must be furnished by those in charge of a facility being inspected with such reasonable assistance as may be necessary to discharge any function listed in this section. Each applicant for or recipient of certification is required to cause those in charge of a facility operated for its benefit to furnish such reasonable assistance without charge to the ARB irrespective of whether or not the applicant controls the facility.

(f) The duty to admit or cause to be admitted any ARB Enforcement Officer applies whether or not the applicant owns or controls the facility in question and applies both to domestic and foreign engine manufacturers and facilities. The ARB will not attempt to make any inspections that it has been informed that local law forbids. However, if local law makes it impossible to insure the accuracy of data generated at a facility, no informed judgment that an engine is certifiable or is covered by an Executive Order can properly be based on the data. It is the responsibility of the engine manufacturer to locate its testing and manufacturing facilities in jurisdictions where this situation will not arise.

(g) For purposes of this section:

(1) "Presentation of credentials" means a display of a document designating a person to be an ARB Enforcement Officer.
(2) Where engine, component, or engine storage areas or facilities are concerned, "operating hours" means all times during which personnel are at work in the vicinity of the area or facility and have access to it.
(3) Where facilities or areas other than those covered by paragraph (g)(2) of this section are concerned, "operating hours" means all times during which an assembly line is in operation or during which testing, maintenance, break-in procedure, production or compilation of records, or any other procedure or activity is being conducted related to certification testing, translation of designs from the test stage to the production stage, or engine manufacture or assembly.
(4) "Reasonable assistance" includes, but is not limited to, providing clerical, copying, interpretation and translation services; making personnel available upon request to inform the ARB Enforcement Officer of how the facility operates and to answer questions; and performing requested emissions tests on any engine that is being, has been, or will be used for certification testing. Such tests must be nondestructive, but may require appropriate break-in. Upon written request from the Executive Officer for the appearance of any employee of a facility, and service of such request upon the engine manufacturer, the ARB may compel an engine manufacturer to cause the personal appearance of any employee at such a facility before an ARB Enforcement Officer~~,~~. Any such employee who has been instructed by the engine manufacturer to appear will be entitled to be accompanied, represented, and advised by counsel.

32. Denial, Revocation, or Suspension of Certification.

(a) Notwithstanding the fact that any engine(s) tested for certification may comply with the provisions set forth herein, the Executive Officer may withhold or deny the issuance of an Executive Order (or suspend or revoke any such Executive Order that has been issued) with respect to any such engine(s) if:
(1) The engine manufacturer submits false or incomplete information in its application for certification; or,
(2) The engine manufacturer renders inaccurate or invalid any test data that it submits pertaining to the certification or otherwise circumvents the intent of section 43013 of the California Clean Air Act or of these provisions with respect to such engine; or,
(3) Any ARB Enforcement Officer is denied access on the terms specified in section 31 to any facility that contains any of the following:
(i) The engine;
(ii) Any components used or considered for use in its modification or build-up into a certification engine;
(iii) Any production engine that is or will be claimed by the engine manufacturer to be covered by the certificate;

(iv) Any step in the construction of an engine described in paragraph (c) of this section;

(v) Any records, documents, reports, or histories required by this Part to be kept concerning any of the above.

(4) Any ARB Enforcement Officer is denied "reasonable assistance" in examining any of the items listed in paragraph (a)(3) of this section.

(b) The sanctions of withholding, denying, revoking, or suspending of an Executive Order may be imposed for the reasons in paragraph (a) of this section only when the infraction is substantial.

(c) In any case in which an engine manufacturer knowingly submits false or inaccurate information, or knowingly renders inaccurate or in valid any test data, or commits any fraudulent acts and such acts contribute substantially to the Executive Officer decision to issue an order, the Executive Officer may deem such Executive Order void ab initio.

(d) In any case in which certification of an engine is proposed to be withheld, denied, revoked, or suspended under paragraph (a)(3) or (4) of this section, and in which the Executive Officer has presented to the engine manufacturer involved reasonable evidence that a violation of section 31 has occurred, the engine manufacturer, will have the burden of establishing any contention to the satisfaction of the Executive Officer, that even though the violation occurred, the engine in question was not involved to such a degree that would warrant withholding, denial, revocation, or suspension of certification under either paragraph (a)(3) or (4) of this section.

(e) Any revocation or suspension of certification under paragraph (a) of this section may also subject the manufacturer to penalties to the extent permissible under Part 5, Division 26 of the Health and Safety Code.

33. Adjudicatory Hearing.

Parties affected by an Executive Officer's determination, may file for an adjudicatory hearing pursuant to Subchapter 1.25, Title 17, California Code of Regulations. The provisions of Subchapter 1.25, Title 17, California Code of Regulations, apply fully to filings made under these provisions.

Part II. Spark-Ignition Marine Engines - Determination of Deterioration Factors.

1. Definitions.

The definitions in Part I, section 2 apply to this Part.

2. Acronyms and Abbreviations.

The acronyms and abbreviations in Part I, section 3 apply to this Part.

3. Deterioration Factor.

(a) The manufacturer must determine the deterioration factor for each engine family and pollutant based on good engineering judgment and/or test data. This deterioration factor must be based on the designated useful life of the engine family.

(b) For SI marine engines not utilizing aftertreatment technology (e.g., catalytic converters, exhaust gas recirculation), the sum of the exhaust emission results from each test engine added to the deterioration factor is the emissions certification value for that engine family and pollutant. If the deterioration factor is less than zero, it is considered zero for the purposes of this Part.

(c) For SI marine engines utilizing aftertreatment technology (e.g., catalytic converters, exhaust gas recirculation), the product of the exhaust emission results from each test engine multiplied by the deterioration factor is the emissions certification value for that engine family and pollutant. If the deterioration factor is less than one, it is considered to be one for the purposes of this Part.

Part III. Emission Test Equipment Provisions.

1. Scope; Applicability.

(a) This Part describes the equipment required to perform exhaust emission tests on new spark-ignition marine engines subject to the provisions of Part I, section 1.

(b) Exhaust gases are sampled while the test engine is operated using a steady state test cycle on an engine dynamometer. Exhaust gas sampling may be performed using either the raw gas sampling method or the constant volume sampling (CVS) method. The exhaust gases receive specific component analysis determining concentration of pollutants, exhaust volume, temperature, the fuel flow, and the power output during each mode. Emissions are reported on a gram per brake-kilowatt hour (g/kW-hr). See Part IV for a complete description of the test procedure.

2. Definitions.

The definitions in Part I, section 2 apply to this Part.

3. Acronyms and Abbreviations.

The acronyms and abbreviations in Part I, section 3 apply to this Part.

4. Test Equipment Overview.

(a) All engines subject to this Part are tested for exhaust emissions. Engines are operated on dynamometers meeting the specification given in section 5.

(b) The exhaust is tested for gaseous emissions using either a constant volume sampling (CVS) system as described in Part IV, section 14, or using the raw gas sampling system as described in Part IV, section 21. Both systems require analyzers (see paragraph (c) of this section) specific to the pollutant being measured.

(c) Analyzers used are a non-dispersive infrared detector (NDIR) absorption type for carbon monoxide and carbon dioxide analysis; paramagnetic detector (PMD), zirconia (ZRDO), or electrochemical type (ECS) for oxygen analysis; a flame ionization detector (FID) or heated flame ionization detector (HFID) type for hydrocarbon analysis; and a chemiluminescent detector (CLD) or heated chemiluminescent detector (HCLD) for oxides of nitrogen analysis.

5. Dynamometer Specifications and Calibration Accuracy.

(a) Dynamometer specifications.

(1) The dynamometer test stand and other instruments for measurement of engine speed and torque must meet the accuracy requirements shown in Table 1 in Appendix A to this Part. The dynamometer must be capable of performing the test cycle described in Part I, section 20.

(b) Dynamometer calibration accuracy.

(1) The dynamometer test stand and other instruments for measurement of engine torque and speed must meet the calibration frequency shown in Table 1 in Appendix A to this Part.

(2) A minimum of three calibration weights for each range used is required. The weights must be equally spaced and traceable to within 0.5 percent of National Institute of Standards and Testing (NIST) weights. Laboratories located in foreign countries may certify calibration weights to local government bureau standards.

6. Dynamometer Torque Cell Calibration.

(a) (1) Any lever arm used to convert a weight or a force through a distance into a torque must be used in a horizontal position for horizontal shaft dynamometers (± five degrees). For vertical shaft dynamometers, a pulley system may be used to convert the dynamometer's horizontal loading into the vertical plane.

(2) Calculate the indicated torque (IT) for each calibration weight to be used by:

IT=Moment Arm (meters) X Calibration Weight (Newtons)

(3) Attach each calibration weight specified in Part III, section 5(b)(2) to the moment arm at the calibration distance determined in paragraph (a)(2) of this section. Record the power measurement equipment response (N-m) to each weight.

(4) Compare the torque value measured to the calculated torque.

(5) The measured torque must be within two percent of the calculated torque.

(6) If the measured torque is not within two percent of the calculated torque, adjust or repair the system. Repeat steps in paragraphs (a)(1) through (a)(6) of this section with the adjusted or repaired system.

(b) Option. A master load-cell or transfer standard may be used to verify the torque measurement system.

(1) The master load-cell and read out system must be calibrated with weights specified in Part III, section 5(b)(2).

(2) Attach the master load-cell and loading system.

(3) Load the dynamometer to a minimum of three equally spaced torque values as indicated by the master load-cell for each in-use range used.

(4) The in-use torque measurement must be within two percent of the torque measured by the master system for each load used. (5) If the in-use torque is not within two percent of the master torque, adjust or repair the system. Repeat steps in paragraphs (b)(2) through (b)(4) of this section with the adjusted or repaired system.

(c) Calibrated resistors may not be used for dynamometer torque transducer calibration, but may be used to span the transducer before engine testing.

(d) Other engine dynamometer system calibrations such as speed are performed as specified by the dynamometer manufacturer or as dictated by good engineering practice.

7. Engine Cooling System.

An engine cooling system is required with sufficient capacity to maintain the engine at normal operating temperatures as prescribed by the engine manufacturer. Auxiliary fan(s) may be used to maintain sufficient engine cooling during dynamometer operation.

8. Lubricating Oil and Test Fuel.

(a) Lubricating oil.

(1) Use the engine lubricating oil which meets the engine manufacturer's requirements for a particular engine and intended usage. Record the specifications of the lubricating oil used for service accumulation and the certification test.

(2) For two-stroke engines, the fuel/oil mixture ratio must be that which is recommended by the manufacturer. If the flow rate of the oil in the engine is greater than two percent of the fuel flow rate, then the oil supplied to the engine must be added to the fuel flow in the emission calculations described in Part IV, section 19 and section 26. Good engineering judgment may be used to estimate oil flow when oil injection is used.

(b) Test fuels--certification.

(1) Petroleum-based fuels. The manufacturer must use gasoline having the specifications or substantially equivalent specifications approved by the Executive Officer, as specified in Table 8-1 below for exhaust emission testing of gasoline fueled engines. As an alternative, the manufacturer may use the fuel specifications as outlined in the California Code of Regulations, Title 13, section 1960.1, and the latest amendment of the “California Exhaust Emission Standards and Test Procedures for 1988 and Subsequent Model Passenger Cars, Light-Duty Trucks, and Medium-Duty Vehicles”, incorporated herein by reference. The test fuel specification in either case should remain consistent from batch to batch. The specification range of the fuel to be used under this paragraph must be reported in accordance with Part I, section 14(b)(2)(vi).

Table 8-1 -- Test Fuel Specifications

Item	Property	Tolerance	Procedure (ASTM)[1]
Sulfur, ppm max.....	1000	.....	D 2622
Benzene, max. percent.....	1.5	.....	D 3606
RVP, psi.....	8.6	± 0.6	D 323
Octane, R+M/2.....	89.9	± 3.1	D 2699
			D 2700
IBP, °C.....	32.8	± 11.0	D 86
10% point, °C.....	53.3	±5.5	D 86
50% point, °C.....	101.7	±8.3	D 86
90% point, °C.....	160.0	±11.1	D 86
End Point, max. °C.....	212.8	.....	D 86
Phosphorus, g/l, max.....	0.02	.....	D 3231
Lead, g/l, max.....	0.02	.....	.....
Manganese, g/l, max.....	0.004	.....	.....
Aromatics, max. percent.....	35	.....	D 1319
Olefins, max. percent.....	10	.....	D 1319
Saturates, percent.....	remainder	.....	D 1319

[1] All ASTM Procedures in this table have been incorporated by reference.

(2) Alcohol-based fuels. Alcohol-based fuels must be allowed for emission test purposes when the appropriate emission standards with respect to such fuels are a part of these provisions. Such fuels must be as specified in paragraph (b)(1) above.

(c) Test fuels--service accumulation.

(1) (A) Gasoline. Unleaded gasoline representative of commercial gasoline which will be generally available through retail outlets must be used in service accumulation for spark-ignition marine engines. As an alternative, the certification test fuels specified under paragraph (b) of this section for engine service accumulation. Leaded fuel may not be used during service accumulation.

(B) The octane rating of the gasoline used may not be higher than 4.0 research octane numbers above the minimum recommended by the manufacturer and have a minimum sensitivity of 7.5 octane numbers, where sensitivity is defined as research octane number minus motor octane number.

(C) The Reid Vapor Pressure of a gasoline must be characteristic of the engine fuel during the season in which the service accumulation takes place in the outdoors, or must be characteristic of the engine fuel appropriately suited to the ambient conditions of an indoor test cell in which the entire service accumulation takes place.

(2) Alternative fuels.

(A) Liquefied petroleum gas meeting the ASTM D1835 or NGPA HD-5 specifications must be used for service accumulation.

(B) Natural gas representative of commercial natural gas that will be generally available through retail outlets must be used in service accumulation.

(d) Other fuels may be used for testing provided:

(1) They are commercially viable,

(2) Information, acceptable to the Executive Officer, is provided to show that only the designated fuel would be used in customer service;

(3) Use of a fuel listed under paragraph (b) of this section would have a detrimental effect on emissions or durability; and

(4) The Executive Officer provides written approval of the fuel specifications before the start of testing.

9. Engine Intake Air Temperature Measurement.

(a) Engine intake air temperature measurement must be made within 100 cm of the air-intake of the engine. The measurement location must be either in the supply system or in the air stream entering the engine.

(b) The temperature measurements must be accurate to within $\pm$ 2 deg.C.

10. Engine Intake Air Humidity Measurement.

This section refers to engines which are supplied with intake air other than the ambient air in the test cell (i.e., air which has been plumbed directly to the engine air intake system). For engines which use ambient test cell air for the engine intake air, the ambient test cell humidity measurement may be used.

(a) Humidity conditioned air supply. Air that has had its absolute humidity altered is considered humidity-conditioned air. For this type of intake air supply, the humidity measurements must be made within the intake air supply system, and after the humidity conditioning has taken place.

(b) Unconditioned air supply. Humidity measurements in unconditioned intake air supply must be made in the intake air stream entering the engine. Alternatively, the humidity measurements can be measured within the intake air stream entering the supply system.

11. Test Conditions.

(a) General requirements.

(1) Ambient temperature levels encountered by the test engine throughout the test sequence may not be less than 20 deg.C nor more than 30 deg.C.

(2) Calculate all volumes and volumetric flow rates at standard conditions for temperature and pressure. Use these conditions consistently throughout all calculations. Standard conditions for temperature and pressure are 25 deg.C and 101.3 kPa.

(b) Engine test conditions. Measure the absolute temperature (designated as T and expressed in Kelvin) of the engine air at the inlet to the engine and the dry atmospheric pressure (designated as p_s and expressed in kPa. Determine the parameter f according to the following provisions:

(1) Naturally aspirated and mechanically supercharged engines:

$$f = \frac{99}{P_s} \; x \; \left(\frac{T}{298}\right)^{0.7}$$

(2) Turbocharged engine with or without cooling of inlet air:

$$f = \left(\frac{99}{P_s}\right)^{0.7} \; x \; \left(\frac{T}{298}\right)^{1.5}$$

(3) For a test to be recognized as valid, the parameter f must be between the limits as shown below:

$$0.96 < f < 1.04$$

12. Analytical Gases.

(a) The shelf life of a calibration gas may not be exceeded. Record the expiration date stated by the gas supplier for each calibration gas.

(b) Pure gases. The required purity of the gases is defined by the contamination limits given in parenthesis. The following gases must be available for operation.

(1) Purified nitrogen, also referred to as "zero-grade nitrogen" (Contamination $\leq$ 1 ppm C, $\leq$ 1 ppm CO, $\leq$ 400 ppm CO_2, $\leq$ 0.1 ppm NO)

(2) Purified oxygen (Purity 99.5 percent vol O_2)

(3) Hydrogen-helium mixture (40 $\pm$2 percent hydrogen, balance helium) (Contamination $\leq$ 1 ppm C, $\leq$ 400 ppm CO)

(4) Purified synthetic air, also referred to as "zero gas" (Contamination $\leq$ 1 ppm C, $\leq$ 1 ppm CO, $\leq$ 400 ppm CO_2, $\leq$ 0.1 ppm NO) (Oxygen content between 18-21 percent vol.)

(c) Calibration and span gases.

(1) Calibration gas values are to be derived from NIST "Standard Reference Materials" (SRM's) or other local gas standards and are to be single blends as specified in this subsection.

(2) Mixtures of gases having the following chemical compositions must be available:

C_3H_8 and purified synthetic air (dilute measurements); C_3H_8 and purified nitrogen (raw measurements); CO and purified nitrogen; NOx and purified nitrogen (the amount of NO_2 contained in this calibration gas must not exceed five percent of the NO content); CO_2 and purified nitrogen.

Note: For the HFID or FID, the manufacturer may choose to use as a diluent span gas and the calibration gas either purified synthetic air or purified nitrogen. Any mixture of C_3H_8 and purified synthetic air which contains a concentration of propane higher than what a gas supplier considers to be safe may be substituted with a mixture of 8 C_3H_8 and purified nitrogen. However, the manufacturer must be consistent in the choice of diluent (zero air or purified nitrogen) between the calibration and span gases. If a manufacturer chooses to use C_3H_8 and purified nitrogen for the calibration gases, then purified nitrogen must be the diluent for the span gases.

(3) The true concentration of a span gas must be within $\pm$ two percent of the NIST gas standard. The true concentration of a calibration gas must be within $\pm$ one percent of the NIST gas standard. The use of precision blending devices (gas dividers) to obtain the required calibration gas concentrations is acceptable. Give

all concentrations of calibration gas on a volume basis (volume percent or volume ppm).

(4) The gas concentrations used for calibration and span may also be obtained by means of a gas divider, diluting with purified N_2 or with purified synthetic air. The accuracy of the mixing device must be such that the concentration of the diluted gases may be determined to within $\pm$ two percent.

(d) Oxygen interference check gases must contain propane with 350 ppmC $\pm$ 75 ppmC hydrocarbon. Determine the concentration value to calibration gas tolerances by chromatographic analysis of total hydrocarbons plus impurities or by dynamic blending. Use nitrogen as the predominant diluent with the balance oxygen.

(e) Fuel for the hydrocarbon flame ionization detector (HC-FID) must be a blend of 40$\pm$2 percent hydrogen with the balance being helium. The mixture shall contain less than one ppm equivalent carbon response; 98 to 100 percent hydrogen fuel may be used with advance approval of the Executive Officer.

(f) Hydrocarbon analyzer burner air. The concentration of oxygen must be within one mole percent of the oxygen concentration of the burner air used in the latest oxygen interference check (percent O_2I), see Part III, section 16(d). If the difference in oxygen concentration is greater than one mole percent, then the oxygen interference must be checked and the analyzer adjusted if necessary, to meet the percent O_2I requirements. The burner air must contain less than two ppmC hydrocarbon.

13. Analyzers Required.

(a) Analyzers. Analyze measured gases with the following instruments:

(1) Carbon monoxide (CO) analysis.

(i) The carbon monoxide analyzer must be of the non-dispersive infrared (NDIR) absorption type.

(ii) The use of linearizing circuits is permitted.

(2) Carbon dioxide (CO_2) analysis.

(i) The carbon dioxide analyzer must be of the non-dispersive infrared (NDIR) absorption type.

(ii) The use of linearizing circuits is permitted.

(3) Oxygen (O_2) analysis. Oxygen (O_2) analyzers may be of the paramagnetic (PMD), zirconia (ZRDO) or electrochemical type (ECS).

(4) Hydrocarbon (HC) analysis.

(i) For Raw Gas Sampling, the hydrocarbon analyzer must be of the heated flame ionization (HFID) type. For constant volume sampling, the

hydrocarbon analyzer may be of the flame ionization (FID) type or of the heated flame ionization (HFID) type.

(ii) For the HFID system, if the temperature of the exhaust gas at the sample probe is below 190 deg. C, the temperature of the valves, pipe work, and so forth, must be controlled so as to maintain a wall temperature of 190 deg. C $\pm$ 11 deg. C. If the temperature of the exhaust gas at the sample probe is above 190 deg. C, the temperature of the valves, pipe work, and so forth, must be controlled so as to maintain a wall temperature greater than 180 deg. C.

(iii) For the HFID analyzer, the detector, oven, and sample handling components within the oven must be suitable for continuous operation at temperatures to 200 deg. C. It must by capable of maintaining temperature within $\pm$ 5.5 deg. C of the set point.

(iv) Fuel and burner air must conform to the specifications in Part III, section 12.

(v) The percent of oxygen interference must be less than three percent, as specified in Part III, section 16(d).

(5) Oxides of nitrogen (NO_X) analysis.

(i) This analysis device consists of the following items:

(A) A NO_2 to NO converter. The NO_2 to NO converter efficiency must be at least 90 percent.

(B) An ice bath located after the NO_X converter (optional).

(C) A chemiluminescent detector (CLD) or heated chemiluminescent detector (HCLD).

(ii) The quench interference must be less than three percent as measured in Part III, section 25.

(b) Other gas analyzers yielding equivalent results may be used with advance approval of the Executive Officer.

(c) The following requirements must be incorporated as indicated in systems used for testing under this Part.

(1) Carbon monoxide and carbon dioxide measurements must be made on a dry basis (for raw exhaust measurement only). Specific requirements for the means of drying the sample can be found in section 13(e).

(2) Calibration or span gases for the NO_X measurement system must pass through the NO_2 to NO converter.

(d) The electromagnetic compatibility (EMC) of the equipment must be on a level as to minimize additional errors.

(e) Gas drying. Chemical dryers are not an acceptable method of removing water from the sample. Water removal by condensation is acceptable. If water is removed by condensation, the sample gas temperature or sample dew point must be monitored either within the water trap or downstream and its temperature must not exceed 7 deg.

C. A water trap performing this function is an acceptable method. Means other than condensation may be used only with prior approval from the Executive Officer.

14. Analyzer Accuracy and Specifications.

(a) Measurement accuracy--general. The analyzers must have a measuring range which allows them to measure the concentrations of the exhaust gas sample pollutants with the accuracies shown in Table 1 in Appendix A to this Part.

(1) Precision. The precision of the analyzer must be, at worst, ± one percent of full-scale concentration for each range used. The precision is defined as 2.5 times the standard deviation(s) of 10 repetitive responses to a given calibration or span gas.

(2) Noise. The analyzer peak-to-peak response to zero and calibration or span gases over any 10-second period may not exceed two percent of full-scale chart deflection on all ranges used.

(3) Zero drift. The analyzer zero-response drift during a one-hour period must be less than two percent of full-scale chart deflection on the lowest range used. The zero-response is defined as the mean response including noise to a zero-gas during a 30-second time interval.

(4) Span drift. The analyzer span drift during a one-hour period must be less than two percent of full-scale chart deflection on the lowest range used. The analyzer span is defined as the difference between the span-response and the zero-response. The span-response is defined as the mean response including noise to a span gas during a 30- second time interval.

(b) Operating procedure for analyzers and sampling system. Follow the start-up and operating instructions of the instrument manufacturer. Adhere to the minimum requirements given in Part III, sections 16 through 25 and Part IV, section 9.

(c) Emission measurement accuracy--Bag sampling.

(1) Good engineering practice dictates that exhaust emission sample analyzer readings below 15 percent of full scale chart deflection should generally not be used.

(2) Some high resolution read-out systems, such as computers, data loggers, and so forth, can provide sufficient accuracy and resolution below 15 percent of full scale. Such systems may be used provided that additional calibrations are made to ensure the accuracy of the calibration curves. The following procedure for calibration below 15 percent of full scale may be used:

Note: If a gas divider is used, the gas divider must conform to the accuracy requirements as follows: The use of precision blending devices (gas dividers) to obtain the required calibration gas concentrations is acceptable, provided that the blended gases are accurate to within ± 1.5 percent of NIST gas standards or other

gas standards which have been approved by the Executive Officer. This accuracy implies that primary gases used for blending must be “named” to an accuracy of at least ± 1 percent, traceable to NIST or other approved gas standards.

(i) Span the full analyzer range using a top range calibration gas. The span gases must be accurate to within ± 2 percent of NIST gas standards or other gas standards which have been approved by the Executive Officer.

(ii) Generate a calibration curve according to, and meeting the requirements of the sections describing analyzer calibrations which are found in sections 16, 17, 18, and 20 of this Part.

(iii) Select a calibration gas (a span gas may be used for calibrating the CO_2 analyzer) with a concentration between the two lowest non-zero gas divider increments. This gas must be “named” to an accuracy of ± 2 percent of NIST gas standards, or other standards approved by the Executive Officer.

(iv) Using the calibration curve fitted to the points generated in paragraphs (c)(2)(i) and (ii) of this section, check the concentration of the gas selected in paragraph (c)(2)(iii) of this section. The concentration derived from the curve must be within ± 2.3 percent (± 2.8 percent for CO_2 span gas) of the gas' original named concentration.

(v) Provided the requirements of paragraph (c)(2)(iv) of this section are met, use the gas divider with the gas selected in paragraph (c)(2)(iii) of this section and determine the remainder of the calibration points. Fit a calibration curve per sections 16, 17, 18, and 20 of this chapter for the entire analyzer range.

(d) Emission measurement accuracy--continuous sampling. Analyzers used for continuous analysis must be operated such that the measured concentration falls between 15 and 100 percent of full scale chart deflection. Exceptions to these limits are:

(1) The analyzer's response may be less than 15 percent or more than 100 percent of full scale if automatic range change circuitry is used and the limits for range changes are between 15 and 100 percent of full scale chart deflection;

(2) The analyzer's response may be less than 15 percent of full scale if:

(i) Alternative in paragraph (c)(2) of this section is used to ensure that the accuracy of the calibration curve is maintained below 15 percent; or

(ii) The full scale value of the range is 155 ppmC or less; or

(iii) The emissions from the engine are erratic and the integrated chart deflection value for the cycle is greater than 15 percent of full scale; or

(iv) The contribution of all data read below the 15 percent level is less than 10 percent by mass of the final test results.

15. Analyzer Initial Calibration.

(a) Warming-up time. Follow the warm-up time according to the recommendations of the manufacturer. If not specified, a minimum of two hours should be allowed for warming up the analyzers.

(b) NDIR and HFID analyzer. Tune and maintain the NDIR analyzer per the instrument manufacturer recommendations. The combustion flame of the HFID analyzer must be optimized in order to meet the specifications in Part III, section 16(b).

(c) Zero setting and calibration. Using purified synthetic air (or nitrogen), set the CO, CO_2, NO_X and HC analyzers at zero. Connect the appropriate calibrating gases to the analyzers and record the values. The same gas flow rates shall be used as when sampling exhaust.

(d) Rechecking of zero setting. Recheck the zero setting and, if necessary, repeat the procedure described in paragraph (c) of this section.

16. Hydrocarbon Analyzer Calibration.

(a) Calibrate the FID and HFID hydrocarbon analyzer as described in this section. Operate the HFID to a set point $\pm$ 5.5 deg.C between 185 and 197 deg.C.

(b) Initial and periodic optimization of detector response. Prior to introduction into service and at least annually thereafter, adjust the FID and HFID hydrocarbon analyzer for optimum hydrocarbon response as specified by this paragraph. Alternative methods yielding equivalent results may be used, if approved in advance by the Executive Officer.

(1) Follow good engineering practices for initial instrument startup and basic operating adjustment using the appropriate fuel (see Part III, section 12) and purified synthetic air or zero-grade nitrogen.

(2) One of the following procedures is required for FID or HFID optimization:

(i) The procedure outlined in Society of Automotive Engineers (SAE) paper No. 770141, “Optimization of Flame Ionization Detector for Determination of Hydrocarbons in Diluted Automobile Exhaust”; author, Glenn D. Reschke. This procedure has been incorporated by reference.

(ii) The HFID optimization procedures outlined in Title 40, Code of Federal Regulations, section 86.331-79 [July 1, 1997], incorporated herein by reference.

(iii) Alternative procedures may be used if approved in advance by the Executive Officer.

(3) After the optimum flow rates have been determined, they are recorded for future reference.

(c) Initial and periodic calibration. Prior to introduction into service and monthly thereafter, or within one month before the certification test, calibrate the FID or HFID hydrocarbon analyzer on all normally used instrument ranges, using the steps in this

paragraph. Use the same flow rate and pressures as when analyzing samples. Introduce calibration gases directly at the analyzer.

(1) Adjust analyzer to optimize performance.
(2) Zero the hydrocarbon analyzer with purified synthetic air or zero-grade nitrogen.
(3) Calibrate on each used operating range with calibration gases having nominal concentrations between 10 and 90 percent of that range. A minimum of six evenly spaced points covering at least 80 percent of the 10 to 90 percent range (64 percent) is required (see following table).

Example calibration points (percent)	Acceptable for calibration?
20, 30, 40, 50, 60, 70.....	No, range covered is 50 percent, not 64 percent
20, 30, 40, 50, 60, 70, 80, 90.....	Yes.
10, 25, 40, 55, 70, 85.....	Yes.
10, 30, 50, 70, 90.....	No, though equally spaced and entire range covered, a minimum of six points is needed.

(4) For each range calibrated, if the deviation from a least squares best-fit straight line is two percent or less of the value at each data point, calculate concentration values by use of a single calibration factor for that range. If the deviation exceeds two percent at any point, use the best-fit non-linear equation which represents the data to within two percent of each test point to determine concentration.

(d) Oxygen interference optimization. Choose a range where the oxygen interference check gases will fall in the upper 50 percent. Conduct the test, as outlined in this paragraph, with the oven temperature set as required by the instrument manufacturer. Oxygen interference check gas specifications are found in Part III, section 12(d).

(1) Zero the analyzer.
(2) Span the analyzer with the 21 percent oxygen blend.
(3) Recheck zero response. If it has changed more than 0.5 percent of full scale repeat paragraphs (d)(1) and (d)(2) of this section to correct the problem.
(4) Introduce the five percent and 10 percent oxygen interference check gases.
(5) Recheck the zero response. If it has changed more than ± one percent of full scale, repeat the test.
(6) Calculate the percent of oxygen interference (designated as percent O_2I) for each mixture in paragraph (d)(4) of this section according to the following equation:

$$percent\ O_2I = \frac{B\ Analyzer\ response\ (ppmC)}{B}\ x\ (100)$$

Where:

A = hydrocarbon concentration (ppmC) of the span gas used in paragraph (d)(2)

$$analyzer\ response = \left(\frac{A}{\%\ of\ fullscale\ analyzer\ response\ (A)}\right)$$

$$x\ (\%\ of\ fullscale\ analyzer\ response\ (B))$$

of this section.

B = hydrocarbon concentration (ppmC) of the oxygen interference check gases used in paragraph (d)(4) of this section.

(7) The percent of oxygen interference (designated as percent O_2I) must be less than ± three percent for all required oxygen interference check gases before testing.

(8) If the oxygen interference is greater than the specifications, incrementally adjust the air flow above and below the manufacturer's specifications, repeating paragraphs (d)(1) through (d)(7) of this section for each flow.

(9) If the oxygen interference is greater than the specification after adjusting the air flow, vary the fuel flow and thereafter the sample flow, repeating paragraphs (d)(1) through (d)(7) of this section for each new setting.

(10) If the oxygen interference is still greater than the specifications, repair or replace the analyzer, FID fuel, or burner air before testing. Repeat this section with the repaired or replaced equipment or gases.

17. Carbon Monoxide Analyzer Calibration.

(a) Calibrate the NDIR carbon monoxide analyzer described in this section.

(b) Initial and periodic interference check. Prior to its introduction into service and annually thereafter, check the NDIR carbon monoxide analyzer for response to water vapor and CO_2:

(1) Follow good engineering practices for instrument start-up and operation. Adjust the analyzer to optimize performance on the most sensitive range to be used.

(2) Zero the carbon monoxide analyzer with either purified synthetic air or zero-grade nitrogen.

(3) Bubble a mixture of three percent CO_2 in N_2 through water at room temperature and record analyzer response.

(4) An analyzer response of more than one percent of full scale for ranges above 300 ppm full scale or more than three ppm on ranges below 300 ppm full scale requires

corrective action. (Use of conditioning columns is one form of corrective action which may be taken.)

(c) Initial and periodic calibration. Calibrate the NDIR carbon monoxide analyzer before its introduction into service and monthly thereafter.

(1) Adjust the analyzer to optimize performance.

(2) Zero the carbon monoxide analyzer with either purified synthetic air or zero-grade nitrogen.

(3) Calibrate on each used operating range with carbon monoxide-in N_2 calibration gases having nominal concentrations between 10 and 90 percent of that range. A minimum of six evenly spaced points covering at least 80 percent of the 10 to 90 range (64 percent) is required (see following table).

Example calibration points (percent)	Acceptable for calibration?
20, 30, 40, 50, 60, 70.....	No, range covered is 50 percent, not 64 percent
20, 30, 40, 50, 60, 70, 80, 90.....	Yes.
10, 25, 40, 55, 70, 85.....	Yes.
10, 30, 50, 70, 90.....	No, though equally spaced and entire range covered, a minimum of six points is needed.

(4) Additional calibration points may be generated. For each range calibrated, if the deviation from a least-squares best-fit straight line is two percent or less of the value at each data point, concentration values may be calculated by use of a single calibration factor for that range. If the deviation exceeds two percent at any point, use the best-fit non-linear equation which represents the data to within two percent of each test point to determine concentration.

18. Oxides of Nitrogen Analyzer Calibration.

(a) Calibrate the chemiluminescent oxides of nitrogen analyzer as described in this section.

(b) Initial and periodic interference. Prior to its introduction into service, and monthly thereafter, check the chemiluminescent oxides of nitrogen analyzer for NO_2 to NO converter efficiency. Figure 2 in Appendix B of this Part is a reference for the following paragraphs:

(1) Follow good engineering practices for instrument start-up and operation. Adjust the analyzer to optimize performance.

(2) Zero the oxides of nitrogen analyzer with purified synthetic air or zero-grade nitrogen.

(3) Connect the outlet of the NO_X generator to the sample inlet of the oxides of nitrogen analyzer which has been set to the most common operating range.

(4) Introduce into the NO_X generator analyzer-system an NO-in-nitrogen (N_2) mixture with an NO concentration equal to approximately 80 percent of the most common operating range. The NO_2 content of the gas mixture must be less than 5 percent of the NO concentration.

(5) With the oxides of nitrogen analyzer in the NO mode, record the concentration of NO indicated by the analyzer.

(6) Turn on the NO_X generator O_2 (or air) supply and adjust the O_2 (or air) flow rate so that the NO indicated by the analyzer is about 10 percent less than indicated in paragraph (b)(5) of this section. Record the concentration of NO in this NO+O_2 mixture as value “c."

(7) Switch the NO_X generator to the generation mode and adjust the generation rate so that the NO measured on the analyzer is 20 percent of that measured in paragraph (b)(5) of this section. There must be at least 10 percent unreacted NO at this point. Record the concentration of residual NO as value “d.”

(8) Switch the oxides of nitrogen analyzer to the NO_X mode and measure total NO_X. Record this value as “a.”

(9) Switch off the NO_X generator but maintain gas flow through the system. The oxides of nitrogen analyzer will indicate the NO_X in the NO+O_2 mixture. Record this value as “b."

(10) Turn off the NO_X generator O_2 (or air) supply. The analyzer will now indicate the NO_X in the original NO-in-N_2 mixture. This value should be no more than 5 percent above the value indicated in paragraph (b)(4) of this section.

(11) Calculate the efficiency of the NO_X converter by substituting the concentrations obtained into the following equation:

$$percent\ efficiency = (1 + \frac{ab}{cd})\ x\ 100$$

Where:

a = concentration obtained in paragraph (b)(8) of this section,

b = concentration obtained in paragraph (b)(9) of this section,

c = concentration obtained in paragraph (b)(6) of this section,

d = concentration obtained in paragraph (b)(7) of this section.

If converter efficiency is not greater than 90 percent, corrective action is required.

(c) Initial and periodic calibration. Prior to its introduction into service, and monthly thereafter, calibrate the chemiluminescent oxides of nitrogen analyzer on all normally used instrument ranges. Use the same flow rate as when analyzing samples. Proceed as follows:

(1) Adjust analyzer to optimize performance.

(2) Zero the oxides of nitrogen analyzer with zero-grade air or zero-grade nitrogen.

(3) Calibrate on each normally used operating range with NO-in-N_2 calibration gases with nominal concentrations between 10 and 90 percent of that range. A minimum of six evenly spaced points covering at least 80 percent of the 10 to 90 percent range (64 percent) is required (see following table).

Example calibration points (percent)	Acceptable for calibration?
20, 30, 40, 50, 60,70.....	No, range covered is 50 percent, not 64 percent
20, 30, 40, 50, 60, 70, 80, 90.....	Yes.
10, 25, 40, 55, 70, 85.....	Yes.
10, 30, 50, 70, 90.....	No, though equally spaced and entire range covered, a minimum of six points is needed.

(4) Additional calibration points may be generated. For each range calibrated, if the deviation from a least-squares best-fit straight line is two percent or less of the value at each data point, concentration values may be calculated by use of a single calibration factor for that range. If the deviation exceeds two percent at any point, use the best-fit non-linear equation which represents the data to within two percent of each test point to determine concentration.

19. NO_X Converter Check.

(a) The efficiency of the converter used for the conversion of NO_2 to NO is tested as given in paragraphs (a)(1) through (a)(8) of this section (see Figure 2 in Appendix B to this Part).

(1) Using the test setup as shown in Figure 2 in Appendix B to this Part (see also Part III, section 18 of this chapter) and the procedures described in paragraphs (a)(2) through (a)(8) of this section, test the efficiency of converters by means of an ozonator.

(2) Calibrate the HCLD in the most common operating range following the manufacturer's specifications using zero and span gas (the NO content of which must amount to about 80 percent of the operating range and the NO_2 concentration of the gas mixture less than five percent of the NO concentration). The NO_X analyzer must be in the NO mode so that the span gas does not pass through the converter. Record the indicated concentration.

(3) Calculate the efficiency of the NO_X converter as described in Part III, section 18(b).

(4) Via a T-fitting, add oxygen continuously to the gas flow until the concentration indicated is about 20 percent less than the indicated calibration concentration given in paragraph (a)(2) of this section. Record the indicated concentration as “c.” The ozonator is kept deactivated throughout the process.

(5) Activate the ozonator to generate enough ozone to bring the NO concentration down to about 20 percent (minimum 10 percent) of the calibration concentration given in paragraph (a)(2) of this section. Record the indicated concentration as “d.” Note that if, with the analyzer in the most common range the NO_X converter cannot give a reduction from 80 percent to 20 percent, then use the highest range which will give the reduction.

(6) Switch the NO analyzer to the NO_X mode, which means that the gas mixture (consisting of NO, NO_2, O_2 and N_2) now passes through the converter. Record the indicated concentration as “a”.

(7) Deactivate the ozonator. The mixture of gases described in paragraph (a)(6) of this section passes through the converter into the detector. Record the indicated concentration as “b”.

(8) Switched to NO mode with the ozonator deactivated, the flow of oxygen or synthetic air is also shut off. The NO_X reading of the analyzer may not deviate by more than $\pm$ five percent of the theoretical value of the figure given in paragraph (a)(2) of this section.

(b) The efficiency of the converter must be tested before each calibration of the NO_X analyzer.

(c) The efficiency of the converter may not be less than 90 percent.

20. Carbon Dioxide Analyzer Calibration.

(a) Prior to its introduction into service, and monthly thereafter, or within one month before the certification test, calibrate the NDIR carbon dioxide analyzer as follows:

(1) Follow good engineering practices for instrument start-up and operation. Adjust the analyzer to optimize performance.

(2) Zero the carbon dioxide analyzer with either purified synthetic air or zero-grade nitrogen.

(3) Calibrate on each normally used operating range with carbon dioxide-in-N_2 calibration or span gases having nominal concentrations between 10 and 90 percent of that range. A minimum of six evenly spaced points covering at least 80 percent of the 10 to 90 percent range (64 percent) is required (see following table).

Example calibration points (percent)	Acceptable for calibration?
20, 30, 40, 50, 60,70.....	No, range covered is 50 percent, not 64 percent
20, 30, 40, 50, 60, 70, 80, 90.....	Yes.
10, 25, 40, 55, 70, 85.....	Yes.
10, 30, 50, 70, 90.....	No, though equally spaced and entire range covered, a minimum of six points is needed.

(4) Additional calibration points may be generated. For each range calibrated, if the deviation from a least-squares best-fit straight line is two percent or less of the value at each data point, concentration values may be calculated by use of a single calibration factor for that range. If the deviation exceeds two percent at any point, use the best-fit non-linear equation which represents the data to within two percent of each test point to determine concentration.

21. NDIR Analyzer Calibration.

(a) Detector optimization. If necessary, follow the manufacturer's instructions for initial start-up and basic operating adjustments.

(b) Calibration curve. Develop a calibration curve for each range used as follows:

(1) Zero the analyzer.

(2) Span the analyzer to give a response of approximately 90 percent of full-scale chart deflection.

(3) Recheck the zero response. If it has changed more than 0.5 percent of full scale, repeat the steps given in paragraphs (b)(1) and (b)(2) of this section.

(4) Record the response of calibration gases having nominal concentrations between 10 and 90 percent of full-scale concentration. A minimum of six evenly spaced points covering at least 80 percent of the 10 to 90 percent range (64 percent) is required (see following table).

Example calibration points (percent)	Acceptable for calibration?
20, 30, 40, 50, 60,70.....	No, range covered is 50 percent, not 64 percent
20, 30, 40, 50, 60, 70, 80, 90.....	Yes.
10, 25, 40, 55, 70, 85.....	Yes.
10, 30, 50, 70, 90.....	No, though equally spaced and entire range covered, a minimum of six points is needed.

(5) Generate a calibration curve. The calibration curve must be of fourth order or less, have five or fewer coefficients, and be of the form of equation (1) or (2). Include zero as a data point. Compensation for known impurities in the zero gas can be made to the zero-data point. The calibration curve must fit the data points within two percent of point or one percent of full scale, whichever is less.

$$y = Ax^4 + Bx^3 + Cx^2 + Dx + E \qquad (1)$$

$$y = \frac{x}{Ax^4 + Bx^3 + Cx^2 + Dx + E} \qquad (2)$$

y = concentration

x = chart deflection

(6) Option. A new calibration curve need not be generated if:

(i) A calibration curve conforming to paragraph (b)(5) of this section exists;

(ii) The responses generated in paragraph (b)(4) of this section are within one percent of full scale or two percent of point, whichever is less, of the

responses predicted by the calibration curve for the gases used in paragraph (b)(4) of this section.

(7) If multiple range analyzers are used, the lowest range used must meet the curve fit requirements below 15 percent of full scale.

(c) Linear calibration criteria. If any range is within two percent of being linear, a linear calibration may be used. To determine if this criterion is met:

(1) Perform a linear least-square regression on the data generated. Use an equation of the form y=mx, where x is the actual chart deflection and y is the concentration.

(2) Use the equation z=y/m to find the linear chart deflection (designated as z) for each calibration gas concentration (designated as y).

(3) Determine the linearity (designated as percent L) for each calibration gas by:

$$percent\ L = \frac{(zx)}{Fullscale\ linear\ chart\ deflection}(100)$$

(4) The linearity criterion is met if the percent L is less than ± two percent for each data point generated. For each emission test, use a calibration curve of the form y=mx. The slope (designated as m) is defined for each range by the spanning process.

22. Calibration of Other Equipment.

Calibrate other test equipment as often as required by the test equipment manufacturer or as necessary according to good engineering practice.

23. Analyzer Bench Checks.

(a) Prior to initial use and after major repairs, verify that each analyzer complies with the specifications given in Table 1 to this Part.

(b) If a stainless steel NO_2 to NO converter is used, condition all new or replacement converters. The conditioning consists of either purging the converter with air for a minimum of four hours or until the converter efficiency is greater than 90 percent. The converter must be at operational temperature while purging. Do not use this procedure before checking converter efficiency on in-use converters.

24. Analyzer Leakage Check.

(a) Vacuum side leak check.

(1) Check any location within the analysis system where a vacuum leak could affect the test results.

(2) The maximum allowable leakage rate on the vacuum side is 0.5 percent of the in-use flow rate for the portion of the system being checked. The analyzer flows and bypass flows may be used to estimate the in-use flow rates.

(3) The sample probe and the connection between the sample probe and valve V2 (see Figure 1 in Appendix A of this Part) may be excluded from the leak check.

(b) Pressure side leak check. Substantial leaks of the sample on the pressure side of the system may impact sample integrity if the leaks are of sufficient magnitude. As a safety precaution, it is good engineering practice to perform periodic pressure side leak checks on the sampling system.

25. Analyzer Interference Checks.

(a) Gases present in the exhaust other than the one being analyzed can interfere with the reading in several ways. Positive interference occurs in NDIR and PMD instruments when the interfering gas gives the same effect as the gas being measured, but to a lesser degree. Negative interference occurs in NDIR instruments by the interfering gas broadening the absorption band of the measured gas, and in CLD instruments by the interfering gas quenching the radiation. The interference checks described in this section are to be made initially and after any major repairs that could affect analyzer performance.

(b) CO analyzer water and CO_2 interference checks. Bubble through water at room temperature a CO_2 span gas having a concentration of between 80 percent and 100 percent inclusive of full scale of the maximum operating range used during testing and record the analyzer response. For dry measurements, this mixture may be introduced into the sample system before the water trap. The analyzer response must not be more than one percent of full scale for ranges equal to or above 300 ppm or more than three ppm for ranges below 300 ppm.

(c) NO_X analyzer quench check. The two gases of concern for CLD (and HCLD) analyzers are CO_2 and water vapor. Quench responses to these two gases are proportional to their concentrations and, therefore, require test techniques to determine quench at the highest expected concentrations experienced during testing.

(1) NO_X analyzer CO_2 quench check.

(i) Pass a CO_2 span gas having a concentration of 80 percent to 100 percent of full scale of the maximum operating range used during testing through the CO_2 NDIR analyzer and record the value as “a.”

(ii) Dilute the CO_2 span gas approximately 50 percent with NO span gas and pass through the CO_2 NDIR and CLD (or HCLD). Record the CO_2 and NO values as “b” and “c”, respectively.

(iii) Shut off the CO_2 and pass only the NO span gas through the CLD (or HCLD). Record the NO value recorded as “d.”

(iv) Calculate the percent CO_2 quench as follows, which may not exceed three percent:

$$percent\ CO_2\ quench = 100\ x\ (1\ \frac{(c\ x\ a)}{(d\ x\ a)(d\ x\ b)})\ x\ (a\ /\ b)$$

Where:

a = Undiluted CO_2 concentration (percent)

b = Diluted CO_2 concentration (percent)

c = Diluted NO concentration (ppm)
d = Undiluted NO concentration (ppm)

(2) NO_X analyzer water quench check.

(i) This check applies to wet measurements only. Pass an NO span gas having a concentration of 80 percent to 100 percent of full scale of a normal operating range through the CLD (or HCLD). Record the response as “D.” Bubble through water at room temperature the NO span gas and pass it through the CLD (or HCLD). Record the analyzers response as “AR.” Determine and record the analyzers absolute operating pressure and the bubbler water temperature. (It is important that the NO span gas contains minimal NO_2 concentration for this check. No allowance for absorption of NO_2 in water has been made in the following quench calculations.)

(ii) Calculations for water quench must consider dilution of the NO span gas with water vapor and scaling of the water vapor concentration of the mixture to that expected during testing. Determine the mixture's saturated vapor pressure (designated as “Pwb”) that corresponds to the bubbler water temperature. Calculate the water concentration (“Z1", percent) in the mixture by the following equation:

$$Z1=100\ x\ (Pwb/GP)$$

Where:

GP = the analyzer's standard operating pressure (pascals)

(iii) Calculate the expected dilute NO span gas and water vapor mixture concentration (designated as “D1") by the following equation:

$$D1=D \times (1Z1/100)$$

26. Pre- and Post-test Analyzer Calibration.

Calibrate the operating range of each analyzer used during the test before and after each test in accordance with the following procedure (A chronic need for parameter adjustment can indicate a need for instrument maintenance.):

(a) Make the calibration using a zero gas and a span gas whose nominal value is between 80 percent and 100 percent of full scale, inclusive, of the measuring range.
(b) Use the same analyzer(s) flow rate and pressure as that used during exhaust emission test sampling.
(c) Warm-up and stabilize the analyzer(s) before the calibration is made.
(d) If necessary, clean and/or replace filter elements before calibration is made.
(e) Calibrate analyzer(s) as follows:

(1) Zero the analyzer using the appropriate zero gas. Adjust analyzer zero if necessary. Zero reading should be stable.

(2) Span the analyzer using the appropriate span gas for the range being calibrated. Adjust the analyzer to the calibration set point if necessary.
(3) Recheck zero and span set points.

(4) If the response of the zero gas or span gas differs more than one percent of full scale, then repeat paragraphs (e)(1) through (3) of this section.

27. Sampling System Requirements.

(a) Sample component surface temperature. For sampling systems which use heated components, use engineering judgment to locate the coolest portion of each component (pump, sample line section, filters, and so forth) in the heated portion of the sampling system that has a separate source of power or heating element. Monitor the temperature at that location. If several components are within an oven, then only the surface temperature of the component with the largest thermal mass and the oven temperature need be measured.

(b) If water is removed by condensation, monitor the sample gas temperature or sample dew point either within the water trap or downstream. It may not exceed 7 deg.C.

28. Measurement Equipment Accuracy/Calibration Frequency Table.

(a) The accuracy of measurements must be such that the maximum tolerances shown in Table 1 in Appendix A to this Part are not exceeded.

(b) Calibrate all equipment and analyzers according to the frequencies shown in Table 1 in Appendix A to this Part.

(c) Prior to initial use and after major repairs, bench check each analyzer (see Part III, section 23).

(d) Calibrate as specified in Part III, section 6 and sections 15 through 22.

(e) At least monthly, or after any maintenance which could alter calibration, perform the following calibrations and checks.

(1) Leak check the vacuum side of the system (see Part III, section 24(a)).

(2) Verify that the automatic data collection system (if used) meets the requirements found in Table 1 in Appendix A of this Part.

(3) Check the fuel flow measurement instrument to insure that the specifications in Table 1 in Appendix A to this Part are met.

(f) Verify that all NDIR analyzers meet the water rejection ratio and the CO_2 rejection ratio as specified in Part III, section 25.

(g) Verify that the dynamometer test stand and power output instrumentation meet the specifications in Table 1 in Appendix A to this Part.

29. Catalyst Thermal Stress Test.

(a) Oven characteristics. The oven used for thermally stressing the test catalyst must be capable of maintaining a temperature of 500 deg.C $\pm$ 5 deg.C and 1000 deg.C10 deg.C.

(b) Evaluation gas composition.

(1) A synthetic exhaust gas mixture is used for evaluating the effect of thermal stress on catalyst conversion efficiency.

(2) The synthetic exhaust gas mixture must have the following composition:

Constituent	Volume Percent	Parts per million
Carbon Monoxide[1]	1	.....
Oxygen	1.3	.....
Carbon Dioxide	9	.....
Water Vapor	10	.....
Sulfur Dioxide	.....	20
Oxides of Nitrogen	.....	280
Hydrogen	.....	3500
Hydrocarbon [1,2]	.....	4000
Nitrogen=Balance	.....	.....

[1] Alternatively, the carbon monoxide and hydrocarbon proportions of the mixture may be changed to 1.2% and 4650 ppm, respectively (using one of these concentrations requires that the other be used simultaneously.

[2] Propylene/propane ratio = 2/1

Appendix A to Part III

Table 1 -- Measurement Accuracy Calibration Frequency

No.	Item	Permissible deviation from reading[1]		Calibration frequency
		non-idle	idle	
1.....	Engine speed.....	± 2%.....	± 2%.....	Monthly.
2.....	Torque.....	± 5%.....	.....	Monthly.
3.....	Fuel consumption.....	± 1%.....	± 5%.....	Monthly.
4.....	Air consumption.....	± 2%.....	± 5%.....	As required.
5.....	Coolant temperature.....	± 2°C.....	Same.....	As required.
6.....	Lubricant temperature.....	± 2°C.....	Same.....	As required.
7.....	Exhaust backpressure.....	± 5%.....	Same.....	As required.
8.....	Inlet depression.....	± 5%.....	Same.....	As required.
9.....	Exhaust gas temperature.....	± 15%.....	Same.....	As required.
10.....	Air inlet temperature (combustion air).....	± 2°C.....	Same.....	As required.
11.....	Atmospheric pressure.....	± 0.5%.....	Same.....	As required.
12.....	Humidity (combustion air) (relative).....	± 3.0%.....	Same.....	As required.
13.....	Fuel temperature.....	± 2°C.....	Same.....	As required.
14.....	Temperature with regard to dilution system.....	± 2°C.....	Same.....	As required.
15.....	Dilution air humidity.....	± 3% absolute.	Same.....	As required.
16.....	HC analyzer.....	± 2%[2].....	Same.....	Monthly.
17.....	CO analyzer.....	± 2%[2]	Same.....	Monthly.
18.....	NOx analyzer.....	± 2%[2].....	Same.....	Monthly.
19.....	NOx converter check.....	90%.....	Same.....	Monthly.
20.....	CO_2 analyzer.....	± 2%[2].....	Same.....	Monthly.

[1]All accuracy requirements pertain to the final recorded value which is inclusive of the data acquisition system.

[2] If reading is under 100 ppm then the accuracy shall be ± 2 ppm.

Appendix B to Part III -- Figures

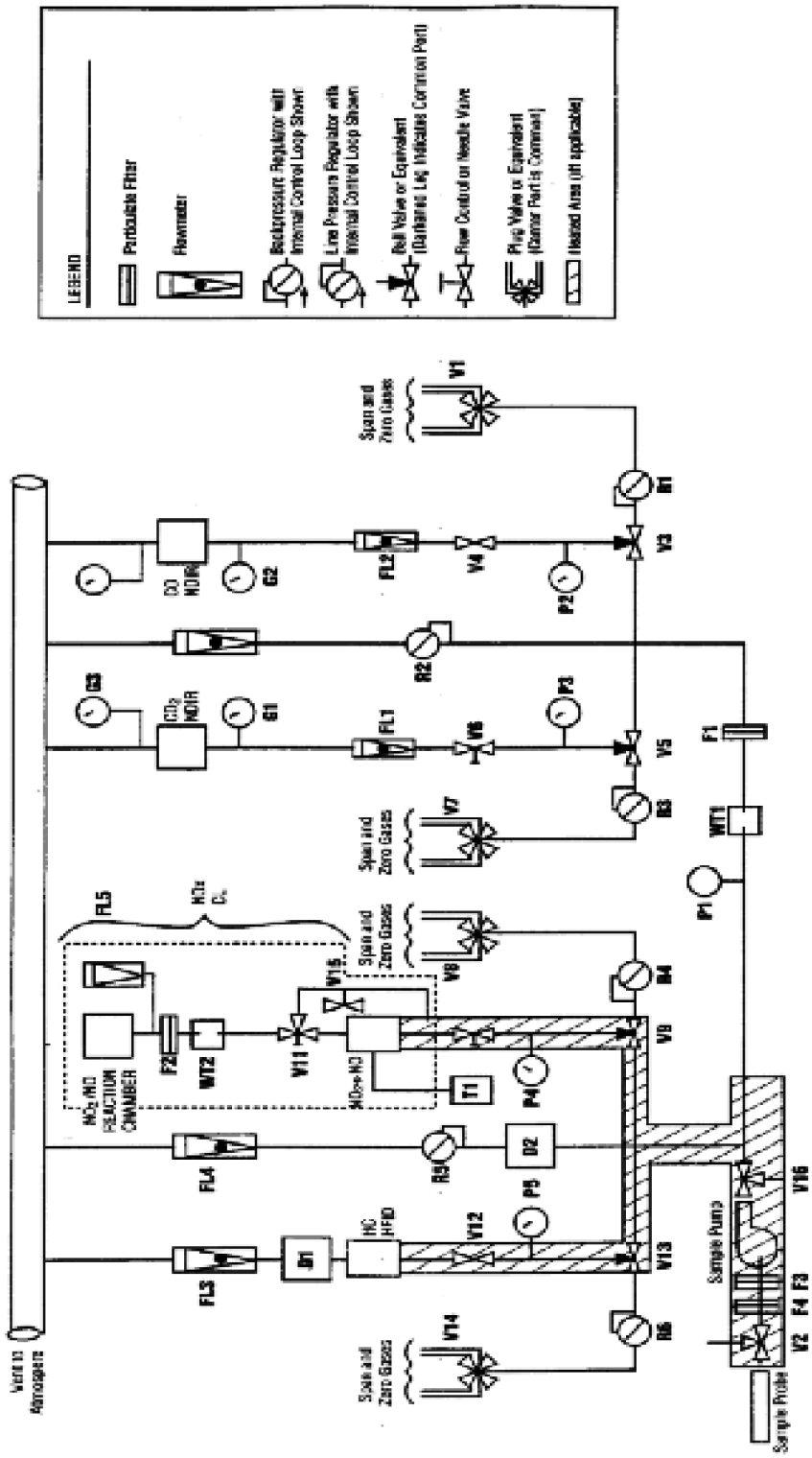

Figure 1. — Exhaust Gas Sampling and Analytical Train, Continuous Sampling

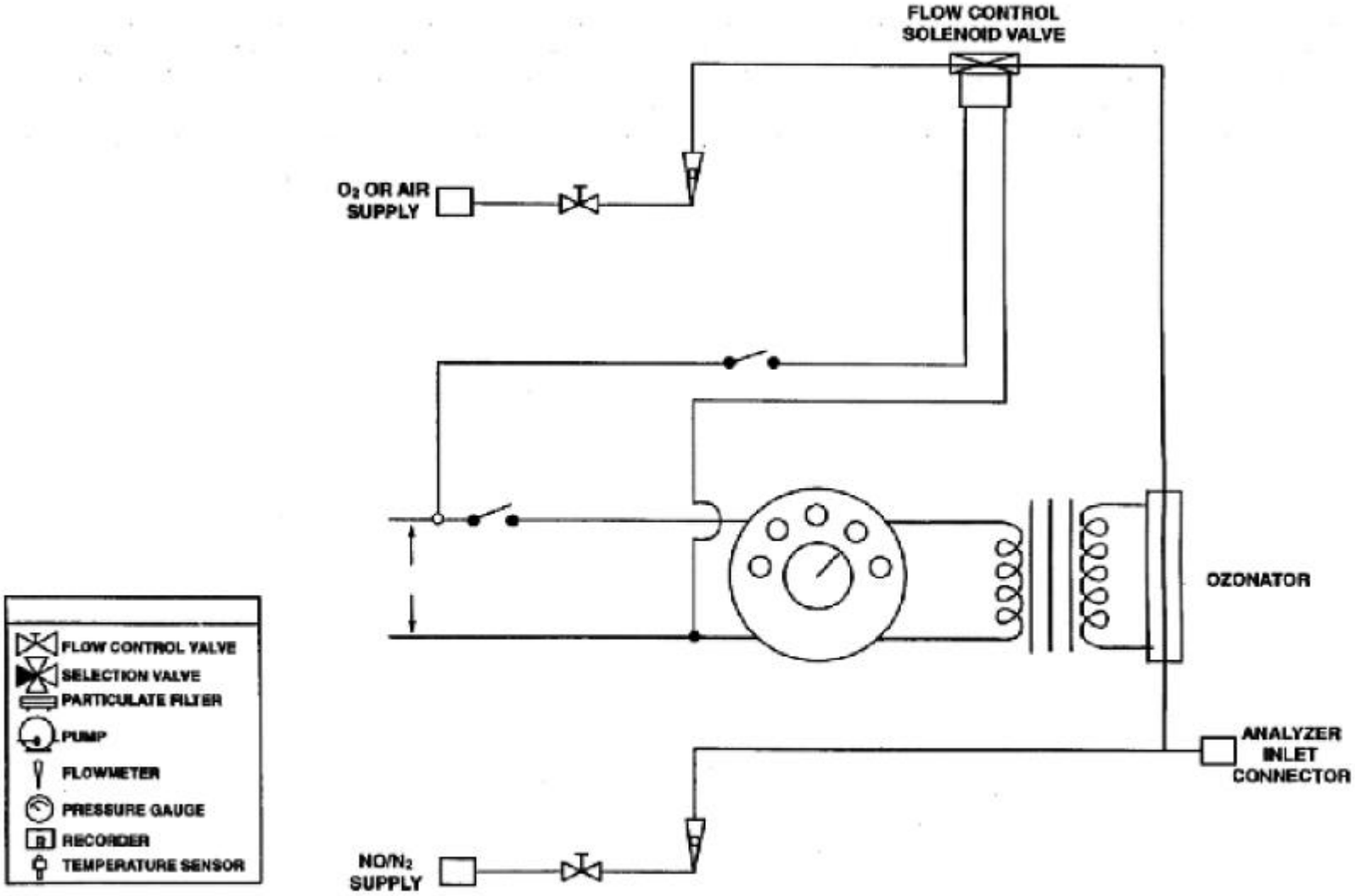

Figure 2. — NOx Converter Efficiency Detector

Part IV. Gaseous Exhaust Test Procedures

1. Scope; Applicability.

(a) This Part describes the procedures to follow in order to perform exhaust emission tests on new spark-ignition marine engines subject to the provisions of Part I. Provisions specific to raw gas sampling are in Part IV, sections 14 through 19, provisions specific to constant volume sampling are in Part IV, sections 20 through 26. All other sections in this Part apply to both raw gas sampling and constant volume sampling unless indicated otherwise.

(b) Requirements for emission test equipment and calibrating this equipment as required to perform the procedures in this Part are found in Part III.

2. Definitions.

The definitions in Part I, section 2 apply to this Part.

3. Abbreviations.

The abbreviations in Part I, section 3 apply to this Part.

4. Test Procedure Overview.

(a) The test consists of prescribed sequences of engine operating conditions to be conducted on an engine dynamometer or equivalent load and speed measurement device. The exhaust gases generated during engine operation are sampled either raw or dilute, and specific components are analyzed through the analytical system.

(b) The tests are designed to determine the brake-specific emissions of hydrocarbons, carbon monoxide, and oxides of nitrogen. The test consists of one idle mode and four power modes with an exponential relationship between torque and speed which span the typical operating range of spark-ignition marine engines. These procedures require the determination of the concentration of each pollutant, fuel flow, and the power output during each mode. The measured values are weighted and used to calculate the grams of each pollutant emitted per brake kilowatt hour (g/kW-hr).

(c) (1) When an engine is tested for exhaust emissions the complete engine is tested, with all emission control devices installed and functioning.

(2) Additional accessories (for example, oil cooler, alternators, and so forth) may be installed, but such accessory loading will be considered parasitic in nature and observed power is used in the emission calculation.

(d) All emission control systems installed on or incorporated in the application must be functioning during all procedures in this Part. In cases of component malfunction or failure, no maintenance is allowed without prior approval from the Executive Officer in accordance with Part I, section 23.

5. Recorded Information.

(a) Record the information described in this section for each test where applicable.

(b) Test data; general.
  (1) Engine identification number.
  (2) Engine emissions control system.
  (3) Test operator(s).
  (4) Number of hours of operation accumulated on the engine before beginning the warm-up portion of the test (to the nearest tenth hour).
  (5) Fuel identification.
  (6) For two-stroke engines, fuel/oil mixture ratio.
  (7) Date of most recent analytical assembly calibration.
  (8) All pertinent instrument information such as tuning, gain, serial numbers, detector number, and calibration curve numbers. As long as this information is traceable, it may be summarized by system number or analyzer identification numbers.

(c) Test data; pre-test.
  (1) Date and time of day.
  (2) Test number.
  (3) Barometric pressure; as an option, barometric pressure can be measured as a modal measurement instead of or in addition to a pre- and post-test measurement.
  (4) Recorder chart or equivalent. Identify for each test segment zero traces for each range used, and span traces for each range used.

(d) Test data; modal.
  (1) Recorder chart or equivalent. Identify for each test mode the emission concentration traces and the associated analyzer range(s).
  (2) Observed engine torque.
  (3) Observed engine rpm.
  (4) Engine intake air flow, if applicable.
  (5) Test cell temperature and humidity for each mode.
  (6) For raw gas testing; fuel flow for each mode. Fuel flow measurement is not required for dilute testing but is allowed. If the fuel flow measurement is a volume measurement system, record the fuel temperature in the measurement system for fuel density corrections to the mass flow rate. If the fuel temperature is within 3 deg.C of the calibration temperature, no density correction is required.
  (7) Engine intake temperature and humidity for each mode, if applicable.
  (8) Exhaust sample line temperature, if applicable.

(e) Test data; post-test.
  (1) Recorder chart or equivalent. Identify the hang-up check.
  (2) Recorder chart or equivalent. Identify the zero traces for each range used and the span traces for each range used.
  (3) Total number of hours of operation accumulated on the engine (to the nearest tenth hour).

(4) Barometric pressure, post-test segment.

6. Engine Parameters to be Measured and Recorded.

Measure or calculate, then record, the engine parameters in the table below:

Parameter	Units
Airflow rate (dry), if applicable.....	g/h
Fuel flow rate.....	g/h
Engine speed.....	rpm
Engine torque output.....	N-m
Power output.....	kW
Air inlet temperature.....	°C
Air humidity.....	mg/kg
Coolant temperature (liquid cooled).....	°C
Exhaust mixing chamber surface temperature, if applicable.	°C
Total accumulated hours of engine operation.....	h
Barometric pressure.....	kPa

7. Engine Inlet and Exhaust Systems.

(a) The engine manufacturer is liable for emission compliance over the full range of restrictions that are specified by the engine manufacturer for that particular engine.

(b) The air inlet filter system and exhaust muffler system combination used on the test engine must be the systems expected to yield the highest emission levels.

8. Pre-test Procedures.

(a) Engine service accumulation and stabilization procedure. Use the service accumulation procedure determined by the manufacturer for exhaust emission stabilizing of an engine, consistent with good engineering practice (see Part 1, section 21).

(1) The manufacturer determines, for each engine family, the number of hours at which the engine exhaust emission control system combination is stabilized for emission testing. However, this stabilization procedure may not exceed 12 hours. The manufacturer must maintain, and provide to the Executive Officer upon request, a record of the rationale used in making this determination. If the manufacturer can document that, at some time before the full 12 hour service accumulation period, the engine emissions are decreasing for the remainder of the 12 hours, the service accumulation may be completed at that time. The manufacturer may elect to accumulate 12 hours on each test engine within an engine family without making this determination.

(2) During service accumulation, the fuel and lubricants specified in Part III, section 8 must be used.

(3) Engine maintenance during service accumulation is allowed only in accordance with Part I, section 22.

(b) Engine pre-test preparation.

(1) Drain and charge the fuel tank(s) with the specified test fuel (see Part III, section 8) to 50 percent of the tank's nominal capacity. If an external fuel tank is used, the engine fuel inlet system pressure must be typical of what the engine will see in use.

(2) Operate the engine on the dynamometer measuring the fuel consumption (fuel consumption required only for raw gas sampling method) and torque before and after the emission sampling equipment is installed, including the sample probe, using mode 1 from Table 1-1 in Part 1, section 20. The emission sampling equipment may not significantly affect the operational characteristics of the engine (typically, the results should agree within five percent).

(c) Analyzer pre-test procedures.

(1) If necessary, warm up and stabilize the analyzer(s) before calibrations are performed.

(2) Replace or clean the filter elements and then vacuum leak check the system per Part III, section 24(a). If necessary, allow the heated sample line, filters, and pumps to reach operating temperature.

(3) Perform the following system checks:

(A) If necessary, check the sample-line temperature. Heated FID sample line temperature must be maintained between 110 deg.C and 230 deg.C, a heated NO_X sample line temperature must be maintained between 60 deg.C and 230 deg.C.

(B) Check that the system response time has been accounted for before sample collection data recording.

(C) A hang-up check is permitted.

(4) Check analyzer zero and span before and after each test at a minimum. Further, check analyzer zero and span any time a range change is made or at the maximum demonstrated time span for stability for each analyzer used.

(d) Check system flow rates and pressures and reset if necessary.

9. Engine Dynamometer Test Run.

(a) Engine and dynamometer start-up.

(1) Only adjustments in accordance with Part I, section 17, may be made to the test engine before starting a test.

(2) If necessary, warm up the dynamometer as recommended by the dynamometer manufacturer or in accordance good engineering practice.

(3) At the manufacturer's option, the engine can be run with the throttle in a fixed position or by using the engine's governor (if the engine is manufactured with a

governor). In either case, the engine speed and load must meet the requirements specified in paragraph (b)(12) of this section.

(b) Each test consists of the following:

(1) Record the general test data as specified in section 5 of this Part.

(2) Precondition the engine in the following manner;

(A) Operate the engine at idle for 2 to 3 minutes;

(B) Operate the engine at a power greater than or equal to 50 percent power at the rated speed for 5 to 7 minutes;

(C) Operate the engine at rated speed and maximum power for 25 to 30 minutes;

(D) Option. For four-stroke engines, where appropriate, it is permitted to precondition the engine at rated speed and maximum power until the oil and water temperatures are stabilized. The temperatures are defined as stabilized if they are maintained within 2 percent of point for 2 minutes. The engine must be operated a minimum of 10 minutes for this option. This optional procedure may be substituted for step in paragraphs (b)(2)(iii) of this section;

(E) Option. If the engine has been operating on service accumulation for a minimum of 40 minutes, the service accumulation may be substituted for steps in paragraphs (b)(2) (i) through (iii) of this section.

(3) Record all pre-test data specified in Part IV, section 5(c).

(4) Start the test cycle (see Part IV, section 10) within 10 minutes of the completion of the steps required by paragraph (b)(2) of this section.

(5) During the first mode calculate the torque corresponding to 71.6, 46.5, and 25.3 percent of the maximum observed torque for the rated speed.

(6) Once engine speed and load are set for a mode, run the engine for a sufficient period of time to achieve thermal stability. At the manufacturers option, determine and document the appropriate criterion for thermal stability for each engine family.

(7) Record all modal data specified in Part IV, section 5(e) for a minimum time period of the last two minutes of each mode. Longer averaging periods are acceptable, but the data averaged must be from a continuous time period. The duration of time during which this data is recorded is referred to as the “sampling period.” The data collected during the sampling period is used for modal emission calculations.

(8) Continuously record the analyzer's response to the exhaust gas during the sampling period.

(9) Modes may be repeated.

(10) If a delay of more than one hour occurs between the end of one mode and the beginning of another mode, the test is void and must be restarted as described at paragraph (b)(1) of this section.

(11) The engine speed and load must be maintained within the requirements of Part IV, section 10 during the sampling period for each mode. If this requirement is not met, the mode is void and must be restarted.

(12) If at any time during a mode, the test equipment malfunctions or the specifications in Part IV, section 10 can not be met, the test is void, and must be aborted. Corrective action should be taken and the test restarted.

(13) Fuel flow and air flow during the idle condition may be determined just before or immediately following the dynamometer sequence, if longer times are required for accurate measurements. If the dilute sampling method (Constant Volume Sampling) is used, neither fuel flow nor air flow measurements are required.

(c) Exhaust gas measurements.

(1) Measure HC, CO, CO_2, and NO_X concentration in the exhaust sample.

(2) Each analyzer range that may be used during a test segment must have the zero and span responses recorded before the start of the test. Only the range(s) used to measure the emissions during the test is required to have its zero and span recorded after the completion of the test. Depending on the stability of each individual analyzer, more frequent zero checks or spans between modes may be necessary.

(3) It is permitted to change filter elements between test segments.

(4) A leak check is permitted between modes.

(5) A hang-up check is permitted between modes (see Part IV, section 13).

(6) If, during the emission measurement portion of a mode, the value of the gauges downstream of the NDIR analyzer(s) G3 or G4 (See Figure 1 in Appendix B of Part III) differs by more than $\pm$ 0.5 kPa, the mode is void.

10. Engine Test Cycle.

(a) The 5-mode cycle specified in Part I, section 20 shall be followed in dynamometer operation tests of spark-ignition marine engines.

(b) During each non-idle mode the specified speed and load shall be held to within $\pm$ 50 rpm or $\pm$ two percent of point, whichever is greater. During each idle mode the engine speed shall be held within $\pm$75 rpm or $\pm$ five percent of the manufacturers specified idle speed, whichever is greater. For direct drive products (no neutral gear), it is acceptable to have an accessory load on the engine during the idle mode provided that the engine speed is within $\pm$ five percent of the manufacturers specified idle speed and the accessory load is representative of in use operation.

(c) If the operating conditions specified in paragraph (b) of this section for modes 2, 3, 4, and 5 cannot be maintained, the Executive Officer may authorize deviations from the specified load conditions. Such deviations shall not exceed 10 percent of the maximum torque at the test speed. The minimum deviations, above and below the specified load, necessary for stable operation shall be determined by the manufacturer and approved by the Executive Officer before the test run.

(d) Do not include power generated during the idle mode (mode 5) in the calculation of emissions results.

11. Post-test Analyzer Procedures.

(a) Perform a hang-up check within 60 seconds of the completion of the last mode in the test. Use the following procedure:
   (1) Introduce a zero-grade gas or room air into the sample probe or valve V2 (see Figure 1 in Appendix B of Part III) to check the "hangup zero" response. Simultaneously start a time measurement.
   (2) Select the lowest HC range used during the test.
   (3) Within four minutes of beginning the time measurement in paragraph (a)(1) of this section, the difference between the zero gas response and the hang-up zero response shall not be greater than 5.0 percent of full scale or 10 ppmC whichever is greater.

(b) Begin the analyzer span checks within six minutes after the completion of the last mode in the test. Record for each analyzer the zero and span response for each range used during the preceding test or test segment.

(c) If during the test, the filter element(s) were replaced or cleaned, a vacuum check must be performed per Part III, section 24(a) immediately after the span checks. If the vacuum side leak check does not meet the requirements of Part III, section 24(a) the test is void.

(d) Read and record the post-test data specified in Part IV, section 5(e).

(e) For a valid test, the analyzer drift between the before-segment and after-segment span checks for each analyzer must meet the following requirements:
   (1) The span drift (defined as the change in the difference between the zero response and the span response) must not exceed two percent of full-scale chart deflection for each range used.
   (2) The zero response drift must not exceed two percent of fullscale chart deflection for each range used above 155 ppm (or ppm C), or three percent of full-scale chart deflection for each range below 155 ppm (or ppm C).

12. Data Logging.

(a) A computer or any other automatic data collection (ADC) device(s) may be used as long as the system meets the requirements of this Part.

(b) Determine from the data collection records the analyzer responses corresponding to the end of each mode.

(c) Record data at a minimum of one Hz (one time per second).

(d) Determine the final value for power by averaging the individually calculated power points for each value of speed and torque recorded during the sampling period. As an alternative, the final value for power can be calculated from the average values for speed and torque, collected during the sampling period.

(e) Determine the final value for CO_2, CO, HC, and NO_X concentrations by averaging the concentration of each point taken during the sample period for each mode.

13. Exhaust Sample Procedure--Gaseous Components.

(a) Automatic data collection equipment requirements. The analyzer response may be read by automatic data collection (ADC) equipment such as computers, data loggers, etc. If ADC equipment is used the following is required:
   (1) For dilute grab ("bag") analysis, the analyzer response must be stable at greater than 99 percent of the final reading for the dilute exhaust sample bag. A single value representing the average chart deflection over a 10-second stabilized period shall be stored.
   (2) For continuous analysis systems, a single value representing the average integrated concentration over a cycle shall be stored. Alternatively, the ADC may store the individual instantaneous values collected during the measurement period.
   (3) The chart deflections or average integrated concentrations required in paragraphs (a)(1) and (a)(2) of this section may be stored on long-term computer storage devices such as computer tapes, storage discs, punch cards, and so forth, or they may be printed in a listing for storage. In either case a chart recorder is not required and records from a chart recorder, if they exist, need not be stored.
   (4) If ADC equipment is used to interpret analyzer values, the ADC equipment is subject to the calibration specifications of the analyzer as if the ADC equipment is part of analyzer system.

(b) Data records from any one or a combination of analyzers may be stored as chart recorder records.

(c) Grab sample analysis. For dilute grab sample analysis perform the following sequence:
   (1) Calibrate analyzers using the procedure described in Part III, section 26.
   (2) Record the most recent zero and span response as the preanalysis value.
   (3) Measure HC, CO, CO_2, and NO_X background concentrations in the sample bag(s) and background sample bag(s) using the same flow rates and pressures.
   (4) Good engineering practice dictates that analyzers used for continuous analysis should be operated such that the measured concentration falls between 15 percent and 100 percent of full scale.
   (5) A post-analysis zero and span check of each range must be performed and the values recorded. The number of events that may occur between the pre and post checks is not specified. However, the difference between pre-analysis zero and span values (recorded in paragraph (c)(5) or (c)(6) of this section) versus those recorded for the post-analysis check may not exceed the zero drift limit or the span drift limit of 2 percent of full scale chart deflection for any range used. Otherwise the test is void.

(d) Continuous sample analysis. For continuous sample analysis, perform the following sequence:
   (1) Calibrate analyzers using the procedures described in Part III, section 26.
   (2) Leak check portions of the sampling system that operate at negative gauge pressures when sampling, and allow heated sample lines, filters, pumps, and so forth to stabilize at operating temperature.

(3) Option: Determine the hang-up for the FID or HFID sampling system:
   (A) Zero the analyzer using zero air introduced at the analyzer port.
   (B) Flow zero air through the overflow sampling system. Check the analyzer response.
   (C) If the overflow zero response exceeds the analyzer zero response by two percent or more of the FID or HFID full-scale deflection, hang-up is indicated and corrective action must be taken (see paragraph (e) of this section).
   (D) The complete system hang-up check specified in paragraph (f) of this section is recommended as a periodic check.
(4) Obtain a stable zero reading.
(5) Good engineering practice dictates that analyzers used for continuous analysis should be operated such that the measured concentration falls between 15 percent and 100 percent of full scale.
(6) Record the most recent zero and span response as the preanalysis values.
(7) Collect background HC, CO, CO_2, and NO_X in a sample bag (for dilute exhaust sampling only, see Part IV, section 22).
(8) Perform a post-analysis zero and span check for each range used at the conditions specified in paragraph (d)(1) of this section. Record these responses as the post-analysis values.
(9) Neither the zero drift nor the span drift between the preanalysis and post-analysis checks on any range used may exceed three percent for HC, or two percent for NO_X, CO, and CO_2, of full scale chart deflection, or the test is void. (If the HC drift is greater than three percent of full-scale chart deflection, hydrocarbon hang-up is likely.)
(10) Determine background levels of NO_X, CO, or CO_2 (for dilute exhaust sampling only) by the grab ("bag") technique outlined in paragraph (c) of this section.

(e) Hydrocarbon hang-up. If HC hang-up is indicated, the following sequence may be performed:
   (1) Fill a clean sample bag with background air.
   (2) Zero and span the HFID at the analyzer ports.
   (3) Analyze the background air sample bag through the analyzer ports.
   (4) Analyze the background air through the entire sample probe system.
   (5) If the difference between the readings obtained is two ppm or more, clean the sample probe and the sample line.
   (6) Reassemble the sample system, heat to specified temperature, and repeat the procedure in paragraphs (e)(1) through (e)(5) of this section.

14. Raw Gaseous Exhaust Sampling and Analytical System Description.

(a) Schematic drawing. An example of a sampling and analytical system which may be used for testing under this Part is shown in Figure 4 in Appendix A of this Part. All components or parts of components that are wetted by the sample or corrosive calibration gases shall be either chemically cleaned stainless steel or inert material (e.g., polytetrafluoroethylene resin). The use of "gauge savers" or "protectors" with nonreactive diaphragms to reduce dead volumes is permitted.

(b) Sample probe.

(1) The sample probe shall be a straight, closed end, stainless steel, multi-hole probe. The inside diameter shall not be greater than the inside diameter of the sample line + 0.03 cm. The wall thickness of the probe shall not be greater than 0.10 cm. The fitting that attaches the probe to the exhaust pipe shall be as small as practical in order to minimize heat loss from the probe.

(2) The probe shall have a minimum of three holes. The spacing of the radial planes for each hole in the probe must be such that they cover approximately equal cross-sectional areas of the exhaust duct. The angular spacing of the holes must be approximately equal. The angular spacing of any two holes in one plane may not be 180 deg. $\pm$ 20 deg. (i.e., section C-C of Figure 1 in Appendix A of this Part). The holes should be sized such that each has approximately the same flow. If only three holes are used, they may not all be in the same radial plane.

(3) The exhaust gas probe must be located in a position which yields a well mixed, homogeneous sample of the engine exhaust. The probe must extend radially through the exhaust duct before where the exhaust mixes with the cooling water. The cooling water flow may be rerouted if necessary to obtain an emission sample provided that the modification has no significant effect on the performance or emissions characteristics of the engine. The probe must pass through the approximate center and must extend across at least 80 percent of the diameter of the duct. The exact position of the probe may vary from engine family to engine family.

(c) Sample transfer line.

(1) The maximum inside diameter of the sample line shall not exceed 1.32 cm.

(2) If valve V2 in Figure 1 of Appendix B of Part III is used, the sample probe must connect directly to valve V2 in Figure 1 of Appendix B of Part III. The location of optional valve V2 may not be greater than 1.22 m from the exhaust duct.

(3) The location of optional valve V16 in Figure 1 of Appendix B of Part III may not be greater than 61 cm from the sample pump. The leakage rate for this section on the pressure side of the sample pump may not exceed the leakage rate specification for the vacuum side of the pump.

(d) Venting. All vents including analyzer vents, bypass flow, and pressure relief vents of regulators should be vented in such a manner to avoid endangering personnel in the immediate area.

(e) Any variation from the specifications in this Part including performance specifications and emission detection methods may be used only with prior approval by the Executive Officer.

(f) Additional components, such as instruments, valves, solenoids, pumps, switches, and so forth, may be employed to provide additional information and coordinate the functions of the component systems.

(g) The following requirements must be incorporated in each system used for raw testing under this Part.

(1) Take the sample for all components with one sample probe and split it internally to the different analyzers.

(2) Heat the sample transport system from the engine exhaust pipe to the HC analyzer for the raw gas sampling method as indicated in Figure 1 in Appendix B of Part III. The NO_X analyzer for the raw gas sampling method may be heated as indicated in Figure 1 in Appendix B of Part III. The HC analyzer and the NO_X analyzer for the dilute sampling method may be heated as indicated in Figure 1 in Appendix B of Part III.

15. Raw Gaseous Sampling Procedures.

Fit all heated sampling lines with a heated filter to extract solid particles from the flow of gas required for analysis. The sample line for HC measurement must be heated. The sample line for CO, CO_2, and NO_X may be heated or unheated.

16. Intake Air Flow Measurement Specifications.

(a) If used, the engine intake air flow measurement method used must have a range large enough to accurately measure the air flow over the engine operating range during the test. Overall measurement accuracy must be $\pm$ two percent of full-scale value of the measurement device for all modes except the idle mode. For the idle mode, the measurement accuracy shall be $\pm$ five percent or less of the full-scale value. The Executive Officer must be advised of the method used before testing.

(b) When an engine system incorporates devices that affect the air flow measurement (such as air bleeds, air injection, pulsed air, and so forth) that result in understated exhaust emission results, make corrections to the exhaust emission results to account for such effects.

17.Fuel Flow Measurement Specifications.

(a) Fuel flow measurement is required only for raw testing but is allowed for dilute testing.

(b) The fuel flow rate measurement instrument must have a minimum accuracy of $\pm$ two percent of full-scale flow rate for each measurement range used.

18. Data Evaluation for Gaseous Emissions.

For the evaluation of the gaseous emissions recording, record the last two minutes of each mode and determine the average values for HC, CO, CO_2, and NO_X during each mode from the average concentration readings determined from the corresponding calibration data.

19. Raw Emission Sampling Calculations.

(a) Derive the final test results through the steps described in this section.

(b) Air and fuel flow method. If both air and fuel flow mass rates are measured, the following equations are used to determine the weighted emission values for the test engine:

$$W_{NOx} = (G_{AIRD} + G_{FUEL}) \ x \ \frac{M_{NO_2}}{M_{EXH}} \ x \ WNO_x \ x \ K_H \ x \ \frac{1}{10^6}$$

$$W_{HC} = (G_{AIRD} + G_{FUEL}) \ x \ \frac{M_{HC_{exh}}}{M_{exh}} \ x \ WHX \ x \ \frac{1}{10^6}$$

$$W_{CO} = (G_{AIRD} + G_{FUEL}) \ x \ \frac{M_{CO}}{M_{exh}} \ x \ WCO \ x \ \frac{1}{10^6}$$

Where:
W_{HC} = Mass rate of HC in exhaust [g/hr],
G_{AIRD} = Intake air mass flow rate on dry basis [g/hr],
G_{FUEL} = Fuel mass flow rate [g/hr],
M_{HCexh} = Molecular weight of hydrocarbons in the exhaust; see the following equation:

$$M_{HC_{exh}} + 12.01 + 1.008 \ x \ \alpha$$

Where:
α=Hydrocarbon/carbon atomic ratio of the fuel.
M_{exh}=Molecular weight of the total exhaust; see the following equation:

$$M_{exh} = \frac{M_{HC_{exh}} \; x \; WHC}{10^6} + \frac{28.01 \; x \; WCO}{10^2} + \frac{44.1 \; x \; WCO_2}{10^2} +$$

$$\frac{46.01 + WNO_X}{10^6} + \frac{2.016 \; x \; WH_2}{10^2} + 18.01 \; x \; (1 - K) +$$

$$28.01 \; x \; \frac{[100 - \frac{WHC}{10^4} - WCO - WCO_2 \; \frac{WNO_X}{10^4} - WH_2 - 100 \; x \; (1 - K)]}{10^2}$$

Where:
WHC = HC volume concentration in exhaust, ppmC wet
WCO = CO percent concentration in the exhaust, wet
DCO = CO percent concentration in the exhaust, dry
WCO_2 = CO_2 percent concentration in the exhaust, wet
DCO_2 = CO_2 percent concentration in the exhaust, dry
WNO_X = NO volume concentration in exhaust, ppm wet
WH_2 = H_2 percent concentration in exhaust, wet
K = correction factor to be used when converting dry measurements to a wet basis. Therefore, wet concentration = dry concentration x K, where K is:

$$\frac{1}{1 + 0.005 \; x \; (DCO + DCO_2) \; x \; \alpha - 0.01 \; x \; DH_2}$$

DH_2 = H2 percent concentration in exhaust, dry, calculated from the following equation:

$$DH_2 = \frac{0.5 \; x \; \alpha \; x \; DCO \; x \; (DCO + DCO_2)}{DCO + (3 \; x \; DCO_2)}$$

W_{CO} = Mass rate of CO in exhaust, [g/hr]
M_{CO} = Molecular weight of CO = 28.01
W_{NOx} = Mass rate of NO_X in exhaust, [g/hr]
M_{NO2} = Molecular weight of NO_2 = 46.01

K_H = Factor for correcting the effects of humidity on NO_2 formation for four-stroke gasoline engines; see the equation below:

$$K_H = \frac{1}{1 - 0.0329 \ x \ (H - 10.71)}$$

Where:
H = specific humidity of the intake air in grams of moisture per kilogram of dry air. For two-stroke gasoline engines, KH should be set to 1.

(c) Fuel flow method. The following equations are to be used when fuel flow is selected as the basis for mass emission calculations using the raw gas method.

$$W_{NO_X} = \frac{M_{NO_X}}{M_F} \ x \ \frac{G_{FUEL}}{TC} \ x \ \frac{WNO_X}{10^4} \ x \ K_H$$

$$W_{HC} = \frac{G_{FUEL}}{TC} \ x \ \frac{WHC}{10^4}$$

$$W_{CO} = \frac{M_{CO}}{M_F} \ x \ \frac{G_{FUEL}}{TC} \ x \ WCO$$

Where:
W_{HC} = Mass rate of HC in exhaust, [g/hr]
M_F = Molecular weight of test fuel; see following equation:

$$M_F = 12.01 + 1.008 \ x \ \alpha$$

G_{FUEL} = Fuel mass flowrate, [g/hr]
TC = Total carbon; see following equation:

$$TC = WCO + WCO_2 + \frac{WHC}{10^4}$$

WHC = HC volume concentration in exhaust, ppmC wet
WCO = CO percent concentration in the exhaust, wet
DCO = CO percent concentration in the exhaust, dry
WCO_2 = CO_2 percent concentration in the exhaust, wet
DCO_2 = CO_2 percent concentration in the exhaust, dry

WNOx = NO volume concentration in exhaust, ppm wet
WH2 = H_2 percent concentration in exhaust, wet
K = correction factor to be used when converting dry measurements to a wet basis. Therefore, wet concentration = dry concentration x K, where K is:

$$K = \frac{1}{1 + 0.005 \ x \ (DCO + DCO_2) \ x \ \alpha - 0.01 \ x \ DH_2}$$

DH_2 = H2 percent concentration in exhaust, dry, calculated from the following equation:

$$DH_2 = \frac{0.5 \ x \ \alpha \ x \ DCO \ x \ (DCO + DCO_2)}{DCO + (3 \ x \ DCO_2)}$$

W_{CO} = Mass rate of CO in exhaust, [g/hr]
M_{CO} = Molecular weight of CO = 28.01
W_{NOx} = Mass rate of NO_X in exhaust, [g/hr]
M_{NO2} = Molecular weight of NO_2 = 46.01
K_H = Factor for correcting the effects of humidity on NO_2 formation for four-stroke gasoline engines; see the equation below:

$$K_H = \frac{1}{1 - 0.0329 \ x \ (H - 10.71)}$$

Where:
H = specific humidity of the intake air in grams of moisture per kilogram of dry air. For two-stroke gasoline engines, KH should be set to 1.

(d) The final reported emission test results must be computed by using the following formula for each individual gas component:

$$Y_{wm} = \frac{\sum (W_i \ x \ f_i)}{\sum (P_i \ x \ f_i)}$$

Where:
Y_{wm} = Weighted mass emission level (HC, CO, NOx) for a test [g/kW-hr].
Wi = Average mass flow rate (W_{HC}, W_{CO}, W_{NOx}) of an emission from the test engine during mode i, [g/hr].

f_i = Weighting factors for each mode according to Part IV, section 10(a)
P_i = Average power measured during mode i, [kW], calculated according to the formula given in Part IV, section 23(b). Power for the idle mode shall always be zero for this calculation.

(e) The final reported weighted brake-specific fuel consumption (WBSFC) shall be computed by use of the following formula:

$$WBSFC = \frac{\sum (F_i \ x \ f_i)}{\sum (P_i \ x \ f_i)}$$

Where:
WBSFC = Weighted brake-specific fuel consumption in grams of fuel per kilowatt-hour (g/kW-hr).
F_i = Fuel mass flow rate of the engine during mode i, [g/hr].
f_i = Weighting factors for each mode according to Part IV, section 10(a)
P_i = Average power measured during mode i, [kW], calculated according to the formula given in Part IV, section 23(b). Power for the idle mode shall always be zero for this calculation.

20. CVS Concept of Exhaust Gas Sampling System.

(a) A dilute exhaust sampling system is designed to directly measure the true mass of emissions in engine exhaust without the necessity of measuring either fuel flow or intake air flow. This is accomplished by diluting the exhaust produced by an engine under test with ambient background air and measuring the total diluted exhaust flow rate and the concentration of emissions within the dilute flow. Total mass flow of an emission is then easily calculated.

(b) A constant volume sampler (CVS) is typically used to control the total amount of dilute flow through the system. As the name implies, a CVS restricts flow to a known value dependent only on the dilute exhaust temperature and pressure.

(c) For the testing described in this Part, a CVS must consist of: A mixing tunnel into which the engine exhaust and dilutant (background) air are dumped; a dilute exhaust flow metering system; a dilute exhaust sample port; a background sample port; a dilute exhaust sampling system; and a background sampling system.

(1) Mixing tunnel. The mixing tunnel must be constructed such that complete mixing of the engine exhaust and background air is assured before the sampling probe.

(2) Exhaust flow metering system. A dilute exhaust flow metering system must be used to control the total flow rate of the dilute engine exhaust as described in Part IV, section 21.

(3) Exhaust sample port. A dilute exhaust sample port must be located in or downstream of the mixing tunnel at a point where complete mixing of the engine exhaust and background air is assured.

(4) Background sample port. A dilute background sample port must be located in the stream of background air before it is mixed with the engine exhaust. The background probe must draw a representative sample of the background air during each sampling mode.

(5) Exhaust sampling system. The dilute exhaust sampling system controls the flow of samples from the mixing tunnel to the analyzer system. This could be either a continuous sampling system or grab (bag) sampling system. If a critical flow venturi (CFV) is used on the dilute exhaust sample probe, this system must assure that the sample CFV is in choke flow during testing. If no CFV is used, this system must assure a constant volumetric flow rate through the dilute exhaust sample probe or must incorporate electronic flow compensation.

(6) Background sampling system. The background sampling system controls the flow of samples from the background air supply to the analyzer system. This could be either a continuous sampling system or grab (bag) sampling system. This system must assure a constant volumetric flow rate through the background sample probe.

21. Dilute Gaseous Exhaust Sampling and Analytical System Description.

(a) General. The exhaust gas sampling system described in this section is designed to measure the true mass emissions of engine exhaust. This system utilizes the Constant volume Sampling (CVS) concept (described in Part IV, section 20) of measuring mass emissions of HC, NOx, CO, and CO_2. Grab sampling for individual modes is an acceptable method of dilute testing for all constituents, HC, NOx, CO, and CO_2. Continuous dilute sampling is not required for any of the exhaust constituents, but is allowable for all. Heated sampling is not required for any of the constituents, but is allowable for HC and NOx. The mass of gaseous emissions is determined from the sample concentration and total flow over the test period. As an option, the measurement of total fuel mass consumed over a cycle may be substituted for the exhaust measurement of CO_2. General requirements are as follows:

(1) This sampling system requires the use of a Positive Displacement Pump--Constant Volume Sampler (PDP-CVS) system with a heat exchanger, or a Critical Flow Venturi--Constant Volume Sampler (CFV-CVS) system with CVS sample probes and/or a heat exchanger or electronic flow compensation. Figure 2 in Appendix A of this Part is a schematic drawing of the PDP-CVS system. Figure 3 in Appendix A of this Part is a schematic drawing of the CFV-CVS system.

(2) The HC analytical system requires:

(i) Grab sampling (see Part IV, section 20, and Figure 2 or Figure 3 in Appendix A of this Part) and analytical capabilities (see Part IV, section 23, and Figure 4 in Appendix A of this Part), or

(ii) Continuously integrated measurement of diluted HC meeting the minimum requirements and technical specifications contained in paragraph (b)(2) of this section.

(iii) The dilute HC analytical system for spark-ignition marine engines does not require a heated flame ionization detector (HFID).

(iv) If used, the HFID sample must be taken directly from the diluted exhaust stream through a heated probe and integrated continuously over the test cycle.

(v) The heated probe must be located in the sampling system far enough downstream of the mixing area to ensure a uniform sample distribution across the CVS duct at the sampling zone.

(3) The CO and CO_2 analytical system requires:

(i) Grab sampling (see Part IV, section 20, and Figure 2 or Figure 3 in Appendix A of this Part) and analytical capabilities (see Part IV, section 23, and Figure 4 in Appendix A of this Part), or

(ii) Continuously integrated measurement of diluted CO and CO_2 meeting the minimum requirements and technical specifications contained in paragraph (b)(4) of this section.

(4) The NOx analytical system requires:

(i) Grab sampling (see Part IV, section 20, and Figure 2 or Figure 3 in Appendix A of this Part) and analytical capabilities (see Part IV, section 23, and Figure 4 in Appendix A of this Part), or

(ii) A continuously integrated measurement of diluted NOx meeting the minimum requirements and technical specifications contained in paragraph (b)(4) of this section.

(5) Since various configurations can produce equivalent results, exact conformance with these drawings is not required. Additional components such as instruments, valves, solenoids, pumps, and switches may be used to provide additional information and coordinate the functions of the component systems. Other components, such as snubbers, which are not needed to maintain accuracy on some systems, may be excluded if their exclusion is based upon good engineering judgment.

(6) Other sampling and/or analytical systems may be used if shown to yield equivalent results and if approved in advance by the Executive Officer.

(b) Component description. The components necessary for exhaust sampling must meet the following requirements:

(1) Exhaust dilution system. The PDP-CVS must conform to all of the requirements listed for the exhaust gas PDP-CVS in Part IV, section 20 of this chapter. The CFV-CVS must conform to all of the requirements listed for the exhaust gas

CFV-CVS in Part IV, section 20. In addition, the CVS must conform to the following requirements:

(i) The flow capacity of the CVS must be sufficient to maintain the diluted exhaust stream in the dilution system at a temperature of 190 deg.C or less at the sampling zone for hydrocarbon measurement and as required to prevent condensation at any point in the dilution system. Gaseous emission samples may be taken directly from this sampling point.

(ii) For the CFV-CVS, either a heat exchanger or electronic flow compensation is required (see Figure 3 in Appendix A of this Part).

(iii) For the CFV-CVS when a heat exchanger is used, the gas mixture temperature, measured at a point immediately ahead of the critical flow venturi, must be within ±11 deg.C of the average operating temperature observed during the test with the simultaneous requirement that condensation does not occur. The temperature measuring system (sensors and readout) must have an accuracy and precision of ±2 deg.C. For systems utilizing a flow compensator to maintain proportional flow, the requirement for maintaining constant temperature is not necessary.

(2) Continuous HC measurement system.

(i) The continuous HC sample system (as shown in Figure 2 or 3 in Appendix A of this Part) uses an “overflow” zero and span system. In this type of system, excess zero or span gas spills out of the probe when zero and span checks of the analyzer are made.

(ii) No other analyzers may draw a sample from the continuous HC sample probe, line, or system, unless a common sample pump is used for all analyzers and the sample line system design reflects good engineering practice.

(iii) The overflow gas flow rates into the sample line must be at least 105 percent of the sample system flow rate.

(iv) The overflow gases must enter the sample line as close as practical to the outside surface of the CVS duct or dilution system.

(v) The continuous HC sampling system consists of a probe (which for a HFID analyzer must raise the sample to the specified temperature) and, where used, a sample transfer system (which for a HFID must maintain the specified temperature). The HFID continuous hydrocarbon sampling system (exclusive of the probe) must:

(A) Maintain a wall temperature of 190 deg. C ± 11 deg. C as measured at every separately controlled heated component (that is, filters, heated line sections), using permanent thermocouples located at each of the separate components.

(B) Have a wall temperature of 190 deg. C ± 11 deg. C over its entire length. The temperature of the system is demonstrated by profiling the thermal characteristics of the system where possible at initial

installation and after any major maintenance performed on the system. The profiling is to be accomplished using the insertion thermocouple probing technique. The system temperature must be monitored continuously during testing at the locations and temperature described in Part IV, section 21(b)(2).

(c) Maintain a gas temperature of 190 deg. C $\pm$ 11 deg. C immediately before the heated filter and HFID. Determine these gas temperatures by a temperature sensor located immediately upstream of each component.

(vi) The continuous hydrocarbon sampling probe:

(A) Is defined as the first 25.4 to 76.2 cm of the continuous hydrocarbon sampling system.

(B) Has a 0.483 cm minimum inside diameter.

(C) Is installed in the dilution system at a point where the dilution air and exhaust are well mixed and provide a homogenous mixture.

(D) Is sufficiently distant (radially) from other probes and the system wall so as to be free from the influence of any wakes or eddies.

(E) For a continuous HFID sample probe, the probe must increase the gas stream temperature to 190 deg. C $\pm$ 11 deg. C at the exit of the probe. Demonstrate the ability of the probe to accomplish this using the insertion thermocouple technique at initial installation and after any major maintenance. Demonstrate compliance with the temperature specification by continuously recording during each test the temperature of either the gas stream or the wall of the sample probe at its terminus.

(vii) The response time of the continuous measurement system must be taken into account when logging test data.

(3) Sample mixing.

(i) Configure the dilution system to ensure a well mixed, homogeneous sample before the sampling probe(s).

(ii) Make the temperature of the diluted exhaust stream inside the dilution system sufficient to prevent water condensation.

(iii) Direct the engine exhaust downstream at the point where it is introduced into the dilution system.

(4) Continuously integrated NOx, CO, and CO_2 measurement systems.

(i) Sample probe requirements:

(A) The sample probe for continuously integrated NOx, CO, and CO_2 must be in the same plane as the continuous HC probe, but sufficiently distant (radially) from other probes and the tunnel wall so as to be free from the influences of any wakes or eddies.

(B) The sample probe for continuously integrated NOx, CO, and CO_2 must be heated and insulated over the entire length, to prevent water condensation, to a minimum temperature of 55 deg. C. Sample gas

temperature immediately before the first filter in the system must be at least 55 deg. C.

(ii) Conform to the continuous NOx, CO, or CO_2 sampling and analysis system to the specifications of Part III with the following exceptions and revisions: (A) Heat the system components requiring heating only to prevent water condensation, the minimum component temperature is 55 deg. C.

(B) Coordinate analysis system response time with CVS flow fluctuations and sampling time/test cycle offsets, if necessary.

(C) Use only analytical gases conforming to the specifications of Part III, section 12 for calibration, zero and span checks.

(D) Use a calibration curve conforming to Part III, section 21 for CO and CO_2 and Part III, section 18 for NOx for any range on a linear analyzer below 155 ppm.

(iii) Convert the chart deflections or voltage output of analyzers with non-linear calibration curves to concentration values by the calibration curve(s) specified in section 91.321 before flow correction (if used) and subsequent integration takes place.

22. [Reserved].

23. Exhaust Gas Analytical System; CVS Grab Sample.

(a) Schematic drawings. Figure 4 in Appendix A of this Part is a schematic drawing of the exhaust gas analytical system used for analyzing CVS grab "bag" samples from spark-ignition engines. Since various configurations can produce accurate results, exact conformance with the drawing is not required. Additional components such as instruments, valves, solenoids, pumps and switches may be used to provide additional information and coordinate the functions of the component systems. Other components such as snubbers, which are not needed to maintain accuracy in some systems, may be excluded if their exclusion is based on good engineering judgement.

(b) Major component description. The analytical system, Figure 4 in Appendix A of this Part, consists of a flame ionization detector (FID) or a heated flame ionization detector (HFID) for the measurement of hydrocarbons, nondispersive infrared analyzers (NDIR) for the measurement of carbon monoxide and carbon dioxide, and a chemiluminescence detector (CLD) (or heated CLD (HCLD)) for the measurement of oxides of nitrogen. The exhaust gas analytical system shall conform to the following requirements:

(1) The CLD (or HCLD) requires that the nitrogen dioxide present in the sample be converted to nitric oxide before analysis. Other types of analyzers may be used if shown to yield equivalent results and if approved in advance by the Executive Officer.

(2) If CO instruments are used which are essentially free of CO_2 and water vapor interference, the use of the conditioning column may be deleted. (See Part III, sections 17 and 20.)

(3) A CO instrument will be considered to be essentially free of CO_2 and water vapor interference if its response to a mixture of three percent CO_2 in N_2, which has been bubbled through water at room temperature, produces an equivalent CO response, as measured on the most sensitive CO range, which is less than one percent of full scale CO concentration on ranges above 300 ppm full scale or less than 3 ppm on ranges below 300 ppm full scale. (See Part III, section 17.)

(c) Alternate analytical systems. Analysis systems meeting the specifications and requirements of this Part for dilute sampling may be used upon approval of the Executive Officer.

(d) Other analyzers and equipment. Other types of analyzers and equipment may be used if shown to yield equivalent results and if approved in advance by the Executive Officer.

24. Dilute Sampling Procedure--CVS Calibration.

(a) The CVS is calibrated using an accurate flowmeter and restrictor valve.

(1) The flowmeter calibration shall be traceable to the National Institute for Standards and Testing (NIST), and will serve as the reference value (NIST "true" value) for the CVS calibration. (Note: In no case should an upstream screen or other restriction which can affect the flow be used ahead of the flowmeter unless calibrated throughout the flow range with such a device.)

(2) The CVS calibration procedures are designed for use of a "metering venturi" type flowmeter. Large radius or American Society of Mechanical Engineers (ASME) flow nozzles are considered equivalent if traceable to NIST measurements. Other measurement systems may be used if shown to be equivalent under the test conditions in this section and traceable to NIST measurements.

(3) Measurements of the various flowmeter parameters are recorded and related to flow through the CVS.

(4) Procedures used by ARB for both PDP-CVS and CFV-CVS are outlined below. Other procedures yielding equivalent results may be used if approved in advance by the Executive Officer.

(b) After the calibration curve has been obtained, verification of the entire system may be performed by injecting a known mass of gas into the system and comparing the mass indicated by the system to the true mass injected. An indicated error does not necessarily mean that the calibration is wrong, since other factors can influence the accuracy of the system (e.g., analyzer calibration, leaks, or HC hangup). A verification procedure is found in paragraph (e) of this section.

(c) PDP-CVS calibration.

(1) The following calibration procedure outlines the equipment, the test configuration, and the various parameters which must be measured to establish the flow rate of the CVS pump.

(i) All the parameters related to the pump are simultaneously measured with the parameters related to a flowmeter which is connected in series with the pump.

(ii) The calculated flow rate, in cm^3/s, (at pump inlet absolute pressure and temperature) can then be plotted versus a correlation function which is the value of a specific combination of pump parameters.

(iii) The linear equation which relates the pump flow and the correlation function is then determined.

(iv) In the event that a CVS has a multiple speed drive, a calibration for each range used must be performed.

(2) This calibration procedure is based on the measurement of the absolute values of the pump and flowmeter parameters that relate the flow rate at each point. Two conditions must be maintained to assure the accuracy and integrity of the calibration curve:

(i) The temperature stability must be maintained during calibration. (Flowmeters are sensitive to inlet temperature oscillations; this can cause the data points to be scattered. Gradual changes in temperature are acceptable as long as they occur over a period of several minutes.)

(ii) All connections and ducting between the flowmeter and the CVS pump must be absolutely void of leakage.

(3) During an exhaust emission test the measurement of these same pump parameters enables the user to calculate the flow rate from the calibration equation.

(4) Connect a system as shown in Figure 5 in Appendix A of this Part. Although particular types of equipment are shown, other configurations that yield equivalent results may be used if approved in advance by the Executive Officer. For the system indicated, the following measurements and accuracies are required:

Parameter	Symbol	Units	Sensor-readout tolerances
Barometric pressure (corrected).....	P_b.....	kPa.....	± 0.34 kPa
Ambient temperature.....	T_{EI}.....	°C.....	± 0.28 °C
Air temperature into metering venturi.....	T_{EI}.....	°C.....	± 1.11 °C
Pressure drop between inlet & throat of venturi	P_{ED}.....	kPa.....	± 0.012 kPa
Air flow.....	Q_S.....	m^3/min.	± 0.5 percent of NIST value
Air temperature at CVS pump inlet.....	P_{TI}.....	°C.....	± 1.11 °C
Pressure depression at CVS pump inlet.....	P_{PI}.....	kPa.....	± 0.055 kPa
Pressure head at CVS pump outlet	P_{PO}.....	kPa.....	± 0.055 kPa
Air temperature at CVS pump outlet (optional)	P_{YO}.....	°C.....	1.11 °C
Pump revolutions during test period.....	N.....	Revs.....	± 1 Rev.
Elapsed time for test period.....	t.....	s.....	± 0.5 s

(5) After the system has been connected as shown in Figure 5 of Appendix A of this Part, set the variable restrictor in the wide open position and run the CVS pump for 20 minutes. Record the calibration data.

(6) Reset the restrictor valve to a more restricted condition in an increment of pump inlet depression that will yield a minimum of six data points for the total calibration. Allow the system to stabilize for 3 minutes and repeat the data acquisition.

(7) Data analysis:

(i) The air flow rate, Qs, at each test point is calculated in standard cubic feet per minute 20 deg.C, 101.3 kPa from the flowmeter data using the manufacturer's prescribed method.

(ii) The air flow rate is then converted to pump flow, Vo, in cubic meter per revolution at absolute pump inlet temperature and pressure:

$$V_O = \frac{Q_s}{n} \; x \; \frac{T_p}{293} \; x \; \frac{101.3kPa}{P_P}$$

Where:

Vo=Pump flow, m^3/rev at Tp, P_P,

Qs=Meter air flow rate in standard cubic meters per minute, standard conditions are 20 deg.C, 101.3 kPa.

n =Pump speed in revolutions per minute.

Tp =Pump inlet temperature in Kelvin,=P_{TI} +273 [deg.K].

P_P =Absolute pump inlet pressure, kPa. =Pp-P_{PI}

Where:
P_P =barometric pressure, kPa.

P_{PI} =Pump inlet depression, kPa.

(iii) The correlation function at each test point is then calculated from the calibration data:

$$X_O = \frac{1}{n}\sqrt{\left(\frac{\Delta P}{P_e}\right)}$$

Where:

X_O=correlation function.
ΔP = The pressure differential from pump inlet to pump outlet, kPa.
$=P_E-P_P$.
P_E=Absolute pump outlet pressure, [kPa] $=P_B+P_{PO}$
Where:
P_{PO}=Pressure head at pump outlet, kPa (inches fluid).

(iv) A linear least squares fit is performed to generate the calibration equation which has the form:

$$V_O = D_O - M(X_O)$$

D_O and M are the intercept and slope constants, respectively, describing the regression line.

(8) A CVS system that has multiple speeds should be calibrated on each speed used. The calibration curves generated for the ranges will be approximately parallel and the intercept values, DO, will increase as the pump flow range decreases.

(9) If the calibration has been performed carefully, the calculated values from the equation will be within $\pm$ 0.50 percent of the measured value of V_O. Values of M will vary from one pump to another, but values of D_O for pumps of the same make, model and range should agree within $\pm$ three percent of each other. Calibrations should be performed at pump start-up and after major maintenance to assure the stability of the pump slip rate. Analysis of mass injection data will also reflect pump slip stability.

(d) CFV-CVS calibration.

(1) Calibration of the CFV is based upon the flow equation for a critical venturi.

(i) Gas flow is a function of inlet pressure and temperature:

$$Q_S = \frac{K_v P}{\sqrt{T_K}}$$

Where:

Q_S=flow rate [m^3/min].

K_V=calibration coefficient.

P=absolute pressure [kPa].

T_K=absolute temperature [deg.K].

(ii) The calibration procedure described in paragraph (d)(3) of this section establishes the value of the calibration coefficient at measured values of pressure, temperature and air flow.

(2) The manufacturer's recommended procedure shall be followed for calibrating electronic portions of the CFV.

(3) Measurements necessary for flow calibration are as follows:

Parameter	Symbol	Units	Tolerances
Barometric pressure (corrected).....	P_b.....	kPa.....	± 0.34 kPa
Air temperature into flow meter.....	T_{EI}.....	°C.....	± 0.28 °C
Pressure drop between inlet & throat of venturi	P_{ED}.....	kPa.....	± 0.012 kPa
Air flow.....	Q_S.....	m^3/min.	± 0.5 percent of NIST value
CVS inlet depression.....	P_{PI}.....	kPa.....	± 0.055 kPa
Pressure head at CVS pump outlet	P_{PO}.....	kPa.....	± 0.055 kPa
Temperature at venturi inlet.....	T_V.....	°C.....	± 2.22 °C

(4) Set up equipment as shown flow measuring devices and the critical flow venturi will seriously affect the accuracy in Figure 6 in Appendix A of this Part and eliminate leaks. (Leaks between the of the calibration.)

(5) Set the variable flow restrictor to the open position, start the blower, and allow the system to stabilize. Record data from all instruments.

(6) Vary the flow restrictor and make at least eight readings across the critical flow range of the venturi.

(7) Data analysis. The data recorded during the calibration are to be used in the following calculations:

(i) The air flow rate (designated as Qs) at each test point is calculated in standard cubic feet per minute from the flow meter data using the manufacturer's prescribed method.

(ii) Calculate values of the calibration coefficient for each test point:

$$K_V = \frac{Q_S \sqrt{T_V}}{P_V}$$

Q_S =Flow rate in standard cubic meter per minute, at the standard conditions of 20 deg.C, 101.3 kPa.
T_V =Temperature at venturi inlet, deg.K.
P_V =Pressure at venturi inlet, kPA =P_B-P_{PI}

Where:
P_{PI} = Venturi inlet pressure depression, kPa.

(iii) Plot K_V as a function of venturi inlet pressure. For choked flow, K_v will have a relatively constant value. As pressure decreases (vacuum increases), the venturi becomes unchoked and K_V decreases. (See Figure 7 in Appendix A of this Part.)

(iv) For a minimum of eight points in the critical region calculate an average K_V and the standard deviation.

(v) If the standard deviation exceeds 0.3 percent of the average K_V, take corrective action.

(e) CVS system verification. The following “gravimetric” technique can be used to verify that the CVS and analytical instruments can accurately measure a mass of gas that has been injected into the system. (Verification can also be accomplished by constant flow metering using critical flow orifice devices.)

(1) Obtain a small cylinder that has been charged with 99.5 percent or greater propane or carbon monoxide gas.

(2) Determine a reference cylinder weight to the nearest 0.01 grams.

(3) Operate the CVS in the normal manner and release a quantity of pure propane into the system during the sampling period (approximately five minutes).

(4) The calculations are performed in the normal way except in the case of propane. The density of propane (0.6109 kg/m\3\carbon atom is used in place of the density of exhaust hydrocarbons.

(5) The gravimetric mass is subtracted from the CVS measured mass and then divided by the gravimetric mass to determine the percent accuracy of the system.

(6) Good engineering practice requires that the cause for any discrepancy greater than ± two percent must be found and corrected.

25. CVS Calibration Frequency.

Calibrate the CVS positive displacement pump or critical flow venturi following initial installation, major maintenance or as necessary when indicated by the CVS system verification (described in Part IV, section 24(e)).

26. Dilute Emission Sampling Calculations.

(a) The final reported emission test results must be computed by use of the following formula:

$$A_{wm} = \frac{\sum (W_i \ x \ f_i)}{\sum (P_i \ x \ f_i)} \ x \ K_{Hi}$$

Where:
A_{wm}=Weighted mass emission level (HC, CO, CO_2, or NOx) for a test [g/kW-hr].
Wi=Average mass flow rate of an emission from a test engine during mode i [g/hr].
Wfi = Weighting factor for each mode i as defined in Part IV, section 10(a).
Pi = Gross average power generated during mode i [kW] calculated from the following equation (power for the idle mode shall always be zero for this calculation):

$$P_i = \frac{2\Pi}{60},000 \ x \ speed \ x \ torque$$

speed = average engine speed measured during mode i [rev./minute]
torque = average engine torque measured during mode i [N-m]
K_{hi} = Humidity correction factor for mode i. This correction factor only affects calculations for NOx and is equal to one for all other emissions. K_{Hi} is also equal to one for all two-stroke engines.

(b) The mass flow rate (Wi) of an emission for mode i is determined from the following equation:

$$W_i = Q_i \ x \ D \ x \ (C_{Di} - C_{Bi} \ x \ (1 - \frac{1}{DF_i}))$$

Where:
Qi = Volumetric flow rate of the dilute exhaust through the CVS at standard conditions [m^3/hr at STP].

D = Density of a specific emission (D_{HC}, D_{CO}, D_{CO2}, D_{NOx}) in the exhaust [g/m^3].
Dfi = Dilution factor of the dilute exhaust during mode i.
C_{di} = Concentration of the emission (HC, CO, NOx) in the dilute exhaust extracted from the CVS during mode i [ppm].
C_{bi} = Concentration of the emission (HC, CO, NOx) in the background sample during mode i [ppm].
STP = Standard temperature and pressure. All volumetric calculations made for the equations in this section are to be corrected to a standard temperature of 20 deg.C and 101.3 kPa.

(c) Densities for emissions that are to be measured for this test procedure are:
D_{HC} = 576.8 g/m^3
D_{NOx} = 1912 g/m^3
D_{CO} = 1164 g/m^3
D_{CO2} = 1829 g/m^3

(1) The value of D_{HC} above is calculated based on the assumption that the fuel used has a carbon to hydrogen ratio of 1:1.85. For other fuels, D_{HC} can be calculated from the following formula:

$$D_{HC} = \frac{M_{HC}}{R_{STP}}$$

Where:
M_{HC} = Molecular weight of the hydrocarbon molecule divided by the number of carbon atoms in the molecule [g/mole].
R_{STP} = Ideal gas constant for a gas at STP = 0.024065 [m^3- mole].

(2) The idealized molecular weight of the exhaust hydrocarbons, i.e., the molecular weight of the hydrocarbon molecule divided by the number of carbon atoms in the molecule, M_{HC} can be calculated from the following formula:

$$M_{HC} = M_C + \alpha M_H + \beta M_O$$

Where:
M_C = Molecular weight of carbon = 12.01 [g/mole].
M_H = Molecular weight of hydrogen = 1.008 [g/mole].
α = Hydrogen to carbon ratio of the test fuel.

(3) The value of D_{NOx} above assumes that NOx in entirely in the form of NO_2.

(d) The dilution factor (DF) is the ratio of the volumetric flow rate of the background air to that of the raw engine exhaust. The following formula is used to determine DF:

$$DF = 13.\frac{4}{C_{D_{HC}} + C_{D_{CO}} + C_{D_{CO_2}}}$$

Where:
$C_{D\ HC}$ = Concentration of HC in the dilute sample [ppm].
$C_{D\ CO}$ = Concentration of CO in the dilute sample [ppm].
$C_{D\ CO2}$ = Concentration of CO_2 in the dilute sample [ppm].

(e) The humidity correction factor K_H is an adjustment made to the measured NOx. This corrects for the sensitivity that a spark-ignition engine has to the humidity of its combustion air. The following formula is used to determine K_H for NOx calculations:

$$K_H = \frac{1}{1 - 0.0329\ (H - 10.71)}$$

Where:
H = Absolute humidity of the engine intake air [grams of water per kilogram of dry air].

(f) The absolute humidity of the engine intake air H is calculated using the following formula:

$$H = \frac{6.211\ P_{dew}}{P_B - (\frac{P_{dew}}{100})}$$

Where:
$_{Pew}$ = Saturated vapor pressure at the dew point temperature [kPa].
P_b = Barometric pressure [kPa].

(g) The fuel mass flow rate F_i can be either measured or calculated using the following formula:

$$F_i = \frac{M_f}{T}$$

Where:
M_F = Mass of fuel consumed by the engine during the mode [g].
T = Duration of the sampling period [hr].

(h) The mass of fuel consumed during the mode sampling period, M_{FUEL} can be calculated from the following equation:

$$M_f = \frac{G_s}{R_2 \ x \ 273.15}$$

Where:
G_S = Mass of carbon measured during the mode sampling period [g].
R_2 = The fuel carbon weight fraction, which is the mass of carbon in fuel per mass of fuel [g/g].

(i) The grams of carbon measured during the mode G_S can be calculated from the following equation:

$$G_S = \frac{12.011 \ x \ HC_{mass}}{12.011 + 1.008\alpha} + 0.429 \ CO_{mass} + 0.273 \ CO_{2_{mass}}$$

Where:
HC_{mass} = mass of hydrocarbon emissions for the mode sampling period [g].
Co_{mass} = mass of carbon monoxide emissions for the mode sampling period [g].
CO_2 mass = mass of carbon dioxide emissions for the mode sampling period [g].
α = The atomic hydrogen to carbon ratio of the fuel.

27. Catalyst Thermal Stress Resistance Evaluation.

(a) (1) The purpose of the evaluation procedure specified in this section is to determine the effect of thermal stress on catalyst conversion efficiency. The thermal stress is imposed on the test catalyst by exposing it to quiescent heated air in an oven. The evaluation of the effect of such stress on catalyst performance is based on the resultant degradation of the efficiency with which the conversions of specific pollutants are promoted. The application of this evaluation procedure involves the several steps that are described in the following paragraphs.

(2) The engine manufacturer need not submit catalyst conversion efficiency data for pollutants that the catalyst being tested was not designed to reduce/oxidize. The engine manufacturer must specify the pollutants that the catalyst will be converting and submit catalyst conversion efficiency data on only those pollutants.

(b) Determination of initial conversion efficiency.

(1) A synthetic exhaust gas mixture having the composition specified in section 29 is heated to a temperature of 450 deg.C ± 5 deg.C and passed through the new test catalyst or, optionally, a test catalyst that has been exposed to temperatures less than or equal to 500 deg.C for less than or equal to two hours, under flow conditions that are representative of anticipated in-use conditions.

(2) The concentration of each pollutant of interest, that is, hydrocarbons, carbon monoxide, or oxides of nitrogen, in the effluent of the catalyst is determined by means of the instrumentation that is specified for exhaust gas analysis in Part III.

(3) The conversion efficiency for each pollutant is determined by:

(i) Subtracting the effluent concentration from the initial concentration,

(ii) Dividing this result by the initial concentration,

(iii) Multiplying this result by 100 percent.

(c) Imposition of thermal stress.

(1) The catalyst is placed in an oven that has been pre-heated to 1000 deg.C and the temperature of the air in the oven is maintained at 1000 deg.C ± 10 deg.C for six hours. Optionally, the catalyst may instead be placed in an oven having a 90% nitrogen/10% water vapor environment that has been pre-heated to at least 850 deg.C and the temperature of the nitrogen/water vapor environment in the oven is maintained at 850 deg.C ± 10 deg.C for six hours.

(2) The catalyst is removed from the oven and allowed to cool to room temperature.

(d) Determination of final conversion efficiency. The steps listen in paragraph (b) of this section are repeated.

(e) Determination of conversion efficiency degradation.

(1) The final conversion efficiency determined in paragraph (c) of this section is subtracted from the initial conversion efficiency determined in paragraph (b) of this section.

(2) This result is divided by the initial conversion efficiency.

(3) This result is multiplied by 100 percent.

(f) Determination of compliance with degradation limit. The percent degradation determined in paragraph (e) of this section must not be greater than 20 percent.

Appendix A to Part IV -- Figures.

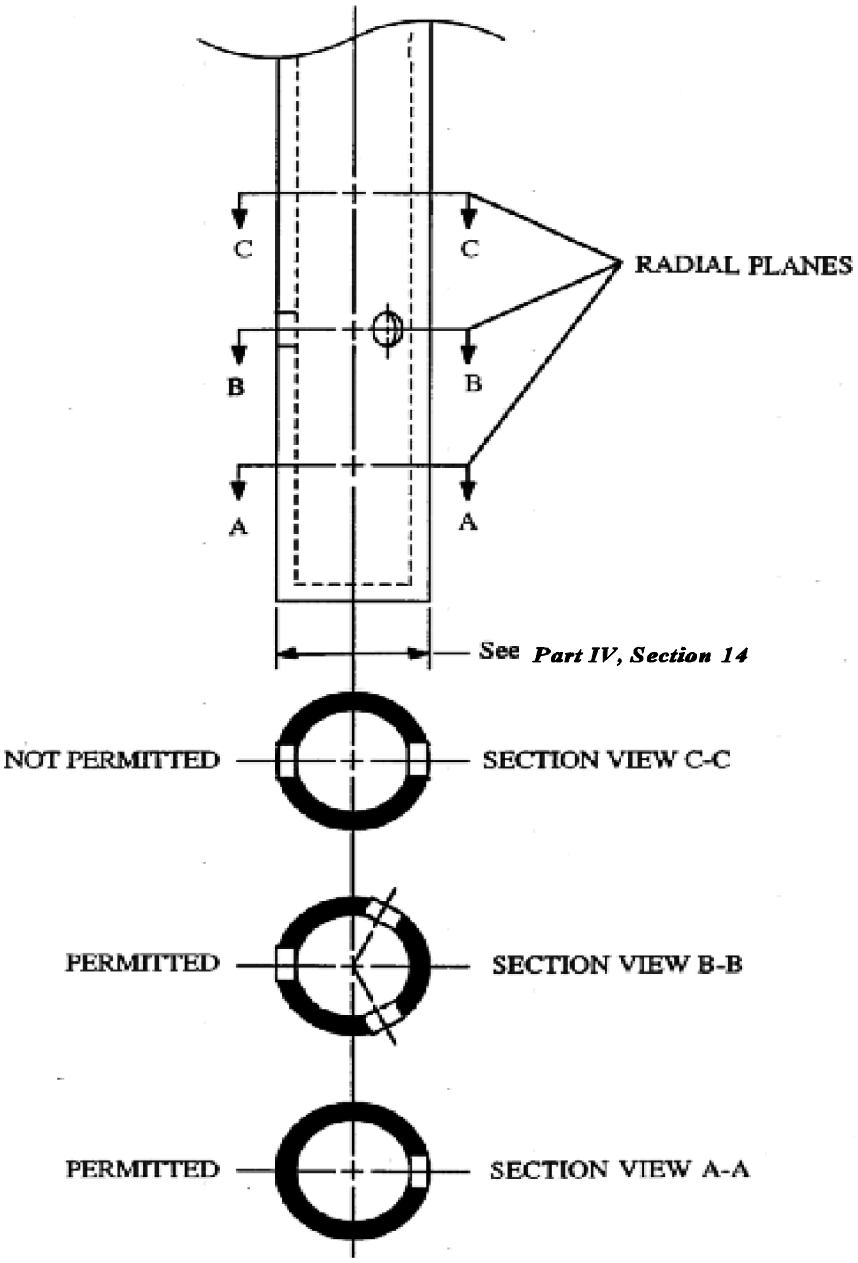

Figure 1.—Sample Probe and Typical Hole Spacings

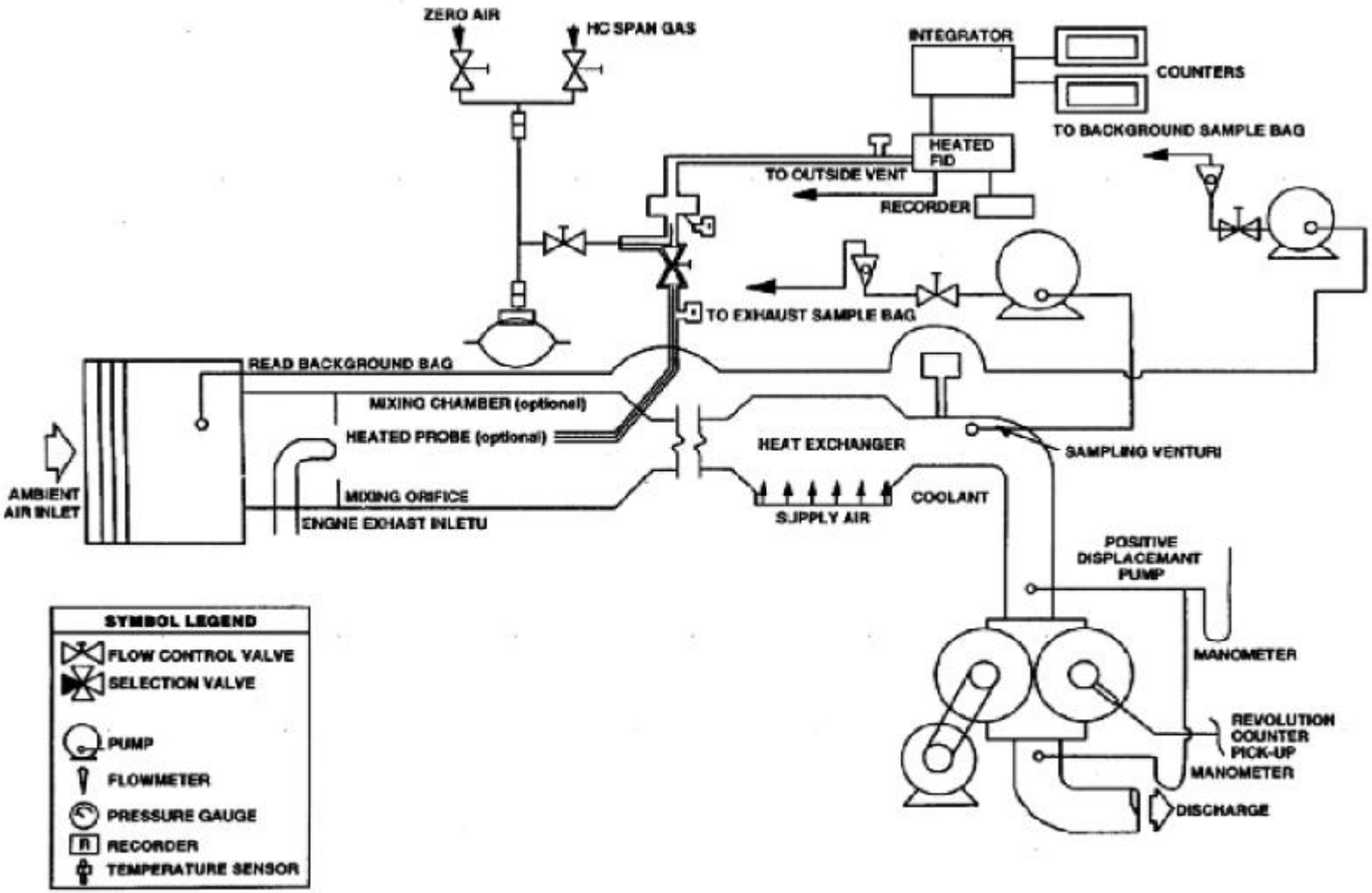

Figure 2 — Gaseous Emissions Sampling System (PDP-CVS) Showing both grab bag sampling and continous sampling

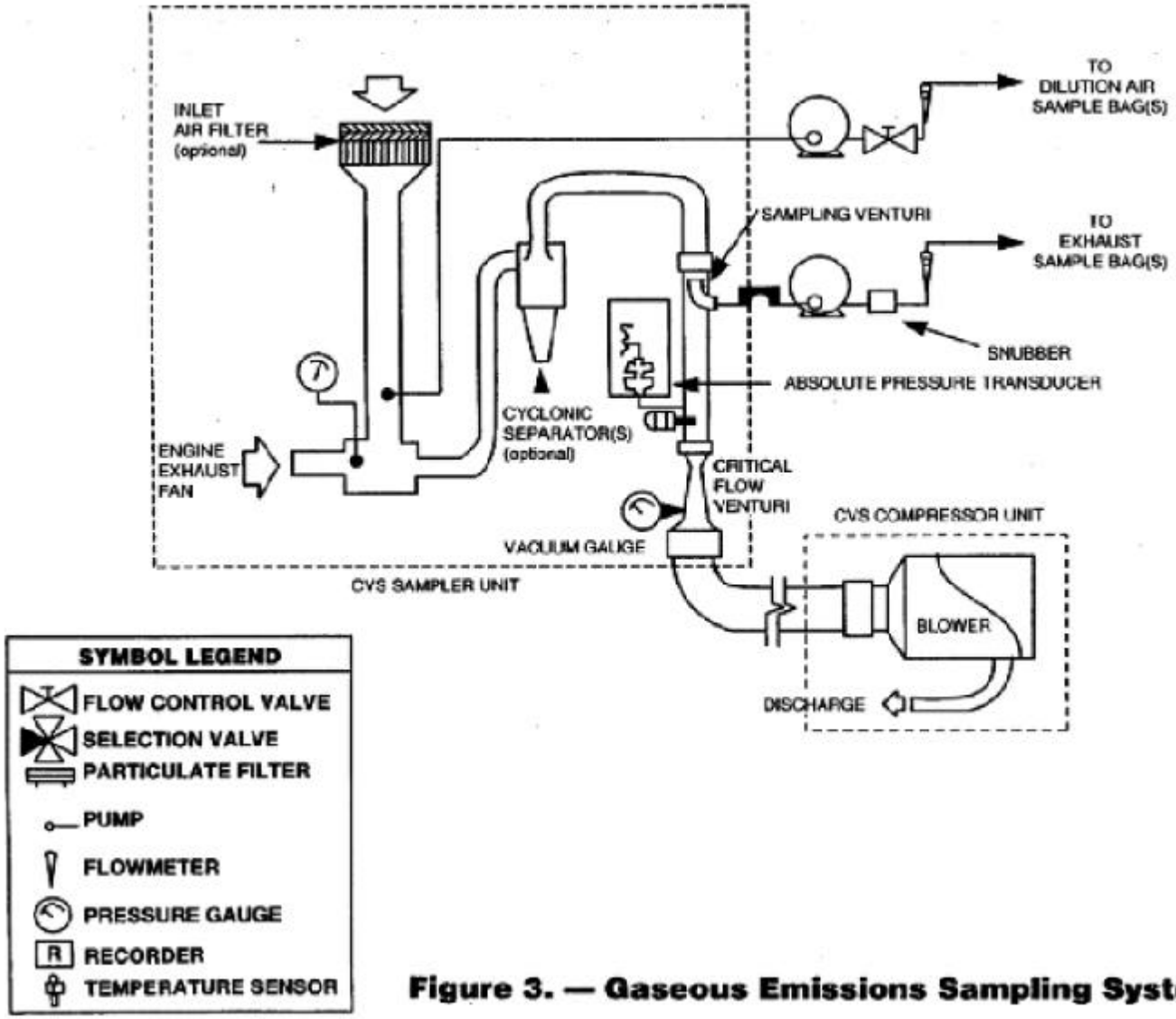

Figure 3. — Gaseous Emissions Sampling System (CVF-CVS)

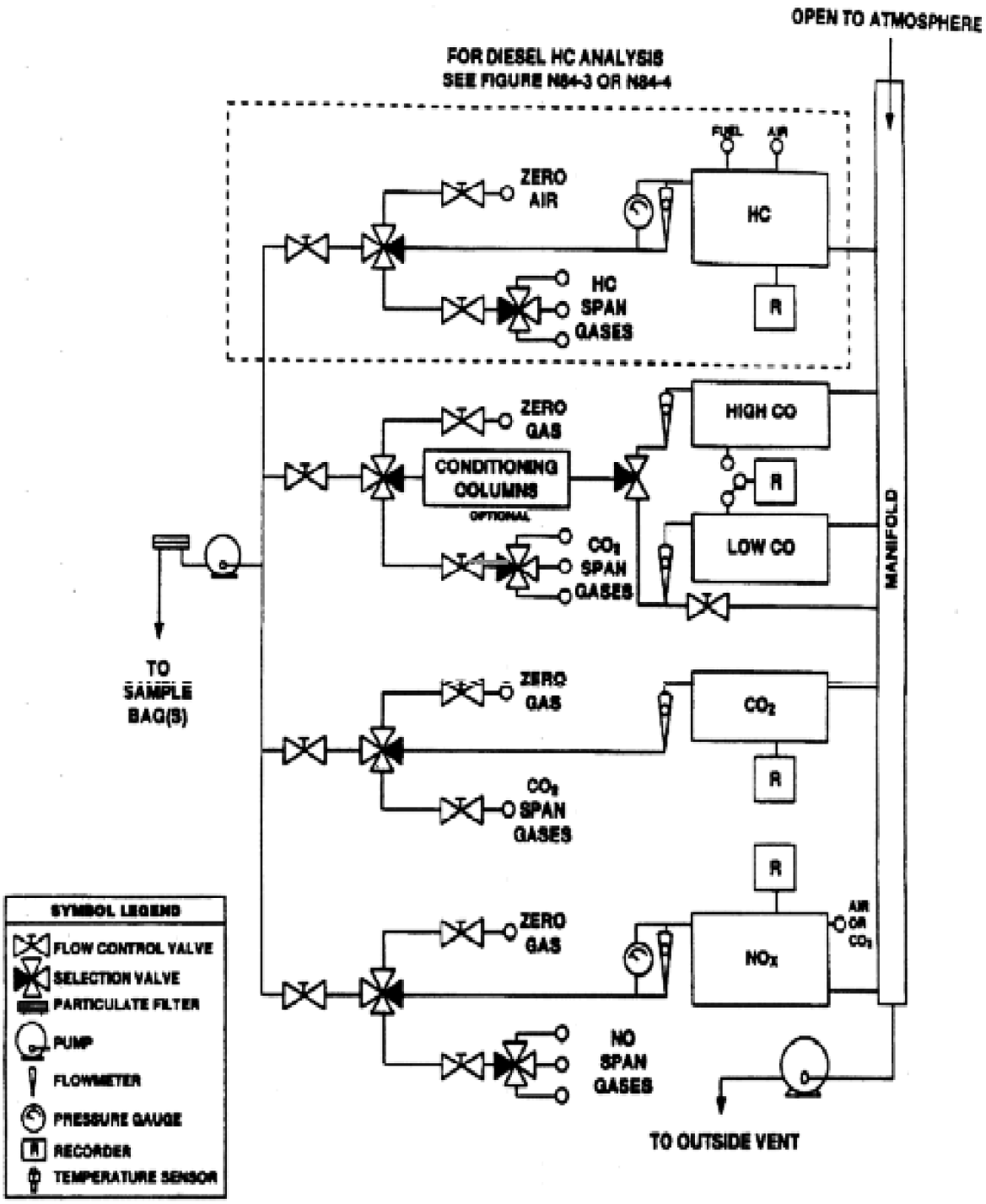

Figure 4. — Exhaust Gas Analytical System

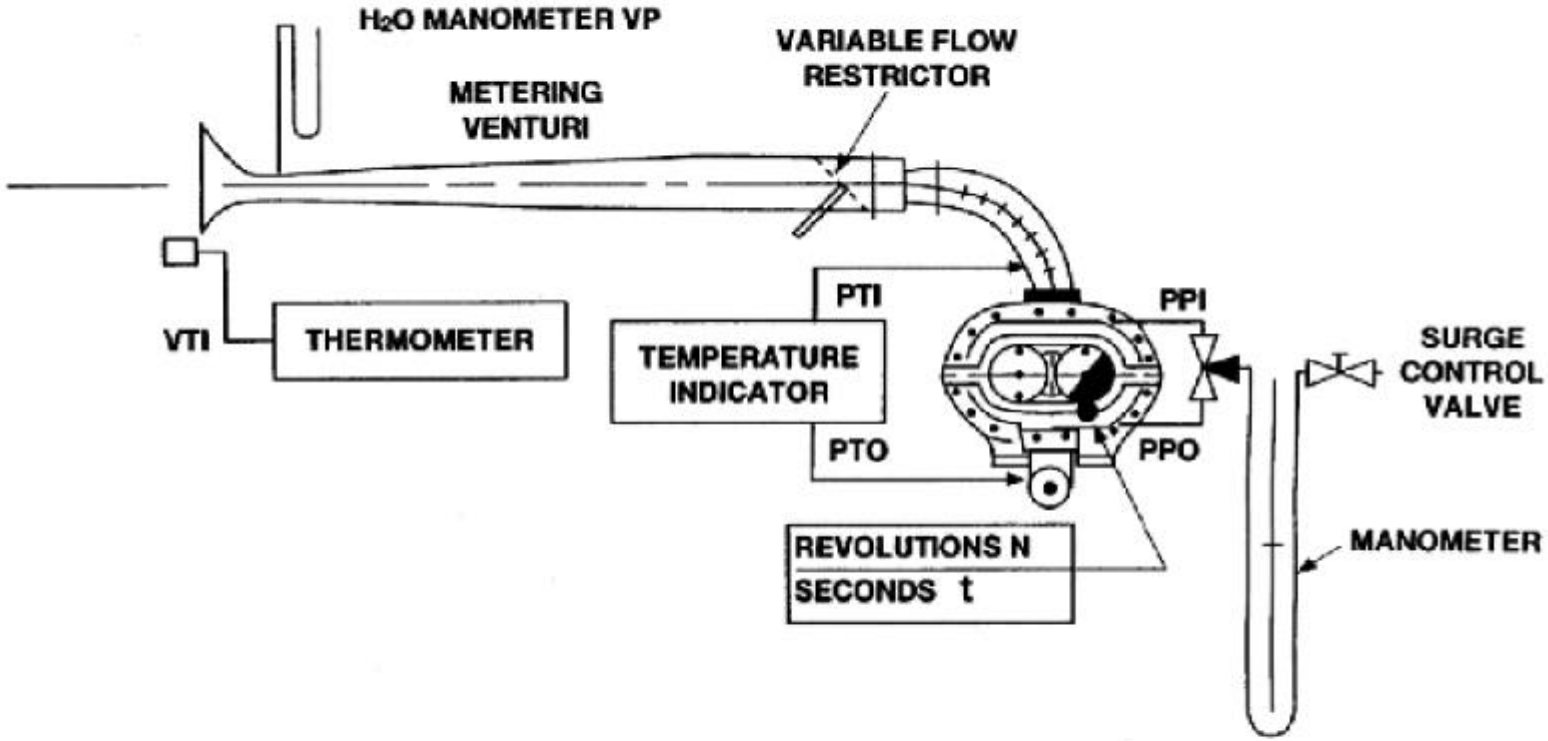

Figure 5. — PDP-CVS Calibration Configuration

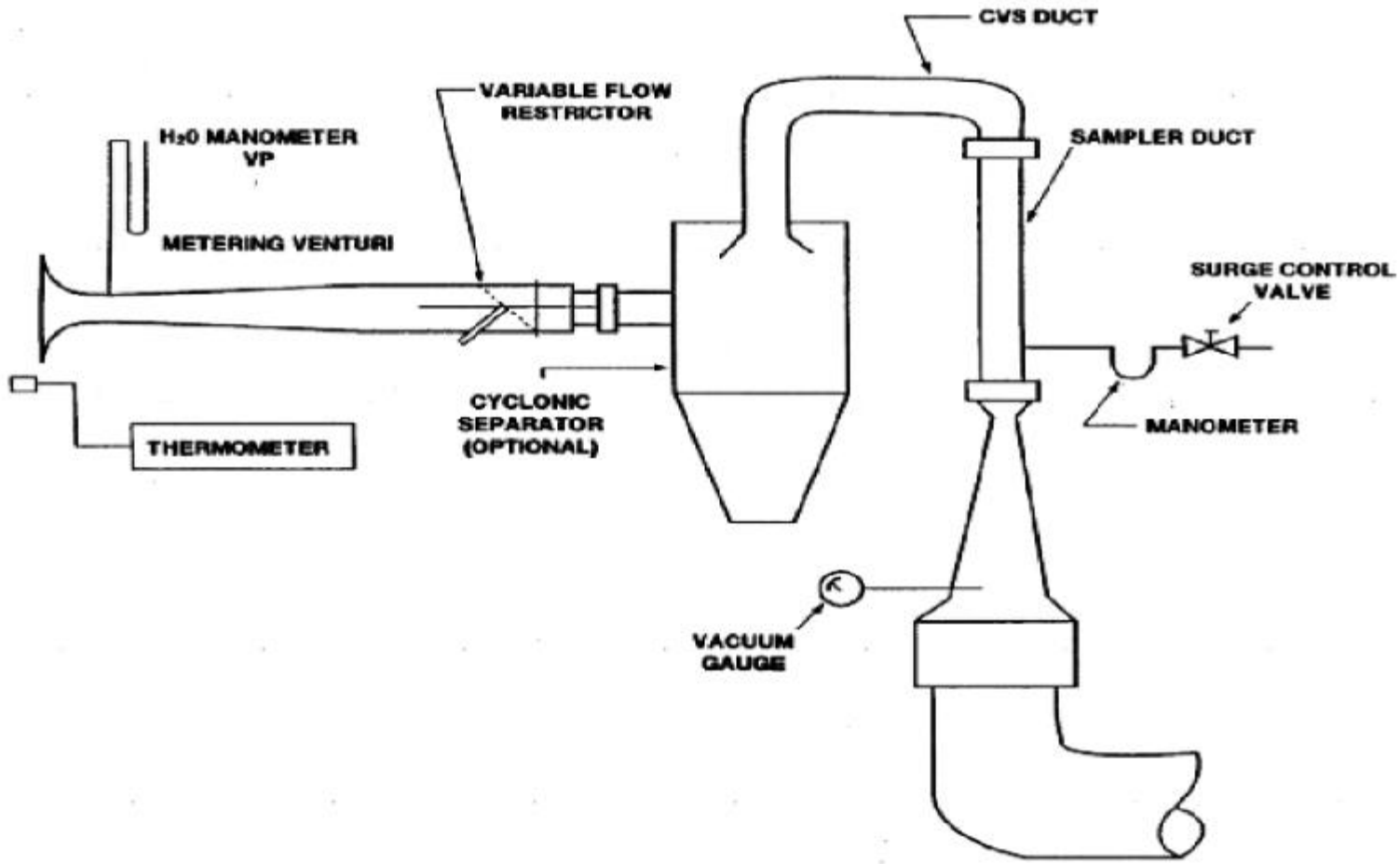

Figure 6. — CFV-CVS Calibration Configuration

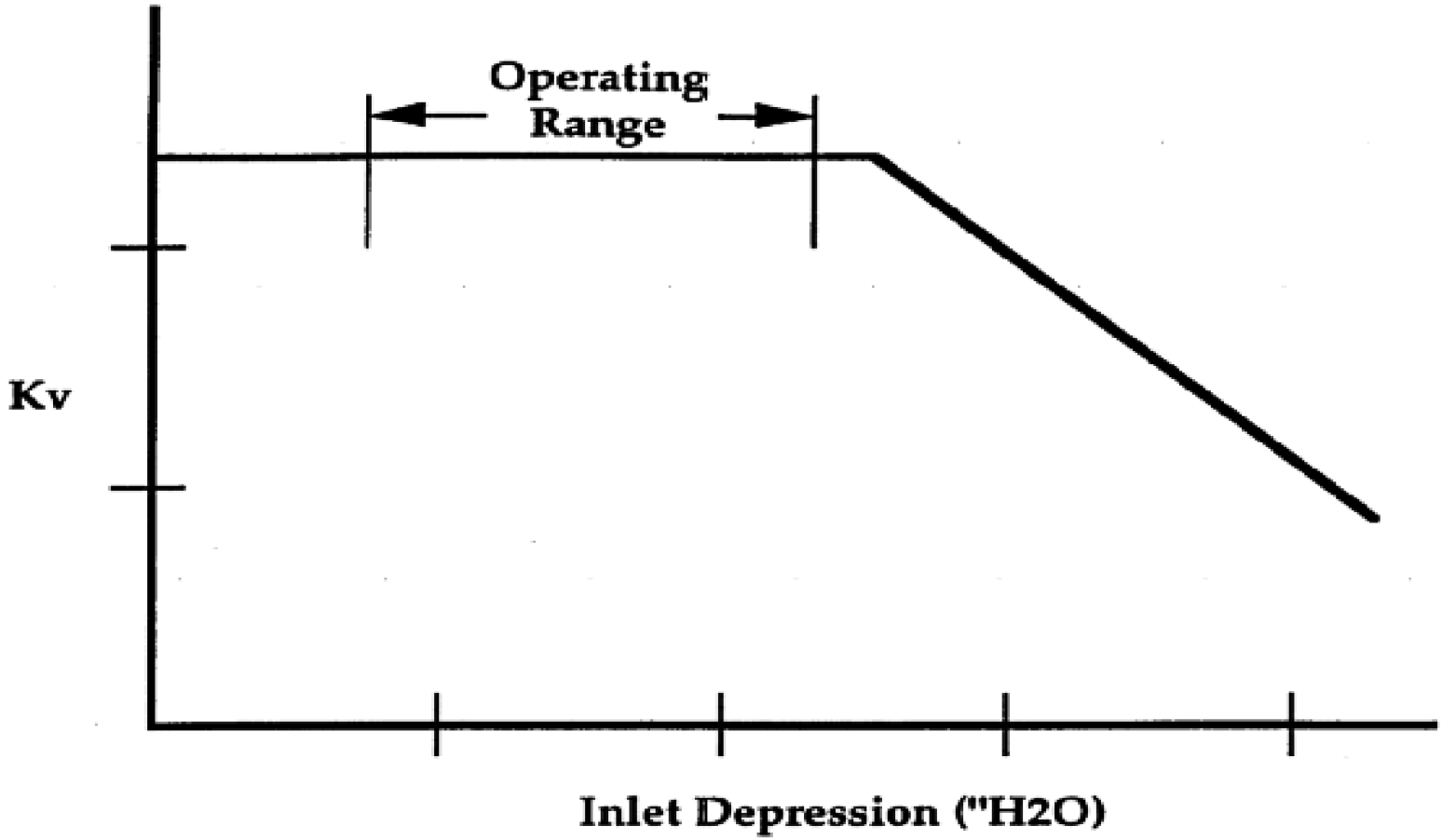

Figure 7.—Sonic Flow Choking