Greenhouse Gas Performance Analysis for Commercial Buildings with Large Refrigeration and Air Conditioning Systems

Prepared by ICF International

Principal Investigators:

Pamela Mathis

Mark Wagner

Prepared for:

The California Air Resources Board and the California Environmental Protection Agency

Contract 09-306

Final Report

May 2012

Disclaimer

The statements and conclusions in this Report are those of the contractor and not necessarily those of the California Air Resources Board. The mention of commercial products, their source, or their use in connection with material reported herein is not to be construed as actual or implied endorsement of such products.

Acknowledgments

ICF International thanks the following individuals and organizations for their advice and assistance during the project.

Glenn Gallagher (California Air Resources Board)

Pamela Gupta (California Air Resources Board)

Martha Brook (California Energy Commission)

Doug Scott (VaCom Technologies)

Brian Dobbs (VaCom Technologies)

Jon McHugh (McHugh Energy Consultants Inc.)

Cathy Chappell (Heschong Mahone Group, Inc. [HMG])

ICF also acknowledges and thanks the following individuals within the ICF organization for being part of its project team and assisting with the delivery of this project:

Pamela Mathis (ICF International)

Mark Wagner (ICF International)

Haider Khan (ICF International)

Emily Herzog (ICF International)

This report was submitted in fulfillment of Project 09-306: ***Greenhouse Gas Performance Analysis for Commercial Buildings with Large Refrigeration and Air Conditioning Systems*** by ICF International under the sponsorship of the California Air Resources Board. Work was completed as of May 10, 2012.

This page intentionally left blank.

Table of Contents

Disclaimer ii
Acknowledgements iii
Table of Contents v
List of Tables vi
List of Figures vii
Abstract viii
Executive Summary ES-1
1. Introduction 1
2. Refrigerant Leak Reduction Measures 3
2.1 Proposed Leak Reduction Measures 3
2.2 Net Impact of Leak Reduction Measures 8
2.3 Cost-Effectiveness Analysis 10
3. Energy Conservation Measures 13
3.1 Energy Conservation Measures Background and Overview 13
3.2 Energy Conservation Measures Evaluated 13
4. Comparison of Energy Efficiency Results Generated by EnergyPlus and DOE-2.2R 19
4.1 Introduction to Energy Model Comparison 19
4.2 Analysis Overview 20
4.3 Summary of Baseline Comparison 21
4.4 Summary of Results by Measure 27
4.5 Summary of Energy Comparison Results 44
4.6 Discussion of Energy Model Comparison 45
4.7 Conclusion of Energy Model Comparison 46
5. Summary and Conclusions 47
6. Recommendations 51
7. References 53
8. Glossary of Terms, Abbreviations, and Symbols 57

Table of Contents (Continued)

Appendix A – Additional Options to Reduce Supermarket GHG Emissions from Refrigerant Usage 61

Appendix B – Codes and Standards Enhancement Initiative (CASE) Report..... 63

List of Tables

ES-1. Cost, Savings, and Reductions, Per Year, Per Store, from ECMs and LRMs ES-3

2-1: Summary of Store Types and Key Assumptions 3

2-2. Summary of Annual and Lifetime GHG Savings Per Store 9

2-3: Summary of Total Annual GHG Reductions for California ($MTCO_2eq$) 9

2-4. Leak Reduction Measure Cost Assumptions and Calculations 11

2-5. Summary of Costs and Benefits per Store 12

3-1. Supermarket size and system description for analysis prototypes.....14

3-2. Energy Conservation Measures, Energy and GHG Reductions, Per Store, Per Year.....15

3-3. Energy Conservation Measures, Cost and Savings.....16

4-1: Description of Prototype Stores 20

4-2. Climate Zones Modeled 20

4-3. Source of Energy Consumption and Output Categories of DOE 2.2R and Energy Plus...21

4-4. Baseline energy consumption results for MAC store prototype by energy source.....22

4-5: Baseline energy consumption results for MAD store prototype by energy source 23

4-6: Baseline energy consumption results for MEC store prototype by energy source 24

4-7: Baseline energy consumption results for MFD store prototype by energy source 25

4-8. Baseline energy consumption results for MFC store prototype by energy source 26

4-9. Analysis results for floating head pressure 27

4-10. Analysis results for condenser specific efficiency.....29

4-11: Analysis results for floating suction pressure 31

4-12: Analysis results for mechanical subcooling.....33

4-13. Analysis results for display case lighting control 34

4-14. Analysis results for liquid-suction heat exchangers.....36

4-15. Analysis results for refrigerant heat recovery 38

4-16. Analysis results for indirect cooling 40

4-17. Analysis results for walk-in variable speed fan control.....42

5-1. Cost, Savings, and Reductions, Per Year, Per Store, from ECMs and LRMs 47

List of Figures

ES-1. Annual GHG Reductions in CA from Supermarket ECMs and LRMs ES-4
2-1. Total Annual GHG Reductions for California 2014-2030.....10
3-1. Supermarket Energy Conservation Measures, Annual GHG Reductions 17
4-1: Electricity savings results for MAC store prototype 22
4-2. Electricity savings results for MAD store prototype 23
4-3. Electricity savings results for MEC store prototype 24
4-4. Electricity savings results for MFD store prototype 25
4-5. Electricity savings results for MFC store prototype 26
4-6. Electricity savings results for floating head pressure by store type.....28
4-7. Electricity savings results for floating head pressure by climate zone 28
4-8. Electricity savings results for condenser specific efficiency by store type.....30
4-9. Electricity savings results for condenser specific efficiency by climate zone.....30
4-10. Electricity savings results for floating suction pressure by store type.....32
4-11. Electricity savings results for floating suction pressure by climate zone 32
4-12. Electricity savings results for mechanical subcooling by store type 33
4-13. Electricity savings results for mechanical subcooling by climate zone.....34
4-14. Electricity savings results for display case lighting control by store type.....35
4-15. Electricity savings results for display case lighting control by climate zone 36
4-16. Electricity savings results for liquid-suction heat exchangers by store type 37
4-17. Electricity savings results for liquid-suction heat exchangers by climate zone.....38
4-18. Electricity savings results for refrigerant heat recovery by store type.....39
4-19. Electricity savings results for refrigerant heat recovery by climate zone.....40
4-20. Electricity savings results for indirect cooling by store type.....41
4-21. Electricity savings results for indirect cooling by climate zone 42
4-22. Electricity savings results for walk-in variable speed fan control by store type 43
4-23. Electricity savings results for walk-in variable speed fan control by climate zone.....44
4-24. Average electricity savings results for all measures 44
4-25. Average natural gas savings results for all measures.....45
5-1. Annual GHG Reductions in CA from Supermarket ECMs and LRMs 48

Abstract

Large refrigeration and air-conditioning systems used in commercial buildings were evaluated to determine if greenhouse gas emissions could be reduced from both the indirect greenhouse gas emissions from energy usage, and from direct greenhouse gas emissions from high-global warming potential refrigerant leaks. Supermarkets were the primary business type to use both large amounts of energy and emit significant amounts of refrigerant. Energy conservation measures and refrigerant leak reduction measures were assessed for technical feasibility and cost-effectiveness. Measures that were both commercially available and cost-effective were recommended for inclusion into the California Building Code Title 24. Greenhouse gas reductions of 1.2 million metric tonnes of carbon dioxide equivalents can be achieved annually by applying the assessed measures, at a cost savings of between $15,000 and $75,000 annually for each facility, depending upon the size of the supermarket, with larger supermarkets saving more money.

Executive Summary

Background

The California Global Warming Solutions Act of 2006 (AB 32) requires greenhouse gas (GHG) emissions in California to be reduced to 1990 levels by 2020. To achieve GHG reduction goals, the California Air Resources Board (ARB) is considering policies to reduce emissions of high global warming potential (GWP) gases—including ozone-depleting substances (ODS) as well as ODS substitutes such as hydrofluorocarbons (HFCs), which are used in a wide variety of applications, including refrigeration and air-conditioning (AC), insulating foams, fire protection equipment, solvents, and consumer aerosol propellants. Currently, high-GWP gases account for 3% of California's total GHG emissions, but are projected to rise to nearly 8% by 2020, as these gases become increasingly adopted as alternatives for ODS being phased-out under the *Montreal Protocol on Substances that Deplete the Ozone Layer*.

In the December 2008 Scoping Plan for AB 32, the measure titled "Specifications for Commercial and Industrial Refrigeration" describes potential specifications that will result in reductions of GHGs by reducing both refrigerant charge (capacity) size and leak rates of large refrigeration and AC systems; and also by reducing indirect GHG emissions from energy production by reducing the amount of energy required for commercial and industrial refrigeration and AC systems. The specifications are intended to inform and help develop performance standard for the Title 24 building code to regulate the energy efficiency and refrigerant emissions of new and retrofitted commercial buildings with energy systems containing large volumes of refrigerants such as supermarkets, grocery stores, refrigerated warehouses, retail stores, and office buildings. The performance standards for new refrigeration/AC equipment would complement existing leak inspection and repair requirements for existing refrigeration/AC equipment as required by the CARB Refrigerant Management Program regulations which became effective in January 2011.

This research study is intended to support the initial Scoping Plan measure by identifying cost-effective energy conservation measures, refrigerant leak reduction measures, and refrigeration systems that result in a lower overall total equivalent warming impact (TEWI) for facilities that use both significant amounts of high-GWP refrigerants and energy.

Methods

This study assessed current (baseline) energy usage and refrigerant emissions from commercial (supermarket) facilities that use both large amounts of energy and high-GWP refrigerants. Specifically, the Department of Energy (DOE) energy modeling program DOE 2.2R was used to estimate energy usage from various types of supermarket refrigeration systems that are commonly used in these facilities. Energy usage was then compared to average refrigerant emissions from each system type as estimated using data reported under the South Coast Air Quality Management District's Rule 1415, "Reduction of Refrigerant Emissions from Stationary Refrigeration and Air Conditioning Systems" as well as information available in literature and via stakeholder consultation. A detailed description of the methodology used to estimate emissions can be found as an appendix to the Codes and Standards Enhancement (CASE) report on Supermarket Refrigeration.

Refrigerant leak reduction measures were assessed by reviewing available guidance on best practices for equipment design and installation from equipment manufacturers, refrigeration system and HVAC technicians, the U.S. EPA GreenChill Program, and professional technical societies including the Air-Conditioning, Heating, and Refrigeration Institute (AHRI), and the American Society of Heating, Refrigerating and Air-Conditioning Engineers (ASHRAE).

Results

Two business types were identified that emitted both large amounts of high-GWP refrigeration and used significant amounts of energy; they were cold storage warehouses and supermarkets. Cold storage warehouses had previously been included for comprehensive energy reduction measures in Title 24, which left supermarkets as the business type which would result in the greatest benefit for measures to reduce direct GHG emissions from refrigerant leaks and to reduce indirect GHG emissions from energy usage (electricity and natural gas heating).

Energy conservation measures (ECMs) were identified and proposed for inclusion in the 2013 Title 24, Section 6 Energy Code, which would apply to new supermarkets, and new supermarket refrigeration systems built or installed after January 2014. The measures are described in detail in the Codes and Standards Enhancement (CASE) section of this report. The proposed cost-effective ECMs include:

- Display case lighting controls
- Reclaim waste heat from refrigerant systems
- Mechanical subcooling
- Floating suction pressure efficiency
- Condenser specific efficiency
- Floating head pressure
- Variable fan speed
- Variable set point condenser

The following energy conservation measures were assessed and rejected as not cost-effective:

- LED lighting on display cases
- Night covers on open display cases
- Evaporator coil specific efficiency
- Liquid-suction heat exchanger
- Walk-in (cooler) variable speed fan efficiency
- Prohibition of hot gas defrost

Leak reduction measures (LRMs) for the refrigeration system design and installation phase were identified for inclusion into the 2013 Title 24, Section 11 Green Building Code, and include measures for leak-tight piping and valves; corrosion-resistant service cases; refrigerant receiver level indicators, and pressure and vacuum testing to ensure leak-tight equipment installation.

The ECMs and LRMs will result in significant reductions in energy and refrigerant use, and in overall net savings for supermarkets, as shown in Table ES-1, which presents lifetime costs and costs savings using a 3% discount rate and an assumed equipment lifetime of 15-years. On average, it is estimated that collectively the measures will enable supermarkets to reduce refrigerant use by 2%, electricity use by 8%, and natural gas use by 85%. Note that for the purposes of Title 24 measures, all retail food facilities with less than 8,000 square feet of retail space are exempt from the measures.

To facilitate cost-benefit analysis, supermarkets were grouped into the following three categories by size: small (8,000 – 60,000 square feet), medium (60,001 – 149,999 square feet), and large (big box) (150,000 or more square feet).

Table ES-1. Cost, Savings, and Reductions, Per Year, Per Store, from ECMs and LRMs

Cost, Savings, and Reductions Category	Small	Medium	Large (Big Box)
Energy Conservation Measures (ECMs) (per store)			
Initial added cost of ECMs	$51,069	$136,638	$167,961
Annual Savings of ECMs	$17,975	$62,935	$79,754
Net Annualized Savings of ECMs	$14,570	$53,826	$68,556
Electricity reductions (kWh)	78,618	272,255	322,054
Natural gas reductions (therms)	7,573	26,572	35,118
GHG Annual Reductions ($MTCO_2E$)	51	178	218
Cost of GHG Reduction ($/$MTCO_2E$)	$(295)	$(313)	$(338)
Leak Reduction Measures (LRMs) (per store)			
Initial added cost of LRMs	$4,930	$6,780	$7,630
Annualized Savings of LRMs	$1,599	$5,481	$6,562
Net Annualized Savings of LRMs	$1,270	$5,029	$6,053
Refrigerant Leak Reductions (lbs.)	11	56	68
GHG Annual Reductions ($MTCO_2E$)	20	100	123
Cost of GHG Reduction ($/$MTCO_2E$)	$(48)	$(39)	$(38)
ECMs and LRMs Totals			
Net Annualized Savings ECMs + LRMs, (average savings on a per store basis)	$15,840	$58,855	$74,609
Number of Stores (2010 baseline)	500	3,600	400
Annual Savings, all stores, by full implementation in 2029 (2011 $)	$9.5 million	$253 million	$35.5 million

The greenhouse gas (GHG) emission reductions resulting from the measures are estimated at 0.6 million metric tons of carbon dioxide equivalents ($MMTCO_2E$) annually by 2020, and increasing to 1.2 $MMTCO_2E$ annually by 2030 as older existing refrigeration systems are replaced.

Annual GHG emission reductions from 2014 to 2030 are presented in Figure ES-1.

Figure ES-1. Annual GHG Reductions in CA from Supermarket ECMs and LRMs.

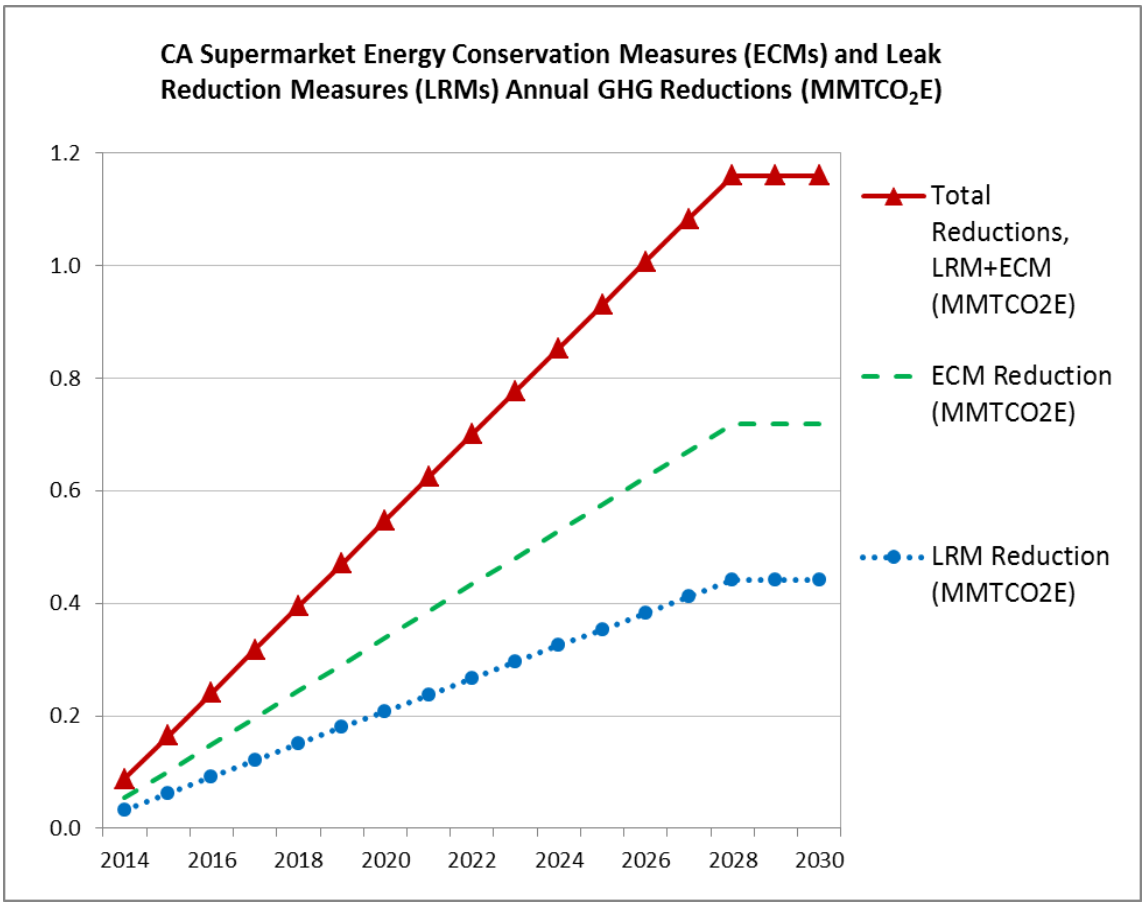

Conclusions

Supermarket energy conservation measures and refrigerant leak reduction measures are cost-effective means of reducing overall GHG emissions from the retail food sector. All measures assessed are currently available for use in new supermarket construction or refrigeration equipment replacement. Although the significant cost savings over the lifetime of the equipment would appear to be sufficient incentive to use the ECMs and LRMs without any mandatory regulations, the high initial added cost ($56,000 - $176,000) per store may be a barrier to implementation of these measures to many supermarkets.

Recommendations

The ECMs and LRMs analyzed in this study are recommended for inclusion in the Title 24 Building Code 2013 updates (effective January 1, 2014). The measures would apply to retail food supermarkets with more than 8,000 square feet, and would only apply to new supermarket construction or new refrigeration systems installed in existing supermarkets. The measures are not simple drop-in replacements and changes, and are therefore not recommended for equipment retrofit while the existing equipment is still functional.

Additional performance measures should be investigated for supermarkets and other business types that use both large amounts of energy and high-GWP refrigerants. The performance measures would be developed by measuring the cumulative impact of both energy use and refrigerant GHG emissions to give an overall total equivalent warming impact, or "carbon footprint" goal for facilities. The performance measures would be helpful as a common denominator to assess the best approaches where energy use and refrigerant GHG impacts may be in conflict, for example, when a low-GHG refrigerant system, such as a carbon dioxide system, may use more electricity than a conventional system using a high-GHG refrigerant. Additionally, businesses would be able to meet a performance measure using the means they deem best for a given facility, either by reducing energy use, using low-charge refrigerant systems, using lower-GWP refrigerants, or a combination of approaches.

This page intentionally left blank.

1. Introduction

The California Global Warming Solutions Act of 2006 (AB 32) requires greenhouse gas (GHG) emissions in California to be reduced to 1990 levels by 2020. To achieve GHG reduction goals, the California Air Resources Board (ARB) is considering policies to reduce emissions of high global warming potential (GWP) gases—including ozone-depleting substances (ODS) as well as ODS substitutes such as hydrofluorocarbons (HFCs), which are used in a wide variety of applications, including refrigeration and air-conditioning (AC), insulating foams, fire protection equipment, solvents, and consumer aerosol propellants. Currently, high-GWP gases account for 3% of California's total GHG emissions, but are projected to rise to nearly 8% by 2020, as these gases become increasingly adopted as alternatives for ODS being phased-out under the *Montreal Protocol on Substances that Deplete the Ozone Layer*.

Due to extensive research beginning in the 1970s on the stratospheric ozone depletion issue (and continuing through the present), it has become well-established that refrigerant emissions of ODS such as chlorofluorocarbons (CFCs) and hydrochlorofluorocarbons (HCFCs) are not only ozone-depleting, but most have high-global warming potentials as well, with GWPs typically between 1800 and 11000 (UNEP, 2010). Although the Montreal Protocol has succeeded in the phase-out of CFCs and HCFCs, the most common replacement refrigerants are the hydrofluorocarbons (HFCs), which are not ozone-depleting, but in most cases, also have very high GWPs ranging from 1400 to 3900 (IPCC, 2007). In some cases, the HFC replacement to the ODS refrigerant actually has a greater GWP than the refrigerant it replaced. For example, a common replacement to HCFC-22, with a GWP of 1,810, is R-404A, a blend of HFCs with an overall GWP of 3,900, which is a 115% increase in the GWP, or more than double the net GHG forcing effect.

ARB identified several potential measures to reduce high-GWP emissions from refrigerants, which were included in the December 2008 Scoping Plan for AB-32. Among these are comprehensive measures for mobile air-conditioning refrigerant emissions (not covered in this study), and measures for stationary refrigeration and air-conditioning refrigerant emissions (Measure H-6 "High GWP Reductions from Stationary Sources"). Stationary source refrigerant reduction measures for the following sectors were included: Residential Refrigeration Early Retirement Program, Refrigerant Tracking/Reporting/Repair/Deposit Program, and Specifications for Commercial and Industrial Refrigeration Systems.

The Residential Refrigeration program is currently on hold as of this document's publication date, but its intended purpose is to expand the existing Responsible Appliance Disposal (RAD) program as implemented by the U.S. EPA. The Refrigerant Tracking Program evolved to the currently implemented Refrigerant Management Program, which requires commercial stationary facilities using more than 50 pounds of high-GWP refrigerant to inspect for leaks and repair them in a timely manner, and also has requirements for record-keeping, registration, and reporting of refrigerant usage to ARB on an annual basis. The Scoping Plan measure for Specifications for Commercial and Industrial Refrigeration is the subject of this research report.

The proposed Scoping Plan measure "Specifications for Commercial and Industrial Refrigeration" describes potential specifications that will result in reductions of GHGs by reducing refrigerant charge size, leak rates, and/or refrigerant GWP of large refrigeration and AC systems. Indirect GHG emissions from energy production can also be reduced by reducing the amount of energy required to operate commercial and industrial refrigeration and AC systems. The specifications are intended to inform and help develop performance standard for the Title 24 building code to regulate the energy efficiency and refrigerant emissions of new and retrofitted commercial buildings with energy systems containing large volumes of refrigerants such as supermarkets,

grocery stores, refrigerated warehouses, retail stores, and office buildings. The performance standards for new refrigeration/AC equipment would complement existing leak inspection and repair requirements for existing refrigeration/AC equipment as required by the ARB Refrigerant Management Program regulations, which became effective in January 2011.

This research study is intended to support the initial Scoping Plan measure by identifying cost-effective energy conservation measures, refrigerant leak reduction measures, and refrigeration systems that result in a lower overall total equivalent warming impact (TEWI) for facilities that use both significant amounts of high-GWP refrigerants and energy.

The key assumption of the research study is that significant GHG reductions can be achieved in the commercial sectors that use large amounts of high-GWP refrigerants and energy. The reductions can be made two-fold: first from direct GHG reductions by reducing refrigerant emissions; and second from indirect GHG reductions by reducing energy usage. It is also assumed that the GHG reductions can be made in a cost-effective manner.

ARB had not conducted any previous studies on the subject of refrigerant use and potential GHG reductions from energy efficiency. ARB has completed two studies that do assess GHG impacts of stationary refrigeration and AC equipment. The first is "Inventory of Direct and Indirect GHG Emissions from Stationary Air conditioning and Refrigeration Sources, with Special Emphasis on Retail Food Refrigeration and Unitary Air Conditioning", ARB research contract 06-325 (ARMINES, 2009) (available at: http://www.arb.ca.gov/research/apr/past/06-325.pdf) ; and the second is "Lifecycle Analysis of High-Global Warming Potential Greenhouse Gas Destruction" ARB research contract 07-330 (ICF, 2011) (available at: http://www.arb.ca.gov/research/apr/past/07-330.pdf). These studies conclude that stationary refrigeration and AC systems are the source of significant GHG emissions, and that reduction measures are likely to be feasible and cost-effective (i.e., achievable at low costs or even cost savings). The scope of the two previous studies did not include specific reduction measures for energy use in refrigeration/AC systems. The scope of the two previous studies did not include specific reduction measures for energy use in refrigeration/AC systems, although it did include qualitative discussion of the means to reduce direct (refrigerant) emissions from such systems.

Several studies have been conducted on supermarket refrigerant use, energy use, and associated climate impacts. Useful background information on the issue was found in studies on German supermarkets (UBA, 2009), American supermarkets (Southern California Edison, 2008; and Baxter, 2002), and secondary (indirect) cooling loop systems (CEC PIER, 2004). Supermarket energy reduction measures have been assessed and recommended through the "Savings by Design" voluntary energy reduction program sponsored by several California electric utilities (Savings By Design, 2012).

Leak reduction measures have previously been investigated and summarized by the American Society of Heating, Refrigeration, and Air-conditioning Engineers (ASHRAE, 2011) the U.S. EPA (GreenChill, 2011), and RealZero, a collaboration between the Institute of Refrigeration (IOR) and the Carbon Trust, both based in Britain (RealZero, 2009).

2. Refrigerant Leak Reduction Measures

2.1 Proposed Leak Reduction Measures

Twelve leak reduction measures (LRMs) were proposed, with the rationale and cost implications of each one considered across three base case stores for new supermarket construction in California. These store types, as summarized below in Table 2-1, were defined by CEC consultant, VaCom Technologies, and based on data collected for the Savings By Design Program.[1] Due to the integrated nature of supermarket refrigeration systems and the proposed LRMs, the estimated leak reduction benefits associated with each individual proposed measure have not been estimated in this analysis; rather, estimated leak reduction benefits are aggregated across the full suite of measures. Conversely, cost estimates are disaggregated by measure and, as appropriate, by store size. The 12 LRMs, as well as the rationale and cost implications for each one, are summarized below.

Table 2-1: Summary of Store Types and Key Assumptions

Store Type	Size (Square Feet)	Average Amount of Refrigerant Charge in Conventional HFC Direct Expansion (DX) System (Pounds)
Big Box Stores	150,000	3,392
Large Supermarkets	60,000	2,812
Small Supermarkets	10,000	557

Measure #1: *Piping runs using threaded pipe must not be used for refrigeration lines (e.g., if steel piping is used, it must be welded). This does not include threaded connections at the compressor rack.*

- **Leak Reduction Rationale:** This measure will result in reduced leakage as, over time, threaded joints can seep refrigerant. By threading steel pipe, wall thickness is reduced, thereby reducing the effective working pressure of the piping. In contrast welded piping is more durable and less prone to leakage in the long-term. According to Chapter 45 of the 2008 ASHRAE Handbook ("Pipes, Tubes, and Fittings"), welded steel pipe joints provide maximum long-term reliability as they can "accommodate greater vibration and water hammer and higher temperatures and pressures than other joints." The ASHRAE Handbook also refers to the American Society of Mechanical Engineers (ASME) Standard B31.5 for limits on threading for various refrigerants and pipe sizes.

- **Cost Implications:** This measure limits the use of threaded pipe, requiring the use of welded or brazed pipe instead. Smaller diameter tubing is easier to thread, while larger

[1] The Savings By Design Program is part of a California statewide effort to encourage energy efficiency. As part of the program, California investor owned electric and gas utility companies offer customer incentive payments to assist in the design and construction of energy efficient new buildings. Since 2001, approximately 380 stores have been evaluated and received incentives under the program.

diameter tubing is easier to weld. In general, welded piping is often faster to install than threaded piping. Therefore, costs of welded or brazed pipe in lieu of threaded pipe will depend on the size of the pipe and the skill set of installers (i.e., installation may be slower for technicians less skilled in welding/brazing). Overall, costs associated with this measure are expected to be minimal. To estimate costs, it is assumed that a more skilled worker (at an incremental rate of $20 per hour) will be required to work an additional 8 hours to install the piping. Therefore, total incremental costs are estimated at $160 per store (regardless of store size).

Measure #2: *The use of copper tubing with an outside diameter (OD) smaller than ¼" is prohibited in all but systems with a refrigerant charge of 5 lbs. or less. When using ¼" tubing, it must be securely clamped to a rigid base so that the vibration level is below 8 mils.*

- **Leak Reduction Rationale:** Small copper tubing is prone to failure when subject to severe vibration, whereas steel tubing is more resilient.

- **Cost Implications:** The estimated cost of this measure is roughly $30 per system, based on the assumption that approximately 30 minutes of additional labor is needed per system. Actual costs will depend on store size and are mainly related to labor. Steel tubing costs less than copper but is generally more difficult to bend, braze, or flare.

Measure #3: *Flared tubing connections are prohibited from use on all refrigerant applications with the exception of pressure controls, valve pilot lines, and oil lines. In these exception cases, the tubing on a flare connection must be either (1) double-flared or (2) single-flared with a multi-ring seal coated with an industrial sealant suitable for use with refrigerants. All flared tubing connections with a multi-ring seal must be properly tightened to the manufacturer's recommendations.*

- **Leak Reduction Rationale:** This measure will result in reduced leakage as flared fittings are more leak-prone than brazed or threaded fittings. While most industry experts believe that flare fittings result in more leaks, some stakeholders have voiced concern over prohibiting flare fittings, maintaining that they are extremely reliable if done correctly. Even so, flared fittings have a history of loosening over time, especially if subjected to vibration (e.g., on compressor racks) or when covered with ice and subjected to a freeze/thaw (e.g., on expansion valves). In addition, flare fittings on expansion valves may be difficult to access for leak checking, which could result in leaks going undetected for long periods. Therefore, only in certain cases—namely, oil, pilot, and control lines, where it is impractical or impossible to solder/braze a connection—should flare fittings be permitted for use.

- **Cost Implications:** Since the use of flare fittings in the restricted applications is uncommon in new stores, any incremental costs associated with this measure are likely to be incurred in the exception cases, where either double-flare fittings or single-flare fittings with a multi-ring seal and industrial sealant must be used. Double-flare fittings are estimated to take longer to install (relative to single-flare fittings), which would result in incremental labor costs. Alternatively, end-users can purchase and install multi-ring seals, which, according to manufacturers, for a large OEM are estimated to add roughly $1 to the cost of each connection. Since most end-users will not purchase the seals directly from the supplier, it is conservatively estimated that each seal will incrementally

cost $3 per connection. As the incremental costs of multi-ring seals are assumed to be less than the incremental labor costs of using double-flares, cost implications of this measure are based on the use of multi-ring seals (in the exception cases). This analysis assumes that 100 flares are used per store, resulting in a total incremental cost of $300 per store (regardless of store size).

Measure #4: *Pressure relief valves installed on a refrigerant vessel containing a high-GWP refrigerant shall have a rupture disc installed between the outlet of the vessel and the inlet of the pressure relief valve. The space between the pressure relief valve inlet and rupture disc shall have a pressure gauge, pressure transducer, or other device to indicate a disc rupture and discharge of the relief valve.*

- **Leak Reduction Rationale:** This measure will result in reduced leakage by providing a means for service technicians to quickly identify a valve that has discharged so that it may be checked for possible refrigerant seepage. Specifically, pressure relief valves are single event devices. Thus, once a valve is discharged, contaminants in the system may become embedded in the seat of the valve, preventing the pressure relief valve from sealing properly. In addition, a seeping valve that is piped by code to the outside may go undetected for long periods.

- **Cost Implications:** Rupture disc relief valve with a gauge is estimated at about $140 per pressure relief valve. Assuming 1-2 pressure relief valves per rack and 2-4 racks per centralized DX system, costs are estimated at $630 per store (regardless of store size).

Measure #5: *Only Schrader access valves (i.e., access fittings with a valve core installed) with a brass or steel body are permitted for use. For systems with a refrigerant charge of 5 lbs. or more, valve caps shall be brass or steel (not plastic); a neoprene O-ring seal must be in place, if the cap is designed for it.*

- **Leak Reduction Rationale:** This measure will result in reduced leakage by prohibiting the use of valves that are more prone to leakage. Specifically, Schrader valves seal through a two-stage process. The primary seal is the spring loaded valve seat, which may seep over time, especially if contaminants become lodged in the seat. The secondary seal is the valve cap, which prevents the valve from becoming contaminated with contaminants. The cap is only effective if it is in place on the valve and not cracked, and if the O-ring cap seal is in place and not damaged. However, experience has shown that valve caps are commonly missing on Schrader valves as a result of damage or poor service practices. Brass and steel caps tend to be stronger than plastic caps and less apt to crack. Installed with the proper O-ring seal in place, the brass/steel cap is likely to reduce refrigerant loss from a seeping Schrader valve.

- **Cost Implications:** Incremental costs of brass or steel caps (versus plastic caps) are estimated to be up to $10 per valve. The number of valves will vary by store and are assumed to range between 50 and 200, based on store size. More specifically, total incremental costs are assumed to be $1,000 for small supermarkets, $1,500 for large supermarkets, and $2,000 for big box stores.

Measure #6: *Valves that are designed to have seal caps must be in place with chain tethers to fit over the stem. Valves with seal caps that are not removed from the valve during stem operation are exempted from using chain tethers.*

- **Leak Reduction Rationale:** This measure will result in reduced leakage by ensuring caps, which may be removed from the valve during operation, are installed with the proper O-ring seal in place. Caps are much less likely to be lost or misplaced if they have chained tethering.

- **Cost Implications:** Since valves are typically sold with seal caps, the incremental cost is associated with the tether, estimated at no more than $5 per valve. The number of valves will vary by store and are assumed to range between 50 and 200, based on store size. More specifically, total incremental costs are assumed to be $500 for small supermarkets, $750 for large supermarkets, and $1,000 for big box stores.

Measure #7: *Refrigerated service cases holding food products containing vinegar and salt shall have evaporator coils coated to prevent corrosion from these substances or be made of a corrosion-resistant material, such as stainless steel. The heat transfer efficiency of the coil coating should be considered when selecting the coating to ensure maximum energy efficiency.*

- **Leak Reduction Rationale:** his measure will reduce refrigerant leakage by protecting coils in deli cases, which can corrode over time and lead to significant leaks.

- **Cost Implications:** Costs are estimated to range between $300 and $700 per coil for coating, based on the size of the coil, the manufacturer supplying the service, and the type of coating used. The number of deli cases per store may range from 1-5. The incremental cost associated with this measure is estimated at $1,000 for small supermarkets and $2,000 for large supermarkets and big box stores, assuming $500 per coil and 2 to 4 deli cases per store. These costs for coating will likely decline if its application becomes more widespread across California.

Measure #8: *Refrigerant piping shall be installed in such a way so that it is accessible for leak detection and repairs.*

- **Leak Reduction Rationale:** This measure will reduce refrigerant leakage by prohibiting the installation of piping that is difficult to access. Piping that can't easily be leak checked or replaced is more susceptible to undetected and prolonged leaks.

- **Cost Implications:** Costs are expected to be negligible since this measure can be addressed as part of the design process. If costs are incurred, they will vary on a store by store basis.

Measure #9: *Refrigerant receivers with capacities greater than 200 lbs. shall be fitted with a device that indicates the level of refrigerant in the receiver.*

- **Leak Reduction Rationale:** This measure will reduce refrigerant leakage by allowing the monitoring of the receiver level, and in turn the detection of leaks that may not otherwise be easily detected. Although the information from a receiver level sensor can be difficult to interpret—with the level of refrigerant in the receiver dependent on system load, general system operation, weather conditions, and other external variables in

addition to refrigerant leakage—there is value in monitoring the maximum and minimum receiver levels over time to detect significant changes in refrigerant. This measure is believed to be complementary to ARB's refrigerant management program requirements.[2]

- **Cost Implications:** A variety of devises can be used to measure the receiver level, with certain types of sensors being most appropriate for specific types of receivers (e.g., horizontal versus vertical). Any receiver level sensor may be used, regardless of its sophistication (e.g., dial indicators or electronic indicators). The incremental cost associated with this measure is estimated at $150 per store, assuming an incremental cost of $50 per rack and three racks per store (regardless of store size).

Measure #10: *Pressure test system during installation prior to evacuation & charging: (1) Charge the system with regulated dry nitrogen and the appropriate tracer gas to bring system pressure up to 300 psig minimum; and (2) after the system has been checked for leaks and all leaks have been repaired and retested, the system must stand, unaltered, for 24 hours with no more than a +/- 1 pound pressure change from 300 psig, using the same gauge.*

- **Leak Reduction Rationale:** This measure will reduce refrigerant leakage by ensuring leak tightness at equipment installation. Holding the system at a high pressure for a long period of time will pick up even small leaks, thus ensuring leak tightness of equipment at installation.[3]

- **Cost Implications:** Costs are mainly associated with the isolation requirements, which could result in additional labor time (and potentially, a delay in the store opening). To estimate costs, it is assumed that an additional 8 hours of labor are needed at $60/hour. Therefore, total incremental costs are assumed to be $480 per store (regardless of store size).

Measure #11: *Evacuate system following pressure testing & prior to charging: (1) Pull a system vacuum down to at least 1000 microns (+/- 50 microns) and hold for 30 minutes; (2) Pull a second vacuum to a minimum of 500 microns and hold for 30 minutes; and (3) Pull a third vacuum to a minimum of 300 microns and hold for 24 hours with a maximum drift of 100 microns over the 24-hour period.*

- **Leak Reduction Rationale:** This measure will reduce refrigerant leakage by ensuring leak tightness at equipment installation. Pulling the vacuum three times will ensure that systems are free of impurities prior to charging.[4]

---

[2] Receiver level monitoring is not a requirement for systems under CARB's existing regulations that take effect January 1, 2011. The only exception to this is if the facility is implementing a parametric continuous monitoring system that uses receiver level in its model of system operation to alert the operator to leaks. This type of monitoring system is only required of large facilities (i.e., equipment containing >2,000 lbs).

[3] Measure #10 was adapted from the U.S. EPA GreenChill "Best Practices Guideline Ensuring Leak-Tight Installations of Refrigeration Equipment." The Guideline is intended to be a minimum for best practices. Some GreenChill partners have exceeded this Guideline by using a hydrogen mixture to pressurize the system and conduct a leak test with a hydrogen leak detector.

[4] As with Measure #10, this measure was adapted from the U.S. EPA GreenChill "Best Practices Guideline Ensuring Leak-Tight Installations of Refrigeration Equipment." The Guideline is intended to be a minimum for best practices. Some GreenChill partners have exceeded this Guideline by reducing the minimum evacuation pressure.

- **Cost Implications:** Costs are mainly associated with the evacuation and isolation requirements, which could result in additional labor time (and possibly, a delay in the store opening). To estimate costs, it is assumed that an additional 8 hours of labor are needed at $60/hour. Therefore, total incremental costs are assumed to be $480 per store (regardless of store size).

Measure #12: *Short radius elbows are prohibited from use on commercial refrigeration systems unless space limitations physically prohibit the use of long radius elbows. Only under these circumstances can short radius elbows be installed. [Note: definitions of "short" and "long" radius elbows are based on catalogued terminology.]*

- **Leak Reduction Rationale:** This measure will reduce refrigerant leakage by minimizing the use of short radius elbows, which are more susceptible to stress on refrigeration lines (especially where there is thermal expansion and vibration).

- **Cost Implications:** An incremental cost of $2 per elbow is assumed (for short versus long radius elbows). It is also assumed that each store uses up to 200 elbows, depending on the size of the store. More specifically, total incremental costs are assumed to be $200 for small supermarkets, $300 for large supermarkets, and $400 for big box stores.

2.2 Net Impact of Leak Reduction Measures

To determine the contribution to a reduced leak rate from the proposed LRMs in isolation is difficult, given that available refrigerant emission studies (e.g., Bivens and Gage [2004], UNEP [2010], IPCC [2005]), show programmatic leak reductions as an accumulation of all measures, whether they be in design, implementation, operating practice, leak repair practices, or refrigerant recovery during repair and at equipment end-of-life. However, a range of leak reduction effectiveness can be estimated within reasonable parameters.

The current annual refrigerant leak rate of supermarkets in California is estimated to be 18% to 20%, with an anticipated ARB Refrigerant Management Program post-regulation leak rate of 10% by the year 2020. Thus, we have used a 10% annual leak rate as the baseline "business-as-usual" to estimate additional reductions from adopting the LRMs. Beyond this level, the proposed LRMs are expected to reduce annual leak rates by a minimum of 1%, and a maximum of 3%, resulting in a potentially achievable annual leak rate of 7% by 2020.

Based on the experience of some supermarkets in the U.S. and Europe, 7% is assumed to represent the lowest reasonable leak rate that can be expected (Anderson, 2005; Giant Eagle, 2009). Anderson (2005) concluded that the average annual leak rate for commercial refrigeration equipment in the Netherlands is close to 6.9%. In the U.S., Giant Eagle received GreenChill's 2008 Best Partner Emissions Rate Award for achieving the lowest refrigerant leak rate of all GreenChill partners, with a corporate-wide refrigerant leak rate below 8% (Giant Eagle, 2009).

The actual impact of specific measures on leak reduction may in fact be greater than that estimated here. For example, refrigerant loss data indicate that leaks from flared joints account for approximately 50% of all refrigerant losses in a typical supermarket (IOR, 2010). However, given the already low leak rate (of 10%) assumed in the BAU, a reduction of only 1-3% is conservatively assumed in this analysis. Assuming an average leak reduction of 2% and an

assumed equipment lifetime of 15 years, the GHG emission savings per store are presented in the following Table 2-2.

Table 2-2. Summary of Annual and Lifetime GHG Savings Per Store

	Big Box	Large	Small
Annual Refrigerant Savings (pounds)	68	56	11
Annual Refrigerant Savings ($MTCO_2eq$)	123	100	20
Lifetime Refrigerant Savings (pounds)	1,020	840	165
Lifetime Refrigerant Savings ($MTCO_2eq$)	1,839	1,501	297

Total annual GHG reductions for the state of California from 2014-2030 are presented in Table 2-3 and graphically displayed in Figure 2-1. The reductions are estimated based on the assumption that in 2010 there were 400 big box stores, 3,600 large supermarkets, and 500 small supermarkets in California (ARB, 2009), and that the supermarket industry is growing at a conservative rate of roughly 1% per year. Since the measures only apply to new construction and remodels, the total annual GHG reduction benefits of implementing these measures gradually increase over time, as existing stores are remodeled and subject to the leak reduction measures. By 2028, it is assumed that all existing stores have undergone major remodels, resulting in statewide emissions reductions of more than 440,000 $MTCO_2eq$ by 2030.

Table 2-3: Summary of Total Annual GHG Reductions for California ($MTCO_2eq$)

Year	Big Box	Large	Small	Total
2014	3,908	28,702	790	**33,400**
2015	7,316	53,730	1,478	**62,524**
2016	10,724	78,758	2,167	**91,648**
2017	14,132	103,786	2,856	**120,773**
2018	17,539	128,815	3,544	**149,898**
2019	20,947	153,844	4,233	**179,024**
2020	24,355	178,873	4,921	**208,150**
2021	27,764	203,903	5,610	**237,277**
2022	31,172	228,934	6,299	**266,404**
2023	34,580	253,964	6,987	**295,532**
2024	37,988	278,995	7,676	**324,660**
2025	41,396	304,027	8,365	**353,788**
2026	44,805	329,059	9,054	**382,917**
2027	48,213	354,091	9,742	**412,047**
2028	51,622	379,124	10,431	**441,177**
2029	51,627	379,167	10,432	**441,226**
2030	51,633	379,210	10,433	**441,276**

As shown in the following Figure 2-1, the majority of emissions reductions (~86%) result from implementation of the leak reduction measures in large supermarkets. Due to their smaller makeup of the industry, approximately 12% of the reductions come from big box stores, while only about 2% of the reductions come from small supermarkets.

Figure 2-1. Total Annual GHG Reductions for California 2014-2030

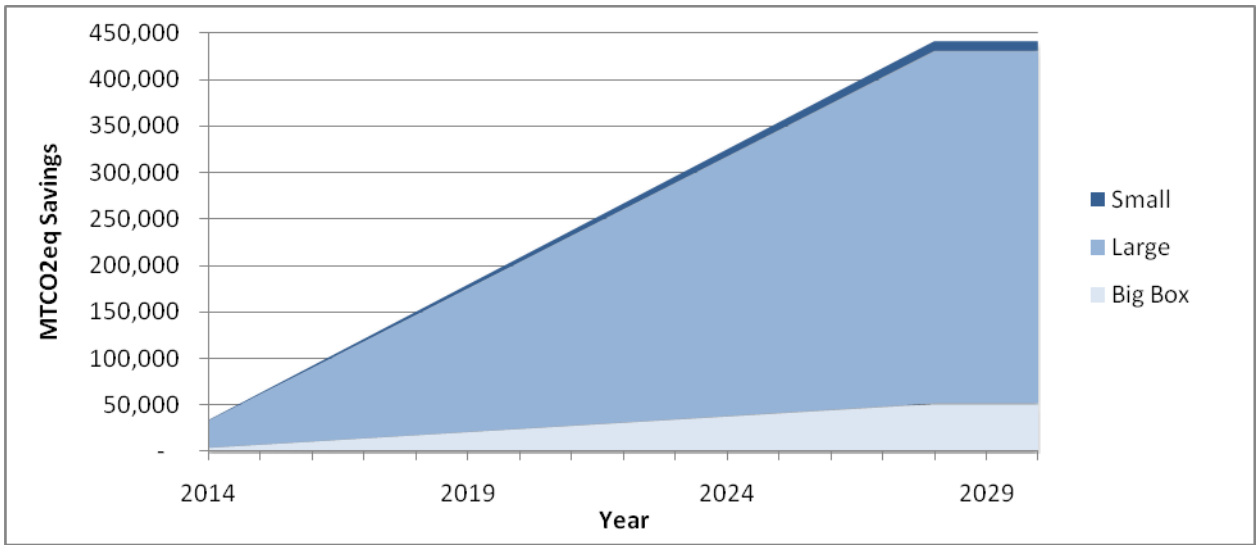

2.3 Cost-Effectiveness Analysis

The assumptions and calculations used to estimate cost implications for each leak reduction measure are summarized below in Table 2-4. The total one-time cost estimates for small supermarkets, large supermarkets, and big box stores are also provided; these costs are assumed to be incurred at the initial design and installation of the refrigeration equipment, which is assumed to have a lifetime of 15 years.

Table 2-4 is shown in full on the following page to preserve table integrity.

Table 2-4. Leak Reduction Measure Cost Assumptions and Calculations

LRM #	Implications	Assumptions	Estimated Costs by Store Type		
			Big Box	Large	Small
1	Skilled labor required	Hours = 8 Incremental Labor Rate = $20/hr	$160	$160	$160
2	Additional labor required	Hours = 0.5 Labor Rate = $60/hr	$30	$30	$30
3	Use of single-flare fittings with a seal	Flares = 100/store Incremental costs = $3/seal	$300	$300	$300
4	Purchase of pressure relief valves	$140 /pressure relief valve 1-2 pressure relief valves/rack 3 racks/store	$630	$630	$630
5	Use of brass over plastic	Incremental cost = $10/valve Valves/store = 200 (big box), 150 (large), 100 (small)	$2,000	$1,500	$1,000
6	Use of a tether	Incremental cost = $5/valve Valves/store = 200 (big box), 150 (large), 100 (small)	$1,000	$750	$500
7	Use of coated coils	$500/coil Coils/store = 4 (big box/large), 2 (small)	$2,000	$2,000	$1,000
8	Store design	Negligible	-	-	-
9	Use of receiver level sensors	$50/rack 3 racks/store	$150	$150	$150
10	Additional labor required	Hours = 8 Labor Rate = $60/hr	$480	$480	$480
11	Additional labor required	Hours = 8 Labor Rate = $60/hr	$480	$480	$480
12	Use of long radius elbows over short radius elbows	Incremental Cost = 2$/elbow Elbows/store = 200 (big box), 150 (large), 100 (small)	$400	$300	$200
TOTAL			**$7,630**	**$6,780**	**$4,930**

Based on the above one-time costs and lifetime GHG emission savings, cost-effectiveness of the LRMs was calculated in terms of cost per metric ton of carbon dioxide equivalent ($MTCO_2eq$) reduced using the following formula:

$$\$/MTCO_2eq = \frac{\text{[Total Cost of LRMs – (Refrigerant Savings + Avoided Leak Repair Costs)]}}{MTCO_2eq \text{ reductions as a result of LRMs}}$$

The results by store type are summarized below in Table 2-5. The results are calculated using a discount rate of 3% and assuming a 15-year equipment lifetime. As shown, there is a cost savings of almost $40/MTCO2eq associated with implementing the leak reduction measures in all supermarkets, benefit/cost ratios greater than 3, and payback periods of 1-3 years.

Table 2-5. Summary of Costs and Benefits per Store

	Big Box	Large	Small
Initial Cost of LRMs	$7,630	$6,780	$4,930
Annualized Costs of LRMs	$509	$452	$329
Annual Refrigerant Reductions (pounds)	68	56	11
Lifetime Refrigerant Reductions ($MTCO_2eq$)	1,839	1,501	297
Annualized Refrigerant Savings from Reduced Leakage (not including the cost savings of environmental externalities) [1]	$678	$562	$111
Lifetime Refrigerant Savings from Reduced Leakage (not including the cost savings of environmental externalities) [1]	$8,099	$6,715	$1,330
Annualized Refrigerant Savings from Reduced Leakage (including the cost savings of environmental externalities) [1,2]	$5,922	$4,841	$959
Lifetime Refrigerant Savings from Reduced Leakage (including the cost savings of environmental externalities [1,2]	$70,694	$57,795	$11,449
Annualized Avoided Leak Repair Costs [3]	$640	$640	$640
Lifetime Avoided Leak Repair Costs	$7,640	$7,640	$7,640
Net Annualized Cost Savings [2]	$6,053	$5,029	$1,270
Net Lifetime Cost Savings ($ Saved/Store) [2]	$70,704	$58,655	$14,159
Cost-Effectiveness ($ Saved/$MTCO_2eq$ Reduced) [2]	$38.44	$39.08	$47.62
Benefit/Cost Ratio	10.27	9.65	3.87
Simple Payback (years)	1	1	3

Table Notes:

1. Assumes a refrigerant cost of $10/pound.

2. Accounts for costs savings associated with CO2 emission reductions. Carbon costs associated with refrigerant emissions were incorporated into the cost analysis using CEC price forecasts for annual carbon costs ($/ton) in 2014 ($19.87) through 2029 ($79.00), based on an assumed 15-year lifetime of equipment. Environmental externalities (i.e., carbon costs) associated with energy consumption were incorporated into the cost analysis per the methodology described in CEC's Life-Cycle Cost Methodology (2011), available at: www.energy.ca.gov/title24/2013standards/prerulemaking/documents/general _cec_documents/2011-01-14_LCC_Methodology_2013.pdf.

3. Based on avoided cost of leak repair labor of 16.5 hours at $60/hour for skilled labor, and 8 hours at $20/hour for unskilled labor; and avoided cost of additional components and equipment necessary for leak repair.

3. Energy Conservation Measures

3.1 Energy Conservation Measures Background and Overview

Initial research investigated potential energy conservation measures (ECMs) for large commercial air-conditioning and refrigeration systems. By consensus between researchers, ARB, and the CEC, existing Title 24 energy conservation standards for commercial heating, ventilation, and air-conditioning (HVAC) were deemed sufficient at the time of investigation. Commercial refrigeration systems that are large and use significant amounts of electricity were then investigated. The two most common business types which had the largest overall carbon footprint from a combination of refrigerant leaks and energy use were refrigerated cold storage warehouses and supermarkets. Cold storage warehouses were already the subject of Title 24 energy conservation standards, which left supermarkets as the business type where the greatest energy conservation benefits could be accomplished.

After preliminary research was conducted by ICF International, the California Energy Commission (CEC) chose to assist and expedite research on supermarket systems through Title 24 code enhancement. The CEC employed the assistance of contractors VaCom Technologies, Heschong Mahone Group, and McHugh Energy. ICF International remained as the lead on leak reduction measures, and compared the older DOE 2.2R energy model with the newer EnergyPlus energy model to assess the degree of agreement between the two models. Therefore, the ECMs proposed and analyzed are largely the result of the contractors employed by the CEC; they are included in this report because they are a key component of the research, and ICF International assessed their associated costs and benefits.

The primary source of information on energy efficiency measures for supermarkets were derived from work developed in the past ten years by the Savings by Design (SBD) program. SBD is California's nonresidential new construction energy efficiency program, administered statewide and funded by Utility customers through the Public Purpose Programs surcharge applied to gas and electric services. Participating utilities include:

- Pacific Gas & Electric Company (PG&E)
- San Diego Gas & Electric Company (SDG&E)
- Southern California Edison Company (SCE)
- Southern California Gas Company (SoCalGas)
- Sacramento Municipal Utility District (SMUD)

Using a whole building or systems approach, building designers use computer simulation to estimate energy usage. For the retail food sector, various equipment designs can be tested to achieve energy reductions.

3.2 Energy Conservation Measures Evaluated

Nine ECMs were evaluated in the analysis:

- **Floating head pressure**: require controls to float refrigeration system saturated condensing temperature (SCT) to 70°F during low ambient temperature conditions, with ambient-following control logic and variable speed condenser fans.

- **Condenser specific efficiency**: require a maximum fan power per unit of capacity on air-cooled and evaporative-cooled refrigerant condensers.
- **Floating suction pressure**: require controls to reset refrigeration system target suction temperature based on refrigerated display case or walk-in temperature, rather than operating at a fixed suction temperature setpoint.
- **Mechanical subcooling**: require liquid refrigerant to be subcooled to 50°F or less for low-temperature loads.
- **Display case lighting control**: require automatic controls to turn off display case lights during non-business hours.
- **Liquid-suction heat exchangers**: require the use of a liquid suction heat exchanger, which sub-cools the liquid refrigerant entering a refrigeration circuit load (either a walk-in evaporator coil or display case lineup) using the relatively cold suction gas exiting the case or walk-in, increasing the capacity of the liquid refrigerant to perform useful refrigeration.
- **Refrigeration heat recovery**: require equipment and controls to utilize rejected heat from refrigeration system(s) for space heating, with a limited increase in refrigerant charge.
- **CO_2 secondary or cascade cooling**: require that refrigerated display cases and walk-in coolers and freezers utilize carbon dioxide (CO_2) for cooling to reduce HFC refrigerant charge.
- **Walk-in evaporator fan speed control**: mandatory control of fan-powered direct expansion (DX) evaporators or secondary cooling coils in walk-in freezers and coolers, utilizing variable speed fan control as the primary means of space temperature control.

A thorough analysis of the energy conservation measures were conducted, using 15 different supermarket configurations of size, compressor type, and condenser system, as shown in the following Table 3-1.

Table 3-1. Supermarket Size and system description for analysis prototypes

Supermarket Prototype	Condenser Type	Compressor System	Designation
Small Supermarket	Air-cooled	Central	SAC
		Distributed	SAD
	Evaporative cooled	Central	SEC
	Water-cooled condenser with water-cooled fluid cooler	Central	SFC
		Distributed	SFD
Medium Supermarket (also referred to as “large” in some energy models)	Air-cooled	Central	MAC
		Distributed	MAD
	Evaporative cooled	Central	MEC
	Water-cooled condenser with water-cooled fluid cooler	Central	MFC
		Distributed	MFD

Supermarket Prototype	Condenser Type	Compressor System	Designation
Large Big Box Store	Air-cooled	Central	LAC
		Distributed	LAD
	Evaporative cooled	Central	LEC
	Water-cooled condenser with water-cooled fluid cooler	Central	LFC
		Distributed	LFD

The 15 configurations above were further assessed for 10 of the state's climate zones (CTZs):

- CTZ01 – Arcata
- CTZ03 – Oakland
- CTZ05 – Santa Maria
- CTZ07 – San Diego (Lindbergh Field)
- CTZ08 – Fullerton
- CTZ10 – Riverside
- CTZ12 – Sacramento (Sacramento Executive Airport)
- CTZ13 – Fresno
- CTZ14 – Palmdale
- CTZ15 – Palm Springs

Climate zones were selected to cover a sufficient diversity of California climates to represent the sensitivity of supermarket refrigeration measures to climatic differences.

Full results of the analysis of the energy conservation measures are shown in detail in Appendix A of this report.

A summary of the energy reductions, GHG reductions, and cost of the measures follow.

Table 3-2 provides a summary of the energy and GHG reductions while Table 3-3 provides a summary of the costs and savings of the energy reduction measures

Table 3-2. Energy Conservation Measures, Annual Energy and GHG Reductions, Per Store

Supermarket Type, average store	Electricity reductions, annual (kWh)	Natural gas reductions, annual (therms)	GHG Annual Reductions ($MTCO_2E$)	Cost of GHG Reduction ($/$MTCO_2E$)
Small	78,618	7,573	51	$ (295)
Medium	272,255	26,572	178	$ (313)
Large (Big Box)	322,054	35,118	218	$ (338)

Table 3-3. Energy Conservation Measures, Cost and Savings

Supermarket Type, average store [1]	Initial added Cost of ECMs (per store)	Annual Savings (per store)	Net Annual Savings (per store) [2]	Total Annual Statewide Savings (all stores) [3]
Small	$ 51,069	$ 17,975	$ 14,570	$ 9 million
Medium	$136,638	$ 62,935	$ 53,826	$ 232 million
Large (Big Box)	$167,961	$ 79,754	$ 68,556	$ 33 million
Total Annual Savings				$ 274 million

Table Notes:

1. All cost and savings shown are for an average store with the size types of small, medium, and large; except the last row, which shows the total annual statewide savings (far right column), cumulatively for all supermarkets in California greater than 8,000 square feet.

2. Net annual savings are the cost savings from reduced electricity and natural gas usage, less the annualized initial cost of implementing the ECMs. The initial cost is annualized over the 15-year lifetime of the equipment.

3. Total annual savings (current dollars) are shown for full implementation of program, which would begin 2014, and reach 100 percent saturation by 2029 when all existing equipment would be replaced (assume 15-year equipment lifetime); and based on current number of stores (500 small, 3600 medium, and 400 large; that increase in number by 1% annually through 2029).

Indirect GHG reductions occur from the reduced electricity usage and natural gas usage. The measures would only apply to new stores or new systems built or installed beginning in 2014. Supermarket refrigeration equipment is assumed to have a useful life of 15 years, thus, if new energy conservation measures were employed beginning 2014, they would gradually reach 100% saturation in the year 2029. Each year of implementation would increase the GHG reductions above BAU by another 0.054 $MMTCO_2E$. By 2029, annual reductions would be 0.72 $MMTCO_2E$.

The following Figure 3-1 shows annual GHG reductions from the energy conservation measures. (Shown on following page to preserve figure readability in larger format.)

Figure 3-1. Supermarket Energy Conservation Measures, Annual GHG Reductions

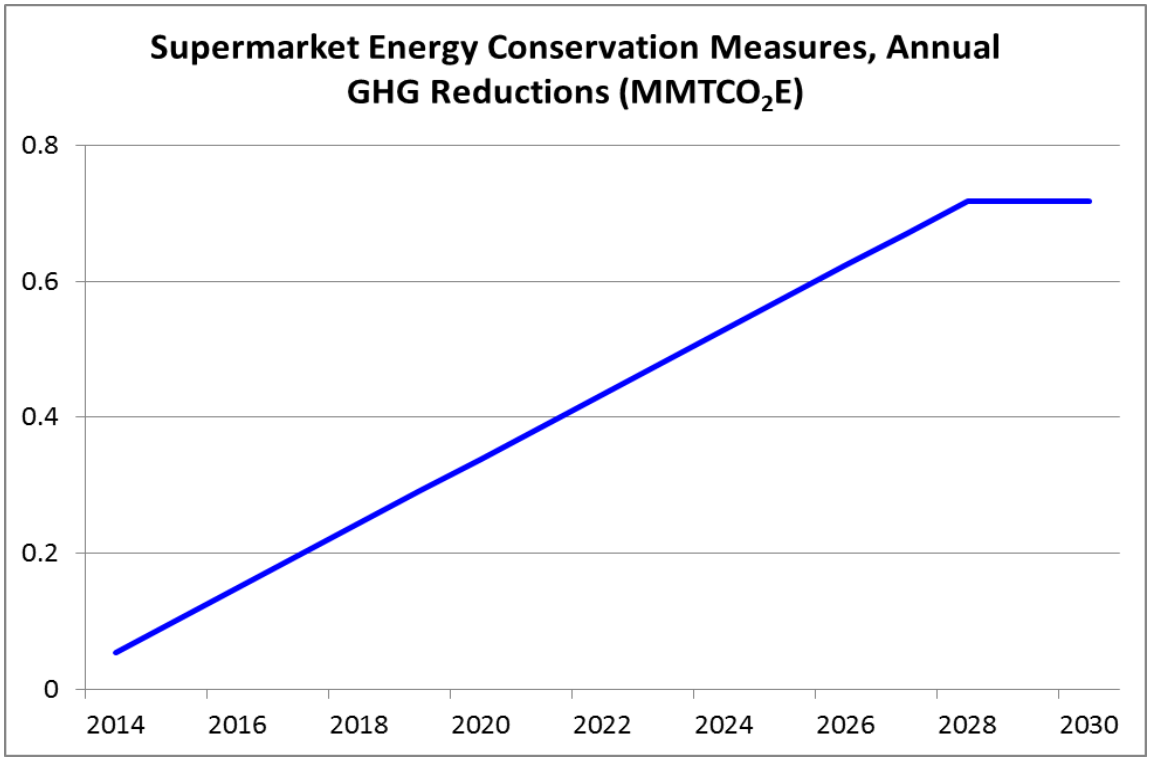

This page intentionally left blank.

4. Comparison of Energy Efficiency Results Generated by EnergyPlus and DOE-2.2R

4.1 Introduction to Energy Model Comparison

In support of the development of the 2014 Title 24 Building Energy Efficiency Standards, ICF International supported an evaluation of energy conservation measures for supermarket refrigeration systems to better understand their impact on energy consumption (ARB contract 09-306). To evaluate the measures, ICF International used EnergyPlus version 5—the Department of Energy's (DOE's) new-generation building energy simulation program—while the California Energy Commission's (CEC's) consultant, VaCom Technologies, used DOE-2.2R—an extension of the DOE's discontinued DOE-2 building energy simulation program.

EnergyPlus is a whole building energy simulation program that engineers, architects, and researchers use to model energy and water use in buildings. Modeling the performance of a building with EnergyPlus enables building professionals to optimize the building design to use less energy and water. EnergyPlus is expected to replace commonly used whole building energy modeling software supported by DOE, known as DOE 2.2R. The EnergyPlus program has continued funding from DOE and is going through validation cycles. While the DOE-2.2R model is being used to develop the mandatory measures for the 2014 Title 24 standards, a comparison of these two models is important to begin assessing the feasibility of using EnergyPlus for developing future performance based measures. The energy conservation measures that were evaluated include:

- **Floating head pressure**: require controls to float refrigeration system saturated condensing temperature (SCT) to 70°F during low ambient temperature conditions, with ambient-following control logic and variable speed condenser fans.
- **Condenser specific efficiency**: require a maximum fan power per unit of capacity on air-cooled and evaporative-cooled refrigerant condensers.
- **Floating suction pressure**: require controls to reset refrigeration system target suction temperature based on refrigerated display case or walk-in temperature, rather than operating at a fixed suction temperature setpoint.
- **Mechanical subcooling**: require liquid refrigerant to be subcooled to 50°F or less for low-temperature loads.
- **Display case lighting control**: require automatic controls to turn off display case lights during non-business hours.
- **Liquid-suction heat exchangers**: require the use of a liquid suction heat exchanger, which sub-cools the liquid refrigerant entering a refrigeration circuit load (either a walk-in evaporator coil or display case lineup) using the relatively cold suction gas exiting the case or walk-in, increasing the capacity of the liquid refrigerant to perform useful refrigeration.
- **Refrigeration heat recovery**: require equipment and controls to utilize rejected heat from refrigeration system(s) for space heating, with a limited increase in refrigerant charge.
- **CO_2 secondary or cascade cooling**: require that refrigerated display cases and walk-in coolers and freezers utilize carbon dioxide (CO_2) for cooling to reduce HFC refrigerant charge.

- **Walk-in evaporator fan speed control**: mandatory control of fan-powered direct expansion (DX) evaporators or secondary cooling coils in walk-in freezers and coolers, utilizing variable speed fan control as the primary means of space temperature control.

Further explanation of these measures, as well as the results from DOE-2.2R, are provided in the Supermarket Refrigeration Codes and Standards Enhancement (CASE) section of this report. The purpose of this section is to compare the results generated by DOE-2.2R and EnergyPlus and briefly discuss possible sources of discrepancies.

4.2 Analysis Overview

Measures under consideration for the 2014 code change cycle were evaluated by VaCom Technologies using DOE-2.2R energy simulation software. In order to compare DOE-2.2R with EnergyPlus, ICF International generated results in EnergyPlus for all medium supermarket prototypes (i.e., stores with an area of 60,000 square feet). Note that the term “large” supermarket is applied to these medium-sized supermarkets in the energy simulation software.

The small and big box store prototypes were not evaluated in EnergyPlus as it was determined that results for the medium-sized prototype stores would be sufficient in understanding the key differences between the energy simulation software. Table 4-1 below provides a description for each of the prototype stores analyzed. The acronyms in the right column are used to clearly designate the store size, condenser type, and compressor system of each prototype store.

Table 4-1: Description of Prototype Stores

Supermarket Store Size	Condenser Type	Compressor System	Acronym/Designation
Medium-sized Supermarket (also referred to as “large” by energy models)	Air-cooled	Central	MAC
		Distributed	MAD
	Evaporative cooled	Central	MEC
	Water-cooled condenser with water-cooled fluid cooler	Central	MFC
		Distributed	MFD

Each modeled supermarket store prototype was evaluated in 10 different climate zones, which are summarized in Table 4-2. Climate zones were selected to cover a sufficient diversity of California climates to represent the sensitivity of supermarket refrigeration energy conservation measures (ECMs) to climatic differences.

Table 4-2. Climate Zones Modeled

Climate Zone	Name
CTZ01	Arcata
CTZ03	Oakland
CTZ05	Santa Maria
CTZ07	San Diego (Lindbergh)

Climate Zone	Name
CTZ08	Fullerton
CTZ10	Riverside
CTZ12	Sacramento (Sacramento Executive Airport)
CTZ13	Fresno
CTZ14	Palmdale
CTZ15	Palm Springs

The DOE-2.2 and EnergyPlus results presented in the following sections summarize the following three results:

1. The baseline results for each medium-sized supermarket prototype store,
2. The average results by ECM across all climate zones for each medium-sized supermarket prototype store, and
3. The average results by ECM across all medium-sized supermarket prototype stores for each climate zone.

4.3 Summary of Baseline Comparison

Baseline energy consumption results from each model for each of the modeled store prototypes (i.e., MAC, MAD, MEC, MFD, and MFC) are presented below. The results are disaggregated into six source categories: heating, cooling, lighting, equipment, fans, and refrigeration. The specific sources of energy consumption represented by these categories differ slightly in the two models. The sources of energy consumption and output categories for each model is summarized and provided below in Table 4-3.

Table 4-3. Source of Energy Consumption and Output Categories of DOE 2.2R and Energy Plus

Source of Energy Consumption	DOE-2.2R Output Categories	EnergyPlus Output Categories
Heating	Space Heating	Heating
Cooling	Space Cooling	Cooling
Lighting	Lights	Interior Lighting Exterior Lighting
Equipment	Pumps Aux Miscellaneous Equipment	Interior Equipment Exterior Equipment
Fans	Vent Fans	Fans
Refrigeration	Heat Reject Refrigerated Display	Refrigeration

Overall, the baseline energy consumption generated by the EnergyPlus model is between 3% and 11% greater than that generated by DOE-2.2R for modeled prototype stores.

Table 4-4. Baseline energy consumption results for MAC store prototype by energy source

Source of Energy Consumption	DOE-2.2R		EnergyPlus	
	Electricity Consumption (kWh)	Natural Gas Consumption (Therms)	Electricity Consumption (kWh)	Natural Gas Consumption (Therms)
Heating	-	31,133	-	49,616
Cooling	38,076	-	27,024	-
Lighting	708,645	-	785,471	-
Equipment	168,561	140	253,275	1,889
Fans	210,257	-	232,277	-
Refrigeration	1,190,360		1,259,822	
TOTAL	**2,315,899**	**31,273**	**2,557,870**	**51,505**

Figure 4-1: Electricity savings results for MAC store prototype

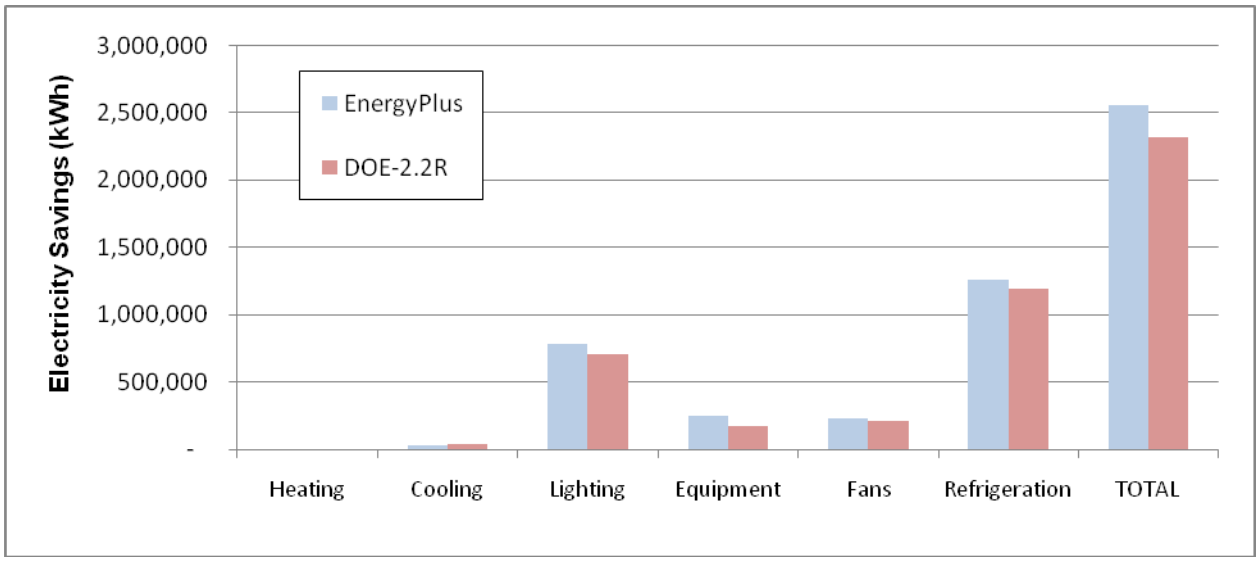

Table 4-5: Baseline energy consumption results for MAD store prototype by energy source

Source of Energy Consumption	DOE-2.2R		EnergyPlus	
	Electricity Consumption (kWh)	Natural Gas Consumption (Therms)	Electricity Consumption (kWh)	Natural Gas Consumption (Therms)
Heating	-	31,132	-	36,160
Cooling	38,076	-	47,980	-
Lighting	708,645	-	785,471	-
Equipment	168,561	140	253,275	1,889
Fans	210,257	-	231,314	-
Refrigeration	1,161,411		1,188,066	
TOTAL	**2,286,950**	**31,272**	**2,506,107**	**38,048**

Figure 4-2. Electricity savings results for MAD store prototype

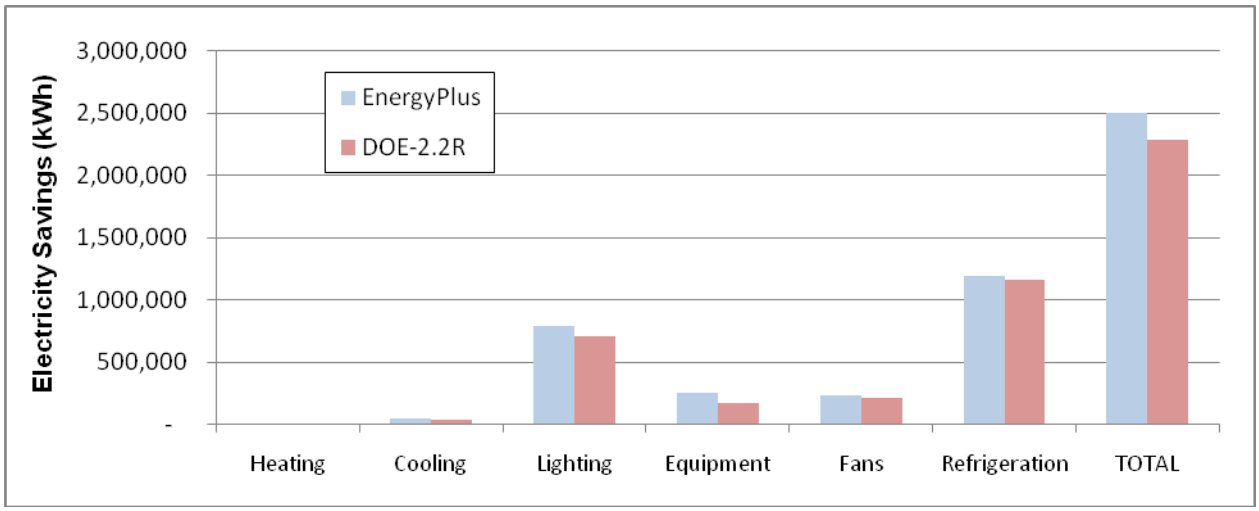

Table 4-6: Baseline energy consumption results for MEC store prototype by energy source

Source of Energy Consumption	DOE-2.2R		EnergyPlus	
	Electricity Consumption (kWh)	Natural Gas Consumption (Therms)	Electricity Consumption (kWh)	Natural Gas Consumption (Therms)
Heating	-	31,131	-	49,616
Cooling	38,081	-	27,024	-
Lighting	708,645	-	785,471	-
Equipment	168,561	140	253,275	1,889
Fans	210,257	-	232,277	-
Refrigeration	1,084,323		1,162,373	-
TOTAL	**2,209,867**	**31,271**	**2,460,421**	**51,505**

Figure 4-3. Electricity savings results for MEC store prototype

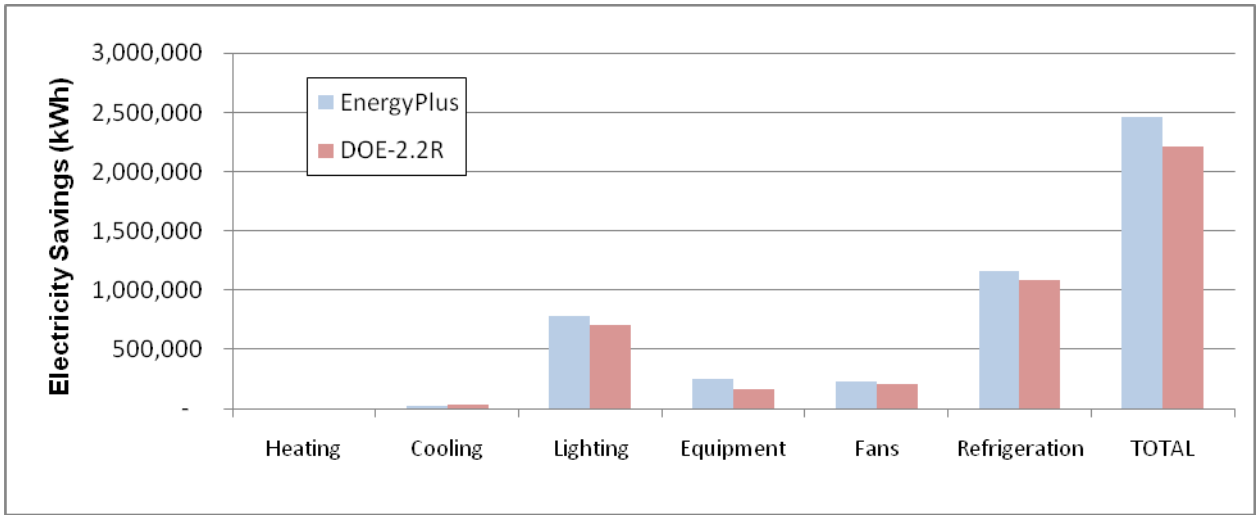

Table 4-7: Baseline energy consumption results for MFD store prototype by energy source

Source of Energy Consumption	DOE-2.2R		EnergyPlus	
	Electricity Consumption (kWh)	Natural Gas Consumption (Therms)	Electricity Consumption (kWh)	Natural Gas Consumption (Therms)
Heating	-	31,146	-	36,160
Cooling	38,083	-	47,980	-
Lighting	708,645	-	785,471	-
Equipment	168,561	140	253,275	1,889
Fans	210,257	-	231,314	-
Refrigeration	1,214,042		1,081,613	-
TOTAL	**2,339,588**	**31,286**	**2,399,654**	**38,048**

Figure 4-4. Electricity savings results for MFD store prototype

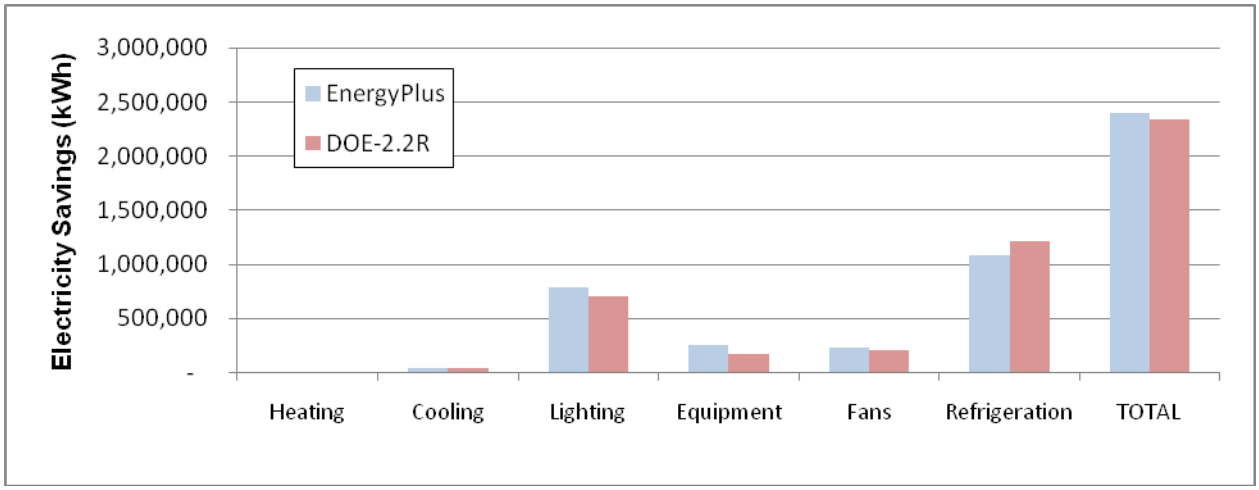

Table 4-8. Baseline energy consumption results for MFC store prototype by energy source

Source of Energy Consumption	DOE-2.2R		EnergyPlus	
	Electricity Consumption (kWh)	Natural Gas Consumption (Therms)	Electricity Consumption (kWh)	Natural Gas Consumption (Therms)
Heating	-	31,146	-	49,616
Cooling	38,082	-	27,024	-
Lighting	708,645	-	785,471	-
Equipment	168,561	140	253,275	1,889
Fans	210,257	-	232,277	-
Refrigeration	1,245,327		1,157,416	-
TOTAL	**2,370,872**	**31,286**	**2,455,464**	**51,505**

Figure 4-5. Electricity savings results for MFC store prototype

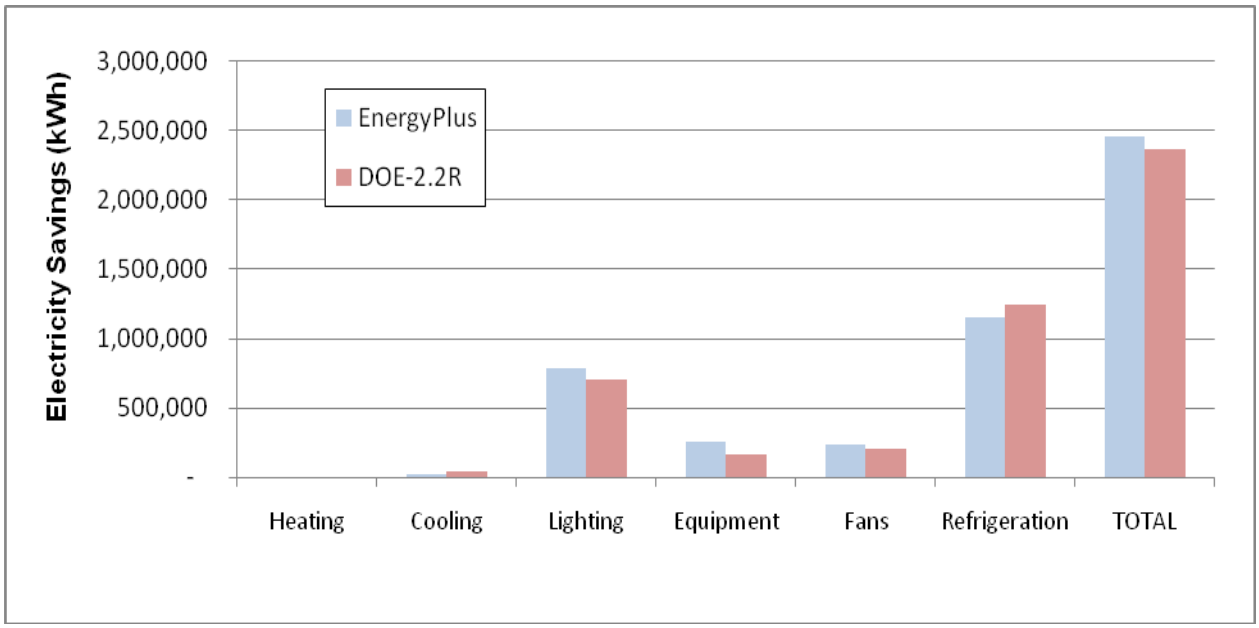

4.4 Summary of Results by Measure

Energy simulation results for the following measures are presented in this section:

1. Floating head pressure
2. Condenser specific efficiency
3. Floating suction pressure
4. Mechanical subcooling
5. Display case lighting control
6. Liquid-suction heat exchangers
7. Refrigeration heat recovery
8. Secondary (indirect) cooling
9. Walk-in variable speed fan control

Floating Head Pressure.

Table 4-9 presents the simulation results for the floating head pressure measure for the modeled supermarket prototypes from DOE-2.2 and EnergyPlus. Figures 4-6 and 4-7 present this information graphically.

Table 4-9. Analysis results for floating head pressure

Store Prototype/ Climate Zone	DOE-2.2R			EnergyPlus		
	Electricity Savings (kWh)	Natural Gas Savings (Therms)	TDV Cost Savings ($)	Electricity Savings (kWh)	Natural Gas Savings (Therms)	TDV Cost Savings ($)
MAC Average	143,258	0	$247,994	80,893	22	$143,263
MAD Average	155,516	0	$269,457	91,127	17	$161,626
MEC Average	51,786	0	$101,230	36,253	21	$71,008
MFC Average	55,615	0	$91,112	23,471	21	$38,761
MFD Average	64,795	0	$104,415	59,679	17	$96,704
MXX Average	94,194	0	$162,842	58,285	20	$102,272
Arcata	104,908	0	$190,300	80,838	29	$147,225
Oakland	94,637	0	$171,734	75,703	28	$137,000
Santa Maria	83,142	0	$156,001	76,635	30	$141,065
San Diego-Lindbergh	83,142	0	$156,001	76,635	30	$141,065
Fullerton	92,178	0	$162,405	68,793	28	$119,990
Riverside	94,048	0	$153,973	52,272	16	$85,896
Sacramento	97,751	0	$163,147	59,406	20	$99,410
Fresno	94,144	0	$155,616	53,430	18	$88,557
Palmdale	104,001	0	$168,887	17,512	(2)	$28,884
Palm Springs	79,369	0	$127,896	23,425	4	$38,279

Figure 4-6. Electricity savings results for floating head pressure by store type

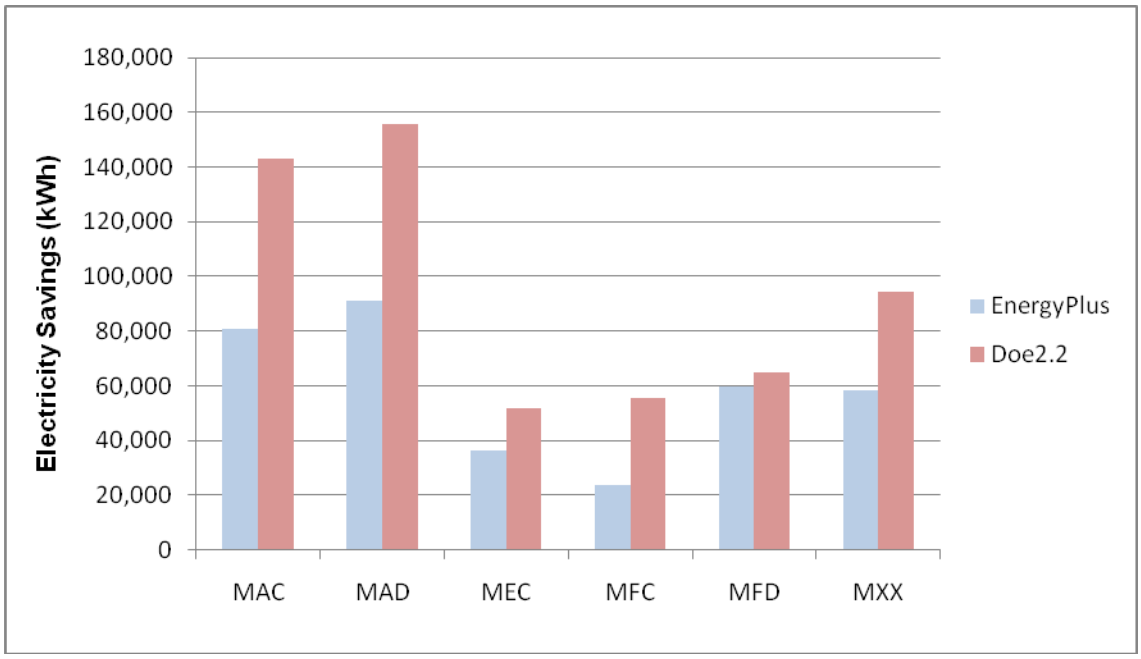

Figure 4-7. Electricity savings results for floating head pressure by climate zone

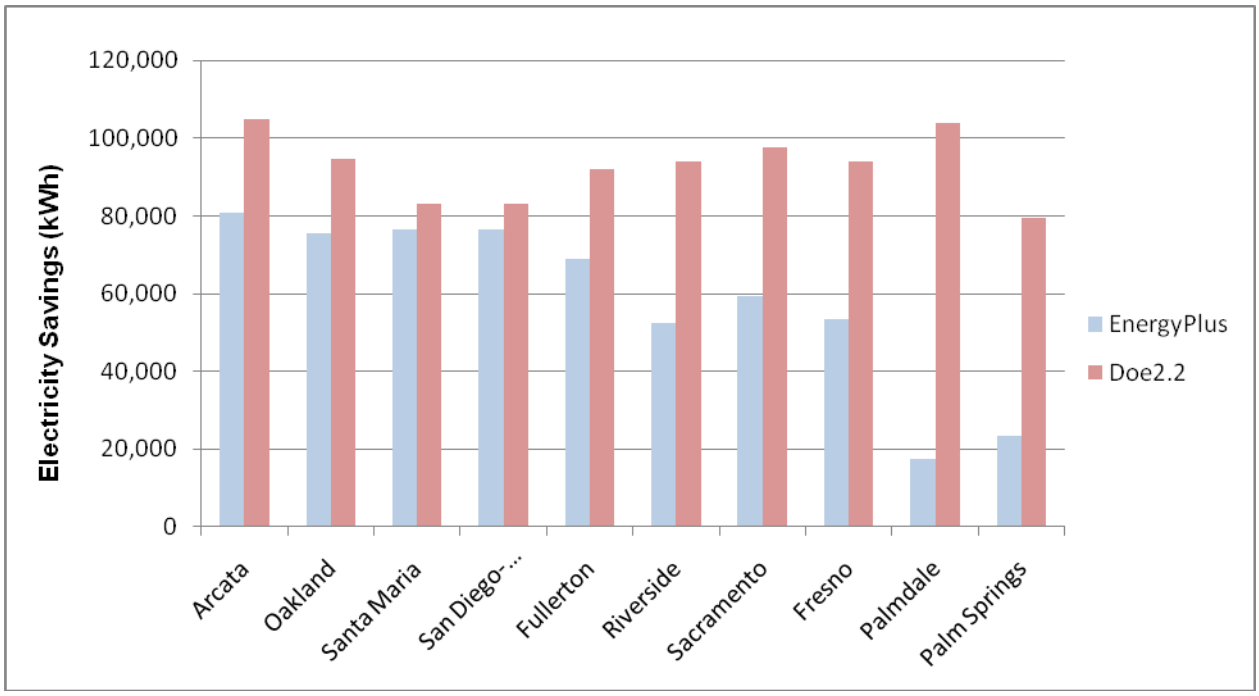

Condenser Specific Efficiency

Table 4-10 presents the simulation results for the condenser specific efficiency measure for the modeled supermarket prototypes from DOE- 2.2R and EnergyPlus. Figures 4-8 and 4-9 present this information graphically.

Table 4-10. Analysis results for condenser specific efficiency

Store Prototype/ Climate Zone	DOE-2.2R		EnergyPlus	
	Electricity Savings (kWh)	TDV Cost Savings ($)	Electricity Savings (kWh)	TDV Cost Savings ($)
MAC Average	7,867	$22,022.26	22,604	$64,032.05
MAD Average	7,122	$21,020.15	23,289	$70,317.36
MEC Average	3,040	$5,936.09	15,917	$31,141.42
MXX Average	6,010	$16,326.16	20,604	$55,163.61
Arcata	2,444	$5,366.51	8,925	$20,349.74
Oakland	3,371	$8,252.97	10,377	$26,514.04
Santa Maria	3,157	$7,036.68	24,981	$56,304.34
San Diego-Lindbergh	4,456	$9,866.78	19,628	$43,145.71
Fullerton	4,702	$13,613.54	20,718	$59,604.78
Riverside	6,658	$20,795.58	22,730	$67,937.49
Sacramento	5,746	$19,036.41	25,971	$83,501.44
Fresno	7,816	$22,940.41	23,261	$65,168.00
Palmdale	7,526	$22,536.95	29,528	$83,546.45
Palm Springs	14,219	$33,815.81	19,916	$45,564.09

Figure 4-8. Electricity savings results for condenser specific efficiency by store type

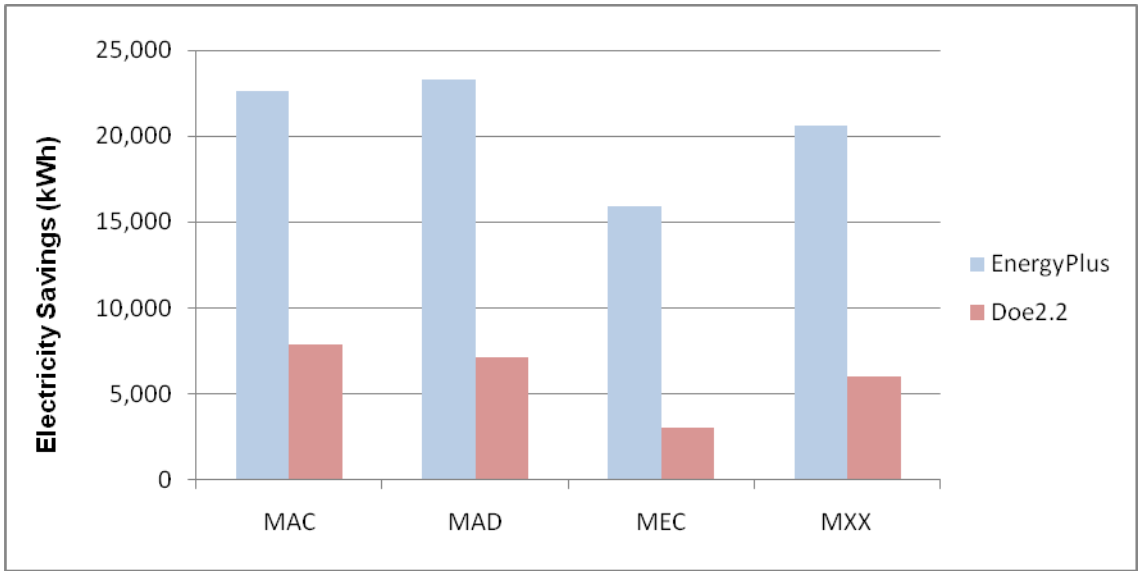

Figure 4-9. Electricity savings results for condenser specific efficiency by climate zone

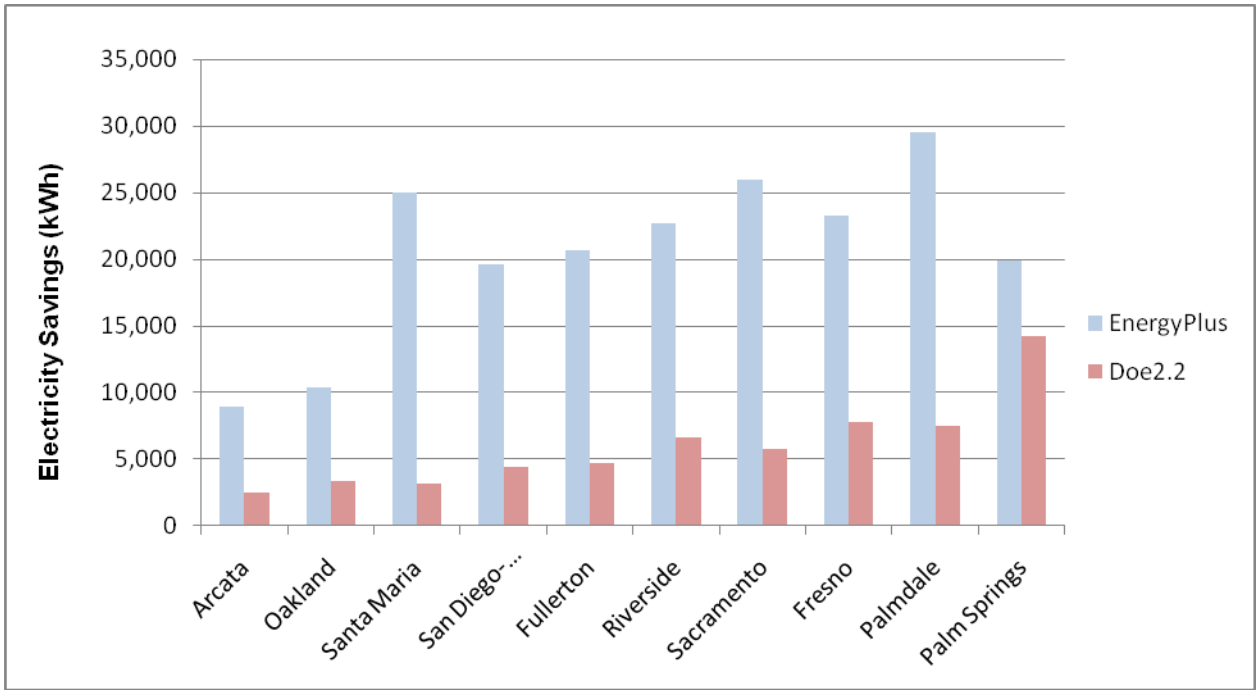

Floating Suction Pressure

Table 4-11 presents the simulation results for the floating suction pressure measure for the modeled supermarket prototypes from DOE- 2.2R and EnergyPlus. Figures 4-10 and 4-11 present this information graphically.

Table 4-11: Analysis results for floating suction pressure

Store Prototype/ Climate Zone	DOE-2.2R			Energy Plus		
	Electricity Savings (kWh)	Natural Gas Savings (Therms)	TDV Cost Savings ($)	Electricity Savings (kWh)	Natural Gas Savings (Therms)	TDV Cost Savings ($)
MAC Average	31,806	0	$61,975	21,600	784	$41,941
MAD Average	34,457	0	$69,581	19,519	0	$39,069
MEC Average	29,192	0	$54,692	25,179	783	$47,217
MFC Average	34,029	0	$64,516	22,922	783	$43,475
MFD Average	39,510	0	$76,613	25,524	0	$49,460
MXX Average	33,799	0	$65,475	22,949	470	$44,232
Arcata	31,755	0	$60,393	27,054	525	$51,385
Oakland	32,828	0	$62,842	23,733	502	$45,441
Santa Maria	32,130	0	$60,632	19,367	467	$36,513
San Diego-Lindbergh	32,130	0	$60,632	19,367	467	$36,513
Fullerton	32,115	0	$60,416	19,912	466	$37,385
Riverside	33,761	0	$65,235	21,574	466	$41,390
Sacramento	34,150	0	$67,751	24,664	475	$48,889
Fresno	35,365	0	$70,153	21,173	442	$41,742
Palmdale	34,629	0	$68,228	30,448	464	$59,741
Palm Springs	38,714	0	$76,829	17,985	390	$34,708

Figure 4-10. Electricity savings results for floating suction pressure by store type

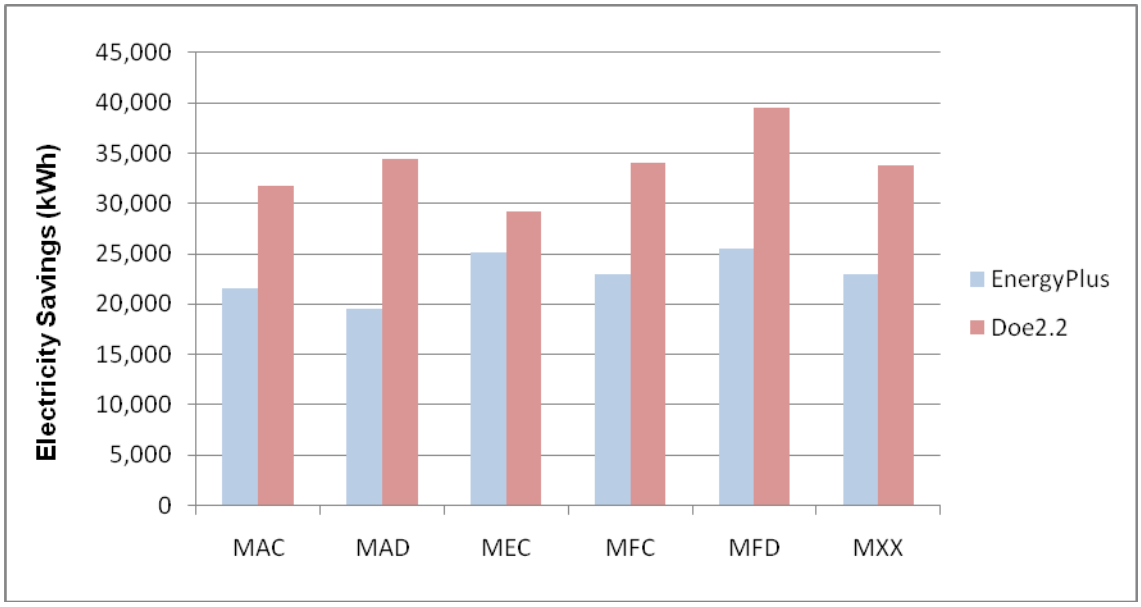

Figure 4-11. Electricity savings results for floating suction pressure by climate zone

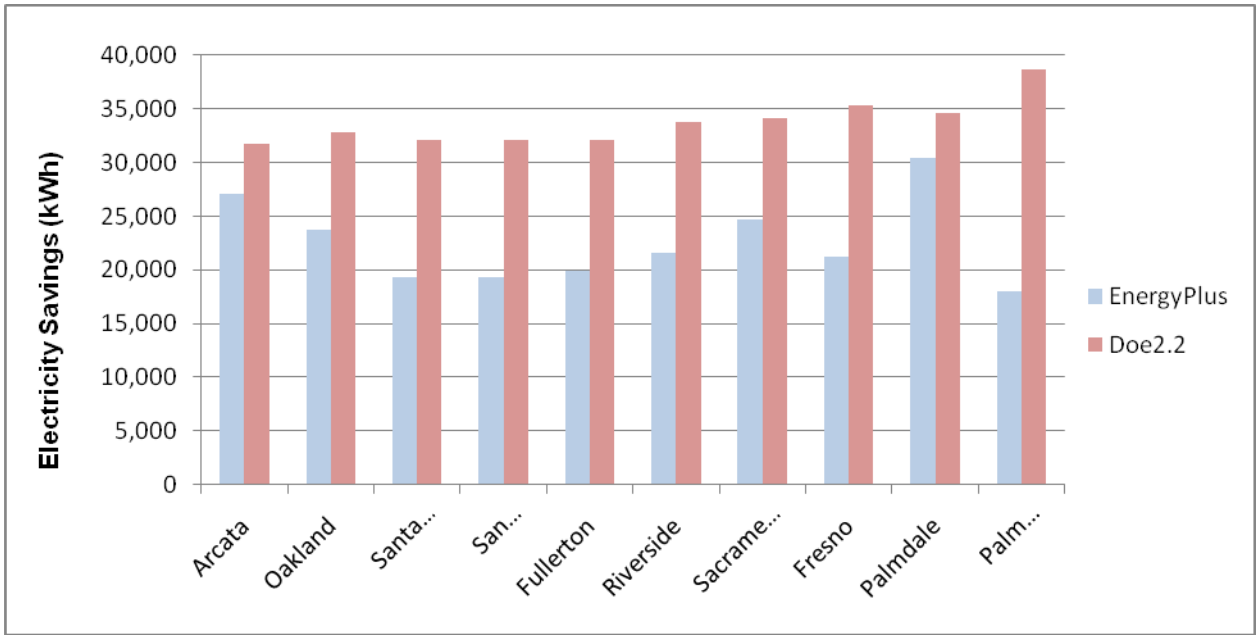

Mechanical Subcooling

Table 4-12 presents the simulation results for the mechanical subcooling measure for the modeled supermarket prototypes from DOE- 2.2R and Energy Plus. Figures 4-12 and 4-13 present this information graphically.

Table 4-12: Analysis results for mechanical subcooling

Store Prototype/ Climate Zone	DOE-2.2R		Energy Plus	
	Electricity Savings (kWh)	TDV Cost Savings ($)	Electricity Savings (kWh)	TDV Cost Savings ($)
MAC Average	19,525	$40,615	70,231	$144,485
MAD Average	19,386	$51,008	48,882	$124,443
MEC Average	18,447	$36,178	23,288	$45,598
MFC Average	31,455	$61,459	44,169	$86,167
MFD Average	38,604	$78,046	(2,403)	-$5,081
MXX Average	25,483	$53,461	36,834	$79,122
Arcata	21,445	$40,397	30,115	$56,244
Oakland	22,151	$43,149	35,602	$70,638
Santa Maria	23,859	$47,852	47,783	$96,049
San Diego-Lindbergh	23,859	$47,852	47,783	$96,049
Fullerton	25,048	$50,960	45,990	$96,219
Riverside	26,262	$57,417	40,030	$93,452
Sacramento	25,369	$55,331	33,383	$76,977
Fresno	27,260	$60,187	40,617	$94,010
Palmdale	26,381	$56,833	15,146	$35,789
Palm Springs	35,143	$80,569	41,587	$98,739

Figure 4-12. Electricity savings results for mechanical subcooling by store type

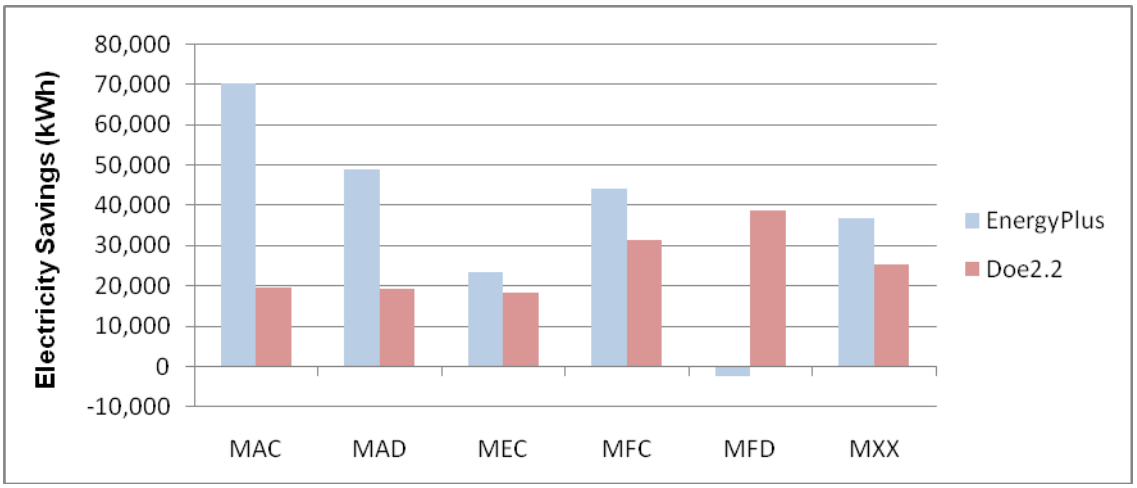

Figure 4-13. Electricity savings results for mechanical subcooling by climate zone

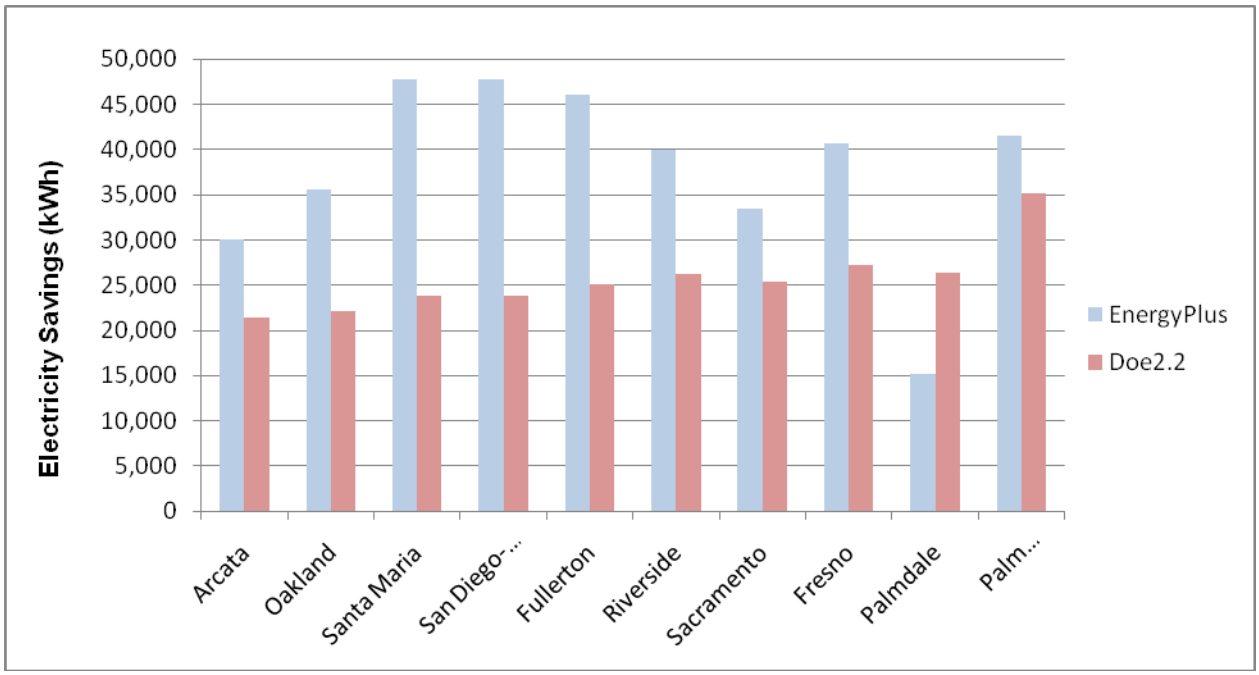

Display Case Lighting Control

Table 4-13 presents the simulation results for the display case lighting control measure for the modeled supermarket prototypes from DOE-2.2R and EnergyPlus. Figures 4-14 and 4-15 present this information graphically.

Table 4-13. Analysis results for display case lighting control

Store Prototype/ Climate Zone	DOE-2.2R			Energy Plus		
	Electricity Savings (kWh)	Natural Gas Savings (Therms)	TDV Cost Savings ($)	Electricity Savings (kWh)	Natural Gas Savings (Therms)	TDV Cost Savings ($)
MAC Average	147,601	0	$215,625	144,563	(480)	$211,207
MAD Average	145,447	0	$212,347	135,925	(392)	$198,482
MEC Average	147,397	0	$215,281	130,174	(480)	$190,129
MFC Average	154,150	0	$225,938	121,800	(480)	$178,516
MFD Average	154,476	0	$226,498	129,779	(439)	$190,284
MXX Average	149,814	0	$219,138	132,448	(454)	$193,724

Store Prototype/ Climate Zone	DOE-2.2R			Energy Plus		
	Electricity Savings (kWh)	Natural Gas Savings (Therms)	TDV Cost Savings ($)	Electricity Savings (kWh)	Natural Gas Savings (Therms)	TDV Cost Savings ($)
Arcata	147,211	0	$219,404	137,388	(515)	$204,723
Oakland	148,289	0	$216,588	111,060	(406)	$162,266
Santa Maria	151,792	0	$224,138	132,683	(471)	$195,863
San Diego-Lindbergh	151,792	0	$224,138	132,683	(471)	$195,863
Fullerton	150,547	0	$217,441	132,804	(467)	$191,775
Riverside	149,793	0	$214,363	134,082	(456)	$191,850
Sacramento	148,743	0	$218,384	135,918	(474)	$199,538
Fresno	150,783	0	$221,880	133,883	(438)	$196,987
Palmdale	149,023	0	$215,383	139,609	(442)	$201,759
Palm Springs	154,665	0	$227,052	131,938	(374)	$193,686

Figure 4-14. Electricity savings results for display case lighting control by store type

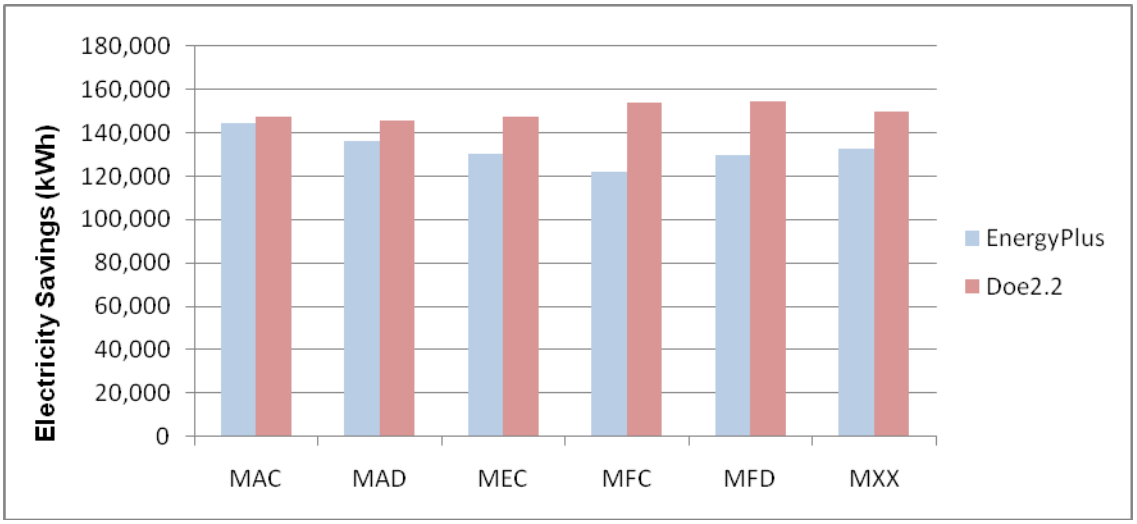

Figure 4-15. Electricity savings results for display case lighting control by climate zone

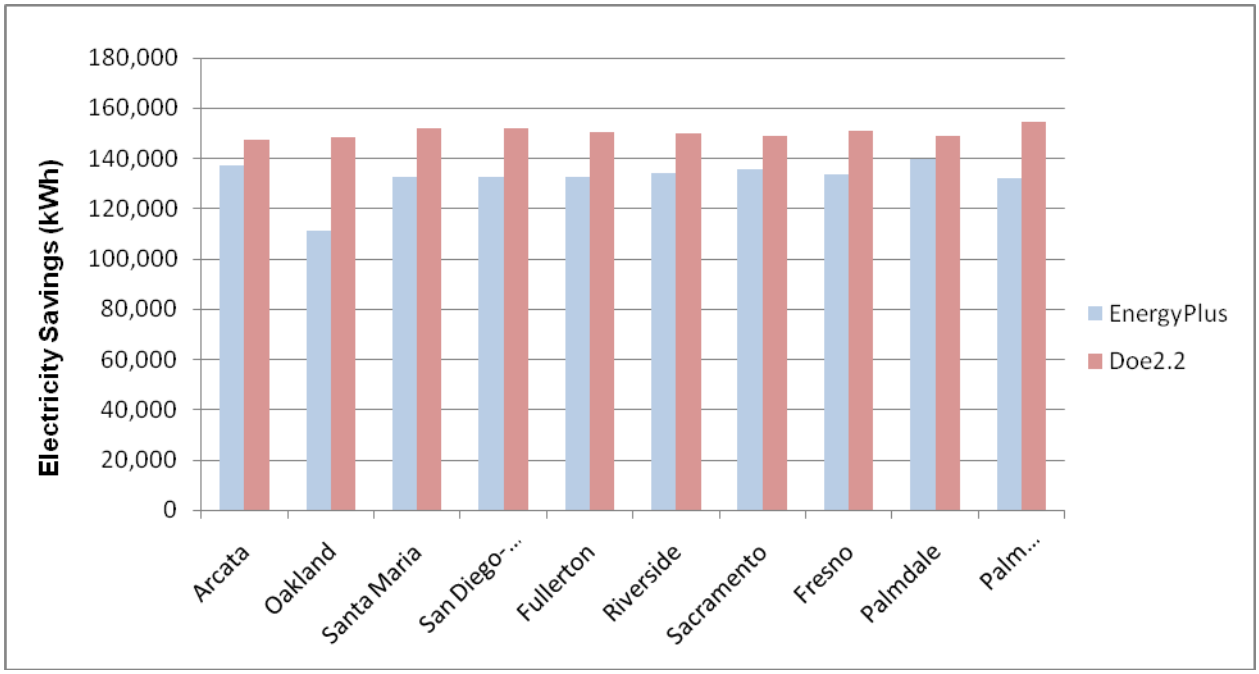

Liquid-Suction Heat Exchangers

Table 4-14 presents the simulation results for the liquid-suction heat exchangers measure for the modeled supermarket prototypes from DOE-2.2R and EnergyPlus. Figures 4-16 and 4-17 present this information graphically.

Table 4-14. Analysis results for liquid-suction heat exchangers

Store Prototype/ Climate Zone	DOE-2.2R		Energy Plus	
	Electricity Savings (kWh)	TDV Cost Savings ($)	Electricity Savings (kWh)	TDV Cost Savings ($)
MAC Average	40,919	$88,088	67,906	$145,108
MAD Average	37,738	$81,461	56,947	$122,399
MEC Average	43,550	$86,639	25,221	$50,222
MFC Average	56,358	$114,081	38,931	$78,855
MFD Average	50,502	$103,043	41,515	$84,610
MXX Average	45,813	$94,662	46,104	$96,239
Arcata	38,075	$74,412	44,214	$86,075
Oakland	41,585	$83,442	44,283	$89,797
Santa Maria	48,017	$97,512	43,979	$89,865
San Diego-Lindbergh	48,017	$97,512	43,979	$89,865

Store Prototype/ Climate Zone	DOE-2.2R		Energy Plus	
	Electricity Savings (kWh)	TDV Cost Savings ($)	Electricity Savings (kWh)	TDV Cost Savings ($)
Fullerton	47,890	$97,891	43,463	$89,806
Riverside	47,530	$100,141	46,405	$99,628
Sacramento	44,853	$95,328	44,887	$97,239
Fresno	47,958	$101,912	45,243	$97,706
Palmdale	44,032	$93,238	54,924	$118,065
Palm Springs	57,468	$121,790	49,077	$105,121

Figure 4-16. Electricity savings results for liquid-suction heat exchangers by store type

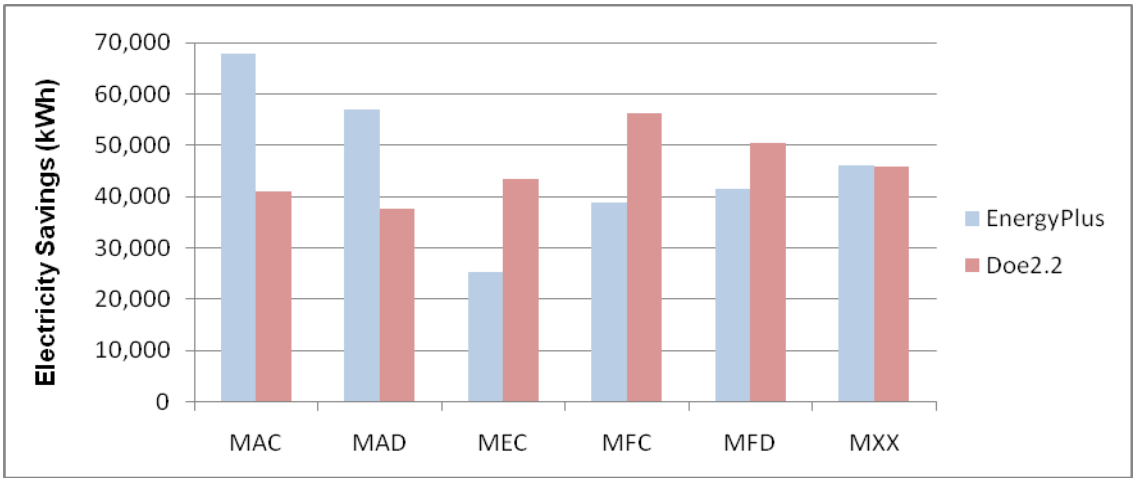

Figure 4-17. Electricity savings results for liquid-suction heat exchangers by climate zone

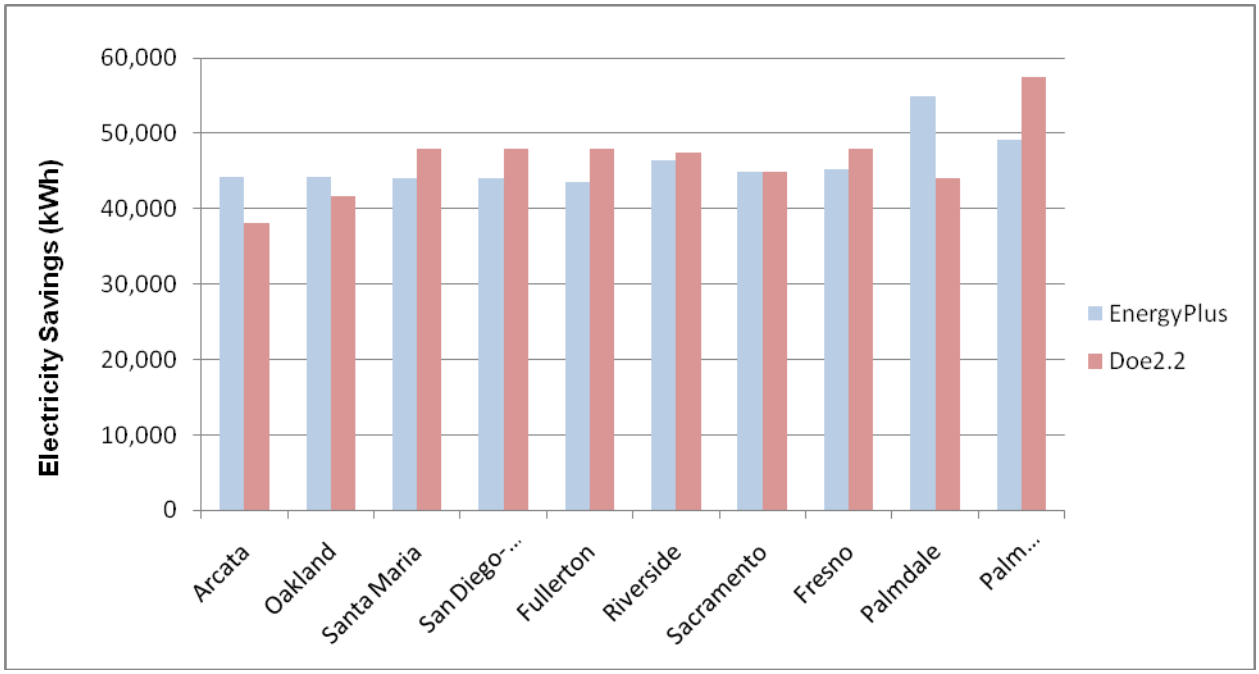

Refrigeration Heat Recovery

Table 4-15 presents the simulation results for the refrigerant heat recovery measure for the modeled supermarket prototypes from DOE-2.2R and EnergyPlus. Figures 4-18 and 4-19 present this information graphically.

Table 4-15. Analysis results for refrigerant heat recovery

Store Prototype/ Climate Zone	DOE-2.2R			Energy Plus		
	Electricity Savings (kWh)	Natural Gas Savings (Therms)	TDV Cost Savings ($)	Electricity Savings (kWh)	Natural Gas Savings (Therms)	TDV Cost Savings ($)
MAC Average	(65,573)	26,562	$417,897	(37,773)	25,708	$463,232
MAD Average	(77,311)	26,562	$395,140	(75,353)	18,485	$232,076
MEC Average	(42,806)	26,567	$466,324	(21,676)	25,708	$497,019
MFC Average	(10,684)	26,583	$532,085	(24,326)	25,708	$477,897
MFD Average	11,150	26,586	$579,114	(62,145)	18,485	$250,841
MXX Average	(37,045)	26,572	$478,112	(44,255)	22,819	$384,213
Arcata	(30,893)	46,475	$875,280	(59,809)	29,774	$449,034
Oakland	(27,214)	35,289	$665,288	(58,228)	26,135	$417,337
Santa Maria	(23,097)	23,855	$445,873	(62,864)	21,957	$342,885

Store Prototype/ Climate Zone	DOE-2.2R			Energy Plus		
	Electricity Savings (kWh)	Natural Gas Savings (Therms)	TDV Cost Savings ($)	Electricity Savings (kWh)	Natural Gas Savings (Therms)	TDV Cost Savings ($)
San Diego-Lindbergh	(23,097)	23,855	$445,873	(62,864)	21,957	$342,885
Fullerton	(37,168)	20,797	$356,950	(55,736)	21,389	$319,677
Riverside	(43,020)	20,374	$345,483	(39,903)	20,522	$352,942
Sacramento	(45,601)	27,071	$479,425	(43,729)	24,444	$424,240
Fresno	(44,542)	22,555	$397,396	(40,926)	21,273	$375,203
Palmdale	(51,705)	24,110	$419,687	(4,668)	22,691	$488,589
Palm Springs	(39,992)	8,534	$106,374	(18,026)	14,551	$291,720

Figure 4-18. Electricity savings results for refrigerant heat recovery by store type

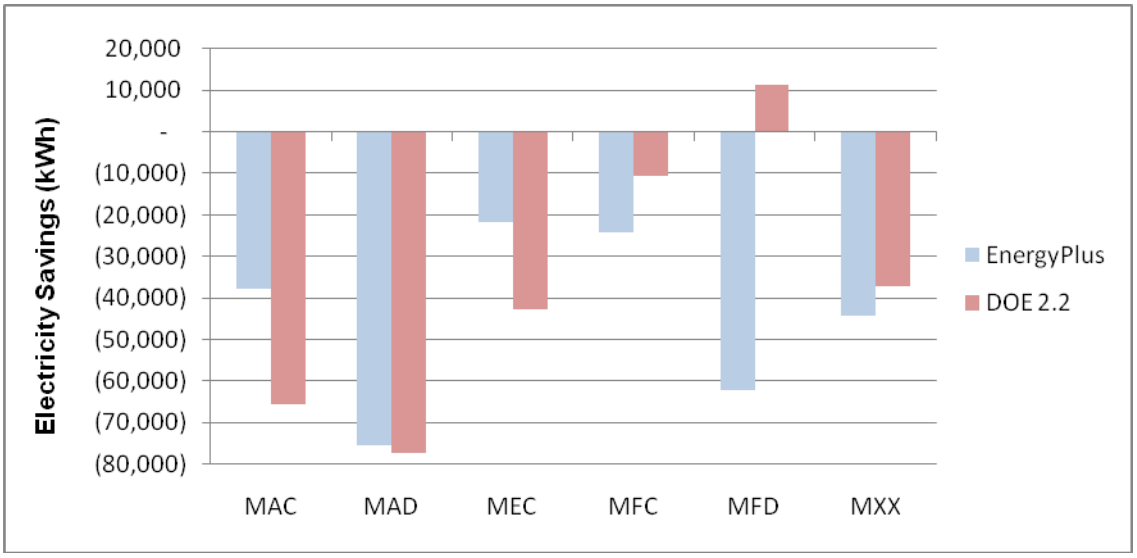

Figure 4-19. Electricity savings results for refrigerant heat recovery by climate zone

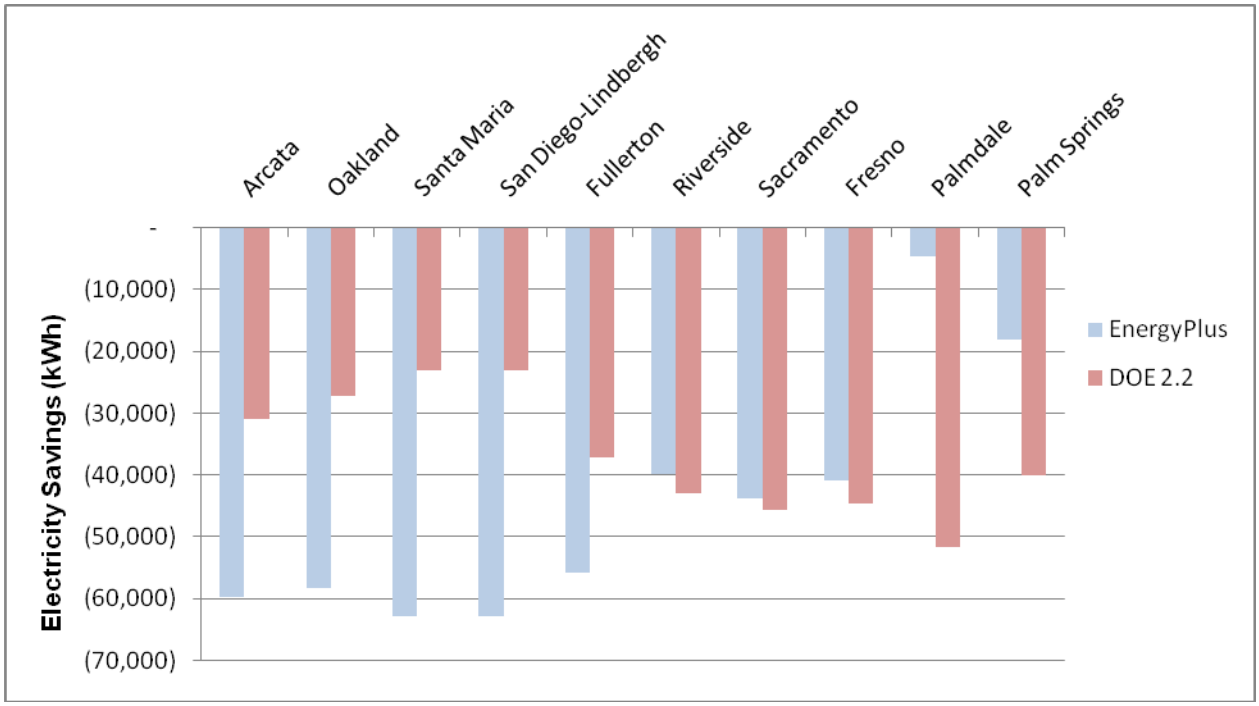

CO2 Secondary (indirect) or Cascade Cooling

Table 4-16 presents the simulation results for the indirect cooling measure for the modeled supermarket prototypes from DOE-2.2R and EnergyPlus. Figures 4-20 and 4-21 present this information graphically.

Table 4-16. Analysis results for indirect cooling

Store Prototype/ Climate Zone	DOE-2.2R			Energy Plus		
	Electricity Savings (kWh)	Natural Gas Savings (Therms)	TDV Cost Savings ($)	Electricity Savings (kWh)	Natural Gas Savings (Therms)	TDV Cost Savings ($)
MAC Average	(168,063)	0	($403,557)	(116,627)	(4,355)	($280,521)
Arcata	(229,470)	0	($526,942)	(156,681)	(4,839)	($359,793)
Oakland	(233,270)	0	($541,989)	(155,286)	(4,710)	($360,797)
Santa Maria	(233,498)	0	($542,760)	(150,013)	(4,701)	($348,702)
San Diego-Lindbergh	(238,154)	0	($557,900)	(147,882)	(4,376)	($346,429)
Fullerton	(115,746)	0	($280,740)	(129,872)	(4,382)	($315,003)

Store Prototype/ Climate Zone	DOE-2.2R			Energy Plus		
	Electricity Savings (kWh)	Natural Gas Savings (Therms)	TDV Cost Savings ($)	Electricity Savings (kWh)	Natural Gas Savings (Therms)	TDV Cost Savings ($)
Riverside	(120,736)	0	($302,226)	(102,242)	(4,248)	($255,933)
Sacramento	(118,373)	0	($300,463)	(116,809)	(4,470)	($296,494)
Fresno	(124,269)	0	($314,963)	(95,205)	(4,136)	($241,299)
Palmdale	(125,039)	0	($314,266)	(58,327)	(4,173)	($146,595)
Palm Springs	(142,071)	0	($353,320)	(53,949)	(3,512)	($134,168)

Figure 4-20. Electricity savings results for indirect cooling by store type

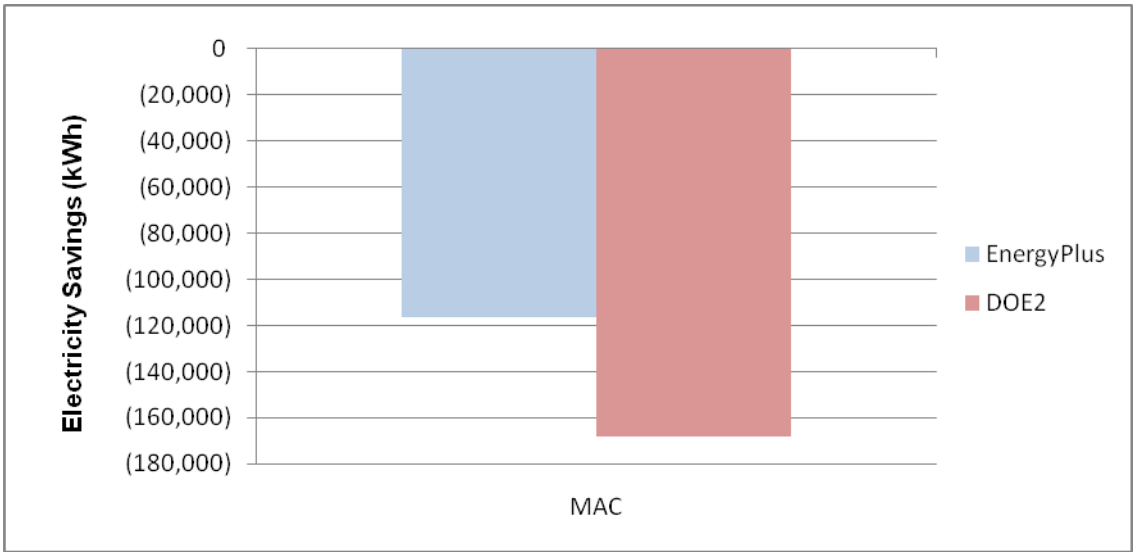

Figure 4-21. Electricity savings results for indirect cooling by climate zone

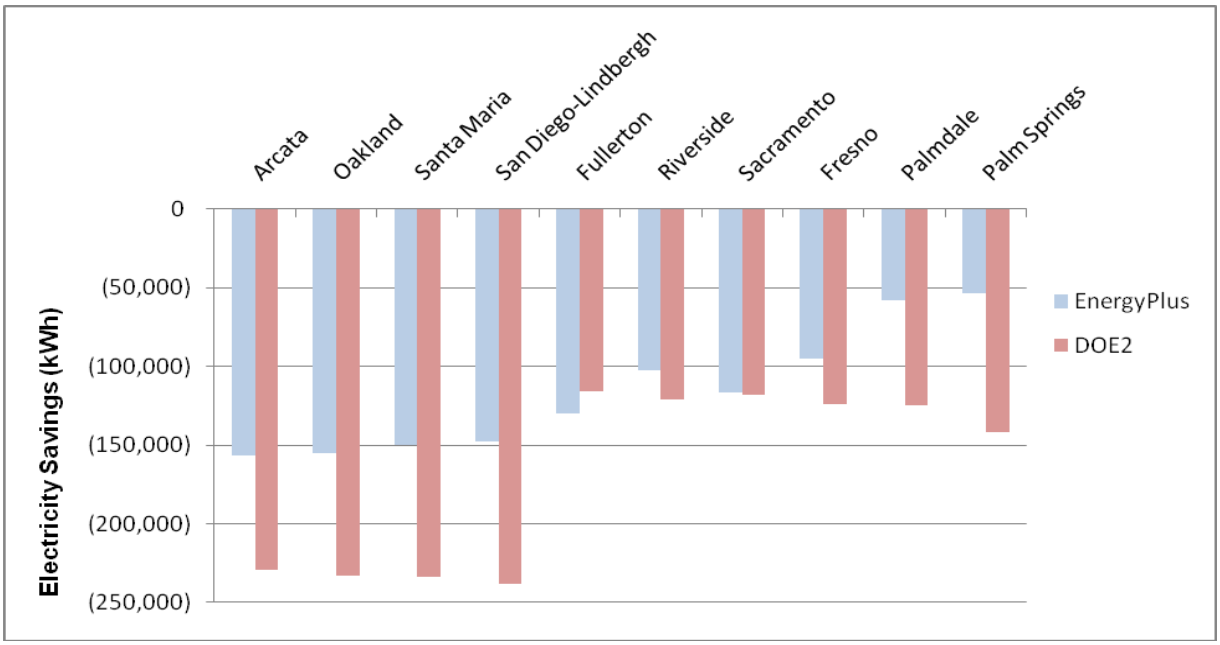

Walk-in Variable Speed Fan Control

Table 4-17 presents the simulation results for the walk-in variable speed fan control measure for the modeled supermarket prototypes from DOE-2.2R and EnergyPlus. Figures 4-22 and 4-23 present this information graphically.

Table 4-17. Analysis results for walk-in variable speed fan control

Store Prototype/ Climate Zone	DOE-2.2R		Energy Plus	
	Electricity Savings (kWh)	TDV Cost Savings ($)	Electricity Savings (kWh)	TDV Cost Savings ($)
MAC Average	25,798	$61,330	25,313	$60,133
MAD Average	25,674	$61,088	27,461	$65,284
MEC Average	26,284	$61,981	18,870	$44,490
MFC Average	27,856	$66,136	11,370	$26,993
MFD Average	27,772	$66,117	12,844	$30,578
MXX Average	26,677	$63,330	19,172	$45,496
Arcata	26,600	$63,135	21,543	$51,062
Oakland	26,849	$63,709	19,425	$46,077

Store Prototype/ Climate Zone	DOE-2.2R		Energy Plus	
	Electricity Savings (kWh)	TDV Cost Savings ($)	Electricity Savings (kWh)	TDV Cost Savings ($)
Santa Maria	27,293	$65,460	16,666	$39,936
San Diego-Lindbergh	27,293	$65,460	16,666	$39,936
Fullerton	26,787	$63,284	17,316	$40,882
Riverside	26,658	$62,879	18,505	$43,677
Sacramento	26,647	$63,442	20,428	$48,679
Fresno	26,520	$62,975	18,814	$44,716
Palmdale	26,303	$61,888	22,440	$52,793
Palm Springs	26,370	$62,990	16,727	$39,995

Figure 4-22. Electricity savings results for walk-in variable speed fan control by store type

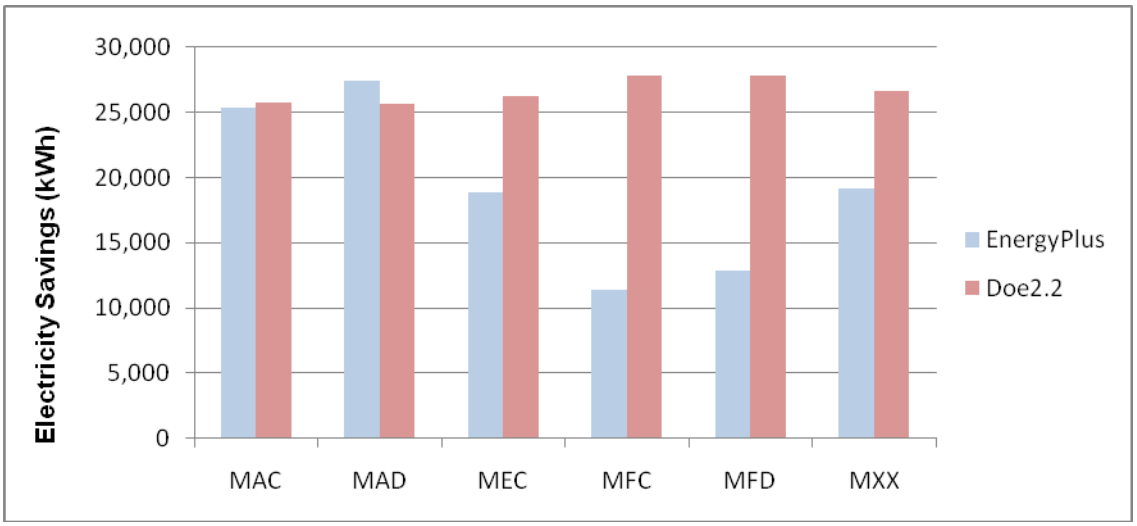

Figure 4-23. Electricity savings results for walk-in variable speed fan control by climate zone

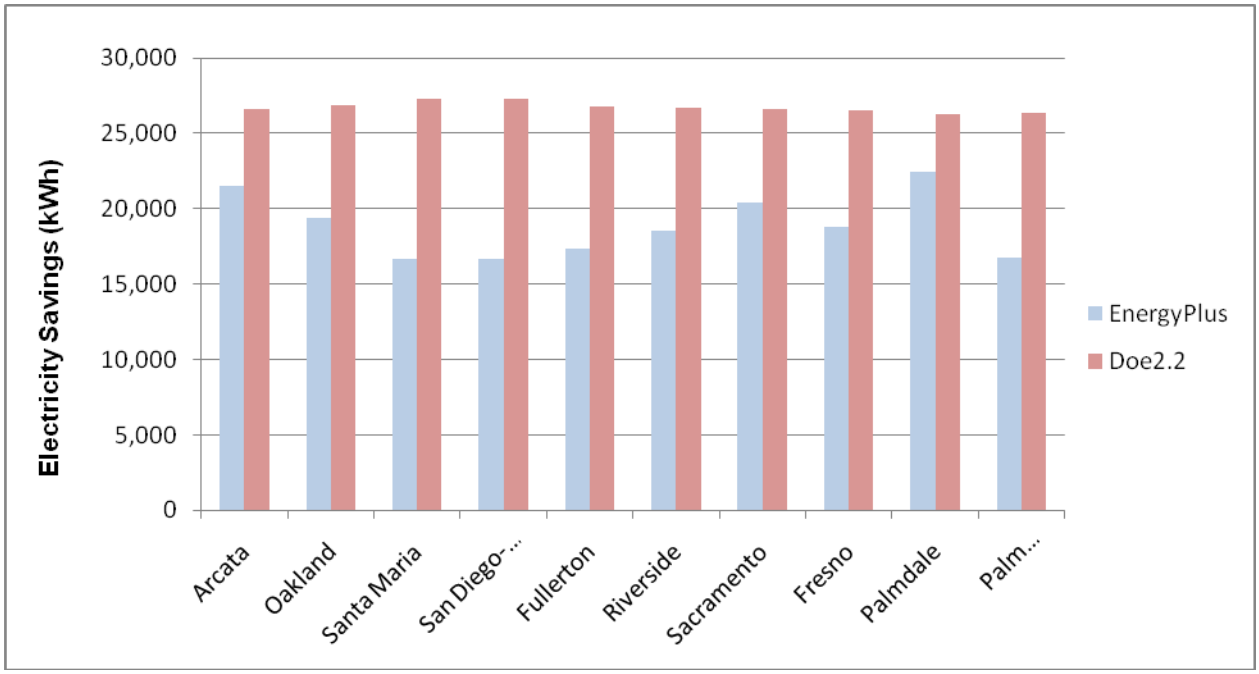

4.5 Summary of Energy Comparison Results

A summary of the results for all measures are graphically shown below in Figure 4-24 and Figure 4-25. A discussion of these results is provided in the following section.

Figure 4-24. Average electricity savings results for all measures

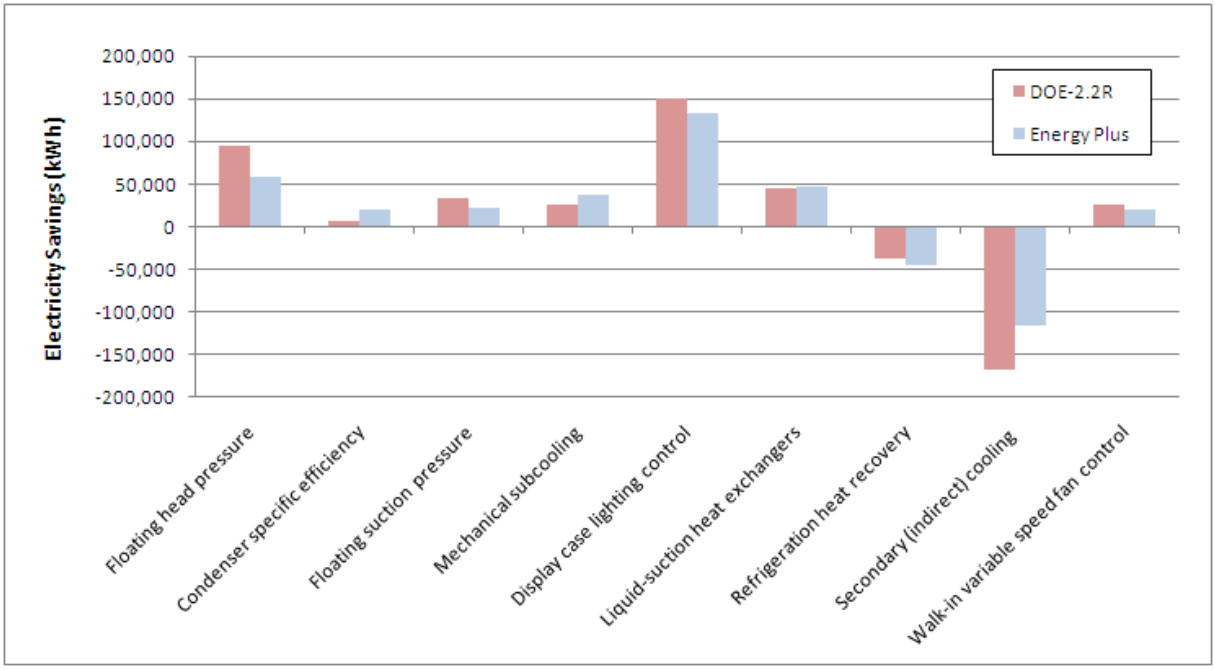

Figure 4-25. Average natural gas savings results for all measures

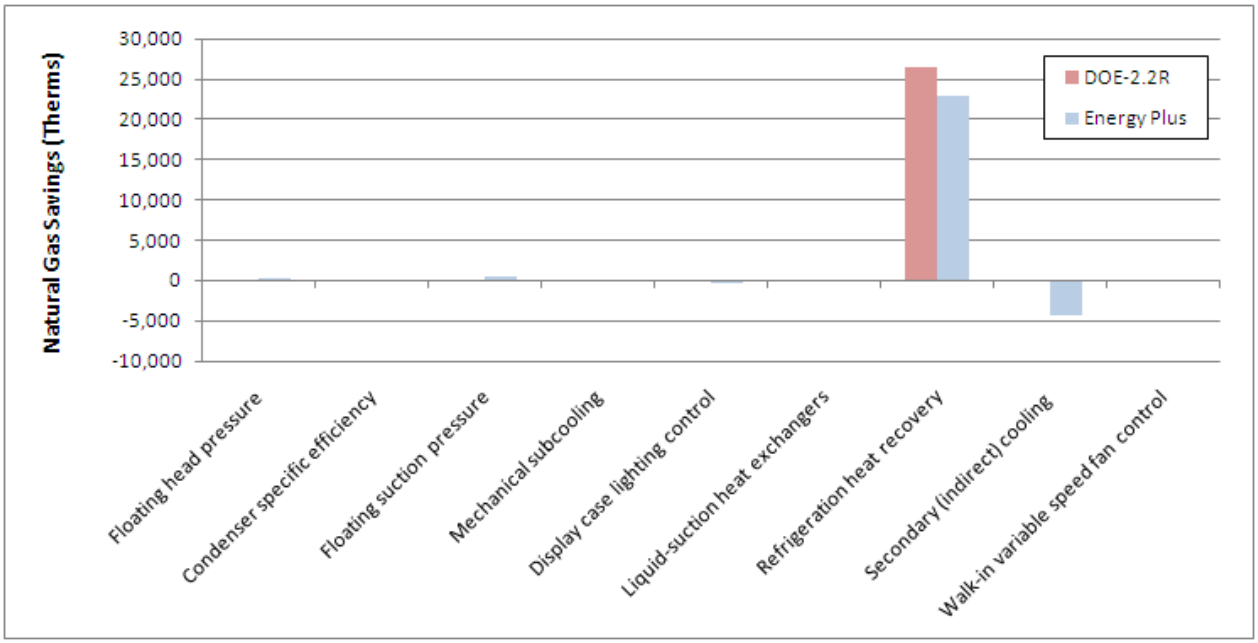

4.6 Discussion of Energy Model Comparison

Overall, the baseline energy consumption generated by the EnergyPlus model is between 3% and 11% greater than that generated by DOE-2.2R for the modeled medium-sized prototype stores, while the difference across specific energy conservation measures are wide-ranging.

One of the major differences between the DOE-2.2R and EnergyPlus simulation engines that may contribute to these varying results is the limited variability of a mass flow rate in EnergyPlus. Specifically, the refrigerant flow rate, which is highly variable in reality, is not mathematically calculated by EnergyPlus but assumed to be constant. This shortcoming in EnergyPlus causes wide variation in results for energy conservation measures that affect refrigerant mass flow rate—namely floating head pressure, floating suction pressure, liquid-suction heat exchangers, and refrigeration heat recovery. EnergyPlus' inability to accurately model the refrigerant mass flow rate also indirectly impacts the modeling of the mechanical subcooling measure, since this measure assumes the use of floating head pressure.

Another important difference in the models is that no flow/pressure control components (including variable speed pumps) are available in EnergyPlus to model varying head pressure based on ambient conditions, which is important for accurately simulating the floating head pressure measure. In contrast, modeling capabilities in DOE-2.2R are available for flow/pressure control components that are impacted by floating head pressure.

Likewise, the temperature difference between saturated condensing and design dry bulb temperature (TD) cannot be varied in EnergyPlus whereas it can be in DOE-2.2R. To compensate for these shortcomings in EnergyPlus, a variable speed condenser fan was modeled, which to some degree accounts for changes in the ambient conditions. A fixed TD of 10°F was also used in EnergyPlus for all prototype stores across all climate zones.

Saturated suction temperature (SST) also cannot be adjusted in EnergyPlus. Since this adjustment is needed to model floating suction pressure, the floating suction pressure measure was instead modeled by adjusting the suction temperature control type to floating while the suction temperature control was kept constant in the baseline. Similarly, to model liquid-suction heat exchangers, EnergyPlus was only able to model the temperature associated with liquid subcooling without taking the refrigerant mass flow rate into account. The refrigeration heat recovery measure is also directly impacted by these model shortcomings in EnergyPlus.

Another difference between DOE-2.2R and Energy Plus is the lack of ability to calculate the condenser efficiency in EnergyPlus, whereas DOE-2.2R calculates the condenser efficiency based on the load of the refrigeration system. To model the condenser specific efficiency measure, the fan power was adjusted by the efficiency difference (percent) between the baseline and ECM, as modeled in DOE2.2R; however, because the condenser capacity is kept constant in EnergyPlus, the results from EnergyPlus show significantly higher energy savings. Furthermore, saturated condensing temperature, which is varied in DOE-2.2R, was also kept constant in EnergyPlus.

Other measures, such as display case lighting control and walk-in variable speed fan control, show fairly similar results across both models. However, DOE-2.2R does not capture the reduction in heat load that results from more efficient lighting, as evidenced by the results which show no additional natural gas consumption.

4.7 Conclusion of Energy Model Comparison

The comparison of the DOE-2.2R and EnergyPlus simulation results demonstrates that the models differ both in their capabilities and precision of modeling different design characteristics of supermarket refrigeration systems. In general, EnergyPlus lacks the ability to vary certain variables that can be varied in the DOE-2.2R model, which in part explains some of the discrepancies in the energy savings results. However, without further analysis of the results, a complete understanding of the causes of the observed discrepancies is not possible. In particular, the energy conservation measures that are more complex, such as the secondary (indirect) cooling, will require a more in depth review in order to fully understand the model discrepancies. Even so, given the similarity of results generated by both models, there is potential for EnergyPlus to be used as a tool to support future regulatory decisions if additional model improvements are made.

5. Summary and Conclusions

Commercial and industrial businesses with large refrigeration and air-conditioning systems were identified in the 2008 ARB Scoping Plan as a high-GWP emissions sector which should be assessed to determine if cost-effective GHG emission reductions could be made. The ARB and its research contractor ICF International were assisted in the research by the CEC and its contracted researchers (under a separate contract not under the control of the ARB).

Supermarkets were determined to be the single most advantageous business type that would benefit from energy conservation measures as written into the California Title 24 building code, Part 6 for energy conservation measures. Additional refrigerant leak reduction measures, above and beyond the existing Federal and ARB refrigerant regulations, were also determined to be feasible.

Energy conservation measures for supermarkets have been developed through the Savings By Design program, which served as a preliminary source of information. The most cost-effective and technically mature measures were selected for additional energy savings assessment using both the DOE 2.2R and EnergyPlus energy models.

Leak reduction measures were developed after a review of the best practices to prevent refrigerant leaks as recommended by ASHRAE, the U.S. EPA GreenChill Program, and RealZero.

All energy conservation measures are very cost-effective, resulting in significant savings over BAU, between $14,000 and $68,000 annually, depending upon store size. The leak reduction measures are also cost effective, with annual savings of $1,599, $5,481, and $6,562 for small, medium, and large supermarkets respectively.

Cost, savings, and reductions from adoption of the ECMs and LRMs are shown below.

Table 5-1. Cost, Savings, and Reductions, Per Year, Per Store, from ECMs and LRMs

Cost, Savings, and Reductions Category	Small	Medium	Large (Big Box)
Energy Conservation Measures (ECMs) (per store)			
Initial added cost of ECMs	$51,069	$136,638	$167,961
Annual Savings of ECMs	$17,975	$62,935	$79,754
Net Annual Savings of ECMs	$14,570	$53,826	$68,556
Electricity reductions (kWh)	78,618	272,255	322,054
Natural gas reductions (therms)	7,573	26,572	35,118
GHG Annual Reductions ($MTCO_2E$)	51	178	218
Cost of GHG Reduction ($/$MTCO_2E$)	$(295)	$(313)	$(338)
Leak Reduction Measures (LRMs) (per store)			
Initial added cost of LRMs	$4,930	$6,780	$7,630
Annualized Savings of LRMs	$1,599	$5,481	$6,562
Net Annualized Savings of LRMs	$1,270	$5,029	$6,053

Cost, Savings, and Reductions Category	Small	Medium	Large (Big Box)
Refrigerant Leak Reductions (lbs.)	11	56	68
GHG Annual Reductions ($MTCO_2E$)	20	100	123
Cost of GHG Reduction ($/$MTCO_2E$)	$(48)	$(39)	$(38)
ECMs and LRMs Totals			
Net Annualized Savings ECMs + LRMs, (average savings on a per store basis)	$15,840	$58,855	$74,609
Number of Stores (2010 baseline)	500	3,600	400
Annual Savings, all stores, by full implementation in 2029 (2011 $)	$9.5 million	$253 million	$35.5 million

GHG reductions of 0.6 $MMTCO_2E$ annually, above BAU, are expected by 2020, which will increase to 1.2 $MMTCO_2E$ annually by 2029 and every year thereafter, as the older refrigeration systems are replaced by more energy-efficient and more leak-tight systems. GHG reductions of the LRMs and ECMs are shown in Figure 5-1.

Figure 5-1. Annual GHG Reductions in CA from Supermarket ECMs and LRMs.

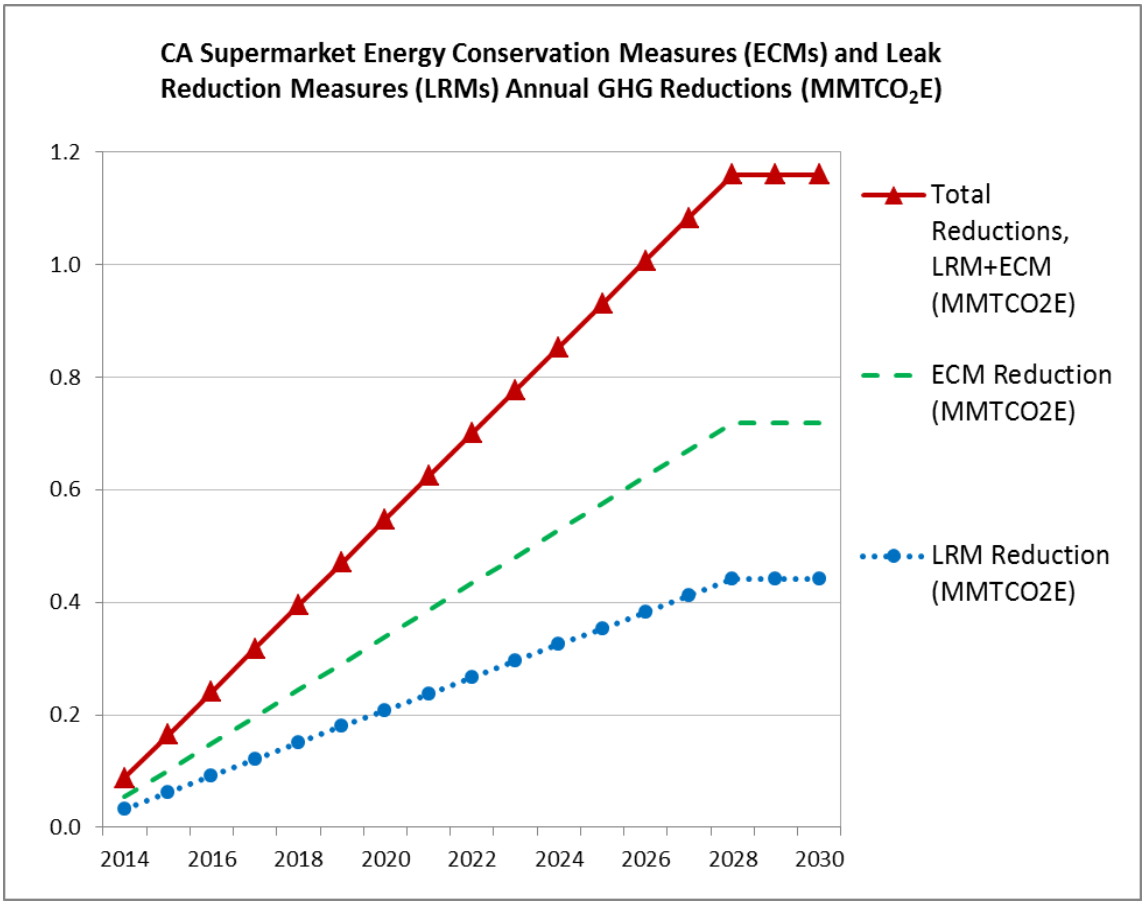

As expected from the cost savings of the measures, the cost of GHG reduction is also very cost effective, with effective negative costs of -\$295 to -\$338/MTCO_2E reduction for energy conservation measures. Leak reduction measures are also cost-effective, with negative costs of -\$38/MTCO_2E for large supermarkets, -\$39/MTCO_2E for medium supermarkets and -\$47/MTCO_2E for small supermarkets.

Supermarket energy conservation measures and refrigerant leak reduction measures are cost-effective means of reducing overall GHG emissions from the retail food sector. All measures assessed are currently available for use in new supermarket construction or refrigeration equipment replacement. Although the significant cost savings over the lifetime of the equipment would appear to be sufficient incentive to use the ECMs and LRMs without any mandatory regulations, the high initial added cost (\$56,000 - \$176,000) per store is apparently a barrier to implementation of these measures to many supermarkets.

This page intentionally left blank.

6. Recommendations

The ECMs and LRMs analyzed in this study are recommended for inclusion into the Title 24 Building Code 2013 updates (effective January 1, 2014). The measures would apply to retail food supermarkets with more than 8,000 square feet, and would only apply to new supermarket construction or new refrigeration systems installed in existing supermarkets. The measures are not simple drop-in replacements and changes, and are therefore not recommended for equipment retrofit while the existing equipment is still functional.

Additional performance measures should be investigated for supermarkets and other business types that use both large amounts of energy and high-GWP refrigerants. The performance measures would be developed by measuring the cumulative impact of both energy use and refrigerant emissions to give an overall total equivalent warming impact, or “carbon footprint” goal for facilities. The performance measures would be helpful as a common denominator to assess the best approaches for reducing GHGs where energy use and refrigerant impact may be in conflict (e.g., when a low-GHG refrigerant system, such as a carbon dioxide system, may use more electricity than a conventional high-GHG refrigerant system). Additionally, businesses could meet a performance measure in the means they deem best for a given facility, by reduced energy use, using low-charge refrigerant systems, using lower-GWP refrigerant, or by a combination of approaches.

This page intentionally left blank.

7. References

Anderson, 2005. "Is STEK as Good as Reported? Uncertainties in the concept underlying the proposed European Regulation on fluorinated gases", 14 June 2005. Jason Anderson, Institute for European Environmental Policy (IEEP). Available at: http://www.ieep.eu/assets/232/Fgas.pdf

ARB, 2009. Appendix B: California Facilities and Greenhouse Gas Emissions Inventory – High-Global Warming Potential Stationary Source Refrigerant Management Program. October 2009. Appendix to Initial Statement of Reasons (ISOR) for Proposed Regulation for the Management of High Global Warming Potential Refrigerants for Stationary Sources. California Air Resources Board (Air Resources Board). Available at: http://www.arb.ca.gov/cc/reftrack/APPENDIX_B_10_22_.pdf (accessed 4 April 2012).

ARMINES, 2009. "Inventory of Direct and Indirect GHG Emissions from Stationary Air conditioning and Refrigeration Sources, with Special Emphasis on Retail Food Refrigeration and Unitary Air Conditioning". Final Report, March 2009. Prepared by Sabine Saba, Rayan Slim, Lionel Palandre, and Denis Clodic of ARMINES Center for Energy and Processes; for California Air Resources Board. ARB research contract 06-325. Available at: http://www.arb.ca.gov/cc/commref/stationary_refrigeration_ghg_emissions_armines_report_march_2009.pdf (accessed 17 August 2011).

ASHRAE, 2011. Proposed Revision of Standard 147-2002, "Reducing the Release of Halogenated Refrigerants from Refrigerating and Air-Conditioning Equipment and Systems". May 2011. American Society of Heating, Refrigeration, and Air-conditioning Engineers. Available at: https://osr.ashrae.org/Public%20Review%20Draft%20Standards%20Lib/Std-147-2002R-PPR2%20%28chair-approved-R1%29.pdf (accessed 28 May 2011).

Baxter, 2002. "Advances in Supermarket Refrigeration Systems", 2002. Van D. Baxter, Oak Ridge National Laboratory, Oak Ridge, Tennessee. Available at: http://www.arb.ca.gov/cc/commref/adv_supmkt_ref_syst.pdf (accessed 10 January 2011).

Bivens and Gage, 2004. Commercial Refrigeration Systems Emissions. Donald B. Bivens and Cynthia L. Gage. March 2004. Available at: www.epeeglobal.org/internet/docs/ETF_Paper_DBivens.doc

CEC PIER, 2004. "Investigation of Secondary Loop Supermarket Refrigeration Systems", March 2004. Prepared for California Energy Commission, Public Interest Energy Research Program; by Ramin T. Faramarzi of Southern California Edison, and David H. Walker of Foster Miller. PIER consultant report 500-04-013. Available at: http://www.arb.ca.gov/cc/commref/secondary_loop_supermarket_refrigeration_cec_pier_march_2004.pdf (accessed 13 May 2011).

Giant Eagle. 2009. Giant Eagle Receives Three Awards from U.S. EPA's GreenChill Advanced Refrigeration Partnership. Available at: http://www.epa.gov/greenchill/downloads/GiantEagle_Greenchill.pdf

Govtrack, 2012. H.R. 2454 (111th): American Clean Energy and Security Act of 2009. Status: Died. Passed House. Available at: http://www.govtrack.us/congress/bills/111/hr2454 (accessed 19 April 2012).

GreenChill, 2011. "GreenChill Best Practices Guidelines – Commercial Refrigeration Leak Prevention & Repairs", U.S. Environmental Protection Agency, Stratospheric Protection Division, May 2011. EPA 430-B-11-01. Available at: http://www.epa.gov/greenchill/downloads/leakpreventionrepairguidelines.pdf (accessed 12 June 2011).

ICF, 2011. "Lifecycle Analysis of High-Global Warming Potential Greenhouse Gas Destruction". Final Report October 2011. Prepared by ICF International for California Air Resources Board. ARB research contract 07-330. Available at: http://www.arb.ca.gov/research/rsc/10-28-11/item7dfr07-330.pdf (accessed 12 October, 2011]).

IOR, 2010. The Institute of Refrigeration (IOR). Real Zero – Reducing refrigerant emissions and leakage – feedback from the IOR Project. David J. Cowan, Jane Gartshore, Issa Chaer, Christina Francis, and Graeme Maidment. Presentation at Institute of Refrigeration, 22 April 2010. Available at: http://www.realzero.org.uk/web_images/papers/April%20paper%20laid%20out.pdf

IPCC, 2005. IPCC/TEAP (Intergovernmental Panel on Climate Change [IPCC] and Technology and Economic Assessment Panel [TEAP] Special Report on Safeguarding the Ozone Layer and the Global Climate Systems, 2005 (IPCC Special Report). Chapter 4 Refrigeration. Available at: http://www.ipcc.ch/pdf/special-reports/sroc/sroc04.pdf.

IPCC, 2007. "Contribution of Working Group I to the Fourth Assessment Report of the Intergovernmental Panel on Climate Change, 2007. The Physical Science Basis." Intergovernmental Panel on Climate Change. Available at: http://www.ipcc.ch/ (accessed 28 January 2011).

RealZero, 2009. "Designing Out Leaks: design standards and practices". January, 2009. Refrigerant Emissions and Leakage ZERO Project, RealZero. Available at: http://www.epa.gov/greenchill/downloads/RealZeroDesigningOutLeaks.pdf (accessed 23 February 2011).

Savings By Design, 2011. "Savings by Design Online Program Handbook" and multiple resources for energy efficient building design at: http://www.savingsbydesign.com/ (accessed 12 March 2011).

Southern California Edison, 2008. Refrigerants and Greenhouse Gases – White Paper on Approaches to Reducing Leakage and Improving the Performance of Supermarket Refrigeration Systems. December, 2008. Submitted to Devin Rauss of Southern California Edison Co. by Heschong Mahone Group, Inc. and CTG Energetics, Inc. Available at: http://www.arb.ca.gov/cc/commref/refrigerants_and_ghg_gases_white_paper_sce_dec_2008.pdf (accessed 3 February 2011).

UBA, 2009. "Comparative Assessment of the Climate Relevance of Supermarket Refrigeration Systems and Equipment". March 2009. Jan-Martin Rhiemeier, Dr. Jochen Harnisch, Christian Ters, Prof. Dr. Michael Kauffeld, Dr. André Leisewitz; for Umwelt Bundes Amt (UBA). Research report 206 44 300; Environmental Research of the Federal Ministry of the Environment, Nature Conservation and Nuclear Energy. Available at: http://www.umweltbundesamt.de/uba-info-medien-e/3743.html (accessed 15 January 2011).

UNEP, 2010. "Montreal Protocol on Substances that Deplete the Ozone Layer UNEP 2010 Report of the Refrigeration, Air Conditioning and Heat Pumps Technical Options Committee 2010 Assessment". February 2011. United Nations Environment Programme (UNEP). Available at: http://ozone.unep.org/Assessment_Panels/TEAP/Reports/RTOC/RTOC-Assessment-report-2010.pdf (accessed 14 April 2011).

UNEP, 2011. United Nations Environment Programme (UNEP) Open-ended Working Group of the Parties to the Montreal Protocol on Substances that Deplete the Ozone Layer. Thirty-first meeting, Montreal, 1-5 August 2011. Item 5 of the provisional agenda. Proposed Amendment to the Montreal Protocol. Joint proposal submitted by Canada, Mexico, and the United States of America to amend the Montreal Protocol in respect of hydrofluorocarbon phase-down.

(Commonly referred to as the NA proposal). Available at: http://conf.montreal-protocol.org/meeting/31oewg/pre-session-documents/PreSession%20Documents/OEWG-31-5E.pdf (accessed 19 April 2012).

This page intentionally left blank.

8. Glossary of Terms, Abbreviations, and Symbols

AB	Assembly Bill
AB 32	(Assembly Bill 32) California Global Warming Solutions Act of 2006
AC	Air conditioner, or air-conditioning
AHRI	Air-Conditioning, Heating, and Refrigeration Institute
AR4	Fourth Assessment Report (of the Intergovernmental Panel on Climate Change)
ARB	(California) Air Resources Board
ARMINES	Collaboration of academia, industry, and government for research related to a wide variety of engineering and scientific topics; associated with the MINES great schools of Paris
ASHRAE	American Society of Heating, Refrigerating and Air-Conditioning Engineers
ASME	American Society of Mechanical Engineers
BAU	Business as usual
B/C	Benefit to cost ratio
Btu	British thermal unit, the amount of heat that will raise the temperature of one pound of water by one degree Fahrenheit
CASE	Codes and Standards Enhancement
CEC	California Energy Commission
CFC	Chlorofluorocarbon
CO2	Carbon dioxide
CTZ	Climate zone
CTZ01	Climate zone 1 - Arcata
CTZ03	Climate zone 3 - Oakland
CTZ05	Climate zone 5 - Santa Maria
CTZ07	Climate zone 7 - San Diego (Lindbergh)
CTZ08	Climate zone 8 - Fullerton
CTZ10	Climate zone 10 - Riverside
CTZ12	Climate zone 12 - Sacramento (Sacramento Executive Airport)
CTZ13	Climate zone 13 - Fresno
CTZ14	Climate zone 14 - Palmdale
CTZ15	Climate zone 15 - Palm Springs
DOE	(United States) Department of Energy
DOE 2.2R	Department of Energy, energy simulation software, version 2.2R
DX	Direct expansion (refrigeration system)
ECM	Energy conservation measure

EER	Energy efficiency ratio`
EUL	Effective useful life
EPA	(United States) Environmental Protection Agency
GHG	Greenhouse gas
GWP	Global warming potential
HCFC	Hydrochlorofluorocarbon
HFC	Hydrofluorocarbon
HVAC	Heating, ventilation, and air-conditioning
ICF	ICF International, research contractor
IOR	Institute of Refrigeration (Great Britain)
IPCC	Intergovernmental Panel on Climate Change
IPCC/TEAP	Intergovernmental Panel on Climate Change Technology and Assessment Panel
ISOR	Initial Statement of Reasons (for proposed regulation)
kW	Kilowatt
kWh	Kilowatt-Hour
LAC	Supermarket type: large (big box), air-cooled condenser, central compressor
LAD	Supermarket type: large (big box), air-cooled condenser, distributed compressor
Lbs.	Pounds
LEC	Supermarket type: large (big box), evaporative-cooled condenser, central compressor
LED	Light-emitting diode
LFC	Supermarket type: large (big box), water-cooled condenser, central compressor
LFD	Supermarket type: large (big box), water-cooled condenser, distributed compressor
LRM	Leak reduction measure
LSHX	Liquid suction heat exchanger
LT	Low-temperature
MAC	Supermarket type: medium, air-cooled condenser, central compressor
MAD	Supermarket type: medium, air-cooled condenser, distributed compressor
MBH	Thousand British thermal units per hour
MEC	Supermarket type: medium, evaporative-cooled condenser, central compressor
MFC	Supermarket type: medium, water-cooled condenser, central compressor

MFD	Supermarket type: medium, water-cooled condenser, distributed compressor
MMBtu	Million British thermal units
MMTCO2E	Million metric tons of carbon dioxide equivalent
MMTCO2eq	Million metric tons of carbon dioxide equivalent
MT	Medium-temperature
MT	Metric ton (1,000 kilograms)
MTCO2E	Metric ton of carbon dioxide equivalent
MTCO2eq	Metric ton of carbon dioxide equivalent
NAICS	North American Industry Classification System
ODS	Ozone depleting substance
PG&E	Pacific Gas and Electric
PIER	Public Interest Energy Research Program
R-404A	Refrigerant 404A, a blend of hydrofluorocarbons R-143a (52 wt.%), R-125 (44 wt.%), and R-134a (4 wt.%).
R-507	Refrigerant 507A, a blend of hydrofluorocarbons R-143a (50 wt.%), and R-125 (50 wt.%).
RAD	Responsible Appliance Disposal (U.S. EPA program)
RGT	Return gas temperature
RMP	Refrigerant Management Program (of the California Air Resources Board)
RTOC	Refrigeration, Air Conditioning, and Heat Pumps Technical Options Committee
SAC	Supermarket type: small, air-cooled condenser, central compressor
SAD	Supermarket type: small, air-cooled condenser, distributed compressor
SBD	Savings By Design
SCAQMD	South Coast Air Quality Management District
SCE	Southern California Edison
SCT	Saturated condensing temperature
SDG&E	San Diego Gas and Electric
SEC	Supermarket type: small, evaporative-cooled condenser, central compressor
SET	Saturated evaporating temperature
SF	Square foot
SFC	Supermarket type: small, water-cooled condenser, central compressor
SFD	Supermarket type: small, water-cooled condenser, distributed compressor
SST	Saturated suction temperature

TD	Temperature difference between saturated condensing and design dry bulb temperature
TDV	Time-dependent valuation
TEAP	Technology and Economic Assessment Panel
THR	Total heat of rejection
Title 24	The California Building Code
TEWI	Total equivalent warming impact
Therm	A unit of heat equal to 100,000 British thermal units (Btu)
TXV	Thermostatic expansion valve
UNEP	United Nations Environment Programme
U.S. EPA	United States Environmental Protection Agency
W	Watt
WBT	Wet-bulb temperature

Appendix A

Additional Options to Reduce Supermarket GHG Emissions from Refrigerant Usage

The leak reduction measures presented in this research report are a cost-effective means of reducing the GHG emissions from refrigerant systems used in supermarkets. Although beyond the scope of work of this research, additional approaches to reducing supermarket GHG emissions are summarized below, and include:

1) Use of lower-GWP refrigerants
2) Reduction of refrigerant charge per unit of cooling capacity
3) Recovery of refrigerant during service and end-of-life
4) Inspection and maintenance program to identify and repair leaks quickly

Approach #1: Use of lower-GWP refrigerant. A cost-benefit analysis of this approach is beyond the scope of this research project. A major reason that low-GWP refrigerant use has not been recommended for inclusion into Title 24 Building Code standards is that there is no current authority for the state of California or the U.S. Federal Government to limit the use of high-GWP refrigerants such as HFCs that are not ozone-depleting substances. A phase-out of HFCs had been included in the American Clean Energy and Security Act of 2009 (Waxman-Markey climate bill), but the bill was not passed by the Senate (govtrack, 2012). Additionally, a phasedown of HFC production has been recommended for inclusion into the Montreal Protocol (UNEP, 2011); however, as of May 2012, no HFC production or use phasedown has been agreed upon at the state, national, or international level.

However, it is apparent that if a low-GWP refrigerant such as carbon dioxide (CO_2) were used, with a GWP of 1, the GHG impact of CO_2 refrigerant releases would be insignificant compared to currently used HFC refrigerants. More than 3,000 lbs. of CO_2 refrigerant would have to be leaked before it equaled the warming impact of just one pound of R-404A (GWP of 3900).

Approach #2: Reduction of refrigerant charge per unit of cooling capacity. This approach could reduce refrigerant emissions for the simple reason that there is less refrigerant available to be emitted. An analysis of refrigeration system charge size indicates that since 2000, there has been a pronounced trend towards facilities using smaller charge sizes among several distributed systems as opposed to a very large charge size in one centralized system (ARB, 2009). One example of reducing the (high-GWP) refrigerant charge per unit of cooling capacity is to use a smaller central self-contained refrigeration system with a high-GWP refrigerant to cool a low-GWP secondary heat transfer fluid such as glycol or CO_2. The heat transfer fluid in the “secondary loop” flows outwards from the self-contained system to be used in various parts of the facility. The net effect of secondary cooling loops is to reduce the high-GWP refrigerant charge significantly—up to 10 times in many cases (CEC PIER, 2004). Secondary cooling systems are also known as indirect or cascade cooling systems. GHG reductions by using

secondary cooling loops are addressed more thoroughly in the Codes and Standards Enhancement (CASE) section of this report.

Approach #3: Recovery of refrigerant during service and end-of-life. Recovery of ODS and HFC refrigerant during equipment service and at the equipment's end-of-life is a current requirement of Federal regulations, and is further reinforced through the ARB refrigerant regulations. The cost and benefit of commercial facilities adhering to the refrigerant recovery regulations has previously been addressed in the ARB-sponsored study "Lifecycle Analysis of High-Global Warming Potential Greenhouse Gas Destruction" (ICF, 2011).

Approach #4: Inspection and maintenance program to identify and repair leaks quickly. This approach is currently being implemented by California under the ARB Refrigerant Management Program, which requires large commercial refrigeration system operators to employ best management practices for refrigeration equipment inspection, maintenance, and leak repair. Additional details on this program are at the ARB website at: http://www.arb.ca.gov/cc/reftrack/reftrack.htm. Note that the requirements of the ARB Refrigerant Management Program do not duplicate any of the recommended leak reduction measures in this study; the leak reduction measures are intended to be made at the time of system design and installation, whereas the refrigerant management program covers leak inspection and repair of existing systems (i.e., during system operation).

Appendix B

Codes and Standards Enhancement Initiative (CASE) Supermarket Refrigeration

Please note that the Appendix B "Codes and Standards Enhancement Initiative (CASE) – Supermarket Refrigeration" was originally published October 2011 as a stand-alone document for the California Building Code Title 24, Part 6 (Energy Conservation) for the 2013 revisions to the California Building Energy Efficiency Standards. To preserve the continuity of the report, the original page numbering is used.

As part of the CARB contract 09-306 (the main report previously presented), the contractor ICF International assisted with portions of the CASE report. However, the majority of work on the CASE report was completed by VaCom Technologies the Heschong Mahone Group, and McHugh Energy, prepared by the California Statewide Utility Codes and Standards Program, and funded by the California utility customers under the auspices of the California Public Utilities Commission. Funding utilities include Pacific Gas and Electric Company (PG&E), Southern California Edison, Southern California Gas Company (SoCalGas), and San Diego Gas and Electric (SDG&E).

The entire CASE report is presented here for reference and completeness, and the October 2011 version attached here may be subject to change until the Title 24 codes are updated for the 2013 revisions, anticipated by January 2013.

This page intentionally left blank.

CODES AND STANDARDS ENHANCEMENT INITIATIVE (CASE)

Supermarket Refrigeration

2013 California Building Energy Efficiency Standards

California Utilities Statewide Codes and Standards Team, October, 2011

This report was prepared by the California Statewide Utility Codes and Standards Program and funded by the California utility customers under the auspices of the California Public Utilities Commission.

Copyright 2011 Pacific Gas and Electric Company, Southern California Edison, SoCalGas, SDG&E.

All rights reserved, except that this document may be used, copied, and distributed without modification.

Neither PG&E, SCE, SoCalGas, SDG&E, nor any of its employees makes any warranty, express of implied; or assumes any legal liability or responsibility for the accuracy, completeness or usefulness of any data, information, method, product, policy or process disclosed in this document; or represents that its use will not infringe any privately-owned rights including, but not limited to, patents, trademarks or copyrights

Table of Contents

CODES AND STANDARDS ENHANCEMENT INITIATIVE (CASE) 1
1. Purpose 9
2. Overview 11
3. Methodology 20
3.1 Supermarket Prototype Definitions 20
3.2 Energy Analysis and Cost Effectiveness Methodology 21
3.3 Statewide Energy Savings Estimate 22
3.4 Direct Refrigerant Emissions Calculations 23
3.4.1 Base case refrigerant charge description 23
3.4.2 Direct emissions methodology 24
3.5 Acceptance Testing 25
3.6 Stakeholder Meeting Process 25
4. Analysis and Results 26
4.1 Floating Head Pressure 27
4.1.1 Analysis results by climate zone 28
4.2 Condenser Specific Efficiency 31
4.2.1 Incremental analysis results 34
4.2.2 Analysis of results by climate zone 35
4.3 Floating Suction Pressure 37
4.3.1 Analysis results by climate zone 38
4.4 Mechanical Subcooling 39
4.4.1 Analysis results by climate zone 40
4.5 Display Case Lighting Control 41
4.5.1 Analysis results by climate zone 41
4.6 Prohibit Open Upright Frozen Food Cases 42
4.7 Refrigeration Heat Recovery 43
4.8 CO_2 Secondary (indirect) or Cascade Cooling 48
4.8.1 Analysis Results 48
4.8.2 Use of Glycol for MT Systems as an Exception to CO_2 50
4.9 Statewide Energy Savings Estimates 51
4.10 Equipment Rating Accuracy, Standards and Certification 53

5. Recommended Code Language 55
5.1 Title 24 Draft Code Language 55
6. Appendix A: Rejected Measures 59
6.1 Evaporator Coil Specific Efficiency 59
6.2 Display Case LED Lights 59
6.3 Night Covers on Open Display Cases 60
6.4 Prohibit Gas Defrost 60
6.5 Walk-in Variable Speed Fan Control 61
6.5.1 Analysis results by climate zone 62
6.5.2 Industry concerns regarding sufficient airflow and product quality 63
6.6 Liquid-Suction Heat Exchangers 63
6.6.1 Analysis results by climate zone 64
7. Appendix B: System Schematics 72
8. Appendix C: Base Case Facility Descriptions 86
9. Appendix D: Refrigeration Schedules and Equipment Sizing 95
9.1 Refrigeration Schedules 95
9.2 Equipment Sizing per Climate Zone 97
10. Appendix E: Charge Size and Leak Rate Assumptions for Direct Emissions 99
10.1 Summary of Information Obtained on Charge Size and Leak Rates 99
10.2 Methodology for Developing Charge Size Assumptions 103
10.2.1 DX Systems 104
10.2.2 Distributed and Secondary Loop Systems 104
10.2.3 Impact of the Condenser Type 105
10.3 Methodology for Developing Leak Rate Assumptions 105
10.4 Limitations and Considerations 106
11. Appendix F: Wetbulb Sensitivity Study for Floating Head Pressure Measure ... 107
12. Appendix G: Databases from Savings By Design 108
12.1 Condenser Specific Efficiency 108
13. Appendix H: Energy Analysis for CO_2 Secondary Systems 113
13.1 Glycol Indirect System Analysis 115
14. Appendix I: Full Cost Results 118
14.1 Floating Head Pressure 118
14.2 Condenser Specific Efficiency 122

14.3 Floating Suction Pressure 125
14.4 Mechanical Subcooling 129
14.5 Display Case Lighting Control 133
14.6 Refrigeration Heat Recovery 137
15. Appendix J: Acronym List and Glossary 143
16. Appendix K: Nonresidential Construction Forecast 148

TABLE OF FIGURES

Figure 1: Prototype supermarket summary 20
Figure 2: Size and system description for analysis prototypes 21
Figure 3: 2014 Supermarket New Construction in CA Climate Zones 23
Figure 4: Base case charge size and leak rate assumptions 24
Figure 5: Legend for analysis results tables 26
Figure 6: Summary of ambient following control TDs for SCT control measure 28
Figure 7: Energy analysis results for floating head pressure measure 29
Figure 8: Refrigerant analysis results for floating head pressure measure 29
Figure 9: GHG analysis results for floating head pressure measure 30
Figure 10: Cost savings results for floating head pressure measure 31
Figure 11: Condenser description for specific efficiency measure 31
Figure 12: Example normalized condenser capacity and power versus normalized speed 32
Figure 13: Condenser cost versus MBH capacity at specific-efficiency rating conditions 33
Figure 14 Example of increasing condenser size and resultant specific efficiency 34
Figure 15: System energy usage and TDV energy cost versus specific efficiency 34
Figure 16: Preliminary condenser specific efficiency results 35
Figure 17: Energy analysis summary for condenser specific efficiency measure by climate zone 36
Figure 18: Analysis results for prototypes, system configurations, and condenser types with Benefit/Cost ratios less than 1 37
Figure 19: Suction group design SST and Base Case SST setpoints 38
Figure 20: Savings results for floating suction pressure by climate zone 39
Figure 21: Statewide savings results for mechanical subcooling measure 41
Figure 22: Statewide savings results for display case lighting control measure 42
Figure 23: Analysis assumptions for both open and reach-in display cases 42
Figure 24: Analysis results for reach-in versus open upright frozen food cases 43
Figure 25: Simulation assumptions for heat reclaim measure 44
Figure 26: Energy savings results for heat recovery measure by climate zone 45
Figure 27: Refrigerant analysis results for heat recovery measure 45
Figure 28: GHG analysis results for heat recovery measure 46
Figure 29: Cost savings results for heat recovery measure 47
Figure 30: Heat recovery cost savings results for CTZ15 – Palm Springs 48

Figure 31: Carbon savings results for indirect cooling measure 49
Figure 32: GHG analysis results for indirect cooling measure 49
Figure 33: Cost savings results for indirect cooling measure 49
Figure 34: Cost savings results for indirect measure with glycol 50
Figure 35: Annual Statewide Energy Savings – Small Supermarket Prototype 51
Figure 36: Annual Statewide Energy Savings – Large Supermarket Store 52
Figure 37: Annual Statewide Energy Savings – Big Box Food Store 53
Figure 38: Annual Statewide Energy Savings – All Average of Prototypes 53
Figure 38: Annual Statewide Energy Savings by Measures 53
Figure 39: Sacramento GHG savings results for no hot gas defrost 60
Figure 40: Sacramento cost savings analysis results for no hot gas defrost 61
Figure 41: Statewide savings results for walk-in variable-speed fan control measure 62
Figure 42: Suction line heat gain assumptions (MT systems) 64
Figure 43: Suction line heat gain assumptions (LT systems) 64
Figure 44: LSHX sizing assumptions for cost and performance 64
Figure 45: Statewide savings analysis for liquid-suction heat exchangers (MT Walk-Ins) 65
Figure 46: Statewide savings analysis for liquid-suction heat exchangers (LT Walk-Ins) 66
Figure 47: Statewide savings analysis for liquid-suction heat exchangers (MT display cases) 67
Figure 48: Statewide savings analysis for liquid-suction heat exchangers (LT display cases) 67
Figure 49: MT walk-in LSHX simulations with BC less than 1.0 68
Figure 50: MT LSHX results by walk-in with results and BCR on a per-SF basis 71
Figure 51: Liquid subcooling for R-404A, R-507, R-407A, and R-410A with equal-sized LSHXs ... 71
Figure 52: Small supermarket with central parallel rack compressor system and air-cooled condensers (SAC) 72
Figure 53: Small supermarket with distributed compressor systems and air-cooled condensers (SAD) 73
Figure 54: Small supermarket with central parallel rack compressor system and evaporative-cooled condensers (SEC) 74
Figure 55: Small supermarket with central parallel rack compressor system and water-cooled condensers served by a central evaporative-cooled fluid cooler (SFC) 74
Figure 56: Small supermarket with distributed compressor systems and water-cooled condensers served by a central evaporative-cooled fluid cooler (SFD) 75
Figure 57: Large supermarket with central parallel rack compressor configuration and air-cooled condensers (MAC) 76

Figure 58: Large supermarket with distributed compressor systems and air-cooled condensers (MAD) 77
Figure 59: Large supermarket with central parallel rack compressor system and evaporative-cooled condensers (MEC) 78
Figure 60: Large supermarket with central parallel rack compressor system and water-cooled condensers served by a central evaporative-cooled fluid cooler (MFC) 79
Figure 61: Large supermarket with distributed compressor systems and water-cooled condensers served by a central evaporative-cooled fluid cooler (MFD) 80
Figure 62: Big-box store with central parallel rack compressor system and air-cooled condensers (LAC) 81
Figure 63: Big-box food store with distributed compressor systems and air-cooled condensers (LAD) 82
Figure 64: Big-box store with central parallel compressors and evaporative condenser (LEC) 83
Figure 65: Big-box food store with central parallel rack compressor system and water-cooled condensers served by a central evaporative-cooled fluid cooler (LFC) 84
Figure 66: Large supermarket with distributed compressor systems and water-cooled condensers served by a central evaporative-cooled fluid cooler (MFD) 85
Figure 67: Small supermarket refrigeration schedule 95
Figure 68: Large supermarket refrigeration schedule 96
Figure 69: Big-box store refrigeration schedule 97
Figure 70: Description of two design climate zones 98
Figure 71: TD Sensitivity Analysis 107
Figure 72: Air-cooled axial-fan halocarbon condenser database 110
Figure 73: Centrifugal fan evaporative-cooled halocarbon condenser database 112
Figure 74: Indirect system diagram 113
Figure 75: Analysis assumptions for CO_2 indirect system analysis 114
Figure 76: Energy analysis results for CO_2 indirect system measure 115
Figure 77: Glycol indirect loop assumptions 116
Figure 78: Assumed required glycol flowrate for MT indirect system 116
Figure 79: Energy analysis results for glycol indirect system measure 117

1. Purpose

This document is a report of a proposed addition to the energy-efficiency standards outlined in Section 6 of California's Title 24 building code to include supermarket refrigeration systems. Measures to reduce energy consumption in supermarket refrigeration systems were evaluated. A concurrent study of refrigerant charge and leak rates was conducted to assess the direct greenhouse gas (GHG) impacts (i.e., refrigerant emissions) of centralized direct expansion (DX) systems, distributed systems, and secondary loop systems. To be considered for inclusion in the Title 24 standards, measures must be both cost-effective as well as readily available in the market at the time that the code becomes effective.

Supermarkets, for the purposes of this report, include retail food stores from 8,000 square feet (considered the minimum size of a specialty or small neighborhood market) to over 150,000 square feet for "big box" stores that include a compete food store. Supermarket refrigeration systems serve refrigerated display case merchandisers, and walk-in coolers and freezers used for storage. Large "point of sale" boxes equipped with reach-in doors, or refrigerated spaces configured to allow customers to walk through, are also often included in "big box" store designs. Refrigeration systems for these stores typically consist of several groups of multiple hermetic or semi-hermetic compressors manifolded together. These compressor systems or "parallel racks" are commonly located indoors and connected to separate remote condensers, but may also be physically packaged along with a condenser (called a "condensing unit") for smaller stores, or as distributed units in large stores.

Many of the energy savings measures evaluated in this report have an established history in California and are employed in the majority of new supermarkets.

The measures analyzed in this report include:

1. Floating head pressure
2. Condenser specific efficiency
3. Floating suction pressure
4. Mechanical subcooling
5. Display case lighting control
6. Refrigeration heat recovery
7. Prohibit open upright frozen food cases
8. CO_2 secondary (indirect) or cascade cooling

The study work for this report included: research of supermarket energy efficiency measures, data mining from Savings By Design (SBD) new construction energy efficiency projects, equipment research, interviews with equipment manufacturers, contractors, and supermarket operators, and detailed energy modeling and economic analysis.

Recognizing that some energy efficiency measures may have adverse impacts on refrigerant charge size and/or leak rates, which may in turn lead to increased emissions of high-global warming potential (GWP) refrigerants—such as HFC-404A and HFC-507—this analysis considers not just the potential energy savings associated with each measure, but the *net* greenhouse gas impacts associated with both energy consumption and refrigerant emissions. In particular, the net climate impacts are quantitatively assessed for two measures—heat recovery and floating head pressure—to ensure that the measures achieve an overall cost savings over the lifetime of the equipment. A methodology for calculating energy reduction in units of equivalent tons of emitted CO_2, as well as equivalent

monetized value per emitted ton of CO_2 in present-value dollars, was developed by the California Energy Commission (CEC) for the purpose of economic analysis of these measures. Moreover, to promote the reduction of overall GHG emissions, one measure known to reduce annual refrigerant losses at the expense of higher energy consumption—secondary (indirect) cooling—is also assessed in this analysis in terms of both direct (energy consumption) and indirect (GHG emission) impacts using the methodology developed by the CEC.

2. Overview

a. Measure Title	Supermarket Refrigeration Energy Efficiency CASE Study
b. Description	<u>Title 24 Part 6 Measures:</u> Floating head pressure – require controls to float refrigeration system saturated condensing temperature (SCT) to 70°F during low-ambient temperature conditions, with ambient-following control logic and variable speed condenser fans Condenser specific efficiency – require a maximum fan power per unit of capacity on air-cooled and evaporative-cooled refrigerant condensers Floating suction pressure – require controls to reset refrigeration system target suction temperature based on refrigerated display case or walk-in temperature, rather than operating at a fixed suction temperature setpoint Mechanical subcooling – require liquid refrigerant to be subcooled to 50°F or less for low-temperature loads Display case lighting control – require automatic controls to turn off display case lights during non-business hours Prohibit open upright frozen food cases Refrigeration heat recovery – require equipment and controls to utilize rejected heat from refrigeration system(s) for space heating, with a limited increase in refrigerant charge <u>Title 24 Part 11 (Reach) Code Measures</u> CO_2 secondary (indirect) or cascade cooling – require that refrigerated display cases and walk-in coolers and freezers utilize carbon dioxide (CO_2) as the heat-transfer fluid or as the low-side refrigerant in a cascaded system to reduce HFC refrigerant charge
c. Type of Change	The proposed code changes are mandatory code requirements in Title 24 Part 6 or Title 24 Part 11 (Reach) Codes.

d. Energy Benefits

Values in the summary table below are weighted for different supermarket building prototypes. Analysis on these measures' incremental savings is presented in Section 4. Note that the CO_2 secondary (indirect) or cascade cooling measure is considered to be energy-neutral, based on DOE2 simulation and industry research, but is being considered for inclusion in the standards based on the overall GHG reductions that may result from lower HFC refrigerant charge.

	Energy Savings		Demand Savings		Natural Gas Savings		TDV Energy Savings	
	kWh	**kWh/SF**	**kW**	**W/SF**	**Therms**	**Therms/SF**	**MMBtu**	**MMBtu/SF**
CTZ01 - Arcata								
Floating Head Pressure	91,871	1.49	8.5	0.537	0	0.00	1,859,180	30.33
Condenser Specific Efficiency	1,507	0.03	0.6	0.011	0	0.00	37,680	0.69
Floating Suction Pressure	28,549	0.44	4.4	0.064	0	0.00	614,500	9.45
Mechanical Subcooling	28,837	0.41	5.4	0.067	0	0.00	614,273	8.67
Display Case Lighting Control	121,760	2.20	0.6	0.011	0	0.00	2,047,613	35.84
Heat Reclaim	-53,400	-0.78	-2.0	-0.032	43,977	0.69	8,671,683	99.56
CTZ03 - Oakland								
Floating Head Pressure	81,873	1.34	2.7	0.173	0	0.00	1,669,053	27.43
Condenser Specific Efficiency	2,181	0.04	3.7	0.068	0	0.00	62,173	1.15
Floating Suction Pressure	29,510	0.45	4.3	0.066	0	0.00	641,273	9.82
Mechanical Subcooling	29,735	0.42	6.9	0.093	0	0.00	656,960	9.15
Display Case Lighting Control	122,526	2.21	0.7	0.007	0	0.00	2,038,887	35.65
Heat Reclaim	-48,367	-0.70	-1.0	-0.011	31,436	0.50	6,130,635	71.37
CTZ05 - Santa Maria								
Floating Head Pressure	84,642	1.39	7.2	0.456	0	0.00	1,729,287	28.46
Condenser Specific Efficiency	2,438	0.04	2.0	0.035	0	0.00	54,817	1.00
Floating Suction Pressure	29,299	0.45	4.5	0.067	0	0.00	636,593	9.76
Mechanical Subcooling	29,532	0.42	6.0	0.081	0	0.00	644,013	8.98
Display Case Lighting Control	122,016	2.20	0.8	0.007	0	0.00	2,048,813	35.77
Heat Reclaim	-49,166	-0.71	-2.8	-0.024	33,001	0.53	6,385,425	73.99
CTZ07 - San Diego (Lindbergh Field)								
Floating Head Pressure	68,631	1.16	1.4	0.087	0	0.00	1,471,913	24.81
Condenser Specific Efficiency	2,937	0.05	4.4	0.073	0	0.00	74,007	1.36
Floating Suction Pressure	29,996	0.46	4.1	0.061	0	0.00	651,853	10.01
Mechanical Subcooling	31,193	0.44	7.8	0.114	0	0.00	698,600	9.74
Display Case Lighting Control	125,402	2.26	0.7	0.007	0	0.00	2,125,340	36.99
Heat Reclaim	-41,375	-0.59	-0.3	0.012	17,696	0.31	3,195,500	42.07

	Energy Savings		Demand Savings		Natural Gas Savings		TDV Energy Savings	
	kWh	**kWh/SF**	**kW**	**W/SF**	**Therms**	**Therms/SF**	**MMBtu**	**MMBtu/SF**
CTZ08 - Fullerton								
Floating Head Pressure	75,743	1.27	4.5	0.286	0	0.00	1,688,900	35.16
Condenser Specific Efficiency	3,268	0.06	4.8	0.078	0	0.00	117,667	2.08
Floating Suction Pressure	30,339	0.46	5.2	0.086	0	0.00	659,573	9.99
Mechanical Subcooling	32,359	0.46	10.0	0.163	0	0.00	745,553	10.63
Display Case Lighting Control	124,593	2.24	0.8	0.009	0	0.00	2,072,240	36.05
Heat Reclaim	-46,948	-0.73	-1.8	-0.038	16,646	0.32	2,884,310	41.91
CTZ10 - Riverside								
Floating Head Pressure	79,688	1.31	2.1	0.131	0	0.00	1,481,713	24.33
Condenser Specific Efficiency	5,353	0.09	4.8	0.079	0	0.00	214,727	3.62
Floating Suction Pressure	31,196	0.47	5.6	0.089	0	0.00	688,133	10.41
Mechanical Subcooling	34,136	0.48	13.1	0.191	0	0.00	835,160	11.52
Display Case Lighting Control	124,596	2.24	0.8	0.011	0	0.00	2,047,487	35.67
Heat Reclaim	-49,868	-0.75	-1.5	-0.037	16,704	0.28	2,892,648	34.62
CTZ12 – Sacramento (Sacramento Executive Airport)								
Floating Head Pressure	83,625	1.37	1.7	0.110	0	0.00	1,572,613	25.78
Condenser Specific Efficiency	4,540	0.08	4.8	0.079	0	0.00	196,560	3.31
Floating Suction Pressure	30,864	0.47	5.8	0.096	0	0.00	690,573	10.47
Mechanical Subcooling	33,135	0.46	11.9	0.182	0	0.00	809,860	11.20
Display Case Lighting Control	123,529	2.22	0.5	0.007	0	0.00	2,068,500	36.07
Heat Reclaim	-53,112	-0.80	-4.1	-0.050	23,756	0.39	4,484,329	52.52
CTZ13 - Fresno								
Floating Head Pressure	80,300	1.32	1.8	0.111	0	0.00	1,501,767	24.66
Condenser Specific Efficiency	6,692	0.11	4.9	0.080	0	0.00	245,087	4.09
Floating Suction Pressure	31,935	0.49	5.9	0.095	0	0.00	714,173	10.82
Mechanical Subcooling	35,542	0.49	12.5	0.188	0	0.00	876,007	12.09
Display Case Lighting Control	125,199	2.26	0.8	0.009	0	0.00	2,105,827	37.00
Heat Reclaim	-50,693	-0.77	-3.2	-0.034	19,960	0.33	3,725,403	43.80

	Energy Savings		Demand Savings		Natural Gas Savings		TDV Energy Savings	
	kWh	**kWh/SF**	**kW**	**W/SF**	**Therms**	**Therms/SF**	**MMBtu**	**MMBtu/SF**
CTZ14 - Palmdale								
Floating Head Pressure	90,771	1.47	0.7	0.045	0	0.00	1,648,873	26.77
Condenser Specific Efficiency	6,629	0.11	4.9	0.081	0	0.00	243,767	4.07
Floating Suction Pressure	31,286	0.47	5.9	0.096	0	0.00	695,327	10.47
Mechanical Subcooling	34,923	0.48	11.8	0.176	0	0.00	846,867	11.64
Display Case Lighting Control	124,213	2.24	0.8	0.009	0	0.00	2,049,980	35.90
Heat Reclaim	-56,213	-0.86	-3.8	-0.043	21,598	0.35	4,030,393	46.84
CTZ15 - Palm Springs								
Floating Head Pressure	69,697	1.13	0.7	0.044	0	0.00	1,277,240	20.77
Condenser Specific Efficiency	13,409	0.23	5.0	0.082	0	0.00	375,240	6.23
Floating Suction Pressure	35,156	0.53	7.4	0.117	0	0.00	786,493	11.86
Mechanical Subcooling	45,087	0.62	17.5	0.265	0	0.00	1,134,920	15.69
Display Case Lighting Control	128,513	2.31	1.1	0.011	0	0.00	2,155,000	37.71
Heat Reclaim	-43,199	-0.67	-3.1	-0.040	6,096	0.11	505,212	7.61

The statewide savings for each of the proposed measures and the total annual statewide savings are:

Measure	Energy Savings (GWh)	Gas Savings (MMT)
Floating Head Pressure	6.50	--
Condenser Specific Efficiency	0.35	--
Floating Suction Pressure	2.30	--
Mechanical Subcooling	2.08	--
Display Case Lighting Control	10.11	--
Refrigeration Heat Recovery	(3.32)	1.89
Total	18.02	1.89

For description of prototype buildings and weighting refer to Section 3 and Section 4.

e. Non-Energy Benefits	Non-energy benefits associated with improved supermarket refrigeration system energy efficiency include increased equipment reliability and stored product security. The floating head pressure measure reduces the average operating pressures and temperatures, reducing stress on compressors, condensers, piping, and associated equipment.
f. Environmental Impact	The proposed supermarket refrigeration measures have little statewide change in water consumption or water quality. The floating head pressure measure includes variable-speed condenser fan control. Variable-speed control is achievable by providing a speed-control signal to existing

electronically-commutated (EC, also known as Brushless DC) fan motors, which would not increase material usage. Variable-speed drives can also be employed, which would have a consequent increase in materials.

The condenser specific efficiency measure in some instances may be achieved with larger condenser surface, in others with more efficient motors, or improved technology. A larger condenser surface potentially results in increased material usage. However, in the case of air-cooled condensers, a rapidly increasing use of micro-channel condenser surface provides higher specific efficiency while potentially *reducing* materials and weight.

The refrigeration heat reclaim measure will require a heat reclaim coil, increasing material usage.

Two energy efficiency measures are expected to impact refrigerant charge size and/or leak rates, thereby impacting the refrigeration system's annual emissions of high-global warming potential (GWP) refrigerants. Analyses were undertaken to quantify these impacts. Measures that are expected to impact refrigerant charge size and/or leak rates are:

- Floating head pressure
- Refrigeration heat recovery

Expected material increase for each measure is presented below. Units are lbs/SF of prototype floor area.

	Mercury	Lead	Copper	Steel	Plastic	Others (Aluminum)	Others (R-404A Refrigerant)
Floating head pressure	NC	NC	Small: 0.00020 Large: 0.00003 Big Box: 0.00013	Small: 0.00010 Large: 0.00002 Big Box: 0.00001	NC	Small: 0.00010 Large: 0.00002 Big Box: 0.00001	Small: 0.00019 Large: 0.00016 Big Box: 0.00008
Condenser specific efficiency	NC	NC	Small: 0.00089 Large: 0.00015 Big Box: 0.00008	Small: 0.00089 Large: 0.00015 Big Box: 0.00008	NC	Small: 0.00089 Large: 0.00015 Big Box: 0.00008	Small: 0.00015 Large: 0.00005 Big Box: 0.00003
Floating suction pressure	NC	NC	NC	NC	NC	NC	NC
Mechanical subcooling	NC	NC	NC	NC	NC	NC	NC
Display case lighting control	NC	NC	NC	NC	NC	NC	NC
Refrigeration heat recovery	NC	NC	Small: 0.00447 Large: 0.00459 BigBox: 0.00394	NC	NC	Small: 0.00447 Large: 0.00459 BigBox: 0.00394	Small: 0.00168 Large: 0.00085 BigBox: 0.00057
Prohibit open upright frozen food cases	NC	NC	NC	NC	NC	NC	NC

g. Technology Measures

Measure Availability:

- <u>CO_2 Secondary (indirect) or cascade cooling:</u> secondary systems with CO_2 as the secondary medium are already common in Europe and are gaining popularity in the United States. Manufacturers are beginning to offer refrigeration equipment

	that is CO_2-compatible. Other measures have a long history in California supermarkets and are already available. **Useful Life, Persistence, and Maintenance:** The effective useful life (EUL) of all supermarket refrigeration measures is 15 years. Supermarkets are frequently remodeled, as often as every 7-10 years, but the mechanical systems are commonly adapted and re-used through one or more remodel cycles. Persistence of savings for control measures, including floating head pressure, floating suction pressure and display case lighting control can be as little as a few years. Sensors may drift or service contractors may bypass efficiency controls or change settings. Persistence can be improved by initial commissioning, automated setpoint verification and through routine maintenance and/or periodic re-commissioning. Many supermarket chains and companies serving this sector now utilize the computerized supermarket control systems, used in virtually every store, to effect automated monitoring of setpoints and system operation, potentially delivery very high certainty of savings over time.
h. Performance Verification of the Proposed Measure	Mandatory acceptance test procedures for supermarket refrigeration control-related measures will be developed, including: • Floating head pressure • Floating suction pressure • Mechanical subcooling • Display case lighting control • Refrigeration heat recovery

i. Cost Effectiveness

Life-cycle cost analysis results for the cost-effective measures are presented below. The analysis for the CO_2 secondary (indirect) or cascade cooling measure is presented separately, as the results for that measure do not vary significantly by climate zone.

	Measure Cost		Maintenance Cost		TDV Cost Savings		Refrigerant Cost		Life Cycle Cost	
	($)	($/SF)	($)	($/SF)	($)	($/SF)	($)	($/SF)	($)	($/SF)
CTZ01 – Arcata										
Floating Head Pressure	$17,002	$0.215	$12,535	$0.158	$165,461	$2.70	$4,917	$0.007	-$131,007	-$2.05
Condenser Specific Efficiency	$3,571	$0.045	$0	$0.000	$3,353	$0.06	$0	$0.000	$218	$0.00
Floating Suction Pressure	$2,489	$0.031	$5,969	$0.075	$54,689	$0.84	$0	$0.000	-$46,231	-$0.58
Mechanical Subcooling	$4,114	$0.052	$4,775	$0.060	$54,668	$0.77	$0	$0.000	-$45,779	-$0.58
Display Case Lighting Control	$4,683	$0.059	$5,173	$0.065	$182,231	$3.19	$0	$0.000	-$172,375	-$2.18
Heat Reclaim	$40,954	$0.517	$19,101	$0.241	$771,752	$12.35	$37,708	$0.057	-$673,989	-$10.73
CTZ03 – Oakland										
Floating Head Pressure	$17,002	$0.215	$12,535	$0.158	$148,540	$2.44	$4,917	$0.007	-$114,086	-$1.79
Condenser Specific Efficiency	$3,571	$0.045	$0	$0.000	$5,533	$0.10	$0	$0.000	-$1,962	-$0.02
Floating Suction Pressure	$2,489	$0.031	$5,969	$0.075	$57,071	$0.87	$0	$0.000	-$48,614	-$0.61
Mechanical Subcooling	$4,114	$0.052	$4,775	$0.060	$58,467	$0.81	$0	$0.000	-$49,578	-$0.63
Display Case Lighting Control	$4,683	$0.059	$5,173	$0.065	$181,454	$3.17	$0	$0.000	-$171,598	-$2.17
Heat Reclaim	$40,954	$0.517	$19,101	$0.241	$545,607	$8.88	$37,708	$0.057	-$447,844	-$7.26
CTZ05 - Santa Maria										
Floating Head Pressure	$17,002	$0.215	$12,535	$0.158	$153,901	$2.53	$4,917	$0.007	-$119,447	-$1.88
Condenser Specific Efficiency	$3,571	$0.045	$0	$0.000	$4,879	$0.09	$0	$0.000	-$1,307	-$0.02
Floating Suction Pressure	$2,489	$0.031	$5,969	$0.075	$56,655	$0.87	$0	$0.000	-$48,197	-$0.61
Mechanical Subcooling	$4,114	$0.052	$4,775	$0.060	$57,315	$0.80	$0	$0.000	-$48,426	-$0.61
Display Case Lighting Control	$4,683	$0.059	$5,173	$0.065	$182,338	$3.18	$0	$0.000	-$172,482	-$2.18
Heat Reclaim	$40,954	$0.517	$19,101	$0.241	$568,282	$9.20	$37,708	$0.057	-$470,519	-$7.59
CTZ07 - San Diego (Lindbergh Field)										
Floating Head Pressure	$17,002	$0.215	$12,535	$0.158	$130,996	$2.21	$4,917	$0.007	-$96,542	-$1.56
Condenser Specific Efficiency	$3,571	$0.045	$0	$0.000	$6,586	$0.12	$0	$0.000	-$3,015	-$0.04
Floating Suction Pressure	$2,489	$0.031	$5,969	$0.075	$58,013	$0.89	$0	$0.000	-$49,555	-$0.63
Mechanical Subcooling	$4,114	$0.052	$4,775	$0.060	$62,173	$0.87	$0	$0.000	-$53,284	-$0.67
Display Case Lighting Control	$4,683	$0.059	$5,173	$0.065	$189,148	$3.29	$0	$0.000	-$179,292	-$2.26
Heat Reclaim	$40,954	$0.517	$19,101	$0.241	$284,389	$5.27	$37,708	$0.057	-$186,626	-$3.65

	Measure Cost		Maintenance Cost		TDV Cost Savings		Refrigerant Cost		Life Cycle Cost	
	($)	($/SF)	($)	($/SF)	($)	($/SF)	($)	($/SF)	($)	($/SF)
CTZ08 – Fullerton										
Floating Head Pressure	$17,002	$0.215	$12,535	$0.158	$150,307	$3.13	$4,917	$0.007	-$115,853	-$2.48
Condenser Specific Efficiency	$3,901	$0.049	$0	$0.000	$10,472	$0.18	$0	$0.000	-$6,571	-$0.08
Floating Suction Pressure	$2,489	$0.031	$5,969	$0.075	$58,700	$0.89	$0	$0.000	-$50,242	-$0.63
Mechanical Subcooling	$4,114	$0.052	$4,775	$0.060	$66,352	$0.95	$0	$0.000	-$57,462	-$0.73
Display Case Lighting Control	$4,683	$0.059	$5,173	$0.065	$184,423	$3.21	$0	$0.000	-$174,567	-$2.20
Heat Reclaim	$40,954	$0.517	$19,101	$0.241	$256,694	$5.28	$37,708	$0.057	-$158,931	-$3.66
CTZ10 – Riverside										
Floating Head Pressure	$17,002	$0.215	$12,535	$0.158	$131,868	$2.16	$4,917	$0.007	-$97,414	-$1.52
Condenser Specific Efficiency	$3,901	$0.049	$0	$0.000	$19,110	$0.32	$0	$0.000	-$15,209	-$0.19
Floating Suction Pressure	$2,489	$0.031	$5,969	$0.075	$61,242	$0.93	$0	$0.000	-$52,784	-$0.67
Mechanical Subcooling	$4,114	$0.052	$4,775	$0.060	$74,327	$1.03	$0	$0.000	-$65,437	-$0.83
Display Case Lighting Control	$4,683	$0.059	$5,173	$0.065	$182,220	$3.17	$0	$0.000	-$172,364	-$2.18
Heat Reclaim	$40,954	$0.517	$19,101	$0.241	$257,436	$4.39	$37,708	$0.057	-$159,673	-$2.78
CTZ12 – Sacramento (Sacramento Executive Airport)										
Floating Head Pressure	$17,002	$0.215	$12,535	$0.158	$139,958	$2.29	$4,917	$0.007	-$105,504	-$1.64
Condenser Specific Efficiency	$3,901	$0.049	$0	$0.000	$17,493	$0.29	$0	$0.000	-$13,592	-$0.17
Floating Suction Pressure	$2,489	$0.031	$5,969	$0.075	$61,459	$0.93	$0	$0.000	-$53,001	-$0.67
Mechanical Subcooling	$4,114	$0.052	$4,775	$0.060	$72,075	$1.00	$0	$0.000	-$63,185	-$0.80
Display Case Lighting Control	$4,683	$0.059	$5,173	$0.065	$184,090	$3.21	$0	$0.000	-$174,234	-$2.20
Heat Reclaim	$40,954	$0.517	$19,101	$0.241	$399,091	$6.60	$37,708	$0.057	-$301,328	-$4.98
CTZ13 – Fresno										
Floating Head Pressure	$17,002	$0.215	$12,535	$0.158	$133,652	$2.19	$4,917	$0.007	-$99,198	-$1.55
Condenser Specific Efficiency	$3,901	$0.049	$0	$0.000	$21,812	$0.36	$0	$0.000	-$17,911	-$0.23
Floating Suction Pressure	$2,489	$0.031	$5,969	$0.075	$63,559	$0.96	$0	$0.000	-$55,101	-$0.70
Mechanical Subcooling	$4,114	$0.052	$4,775	$0.060	$77,962	$1.08	$0	$0.000	-$69,072	-$0.87
Display Case Lighting Control	$4,683	$0.059	$5,173	$0.065	$187,412	$3.29	$0	$0.000	-$177,556	-$2.24
Heat Reclaim	$40,954	$0.517	$19,101	$0.241	$331,549	$5.52	$37,708	$0.057	-$233,786	-$3.90

	Measure Cost		Maintenance Cost		TDV Cost Savings		Refrigerant Cost		Life Cycle Cost	
	($)	($/SF)	($)	($/SF)	($)	($/SF)	($)	($/SF)	($)	($/SF)
CTZ14 – Palmdale										
Floating Head Pressure	$17,002	$0.215	$12,535	$0.158	$146,744	$2.38	$4,917	$0.007	-$112,291	-$1.74
Condenser Specific Efficiency	$3,901	$0.049	$0	$0.000	$21,694	$0.36	$0	$0.000	-$17,793	-$0.22
Floating Suction Pressure	$2,489	$0.031	$5,969	$0.075	$61,882	$0.93	$0	$0.000	-$53,424	-$0.67
Mechanical Subcooling	$4,114	$0.052	$4,775	$0.060	$75,368	$1.04	$0	$0.000	-$66,479	-$0.84
Display Case Lighting Control	$4,683	$0.059	$5,173	$0.065	$182,442	$3.20	$0	$0.000	-$172,586	-$2.18
Heat Reclaim	$40,954	$0.517	$19,101	$0.241	$358,692	$5.91	$37,708	$0.057	-$261,007	-$4.29
CTZ15 - Palm Springs										
Floating Head Pressure	$17,002	$0.215	$12,535	$0.158	$113,670	$1.85	$4,917	$0.007	-$79,217	-$1.20
Condenser Specific Efficiency	$3,901	$0.049	$0	$0.000	$33,395	$0.55	$0	$0.000	-$29,494	-$0.37
Floating Suction Pressure	$2,489	$0.031	$5,969	$0.075	$69,995	$1.06	$0	$0.000	-$61,538	-$0.78
Mechanical Subcooling	$4,114	$0.052	$4,775	$0.060	$101,004	$1.40	$0	$0.000	-$92,115	-$1.16
Display Case Lighting Control	$4,683	$0.059	$5,173	$0.065	$191,788	$3.36	$0	$0.000	-$181,932	-$2.30
Heat Reclaim	$40,954	$0.517	$19,101	$0.241	$44,962	$1.07	$37,708	$0.057	$52,653	$0.55

Economic analysis results for the CO_2 secondary (indirect) or cascade cooling measure, below:

	Measure Cost ($)	Refrigerant Cost Savings Range ($)		TDV Cost Savings ($)	Life-Cycle Cost Range ($)	
		Low	High		Low	High
Small Supermarket	$50,000	$70,643	$95,690	$0	-$20,643	-$45,690
Large Supermarket	$120,000	$355,174	$480,615	$0	-$235,174	-$360,615

j. Analysis Tools	None. All measures are mandatory measures so no simulation tools are required for compliance.
k. Relationship to Other Measures	Many of the subject energy efficiency measures are highly inter-dependent. The analysis methodology for inter-dependent measures was designed to ensure that the results would appropriately reflect the incremental costs and benefits, with the most commonly used and cost-effective measures being incorporated in the "baseline" for the measures that were less commonly used or potentially less cost-effective. • Floating head pressure with variable speed condenser fans and variable-setpoint (ambient following) control strategy was used as the basis of comparison for the condenser specific efficiency measure. • For the analysis of the mechanical subcooling measure, floating head pressure to 70°F SCT was assumed as the basis of comparison, rather than fixed (higher) head pressure to avoid overstating the benefit of liquid subcooling. • The heat reclaim measure was evaluated with floating head pressure to 70°F in the baseline case to capture the trade-off in increased compressor energy associated with the use of a heat recovery holdback valve—which is necessary to achieve substantial heat recovery.

3. Methodology

This section provides a description of the methodology used to evaluate the various supermarket refrigeration measures under consideration of the 2013 code change cycle. Topics in this section include:

- Supermarket Prototype Definitions
- Simulation and Cost Effectiveness Methodology
- Direct Refrigerant Emissions Calculation Methodology
- Acceptance Test Methodology
- Stakeholder Meeting Process

Supermarket Prototype Definitions

Prototype supermarket models were developed to estimate the cost effectiveness of the proposed Title 24 supermarket standards addressed in this report. Three supermarket prototypes were developed: a small supermarket, a large supermarket, and a "big-box" food store utilizing large "point of sale" refrigeration boxes with display doors. The prototypes were developed based on over 10 years of Savings By Design data.

Savings By Design is a design assistance and incentive program offered by utilities in California, including an initiative specifically focused on supermarkets and refrigerated warehouses since 2001. Under this program, several hundred supermarkets have been evaluated using whole-building simulation focused on refrigeration measures, as well as receiving incentives following post-installation field inspections. Information obtained from this program provided a detailed understanding of current industry practice.

Refrigeration system types and equipment, design loads, refrigerants, operating schedules, and control strategies for this analysis were obtained from the Base Case criteria used in the California Savings By Design program. 2008 Title 24 requirements for envelope, lighting, and HVAC systems, as well as federal walk-in standards were also used to develop the prototype assumptions.

Several refrigeration system configurations were identified, sufficient to cover most of the designs used for supermarkets, for analysis of the proposed measures. Appendix B contains schematics of each system type, while Appendix C describes the refrigeration, HVAC, lighting, and envelope assumptions for each prototype. Figure 1 lists the three prototype supermarket sizes.

Analysis Prototype		Area (Square Feet)
Prototype 1	Small Supermarket	10,000
Prototype 2	Large Supermarket	60,700
Prototype 3	Big Box Food Store	150,000

Figure 1: Prototype supermarket summary

Each refrigeration measure evaluated in this analysis was applied to all three prototypes (unless otherwise noted in Section 4). In addition, each prototype was developed with three different condenser types and two different compressor system configurations. To designate each combination of prototype supermarket, condenser type and compressor system type, a three-letter designation was employed throughout this report, as described in Figure 2.

Supermarket Prototype	Condenser Type	Compressor System	Designation
Small Supermarket	Air-cooled	Central	SAC
		Distributed	SAD
	Evaporative cooled	Central	SEC
	Water-cooled condenser with water-cooled fluid cooler	Central	SFC
		Distributed	SFD
Large Supermarket	Air-cooled	Central	MAC
		Distributed	MAD
	Evaporative cooled	Central	MEC
	Water-cooled condenser with water-cooled fluid cooler	Central	MFC
		Distributed	MFD
Big Box Store	Air-cooled	Central	LAC
		Distributed	LAD
	Evaporative cooled	Central	LEC
	Water-cooled condenser with water-cooled fluid cooler	Central	LFC
		Distributed	LFD

Figure 2: Size and system description for analysis prototypes

Energy Analysis and Cost Effectiveness Methodology

The energy usage for each supermarket prototype was evaluated using DOE-2.2R energy simulation software. The DOE-2.2R version used (2.2R) is a sophisticated component-based energy simulation program that can accurately model the building envelope, lighting systems, HVAC systems, and refrigeration systems—including the complex interaction between refrigerated supermarket display cases and the surrounding indoor environment. The 2.2R version is specifically designed to include refrigeration systems, using refrigerant properties, mass flow and component models to accurately describe refrigeration system operation and controls system effects.

Measures under consideration for the 2013 code change cycle were evaluated in ten different climate zones:

- CTZ01 - Arcata
- CTZ03 – Oakland
- CTZ05 – Santa Maria
- CTZ07 – San Diego (Lindbergh Field)
- CTZ08 - Fullerton
- CTZ10 – Riverside
- CTZ12 – Sacramento (Sacramento Executive Airport)
- CTZ13 – Fresno
- CTZ14 – Palmdale
- CTZ15 – Palm Springs

Climate zones were selected to cover a sufficient diversity of California climates to represent the sensitivity of supermarket refrigeration measures to climatic differences. Not all measures were simulated in all climate zones, where the rigor of performing individual climate zone analysis was not necessary. The subject climate zones for each measure are described in Section 4.

The cost-effectiveness of the proposed measures was calculated using the Life Cycle Costing (LCC) Methodology prepared by the California Energy Commission. According to the LCC methodology, a measure is considered cost-effective if the net present value of energy savings exceeds the implementation cost of the measure (if the Benefit/Cost (BC) ratio is greater than one). The net present value of the energy savings was quantified using the Time Dependent Valuation (TDV) methodology, which assigns an energy cost to each hour of the year in order to capture the actual cost of energy to users, to the utility systems, and to society—which is different depending on the time of the day, week, and year that the energy is consumed. TDV multipliers are statistically correlated to the weather files used in the simulation, the energy market, estimated escalation rates, and other factors. A unique set of TDV energy values was used for each weather file. Measure costs are equal to the material costs, freight cost, sales taxes, labor costs, and tool rental costs associated with installing and commissioning the equipment or material embodied by the measure, minus the same costs associated with the equipment or material embodied by the Base Case.

The Base Case assumptions concerning load, facility operations and other factors are held constant, with the only changes being those specific equipment changes or control strategies associated with each measure. Some measures involve adjustments to the Base Case in order to properly evaluate the energy savings. These “Baseline” adjustments are described in Section 4, as applicable.

Statewide Energy Savings Estimate

The statewide energy savings estimates for the proposed measures are calculated by multiplying the savings per square foot for each measure with the forecasted 2014 supermarket new construction square footage provided by the CEC (shown in Figure 3). Details associated with the nonresidential construction forecast data are included in Appendix K.

In the forecasted new construction data, supermarkets fall into the “food” building category. However, according to the CEC, the “food” category includes “Food and Beverage Stores,” and “Gasoline Stations,” respectively. 2007 US Census data was used to estimate the portion of forecasted new construction floor space that will be supermarket space subject to the proposed standards. The census data showed that 58% of total sales from the “food” category were from supermarkets (excluding convenience stores and gasoline stations). Therefore, it was assumed that supermarkets account for 58% of the total 2014 new construction square footage.

CZ	“Food” Category New Construction SF	Assumed Supermarket New Construction SF
1	25,423	14,745
2	164,614	95,476
3	512,331	297,152
4	408,136	236,719
5	79,245	45,962
6	685,183	397,406
7	949,209	550,541
8	838,656	486,421
9	1,804,297	1,046,493

10	524,087	303,970
11	310,350	180,003
12	1,213,309	703,719
13	672,035	389,781
14	127,392	73,888
15	45,319	26,285
16	149,574	86,753
Total	8,509,163	4,935,315

Figure 3: 2014 Supermarket new construction in California climate zones

Statewide energy savings are computed for each of the three supermarket prototypes (Figure 1), and overall statewide savings are calculated by summing up measure level savings from all three prototypes. History data from SCE's Savings by Design utility incentive program from 2002 to 2010 was utilized to estimate the expected percentage of supermarket new construction that is comprised of supermarkets that are similar to each of the three prototypes. The data suggests that small supermarkets, large supermarkets, and big box food stores respectively account for approximately 11%, 53% and 36% of the supermarket population. The forecasted new construction population was assumed to match this trend.

Direct Refrigerant Emissions Calculations

In cases where energy efficiency measures are expected to impact refrigerant charge size and/or leak rates, thereby impacting the refrigeration system's annual emissions of high-global warming potential (GWP) refrigerants, analyses were undertaken to quantify these impacts and assess the measure based on net cost and greenhouse gas (GHG) benefit. This was performed by (1) quantifying the direct (refrigerant) and indirect (energy) emission impact associated with the measures on a carbon-equivalent basis, and (2) quantifying the dollar savings of the measures based on measure cost, refrigerant cost, and TDV energy cost. Note that the energy costs and refrigerant costs also account for the monetized GHG impacts associated with energy consumption and refrigerant emissions. [5]

3.1.1 Base case refrigerant charge description

Charge size and leak rate assumptions were developed for each base case store, as summarized in Figure 4. For leak rates, a reasonable range was identified for each store type, due to the high variability. Leak rates assumptions also reflect the anticipated average leak rate of supermarkets in California following the implementation of ARB's recently adopted Refrigerant Management Program.[6] Average GWP values of 3,922 and 3,985 were assumed for R-404A and R-507 respectively in all base case system configurations, based on the IPCC Fourth Assessment Report (2008). Appendix E: Charge Size and Leak Rate Assumptions for Direct Emissions provides a thorough description of the methodology used to develop these assumptions.

[5] Carbon costs associated with refrigerant emissions were incorporated into the cost analysis using CEC price forecasts for annual carbon costs ($/ton) in 2014 ($19.87) through 2029 ($79.00), based on an assumed 15-year lifetime of equipment. Environmental externalities (i.e., carbon costs) associated with energy consumption were incorporated into the cost analysis per the methodology described in CEC's Life-Cycle Cost Methodology (2011), available at: www.energy.ca.gov/title24/2013standards/prerulemaking/documents/general_cec_documents/2011-01-14_LCC_Methodology_2013.pdf

[6] The ARB Initial Statement of Reasons (ISOR) for Proposed Regulation for the Management of High Global Warming Potential Refrigerants for Stationary Sources (2009) states that existing facilities, which use "business as usual" equipment design and installation practices can be expected to lower the annual refrigerant leak rate from the current 18% - 20% for supermarkets (state average) to 10% based on more stringent inspection and maintenance practices.

Base Case Store	Charge Size (kg)	Leak Rate	
		Lower Bound	Upper Bound
SAC	330	10%	15%
SAD	165	5%	10%
SEC	360	10%	15%
SFC	200	10%	15%
SFD	100	5%	10%
MAC	1,660	10%	15%
MAD	830	5%	10%
MEC	1,825	10%	15%
MFC	995	10%	15%
MFD	500	5%	10%
LAC	2,000	10%	15%
LAD	1,000	5%	10%
LEC	2,200	10%	15%
LFC	1,200	10%	15%
LFD	600	5%	10%

Figure 4: Base case charge size and leak rate assumptions

3.1.2 Direct emissions methodology

The following energy efficiency measures have direct emissions impacts.

Floating head pressure

With regard to direct (refrigerant) emissions, the analysis allowed for an increase in refrigerant charge of 5% for systems with air-cooled condensers,[7] due to seasonal change in ambient temperature and the need for sufficient charge on cold days when floating head pressure on certain systems may result in greater system charge, most commonly due to higher evaporator operating charge due to lower mass flow and lower entering liquid temperature. Although this increase may only be observed in colder climates, to be conservative, the assumption of a 5% increase in charge size was applied to all climate zones.

Refrigeration heat recovery

Per the definition of the measure, refrigerant heat recovery was assumed to increase charge size by up to 0.35 lbs/MBH of heating capacity. Additionally, refrigerant heat recovery is assumed to increase a supermarket's annual refrigerant leak rate by 5% as a result of the additional equipment and piping required to implement this measure.

CO_2 secondary (indirect) or cascade cooling

[7] According to some industry experts, floating head pressure may actually lead to a decrease in charge size and/or leak rate, depending on system design and climate. The assumptions used in this analysis are conservative, intended to represent a worst-case yet realistic scenario.

Of all the proposed measures, secondary cooling systems have the most significant impact on the charge size and annual refrigerant leak rate of a supermarket refrigeration system. This is due to the avoided need to circulate the primary refrigerant throughout the store. For this analysis, it is assumed that a secondary cooling system has a charge size equal to 0.81×10^{-3} lbs/Btu/h of the system's cooling capacity and an annual leak rate of 2% - 8%. The methodology used to develop these assumptions is provided in Appendix E: Charge Size and Leak Rate Assumptions for Direct Emissions.

Acceptance Testing

The costs for each measure include additional incremental fine-tuning and commissioning labor during construction and start-up to achieve proper operation, as well as the additional time required for acceptance testing of measures, which would typically be done concurrently.

Acceptance testing protocols will be developed and refined through field tests in new stores.

Stakeholder Meeting Process

As part of the CASE study development process, a series of meetings with stakeholder were conducted to present CASE Studies findings to, and solicit comments from, industry stakeholder affected by the potential additions to the Title 24 code for supermarkets. A stakeholder list was compiled of equipment manufacturers and distribution representatives, supermarket refrigeration system designers and contractors, control system manufacturers, supermarket owners and operators, utility representatives, code officials, and staff from California Energy Commission (CEC) and California Air Resources Board (CARB).

Three stakeholder meetings were held. The first two meetings gave outlines of the proposed analysis methodology and proposed measures. One of these was held concurrently with the 2010 Food Marketing Institute Energy and Store Development Conference to gain broader industry involvement. The third meeting gave cost effectiveness of proposed measures and proposed requirements. All three gave background on current code requirements and the code revision process.

In addition, stakeholders were contacted at ASHRAE meetings and by phone.

The stakeholder meeting minutes are posted at
http://www.h-m-g.com/T24/supermarket%20refrig/supermarketrefrig.htm

4. Analysis and Results

Section 4 presents the measure descriptions and incremental analysis results. The objective of the analysis is to determine requirements which are cost effective over the life of the facility and which can be achieved with currently available technology or that which can reasonably be expected to be available in the marketplace by the time the 2013 standard takes effect, in January 2014.

Energy savings and cost effectiveness results for the following measures are captured in this section:

- Floating head pressure
- Condenser specific efficiency
- Floating suction pressure
- Mechanical subcooling
- Display case lighting control
- Refrigeration heat recovery
- Prohibit open upright frozen food cases
- CO_2 secondary (indirect) or cascade cooling

Where applicable, measure costs include the present value of maintenance costs for the analysis period (assumed to be 15 years, based on Life Cycle Costing methodology).

Full results for each measure are presented in Appendix J. Results presented in this section are abbreviated averages, which are presented in three parts. The first part includes averages across all climate zones and are averaged based on prototype supermarket size and condenser type. Figure 5 shows a key for the three-letter designations used in the first part of the results tables in this section.

Three-Letter Designation	Description
SXX Average	Average of results for all small supermarket prototypes, including air-cooled, evaporative, and fluid cooled condensers, and central and distributed system types (SAC, SAD, SEC, SFC, and SFD)
MXX Average	Average of results for all large supermarket prototypes, including air-cooled, evaporative, and fluid cooled condensers, and central and distributed system types (MAC, MAD, MEC, MFC, and MFD)
LXX Average	Average of results for all big-box food store prototypes, including air-cooled, evaporative, and fluid cooled condensers, and central and distributed system types (LAC, LAD, LEC, LFC, and LFD)
XAX Average	Average of all results with air-cooled condensers, including small, large, and big-box food stores, and both central and distributed systems (SAC, SAD, MAC, MAD, LAC, LAD)
XEX Average	Average of all results with evaporative-cooled condensers, including small, large, and big-box food stores, and both central and distributed systems (SEC, MEC, LEC)
XFX Average	Average of all results with water-cooled condensers, including small, large, and big-box food stores, and both central and distributed systems (SFC, SFD, MFC, MFD, LFC, LFD)

Figure 5: Legend for analysis results tables

The second part of the results table in each section shows average results across all prototype sizes, condenser types, and system configurations for each climate zone, and the third part shows the absolute maximum and minimum values across all climate zones, prototype sizes, condenser types, and system configurations.

Floating Head Pressure

This measure evaluates the feasibility and cost-effectiveness of floating head pressure to 70°F with ambient following control logic and condenser fan variable speed control. All condenser fans on all condensers serving a common high-side were assumed to be controlled in unison (at the same speed). The ambient following control logic sets the target SCT by adding a fixed control temperature difference (TD) to the ambient temperature (wet bulb for evaporative-cooled and fluid cooled condensers, or dry bulb for air-cooled condensers). The condenser fan speeds are continuously adjusted to maintain the target SCT, with an override minimum SCT of 70°F, and an override maximum SCT of 95°F in hot climates and 90°F for mild climates. As explained in Appendix D, two simulation models were constructed, with the simulated equipment sized based on design criteria from two different climate zones—a representative hot climate zone (CTZ12 – Sacramento), and a representative mild climate zone (CTZ05 – Santa Maria). For statewide analysis, either the representative hot-climate model or mild-climate model was simulated in each of the ten selected climate zones.

For this measure, the ambient-following control TDs were initially simulated at the design TDs and then checked to determine if a lower TD would increase savings. If so, the optimum TD was determined iteratively and then increased by two degrees to avoid over-optimization of simulation results. In actual practice, the TD is often adjusted to achieve an average condenser fan speed of 60% to 80% when the system is operating in the control range (i.e. between the 70°F minimum and the minimum maximum SCT) – which in most instances is close to the optimum TD, and effectively overcomes sensor errors. Figure 6 shows the control TDs used for analysis of each of the refrigeration system configurations and for each climate-specific prototype

Supermarket Prototype	Condenser Type	System Type	Control TD	
			Hot-Climate Prototypes	Cool-Climate Prototypes
Small Supermarket	Air-cooled	Central	10°F LT, 13°F MT	10°F LT, 15°F MT
		Distributed	9°F LT, 12°F MT	10°F LT, 15°F MT
	Evaporative	Central	18°F	22°F
	Fluid Cooler	Central	32°F	32°F
		Distributed	32°F	32°F
Large Supermarket	Air-cooled	Central	10°F LT, 13°F MT	10°F LT, 15°F MT
		Distributed	10°F LT, 15°F MT	10°F LT, 15°F MT
	Evaporative	Central	22°F	24°F
	Fluid Cooler	Central	32°F	33°F
		Distributed	32°F	33°F
Big Box Store	Air-cooled	Central	10°F LT, 13°F MT	10°F LT, 15°F MT
		Distributed	8°F LT, 10°F MT	10°F LT, 15°F MT

	Evaporative	Central	16°F	22°F
	Fluid Cooler	Central	32°F	32°F
		Distributed	32°F	32°F

Figure 6: Summary of ambient following control TDs for SCT control measure

The Base Case operation assumes a fixed 85°F saturated condensing temperature (SCT) setpoint for small supermarket prototypes, and a fixed 80°F SCT setpoint for Large Supermarkets and Big Box Food store prototypes, based on observations that smaller systems are more likely to operate at higher head pressures and are less likely to be subject to chain specifications and automated setpoint monitoring.

4.1.1 Analysis results by climate zone

Energy analysis results

Figure 6 below summarizes the energy results for the floating head pressure measure simulated in all ten climate zones:

	Energy Savings (kWh)	Energy Savings/ SF (kWh)	TDV Cost Savings ($)	TDV Cost Savings /SF ($)	Measure Cost plus Maintenance Cost ($)
SXX Average	25,989	1.64	$49,532	$3.13	$13,923
MXX Average	94,194	1.58	$162,842	$2.73	$35,251
LXX Average	121,870	0.75	$212,155	$1.31	$39,436
XAX Average	124,636	2.08	$222,211	$3.80	$33,055
XEX Average	50,565	0.76	$97,711	$1.60	$27,191
XFX Average	51,792	0.85	$82,707	$1.38	$27,191

All Averages					
CTZ01 - Arcata	91,871	1.49	$165,461	$2.700	$29,537
CTZ03 – Oakland	81,873	1.34	$148,540	$2.441	$29,537
CTZ05 – Santa Maria	84,642	1.39	$153,901	$2.532	$29,537
CTZ07 – San Diego	68,631	1.16	$130,996	$2.208	$29,537
CTZ08 - Fullerton	75,743	1.27	$150,307	$3.129	$29,537
CTZ10 – Riverside	79,688	1.31	$131,868	$2.165	$29,537
CTZ12 – Sacramento	83,625	1.37	$139,958	$2.294	$29,537
CTZ13 – Fresno	80,300	1.32	$133,652	$2.194	$29,537
CTZ14 – Palmdale	90,771	1.47	$146,744	$2.382	$29,537
CTZ15 – Palm Springs	69,697	1.13	$113,670	$1.848	$29,537

Maximum	204,068	2.91	$392,707	$9.979	$44,484
Minimum	6,039	0.18	$14,257	$0.267	$13,040

Figure 7: Energy analysis results for floating head pressure measure

Refrigerant analysis results

Impacts on the R-404A/R-507 refrigerant charge size and leak rate were also analyzed for this measure. Figure 8 summarizes the results of this analysis in terms of refrigerant emissions in pounds. Note that refrigerant emissions are assumed to be independent of the design climate zone.

	Annual Refrigerant Savings (Range)	
	Pounds	
	Low	**High**
SXX Average	-1	-1
MXX Average	-7	-5
LXX Average	-9	-6
XAX Average	-15	-9
XEX Average	0	0
XFX Average	0	0
All Average	-6	-4

Figure 8: Refrigerant analysis results for floating head pressure measure

GHG analysis results

Figure 9 summarizes the impact of GHG emissions associated with both direct (refrigerant) and indirect (energy) emissions (shown in metric tons of carbon dioxide equivalent [$MTCO_2eq$]).

	Annual Refrigerant Savings (Range)		**Annual Energy Savings**	**Net Annual Savings (Range)**	
	$MTCO_2eq$		**$MTCO_2eq$**	**$MTCO_2eq$**	
	Low	**High**		**Low**	**High**
SXX Average	-3	-2	11	8	9
MXX Average	-13	-8	38	25	30
LXX Average	-16	-10	50	34	40
XAX Average	-26	-16	51	25	34
XEX Average	0	0	21	21	21
XFX Average	0	0	21	21	21
All Average					
CTZ01 - Arcata	-11	-7	37	27	31

CTZ03 – Oakland	-11	-7	33	23	27
CTZ05 – Santa Maria	-11	-7	35	24	28
CTZ07 – San Diego	-11	-7	28	17	21
CTZ08 - Fullerton	-11	-7	31	20	24
CTZ10 – Riverside	-11	-7	32	22	26
CTZ12 – Sacramento	-11	-7	34	24	28
CTZ13 – Fresno	-11	-7	33	22	26
CTZ14 – Palmdale	-11	-7	37	26	30
CTZ15 – Palm Springs	-11	-7	28	18	22

Maximum Net Savings Across All Store Simulations	63	73
Minimum Net Savings Across All Store Simulations	-2	2

Figure 9: GHG analysis results for floating head pressure measure

Savings analysis results

Figure 10 summarizes the net impacts of this measure on lifetime costs. Note that the energy cost savings and refrigerant cost savings account for the monetized GHG impacts associated with energy consumption and refrigerant emissions, based on the CEC price forecasts for annual carbon costs.

	Measure Cost ($)	Refrigerant Cost Savings Range ($)		TDV Cost Savings ($)	Net Lifetime Savings Range ($)		Benefit/Cost Ratio Range ($)	
		Low	High		Low	High	Low	High
SXX Average	$13,923	-$1,495	-$934	$49,532	$34,114	$34,675	3.21	3.33
MXX Average	$35,251	-$7,521	-$4,617	$162,842	$120,070	$122,973	3.81	4.08
LXX Average	$39,436	-$9,190	-$5,744	$212,155	$163,529	$166,976	4.36	4.70
XAX Average	$33,055	-$15,171	-$9,413	$222,211	$173,985	$179,744	4.61	5.23
XEX Average	$27,191	$0	$0	$97,711	$70,520	$70,520	3.59	3.59
XFX Average	$27,191	$0	$0	$82,707	$55,516	$55,516	3.04	3.04

All Average								
CTZ01 - Arcata	$29,537	-$6,068	-$3,765	$165,461	$129,856	$132,159	4.65	4.97
CTZ03 – Oakland	$29,537	-$6,068	-$3,765	$148,540	$112,935	$115,239	4.17	4.46
CTZ05 – Santa Maria	$29,537	-$6,068	-$3,765	$153,901	$118,296	$120,599	4.32	4.62
CTZ07 – San Diego	$29,537	-$6,068	-$3,765	$130,996	$95,390	$97,694	3.68	3.93
CTZ08 - Fullerton	$29,537	-$6,068	-$3,765	$150,307	$114,701	$117,005	4.22	4.51
CTZ10 – Riverside	$29,537	-$6,068	-$3,765	$131,868	$96,263	$98,566	3.70	3.96
CTZ12 – Sacramento	$29,537	-$6,068	-$3,765	$139,958	$104,352	$106,656	3.93	4.20
CTZ13 – Fresno	$29,537	-$6,068	-$3,765	$133,652	$98,047	$100,351	3.75	4.01

CTZ14 – Palmdale	$29,537	-$6,068	-$3,765	$146,744	$111,139	$113,443	4.12	4.41
CTZ15 – Palm Springs	$29,537	-$6,068	-$3,765	$113,670	$78,065	$80,368	3.19	3.41

Maximum Net Savings Across All Store Simulations	$336,736	$342,480	7.02	7.82
Minimum Net Savings Across All Store Simulations	$1,217	$1,217	1.09	1.09

Figure 10: Cost savings results for floating head pressure measure

The results indicate that the measure is cost-effective for all system configurations and all climate zones even though the direct GHG impacts associated with increased refrigerant emissions slightly reduce the net climate benefits and cost savings of this measure. The code recommendation is a mandatory minimum head pressure of 70°F with variable-speed condenser fan control with ambient-following setpoint control.

Wetbulb sensor reliability is a concern for ambient-following control of evaporative condensers. Wetbulb sensors (in practice normally a drybulb sensor and humidity sensor are used to derive WBT) generally lose drift or lose calibration over time. Figure 72 in Appendix F explores the cost savings with varying control TDs for evaporative condensers, to analyze the sensitivity of savings and economics vs. sensor calibration. The analysis determined that ambient-following control remains cost-effective even with significant sensor error.

Condenser Specific Efficiency

The cost-effectiveness of implementing a minimum condenser specific efficiency requirement was evaluated for both air-cooled and evaporative-cooled condensers. Condenser specific efficiency is the condenser Total Heat of Rejection (THR) capacity divided by the input electric power at 100 percent fan speed (including spray pump electric input power for evaporative condensers) at standard conditions. Figure 11 describes the two condenser types used for in the analysis.

Condenser Category	Condenser Type for Analysis
Evaporative-Cooled	Centrifugal-fan halocarbon condenser, for location indoors or outdoors, with integral spray pump.
Air-Cooled	Axial-fan halocarbon condenser for outdoor location.

Figure 11: Condenser description for specific efficiency measure

A direct correlation between cost and specific efficiency could not be directly determined from manufacturer's catalog information, as manufacturing cost is not proportionately reflected in model-by-model sell price for these units. An alternative method was employed to establish the minimum cost-effective condenser specific efficiency, which is more consistent with how manufacturers could comply with an efficiency standard, with the least difficulty, in terms of product redesign. In general, specific efficiency is improved by reducing the fan power for a given condenser.

Condenser fan power reduces by approximately the "third-power" of fan speed reduction whereas condenser capacity is roughly linear (or better than linear) with reduction in fan speed. Manufacturers stated that both air-cooled and evaporative-cooled condensers generally have flexibility in fan design and speed and thus motor power. In particular, the maximum speed for air-cooled condensers using variable speed EC (electronically commutated; also called brushless DC or BLDC) motors can easily be reprogrammed at the factory, making specific efficiency essentially a 'settable' parameter.

The air-cooled condenser data provided by one manufacturer, shown in Figure 12, showing normalized values for heat rejection capacity, fan power, and resultant specific efficiency as a function of fan speed, illustrates the sensitivity of specific efficiency to fan speed, with everything else held constant. Plots of capacity and power increase reference the left scale, while the plot of specific efficiency increase references the right scale.

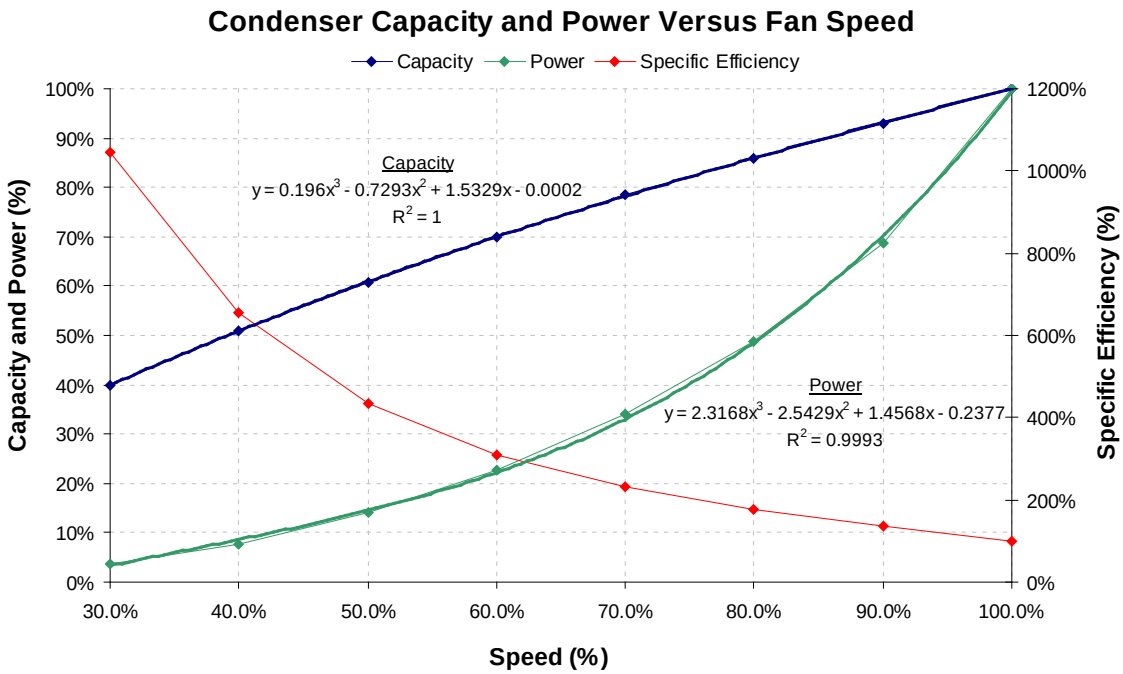

Normalized Speed:	**100%**	**90%**	**80%**	**70%**	**60%**	**50%**	**40%**	**30%**
Normalized Capacity:	100%	93%	86%	78%	70%	61%	51%	40%
Normalized Power:	100%	69%	49%	34%	23%	14%	8%	4%
Normalized Specific Efficiency:	100%	135%	177%	231%	308%	434%	655%	1,044%

Figure 12: Example normalized condenser capacity and power versus normalized speed

Figure 12 shows that the relationship between % fan speed and % condenser capacity is nearly linear while fan power is subject to the fan affinity laws, which state that % fan power exhibits a "third power" relationship with % fan speed. Consequently, specific efficiency increases exponentially at reduced fan speed. Without substantial product line changes manufacturers could utilize this relationship by reducing or limiting the full-load fan speed and motor power of any non-compliant condensers to a speed which achieves the required efficiency, thus still being able to market the condenser, with a revised capacity listing.

In many instances improvements could also be made with higher efficiency motors, fan blades, or fan venturis. This appears to be the most likely path for certain air-cooled halocarbon condensers which utilize inefficient motors. The methodology described above is considered the most conservative with respect to measure cost, and also an approach that could be adopted without major product line changes or "tooling" difficulty for smaller manufacturers.

A comparable method was employed to calculate measure cost for this analysis. A correlation was performed between end-user cost and full-speed condenser Total Heat of Rejection (THR) capacity

for various condenser types, as shown in Figure 13, for axial-fan air-cooled halocarbon condensers of two types; those with standard induction motors and those using EC motors. The correlation was used to calculate the cost of incrementally over-sizing the condenser, and then limiting the maximum condenser fan speed to match the capacity of the original-size condenser—to achieve the desired increase in condenser specific efficiency.

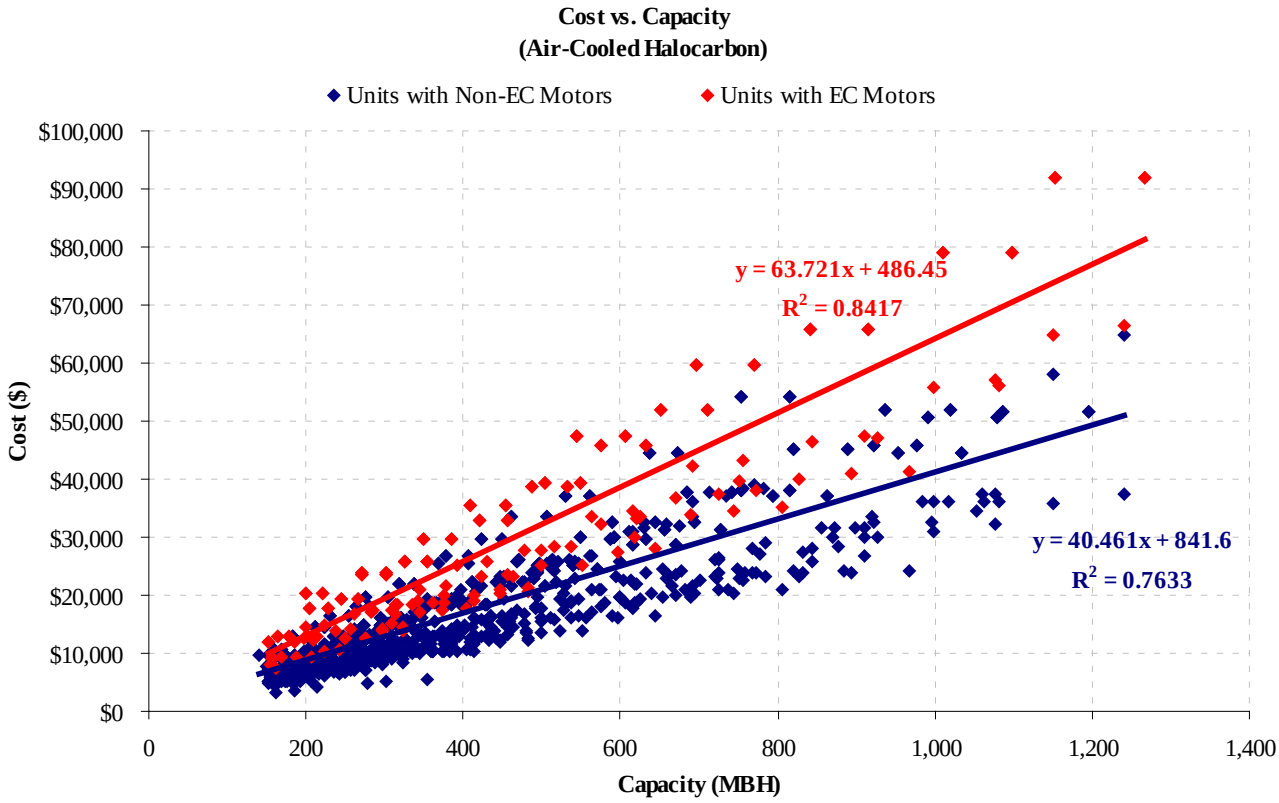

Figure 13: Condenser cost versus MBH capacity at specific-efficiency rating conditions

The table in Figure 14 demonstrates the preceding analytical approach for air-cooled axial-fan halocarbon condensers—with a beginning full-speed capacity of 564 thousand Btus per hour (MBH) and a beginning specific efficiency of 53 (Btu/h)/W. A 5% increase in condenser size changes specific efficiency from 53 to 65 (Btu/h)/W—a 23% increase.

% incremental increase in condenser size	Capacity of larger condenser at 100% speed (MBH)	Power of larger condenser at 100% speed at original specific efficiency (kW)	Required % capacity of oversized condenser to match original capacity	Maximum speed of new condenser to match original capacity	Power at reduced maximum speed (kW)	New Specific Efficiency ((Btu/h)/W)
0%	564	10.6	100%	100%	10.6	53
1%	570	10.8	99%	99%	10.2	55
2%	575	10.9	98%	97%	9.8	58
3%	581	11.0	97%	96%	9.4	60
4%	587	11.1	96%	94%	9.1	62
5%	592	11.2	95%	93%	8.7	65

Figure 14 Example of increasing condenser size and resultant specific efficiency

A DOE2.2R simulation was used to calculate prototype building energy usage and TDV energy cost with varying condenser specific efficiency (condenser fan power was adjusted, with all other parameters held constant). Figure 15 shows the simulation results for the large supermarket prototype with air-cooled condensers in the CTZ12-Sacramento climate zone.

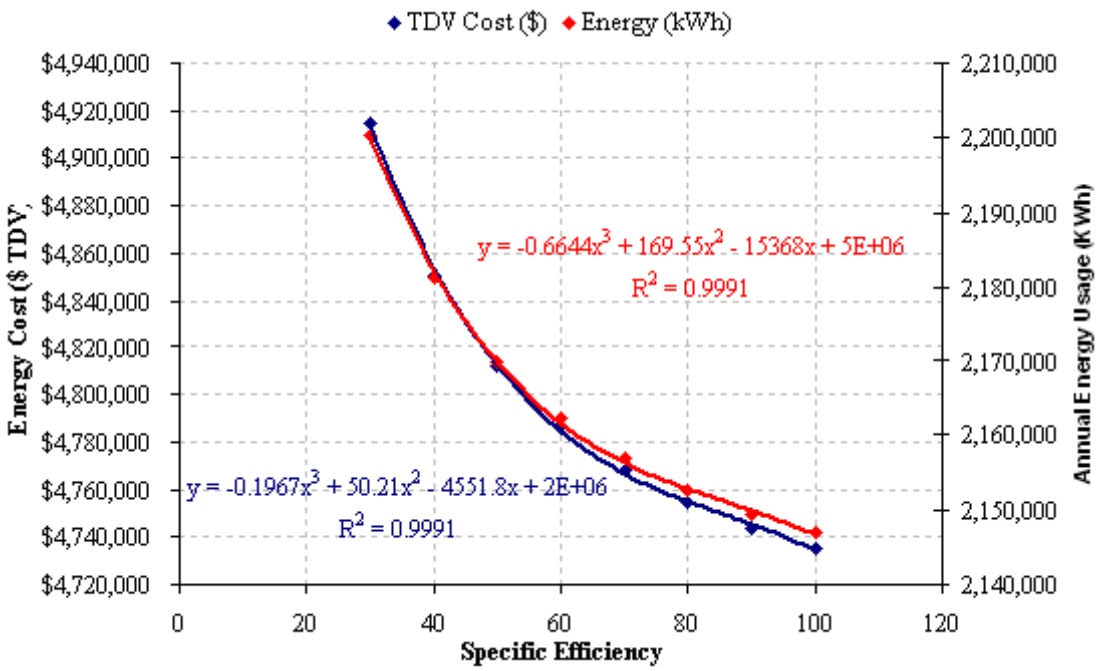

Figure 15: System energy usage and TDV energy cost versus specific efficiency

The simulation results, condenser costs, and incremental-oversize analysis were combined to determine the most cost-effective condenser specific efficiency—defined as the efficiency at which further incrementally increasing the condenser size is no longer cost-effective.

For this measure, the prototype supermarkets were simulated with a 70°F minimum condensing temperature with an ambient-following control strategy and variable speed control of all condenser fans. DOE-2.2R simulation keywords explicitly apply the subject control strategy.

The assumed specific-efficiency rating basis is 95°F ambient drybulb temperature and 105 °F saturated condensing temperature for air-cooled condensers, and 70°F ambient wetbulb temperature and 100°F saturated condensing temperature for evaporative condensers.

4.1.2 Incremental analysis results

For each evaluated condenser type, the condenser specific efficiency was incrementally increased until the cost-effectiveness of subsequent incremental improvements was no longer justified (based on Life-Cycle Costing methodology). The final specific efficiency increment became the proposed specific efficiency. The preliminary analysis was evaluated in climate zones CTZ05 (Santa Maria), and CTZ12 (Sacramento). Figure 16 summarizes the results from the preliminary analysis.

Condenser Type	Cost-effective minimum specific efficiency ((Btu/h)/W)	Basis of comparison for incremental analysis ((Btu/h)/W)	Base Case specific efficiency for statewide analysis ((Btu/h)/W)
Air-Cooled	65 (Btu/h)/W	55 (Btu/h)/W	53 (Btu/h)/W
Evaporative-Cooled	160 (Btu/h)/W	140 (Btu/h)/W	155 (Btu/h)/W

Figure 16: Preliminary condenser specific efficiency results

The base case specific efficiency for statewide savings analysis listed in Figure 16 is the average of condensers installed on new supermarket projects in California between 2006 and 2010 (those which were below the cost-effective specific efficiency), obtained from Savings By Design new construction projects. The data for the statewide analysis base case is included in Appendix G.

4.1.3 Analysis of results by climate zone

Figure 17 below summarizes the simulation results for the condenser specific efficiency measure simulated in all ten climate zones:

	Energy Savings (kWh)	Energy Savings/ SF (kWh)	TDV Cost Savings ($)	TDV Cost Savings /SF ($)	Measure Cost plus Maintenance Cost ($)	Benefit/ Cost Ratio
SXX Average	2,282	0.13	$14,214	$0.87	$1,656	26.54
MXX Average	7,483	0.12	$20,161	$0.33	$3,599	13.45
LXX Average	8,728	0.06	$27,115	$0.18	$5,696	9.35
XAX Average	7,069	0.12	$23,949	$0.53	$5,526	6.54
XEX Average	3,529	0.05	$9,055	$0.22	$795	50.13
XFX Average	2,282	0.13	$14,214	$0.87	$1,656	26.54

All Averages						
CTZ01 - Arcata	1,507	0.028	$3,353	$0.06	$3,571	3.72
CTZ03 – Oakland	2,181	0.040	$5,533	$0.10	$3,571	4.29
CTZ05 – Santa Maria	2,438	0.040	$4,569	$0.08	$3,571	4.01
CTZ07 – San Diego	2,937	0.054	$6,586	$0.12	$3,571	4.65
CTZ08 - Fullerton	3,268	0.058	$10,472	$0.18	$3,901	5.21
CTZ10 – Riverside	5,353	0.093	$19,110	$0.32	$3,901	6.94
CTZ12 – Sacramento	4,540	0.079	$17,493	$0.29	$3,901	6.55
CTZ13 – Fresno	6,692	0.114	$21,812	$0.36	$3,901	7.47
CTZ14 – Palmdale	6,629	0.113	$21,694	$0.36	$3,901	7.15
CTZ15 – Palm Springs	13,409	0.225	$33,395	$0.55	$3,901	10.32

Maximum	26,006	0.35	$ 66,062	$ 0.86	$ 9,862	24.70

Minimum	386	0.01	$ 756	$ 0.02	$ 79	0.32

Figure 17: Energy analysis summary for condenser specific efficiency measure by climate zone

The specific efficiency requirements are generally cost-effective in warmer climate zones: CTZ08 - Fullerton, CTZ10 - Riverside, CTZ12 - Sacramento, CTZ13 - Fresno, CTZ14 - Palmdale, and CTZ15 - Palm Springs. Note that outdoor halocarbon air-cooled condensers equipped with brushless DC (BLDC) motors were considered as well as condensers with "standard" induction motors. Nearly all air-cooled halocarbon condenser manufacturers offer condensers with BLDC fan motors, which are more expensive but have the advantage of inherently variable-speed with the application of a control signal, eliminating the need for a variable speed drive. As noted previously, for these condensers the maximum speed (and therefore the specific efficiency) is effectively a factory-settable parameter. Four climate zones have a Benefit/Cost (BC) ratio less than 1.0 for air-cooled BLDC condensers in some store sizes (see Appendix J for full cost results). In one climate zone, Arcata, BLDC equipped air-cooled condensers are not cost-effective for any prototype or configuration.

Because condensers can be purchased with standard fan motors (i.e. using BLDC motors is an elective design choice) and be cost effective at the proposed specific efficiency level in all climate zones, the examples below BC=1.0 does not justify establishing climate-specific exceptions to the standard.

An important observation is that several manufacturers have recently introduced new air-cooled condensers using "micro-channel" heat exchanger surface. This is a major technology change which is currently evolving. Initial information indicates these condensers will have markedly higher specific efficiencies than the current condenser designs; particularly better than the condensers using EC motors with standard condenser surface, which generally were found to have the lowest specific efficiency of all air-cooled condensers. Assuming the micro-channel condensers become dominant in the market, the proposed condenser efficiency will potentially be met quite easily and at lower cost than the assumptions in this study.

Some configurations and condensing types were shown to be not cost-effective in cooler climate zones. Figure 18 shows the analysis results for prototypes, system configurations, and condenser types that had Benefit/Cost ratios less than one. The results in Figure 18 exclude air-cooled condensers with BLDC motors, for reasons previously mentioned.

	Energy Savings (kWh)	Energy Savings/ SF (kWh)	TDV Cost Savings ($)	TDV Cost Savings /SF ($)	Measure Cost ($)	Benefit/ Cost Ratio
CTZ01 – Arcata						
SAD-Non-EC	431	0.03	$979	$0.06	$1,103	0.89
LAC-Non-EC	1,897	0.01	$4,414	$0.03	$5,540	0.80
LAD-Non-EC	1,334	0.01	$2,857	$0.02	$5,636	0.51
CTZ03 – Oakland						
LAD-Non-EC	1,828	0.01	$4,993	$0.03	$5,636	0.89
CTZ05 – Santa Maria						
LAD-Non-EC	4,759	0.03	$3,943	$0.02	$5,636	0.70

Figure 18: Analysis results for prototypes, system configurations, and condenser types with Benefit/Cost ratios less than 1

The coldest climate zone shown in Figure 18, Arcata, has the most configurations with benefit/cost ratios less than one. The weather in this climate zone is cool enough on average that the saturated condensing temperature is rarely above the minimum setting for any prototype, condensing type, or system configuration—mitigating the positive effects of increased condenser efficiency. In the remaining two climate zones from Figure 18, the big-box store prototype with distributed compressor suction groups and air-cooled condensers (designated LAD in the results table) is the only configuration shown to have benefit/cost ratios less than one. Based on the example store designs chosen as base case references, the condensers sizing for distributed systems was generally somewhat larger (smaller TD) than central system condensers, and are therefore more lightly-loaded for most of the year. For all prototypes and all climate zones, with all other parameters held constant, the benefit/cost ratio for the distributed configurations are always slightly less than the central-system counterparts. This difference is more likely artifact of the available examples than a consistent difference in design practice for the respective condensers and systems, and thus the low benefit/cost ratio for the single configuration in CTZ03 and CTZ05 would likely be resolved through more precise condenser selections. On the other hand, the low cost effectiveness is seen for multiple configurations in CTZ01.

The proposed code requirement includes minimum specific efficiencies for air-cooled and evaporative condensers except for climate zone CTZ01. A minimum size for this requirement was considered since fewer options are available for small condensers and the cost to manufacturers and owners to comply with the requirements may be high compared with the small savings and small sales volume. Condensers with a design Heat of Rejection capacity less than 150 MBH will be exempt. Very few supermarkets would use a condenser below this size limit. In addition, a limit on condenser fin density will be included in the proposed code language. Too-close fin spacing makes the condenser susceptible to rapid fouling with airborne debris, sometimes irreversibly, resulting in capacity deterioration. The fin density limitation is consistent with most chain specifications and simply avoids the possibility of using close fin spacing as a means to meet the code requirement. Condensers with a microchannel heat exchange surface are exempted from the fin density requirement, due to the construction of these condensers which do not have the same fouling characteristics and/or are easier to clean.

Floating Suction Pressure

This measure evaluates the cost-effectiveness of floating suction pressure automation for parallel compressor groups. With fixed suction control, the suction group setpoint is maintained constantly at the lowest pressure required to meet maximum fixture cooling loads (during peak temperature, humidity and shopper traffic) or to meet the peak walk-in loads, which are generally infrequent. With floating suction pressure, the setpoint is automatically adjusted based on walk-in or case temperature requirements, such that the pressure is no lower than necessary to meet the most demanding fixture or walk-in load. Energy savings result from operating at higher saturated suction temperatures on average, reducing lift and compressor power.

The Base Case control strategy for this measure is fixed setpoint with electronic sequencing of compressors. The Base Case SST setpoint was assumed to be the design SST for each suction group, minus two degrees for LT systems and four degrees for MT systems, to account for typical line losses

and the effect of normal compressor cycling; since compressor systems have finite steps of capacity, whether they employ uneven compressors, cylinder unloaders, etc.

Figure 19 describes the design compressor groups, the design suction temperatures and the simulation setpoints for each suction group in the refrigeration simulation study.

Supermarket Prototype	Suction Group	Design SST (°F)	SST Setpoint (°F) for Simulation
Small Supermarket	ALT	-25°F	-27°F
	BMT	21°F	17°F
Large Supermarket	AMT	18°F	14°F
	BMT	16°F	12°F
	CLT	-22°F	-24°F
Big-Box Food Store	AMT	-29°F	-31°F
	BLT	18°F	14°F
	CMT	-29°F	-31°F
	DLT	18°F	14°F

Figure 19: Suction group design SST and Base Case SST setpoints

To simulate the measure, the suction temperature setpoint was allowed to float high enough to meet the most demanding load on the suction group. The suction temperature is also restricted to a specified range. The minimum allowed suction temperature was assumed to be the Base Case suction temperature setpoint, with a maximum float of five degrees assumed in the simulation analysis.

4.1.4 Analysis results by climate zone

The suction temperature control measure was evaluated for all system types and in all climate zones. Figure 20 below summarizes the simulation results for the floating suction pressure measure:

	Energy Savings (kWh)	Energy Savings/ SF (kWh)	TDV Cost Savings ($)	TDV Cost Savings /SF ($)	Measure Cost plus Maintenance Cost ($)	Benefit/ Cost Ratio
SXX Average	8,428	0.53	$16,508	$1.04	$5,075	3.25
MXX Average	33,799	0.57	$65,475	$1.10	$10,149	6.45
LXX Average	50,213	0.31	$98,996	$0.61	$10,149	9.75
XAX Average	30,047	0.46	$60,311	$0.93	$8,458	7.13
XEX Average	26,407	0.39	$50,531	$0.75	$8,458	5.97
XFX Average	33,782	0.51	$65,240	$0.99	$8,458	7.71

All Average						
CTZ01 - Arcata	28,549	0.44	$54,689	$0.841	$8,458	6.47
CTZ03 – Oakland	29,510	0.45	$57,071	$0.874	$8,458	6.75
CTZ05 – Santa Maria	29,299	0.45	$56,655	$0.868	$8,458	6.70

CTZ07 – San Diego	29,996	0.46	$58,013	$0.891	$8,458	6.86
CTZ08 - Fullerton	30,339	0.46	$58,700	$0.889	$8,458	6.94
CTZ10 – Riverside	31,196	0.47	$61,242	$0.926	$8,458	7.24
CTZ12 – Sacramento	30,864	0.47	$61,459	$0.932	$8,458	7.27
CTZ13 – Fresno	31,935	0.49	$63,559	$0.963	$8,458	7.51
CTZ14 – Palmdale	31,286	0.47	$61,882	$0.932	$8,458	7.32
CTZ15 – Palm Springs	35,156	0.53	$69,995	$1.055	$8,458	8.28

Maximum	65,726	0.74	$ 129,036	$ 1.59	$ 10,149	12.71
Minimum	6,458	0.24	$ 12,317	$ 0.47	$ 5,075	2.43

Figure 20: Savings results for floating suction pressure by climate zone

The results table shows that the minimum benefit/cost ratio for any prototype, system configuration, or condenser type is 2.4—floating suction pressure is therefore considered cost-effective for all system configurations and in all climate zones. This measure is minimally sensitive to climate conditions.

The control logic for floating suction pressure is already included in nearly all supermarket rack controllers. Furthermore, computer control of temperatures in the display cases and walk-ins is also a standard feature. Typically, no additional hardware is required to achieve floating suction pressure control (minimal wiring and temperature sensor costs were included in the overall measure cost to evaluate the most expensive case). The cost for this measure primarily consists of labor costs to commission and fine-tune the controls, plus the 15-year present value of maintenance, ongoing fine-tuning, and setpoint verification.

The proposed code requirement consists of mandatory floating suction pressure control automation on all systems with multiple compressors, or single compressor systems with variable capacity capability. Since floating suction pressure can conflict with maintaining humidity in preparation areas, and because the systems which serve preparation areas are often also used primarily for mechanical subcooling (which is generally not compatible with floating suction pressure), the requirement will be limited to systems with a design SST below 30°F. Exceptions will apply to compressor groups attached primarily to secondary-loop chillers or that serve the high stage of cascaded refrigeration system.

Naturally, floating suction requires that the suction pressure control logic acts to increase the suction pressure before the cooling effect is otherwise reduced, by operation of a liquid solenoid or the setpoint of a suction regulator. This sort of control integration has been accomplished by most control vendors, and is generally understood and addressed during the commissioning of floating suction pressure control. In addition, for suction groups serving walk-in boxes with evaporator fan speed control, the control automation would need to prioritize fan speed reduction *before* allowing suction temperature to float.

Mechanical Subcooling

This measure evaluates the cost-effectiveness of mechanical subcooling for the low temperature parallel compressor systems. Mechanical subcooling involves cooling the liquid refrigerant after it has been condensed, using capacity from a higher-temperature compressor group or by using a built-

in economizer port, which are common on low temperature scroll and screw compressors in the size ranges typically employed in supermarkets.

For each of the refrigeration system configurations, mechanical subcooling of the low-temperature suction group(s) was assumed to be accomplished by a medium-temperature group, with the exception of distributed systems, which were assumed to employ scroll compressor economizer ports. A two psi liquid pressure drop was assumed in the subcooler, and 5°F of heat gain was assumed in the subcooled liquid line between the compressor system and the cases or walk-ins. Both the Baseline case and the measure simulation assumed floating head pressure control of the condenser fans, with a 70°F minimum condensing temperature, ambient-following SCT control logic, and variable-speed condenser fans.

4.1.5 Analysis results by climate zone

The mechanical subcooling measure was evaluated for all system types and in all climate zones. Figure 21 below summarizes the simulation results for the mechanical subcooling measure:

	Energy Savings (kWh)	Energy Savings/ SF (kWh)	TDV Cost Savings ($)	TDV Cost Savings /SF ($)	Measure Cost plus Maintenance Cost ($)	Benefit/ Cost Ratio
SXX Average	9,012	0.57	$18,543	$1.17	$4,475	4.14
MXX Average	25,483	0.43	$53,461	$0.90	$7,973	6.71
LXX Average	65,849	0.41	$137,909	$0.85	$14,221	9.70
XAX Average	26,748	0.37	$64,115	$0.87	$8,694	7.37
XEX Average	26,739	0.37	$51,989	$0.71	$9,673	5.37
XFX Average	43,502	0.62	$84,818	$1.20	$8,694	9.76

All Average						
CTZ01 - Arcata	28,837	0.41	$54,668	$0.772	$8,890	6.15
CTZ03 – Oakland	29,735	0.42	$58,467	$0.815	$8,890	6.58
CTZ05 – Santa Maria	29,532	0.42	$57,315	$0.800	$8,890	6.45
CTZ07 – San Diego	31,193	0.44	$62,173	$0.866	$8,890	6.99
CTZ08 - Fullerton	32,359	0.46	$66,352	$0.946	$8,890	7.46
CTZ10 – Riverside	34,136	0.48	$74,327	$1.025	$8,890	8.36
CTZ12 – Sacramento	33,135	0.46	$72,075	$0.996	$8,890	8.11
CTZ13 – Fresno	35,542	0.49	$77,962	$1.076	$8,890	8.77
CTZ14 – Palmdale	34,923	0.48	$75,368	$1.036	$8,890	8.48
CTZ15 – Palm Springs	45,087	0.62	$101,004	$1.397	$8,890	11.36

Maximum	114,292	0.87	$259,844	$2.341	$15,793	20.85
Minimum	4,006	0.14	$7,645	$0.255	$4,220	1.81

Figure 21: Statewide savings results for mechanical subcooling measure

The analysis shows that mechanical subcooling is cost-effective for all system configurations and in all climate zones.

The proposed code requirement consists of mandatory liquid subcooling for low temperature parallel compressor systems, maintained continuously at 50°F or less at the exit of the subcooler, using compressor economizer port(s) or a separate parallel suction group operating at medium or high temperature conditions. Exceptions will apply to: single-compressor systems since these may often employ compressors without economizers (i.e. reciprocating) and be remotely located from other systems, and cascade systems since the condensing temperature is already at a much lower temperature.

Display Case Lighting Control

This measure evaluates the cost-effectiveness of automatic controls to turn off display case lights during non-business hours, and is applicable to stores that are not open 24 hours per day. Evaluation of this measure involves a Baseline modification of the assumed business and stocking hours (assumed to be 10 AM to 8 PM), which directly impact the simulated employee and customer schedules, lighting schedules, and case infiltration schedules. Display case lights are assumed always on in the Base Case, even for a non-24 hour store, which is typical for as significant fraction of supermarkets.

4.1.6 Analysis results by climate zone

The display case lighting control measure was evaluated for all system types and in all climate zones. Figure 22 summarizes the simulation results for the display case lighting control measure:

	Energy Savings (kWh)	Energy Savings/ SF (kWh)	TDV Cost Savings ($)	TDV Cost Savings /SF ($)	Measure Cost plus Maintenance Cost ($)	Benefit/ Cost Ratio
SXX Average	49,627	3.13	$69,134	$4.36	$5,588	12.37
MXX Average	149,814	2.52	$219,138	$3.68	$11,321	19.36
LXX Average	173,263	1.07	$265,992	$1.64	$12,659	21.01
XAX Average	122,362	2.21	$181,772	$3.18	$9,856	18.44
XEX Average	121,355	2.19	$180,092	$3.15	$9,856	18.27
XFX Average	127,547	2.29	$190,068	$3.31	$9,856	19.28
All Average						
CTZ01 - Arcata	121,760	2.20	$182,231	$3.189	$9,856	18.49
CTZ03 – Oakland	122,526	2.21	$181,454	$3.173	$9,856	18.41
CTZ05 – Santa Maria	122,016	2.20	$182,338	$3.183	$9,856	18.50
CTZ07 – San Diego	125,402	2.26	$189,148	$3.292	$9,856	19.19
CTZ08 - Fullerton	124,593	2.24	$184,423	$3.209	$9,856	18.71
CTZ10 – Riverside	124,596	2.24	$182,220	$3.174	$9,856	18.49

CTZ12 – Sacramento	123,529	2.22	$184,090	$3.210	$9,856	18.68
CTZ13 – Fresno	125,199	2.26	$187,412	$3.293	$9,856	19.01
CTZ14 – Palmdale	124,213	2.24	$182,442	$3.195	$9,856	18.51
CTZ15 – Palm Springs	128,513	2.31	$191,788	$3.356	$9,856	19.46

Maximum	185,047	3.29	$285,101	$4.623	$12,659	22.52
Minimum	47,749	1.02	$66,267	$1.552	$5,588	11.86

Figure 22: Statewide savings results for display case lighting control measure

The analysis shows that display case lighting control is cost-effective for all system configurations and in all climate zones.

The proposed code requirement consists of mandatory control for lighting in refrigeration display cases and lights in point-of-sale box doors in supermarkets, to automatically turn off lighting during non-business hours. Since display cases are often stocked at night or before store hours, the controls may include automatic or manual-enabled override intervals to allow for stocking. An exception is included for stores that are normally open for business 140 hours or more per week.

Prohibit Open Upright Frozen Food Cases

Low-temperature open upright display cases were compared with low temperature reach-in door doors to evaluate the savings associated with prohibiting the use of open upright low temperature cases. An equal length of open upright and reach-in display cases was compared; although this was a difference noted several years ago, no stakeholders commented that a greater length of glass doors was required to display or "face" the same amount of product.

Figure 23 shows the assumptions for line-up length (or number of doors), fan energy, lighting energy, infiltration assumptions, and anti-sweat heater wattage and controls (for the reach-in case) evaluated in this analysis.

	Open Upright Frozen Food Case	**Low-Temperature Reach-In Display Case with Doors**
Line-Up Length (or Number of Doors)	12 ft	13 ft (5 doors)
Cooling Capacity	17.8 MBH	6.85 MBH
Design Discharge Air Temperature	-5°F	-5°F
Design Saturated Suction Temperature	-22°F	-22°F
Lighting	Total shelf and canopy lights: 173 W	Total vertical door lighting: 369 W
Defrost Assumptions	Hot Gas Defrost, 2x22 minutes/day	Hot Gas Defrost, 1x20 minutes/day
Anti-Sweat Heater Assumptions	288 W Always on	269 W Always on

Figure 23: Analysis assumptions for both open and reach-in display cases

The energy savings was evaluated in CTZ12-Sacramento and only for the large supermarket prototype because the measure is not significant affected by climate zone or store size. Figure 24 shows the analysis results for this measure.

	Energy Savings (kWh)	Energy Savings/ SF (kWh)	TDV Cost Savings ($)	TDV Cost Savings /SF ($)
MAC	7,767	0.13	$19,481	$0.33
MAD	9,526	0.16	$22,311	$0.37
MEC	9,990	0.17	$22,116	$0.37
MFC	11,094	0.19	$25,017	$0.42
MFD	11,218	0.19	$25,017	$0.42
ALL Average	**9,919**	**0.17**	**$22,789**	**$0.38**

Figure 24: Analysis results for reach-in versus open upright frozen food cases

The incremental cost was assumed to be zero, since the two types of display cases have similar costs and the savings in compressor cost and refrigeration piping is easily greater than increased 120 V wiring costs (if any). With no associated incremental costs there is no calculation of benefit/cost ratio.

Stakeholder feedback for this measure was positive, with no situations identified that required the use of open upright low temperature cases in new store construction. Generally, these are rare in current design practice in California other than occasional small (12 to 20 ft.) line-ups of frozen meat, although at least one chain still used a 60-72 ft. line-up of open upright freezers as recently as three years ago.

The proposed code requirement consists of prohibiting open upright low temperature display cases.

Refrigeration Heat Recovery

This measure consists of using heat recovery from the refrigeration system for space heating.

Heat recovery from the refrigeration systems in supermarkets has been employed using many different methods over the past 50 years. Prior to the CFC phase-out, heat recovery provided the majority of heating requirements in most supermarkets. Many configurations can significantly increase refrigerant charge and winter-summer charge variation, generally resulting in greater annual refrigerant losses and associated costs—resulting in a decline in use of heat recovery to the point only a small amount of annual heating needs being met with heat recovery.

The configuration employed to evaluate this measure includes an indirect heat exchange loop, with water-cooled heat-recovery condensers (piped in series with the main condensers) and using a water loop to convey the heat to the air handler(s), rooftop units or unit heaters used to heat the store. A saturated condensing temperature holdback valve with a design holdback SCT of 95°F was assumed on the refrigerant-side of the water-cooled heat recovery condenser(s). Reclaim coils for each system type were sized to recover 65% of the available refrigeration system heat of rejection, with a design temperature difference of 30°F between the reclaim condensing temperature and the design return air temperature.

The baseline of comparison included floating head pressure to 70°F with variable-setpoint (ambient following) control logic and variable speed condenser fan control. The baseline assumes all space

heating in the main sales area is accomplished with natural gas furnaces. Figure 25 describes the heat reclaim assumptions utilized in the evaluation of this measure:

	Small Supermarket	Large Supermarket	Big-Box Food Store
Sales area HVAC system description	Packaged rooftop AC unit with EER per 2008 Title 24	Main air handling unit	Several packaged rooftop AC units with EERs per 2008 Title 24
Circulation pump power	1.5 HP	3 HP	10 HP

Figure 25: Simulation assumptions for heat reclaim measure

Energy analysis results

The refrigeration heat recovery measure for space heating was evaluated for all system types and in all climate zones. Figure 26 below summarizes the simulation results for the heat recovery measure:

	Energy Savings (kWh)	Energy Savings/ SF (kWh)	Natural Gas Savings (Therms)	Natural Gas Savings /SF (Therms)	TDV Cost Savings ($)	TDV Cost Savings /SF ($)	Measure Cost plus Maintenance Cost ($)
SXX Average	-15,885	-1.00	7,573	0.48	$126,510	$7.98	$21,396
MXX Average	-37,045	-0.62	26,572	0.45	$478,112	$8.03	$69,949
LXX Average	-94,772	-0.58	35,118	0.22	$540,915	$3.34	$88,378
XAX Average	-70,370	-1.10	23,006	0.38	$336,229	$5.68	$60,813
XEX Average	-53,986	-0.80	23,061	0.38	$371,734	$6.31	$57,021
XFX Average	-25,722	-0.34	23,183	0.38	$432,518	$7.29	$60,446
All Average							
CTZ01 - Arcata	-53,400	-0.78	43,977	0.69	$771,752	$12.35	$59,908
CTZ03 – Oakland	-48,367	-0.70	31,436	0.50	$545,607	$8.88	$59,908
CTZ05 – Santa Maria	-49,166	-0.71	33,001	0.53	$568,282	$9.20	$59,908
CTZ07 – San Diego	-41,375	-0.59	17,696	0.31	$284,389	$5.27	$59,908
CTZ08 - Fullerton	-46,948	-0.73	16,646	0.32	$256,694	$5.28	$59,908
CTZ10 – Riverside	-49,868	-0.75	16,704	0.28	$257,436	$4.39	$59,908
CTZ12 – Sacramento	-53,112	-0.80	23,756	0.39	$399,091	$6.60	$59,908
CTZ13 – Fresno	-50,693	-0.77	19,960	0.33	$331,549	$5.52	$59,908
CTZ14 – Palmdale	-56,213	-0.86	21,598	0.35	$358,692	$5.91	$59,908
CTZ15 – Palm Springs	-43,199	-0.67	6,096	0.11	$44,962	$1.07	$59,908
Maximum	84,118	1.41	72,907	0.86	$1,329,152	$18.95	$95,545
Minimum	-150,070	-1.93	2,250	0.05	-$8,260	$(0.05)	$20,926

Figure 26: Energy savings results for heat recovery measure by climate zone

Refrigerant analysis results

The proposed reach-code requirement for this measure is at least 25% of the design refrigeration heat of rejection utilized for space heating, while increasing the refrigerant charge by no greater than 0.35 lbs per 1,000 BTU/Hr of heating capacity, whichever is less. Assuming the worst case impact on R-404A/R-507 refrigerant charge, Figure 27 summarizes the results of this analysis in terms of refrigerant emissions in pounds. Note that refrigerant emissions are assumed to be independent of the design climate zone.

	Annual Refrigerant Savings (Range)	
	Pounds	
	Low	**High**
SXX Average	-14	-9
MXX Average	-46	-29
LXX Average	-74	-46
XAX Average	-44	-27
XEX Average	-60	-40
XFX Average	-38	-23
All Average	-45	-28

Figure 27: Refrigerant analysis results for heat recovery measure

GHG analysis results

Figure 28 below summarizes the net impact of this measure on GHG emissions. As shown, when accounting for worst case impacts on a system's refrigerant charge, this measure has inconsistent overall benefits to the environment in terms of GHG emissions. In some climate zones (i.e., CTZ01, CTZ03, and CTZ05) where natural gas savings are greatest, the overall impact on GHG emissions is more favorable, while in other climate zones (i.e., CTZ15), the overall impact on GHG emissions is on average negative.

	Annual Refrigerant Savings (Range)		**Annual Energy Savings**	**Net Annual Savings (Range)**	
	$MTCO_2eq$		**$MTCO_2eq$**	**$MTCO_2eq$**	
	Low	**High**		**Low**	**High**
SXX Average	-25	-16	35	10	19
MXX Average	-83	-52	131	48	79
LXX Average	-134	-83	154	20	71
XAX Average	-79	-48	97	18	49
XEX Average	-107	-71	104	-2	33
XFX Average	-69	-42	117	48	75

All Average					
CTZ01 - Arcata	-81	-50	219	139	169
CTZ03 – Oakland	-81	-50	153	72	102
CTZ05 – Santa Maria	-81	-50	161	80	111
CTZ07 – San Diego	-81	-50	80	0	30
CTZ08 - Fullerton	-81	-50	72	-8	22
CTZ10 – Riverside	-81	-50	71	-9	21
CTZ12 – Sacramento	-81	-50	109	28	58
CTZ13 – Fresno	-81	-50	89	8	39
CTZ14 – Palmdale	-81	-50	95	15	45
CTZ15 – Palm Springs	-81	-50	16	-65	-34

Maximum Net Savings Across All Store Simulations	284	326
Minimum Net Savings Across All Store Simulations	-167	-109

Figure 28: GHG analysis results for heat recovery measure

Savings analysis results

Figure 29 summarizes the net impacts of this measure on lifetime costs. Note that the energy cost savings and refrigerant cost savings account for the monetized GHG impacts associated with energy consumption and refrigerant emissions, based on the CEC price forecasts for annual carbon costs.

	Measure/ Maintenance Cost ($)	Refrigerant Cost Savings Range ($)		TDV Energy Cost Savings ($)	Net Lifetime Savings Range ($)		Benefit/Cost Ratio Range ($)	
		Low	High		Low	High	Low	High
SXX Average	$21,396	-$14,669	-$9,113	$126,510	$90,445	$96,001	3.51	4.15
MXX Average	$69,949	-$47,689	-$29,780	$478,112	$360,475	$378,383	4.06	4.79
LXX Average	$88,378	-$77,049	-$47,945	$540,915	$375,488	$404,592	3.27	3.97
XAX Average	$60,813	-$45,704	-$27,802	$336,229	$229,712	$247,614	3.16	3.79
XEX Average	$57,021	-$61,649	-$41,099	$371,734	$253,064	$273,613	3.13	3.79
XFX Average	$60,446	-$39,644	-$24,014	$432,518	$332,428	$348,059	4.32	5.12

All Average								
CTZ01 - Arcata	$59,908	-$46,469	-$28,946	$771,752	$665,375	$682,898	7.25	8.69
CTZ03 – Oakland	$59,908	-$46,469	-$28,946	$545,607	$439,230	$456,753	5.13	6.14
CTZ05 – Santa Maria	$59,908	-$46,469	-$28,946	$568,282	$461,906	$479,429	5.34	6.40
CTZ07 – San Diego	$59,908	-$46,469	-$28,946	$284,389	$178,013	$195,536	2.67	3.20
CTZ08 - Fullerton	$59,908	-$46,469	-$28,946	$256,694	$150,318	$167,841	2.41	2.89
CTZ10 – Riverside	$59,908	-$46,469	-$28,946	$257,436	$151,060	$168,583	2.42	2.90

CTZ12 – Sacramento	$59,908	-$46,469	-$28,946	$399,091	$292,714	$310,237	3.75	4.49
CTZ13 – Fresno	$59,908	-$46,469	-$28,946	$331,549	$225,172	$242,695	3.12	3.73
CTZ14 – Palmdale	$59,908	-$46,469	-$28,946	$358,692	$252,315	$269,838	3.37	4.04
CTZ15 – Palm Springs	$59,908	-$46,469	-$28,946	$44,962	-$61,414	-$43,891	0.42	0.51

Maximum Net Savings Across All Store Simulations	$1,170,124	$1,194,633	9.09	10.95
Minimum Net Savings Across All Store Simulations	-$189,511	-$156,960	-	-

Figure 29: Cost savings results for heat recovery measure

The analysis shows that, on average, heat recovery is cost-effective for all system configurations across all climate zones. However, in Palm Springs, the hottest climate zone, it is not cost-effective for all store types and system configurations. Figure 30 provides a summary of analysis results for Palm Springs.

	Energy Savings (kWh)	Natural Gas Savings (Therms)	Average Refrigerant Savings (pounds)	TDV Electric Cost Savings ($)	TDV Gas Cost Savings ($)	TDV Total Cost Savings ($)	Average Refrigerant Cost Savings ($)	Measure Cost plus Maintenance Cost ($)
SAC	-14,987	2,250	-15	-$32,539	$51,689	$19,150	-$15,292	$20,926
SAD	-15,793	2,250	-8	-$33,933	$51,689	$17,756	-$7,774	$23,202
SEC	-15,409	2,250	-15	-$33,220	$51,677	$18,457	-$15,717	$20,926
SFC	-10,655	2,251	-13	-$24,154	$51,726	$27,572	-$13,452	$20,926
SFD	-10,901	2,251	-7	-$24,265	$51,726	$27,461	-$7,222	$21,000
MAC	-48,067	8,532	-50	-$105,335	$194,802	$89,467	-$51,823	$66,536
MAD	-51,536	8,532	-23	-$110,844	$194,802	$83,958	-$24,043	$75,068
MEC	-47,445	8,529	-53	-$102,926	$194,728	$91,802	-$54,159	$66,536
MFC	-25,995	8,538	-41	-$61,800	$194,949	$133,148	-$42,408	$66,536
MFD	-26,917	8,538	-21	-$61,455	$194,949	$133,494	-$21,240	$75,068
LAC	-83,699	7,502	-78	-$181,108	$172,848	-$8,260	-$81,376	$83,600
LAD	-81,478	7,499	-39	-$176,625	$172,775	-$3,850	-$40,210	$95,545
LEC	-81,558	7,502	-81	-$177,216	$172,848	-$4,368	-$84,247	$83,600
LFC	-67,603	7,507	-67	-$151,067	$172,983	$21,916	-$69,889	$83,600
LFD	-65,948	7,506	-35	-$146,216	$172,946	$26,731	-$36,764	$95,545
SXX Average	-13,549	2,250	-12	-$29,622	$51,702	$22,079	-$11,891	$21,396
MXX Average	-39,992	8,534	-38	-$88,472	$194,846	$106,374	-$38,734	$69,949
LXX Average	-76,057	7,503	-60	-$166,447	$172,880	$6,434	-$62,497	$88,378
XAX Average	-49,260	6,094	-35	-$106,731	$139,768	$33,037	-$36,753	$60,813
XEX Average	-48,137	6,094	-50	-$104,454	$139,751	$35,297	-$51,374	$57,021
XFX Average	-34,670	6,099	-31	-$78,159	$139,880	$61,720	-$31,829	$60,446

ALL Average	-43,199	6,096	-36	-$94,847	$139,809	$44,962	-$37,708	$59,908

Figure 30: Heat recovery cost savings results for CTZ15 – Palm Springs

The proposed code requirement consists of mandatory heat recovery from refrigeration system(s) for space heating.

There are a multitude of combinations between refrigeration systems types, HVAC system types and configurations, store sizes and new construction project types. To allow sufficient flexibility that heat recovery can be accomplished as a mandatory measure, the code will only require a minimum 25% of the design refrigeration heat of rejection to be utilized for space heating. Since refrigerant leakage and cost is also an important concern (the sole reason for a dramatic reduction in the use of heat recovery over the two decades), a restriction on refrigerant charge is also included, specifically limiting the refrigerant charge increase to no greater than 0.35 lbs per 1,000 BTU/Hr of heating capacity, whichever is less. The cost assumptions for this measure allowed for construction methods (e.g. indirect water loop) that would readily meet the charge limitation.

Based on the analysis results, it is also recommended that climate zone 15 be excluded from this requirement.

CO_2 Secondary (indirect) or Cascade Cooling

Reduction of HFC refrigerant charge, leakage rates, and the attendant high direct greenhouse gas emissions are very important topics to the supermarket industry as well as a primary objective in California, resulting from legislation that directs the California Air Resources Board to take "early action" to reduce hydrofluorocarbon (HFC) emissions. A clear and immediate option, although still somewhat nascent in the US compared with other countries, is the use of carbon dioxide (CO_2) as the cooling fluid in the display cases and walk-in evaporator coils. In this configuration, there is no HFC refrigerant in the store; HFCs are limited to the compressor package (essentially a CO_2 chiller) and the condenser. Systems may or may not use CO_2 compressors. A system that simply circulates phase-change CO_2 and uses HFC compressors for cooling is termed a secondary or indirect system. A system that uses CO_2 compressors for low temperature loads is termed a cascade system. Either system accomplishes similar results in terms of GHG reduction with generally similar efficiencies.

4.1.7 Analysis Results

The large and small supermarket prototypes were utilized to evaluate this measure.

Energy Analysis Results

The energy impact from using CO_2 as the cooling fluid in both pump-recirculated indirect and cascade condensing configurations was determined to be negligible (See Appendix H for energy analysis results).

Refrigerant Analysis Results

When savings associated with reduced R-404A/R-507 refrigerant leakage are accounted for, significant environmental benefits are observed in secondary (indirect) cooling systems. Figure 31 shows the refrigerant emissions in terms of both pounds of refrigerant as well as equivalent metric tons of CO_2 emissions.

	Annual Refrigerant Savings (Range)			
	Pounds		$MTCO_2eq$	
	Low	High	Low	High
Small Supermarket	69	93	122	166
Large Supermarket	346	468	615	832
Average	207	280	369	499

Figure 31: Carbon savings results for indirect cooling measure

GHG analysis results

Figure 32 summarizes the net impact of this measure on GHG emissions. Since the measure has no impact on energy consumption, only the reduction of refrigerant emissions in terms of metric tons CO_2 equivalent is shown below.

	Annual Refrigerant Savings (Range)	
	$MTCO_2eq$	
	Low	High
Small Supermarket	122	166
Large Supermarket	615	832
Average	369	499

Figure 32: GHG analysis results for indirect cooling measure

Figure 33 summarizes the net impact of this measure on lifetime costs. Note that the energy cost savings and refrigerant cost savings account for the monetized GHG impacts associated with energy consumption and refrigerant emissions, based on the CEC price forecasts for annual carbon costs. Since this measure has no impact on energy consumption, energy cost savings is assumed to be zero. Note that refrigerant charge and leak rate reductions are assumed to be independent of the design climate zone.

	Measure/ Maintenance Cost ($)	Refrigerant Cost Savings Range ($)		TDV Energy Cost Savings ($)	Net Lifetime Savings Range ($)		Benefit/Cost Ratio Range ($)	
		Low	High		Low	High	Low	High
Small Supermarket	$50,000	$70,643	$95,690	$0	$20,643	$45,690	1.41	1.91
Large Supermarket	$120,000	$355,174	$480,615	$0	$235,174	$360,615	2.96	4.01

Figure 33: Cost savings results for indirect cooling measure

This measure results in significant GHG emissions savings for both prototypes, and economic analysis shows that this measure is cost-effective.

The proposed Reach code requirement consists of using CO_2 for cooling of display cases and walk-ins. Secondary (indirect) cooling and/or cascade cooling would meet this requirement.

4.1.8 Use of Glycol for MT Systems as an Exception to CO_2

Stakeholders responded that they would like an option to use glycol as the heat transfer fluid for medium-temperature loads. However, analysis indicated that glycol indirect systems were not cost-effective compared to direct-expansion systems; equipment costs and the cost from increased energy consumption outweighed the economic benefits of reducing refrigerant charge and leak rates. Additional analysis was performed to determine if the increased energy consumption could be offset with variable-speed glycol pump control and variable-speed walk-in cooling coil fan control. A full description of the analysis methodology is presented in Appendix H.

Figure 34 summarizes the net impact on lifetime costs for glycol indirect systems with variable speed enhancements versus direct expansion for medium-temperature loads. Note that the energy cost savings and refrigerant cost savings account for the monetized GHG impacts associated with energy consumption and refrigerant emissions, based on the CEC price forecasts for annual carbon costs.

	Measure Cost ($)	Refrigerant Cost Savings Range ($)		TDV Cost Savings ($)	Net Lifetime Savings Range ($)		Benefit/Cost Ratio Range ($)	
		Low	High		Low	High	Low	High
CTZ01 - Arcata	$120,000	$355,174	$480,615	-$102,827	$132,347	$257,788	1.59	2.16
CTZ03 – Oakland	$120,000	$355,174	$480,615	-$96,722	$138,452	$263,893	1.64	2.22
CTZ05 – Santa Maria	$120,000	$355,174	$480,615	-$98,217	$136,957	$262,398	1.63	2.20
CTZ07 – San Diego	$120,000	$355,174	$480,615	-$88,409	$146,764	$272,205	1.70	2.31
CTZ08 - Fullerton	$120,000	$355,174	$480,615	-$135,916	$99,258	$224,699	1.39	1.88
CTZ10 – Riverside	$120,000	$355,174	$480,615	-$148,847	$86,327	$211,768	1.32	1.79
CTZ12 – Sacramento	$120,000	$355,174	$480,615	-$148,242	$86,932	$212,373	1.32	1.79
CTZ13 – Fresno	$120,000	$355,174	$480,615	-$154,027	$81,147	$206,588	1.30	1.75
CTZ14 – Palmdale	$120,000	$355,174	$480,615	-$155,780	$79,394	$204,835	1.29	1.74
CTZ15 – Palm Springs	$120,000	$355,174	$480,615	-$171,586	$63,588	$189,029	1.22	1.65
All Average	$120,000	$355,174	$480,615	-$130,057	$105,115	$230,557	1.42	1.92

Figure 34: Cost savings results for indirect measure with glycol

The use of glycol as a secondary cooling fluid for MT loads is assumed to result in the same reduction in refrigerant emissions as CO_2, and the variable-speed glycol pump and cooling coil fan control enhancements mitigate the resultant increase in energy consumption, sufficient to result in a benefit/cost ratio greater than 1 for all climate zones.

The proposed Reach code requirement of using CO_2 secondary (indirect) cooling for display cases and walk-ins includes an exception that allows glycol to be used for medium-temperature loads, so long as the following requirements are met:

a. Glycol supply pump(s) are required to be equipped with variable speed drives controlled based on glycol loop pressure differential

b. Two-way (no bypass) type control valves are installed at the walk-in cooling coils and display cases

c. Variable speed control is utilized on walk-in cooling coil fans, utilizing speed control as primary temperature control before cycling glycol supply valves, with a minimum fan speed no greater than 70%

Statewide Energy Savings Estimates

The total statewide energy savings for the following base code measures are provided in this section:

- Floating head pressure
- Condenser specific efficiency
- Floating suction pressure
- Mechanical subcooling
- Display case lighting control
- Refrigeration heat recovery

As described in Section 0, the energy savings by prototype are calculated by multiplying the per SF energy savings with the appropriate 2014 supermarket new construction SF. Results are presented in Figure 35, Figure 36, and Figure 37, below.

Small Supermarkets		Energy Savings (kWh)						Gas Savings (Therms)
CZ	Supermarket new construction SF	Floating Head Pressure	Condenser Specific Efficiency	Floating Suction Pressure	Mechanical Subcooling	Display Case Lighting Control	Refrigeration Heat Recovery	Refrigeration Heat Recovery
1	1,680	2,889	75	864	871	5,170	(1,755)	1,072
2	10,876	18,705	484	5,592	5,637	33,474	(11,361)	6,942
3	33,848	58,216	1,507	17,403	17,544	104,180	(35,360)	21,606
4	26,964	46,377	1,200	13,864	13,976	82,993	(28,168)	17,212
5	5,236	9,005	233	2,692	2,714	16,114	(5,469)	3,342
6	45,268	77,858	2,015	23,275	23,463	139,329	(47,289)	28,895
7	62,712	107,859	2,791	32,243	32,504	193,018	(65,512)	40,030
8	55,408	89,431	6,295	29,812	31,610	173,798	(54,156)	18,685
9	119,205	192,402	13,543	64,137	68,006	373,912	(116,512)	40,198
10	34,625	55,886	3,934	18,630	19,753	108,609	(33,843)	11,676
11	20,504	34,543	1,980	10,791	11,459	63,703	(21,180)	9,763
12	80,160	135,044	7,741	42,187	44,798	249,046	(82,804)	38,169
13	44,400	74,799	4,288	23,367	24,813	137,943	(45,864)	21,141
14	8,416	14,179	813	4,429	4,704	26,149	(8,694)	4,008
15	2,994	5,044	289	1,576	1,673	9,302	(3,093)	1,426
16	9,882	16,648	954	5,201	5,523	30,702	(10,208)	4,705
Total	562,177	938,883	48,141	296,060	309,049	1,747,442	(571,269)	268,869

Figure 35: Annual Statewide Energy Savings – Small Supermarket Prototype

Large Supermarkets		Energy Savings (kWh)						Gas Savings (Therms)
CZ	Supermarket new construction SF	Floating Head Pressure	Condenser Specific Efficiency	Floating Suction Pressure	Mechanical Subcooling	Display Case Lighting Control	Refrigeration Heat Recovery	Refrigeration Heat Recovery
1	7,740	12,704	419	4,229	2,848	19,141	(3,537)	4,764
2	50,113	82,259	2,716	27,381	18,440	123,936	(22,902)	30,846
3	155,969	256,015	8,452	85,218	57,390	385,727	(71,277)	96,004
4	124,249	203,949	6,733	67,887	45,718	307,281	(56,781)	76,479
5	24,125	39,599	1,307	13,181	8,877	59,663	(11,025)	14,849
6	208,590	342,391	11,304	113,969	76,752	515,866	(95,325)	128,394
7	288,967	474,327	15,660	157,885	106,328	714,647	(132,057)	177,868
8	255,312	403,161	31,450	144,724	112,578	642,129	(184,415)	87,340
9	549,281	867,366	67,663	311,361	242,201	1,381,485	(396,754)	187,905
10	159,547	251,940	19,654	90,440	70,351	401,274	(115,243)	54,580
11	94,480	155,067	9,929	54,174	40,244	235,959	(72,340)	42,943
12	369,367	606,232	38,816	211,793	157,334	922,477	(282,811)	167,887
13	204,587	335,784	21,500	117,309	87,145	510,948	(156,645)	92,990
14	38,782	63,652	4,075	22,237	16,519	96,856	(29,694)	17,627
15	13,797	22,644	1,450	7,911	5,877	34,456	(10,564)	6,271
16	45,535	74,735	4,785	26,109	19,396	113,721	(34,864)	20,697
Total	2,590,440	4,191,826	245,913	1,455,809	1,067,996	6,465,565	(1,676,234)	1,207,445

Figure 36: Annual Statewide Energy Savings – Large Supermarket Store

Big Box Food Store		Energy Savings (kWh)						Gas Savings (Therms)
CZ	Supermarket new construction SF	Floating Head Pressure	Condenser Specific Efficiency	Floating Suction Pressure	Mechanical Subcooling	Display Case Lighting Control	Refrigeration Heat Recovery	Refrigeration Heat Recovery
1	5,326	4,235	111	1,551	1,921	5,584	(3,408)	1,716
2	34,487	27,422	719	10,043	12,438	36,159	(22,065)	11,111
3	107,335	85,347	2,238	31,256	38,710	112,538	(68,674)	34,580
4	85,506	67,990	1,783	24,899	30,837	89,650	(54,707)	27,548
5	16,602	13,201	346	4,835	5,987	17,407	(10,622)	5,349
6	143,548	114,141	2,993	41,801	51,770	150,506	(91,843)	46,247
7	198,862	158,124	4,146	57,909	71,719	208,501	(127,234)	64,068
8	175,701	129,445	7,502	55,598	72,728	188,886	(98,726)	26,437
9	378,006	278,489	16,141	119,615	156,468	406,372	(212,400)	56,877
10	109,798	80,892	4,688	34,744	45,449	118,037	(61,695)	16,521
11	65,019	50,705	2,338	20,094	26,141	69,226	(39,049)	14,701
12	254,192	198,229	9,141	78,558	102,199	270,638	(152,662)	57,474
13	140,794	109,796	5,063	43,512	56,607	149,903	(84,558)	31,834
14	26,689	20,813	960	8,248	10,730	28,416	(16,029)	6,035
15	9,495	7,404	341	2,934	3,817	10,109	(5,702)	2,147
16	31,336	24,437	1,127	9,684	12,599	33,364	(18,820)	7,085
Total	1,782,698	1,370,670	59,638	545,282	700,120	1,895,296	(1,068,195)	409,730

Figure 37: Annual Statewide Energy Savings – Big Box Food Store

The total annual statewide energy savings for all prototypes are shown in Figure 38:

Sum of all building sizes		Energy Savings (kWh)						Gas Savings (Therms)
CZ	**Supermarket New construction SF**	**Floating Head Pressure**	**Condenser Specific Efficiency**	**Floating Suction Pressure**	**Mechanical Subcooling**	**Display Case Lighting Control**	**Refrigeration Heat Recovery**	**Refrigeration Heat Recovery**
1	14,745	19,828	605	6,643	5,639	29,895	(8,699)	7,552
2	95,476	128,386	3,919	43,015	36,514	193,568	(56,328)	48,899
3	297,152	399,579	12,197	133,877	113,644	602,445	(175,310)	152,190
4	236,719	318,315	9,716	106,650	90,532	479,924	(139,657)	121,238
5	45,962	61,805	1,887	20,707	17,578	93,183	(27,116)	23,540
6	397,406	534,390	16,312	179,045	151,985	805,701	(234,457)	203,536
7	550,541	740,310	22,597	248,037	210,551	1,116,166	(324,802)	281,966
8	486,421	622,036	45,247	230,134	216,916	1,004,813	(337,297)	132,462
9	1,046,493	1,338,257	97,346	495,113	466,675	2,161,770	(725,666)	284,981
10	303,970	388,718	28,276	143,814	135,553	627,920	(210,781)	82,777
11	180,003	240,314	14,247	85,059	77,844	368,888	(132,569)	67,408
12	703,719	939,505	55,698	332,538	304,331	1,442,161	(518,278)	263,529
13	389,781	520,379	30,851	184,188	168,565	798,793	(287,067)	145,965
14	73,888	98,644	5,848	34,915	31,953	151,421	(54,417)	27,669
15	26,285	35,092	2,080	12,421	11,367	53,867	(19,359)	9,843
16	86,753	115,820	6,866	40,995	37,517	177,787	(63,892)	32,487
Total	4,935,315	6,501,379	353,693	2,297,151	2,077,165	10,108,302	(3,315,697)	1,886,044

Figure 38: Annual Statewide Energy Savings – All Average of Prototypes

The resulting total annual statewide energy savings by measure are presented in Figure 39:

Measure	Energy Savings (GWh)	Gas Savings (MMT)
Floating Head Pressure	6.50	--
Condenser Specific Efficiency	0.35	--
Floating Suction Pressure	2.30	--
Mechanical Subcooling	2.08	--
Display Case Lighting Control	10.11	--
Refrigeration Heat Recovery	-3.32	1.89
Total	18.02	1.89

Figure 39: Annual Statewide Energy Savings by Measures

Equipment Rating Accuracy, Standards and Certification

Currently, the equipment performance requirements in this standard are defined without the benefit or use of rating standards (e.g. AHRI, ASHRAE) or certification of manufacturers' data. Whereas today most air conditioning equipment is rated to common standards and independently

certified, this is generally not the case for refrigeration condensers, evaporators and some compressors. The data provided in manufacturers' catalogs was relied upon in the development of this CASE report. Of course manufacturers' information will be used by owners and engineers to determine compliance with code requirements. As a result, the minimum performance requirements derived herein are necessarily somewhat conservative, as well as reflecting rather general assumptions regarding the facts and characteristics of how actual equipment operates compared to catalog values.

Requiring equipment ratings to be published in accordance with common standards and requiring certification of these ratings was considered by the CASE authors and discussed in detail with stakeholders. Existing test and rating standards that might be used were considered, along with the real-world application considerations that would affect standards and application of equipment. The conclusion was that considerable work was required to develop appropriate standards and that equipment data would likely change substantially (to a greater extent for smaller equipment). These facts, along with the costs of labs, testing and product line changes would impose a large cost on industry. Considering these facts, it was determined that the proposed code requirements could be reasonably undertaken with the existing "state of the art" concerning performance data, as long as the level of stringency was carefully moderated.

Throughout the development of this CASE report, stakeholders often noted support for prospective test standards and certification for the subject equipment. Equipment designed and rated to common standards would be beneficial to manufacturers and end-users of the equipment by creating a "level playing field", allowing better system design and ultimately leading to greater system efficiency and greater trust in performance values, ultimately reduced first costs through system right sizing. Future code minimum performance requirements and cost-effectiveness could certainly be more refined and exacting. Perhaps most importantly, standard ratings would be a first step towards performance definitions sufficient for a Performance Compliance Option, which industry stakeholders have noted should be available for supermarket refrigeration.

Continued work is recommended to support development of the relevant equipment standards and methods to allow consideration in the next code cycle.

5. Recommended Code Language

Section 5 presents the proposed code language additions to Title 24, Section 127 for Supermarket Refrigeration, and Supermarket Refrigeration Acceptance Testing to Non-residential Appendix NA-127, plus amendments to Section 101-Definitions, and Title 24 Part 11- California Green Building Standards Code.

New proposed language is underlined.

Title 24 Draft Code Language

SECTION 101 – DEFINITIONS

BUBBLE POINT is the refrigerant liquid saturation temperature at a specified pressure.

COOLER is a space greater than or equal to 28°F but less than 55°F.

DEW POINT is the refrigerant vapor saturation temperature at a specified pressure.

CONDENSER SPECIFIC EFFICIENCY is the condenser Total Heat of Rejection (THR) capacity divided by the input electric power at 100 percent fan speed (including spray pump electric input power for evaporative condensers) at standard conditions.

FREEZER is a space designed to maintain less than 28°F and space designed to be convertible between cooler and freezer operation.

GLOBAL WARMING POTENTIAL or "GWP" means the radiative forcing impact of one mass-based unit of a given greenhouse gas relative to an equivalent unit of carbon dioxide over a given period of time.

GLOBAL WARMING POTENTIAL VALUE or "GWP Value" means the 100-yr GWP value first published by the Intergovernmental Panel on Climate Change (IPCC) in its Second Assessment Report (SAR) (IPCC, 1995; or if a 100-yr GWP value was not specified in the IPCC SAR, it means the GWP value published by the IPCC in its Fourth Assessment A-3 Report (AR4) (IPCC, 2007); or if a 100-yr GWP value was not specified in the IPCC AR4, then the GWP value will be determined by the Commission based on data, studies and/or good engineering or scientific judgment. Both the 1995 IPCC SAR values and the 2007 IPCC AR4 values are published in table 2.14 of the 2007 IPCC AR4. The SAR GWP values are found in column "SAR (100-yr)" of Table 2.14.; the AR4 GWP values are found in column "100 yr" of Table 2.14."

LOW-GWP REFRIGERANT means a compound used as a heat transfer fluid or gas that is: (A) any compound or blend of compounds, with a GWP Value less than 150; and (B) U.S. EPA Significant New Alternatives Policy (SNAP)-approved; and (C) not an ozone depleting substance as defined in Title 40 of the Code of Federal Regulations, Part 82, §82.3 (as amended March 10, 2009).

MICRO-CHANNEL CONDENSER is an air-cooled condenser for refrigeration systems which utilizes multiple small parallel gas flow passages in a flat configuration with unitized fin surface between the gas passages, rather than round tubes arranged at a right angle to separate plate fins.

SATURATED CONDENSING TEMPERATURE (CONDENSING TEMPERATURE) is the saturation temperature corresponding to the refrigerant pressure at the condenser entrance for single component and azeotropic refrigerants. For zeotropic refrigerants, the arithmetic average of the Dew Point and Bubble Point temperatures corresponding to the refrigerant pressure at the condenser entrance.

TOTAL HEAT OF REJECTION (THR) is the heat rejected by refrigeration system compressors at design conditions, consisting of the design cooling capacity plus the heat of compression added by the compressors.

SECTION 127 – MANDATORY REQUIREMENTS FOR SUPERMARKET REFRIGERATION

Retail food stores with 8,000 square feet or more of conditioned area or more, and that utilize either refrigerated display cases, or walk-in coolers or freezers connected to remote compressor units or condensing units, shall meet the requirements of this section.

(a) **Condensers**. Fan-powered condensers shall conform to the following requirements.

1. All condenser fans for air-cooled condensers, evaporative-cooled condensers, air- or water-cooled fluid coolers or cooling towers shall be continuously variable speed, with the speed of all fans serving a common condenser high side controlled in unison.
2. The refrigeration system condenser controls for systems with air-cooled condensers shall use variable-setpoint control logic to reset the condensing temperature setpoint in response to ambient drybulb temperature.
3. The refrigeration system condenser controls for systems with evaporative-cooled condensers shall use variable-setpoint control logic to reset the condensing temperature setpoint in response to ambient wetbulb temperature.

EXCEPTION to Section 127 (a) 2 and 3: Condensing temperature control strategies approved by the Executive Director that have been demonstrated to provide equal energy savings

4. The minimum condensing temperature setpoint shall be less than or equal to 70°F.
5. Fan-powered condensers shall meet the specific efficiency requirements listed in Table 127-A:

TABLE 127-A - FAN-POWERED CONDENSERS –SPECIFIC EFFICIENCY REQUIREMENTS

Condenser Type	Minimum Specific Efficiency [a]	Rating Condition
Evaporative-Cooled	160 (Btu/h)/W	100°F Saturated Condensing Temperature (SCT), 70°F Entering Wetbulb Temperature
Air-Cooled	65 (Btu/h)/W	105°F Saturated Condensing Temperature (SCT), 95°F Entering Drybulb Temperature
[a] See section 101 for definition of condenser specific efficiency		

EXCEPTION 1 to Section 127 (a) 5: Condensers with a THR capacity of less than 150 MBH at the specific efficiency rating condition.

EXCEPTION 2 to Section 127 (a) 5: Stores located in Climate Zone CTZ01.

EXCEPTION 3 to Section 127 (a) 5: Existing condensers that are reused for an expansion or remodel.

6. Air-cooled condensers shall have a fin density no greater than 10 fins per inch.

EXCEPTION 1 to Section 127 (a) 6: Micro-channel condensers.

EXCEPTION 2 to Section 127 (a) 6: Existing condensers that are reused for an expansion or remodel.

(b) Compressor Systems. Refrigeration compressor systems and condensing units shall conform to the following requirements.

1. Compressors and multiple-compressor suction groups shall include control systems that use floating suction pressure logic to reset the target saturated suction temperature based on the temperature requirements of the attached refrigeration display cases or walk-ins.

EXCEPTION 1 to Section 127 (b) 1: Single compressor systems that do not have continuously variable capacity capability.

EXCEPTION 2 to Section 127 (b) 1: Suction groups that have a design saturated suction temperature of 30°F or higher, or suction groups that comprise the high stage of a two-stage or cascade system or that primarily serve chillers for secondary cooling fluids.

2. Liquid subcooling shall be provided for all low temperature parallel compressor systems with a design saturated suction temperature of -10°F or lower, with the subcooled liquid temperature maintained continuously at 50°F or less at the exit of the subcooler, using compressor economizer port(s) or a separate parallel medium or high temperature suction group operating at a saturated suction temperature of 18°F or higher.

EXCEPTION 1 to Section 127 (b) 2: Single compressor systems.

EXCEPTION 2 to Section 127 (b) 2: Low temperature cascade systems that condense into another refrigeration system rather than condensing to ambient temperature.

EXCEPTION 3 to Section 127 (b) 2: Existing compressors that are reused for an expansion or remodel,

(c) Display Cases.

2. Lighting in refrigeration display cases, and lights on glass doors installed on walk-in coolers and freezers shall be controlled by either A or B:

    a. Automatic time switch controls to turn off lights during non-business hours. Use of timed overrides to turn the lights for stocking shall not exceed one hour for any case line-up or walk-in and if manually imitated shall time-out automatically.

    b. Motion sensor controls on each case that reduce display case lighting power by at least 50% within 30 minutes after the area near the case is vacated.

EXCEPTION 1 to Section 127 (c) 1: Stores which are normally open for business 140 hours or more per week.

3. Upright low temperature display cases that are designed for a supply air temperature of 5°F or lower shall utilize reach-in glass doors.

(d) Refrigeration Heat Recovery

1. HVAC systems shall utilize heat recovery from refrigeration system(s) for space heating, using no less than 25% of the sum of the design Total Heat of Rejection of all refrigeration systems that have individual Total Heat of Rejection values of 150,000 BTU/Hr or greater at design conditions.

EXCEPTION 1 to Section 127 (d) 1: Stores located in Climate Zone CTZ15.

EXCEPTION 2 to Section 127 (d) 1: HVAC systems that are reused for an expansion or remodel.

2. The increase in HFC refrigerant charge associated with refrigeration heat recovery equipment and piping shall be no greater than 0.35 lbs per 1,000 BTU/Hr of heat recovery heating capacity.

TITLE 24 PART 11 - CALIFORNIA GREEN BUILDING STANDARDS CODE REQUIREMENTS FOR SUPERMARKET REFRIGERATION

(a) CO_2 Indirect or Cascade Cooling Systems

1. Cooling for all refrigerated display cases and walk-in coolers and freezers shall be provided using carbon dioxide (CO_2), connected to compressors as a direct expansion refrigerant, or as a phase-change indirect cooling fluid.

EXCEPTION 1 to Section (a) 1: Stores with less than 20,000 square feet of sales area.

EXCEPTION 2 to Section (a) 1: Existing compressor systems that are reused for an expansion or remodel

EXCEPTION 3 to Section (a) 1: For the medium temperature display cases and coolers use of indirect glycol cooling including the following:

a. Stores with a total medium temperature fixtures and walk-in cooling load of 360,000 BTU/Hr or greater shall have at least one glycol chiller designed with a glycol supply temperature no lower than 25°F.

b. Glycol supply pump(s) equipped with variable speed drives controlled based on glycol loop pressure differential and with two-way (no bypass) type control valves at cooling coils and display cases.

c. Variable speed control on walk-in cooling coil fans, utilizing speed control as primary temperature control before cycling glycol supply valves, with minimum fan speed no greater than 70%.

EXCEPTION 4 to Section (a) 1: Direct expansion systems using a Low-GWP Refrigerant.

EXCEPTION 5 to Section (a) 1: Self-contained refrigerated display cases.

6. Appendix A: Rejected Measures

This appendix summarizes the measures that were considered for inclusion in the 2013 standards, but were later dropped from consideration after initial research. These include:

- Evaporator Coil Specific Efficiency
- Display Case LED Lights
- Night Covers on Open Display Cases
- Prohibit Hot Gas Defrost
- Liquid-Suction Heat Exchangers
- Walk-in Variable Speed Fan Control

Evaporator Coil Specific Efficiency

Evaporator coil specific efficiency (Btu/hr/Watt at a standard condition) was considered for inclusion in the Title 24 standard. Research was to be conducted for as many as five or more families of evaporator coils, including consideration of coil sizes, refrigerant feed type (direct expansion vs. flooded/recirculated), considerations for long-throw and penthouse (ducted) configurations, freezer and cooler coils, fans required for air mixing (throw length), with potential to research other variants. Existing work has already been completed for smaller evaporators as part of the 2008 Title 20 appliance efficiency standards, where an initial study of a large portion of the available evaporator coils showed a very wide range in evaporator fan power per unit of capacity (specific efficiency).

Initial research into the feasibility of this measure revealed several challenges:

- Evaporator coils are not rated to any performance standard. Capacity is not published per AHRI standards. Power is often not published at all, and when available is almost always the nominal motor power, not the applied power. Furthermore, for smaller units, the nominal motor power is typically regarded as a generalization, with actual shaft power often differing from nominal power by as much as 100%. Until evaporators are rated and published according to a standard, the actual performance will remain largely unknown, and it is very likely that evaporators will increase in size if they are rated, tested and certified to a standard.
- Requiring ratings to AHRI conditions (and certified ratings) would very likely cause extensive changes to evaporator coil ratings since the catalog values now are “commercialized” by most accounts, at least on smaller models.

While mandating an efficiency requirement to prohibit the worst-performing models would yield significant savings, it is recommended that this measure be deferred until certification and testing is widely implemented for this equipment.

Display Case LED Lights

The feasibility and cost-effectiveness of implementing LED lights in reach-in glass door cases and open display cases was evaluated. The savings and cost-effectiveness of this measure were very attractive. However, several issues were discovered during preliminary analysis of this measure:

- For medium-temperature open display cases, stakeholders responded that extensive study was conducted to gauge the economics of LED lights, which revealed that products sold in less volume

under LED lighting than under conventional lighting. LED lights do not illuminate the product as effectively as conventional fluorescent lighting.

- For the low-temperature reach-in display cases with doors, door lighting requirements are pre-empted by federal display case standards.

Night Covers on Open Display Cases

The feasibility and cost-effectiveness of requiring night covers on all open display cases was evaluated. Air curtains were assumed to reduce infiltration into open upright medium-temperature display cases during non-business and non-stocking hours.

Analysis showed that the measure was not cost-effective, based on poor TDV economics, particularly when labor to put up and take down the night covers on a daily basis is considered.

Prohibit Gas Defrost

The analysis evaluated the cost-effectiveness of prohibiting hot gas defrost for walk-in evaporator coils and refrigerated display cases. Acceptable methods of defrost would be electric resistance, or off-cycle.

Although gas defrost uses less energy than electric defrost, gas defrost requires valving that increases head pressure and consequently requires a higher refrigerant charge. Therefore, by prohibiting gas defrost, this measure is assumed to reduce charge size by up to 10%. Gas defrost is also expected to increase the potential for leaks due to the need for additional piping and valves. Thus, prohibiting hot gas defrost is also assumed to reduce refrigerant leak rates by 5%.

Figure 40 summarizes the preliminary results from the direct and indirect emissions analysis of this measure based on only one climate zone (Sacramento [CTZ12]).

	Annual Refrigerant Savings Range		**Annual Refrigerant Savings Range**		**Annual Energy Savings**	**Net Annual Savings Range**	
	Pounds		**$MTCO_2eq$**		**$MTCO_2eq$**	**$MTCO_2eq$**	
	Low	**High**	**Low**	**High**		**Low**	**High**
SXX Average	25	42	45	74	-3	42	71
MXX Average	34	50	60	89	-15	45	75
LXX Average	140	212	253	384	-17	236	367
XAX Average	21	35	38	63	-11	27	52
XEX Average	20	33	36	60	-12	25	48
XFX Average	134	201	242	363	-11	230	352
All Average	66	101	119	182	-11	108	171

Figure 40: Sacramento GHG savings results for no hot gas defrost

Figure 41 summarizes the net impacts of this measure on lifetime costs, including the monetized benefit of avoided GHG emissions in the same climate zone.

	Measure/ Maintenance Cost ($)	Refrigerant Cost Savings Range ($)		TDV Energy Cost Savings ($)	Net Lifetime Savings Range ($)		Benefit/Cost Ratio Range ($)	
		Low	High		Low	High	Low	High
SXX Average	$0	$6,717	$10,511	-$18,138	-$11,421	-$7,627	0.37	0.58
MXX Average	$0	$33,482	$52,882	-$102,124	-$68,642	-$49,241	0.33	0.52
LXX Average	$0	$41,307	$64,626	-$116,046	-$74,739	-$51,420	0.36	0.56
XAX Average	$0	$27,234	$43,996	-$78,747	-$51,514	-$34,751	0.35	0.56
XEX Average	$0	$48,352	$72,528	-$78,979	-$30,627	-$6,451	0.61	0.92
XFX Average	$0	$16,512	$26,422	-$78,687	-$62,174	-$52,264	0.21	0.34
All Average	$0	$27,169	$42,673	-$78,769	-$51,600	-$36,096	0.34	0.54

Figure 41: Sacramento cost savings analysis results for no hot gas defrost

As shown, when GHG emission reductions associated with reduced R-404A/507 refrigerant leakage are accounted for, significant net GHG benefits can be realized. However, this measure is not cost-effective based on TDV energy costs, and the refrigerant and carbon cost savings associated with reduce refrigerant emissions are not sufficient to render the measure cost-effective. As a result, this measure was removed from consideration.

Walk-in Variable Speed Fan Control

The CASE team has received strong industry concern about this requirement. The measure has very attractive economics for owners, but because of these concerns, which will initially require special attention and engineering, we recommend this measure not be considered for this round of the standards update. We will continue to dialogue with industry to determine a long term solution to improve energy efficiency while maintaining product quality. Presented below is the walk-in variable speed fan control measure analysis, in its entirety.

The feasibility and cost-effectiveness of variable-speed control of evaporator fans in walk-in was evaluated. The measure analysis assumes modulation of the speed of all walk-in air unit fans in unison (at the same speed) as the primary means of space temperature control.

For the Base Case, no fan speed control is assumed; walk-in air unit fans are assumed to run at full-speed at all hours. To simulate variable-speed fan control, a part-load performance curve representing an approximate “third-power” relationship between % fan speed and % fan power was utilized.

The minimum fan speed was assumed to be 70%, and to account for realistic variations in control response and setpoints than are not readily captured in an hourly simulation, the fans were scheduled to run at 90% speed for four full, non-consecutive hours per day, regardless of the actual cooling demand. In normal operation the fan speed would be a function of cooling demand only; it would not be expected to or required to have these mandatory minimum speeds. However, in order to account for the many different walk-in/coil configurations and periodic variations in stocking levels (i.e. occasional severe overstocking) mentioned by shareholders, a minimum duty cycle at full speed is anticipated to provide greater air circulation, if necessary.

6.1.1 Analysis results by climate zone

The walk-in variable speed fan control measure was evaluated for all system types and in all climate zones. Figure 42 below summarizes the simulation results for the walk-in variable speed control measure:

	Energy Savings (kWh)	Energy Savings/ SF (kWh)	TDV Cost Savings ($)	TDV Cost Savings /SF ($)	Measure Cost ($)	Benefit/ Cost Ratio
SXX Average	3,971	0.25	$9,499	$0.60	$5,377	1.77
MXX Average	26,677	0.45	$63,330	$1.06	$15,529	4.08
LXX Average	143,019	0.88	$343,523	$2.12	$23,667	14.51
XAX Average	57,077	0.52	$137,278	$1.24	$14,858	9.24
XEX Average	56,224	0.51	$134,362	$1.22	$14,858	9.04
XFX Average	59,533	0.54	$142,502	$1.30	$14,858	9.59
All Average						
CTZ01 - Arcata	56,615	0.52	$134,578	$1.229	$14,858	9.06
CTZ03 – Oakland	57,182	0.52	$136,760	$1.245	$14,858	9.20
CTZ05 – Santa Maria	57,072	0.52	$136,590	$1.245	$14,858	9.19
CTZ07 – San Diego	58,138	0.53	$140,719	$1.283	$14,858	9.47
CTZ08 - Fullerton	58,095	0.53	$138,707	$1.260	$14,858	9.34
CTZ10 – Riverside	58,172	0.53	$139,038	$1.262	$14,858	9.36
CTZ12 – Sacramento	57,886	0.53	$139,601	$1.266	$14,858	9.40
CTZ13 – Fresno	58,275	0.53	$140,384	$1.271	$14,858	9.45
CTZ14 – Palmdale	57,930	0.53	$138,453	$1.253	$14,858	9.32
CTZ15 – Palm Springs	59,525	0.54	$143,012	$1.292	$14,858	9.63
Maximum	153,159	0.94	$369,171	$2.277	$23,667	15.60
Minimum	3,763	0.24	$8,917	$0.563	$5,377	1.66

Figure 42: Statewide savings results for walk-in variable-speed fan control measure

The analysis shows that walk-in variable speed control is cost-effective for all system configurations and in all climate zones.

The proposed code requirement consists of mandatory control of fan-powered direct-expansion (DX) evaporators or secondary cooling coils in walk-in freezers and coolers, utilizing variable speed fan control as the primary means of space temperature control.

Control integration requirements

- For DX evaporators, speed control must be the primary means of temperature control, before other temperature control means, including cycling of liquid line solenoids, throttling of suction regulators (electronic or manual) or floating suction pressure on the associated suction group, if the walk-in is used for floating suction pressure control. Fan speed must reduce to minimum speed before other means of temperature control are applied.
- For secondary cooling coils (e.g. glycol or CO_2) speed control must be the primary means of temperature control before other flow controls are applied.

6.1.2 Industry concerns regarding sufficient airflow and product quality

Numerous concerns were raised by stakeholders. The two primary concerns are 1) the concern for air circulation since boxes have varied configurations and can be overstocked periodically, to the point that air doesn't circulate properly *even at full speed operation* and 2) the lack of industry experience with this measure which limits the ability to comment one way or the other. .

Improved air circulation

Two options have been discussed in stakeholder meetings to address the need for improved air circulation at certain times. One method would force full speed operation on a duty-cycle basis, such as 25% of every hour, regardless of temperature. Another method would allow forced full speed run time for a longer period, such as 8 hours to address a heavy product stock level, where the airflow may be blocked such that full speed would not be achieved simply based on space temperature.

Lack of industry experience

Additional discussion and stakeholder input is needed to fully develop this proposed code language. While there are very few examples of speed controlled evaporator fans in supermarkets, there are many examples in other industrial and commercial applications, and vendors of evaporators for supermarkets have been very active and innovative in recent months. One coil manufacturer currently has the motor technology to accept a fan speed control signal, while another can implement the motor technology at a cost premium. One air unit manufacturer has stated that they do not have fan motors that are variable-speed capable, and they are not currently pursuing the technology. One controls manufacturer stated that air unit variable speed can be implemented today, but it is considered a special request. Were demand for the technology to increase, the logic algorithm could be integrated into the manufacturer's standard offering which would eliminate the "special request" cost premium.

Liquid-Suction Heat Exchangers

The CASE team has received strong industry concern about leakage problems with liquid-suction heat exchangers. Therefore, despite the potential energy savings and high benefit/cost ratios, we will not propose a mandatory requirement for liquid suction heat exchangers on all display cases and walk-ins. We will continue to dialogue with industry to determine a long term solution to both the energy and the leakage issues. Presented below is the full analysis of liquid-suction heat exchangers, in its entirety.

This measure evaluates the feasibility and cost-effectiveness of high-performance liquid-suction heat exchangers (LSHXs) on display cases and walk-ins. A LSHX subcools the liquid refrigerant entering a refrigeration circuit load (either a walk-in evaporator coil or display case lineup) using the relatively cold suction gas exiting the case or walk-in, increasing the capacity of the liquid refrigerant to

perform useful refrigeration. Since most systems have a substantial amount of non-productive parasitic heat gain (i.e. superheat) between the load and the compressor, the LSHX essentially recovers capacity that would otherwise be lost. The subcooling provided by the LSHXs also helps maintain system stability by minimizing flash gas at the expansion valve.

A number of Baseline adjustments were made to achieve an accurate performance evaluation for this measure. The basis of comparison for liquid-suction heat exchangers was a system with floating head pressure to a 70°F minimum SCT with variable-speed condenser fan control with variable-setpoint (ambient-following) control logic, as well as mechanical subcooling of the low-temperature systems as described previously.

Liquid-suction heat exchangers were simulated as having both a subcooling effect on liquid refrigerant temperatures, as well as a superheating effect on the suction vapor returning to the compressor—with the associated impacts on mass-flow pumping efficiency. Figure 43 and Figure 44 illustrate the suction vapor superheat assumptions for both the Base Case and the LSHX for MT and LT systems, respectively, while Figure 45 describes the assumed LSHX sizing for this analysis. Sizing is based on R-404A refrigerant.

	Base Case	LSHX Case
Saturated Evaporating Temperature (SET)	17°F	Same as Base Case
Productive Superheat in Evaporator Coil and Case/Walk-In	8°F	Same as Base Case
Leaving Evaporator Coil Gas Temperature	25°F	Same as Base Case
Return Gas Temperature at Compressor Inlet	40°F (central systems), 35°F (distributed systems)	48°F (15°F superheat in LSHX, 8°F non-productive superheat after LSHX)

Figure 43: Suction line heat gain assumptions (MT systems)

	Base Case	LSHX Case
Saturated Evaporating Temperature (SET)	-22°F	Same as Base Case
Productive Superheat in Evaporator Coil and Case/Walk-In	10°F	Same as Base Case
Leaving Evaporator Coil Gas Temperature	-12°F	Same as Base Case
Return Gas Temperature at Compressor Inlet	23°F (central systems), 18°F (distributed systems)	35°F (35°F superheat in LSHX, 12°F non-productive superheat after LSHX)

Figure 44: Suction line heat gain assumptions (LT systems)

Suction Group	Liquid Subcooling	Suction Gas Superheat
Low-Temperature (LT)	17°F	35°F
Medium-Temperature (MT)	7°F	15°F

Figure 45: LSHX sizing assumptions for cost and performance

6.1.3 Analysis results by climate zone

The liquid-suction heat exchanger (LSHX) measure was evaluated separately for medium temperature walk-ins, low temperature walk-ins, medium temperature display cases, and low-temperature display

cases for all system types and in all climate zones. Figure 46 through Figure 49 below summarize the simulation results for the LSHX measures:

	Energy Savings (kWh)	Energy Savings/ SF (kWh)	TDV Cost Savings ($)	TDV Cost Savings /SF ($)	Measure Cost ($)	Benefit/ Cost Ratio
SXX Average	251	0.02	$ 439	$ 0.03	$ 282	1.56
MXX Average	1,686	0.03	$ 3,618	$ 0.06	$ 1,801	2.01
LXX Average	8,352	0.05	$ 18,254	$ 0.11	$ 3,401	5.37
XAX Average	3,100	0.03	$ 7,073	$ 0.06	$ 1,828	3.87
XEX Average	3,137	0.03	$ 6,550	$ 0.06	$ 1,828	3.58
XFX Average	3,905	0.04	$ 8,245	$ 0.08	$ 1,828	4.51
All Average						
CTZ01 - Arcata	2,480	0.02	$ 5,067	$ 0.05	$ 1,828	2.77
CTZ03 – Oakland	2,888	0.03	$ 6,102	$ 0.05	$ 1,828	3.34
CTZ05 – Santa Maria	2,823	0.03	$ 5,887	$ 0.05	$ 1,828	3.22
CTZ07 – San Diego	3,445	0.03	$ 7,262	$ 0.06	$ 1,828	3.97
CTZ08 - Fullerton	3,602	0.03	$ 7,660	$ 0.07	$ 1,828	4.19
CTZ10 – Riverside	3,651	0.03	$ 8,044	$ 0.07	$ 1,828	4.40
CTZ12 – Sacramento	3,366	0.03	$ 7,460	$ 0.07	$ 1,828	4.08
CTZ13 – Fresno	3,670	0.03	$ 8,157	$ 0.07	$ 1,828	4.46
CTZ14 – Palmdale	3,422	0.03	$ 7,589	$ 0.07	$ 1,828	4.15
CTZ15 – Palm Springs	4,948	0.05	$ 11,144	$ 0.10	$ 1,828	6.10
Maximum	13,990	0.09	$ 32,137	$ 0.20	$ 3,401	9.45
Minimum	-193	-0.01	$ (756)	$ (0.05)	$ 282	-2.68

Figure 46: Statewide savings analysis for liquid-suction heat exchangers (MT Walk-Ins)

	Energy Savings (kWh)	Energy Savings/ SF (kWh)	TDV Cost Savings ($)	TDV Cost Savings /SF ($)	Measure Cost ($)	Benefit/ Cost Ratio
SXX Average	607	0.04	$1,252	$0.08	$452	2.77
MXX Average	4,491	0.08	$8,943	$0.15	$718	12.46
LXX Average	46,961	0.29	$93,788	$0.58	$5,263	17.82
XAX Average	16,119	0.12	$33,067	$0.25	$2,144	15.42
XEX Average	16,878	0.13	$33,190	$0.26	$2,144	15.48
XFX Average	18,825	0.15	$36,990	$0.29	$2,144	17.25

All Average						
CTZ01 - Arcata	15,192	0.12	$29,343	$0.227	$2,144	13.69
CTZ03 – Oakland	16,157	0.13	$31,666	$0.246	$2,144	14.77
CTZ05 – Santa Maria	15,957	0.12	$31,218	$0.242	$2,144	14.56
CTZ07 – San Diego	17,518	0.14	$34,723	$0.272	$2,144	16.19
CTZ08 - Fullerton	17,726	0.14	$35,071	$0.274	$2,144	16.36
CTZ10 – Riverside	17,826	0.14	$35,934	$0.280	$2,144	16.76
CTZ12 – Sacramento	17,148	0.13	$34,877	$0.272	$2,144	16.27
CTZ13 – Fresno	17,970	0.14	$36,521	$0.284	$2,144	17.03
CTZ14 – Palmdale	17,333	0.13	$35,070	$0.272	$2,144	16.36
CTZ15 – Palm Springs	20,703	0.16	$42,187	$0.325	$2,144	19.67

Maximum	64,175	0.40	$138,790	$0.856	$5,263	26.37
Minimum	446	0.03	$863	$0.054	$452	1.91

Figure 47: Statewide savings analysis for liquid-suction heat exchangers (LT Walk-Ins)

	Energy Savings (kWh)	Energy Savings/ SF (kWh)	TDV Cost Savings ($)	TDV Cost Savings /SF ($)	Measure Cost ($)	Benefit/ Cost Ratio
SXX Average	3,536	0.22	$7,507	$0.47	$1,577	4.76
MXX Average	15,663	0.26	$33,934	$0.57	$6,710	5.06
LXX Average	2,329	0.01	$5,052	$0.03	$840	6.02
XAX Average	5,962	0.14	$13,710	$0.32	$3,042	4.51
XEX Average	6,761	0.16	$13,843	$0.32	$3,042	4.55
XFX Average	8,597	0.20	$18,113	$0.42	$3,042	5.95

All Average						
CTZ01 - Arcata	5,680	0.13	$11,327	$0.267	$3,042	3.72
CTZ03 – Oakland	6,339	0.15	$13,073	$0.307	$3,042	4.30
CTZ05 – Santa Maria	6,155	0.14	$12,527	$0.294	$3,042	4.12
CTZ07 – San Diego	7,766	0.18	$16,232	$0.378	$3,042	5.34
CTZ08 - Fullerton	7,607	0.17	$16,138	$0.370	$3,042	5.30
CTZ10 – Riverside	7,562	0.18	$16,720	$0.387	$3,042	5.50
CTZ12 – Sacramento	7,022	0.16	$15,660	$0.362	$3,042	5.15
CTZ13 – Fresno	7,559	0.17	$16,911	$0.387	$3,042	5.56

CTZ14 – Palmdale	6,600	0.15	$14,719	$0.338	$3,042	4.84
CTZ15 – Palm Springs	9,466	0.22	$21,671	$0.492	$3,042	7.12

Maximum	24,007	0.40	$52,944	$0.889	$6,710	11.88
Minimum	1,307	0.01	$2,385	$0.015	$840	2.26

Figure 48: Statewide savings analysis for liquid-suction heat exchangers (MT display cases)

	Energy Savings (kWh)	Energy Savings/ SF (kWh)	TDV Cost Savings ($)	TDV Cost Savings /SF ($)	Measure Cost ($)	Benefit/ Cost Ratio
SXX Average	7,344	0.46	$14,339	$0.90	$1,095	13.10
MXX Average	23,222	0.39	$46,457	$0.78	$2,592	17.92
LXX Average	10,781	0.07	$21,543	$0.13	$2,953	7.30
XAX Average	12,269	0.28	$25,085	$0.56	$2,213	11.33
XEX Average	13,261	0.29	$25,839	$0.57	$2,213	11.67
XFX Average	15,557	0.34	$30,611	$0.67	$2,213	13.83

All Average						
CTZ01 - Arcata	12,345	0.28	$23,747	$0.532	$2,213	10.73
CTZ03 – Oakland	13,066	0.29	$25,528	$0.569	$2,213	11.53
CTZ05 – Santa Maria	12,890	0.29	$25,050	$0.560	$2,213	11.32
CTZ07 – San Diego	14,394	0.32	$28,375	$0.624	$2,213	12.82
CTZ08 - Fullerton	14,047	0.31	$27,867	$0.610	$2,213	12.59
CTZ10 – Riverside	14,045	0.31	$28,418	$0.625	$2,213	12.84
CTZ12 – Sacramento	13,482	0.30	$27,503	$0.606	$2,213	12.43
CTZ13 – Fresno	14,143	0.31	$28,741	$0.631	$2,213	12.98
CTZ14 – Palmdale	13,396	0.30	$27,140	$0.600	$2,213	12.26
CTZ15 – Palm Springs	16,018	0.35	$32,093	$0.701	$2,213	14.50
Maximum	30,598	0.57	$60,349	$1.179	$2,953	23.28
Minimum	5,896	0.05	$11,018	$0.096	$1,095	5.26

Figure 49: Statewide savings analysis for liquid-suction heat exchangers (LT display cases)

The results tables show that the benefit/cost ratio for all system configurations and in all climate zones for all LSHX types is greater than 1—with the exception of certain MT walk-in LSHXs in small

stores. Medium-temperature walk-in LSHX simulations with benefit/cost ratios less than 1 are shown in Figure 50.

	Configuration	Energy Savings (kWh)	Energy Savings/ SF (kWh)	TDV Cost Savings ($)	TDV Cost Savings /SF ($)	Measure Cost ($)	Benefit/ Cost Ratio
CTZ01 - Arcata	SAC	158	0.01	$214	$0.013	$282	0.76
	SAD	129	0.01	$267	$0.017	$282	0.95
CTZ03 – Oakland	SAC	195	0.00	-$409	-$0.026	$282	-1.45
CTZ05 – Santa Maria	SAC	16	0.00	-$436	-$0.028	$282	-1.55
CTZ07 – San Diego	SAC	-193	-0.01	-$756	-$0.048	$282	-2.68
CTZ08 - Fullerton	SAC	245	0.02	-$214	-$0.013	$282	-0.76
CTZ10 – Riverside	SAC	278	0.02	-$18	-$0.001	$282	-0.06
CTZ12 – Sacramento	SAC	245	0.02	-$214	-$0.013	$282	-0.76
CTZ13 – Fresno	SAC	18	0.00	-$667	-$0.042	$282	-2.36
CTZ14 – Palmdale	SAC	95	0.01	-$445	-$0.028	$282	-1.58
CTZ15 – Palm Springs	SAC	65	0.00	-$36	-$0.002	$282	-0.13

Figure 50: MT walk-in LSHX simulations with BC less than 1.0

Figure 50 shows the small supermarket prototype with air-cooled central systems not cost-effective in any simulated climate zone. The small supermarket medium-temperature walk-in boxes are all small, compared to the large supermarket and big-box store which both have a variety of small and large MT walk-ins. LSHX purchase price is non-linear with relation to capacity, and there is a size threshold for walk-in boxes where the savings benefit does not justify the cost.

To further investigate this point, Figure 51 shows a breakdown of LSHX results for individual MT walk-ins. The results are for the large supermarket prototype, since the large supermarket has the most variety of MT walk-in sizes.

Walk-In	Area (SF)	Savings (kWh/SF)	TDV Savings ($TDV)	LSHX Cost ($)	B/C Ratio
CTZ01 - Arcata					
Deli Cooler	64	28.6	$66	$149	0.44
Bakery Retarder	70	31.3	$72	$151	0.48
Meat Holding	91	40.7	$93	$155	0.60
Wine Cooler	121	54.1	$124	$160	0.78
Produce Cooler	400	179.0	$411	$199	2.07
Meat Cooler	540	241.6	$554	$224	2.47
Dairy Cooler	656	293.5	$673	$241	2.79
All WI	1942	869.0	$1,994	$1,801	1.11
CTZ03 - Oakland					
Deli Cooler	64	40.9	$101	$149	0.67

Bakery Retarder	70	44.7	$110	$151	0.73
Meat Holding	91	58.2	$143	$155	0.93
Wine Cooler	121	77.3	$190	$160	1.19
Produce Cooler	400	255.6	$629	$199	3.17
Meat Cooler	540	345.1	$849	$224	3.78
Dairy Cooler	656	419.2	$1,031	$241	4.28
All WI	1942	1241.0	$3,053	$1,801	1.69
CTZ05 - Santa Maria					
Deli Cooler	64	39.0	$94	$149	0.63
Bakery Retarder	70	42.7	$103	$151	0.69
Meat Holding	91	55.5	$134	$155	0.87
Wine Cooler	121	73.8	$179	$160	1.12
Produce Cooler	400	243.9	$590	$199	2.97
Meat Cooler	540	329.2	$797	$224	3.55
Dairy Cooler	656	400.0	$968	$241	4.02
All WI	1942	1184.0	$2,866	$1,801	1.59
CTZ07 - San Diego/Lindbergh					
Deli Cooler	64	63.7	$143	$149	0.96
Bakery Retarder	70	69.6	$156	$151	1.04
Meat Holding	91	90.5	$203	$155	1.31
Wine Cooler	121	120.4	$270	$160	1.69
Produce Cooler	400	397.9	$893	$199	4.50
Meat Cooler	540	537.2	$1,205	$224	5.37
Dairy Cooler	656	652.6	$1,464	$241	6.07
All WI	1942	1932.0	$4,334	$1,801	2.41
CTZ08 - Fullerton					
Deli Cooler	64	65.5	$142	$149	0.95
Bakery Retarder	70	71.6	$156	$151	1.03
Meat Holding	91	93.1	$202	$155	1.31
Wine Cooler	121	123.8	$269	$160	1.68
Produce Cooler	400	409.3	$889	$199	4.48
Meat Cooler	540	552.5	$1,200	$224	5.35
Dairy Cooler	656	671.2	$1,458	$241	6.05
All WI	1942	1987.0	$4,316	$1,801	2.40
CTZ10 - Riverside					
Deli Cooler	64	62.2	$132	$149	0.88

Bakery Retarder	70	68.1	$144	$151	0.96
Meat Holding	91	88.5	$187	$155	1.21
Wine Cooler	121	117.6	$249	$160	1.56
Produce Cooler	400	388.9	$823	$199	4.14
Meat Cooler	540	525.0	$1,111	$224	4.95
Dairy Cooler	656	637.8	$1,350	$241	5.60
All WI	1942	1888.0	$3,996	$1,801	2.22
CTZ12 - Sacramento					
Deli Cooler	64	52.5	$111	$149	0.74
Bakery Retarder	70	57.4	$121	$151	0.80
Meat Holding	91	74.6	$157	$155	1.02
Wine Cooler	121	99.3	$209	$160	1.31
Produce Cooler	400	328.1	$691	$199	3.48
Meat Cooler	540	443.0	$933	$224	4.16
Dairy Cooler	656	538.1	$1,133	$241	4.70
All WI	1942	1593.0	$3,355	$1,801	1.86
CTZ13 - Fresno					
Deli Cooler	64	61.3	$132	$149	0.88
Bakery Retarder	70	67.0	$144	$151	0.96
Meat Holding	91	87.1	$188	$155	1.21
Wine Cooler	121	115.8	$250	$160	1.56
Produce Cooler	400	382.9	$825	$199	4.15
Meat Cooler	540	516.9	$1,114	$224	4.96
Dairy Cooler	656	628.0	$1,353	$241	5.61
All WI	1942	1859.0	$4,005	$1,801	2.22
CTZ14 - Palmdale					
Deli Cooler	64	52.8	$110	$149	0.73
Bakery Retarder	70	57.7	$120	$151	0.80
Meat Holding	91	75.0	$156	$155	1.01
Wine Cooler	121	99.8	$207	$160	1.30
Produce Cooler	400	329.8	$686	$199	3.45
Meat Cooler	540	445.2	$926	$224	4.13
Dairy Cooler	656	540.8	$1,124	$241	4.66
All WI	1942	1601.0	$3,328	$1,801	1.85
CTZ15 - Palm Springs					
Deli Cooler	64	85.9	$194	$149	1.30

Bakery Retarder	70	94.0	$212	$151	1.41
Meat Holding	91	122.2	$276	$155	1.79
Wine Cooler	121	162.5	$367	$160	2.30
Produce Cooler	400	537.2	$1,214	$199	6.11
Meat Cooler	540	725.2	$1,638	$224	7.30
Dairy Cooler	656	881.0	$1,990	$241	8.26
All WI	1942	2608.0	$5,892	$1,801	3.27

Figure 51: MT LSHX results by walk-in with results and BCR on a per-SF basis

Figure 51 shows that, for walk-in boxes less than approximately 150 square feet, liquid suction heat exchangers are generally not cost-effective for MT walk-ins.

Stakeholders noted that with certain refrigerants (notably R-407x) compressors were sensitive to return gas temperatures (RGT) and that an increase in RGT as a result of adding LSHXs could potentially cause excessively high compressor temperatures and premature compressor failure for low-temperature suction groups. In order to address this concern, the measure costs in the results tables for LT walk-ins and LT display cases include an additional ¼" of suction line insulation thickness. The additional suction line insulation would reduce non-productive suction line heat gain between the load and the compressor, and offset the effect of the LSHX.

The simulation analysis for the LSHX measure was conducted with the Base Case refrigerant for each of the prototype supermarkets (R-404A and R-507). Figure 52 shows the calculated liquid subcooling and concurrent suction vapor superheat for equal-sized LSHXs for other refrigerants, which are also in use or being considered.

	Liquid Subcooling with Concurrent 15°F of Superheat (MT Systems)	Liquid Subcooling with Concurrent 35°F of Superheat (LT Systems)
R-404A/507	7°F	17°F
R-407A	9°F	19°F
R-410A	9°F	19°F

Figure 52: Liquid subcooling for R-404A, R-507, R-407A, and R-410A with equal-sized LSHXs

Figure 52 shows that the magnitude of subcooling for R-407A and R-410A is slightly greater for the same degree of superheat as R-404A and R-507. Conversely, suction vapor superheat would be slightly less for R-407A and R-410A than R-404A and R-507 for an equal amount of subcooling, indicating savings and system impacts will be similar with these refrigerants.

7. Appendix B: System Schematics

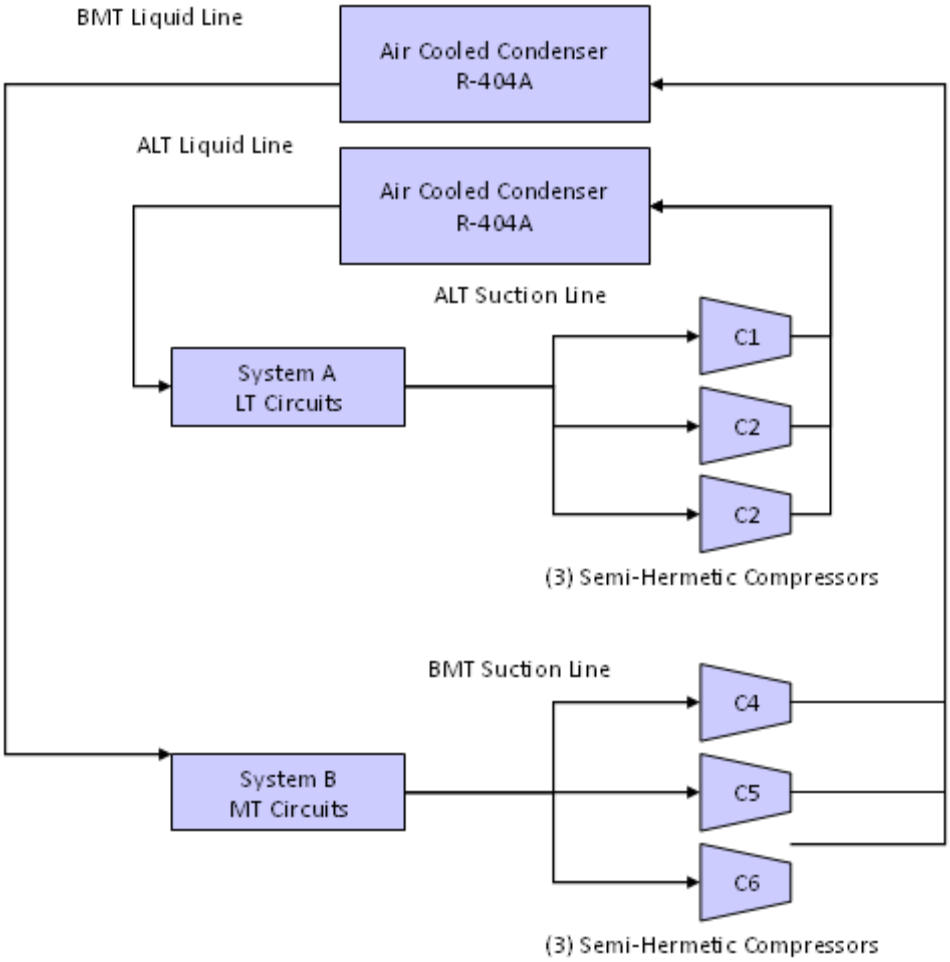

Figure 53: Small supermarket with central parallel rack compressor system and air-cooled condensers (SAC)

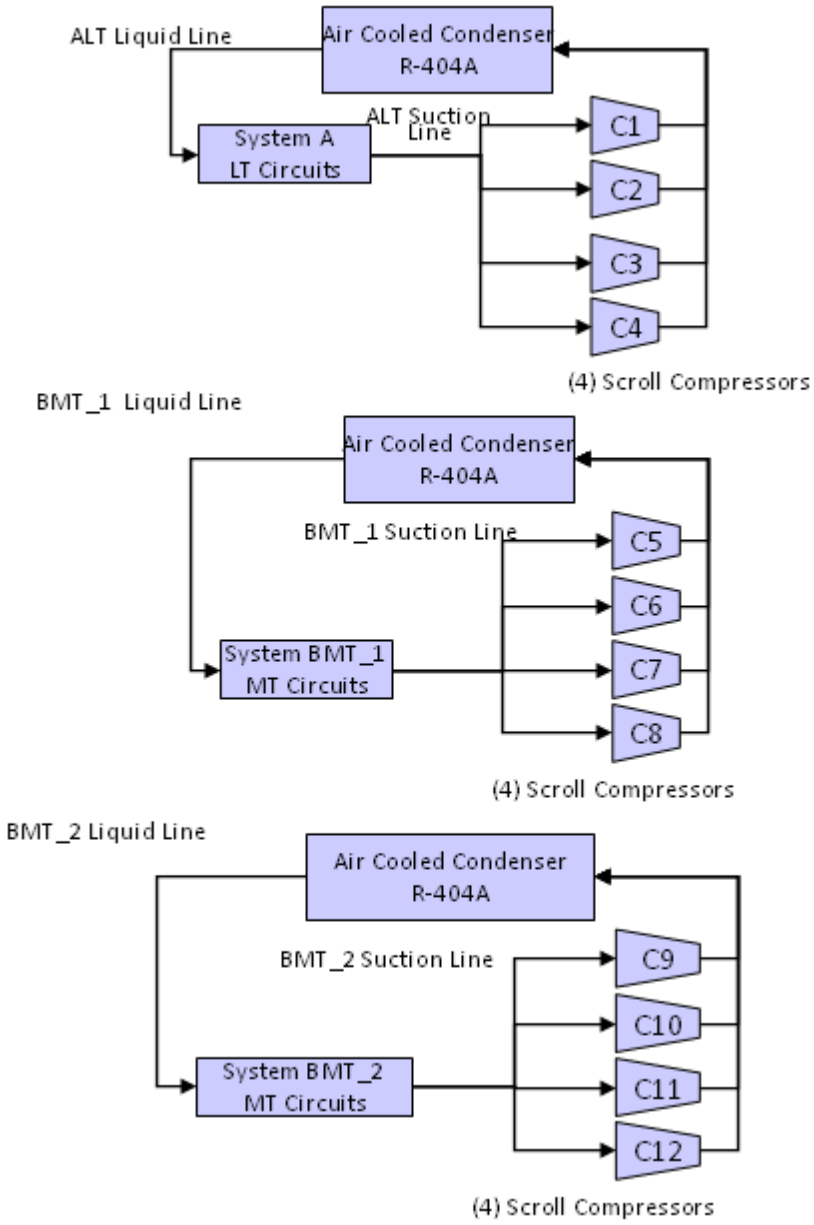

Figure 54: Small supermarket with distributed compressor systems and air-cooled condensers (SAD)

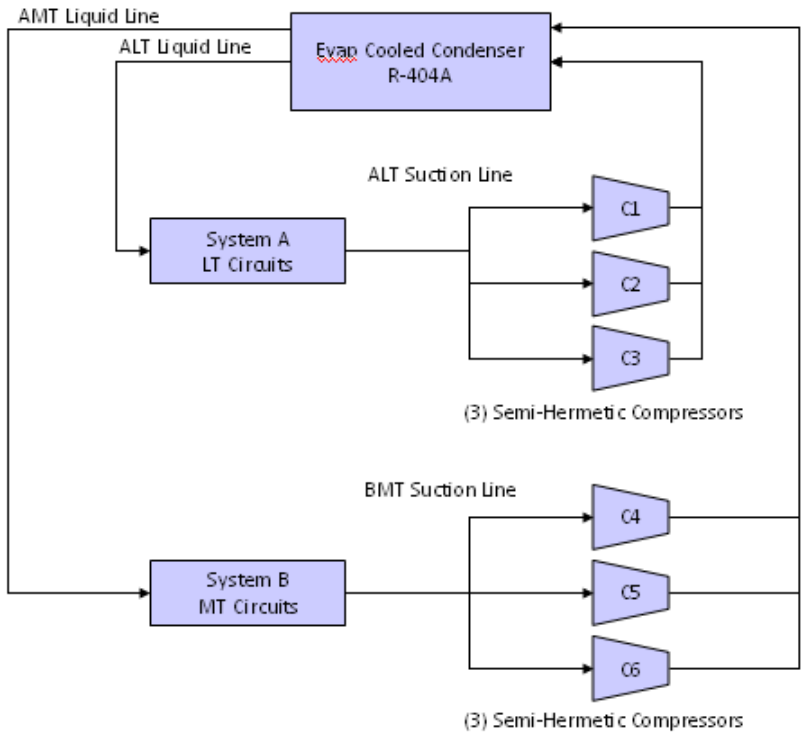

Figure 55: Small supermarket with central parallel rack compressor system and evaporative-cooled condensers (SEC)

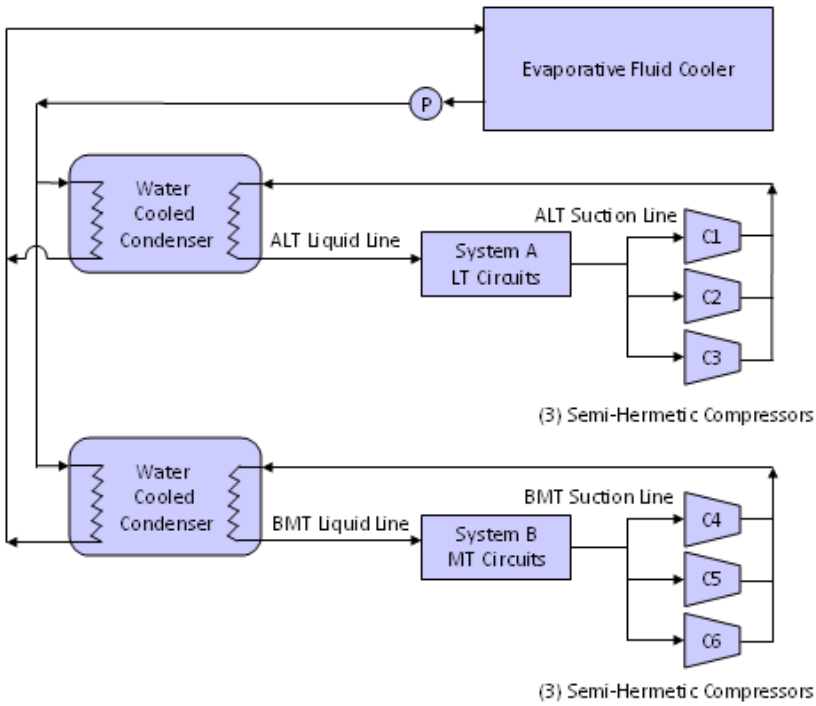

Figure 56: Small supermarket with central parallel rack compressor system and water-cooled condensers served by a central evaporative-cooled fluid cooler (SFC)

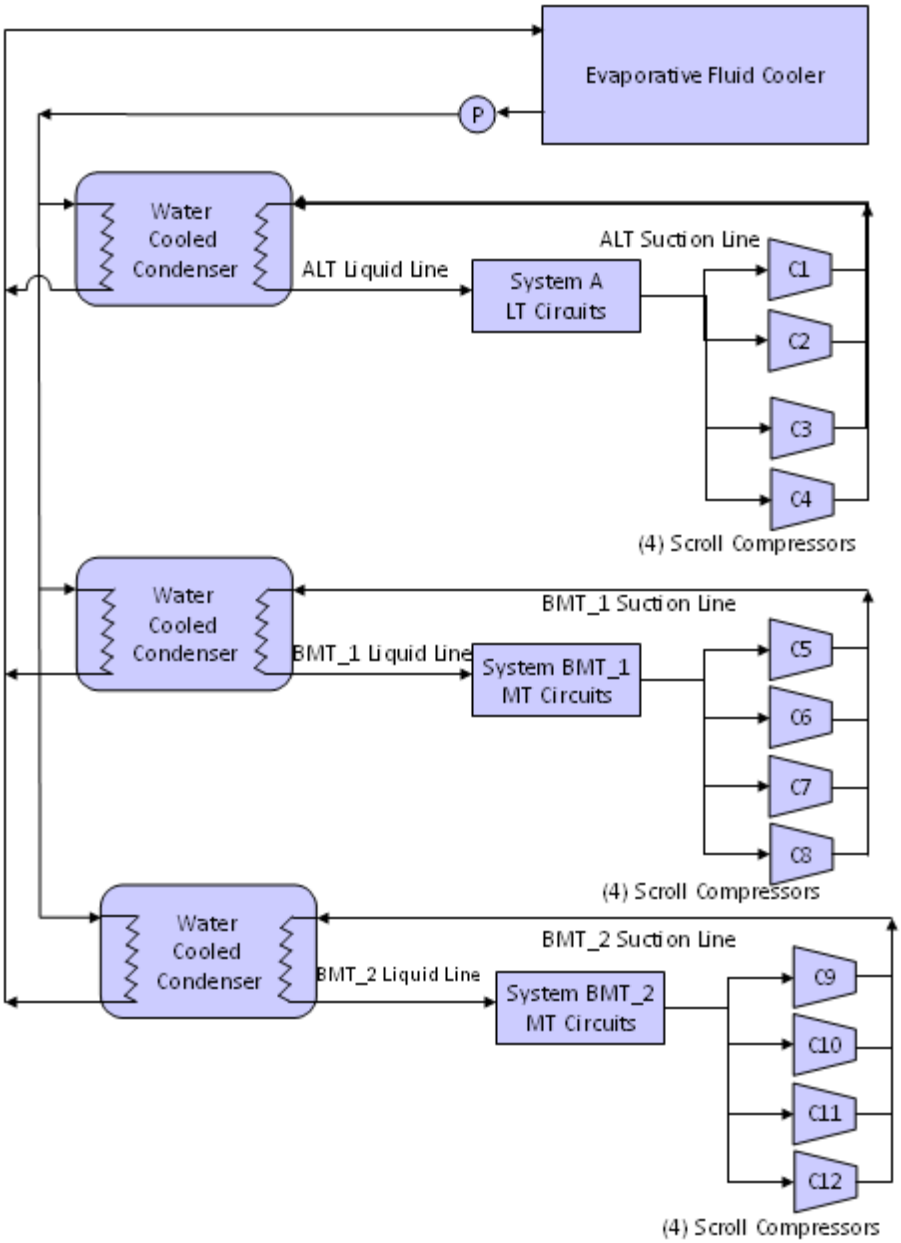

Figure 57: Small supermarket with distributed compressor systems and water-cooled condensers served by a central evaporative-cooled fluid cooler (SFD)

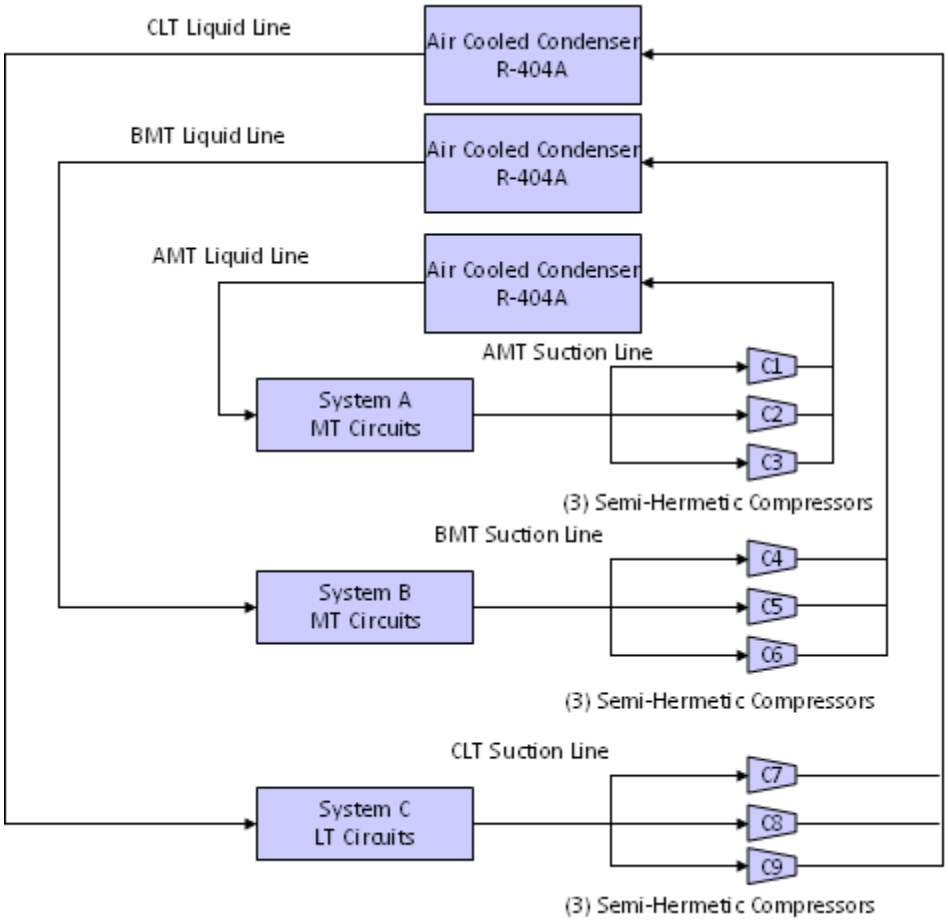

Figure 58: Large supermarket with central parallel rack compressor configuration and air-cooled condensers (MAC)

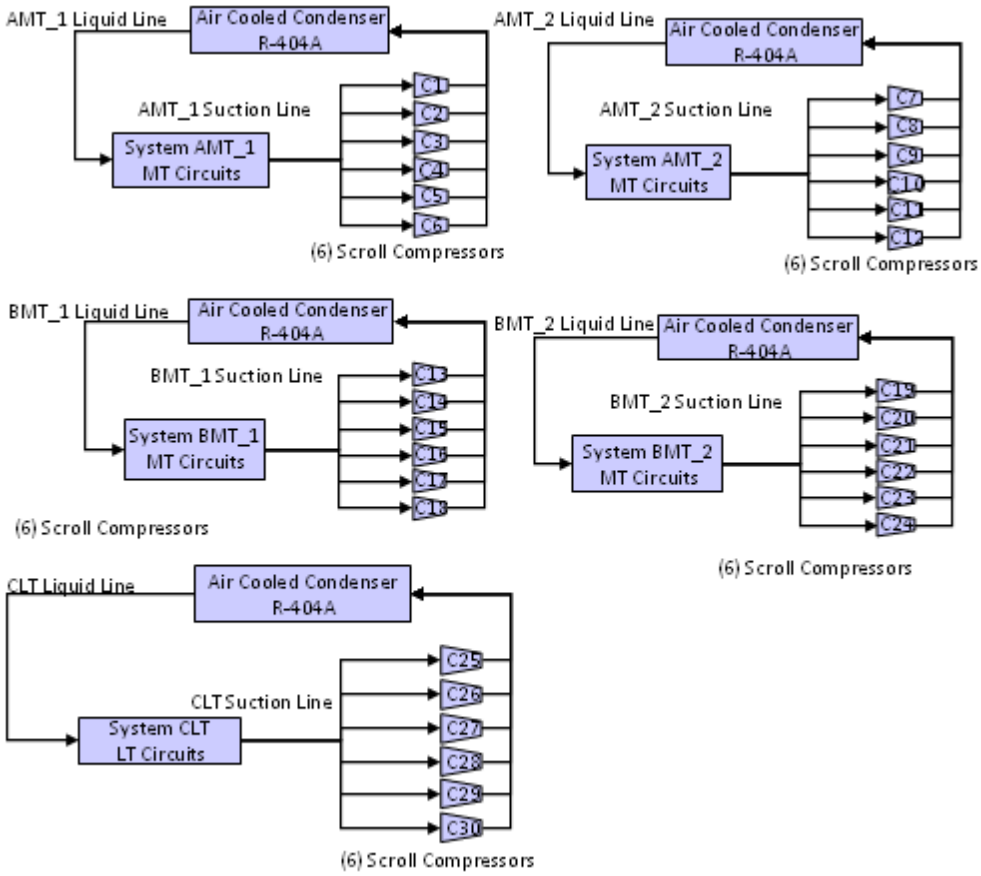

Figure 59: Large supermarket with distributed compressor systems and air-cooled condensers (MAD)

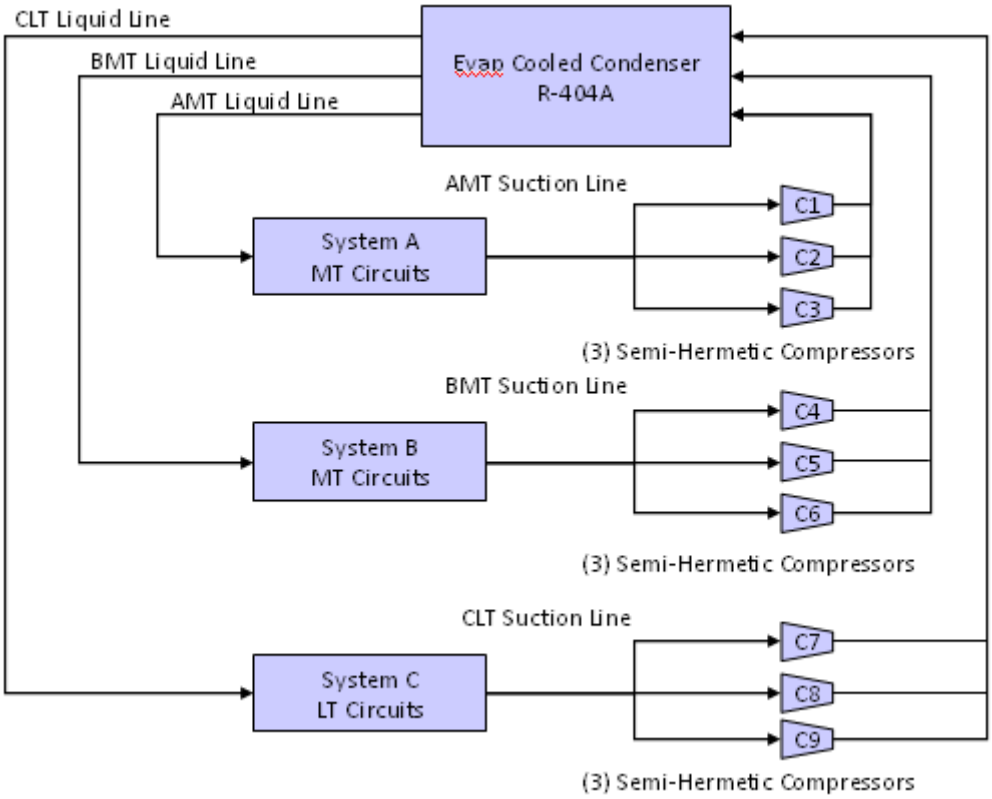

Figure 60: Large supermarket with central parallel rack compressor system and evaporative-cooled condensers (MEC)

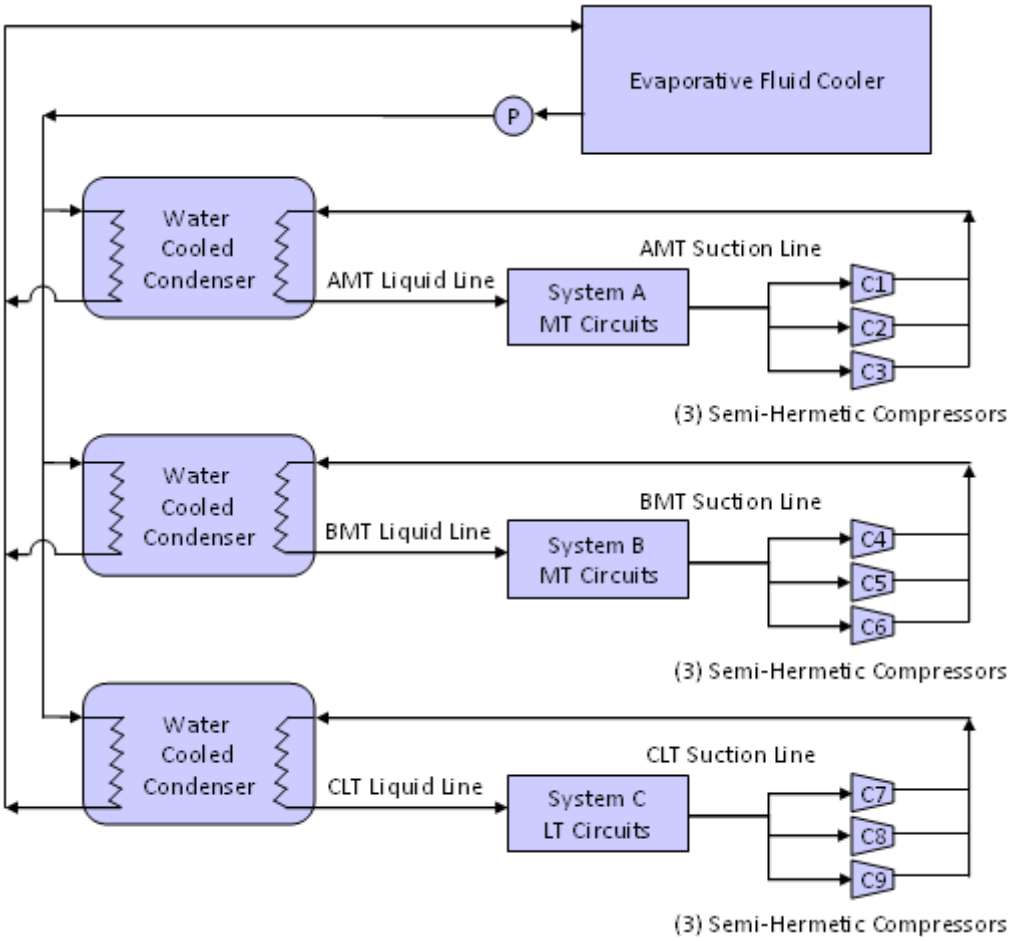

Figure 61: Large supermarket with central parallel rack compressor system and water-cooled condensers served by a central evaporative-cooled fluid cooler (MFC)

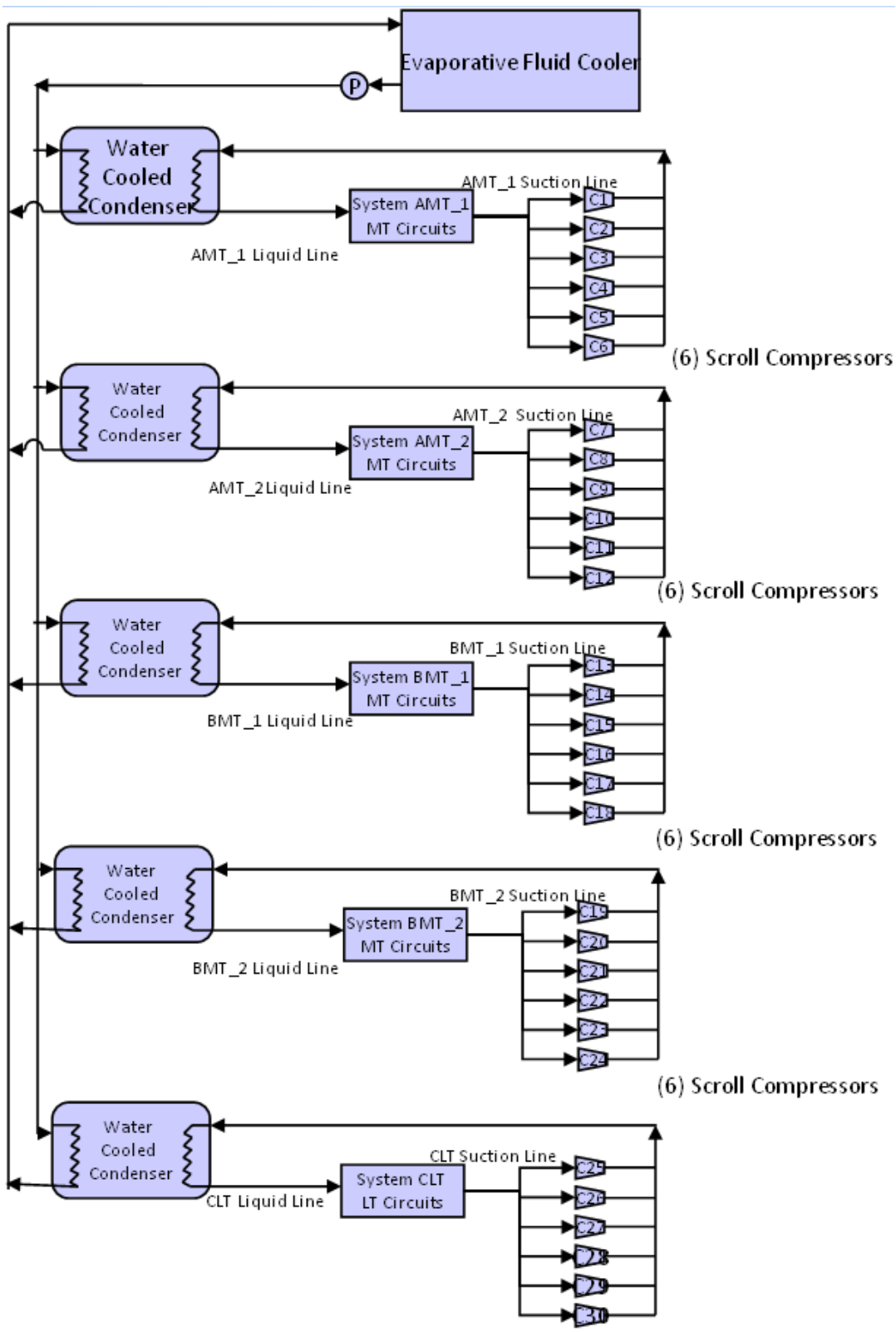

Figure 62: Large supermarket with distributed compressor systems and water-cooled condensers served by a central evaporative-cooled fluid cooler (MFD)

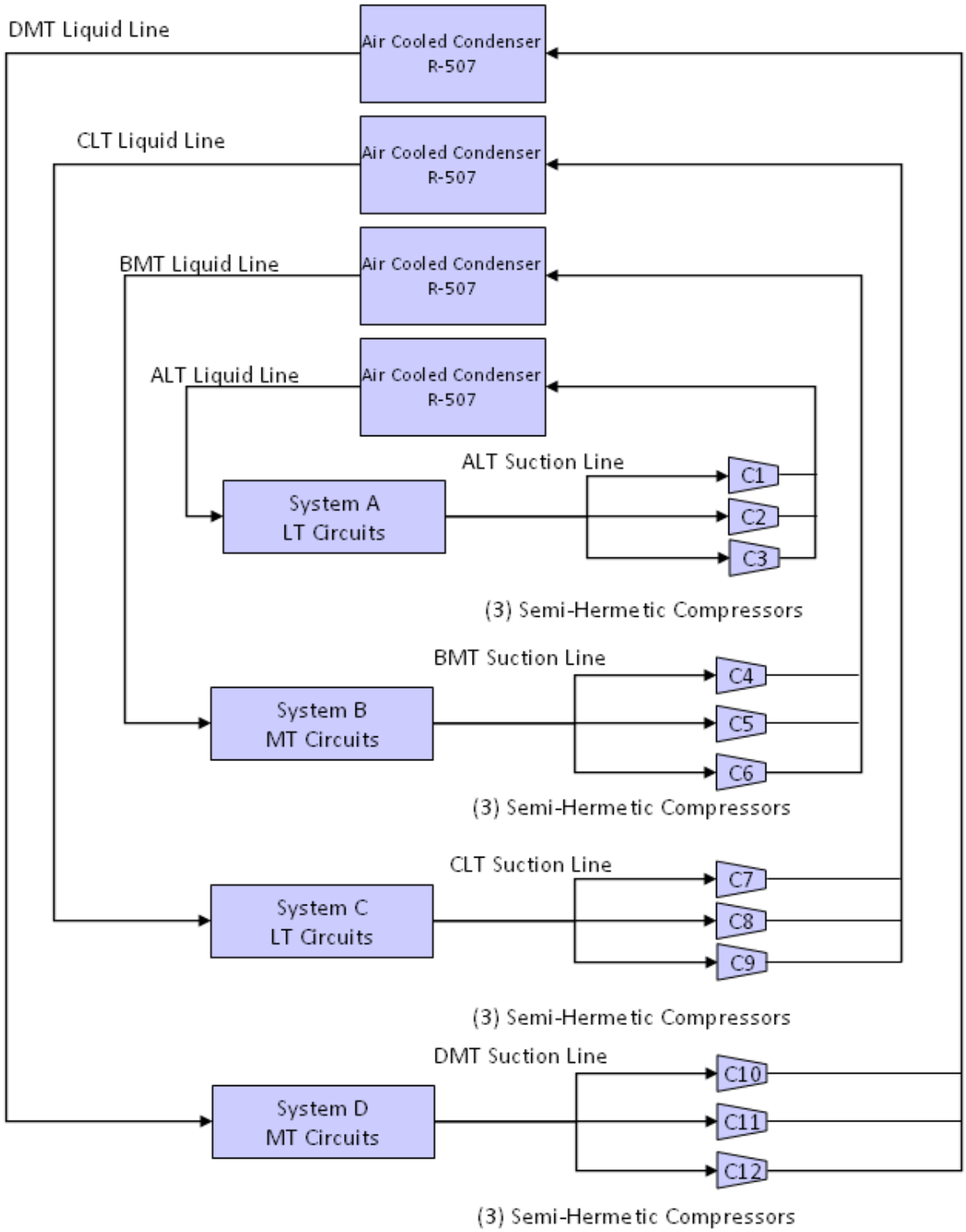

Figure 63: Big-box store with central parallel rack compressor system and air-cooled condensers (LAC)

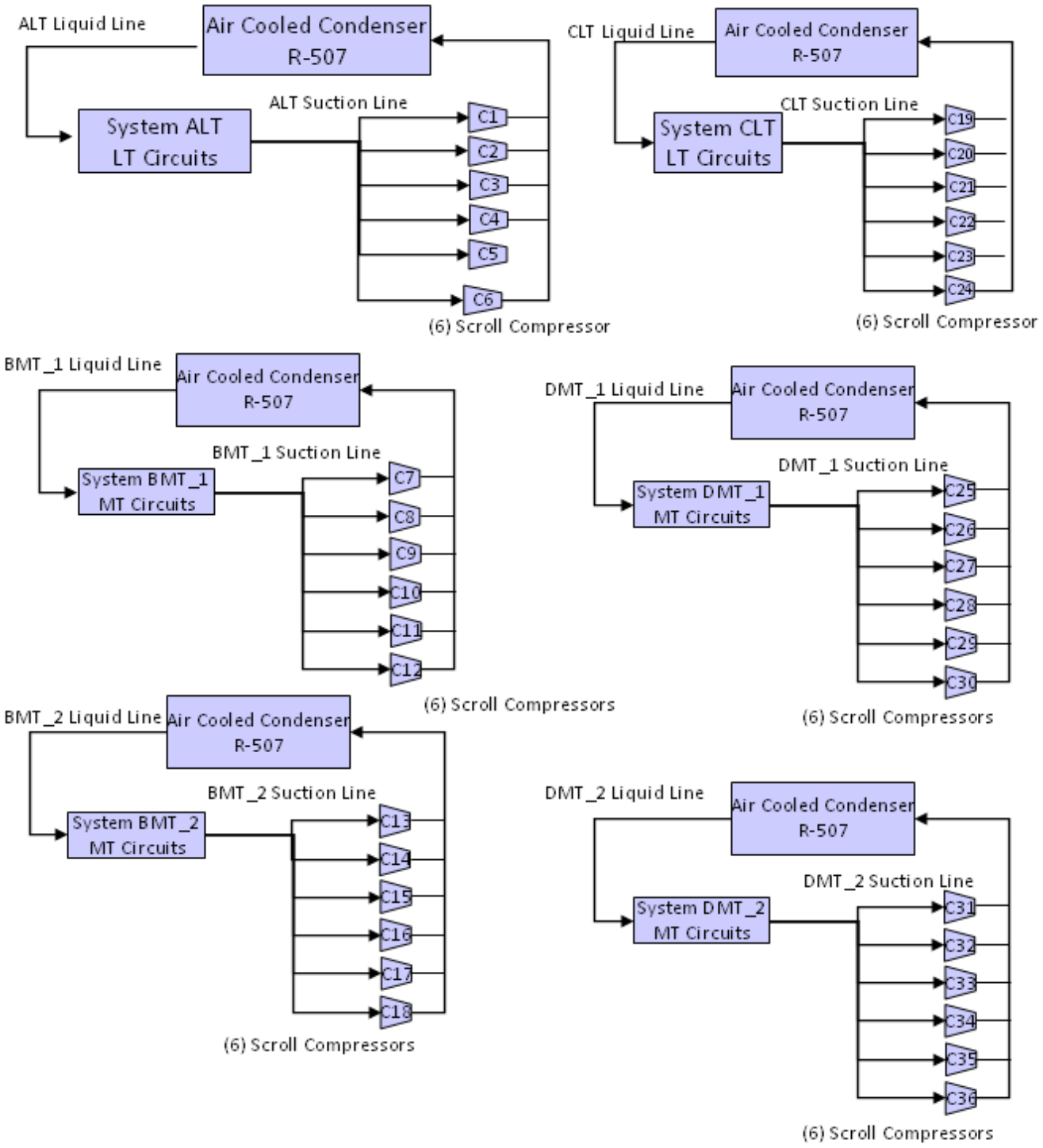

Figure 64: Big-box food store with distributed compressor systems and air-cooled condensers (LAD)

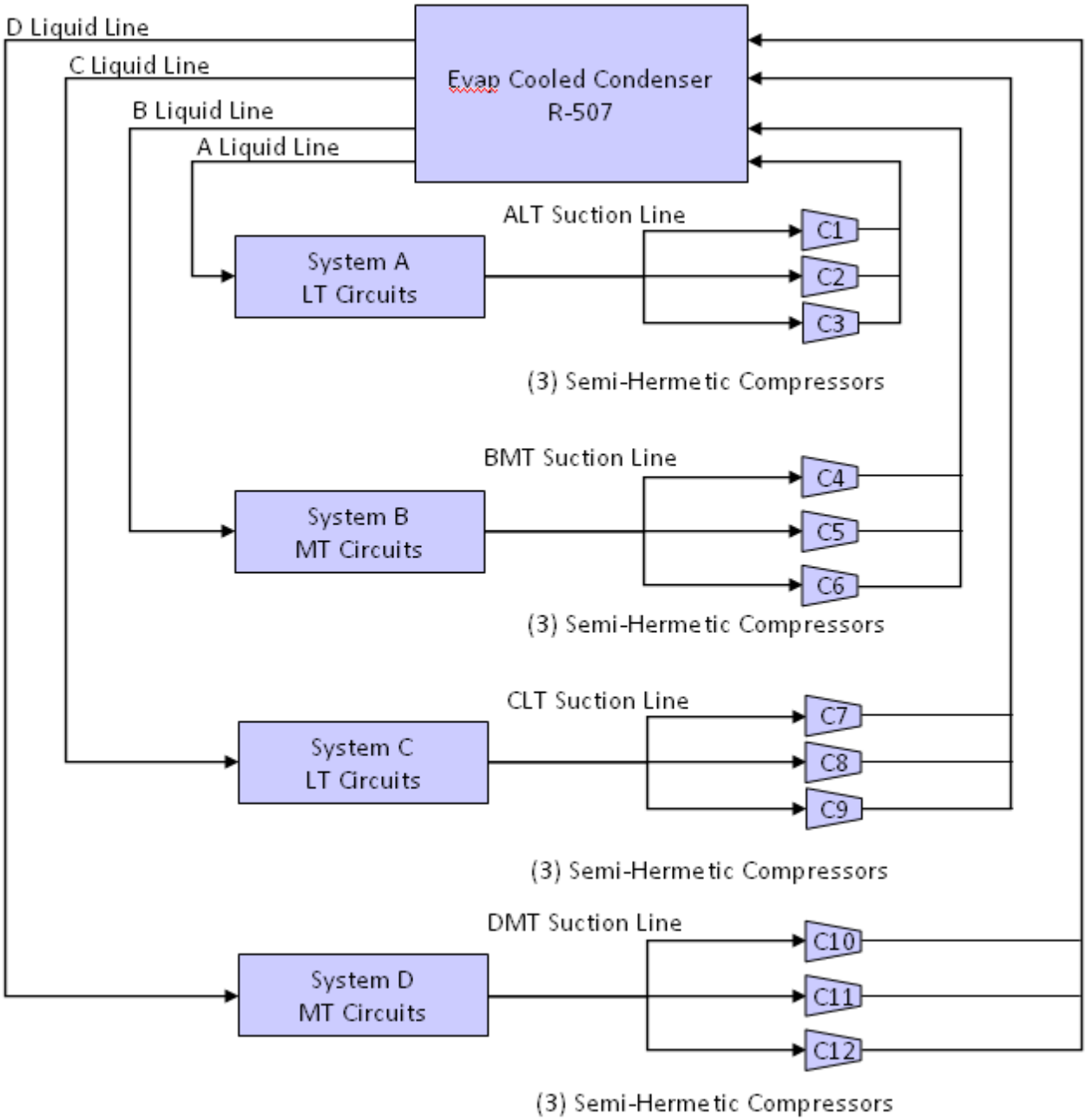

Figure 65: Big-box store with central parallel compressors and evaporative condenser (LEC)

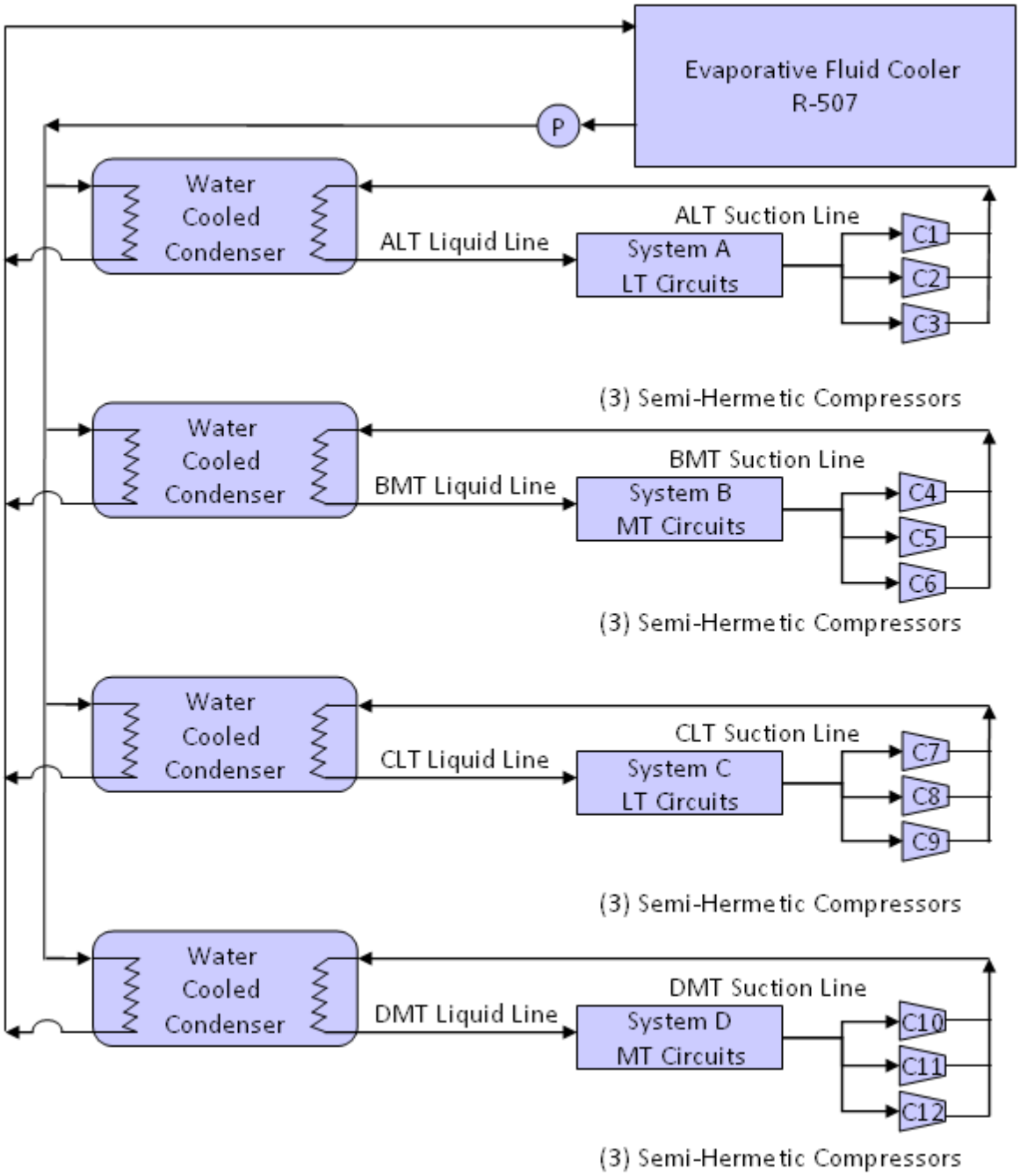

Figure 66: Big-box food store with central parallel rack compressor system and water-cooled condensers served by a central evaporative-cooled fluid cooler (LFC)

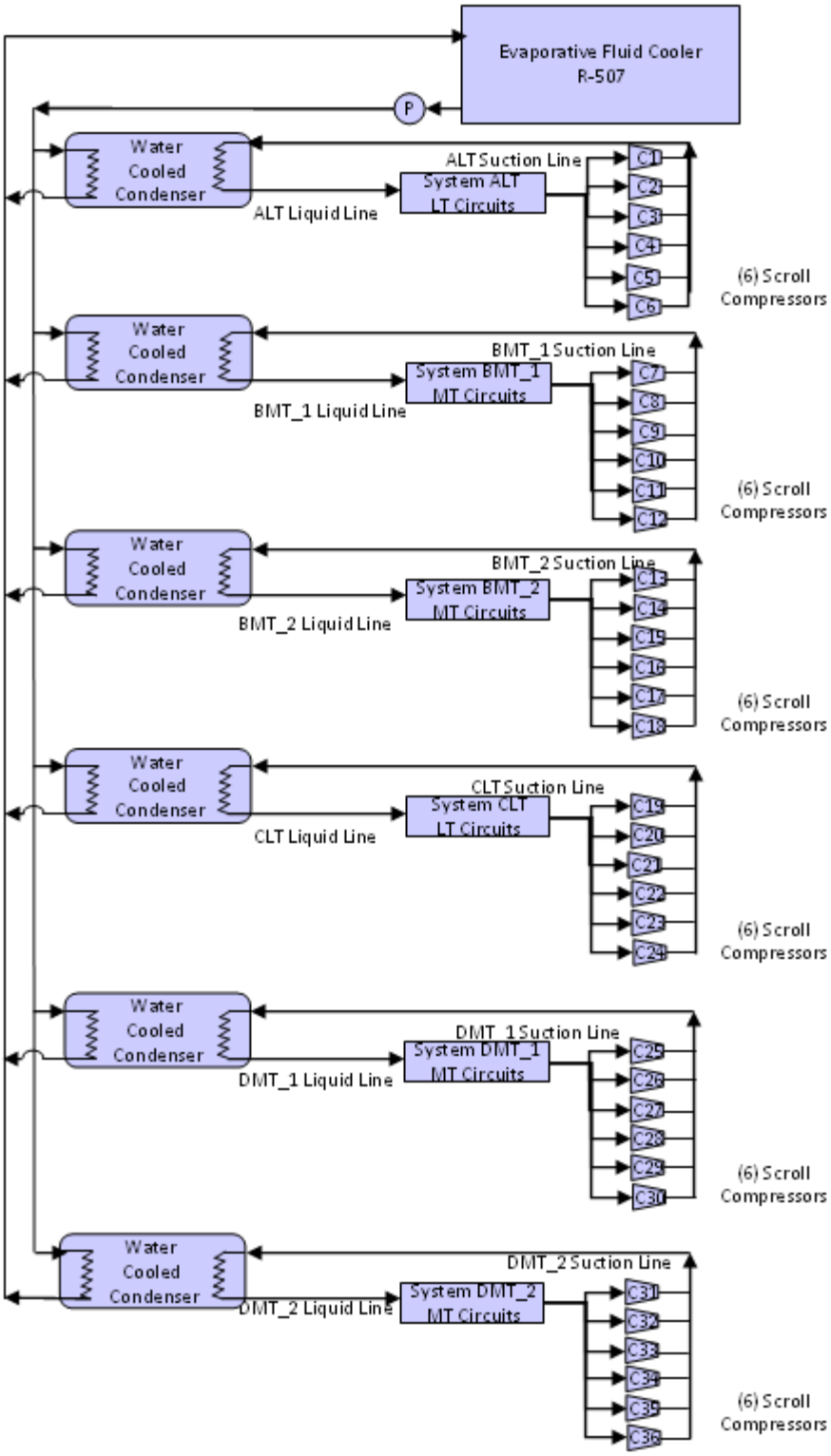

Figure 67: Large supermarket with distributed compressor systems and water-cooled condensers served by a central evaporative-cooled fluid cooler (MFD)

8. Appendix C: Base Case Facility Descriptions

The Base Case design is the starting point from which energy efficient design alternatives were considered. Typically, the Base Case would be defined as the current code requirements. However, there are no existing Title 24 requirements for supermarket refrigeration systems. Consequently, the Base Case for this analysis is based primarily on current industry-standard practice. Industry-standard practice is typified by the Base Case used and perfected in the California Savings By Design (SBD) program, a 10 year old, statewide effort to encourage energy efficiency. The SBD Base Case characteristics are rooted in extensive consultant experience with historical and recent supermarket industry standard practice. In addition, Title 20 appliance standards and federal walk-in requirements also dictate certain Base Case parameters. The Base Case design is comprised of the following assumptions:

Item	Small Supermarket	Large Supermarket	Big Box Food Store
System Information			
Refrigerant	R-404A	R-404A	R-507
System Type	Central or Distributed	Central or Distributed	Central or Distributed
Indirect System	None	None	None
Compressor Information			
Compressor Type	Semi-hermetic reciprocating compressors or Scroll compressors	Semi-hermetic reciprocating compressors or Scroll compressors	Semi-hermetic reciprocating compressors or Scroll compressors
Compressor Selection for Simulation	LT Semi-hermetic: 06DR316 MT Semi-hermetic: 06DR725 LT Scroll: ZF18K4E MT Scroll: ZB45KCE	LT Semi-hermetic: 06DR316 MT Semi-hermetic: 06DR725 LT Scroll: ZF18K4E MT Scroll: ZB45KCE	LT Semi-hermetic: 06DR316 MT Semi-hermetic: 06DR725 LT Scroll: ZF18K4E MT Scroll: ZB45KCE
Number of Suction Groups	(2) Two SST Levels: (1) LT Suction Group (1) MT Suction Group No AC Rack	(3) Three SST Levels: (1) LT Suction Group (2) MT Suction Groups No AC Rack	(6) Six SST Levels: (4) LT Suction Groups (2) MT Suction Groups No AC Rack
Means of compressor control	Fixed setpoint electronic sequencing control with on/off cycling	Fixed setpoint electronic sequencing control with on/off cycling	Fixed setpoint electronic sequencing control with on/off cycling
Subcooling	None	None	None
Condenser Information			
Condenser Type	Air cooled, evaporative cooled or fluid cooler	Air cooled, evaporative cooled or fluid cooler	Air cooled, evaporative cooled or fluid cooler
Ambient Temperature	Title 24 Joint Appendix JA2 0.1% for design Wet Bulb Temperature 0.1% for design Dry Bulb Temperature	Title 24 Joint Appendix JA2 0.1% for design Wet Bulb Temperature 0.1% for design Dry Bulb Temperature	Title 24 Joint Appendix JA2 0.1% for design Wet Bulb Temperature 0.1% for design Dry Bulb Temperature
Condenser Selection TD (Air cooled condenser)	LT: 10°F TD MT: 15°F TD	LT: 10°F TD MT: 15°F TD	LT: 10°F TD MT: 15°F TD
Condenser Selection TD (Evaporative cooled condenser)	Between 20°F and 25°F TD, based on WBT:	Between 20°F and 25°F TD, based on WBT:	Between 20°F and 25°F TD, based on WBT:

	78°F WBT: 20°F TD 72°F WBT: 23°F TD 68°F WBT: 25°F SCT Picked the closest TD for the ambient temperature	78°F WBT: 20°F TD 72°F WBT: 23°F TD 68°F WBT: 25°F SCT Picked the closest TD for the ambient temperature	78°F WBT: 20°F TD 72°F WBT: 23°F TD 68°F WBT: 25°F SCT Picked the closest TD for the ambient temperature
Water-cooled condensers and Fluid Cooler Selection TD (Water cooled condenser)	Water-cooled condenser approach: 20 F Fluid cooler approach: 78°F WBT: 15°F TD 72°F WBT: 17°F TD 68°F WBT: 20°F SCT Picked the closest TD for the ambient temperature	Water-cooled condenser approach: 20 F Fluid cooler approach: 78°F WBT: 15°F TD 72°F WBT: 17°F TD 68°F WBT: 20°F SCT Picked the closest TD for the ambient temperature	Water-cooled condenser approach: 20 F Fluid cooler approach: 78°F WBT: 15°F TD 72°F WBT: 17°F TD 68°F WBT: 20°F SCT Picked the closest TD for the ambient temperature
Condenser Specific Efficiency (Air cooled condenser & Evaporative cooled condenser)	140 BTU/W for evaporative @ 100ºF SCT & 70ºF WBT 53 BTU/W for air-cooled @ 10ºF TD	140 BTU/W for evaporative @ 100ºF SCT & 70ºF WBT 53 BTU/W for air-cooled @ 10ºF TD	140 BTU/W for evaporative @ 100ºF SCT & 70ºF WBT 53 BTU/W for air-cooled @ 10ºF TD
Condenser Specific Efficiency (Water cooled condensers & Fluid cooler)	Fluid cooler specific efficiency: 105 Btu/W Fluid cooler pump is controlled at a fixed speed.	Fluid cooler specific efficiency: 105 Btu/W Fluid cooler pump is controlled at a fixed speed.	Fluid cooler specific efficiency: 105 Btu/W Fluid cooler pump is controlled at a fixed speed.
Condenser Fan Motor Power and Efficiency	Motor power is inherent in the Base Case specific efficiency calculation.	Motor power is inherent in the Base Case specific efficiency calculation.	Motor power is inherent in the Base Case specific efficiency calculation.
Means of condenser control	Fixed setpoint strategy Air cooled: fan cycling based on pressure Evaporative cooled: two-speed fan control	Fixed setpoint strategy Air cooled: fan cycling based on pressure Evaporative cooled: two-speed fan control	Fixed setpoint strategy Air cooled: fan cycling based on pressure Evaporative cooled: two-speed fan control
Minimum condensing temperature setpoint	85°F SCT	80°F SCT	80°F SCT
Pressure drop at SDT and SCT	2°F	2°F	2°F
Heat recovery (air)	None	None	None
Heat recovery (domestic hot water heating)	None	None	None
Walk-ins and Unit coolers Information			

Fan Motor Type	Electronically commutated motors (ECM) in walk-in evaporator coils for all fan motors < 460V and < 1 hp. Otherwise, PSC fan motors.	Electronically commutated motors (ECM) in walk-in evaporator coils for all fan motors < 460V and < 1 hp. Otherwise, PSC fan motors.	Electronically commutated motors (ECM) in walk-in evaporator coils for all fan motors < 460V and < 1 hp. Otherwise, PSC fan motors.
Walk-in insulation level	R-25 for cooler walls, ceiling and doors R-32 for freezer walls, ceiling and doors R-28 for freezer floors	R-25 for cooler walls, ceiling and doors R-32 for freezer walls, ceiling and doors R-28 for freezer floors	R-25 for cooler walls, ceiling and doors R-32 for freezer walls, ceiling and doors R-28 for freezer floors
Walk-ins served by System A	LT Suction Group: (1) Freezer, (18 x 8 x 9) ft^3 MT Suction Group: (1) Dairy Cooler, (43 x 8 x 9) ft^3 (1) Produce Cooler, (11 x 8 x 9) ft^3	MT Suction Group: (1) Deli Cooler, (8 x 8 x 10) ft^3 (1) Wine Cooler, (11 x 11 x 10) ft^3 (1) Produce Cooler, (20 x 20 x 10) ft^3	LT Suction Group: (1) ½ POS Freezer #1 (19 x 80 x 22) ft^3 (1) ½ POS Freezer #2 (19 x 80 x 22) ft^3 (1) Bakery Freezer, (19 x 33 x 20) ft^3
Walk-ins served by System B	None	MT Suction Group: (1) Bakery Retarder, (10 x 7 x 10) ft^3 (1) Dairy Cooler, (41 x 16 x 10) ft^3 (1) Meat Cooler, (15 x 36 x 10) ft^3 (1) Meat Holding, (13 x 7 x 10) ft^3	MT Suction Group: (1) Meat Cooler, 1,504 ft^2, Height: 20 ft, odd-shaped (1) Produce Cooler, (36 x 44 x 22) ft^3 (1) Meat Prep, 1,162 ft^2, Height: 10 ft , odd-shaped (1) Dairy Cooler, (12 x 32 x 10) ft^3 (1) Bakery Cooler, (11 x 28 x 10) ft^3 (1) ½ POS Cooler (19 x 80 x 22) ft^3
Walk-ins served by System C	None	LT Suction Group: (1) Bakery Freezer, (18 x 18 x 10) ft^3 (1) Grocery Freezer, (36 x 15 x 10) ft^3	LT Suction Group: (1) ½ POS Freezer #1 (19 x 80 x 22) ft^3 (1) ½ POS Freezer #2, (19 x 80 x 22) ft^3 (1) Bakery Freezer, (11 x 28 x 10) ft^3
Walk-ins served by System D	None	None	MT Suction Group: (1) Meat Cooler, 1,504 ft^2, Height:

			20 ft, odd-shaped (1) Produce Cooler, (36 x 44 x 22) ft^3 (1) Deli Prep, 400 ft^2, Height: 10 ft, odd-shaped (1) Rotisserie Prep, 188 ft^2, Height: 10 ft, odd-shaped (1) Bakery Cooler, (11 x 28 x 10) ft^3 (1) ½ POS Cooler (19 x 80 x 22) ft^3
Fan Motor Power	Fan motor input wattage	Fan motor input wattage	Fan motor input wattage
Fan Control	Continuous operation with no VFD	Continuous operation with no VFD	Continuous operation with no VFD
Liquid-suction heat exchangers (direct refrigerant)	None	None	None
Leaving Gas Temperature	LT: 30°F MT: 20°F	LT: 30°F MT: 20°F	LT: 30°F MT: 20°F
Defrost Assumptions	Defrost Load: 70% of design load Defrost Effectiveness: 15% Quantity of Defrosts per Day: 4 Defrost Duration: 15 minutes	Defrost Load: 70% of design load Defrost Effectiveness: 15% Quantity of Defrosts per Day: 4 Defrost Duration: 15 minutes	Defrost Load: 70% of design load Defrost Effectiveness: 15% Quantity of Defrosts per Day: 4 Defrost Duration: 15 minutes
Display Case Information			
Case light wattage	Fixture efficiency – standard offer published by manufacturer.	Fixture efficiency – standard offer published by manufacturer.	Fixture efficiency – standard offer published by manufacturer.
Case lighting configuration assumptions	For multi-deck meat and deli cases: 2 row canopy lights + all shelves lighted (if available) For multi-deck dairy, beverage and produce cases: 2 row canopy lights + no lighted shelves	For multi-deck meat and deli cases: 2 row canopy lights + all shelves lighted (if available) For multi-deck dairy, beverage and produce cases: 2 row canopy lights + no lighted shelves	For multi-deck meat and deli cases: 2 row canopy lights + all shelves lighted (if available) For multi-deck dairy, beverage and produce cases: 2 row canopy lights + no lighted shelves
Display Case Reach-in Glass Door anti-sweat heater type & wattage	Low wattage doors	Low wattage doors	Low wattage doors
Display Case Reach-in Glass Door anti-sweat heater control on glass door cases	None	None	None
Night curtains/covers	None	None	None

Indirect Cooling for Display Cases	None	None	None
Defrost Type	Electric, Off Cycle or Hot Gas	Electric, Off Cycle or Hot Gas	Electric, Off Cycle or Hot Gas
Defrost Control	Time initiated, per manufacturers frequency. Temperature terminated on LT electric defrost only	Time initiated, per manufacturers frequency. Temperature terminated on LT electric defrost only	Time initiated, per manufacturers frequency. Temperature terminated on LT electric defrost only
Liquid-suction heat exchangers (direct refrigerant)	None	None	None
Electronic expansion valves/case controllers	None	None	None
Leaving Gas Temperature	LT: 30°F MT: 20°F	LT: 30°F MT: 20°F	LT: 30°F MT: 20°F
Display Case served by System A	MT Suction Group: (1) Kysor Warren HQD6L, MD Produce, Case Length: 16 ft (1) Kysor Warren QD6L, MD Meat, Case Length: 24 ft (1) Kysor Warren QD6NL, MD Deli, Case Length: 24 ft (1) Kysor Warren HQD6L, MD Deli, Case Length: 8 ft (1) Kysor Warren HQD6L, MD Deli, Case Length: 24 ft (1) Kysor Warren HQD6L, MD Beverage, Case Length: 8 ft (1) Kysor Warren B33, MD Cake, Case Length: 8 ft (1) Kysor Warren HQD6L, MD Package, Case Length: 12 ft (1) Kysor Warren QDV5V, RI Dairy, Number of Doors: 7	MT Suction Group: (1) Sushi Bar, MD Case, Case Length: 3 ft (1) Sushi, MD Case, Case Length: 8 ft (1) Sandwich Prep, MD Case, Case Length: 10 ft (1) Hussmann RGPSM, Pizza, Case Length: 8 ft (1) Hussmann ESBDVS, Service Deli, Case Length: 28 ft (1) Hussmann RBB, Cheese Back Bar, Case Length: 12 ft (1) Hussmann Q1+Wedges, SS Cheese, Case Length: 26 ft (1) Hussmann RI4, Cheese Table, Case Length: 12 ft (1) Hussmann D5XLEP, SS Deli, Case Length: 32 ft (1) Hussmann D5XLEP, Beverage, Case Length: 56 ft (1) Hussmann E3, Grab-N-Go, Case Length: 16 ft	LT Suction Group: (1) Hill Phoenix ONZ, Dual Temp Island Case Length: 160 ft Evaporator Temperature: -22°F Discharge Temperature: -13°F Fan Power: 11 W/ft No. Fans per 12 ft: 4 Canopy Light W: None Shelf Light W: None No. Canopy Lights: None No. Shelves w/ Lights: None Defrost Type: Hot Gas Defrost Freq x Duration: 2 x 20 minutes
Display Case served by System B	None	(1) Structural Concepts, HVOU,	MT Suction Group:

		Bakery Service, Case Length: 16 ft (1) Beverage Air Corp, CDR3950, Service/Cookie, Case Length: 5 ft (1) Beverage Air Corp, CDR3968, Refrigerated Cash Stand, Case Length: 5 ft (1) Hussmann RI3, Bakery, Case Length: 10 ft (1) Hussmann D5XLEP, Egg, Case Length: 12 ft (1) Hussmann D5XLEP, Dairy, Case Length: 70 ft (1) Hussmann D5XLEP, Pizza, Case Length: 6 ft (1) Hussmann E2V, Fish, Case Length: 8 ft (1) Hussmann DSF, Service Fish, Case Length: 12 ft (1) Hussmann ESGMVS, Service Meat, Case Length: 12 ft	(1) Hill Phoenix OMZ, Single-deck Deli, Case Length: 80 ft (1) Hill Phoenix O3.75UM, Deli Island, Case Length: 120 ft
Display Case served by System C	None	LT Suction Group: (1) Hussmann RL, Reach-in Ice Cream, Case Length: 58 doors (1) Hussmann RL, Reach-in Frozen Food, Case Length: 59 doors	LT Suction Group: (1) Hill Phoenix ONZ, Dual Temp Island, Case Length: 80 ft (1) Hussmann RID, Roll-in Bakery, Case Length: 12 ft
Display Case served by System D	None	None	MT Suction Group: (1) Hill Phoenix OMZ, Single-deck Deli, Case Length: 56 ft (1) Hill Phoenix OMZ, Single-deck Deli, Case Length: 36 ft
Point of Sale (POS) Boxes with Reach-in (RI) Glass Doors	None	None	(2) POS Freezer with RI Glass Doors, Number of Doors: 54 ea. Freezer (1) POS Cooler with RI Glass

			Doors, Number of Doors: 59
POS Box Reach-in Glass Door anti-sweat heater type & wattage	Low wattage doors	Low wattage doors	Low wattage doors
Operation, Occupancy & Schedules Information			
Facility size	10,000 ft^2 (gross area)	60,700 ft^2 (gross area) 57,200 ft^2 (conditioned area)	150,000 ft^2 (gross area)
Main Sales Interior Spaces Height	15 ft	28 ft	28 ft
Building HVAC Information			
Packaged rooftop units (RTU)	Packaged Rooftop Units with EER per Title 24 standards No. of Packaged Rooftop Units: 3	Packaged Rooftop Units with EER per Title 24 standards No. of Packaged Rooftop Units: 8	Packaged Rooftop Units with EER per Title 24 standards No. of Packaged Rooftop Units: 18
Main Air Handling Unit	None	(1) Main Air Handler Unit for Main Sales area with supply fan motor efficiency per Title 24.	None
Fan Operation	Always On	Always On	Always on if 24 hour store, follow store hours if non-24 hours, with pre-opening allowance and ambient override allowed.
Temperature Control	Two fixed setpoints No night setpoint adjustment	Two fixed setpoints No night setpoint adjustment	Two fixed setpoints No night setpoint adjustment
Main Sales HVAC Cooling Setpoint	74°F	74°F	74°F
Main Sales HVAC Heating Setpoint	70°F	70°F	70°F
Ventilation Control	Always On	Always On	Always On
Envelope & Lighting			
Exterior Roof Construction	U-factor based on Title 24 – Table 143-A Prescriptive Envelope Criteria for Roofs	U-factor based on Title 24 – Table 143-A Prescriptive Envelope Criteria for Roofs	U-factor based on Title 24 – Table 143-A Prescriptive Envelope Criteria for Roofs
Exterior Wall Construction	U-factor based on Title 24 – Table 143-A Prescriptive Envelope Criteria for Walls	U-factor based on Title 24 – Table 143-A Prescriptive Envelope Criteria for Walls	U-factor based on Title 24 – Table 143-A Prescriptive Envelope Criteria for Walls
Roof Absorptivity	AGED Reflectance = 0.55 (Title 24 – Table 143-A)	AGED Reflectance = 0.55 (Title 24 – Table 143-A)	AGED Reflectance = 0.55 (Title 24 – Table 143-A)

Skylights	No Skylights. Skylights are not required for enclosed spaces with ceiling heights equal to or less than 15 feet.	Approximately 1.65% (3.3% minimum skylight area to skylit ratio * 50% of floor area) of sales area is covered by skylights.	Approximately 1.65% (3.3% minimum skylight area to skylit ratio * 50% of floor area) of sales area is covered by skylights.
Skylight Characteristics	No Skylights	Skylight Type: Glass, curb U-factor: 1.11 SHGC: 0.46 Visible Transmittance: 0.552 Light setpoint: 75 foot-candles	Skylight Type: Glass, curb U-factor: 1.11 SHGC: 0.46 Visible Transmittance: 0.552 Light setpoint: 55 footcandles
Daylighting Controls	None	Power consumption reduction of lighting by at least 2/3 in response to available daylight. (Three step control: 100%, 67%, 33% & 0%)	Power consumption reduction of lighting by at least 2/3 in response to available daylight. (Three step control: 100%, 67%, 33% & 0%)
Lighting Power Density (except for Walk-in Coolers & Freezers)	1.5 W/ ft^2 (Complete Building Method)	1.5 W/ ft^2 (Complete Building Method)	1.5 W/ ft^2 (Complete Building Method)
Lighting Power Density (Walk-in Coolers & Freezers)	0.7 W/ ft^2	0.7 W/ ft^2	0.7 W/ ft^2
Lighting Control (Main Sales)	Non-24 hours stores: 50% reduction during non-operating hours	24 hr stores: Always ON 100%	Non-24 hours stores: 50% reduction during non-operating hours

9. Appendix D: Refrigeration Schedules and Equipment Sizing

Refrigeration Schedules

Figure 68, Figure 69, and Figure 70 summarize the refrigeration load schedules employed for this analysis

Suction Group ID - Central	Suction Group ID - Distributed	Load ID	Size lxwxh #drs or ft	Description	Type	Load	Evap Temp	Disc Air Temp	Def Type
ALT	ALT	ALT-1	18x8x9	Freezer	Walk-in Freezer	12,100	-20	-10	Electric
ALT	ALT	ALT-2	8	RI Icecream	Display Case	11,160	-23	-16	Electric
ALT	ALT	ALT-3	8	RI Frozen Food 1	Display Case	10,680	-23	-16	Electric
ALT	ALT	ALT-4	8	RI Frozen Food 2	Display Case	10,680	-18	-9	Electric
ALT	ALT	ALT-5	8	RI Frozen Food 3	Display Case	10,680	-18	-9	Electric
ALT	ALT	ALT-6	8	RI Frozen Food 4	Display Case	10,680	-18	-9	Electric
ALT	ALT	ALT-7	8	RI Frozen Food 5	Display Case	10,680	-18	-9	Electric
						76,660	**-25°F Design SST**		
BMT	BMT_1	BMT-1	43x8x9	Dairy Cooler	Walk-in Cooler	21,400	+24	+34	Off Cycle
BMT	BMT_2	BMT-2	11x8x9	Produce Cooler	Walk-in Cooler	5,600	+50	+60	Off Cycle
BMT	BMT_2	BMT-3	32	MD Produce	Display Case	43,808	+30	+35	Off Cycle
BMT	BMT_1	BMT-4	40	MD Meat	Display Case	55,400	+23	+33	Off Cycle
BMT	BMT_2	BMT-5	32	MD Deli - 1	Display Case	42,208	+23	+33	Off Cycle
BMT	BMT_2	BMT-6	32	MD Deli - 2	Display Case	43,808	+23	+33	Off Cycle
BMT	BMT_2	BMT-7	24	MD Deli - 3	Display Case	32,856	+30	+35	Off Cycle
BMT	BMT_1	BMT-8	20	MD Beverage	Display Case	27,380	+30	+35	Off Cycle
BMT	BMT_1	BMT-9	8	MD Cake	Display Case	8,000	+30	+35	Off Cycle
BMT	BMT_1	BMT-10	24	MD Package	Display Case	32,856	+23	+33	Off Cycle
BMT	BMT_1	BMT-11	11	Reach-in Dairy	Display Case	8,250	+30	+35	Off Cycle
						321,566	**21°F Design SST**		

Figure 68: Small supermarket refrigeration schedule

Suction Group ID - Central	Suction Group ID - Distributed	Load ID	Size lxwxh #drs or ft	Description	Type	Load	Evap Temp	Disc Air Temp	Def Type
AMT	AMT_1	AMT-1	8x8x10	Deli Cooler	Walk-in Cooler	5,900	+26	+36	Off Cycle
AMT	AMT_1	AMT-2	11x11x10	Wine Cooler	Walk-in Cooler	9,260	+26	+36	Off Cycle
AMT	AMT_2	AMT-3	20x20x10	Produce Cooler	Walk-in Cooler	21,800	+26	+36	Off Cycle
AMT	AMT_1	AMT-4	780	Meat_Prep	Walk-in Cooler	78,400	+36	+50	Off Cycle
AMT	AMT_2	AMT-5	3	Sushi Bar	Display Case	3,600	+20	+28	Off Cycle
AMT	AMT_2	AMT-6	8	Sushi	Display Case	9,400	+20	+24	Off Cycle
AMT	AMT_2	AMT-7	10	Sandwich Prep	Display Case	6,750	+20	+30	Off Cycle
AMT	AMT_2	AMT-8	8	MD Pizza, Front	Display Case	8,200	+20	+30	Off Cycle
AMT	AMT_1	AMT-9	20	Service Deli	Display Case	6,400	+20	+25	Off Cycle
AMT	AMT_1	AMT-10	12	Cheese Back Bar	Display Case	18,600	+20	+30	Off Cycle
AMT	AMT_1	AMT-11	26	Self-serve Cheese	Display Case	17,160	+20	+27	Off Cycle
AMT	AMT_1	AMT-12	12	Cheese Table	Display Case	27,500	+20	+27	Off Cycle
AMT	AMT_1	AMT-13	32	MD Self-serve Deli	Display Case	48,320	+26	+30	Off Cycle
AMT	AMT_2	AMT-14	48	MD Beverage	Display Case	72,480	+26	+30	Off Cycle
AMT	AMT_2	AMT-15	16	Grab-N-Go	Display Case	18,880	+21	+29	Off Cycle
AMT	AMT_1	AMT-16	20	Meat 1	Display Case	29,800	+26	+30	Off Cycle
AMT	AMT_1	AMT-17	20	Meat 2	Display Case	29,800	+26	+30	Off Cycle
AMT	AMT_2	AMT-18	24	Lunch Meat 1	Display Case	36,240	+26	+30	Off Cycle
AMT	AMT_2	AMT-19	28	Lunch Meat 2	Display Case	42,280	+26	+30	Off Cycle
			287			**490,770**	**18°F Design SST**		
BMT	BMT_1	BMT-1	10x7x10	Bakery Retarder	Walk-in Cooler	6,250	+26	+36	Off Cycle
BMT	BMT_2	BMT-2	41x16x10	Dairy Cooler	Walk-in Cooler	35,550	+26	+36	Off Cycle
BMT	BMT_2	BMT-3	15x36x10	Meat Cooler	Walk-in Cooler	30,150	+26	+36	Off Cycle
BMT	BMT_1	BMT-4	13x7x10	Meat Holding	Walk-in Cooler	7,550	+26	+36	Off Cycle
BMT	BMT_1	BMT-5	10x7x10	Floral_Cooler	Walk-in Cooler	5,800	+32	+38	Off Cycle
BMT	BMT_1	BMT-6	16	Bakery Service	Display Case	17,520	+20	+25	Off Cycle
BMT	BMT_1	BMT-7	5	Service Cookie	Display Case	1,490	+30	+35	Off Cycle
BMT	BMT_1	BMT-8	5	Refrigerated Stand	Display Case	1,650	+30	+35	Off Cycle
BMT	BMT_1	BMT-9	10	Bakery	Display Case	18,200	+20	+27	Off Cycle
BMT	BMT_1	BMT-10	12	MD Egg	Display Case	18,120	+26	+30	Off Cycle
BMT	BMT_2	BMT-11	64	MD Dairy	Display Case	96,640	+26	+30	Off Cycle
BMT	BMT_1	BMT-12	6	MD Pizza	Display Case	9,060	+26	+30	Off Cycle
BMT	BMT_1	BMT-13	8	MD Fish	Display Case	7,560	+18	+25	Off Cycle
BMT	BMT_1	BMT-14	12	Service Fish	Display Case	4,800	+20	+28	Off Cycle
BMT	BMT_2	BMT-15	12	Service Meat	Display Case	3,840	+22	+27	Off Cycle
BMT	BMT_2	BMT-16	28	Produce 1	Display Case	29,400	+24	+33	Off Cycle
BMT	BMT_2	BMT-17	32	Produce 2	Display Case	33,600	+24	+33	Off Cycle
BMT	BMT_2	BMT-18	16	ProducePromo	Display Case	10,880	+26	+31	Off Cycle
BMT	BMT_2	BMT-19	6	Produce End	Display Case	10,710	+24	+32	Off Cycle
BMT	BMT_1	BMT-20	20	Produce 3	Display Case	35,700	+24	+32	Off Cycle
BMT	BMT_1	BMT-21	24	Produce 4	Display Case	42,840	+24	+32	Off Cycle
BMT	BMT_1	BMT-22	20	Produce 5	Display Case	27,800	+28	+31	Off Cycle
BMT	BMT_1	BMT-23	6	JuiceEnd	Display Case	10,710	+24	+32	Off Cycle
BMT	BMT_1	BMT-24	8	Natural Foods	Display Case	12,240	+26	+30	Off Cycle
BMT	BMT_1	BMT-25	12	ProducePromo_2	Display Case	14,160	+21	+29	Off Cycle
			322			**492,220**	**16°F Design SST**		
CLT	CLT	CLT-1	18x18x10	Bakery Freezer	Walk-in Freezer	20,300	-15	-5	Hot Gas
CLT	CLT	CLT-2	12x8x10	Deli Freezer	Walk-in Freezer	8,600	-15	-5	Hot Gas
CLT	CLT	CLT-3	36x15x10	Grocery Freezer	Walk-in Freezer	30,250	-15	-5	Hot Gas
CLT	CLT	CLT-4	62	Reach-in Ice Cream	Display Case	84,940	-17	-12	Hot Gas
CLT	CLT	CLT-5	62	Reach-in Frozen Food	Display Case	80,600	-9	-5	Hot Gas
CLT	CLT	CLT-6	(1/2) 12 + (1) END	DUAL TEMP - 1	Display Case	6,570	-20	-12	Hot Gas
CLT	CLT	CLT-7	(1/2) 12 + (1) END	DUAL TEMP - 2	Display Case	6,570	-20	-12	Hot Gas
CLT	CLT	CLT-8	(1/2) 16 + (1) END	DUAL TEMP - 3	Display Case	7,870	-20	-12	Hot Gas
CLT	CLT	CLT-9	(1/2) 16 + (1) END	DUAL TEMP - 4	Display Case	7,870	-20	-12	Hot Gas
CLT	CLT	CLT-10	(1/2) 12 + (1) END	DUAL TEMP - 5	Display Case	6,570	-20	-12	Hot Gas
CLT	CLT	CLT-11	(1/2) 12 + (1) END	DUAL TEMP - 6	Display Case	6,570	-20	-12	Hot Gas
CLT	CLT	CLT-12	6	NATURAL FOODS	Display Case	8,220	-9	-5	Hot Gas
						274,930	**-22°F Design SST**		

Figure 69: Large supermarket refrigeration schedule

Suction Group ID - Central	Suction Group ID - Distributed	Load ID	Size lxwxh or sf #drs or ft	Description	Type	Load	Evap Temp	Disc Air Temp	Def Type
ALT	ALT	ALT-1	19x80x22	1/2 POS Freezer #1	Walk-in Freezer	136,000	-27	-22	Electric
ALT	ALT	ALT-2	19x80x22	1/2 POS Freezer #2	Walk-in Freezer	118,000	-16	-11	Electric
ALT	ALT	ALT1-3	160	Dual Temp Island	Display Case	68,000	-25	-10	Electric
ALT	ALT	ALT1-4	19x33x20	Bakery Freezer	Walk-in Freezer	32,000	-15	-10	Electric
						354,000		**-29°F Design SST**	
BMT	BMT_1	BMT-1	1504 sf	Meat Cooler	Walk-in Cooler	63,000	+20	+24	Off Cycle
BMT	BMT_2	BMT-2	36x44x22	Produce Cooler	Walk-in Cooler	97,000	+31	+32	Off Cycle
BMT	BMT_2	BMT-3	1162 sf	Meat Prep	Walk-in Cooler	70,000	+35	+39	Off Cycle
BMT	BMT_2	BMT-4	12x32x10	Dairy Cooler	Walk-in Cooler	47,600	+26	+29	Off Cycle
BMT	BMT_2	BMT-5	11x28x10	Bakery Cooler	Walk-in Cooler	12,250	+26	+29	Off Cycle
BMT	BMT_1	BMT-6	19x80x22	1/2 POS Cooler	Walk-in Cooler	94,000	+24	+28	Off Cycle
BMT	BMT_1	BMT-7	60	Meat	Display Case	25,500	+24	+28	Off Cycle
BMT	BMT_1	BMT-8	32	Deli	Display Case	13,600	+24	+28	Off Cycle
						422,950		**18°F Design SST**	
CLT	CLT1	CLT1-1	19x80x22	1/2 POS Freezer #1	Walk-in Freezer	136,000	-27	-22	Electric
CLT	CLT1	CLT1-2	80	Dual Temp Island	Display Case	34,000	-25	-10	Electric
CLT	CLT1	CLT1-3	19x80x22	1/2 POS Freezer #2	Walk-in Freezer	120,650	-15	-11	Electric
CLT	CLT1	CLT1-4	19x33x20	Bakery Freezer	Walk-in Freezer	32,000	-15	-10	Electric
CLT	CLT1	CLT1-5	12	Roll-in Bakery	Display Case	32,400	+12	+28	Electric
						355,050		**-29°F Design SST**	
DMT	DMT_1	DMT-1	1504 sf	Meat Cooler	Walk-in Cooler	63,000	+20	+24	Off Cycle
DMT	DMT_1	DMT-2	36x44x22	Produce Cooler	Walk-in Cooler	97,000	+31	+32	Off Cycle
DMT	DMT_2	DMT-3	400 sf	Deli Prep	Walk-in Cooler	32,890	+35	+37	Off Cycle
DMT	DMT_2	DMT-4	188 sf	Rotisserie Prep	Walk-in Cooler	11,500	+35	+40	Off Cycle
DMT	DMT_2	DMT-5	11x28x10	Bakery Cooler	Walk-in Cooler	12,250	+26	+29	Off Cycle
DMT	DMT_2	DMT-6	19x80x22	1/2 POS Cooler	Walk-in Cooler	94,000	+24	+28	Off Cycle
DMT	DMT_1	DMT-7	32	Produce 1	Display Case	35,200	+28	+32	Off Cycle
DMT	DMT_2	DMT-8	36	Dairy	Display Case	39,600	+21	+32	Off Cycle
						385,440		**18°F Design SST**	

Figure 70: Big-box store refrigeration schedule

Equipment Sizing per Climate Zone

Equipment sizing was established based on typical loads developed for representative new store designs for the three supermarket prototypes. The design loads for the representative stores were informed by actual supermarket projects completed in California. Loads that were accounted for in the equipment sizing include walk-in refrigerated boxes and refrigerated display cases. Large point-of-sale boxes with reach-in glass doors were included only in the equipment sizing for the Big Box Food Store. In the equipment selection process, a 1.10 safety factor was used for low temperature suction groups and a 1.20 safety factor was used for medium temperature suction groups. The refrigeration systems for each of the prototype supermarkets were sized using design climate data from the 2008 Joint Appendices. For calculating statewide savings, two system sizes were developed to typify standard design practice in the California climate zones that have the majority of supermarkets in the state. Figure 71 describes the three designs, and lists the climate zones where the designs were simulated.

Design	Climate Type	Design City	Design (0.1%) DBT/WBT	Simulated in Climate Zones
1	Mild Temperature	Santa Maria	90°F/67°F	CTZ01 - Arcata CTZ03 – Oakland CTZ05 – Santa Maria CTZ07 – San Diego (Lindbergh)
2	Medium/Hot-Temperature	Sacramento	104°F/74°F	CTZ08 – Fullerton CTZ10 – Riverside CTZ12 – Sacramento Executive Airport CTZ13 – Fresno CTZ14 – Palmdale CTZ15 – Palm Springs

Figure 71: Description of two design climate zones

10. Appendix E: Charge Size and Leak Rate Assumptions for Direct Emissions

To assess the direct greenhouse gas impacts (i.e., refrigerant emissions) of centralized direct expansion (DX) systems, distributed systems, and secondary loop systems, assumptions on system charge size and leak rates were developed, as presented in Table 1 and **Table 2**. Assumptions regarding store size and cooling capacity are consistent with those defined under the base case.

Table 1: Assumptions on Charge Size

System Configuration	Cooling Capacity (BTU/hr)	Store Size (sq ft)	Condenser Type	Centralized DX (lbs)	Distributed (lbs)	Secondary Loop (lbs)
Small Supermarket	249,353	10,000	Air	725	360	200
			Evaporative	800	400	220
			Fluid	435	215	120
Large Supermarket	1,257,920	60,000	Air	3,655	1,830	1,015
			Evaporative	4,020	2,015	1,115
			Fluid	2,195	1,100	610
Big Box Food Store	1,517,440	150,000	Air	4,410	2,205	1,225
			Evaporative	4,850	2,425	1,350
			Fluid	2,645	1,325	735

Table 2: Assumptions on Leak Rates

Leak Rate (percent of charge per year)	Centralized DX	Distributed	Secondary Loop
Average	12%	8%	5%
Range (of averages)	10% - 15%	5% - 10%	2% - 8%

The above assumptions were developed based on an in-depth review of available literature on system charge sizes and leak rates, as well as through consultation with equipment manufacturers and other industry experts. The remainder of this appendix outlines the specific sources and methodologies used in developing these assumptions, as well as the limitations that should be considered.

Summary of Information Obtained on Charge Size and Leak Rates

ICF reviewed the following sources to compile estimates on charge size and leak rates for DX systems, distributed systems, and secondary loop systems:

- Armines. 2009. Inventory of Direct and Indirect GHG Emissions from Stationary Air Conditioning and Refrigeration Sources, with Special Emphasis on Retail Food

Refrigeration and Unitary Air Conditioning. Prepared for State of California Air Resources Board. March 2009.

- Baxter, Van D. 2003. IEA Annex 26: Advanced Supermarket Refrigeration/Heat Recovery Systems. Oak Ridge National Laboratory. Available online at, http://www.ornl.gov/~webworks/cppr/y2003/rpt/117000.pdf.

- California Air Resource Board (CARB). 2009. *Initial Statement of Reasons for Proposed Rulemaking*. Prepared by C. Seidler, B Baythavong, G Gallagher, and K Bowers of the California Air Resource Board, Research Division. October 23, 2009. Available online at, http://www.arb.ca.gov/cc/reftrack/reftrackrefs.htm

- Heschong Mahone Group, Inc. and CTG Energetics, Inc. 2008. White Paper on Approaches to Reducing Leakage and Improving the Performance of Supermarket Refrigeration Systems. Prepared for the Southern California Edison.

- Intergovernmental Panel on Climate Change/Technical and Economic Assessment Panel (IPCC/TEAP). 2006. *2006 Report of the Refrigeration, Air Conditioning and Heat Pumps Technical Options Committee.*

- Minea, Vasile. 2007. Supermarket Refrigeration System with Completely Secondary Loops. *ASHRAE Journal*. September 2007.

- Sand, James R, Steven K. Fischer, Van D. Baxter. 1997. Energy and Global Warming Impacts of HFC Refrigerants and Emerging Technologies. Oak Ridge National Laboratory, sponsored by Alternative Fluorocarbons Environmental Acceptability Study (AFEAS), U.S. Department of Energy. Available online at http://www.ornl.gov/sci/engineering_science_technology/eere_research_reports/electrically_driven_heat_pumps/fluids_development/cfc_and_hcfc_replacements/tewi_3/tewi_3.pdf

- Southern California Edison (SCE) and Foster-Miller Inc. 2004. Investigation of Secondary Loop Supermarket Refrigeration Systems. Prepared by Faramarzi, R. and D Walker for the California Energy Commission. March 2004.

- U.S. Environmental Protection Agency. 2010. GreenChill's November Webinar: Condenser Innovations for Commercial Refrigeration. Presented by Keilly Witman, U.S. EPA; Dustan Atkinson, Heatcraft Refrigerant Products; Harrison Horning, Hannaford Bros. Co; Jeff Waller, Hussmann; Paul Noreen, Muller Industries; Steve Hagen, Fresh & Easy. Available online at, https://meetingvisuals.webex.com/meetingvisuals/ldr.php?AT=pb&SP=MC&rID=59191997&rKey=adf5ccb68958e17d

In addition to the above sources, the following equipment manufacturers and sustainability resource planning firms were contacted: Hill Phoenix, Hussmann, Kysor/Warren, and Verisae.

Table 3 through Table 8 summarize the information compiled from industry contacts and published sources. It should be noted that data were often converted and manipulated to provide comparable units and figures. In addition, the context in which estimates were identified, as well

as their relevance to the systems being modeled in this analysis vary significantly across sources, as explained by the notes provided in the tables.

Table 3: Sales Area and Cooling Capacity of a Typical Supermarket

Source	Sales area (sq ft)	Cooling Capacity (BTU/hr)[a]			Cooling Capacity/ Sales Area
		Medium Temp (MT)	Low Temp (LT)	Total	
Armines (2009)	47,000	764,000	573,000	1,338,000[b]	28
HMG and CTG (2008)	40,000 – 60,000	901,000	300,000	1,201,000	24

[a] Rounded to the nearest thousand.

[b] Includes cooling capacity from condensing units and stand-alone equipment, which total 160,000 BTU/hr (47 kW).

Table 4: Relationship between Sales Area and Refrigerant Charge

Source	Charge/Sales Area (lb/sq ft)	Notes
Armines (2009)	0.074	Estimate for 2004. Noted that this ratio increased by 50% between 1960 and 1990, likely due to the changing trend in store size.
Sand et al. (1997)	0.08-0.12	Noted as a general rule of thumb.

Table 5: Relationship between Refrigerant Charge and Cooling Capacity

Source	System Type	Charge/Cooling Capacity (lb/BTU/hr)	
Armines (2009)	Centralized DX	1.81×10^{-3} (MT)	2.56×10^{-3} [a]
Armines (2009)	Centralized DX	3.55×10^{-3} (LT)	
Armines (2009)	Secondary Loop	0.52×10^{-3} (MT)	0.63×10^{-3} [a]
Armines (2009)	Secondary Loop	0.78×10^{-3} (LT)	
Baxter (2003)	Centralized DX	2.58×10^{-3} - 3.23×10^{-3}	
HMG and CTG (2008)	Centralized DX	2.58×10^{-3} - 3.23×10^{-3}	
Minea (2007)	Centralized DX	2.68×10^{-3}	
Minea (2007)	Secondary Loop	1.05×10^{-3}	

[a] Assumes that supermarkets contain 57% MT and 43% LT refrigeration, as detailed in Table 3.

Table 6: Charge Size and Leak Rate Estimates for Average-Sized[a] Supermarkets with Centralized DX Systems

Source	Charge (lbs)	Leak Rate	Notes
Armines (2009)	3,030	18-30%	Based on 2004 CA field survey. Does not include charge associated with condensing units and stand-alone equipment (~120 lbs). Leak rate uncertainties are high for centralized systems.
Baxter (2003)	3,000	10-30%	Charge size estimate for refrigerant load of 1,120,000 BTU/hr assuming 2.68×10^{3} lbs/BTU/hr
CARB (2009)	3,500 – 5,000	15-21%	Facility charge size is calculated based on assumptions on charge size per system and number of systems per store, based on SCAQMD Rule 1415 data.
Hill PHOENIX (2009)	2,000-3,000	20%	Estimate for new construction of a 45,000 ft^2 store.
HMG and CTG (2008)	2,800	15-30%	Charge is assumed to be the California average (based on CARB "Draft Concept Paper: Specifications for Commercial Refrigeration").[b] Source of leak rate estimate is not specified.
Hussmann (2009)	2,700-3,750	15%	Estimate for new construction of a 45,000 ft^2 store.
Kysor/Warren (2009)	2,500-3,000	25%	Estimate for new construction of a 45,000 ft^2 store.
Minea (2007)	2,200 – 5,500	15-30%	Source of charge size and leak rate estimates are unclear.
SCE & Foster-Miller (2004)	3,000 – 5,000	30-50%	Citation for leak rate estimate is Sand et al. (1997), which reports a historic average leak rate of 30% with an achievable leak rate of 10% through aggressive maintenance practices. Source of 50% leak rate is unclear. Source of charge size estimate is also unclear.
Verisae (2009)	2,500-3,000	20%	Estimate for new construction of a 45,000 ft^2 store

[a] An average-sized supermarket is assumed to be roughly 45,000-60,000 ft^2. Not all sources identified a corresponding store size in conjunction with charge size estimates.

[b] Report available at http://www.arb.ca.gov/cc/hgwpss/meetings/021508/RWC_Commercial_Refrig_Draft_Concept_Paper.pdf

Table 7: Equipment Manufacturer Estimates for Charge Size and Leak Rates for New 45,000 ft^2 Supermarkets with Distributed Systems

Source	Charge (lbs)	Leak Rate	Notes
Baxter (2003)	900-1,800	5%	Charge calculated by assuming charge is 30-60% of comparable DX system; dependent on the condenser type.
Hill PHOENIX (2009)	1,600	20%	Charge assumed to be 75% of comparable DX system
Hussmann (2009)	500-1,000	2-8%	Manufacturer specializes in and promotes this technology.
Kysor/Warren (2009)	1,500-1,800	10-15%	

Table 8: Charge Size and Leak Rate Estimates for Supermarkets with Secondary Loop Systems

Source	Charge (lbs)	Leak Rate	Notes
Armines (2009)	800	NA	Calculated based on average cooling capacity for supermarkets with an average sales area of 47,000 ft^2 and charge/cooling capacity ratio.
Baxter (2003)	150-450	2-10%	Charge calculated by assuming charge is 5-15% of comparable DX system; dependent on the condenser type.
Hill PHOENIX (2009)	1,200	5-10%	Estimate for new construction of a 45,000 ft^2 store. Manufacturer specializes in this technology.
Minea (2007)	1,000	5-10%	Based on a case study store with sales area of 74,842 ft^2
SCE & Foster-Miller (2004)	300-500	14.8%	Charge estimate based on" typical supermarket." Charge can be as high as 1,400 lbs if heat reclaim is used. Leak rate based on a case study.

Based on the information presented above, charge size and leak rate assumptions were developed for the baseline store types—i.e., small supermarkets,[8] large supermarkets,[9] and big box food stores.[10]

Methodology for Developing Charge Size Assumptions

While both refrigerant cooling capacity and store size (among other characteristics) impact charge size, cooling capacity was identified as a more significant variable in estimating charge. Some sources did identify ratios between charge size and store size, but such assumptions were deemed unreliable due to the changing trends in average store size and design/layout.[11] For example, Armines (2009) reported that the relationship between charge size and refrigerated sales area is constantly changing in California, having increased by 50% between 1960 and 1990.

[8] Defined as having a cooling capacity of 249,353 BTU/hr, a size of 10,000 square feet, and a cooling capacity/sales area ratio of 25.

[9] Defined as having a cooling capacity of 1,257,920 BTU/hr, a size of 60,000 square feet, and a cooling capacity/sales area ratio of 21.

[10] Defined as having a cooling capacity of 1,517,440 BTU/hr, a size of 150,000 square feet, and a cooling capacity/sales area ratio of 10.

[11] Calculated charge estimates based on refrigerant charge per sales area ratio were found to be excessively high. In contrast, literature and base case store data suggest that the correlation between cooling capacity and charge size is fairly strong.

As a result, cooling capacity was selected as the primary consideration in developing charge size assumptions.

10.1.1 DX Systems

Based on the ratios identified in Table 5, centralized DX systems were estimated to have a charge size ranging from 2.58 x 10^{-3} – 3.23 x 10^{-3} lbs/BTU/hr. Accordingly, an average ratio of 2.9 x 10^{-3} lbs/BTU/hr was used to estimate charge sizes for each baseline store, as shown in Table 9.

Table 9: Charge Size Estimates for Base Case Stores with a Centralized DX System

Store	lb
Small Supermarket	725
Large Supermarket	3,655
Big Box Food Store	4,410

To vet these estimates, the values in Table 9 were compared to the values listed in Table 6. Most literature indicates that charge sizes for large supermarkets fall between 3,000 – 5,000 pounds of refrigerant. This is consistent with the estimated charge sizes of 3,655 and 4,410 pounds used in large supermarkets and big box stores, respectively. Furthermore, all major U.S. equipment manufacturers consulted for this study, which are intimately familiar with the design of new supermarket refrigeration systems in California, estimated that 45,000 ft^2 stores with newly installed systems would have a charge of close to 3,000 pounds. Since the assumed store size of the base case large supermarket is 60,000 ft^2, it is reasonable that the estimated charge size for this base case design would be slightly higher than the estimates provided by industry contacts. In addition, the information cited in CARB (2009) is based on a robust dataset collected on refrigeration/AC equipment in California by the South Coast Air Quality Management District (SCAQMD) under Rule 1415 (Reduction of Refrigerant Emissions from Stationary Refrigeration and Air Conditioning Systems).[12] The report indicates that 90% of centralized systems in California fall in the medium category and contain an average charge size of 3,500 pounds per store. These estimates are in line with those calculated using the methodology described above.

10.1.2 Distributed and Secondary Loop Systems

For stores with distributed and secondary loop systems, ratios of 1.45 x 10^{-3} lbs/BTU/hr and 0.81 x 10^{-3} lbs/BTU/hr were used, respectively. The ratio for distributed systems was estimated based on the assumption that a distributed system has a charge size that ranges between 25-75% of the charge size of a corresponding centralized DX system (Hill PHOENIX 2009; Sand et al. 1997; IPCC/TEAP 2006; Baxter 2003). As a result, it was assumed for this analysis that a distributed system has a charge size that is 50% of the charge size of a corresponding centralized DX system. Secondary loop systems have a charge size 28% the charge size of a corresponding DX system; the ratio was identified based on Armines (2009) and Minea (2007).

[12] The Rule 1415 data used for the CARB report were available for six years (reporting years 2000 through 2005) and consisted of approximately 16,000 records. Data reported include equipment type, charge size, leak rate, store size, and energy consumption. No data on cooling capacity are reported.

Table 10: Charge Size (lbs) Estimates for Distributed and Secondary Loop Systems

Store	Distributed	Secondary Loop
Small Supermarket	360	200
Large Supermarket	1,830	1,015
Big Box Food Store	2,205	1,225

The calculated estimates shown in Table 10 were compared with estimates presented in Table 7 and Table 8 to confirm that they are reasonable assumptions.

10.1.3 Impact of the Condenser Type

Research indicates that air-cooled condensers are the most commonly used condensers in supermarket refrigeration systems. As a result, the estimates presented in the previous sections assume the use of an air-cooled condenser. However, the use of an evaporative-cooled condenser or a fluid-cooled condenser will impact the charge size of a system. Based on conversations with industry contacts (Kysor/Warren and Hussmann), as well as U.S. EPA (2010) and Baxter (2003), it is assumed that evaporative-cooled condenser require a greater charge, while fluid-cooled condensers require less charge. Specifically, evaporative-cooled condensers are assumed to have a charge size that is approximately 110% of that required for an air-cooled condenser, and fluid-cooled condensers are assumed to have a charge size that is about 60% of that required for an air-cooled condenser.

Methodology for Developing Leak Rate Assumptions

Leak rate estimates were determined based on information summarized in Table 6, Table 7, and Table 8. In particular, information cited by CARB (2009) was used as the main source for determining the leak rate of centralized DX systems, since the Rule 1415 dataset is the most robust leak rate information available at this time. System manufacturers and case studies were relied on as the main source for leak rate information associated with distributed and secondary loop systems, as these systems are less commonly used and still relatively new to the market. **Table 11** summarizes the leak rate assumptions derived from the sources reviewed.

Table 11: Assumptions on Leak Rates

Leak Rate (percent of charge per year)	Centralized DX	Distributed	Secondary Loop
Average	18%	15%	10%
Range (of averages)	15% - 25%	10% - 15%	5% - 15%

Although the leak rates in **Table 11** are assumed to represent current practices, the ARB Initial Statement of Reasons (ISOR) for Proposed Regulation for the Management of High Global Warming Potential Refrigerants for Stationary Sources states that existing facilities, which use "business as usual" equipment design and installation practices can be expected to lower the annual refrigerant leak rate from the current 18% - 20% for supermarkets (state average) to a 10% annual leak rate, based on more stringent inspection and maintenance practices (repair all leaks within 14 days and other practices). Since the refrigerant management regulations are now being implemented in California, the leak rates used in this analysis were scaled down to reflect the anticipated reduction in refrigerant leaks. Accordingly, Table 12 summarizes the final leak rate assumptions used in this analysis.

Table 12: Revised Leak Rate Assumptions

Leak Rate (percent of charge per year)	Centralized DX	Distributed	Secondary Loop
Average	12%	8%	5%
Range (of averages)	10% - 15%	5% - 10%	2% - 8%

Limitations and Considerations

The supermarket industry recognizes that refrigerant charge size varies significantly from manufacturer to manufacturer and store to store, and cannot be easily generalized based on one variable. Even manufacturers of the equipment cannot accurately predict the charge size of any given system and can only provide a best estimate based on the system characteristics and design. Given the complexity and uncertainty associated with estimating charge size, this methodology is intended only to provide indicative charge estimates that are reasonable for use in the study at hand.

Similarly, refrigerant leak rates vary significantly over time, and by store and system type. Generalizing an *average* leak rate of a system or store does not accurately represent an observed leak rate at a given point in time; however, observed and documented trends are useful for comparing technologies and estimating the impact of a system over its lifetime. The estimated average leak rates are believed to be reasonable for use in this analysis, and have been reviewed and accepted by leading industry stakeholders—including leading manufacturers and users of supermarket refrigeration systems.

It is important to note that the average CA store size and the average amount of cooling capacity per store in CA are constantly changing. Likewise, practices and standards associated with leak prevention and repair are not stagnant. However, the assumptions developed for this analysis are intended to be representative of the most recent documented trends in newly installed stores.

11. Appendix F: Wetbulb Sensitivity Study for Floating Head Pressure Measure

Wetbulb sensor robustness is a concern for ambient-following control for evaporative condensers. Wetbulb sensors (actually a combination of drybulb sensor and humidity sensor) generally lose calibration accuracy over time, which may lead to negative savings from ambient-following versus a fixed SCT setpoint control strategy. A supporting analysis was performed to evaluate the incremental savings from using a wetbulb-following control strategy at varying control TDs. The analysis assumes a minimum SCT of 70°F with variable speed condenser fan control. The Base Case for this analysis was a fixed SCT setpoint of 70°F with variable-speed condenser fan control. The large supermarket with central compressor configuration and evaporative condenser were used for this analysis.

The results of this analysis are presented in Figure 72:

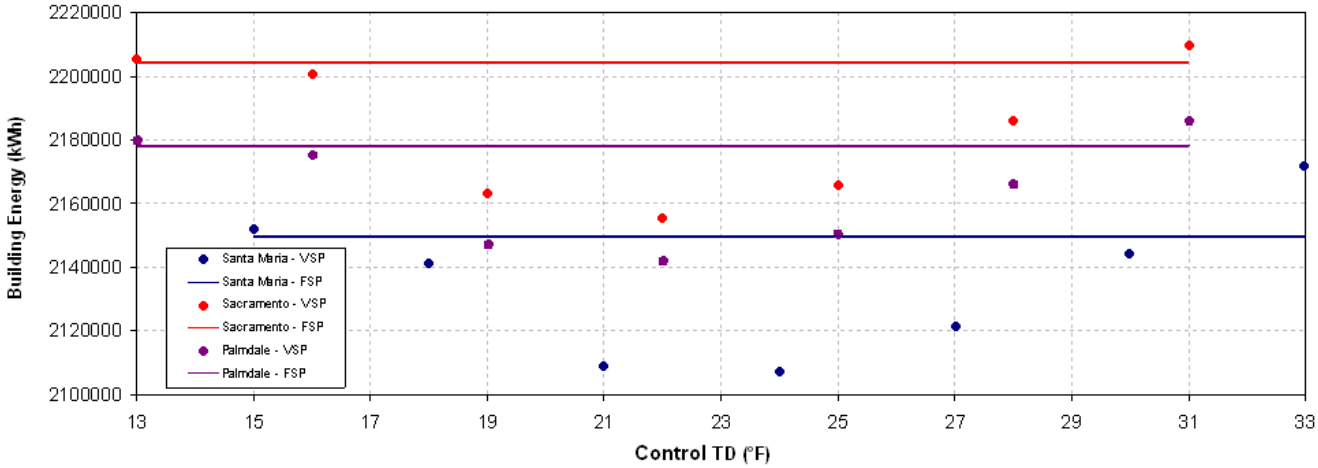

Figure 72: TD Sensitivity Analysis

Figure 72 shows that ambient-following control is still cost-effective, even if the sensor were to be out of calibration.

12. Appendix G: Databases from Savings By Design

Condenser Specific Efficiency

Figure 73 through Figure 74 show a database of condenser specific efficiencies utilized to calculate Base Case specific efficiency for the condenser efficiency measure. The condenser efficiencies come from new-construction projects that participated in the Savings By Design new construction incentive program. Both warehouses and supermarkets are included in the database; there is some equipment overlap between supermarkets and small refrigerated warehouses, and a concurrent Title 24 CASE study is striving to mandate condenser efficiencies. Both the supermarket and refrigerated warehouse efficiency mandates utilize the database depicted here.

Year	Utility	Project Type	Location	Configuration	Specific Efficiency (Btu/h/Watt)
2008	PG&E	Grocery	Orcutt	Air-Cooled	150
2008	PG&E	Grocery	Lompoc	Air-Cooled	150
2008	SCE	Grocery	Oxnard	Air-Cooled	150
2008	PG&E	Grocery	Santa Cruz	Air-Cooled	139
2007	SCE	Grocery	Marina Del Rey	Air-Cooled	139
2007	PG&E	Grocery	Novato	Air-Cooled	139
2007	PG&E	Grocery	Milpitas	Air-Cooled	134
2007	PG&E	Grocery	Novato	Air-Cooled	134
2007	SCE	Grocery	Marina Del Rey	Air-Cooled	130
2007	SCE	Grocery	La Verne	Air-Cooled	130
2007	PG&E	Grocery	San Jose	Air-Cooled	82
2007	PG&E	Grocery	Redwood City	Air-Cooled	82
2008	PG&E	Grocery	Santa Cruz	Air-Cooled	78
2008	PG&E	Grocery	Santa Cruz	Air-Cooled	78
2007	PG&E	Grocery	San Jose	Air-Cooled	77
2007	PG&E	Grocery	Redwood City	Air-Cooled	77
2008	PG&E	Grocery	Novato	Air-Cooled	77
2007	PG&E	Grocery	Antioch	Air-Cooled	77
2010	SDG&E	Warehouse	San Diego	Air-Cooled	76
2007	SCE	Grocery	Irvine	Air-Cooled	75
2008	SCE	Grocery	Lakewood	Air-Cooled	74
2008	SCE	Grocery	Hawthorne	Air-Cooled	74
2008	PG&E	Grocery	Pittsburg	Air-Cooled	74

2008	PG&E	Grocery	Pittsburg	Air-Cooled	74
2008	PG&E	Grocery	Pittsburg	Air-Cooled	74
2008	PG&E	Grocery	Pittsburg	Air-Cooled	74
2008	SCE	Grocery	Apple Valley	Air-Cooled	74
2008	SCE	Grocery	Apple Valley	Air-Cooled	74
2008	SCE	Grocery	Apple Valley	Air-Cooled	74
2008	SCE	Grocery	Apple Valley	Air-Cooled	74
2008	SCE	Grocery	Apple Valley	Air-Cooled	74
2008	PG&E	Grocery	Pittsburg	Air-Cooled	74
2007	SCE	Grocery	Irvine	Air-Cooled	71
2008	SCE	Grocery	Seal Beach	Air-Cooled	71
2008	SCE	Grocery	Tustin	Air-Cooled	71
2008	PG&E	Grocery	Santa Cruz	Air-Cooled	71
2007	SCE	Grocery	Claremont	Air-Cooled	62
2008	PG&E	Grocery	Santa Cruz	Air-Cooled	62
2008	PG&E	Grocery	Santa Cruz	Air-Cooled	62
2007	SCE	Grocery	Torrance	Air-Cooled	61
2008	PG&E	Grocery	Santa Cruz	Air-Cooled	60
2007	SCE	Grocery	Marina Del Rey	Air-Cooled	60
2007	SCE	Grocery	Marina Del Rey	Air-Cooled	60
2007	SCE	Grocery	La Verne	Air-Cooled	60
2007	PG&E	Grocery	Novato	Air-Cooled	60
2007	SCE	Grocery	La Verne	Air-Cooled	60
2008	PG&E	Grocery	Santa Cruz	Air-Cooled	57
2008	PG&E	Grocery	Santa Cruz	Air-Cooled	57
2007	SCE	Grocery	Norwalk	Air-Cooled	55
2008	PG&E	Grocery	Santa Cruz	Air-Cooled	54
2008	PG&E	Grocery	Santa Cruz	Air-Cooled	54
2007	SCE	Grocery	Norwalk	Air-Cooled	51
2010	SCE	Warehouse	Buena Park	Air-Cooled	49.6
2007	SCE	Grocery	Claremont	Air-Cooled	48
2008	SCE	Grocery	Long Beach	Air-Cooled	48
2008	PG&E	Grocery	Santa Cruz	Air-Cooled	48
2007	SCE	Grocery	Malibu	Air-Cooled	46
2008	SCE	Grocery	Rancho Temecula	Air-Cooled	46

2010	SCE	Warehouse	Buena Park	Air-Cooled	41.3
2007	SCE	Warehouse	Santa Barbara	Air-Cooled	41.1
2007	SCE	Grocery	Torrance	Air-Cooled	40
2007	SCE	Grocery	Malibu	Air-Cooled	40

Figure 73: Air-cooled axial-fan halocarbon condenser database

Year	Utility	Project Type	Location	Configuration	Specific Efficiency
2007	SCE	Grocery	South El Monte	Centrifugal-Fan Evap	278
2008	SCE	Grocery	Buena Park	Centrifugal-Fan Evap	261
2008	SCE	Grocery	Pomona	Centrifugal-Fan Evap	240
2007	PG&E	Warehouse	Petaluma	Centrifugal-Fan Evap	234
2007	SCE	Warehouse	Ontario	Centrifugal-Fan Evap	226
2007	PG&E	Grocery	Paso Robles	Centrifugal-Fan Evap	214
2008	SCE	Grocery	Chino	Centrifugal-Fan Evap	193
2010	PG&E	Warehouse	Gonzales	Centrifugal-Fan Evap	192
2010	PG&E	Warehouse	Gonzales	Centrifugal-Fan Evap	192
2008	SCE	Grocery	Corona	Centrifugal-Fan Evap	191
2008	SCE	Grocery	Moreno Valley Frederick	Centrifugal-Fan Evap	191
2008	SCE	Grocery	Moreno Valley Heacock	Centrifugal-Fan Evap	191
2008	SCE	Grocery	Palm Springs	Centrifugal-Fan Evap	191
2008	SCE	Grocery	Pedley	Centrifugal-Fan Evap	191
2008	PG&E	Grocery	Bakersfield-Brimhall	Centrifugal-Fan Evap	191
2008	PG&E	Grocery	Bakersfield-Hageman	Centrifugal-Fan Evap	191
2008	PG&E	Grocery	Bakersfield-Olive	Centrifugal-Fan Evap	191
2008	PG&E	Grocery	Bakersfield-Planz	Centrifugal-Fan Evap	191
2008	PG&E	Grocery	Bakersfield-Stine	Centrifugal-Fan Evap	191
2008	PG&E	Grocery	Bakersfield-Stockdale	Centrifugal-Fan Evap	191
2008	PG&E	Grocery	Fresno-Tulare	Centrifugal-Fan Evap	191
2008	PG&E	Grocery	Lemoore	Centrifugal-Fan Evap	191
2008	PG&E	Grocery	Wasco	Centrifugal-Fan Evap	191
2008	SCE	Grocery	Alhambra	Centrifugal-Fan Evap	191
2008	SCE	Grocery	Baldwin Park	Centrifugal-Fan Evap	191
2008	SCE	Grocery	Loma Linda	Centrifugal-Fan Evap	191
2008	SCE	Grocery	Ontario-Euclid	Centrifugal-Fan Evap	191

2007	SCE	Grocery	Upland	Centrifugal-Fan Evap	191
2008	SCE	Grocery	Temecula	Centrifugal-Fan Evap	191
2008	SCE	Grocery	West Covina	Centrifugal-Fan Evap	191
2008	SCE	Grocery	Chino Hills	Centrifugal-Fan Evap	191
2008	SCE	Grocery	Covina	Centrifugal-Fan Evap	191
2008	SCE	Grocery	Fontana	Centrifugal-Fan Evap	191
2008	SCE	Grocery	Fountain Valley Harbor	Centrifugal-Fan Evap	191
2008	PG&E	Grocery	Fresno-1st St	Centrifugal-Fan Evap	191
2008	PG&E	Grocery	Fresno-Cedar	Centrifugal-Fan Evap	191
2008	SCE	Grocery	Compton	Centrifugal-Fan Evap	191
2008	SCE	Grocery	Delano	Centrifugal-Fan Evap	191
2008	SCE	Grocery	Fountain Valley 1082	Centrifugal-Fan Evap	191
2008	SCE	Grocery	Glendora	Centrifugal-Fan Evap	191
2008	SCE	Grocery	Hesperia	Centrifugal-Fan Evap	191
2008	SCE	Grocery	Long Beach	Centrifugal-Fan Evap	191
2008	SCE	Grocery	Moreno Valley Perris	Centrifugal-Fan Evap	191
2008	SCE	Grocery	Newbury Park	Centrifugal-Fan Evap	191
2008	SCE	Grocery	Norwalk	Centrifugal-Fan Evap	191
2008	SCE	Grocery	Oak Park	Centrifugal-Fan Evap	191
2008	SCE	Grocery	Palmdale	Centrifugal-Fan Evap	191
2008	SCE	Grocery	Paramount	Centrifugal-Fan Evap	191
2008	SCE	Grocery	Pico Rivera	Centrifugal-Fan Evap	191
2008	SCE	Grocery	Rialto	Centrifugal-Fan Evap	191
2008	SCE	Grocery	San Jacinto	Centrifugal-Fan Evap	191
2008	SCE	Grocery	Simi Valley	Centrifugal-Fan Evap	191
2008	SCE	Grocery	Upland	Centrifugal-Fan Evap	191
2008	SCE	Grocery	Yucaipa	Centrifugal-Fan Evap	191
2007	SCE	Grocery	Arcadia	Centrifugal-Fan Evap	191
2007	SCE	Grocery	Buena Park	Centrifugal-Fan Evap	191
2007	SCE	Grocery	Eagle Rock	Centrifugal-Fan Evap	191
2007	SCE	Grocery	Hemet	Centrifugal-Fan Evap	191
2007	SCE	Grocery	Huntington Beach	Centrifugal-Fan Evap	191
2007	SCE	Grocery	La Mirada	Centrifugal-Fan Evap	191
2007	SCE	Grocery	Laguna Hills	Centrifugal-Fan Evap	191
2007	SCE	Grocery	West Covina	Centrifugal-Fan Evap	191
2007	SCE	Grocery	Moreno Valley	Centrifugal-Fan Evap	189

2008	SCE	Grocery	Victorville	Centrifugal-Fan Evap	188
2007	SCE	Grocery	Visalia	Centrifugal-Fan Evap	188
2007	SCE	Grocery	Irvine	Centrifugal-Fan Evap	187
2007	SCE	Grocery	Victorville	Centrifugal-Fan Evap	186
2007	SCE	Grocery	Moreno Valley	Centrifugal-Fan Evap	186
2007	SCE	Grocery	Lake Forest	Centrifugal-Fan Evap	186
2008	SCE	Grocery	Anaheim Hills	Centrifugal-Fan Evap	175
2008	SCE	Grocery	Lakewood	Centrifugal-Fan Evap	175
2008	SCE	Grocery	City of Industry	Centrifugal-Fan Evap	175
2008	SCE	Grocery	La Habra	Centrifugal-Fan Evap	175
2008	SCE	Grocery	Moorpark	Centrifugal-Fan Evap	175
2008	SCE	Grocery	Moreno Valley Alessandro	Centrifugal-Fan Evap	175
2007	PG&E	Warehouse	Chico	Centrifugal-Fan Evap	175
2008	PG&E	Grocery	Manteca	Centrifugal-Fan Evap	173
2007	PG&E	Grocery	Woodland	Centrifugal-Fan Evap	173
2008	PG&E	Grocery	Madera	Centrifugal-Fan Evap	173
2008	SCE	Grocery	Duarte	Centrifugal-Fan Evap	172
2008	SCE	Grocery	Manhattan Beach	Centrifugal-Fan Evap	172
2008	SCE	Grocery	Palm Desert	Centrifugal-Fan Evap	172
2007	PG&E	Grocery	Martell	Centrifugal-Fan Evap	170
2007	PG&E	Grocery	Fresno	Centrifugal-Fan Evap	168
2007	PG&E	Grocery	San Francisco	Centrifugal-Fan Evap	168
2007	SCE	Grocery	Oxnard	Centrifugal-Fan Evap	155
2008	SCE	Grocery	Victorville	Centrifugal-Fan Evap	155

Figure 74: Centrifugal fan evaporative-cooled halocarbon condenser database

13. Appendix H: Energy Analysis for CO_2 Secondary Systems

Appendix H describes the energy impact analysis performed for the CO_2 secondary (indirect) cooling measure. Indirect (pump-recirculated) systems were evaluated for both small and large supermarkets, consistent with stakeholder comments about the predominance of this configuration versus cascade cooling systems. The indirect system configuration for both the small and large supermarket prototypes consist of phase-change CO_2 pump-recirculated loops serving both the low- and medium-temperature loads—both served by dedicated LT and MT R-404A suction groups, respectively. The baselines of comparison are central rack systems with air-cooled condensers. The Baselines include floating head pressure to 70°F SCT with ambient-following control logic and variable-speed condenser fans, as well as floating suction pressure control. Figure 75 shows the general system configuration:

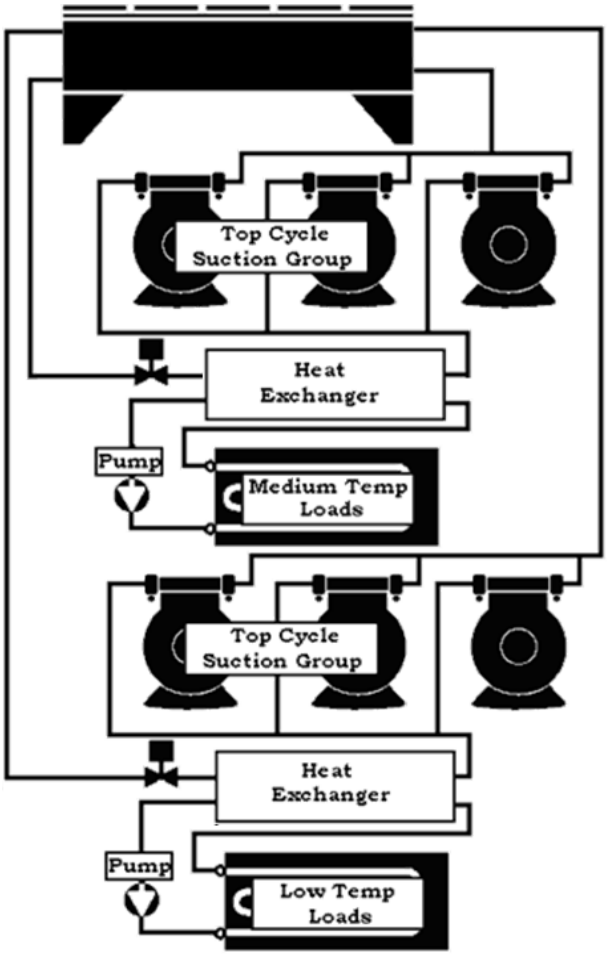

Figure 75: Indirect system diagram

The analysis took into account the lower return gas temperature at the compressors (increased pumping efficiency) and the circulation loop heat gains, which constitute a pure heat load on the system in contrast to suction line heat gain on direct expansion (DX) systems, which only act to increase superheat and decrease pumping efficiency. Operating suction temperatures for the CO_2 indirect system were assumed to be similar to the baseline design, with a slight increase for

CO_2—consistent with stakeholder feedback that the comparatively better refrigeration efficiency of CO_2 outweighs the penalty of requiring a TD in the CO_2/refrigerant heat exchanger. Figure 76 shows the analysis assumptions for this measure.

	Large Supermarket	**Small Supermarket**
Design climate	CTZ12 – Sacramento Executive	CTZ12 – Sacramento Executive
Design temperatures	LT System: -20°F SST, 117°F SCT MT System: 18°F SST, 122°F SCT	LT System: -25°F SST, 117°F SCT MT System: 21°F SST, 122°F SCT
Condenser	Air-cooled	Air-cooled
Condenser design TD	LT: 10°F MT: 15°F	LT: 10°F MT: 15°F
Condenser specific efficiency	50 (Btu/h)/W	50 (Btu/h)/W
Condenser capacity at design conditions	LT: 673 MBH MT: 1,710 MBH	LT: 92 MBH MT: 354 MBH
Condenser control	Floating head pressure, drybulb-following control logic with variable-speed fans	Floating head pressure, drybulb-following control logic with variable-speed fans
Minimum condensing temperature	70°F	70°F
Compressors	(3) uneven reciprocating semi-hermetic compressors per suction group Performance at design conditions: MT Compressor 1: 4,493 lb/hr, 27.2 kW MT Compressor 2: 10,483 lb/hr, 63.5 kW MT Compressor 3: 14,976 lb/hr, 90.6 kW LT Compressor 1: 1,422 lb/hr, 14.7 kW LT Compressor 2: 3,318 lb/hr, 34.4 kW LT Compressor 3: 4,740 lb/hr, 49.2 kW	(3) uneven reciprocating semi-hermetic compressors per suction group Performance at design conditions: MT Compressor 1: 1,364 lb/hr, 7.6 kW MT Compressor 2: 3,183 lb/hr, 17.6 kW MT Compressor 3: 4,546 lb/hr, 25.2 kW LT Compressor 1: 402 lb/hr, 4.5 kW LT Compressor 2: 939 lb/hr, 10.4 kW LT Compressor 3: 1,341 lb/hr, 14.8 kW
Compressor control	Electronic sequencing with floating suction pressure	Electronic sequencing with floating suction pressure
Assumed compressor return gas temperature	LT: -5°F MT: 28°F	LT: -5°F MT: 28°F
Pump power	LT: 1.0 HP MT: 4.0 HP	LT: 0.33 HP MT: 1.25 HP
Assumed piping heat gain	LT: 40.0 MBH MT: 22.8 MBH	LT: 11.1 MBH MT: 7.4 MBH

Figure 76: Analysis assumptions for CO_2 indirect system analysis

Figure 77 below shows the analysis results for this measure.

	Baseline Energy Usage (kWh)		Proposed Energy Usage (kWh)		Difference (kWh)	
	LT	MT	LT	MT	LT	MT
Large Supermarket						
Compressors	247,579	421,483	239,471	411,448	-8,108	-10,035
Condenser	11,846	32,841	11,784	32,643	-62	-198
Pumps	0		36,266		36,266	
Total (Whole Building)	2,221,967		2,203,564		-18,403	
Small Supermarket						
Compressors	70,304	88,164	83,124	87,973	12,820	-191
Condenser	3,187	7,122	3,955	7,680	768	558
Pumps	0		11,472		11,472	
Total (Whole Building)	626,019		654,898		28,879	

Figure 77: Energy analysis results for CO_2 indirect system measure

The overall difference in energy consumption ranges from approximately -1% to +5%. As stated before, the analysis includes assumptions for SST impact, compressor return gas temperature changes, and piping heat gain, all of which can vary widely from store to store. Due to these considerations, the energy impact for indirect systems is assumed to be negligible.

Glycol Indirect System Analysis

Glycol was evaluated as a secondary cooling fluid for medium-temperature loads as part of the indirect system measure, after stakeholders indicated that they would prefer that the code included an optional alternative to CO_2. Preliminary analysis showed that glycol systems were not a cost-effective alternative to direct expansion systems or CO_2 indirect systems, because the cost of installation for a glycol system combined with the net increase in energy consumption outweighed the monetized savings from reduced refrigerant charge and leak rates. Analysis was performed to determine if the energy increase from glycol could be offset with variable-speed control of the glycol circulation pump and walk-in unit cooler fans. Analysis was performed using the large supermarket prototype with air-cooled condensers (MAC).

Figure 78 below shows the assumptions to evaluate this configuration.

Glycol Pump	15 HP pump, assumed 91.7% efficient motor (NEMA Premium)
Design Flow/Head	Design flow assumed to be 400 GPM at 80 ft. head pressure
Pump Control	Variable-speed pump control, based on maintaining constant differential pressure (pressure assumed to be measured at the loads, not at the pump)
Control Valves	Glycol control valves at the loads (walk-in coolers and display case line-ups) are assumed to be 2-way (on/off style), not 3-way (bypass-style) to facilitate pump speed control based on differential pressure
MT System Design SST	15°F SST

Compressor Performance at Design Conditions	Compressor 1: 5,150 lb/hr, 36.8 kW Compressor 2: 12,020 lb/hr, 85.9 kW Compressor 3: 17,180 lb/hr, 122.7 kW
Assumed Compressor Return Gas Temperature	22°F
Assumed Piping Heat Gain	29.3 MBH (3% of MT system design load, based on analysis of typical glycol pipe sizes and run lengths for large supermarket)
Unit Cooler Fan Power	Calculated for each walk-in based on a unit cooler efficiency of 47 Btuh/Watt at a TD of 10°F between entering glycol temperature and entering air temperature (compared to 97 Btuh/Watt at 10°F between evaporating temperature and entering air temperature for DX evaporator coils). Glycol is less efficient as a heat transfer fluid than refrigerant, and glycol cooling coils must be larger, with more fan power, than their DX evaporator counterparts for the same installed cooling capacity.
Unit Cooler Fan Control	Variable speed fan control based on space temperature. Assumed a minimum fan speed of 70%

Figure 78: Glycol indirect loop assumptions

Simulating the glycol pump required an assumption for required flow rate over the course of one year. Figure 79 below shows the assumed yearly required glycol flow rate. The profile is based on the simulated medium-temperature suction group load.

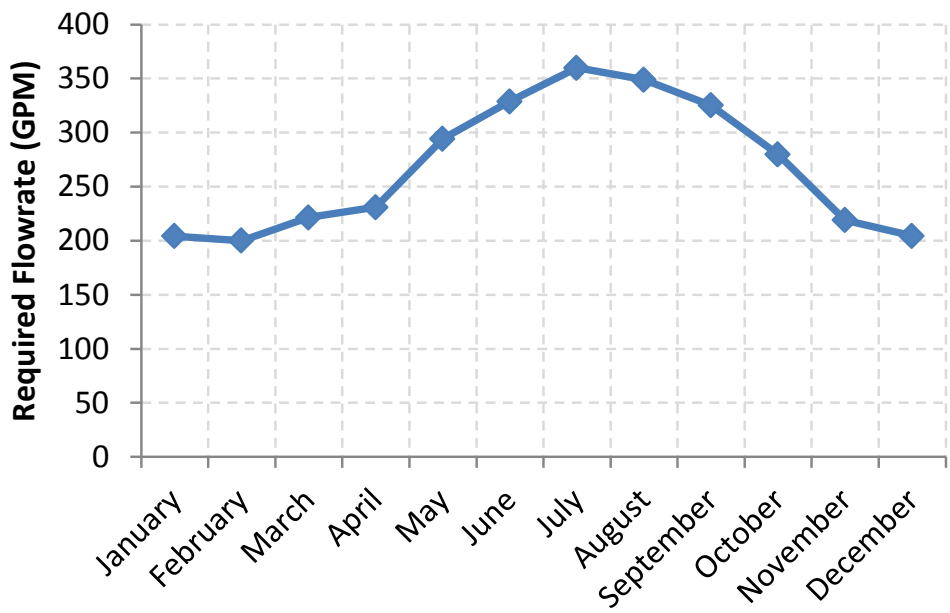

Figure 79: Assumed required glycol flowrate for MT indirect system

Figure 80 below shows the energy analysis results for this measure.

Climate Zone	Energy Savings (kWh)	Energy Savings/ SF (kWh)	Demand Savings (kW)	Demand Savings/ SF (Watts)
CTZ01 - Arcata	-55,039	-0.92	-2.9	-0.05
CTZ03 - Oakland	-53,062	-0.89	-7.3	-0.12
CTZ05 - Santa Maria	-53,437	-0.90	-5.2	-0.09
CTZ07 - San Diego-Lindbergh	-48,459	-0.81	-6.3	-0.11
CTZ08 - Fullerton	-70,805	-1.19	-14.8	-0.25
CTZ10 - Riverside	-73,947	-1.24	-11.2	-0.19
CTZ12 - Sacramento	-72,570	-1.22	-16.5	-0.28
CTZ13 - Fresno	-76,085	-1.28	-12.4	-0.21
CTZ14 - Palmdale	-77,063	-1.29	-17.0	-0.29
CTZ15 - Palm Springs	-86,779	-1.46	-12.3	-0.21

Figure 80: Energy analysis results for glycol indirect system measure

Full analysis results, including economic analysis with monetized costs for refrigerant charge reduction and leak rates, are presented in Section 4.

14. Appendix I: Full Cost Results

Floating Head Pressure

CTZ01 Arcata - Floating Head Pressure									
	Energy Savings (kWh)	Energy Savings/ SF (kWh)	TDV Cost Savings ($)	TDV Cost Savings /SF ($)	Measure Cost ($)	Refrigerant Cost Savings Range ($)		Net Savings Range ($)	
SAC	39,781	2.51	$ 75,523	$ 4.77	$ 15,248	-$3,738	-$5,607	$56,537	$54,668
SAD	42,136	2.66	$ 80,551	$ 5.08	$ 15,248	-$934	-$1,869	$64,369	$63,434
SEC	15,661	0.99	$ 26,299	$ 1.66	$ 13,040	$0	$0	$13,259	$13,259
SFC	22,345	1.41	$ 37,646	$ 2.38	$ 13,040	$0	$0	$24,606	$24,606
SFD	26,678	1.68	$ 44,854	$ 2.83	$ 13,040	$0	$0	$31,814	$31,814
MAC	151,127	2.54	$ 283,312	$ 4.76	$ 39,433	-$18,802	-$28,202	$225,078	$215,677
MAD	160,345	2.69	$ 302,224	$ 5.07	$ 39,433	-$4,285	-$9,401	$258,506	$253,390
MEC	49,416	0.83	$ 87,626	$ 1.47	$ 32,463	$0	$0	$55,163	$55,163
MFC	72,745	1.22	$ 124,373	$ 2.09	$ 32,463	$0	$0	$91,910	$91,910
MFD	90,908	1.53	$ 153,964	$ 2.59	$ 32,463	$0	$0	$121,501	$121,501
LAC	183,796	1.13	$ 350,950	$ 2.16	$ 44,484	-$22,974	-$34,461	$283,492	$272,005
LAD	170,940	1.05	$ 330,374	$ 2.04	$ 44,484	-$5,744	-$11,487	$280,146	$274,403
LEC	101,828	0.63	$ 173,642	$ 1.07	$ 36,071	$0	$0	$137,571	$137,571
LFC	117,735	0.73	$ 193,052	$ 1.19	$ 36,071	$0	$0	$156,981	$156,981
LFD	132,623	0.82	$ 217,526	$ 1.34	$ 36,071	$0	$0	$181,455	$181,455
SXX Average	29,320	1.85	$ 52,974	$ 3.34	$ 13,923				
MXX Average	104,908	1.76	$ 190,300	$ 3.20	$ 35,251				
LXX Average	141,384	0.87	$ 253,109	$ 1.56	$ 39,436				
XAX Average	124,688	2.10	$ 237,156	$ 3.98	$ 33,055				
XEX Average	55,635	0.82	$ 95,855	$ 1.40	$ 27,191				
XFX Average	77,172	1.23	$ 128,569	$ 2.07	$ 27,191				
ALL Average	91,871	1.49	$ 165,461	$ 2.70	$ 29,537				

CTZ03 Oakland - Floating Head Pressure									
	Energy Savings (kWh)	Energy Savings/ SF (kWh)	TDV Cost Savings ($)	TDV Cost Savings /SF ($)	Measure Cost ($)	Refrigerant Cost Savings Range ($)		Net Savings Range ($)	
SAC	40,637	2.56	$ 78,193	$ 4.93	$ 15,248	-$3,738	-$5,607	$59,207	$57,338
SAD	43,911	2.77	$ 84,218	$ 5.31	$ 15,248	-$934	-$1,869	$68,035	$67,101
SEC	12,751	0.80	$ 23,940	$ 1.51	$ 13,040	$0	$0	$10,900	$10,900
SFC	15,780	1.00	$ 25,595	$ 1.61	$ 13,040	$0	$0	$12,555	$12,555
SFD	18,644	1.18	$ 29,618	$ 1.87	$ 13,040	$0	$0	$16,578	$16,578
MAC	150,533	2.53	$ 279,833	$ 4.70	$ 39,433	-$18,802	-$28,202	$221,598	$212,197
MAD	161,340	2.71	$ 298,664	$ 5.01	$ 39,433	-$4,285	-$9,401	$254,946	$249,831
MEC	42,004	0.71	$ 84,360	$ 1.42	$ 32,463	$0	$0	$51,897	$51,897
MFC	54,231	0.91	$ 90,973	$ 1.53	$ 32,463	$0	$0	$58,510	$58,510
MFD	65,078	1.09	$ 104,838	$ 1.76	$ 32,463	$0	$0	$72,375	$72,375
LAC	188,761	1.16	$ 369,888	$ 2.28	$ 44,484	-$22,974	-$34,461	$302,430	$290,943
LAD	180,791	1.12	$ 355,329	$ 2.19	$ 44,484	-$5,744	-$11,487	$305,101	$299,358
LEC	84,424	0.52	$ 146,017	$ 0.90	$ 36,071	$0	$0	$109,946	$109,946
LFC	79,441	0.49	$ 121,748	$ 0.75	$ 36,071	$0	$0	$85,677	$85,677
LFD	89,767	0.55	$ 134,892	$ 0.83	$ 36,071	$0	$0	$98,821	$98,821
SXX Average	26,345	1.66	$ 48,313	$ 3.05	$ 13,923				
MXX Average	94,637	1.59	$ 171,734	$ 2.88	$ 35,251				
LXX Average	124,637	0.77	$ 225,575	$ 1.39	$ 39,436				
XAX Average	127,662	2.14	$ 244,354	$ 4.07	$ 33,055				
XEX Average	46,393	0.68	$ 84,772	$ 1.28	$ 27,191				
XFX Average	53,824	0.87	$ 84,611	$ 1.39	$ 27,191				
ALL Average	81,873	1.34	$ 148,540	$ 2.44	$ 29,537				

CTZ05 Santa Maria - Floating Head Pressure									
	Energy Savings (kWh)	Energy Savings/ SF (kWh)	TDV Cost Savings ($)	TDV Cost Savings /SF ($)	Measure Cost ($)	Refrigerant Cost Savings Range ($)		Net Savings Range ($)	
SAC	40,394	2.55	$ 78,976	$ 4.98	$ 15,248	-$3,738	-$5,607	$59,990	$58,121
SAD	43,382	2.74	$ 85,054	$ 5.37	$ 15,248	-$934	-$1,869	$68,872	$67,937
SEC	13,577	0.86	$ 24,341	$ 1.54	$ 13,040	$0	$0	$11,301	$11,301
SFC	17,854	1.13	$ 28,790	$ 1.82	$ 13,040	$0	$0	$15,750	$15,750
SFD	21,088	1.33	$ 33,489	$ 2.11	$ 13,040	$0	$0	$20,449	$20,449
MAC	149,843	2.52	$ 283,846	$ 4.77	$ 39,433	-$18,802	-$28,202	$225,612	$216,211
MAD	159,853	2.68	$ 302,082	$ 5.07	$ 39,433	-$4,285	-$9,401	$258,364	$253,248
MEC	45,094	0.76	$ 86,772	$ 1.46	$ 32,463	$0	$0	$54,309	$54,309
MFC	60,606	1.02	$ 101,145	$ 1.70	$ 32,463	$0	$0	$68,682	$68,682
MFD	73,413	1.23	$ 118,446	$ 1.99	$ 32,463	$0	$0	$85,983	$85,983
LAC	186,891	1.15	$ 369,274	$ 2.28	$ 44,484	-$22,974	-$34,461	$301,816	$290,329
LAD	177,073	1.09	$ 352,409	$ 2.17	$ 44,484	-$5,744	-$11,487	$302,182	$296,438
LEC	87,840	0.54	$ 148,206	$ 0.91	$ 36,071	$0	$0	$112,135	$112,135
LFC	90,733	0.56	$ 140,036	$ 0.86	$ 36,071	$0	$0	$103,965	$103,965
LFD	101,991	0.63	$ 155,646	$ 0.96	$ 36,071	$0	$0	$119,575	$119,575
SXX Average	27,259	1.72	$ 50,130	$ 3.16	$ 13,923				
MXX Average	97,762	1.64	$ 178,458	$ 3.00	$ 35,251				
LXX Average	128,906	0.80	$ 233,115	$ 1.44	$ 39,436				
XAX Average	126,239	2.12	$ 245,274	$ 4.11	$ 33,055				
XEX Average	48,837	0.72	$ 86,440	$ 1.30	$ 27,191				
XFX Average	60,948	0.98	$ 96,259	$ 1.57	$ 27,191				

ALL Average	84,642	1.39	$ 153,901	$ 2.53	$ 29,537				

CTZ07 San Diego-Lindbergh - Floating Head Pressure

	Energy Savings (kWh)	Energy Savings/ SF (kWh)	TDV Cost Savings ($)	TDV Cost Savings /SF ($)	Measure Cost ($)	Refrigerant Cost Savings Range ($)		Net Savings Range ($)	
SAC	41,339	2.61	$ 81,521	$ 5.14	$ 15,248	-$3,738	-$5,607	$62,535	$60,667
SAD	45,200	2.85	$ 88,454	$ 5.58	$ 15,248	-$934	-$1,869	$72,271	$71,337
SEC	11,692	0.74	$ 24,732	$ 1.56	$ 13,040	$0	$0	$11,692	$11,692
SFC	8,302	0.52	$ 14,257	$ 0.90	$ 13,040	$0	$0	$1,217	$1,217
SFD	8,739	0.55	$ 14,266	$ 0.90	$ 13,040	$0	$0	$1,226	$1,226
MAC	146,560	2.46	$ 279,379	$ 4.69	$ 39,433	-$18,802	-$28,202	$221,144	$211,743
MAD	158,757	2.67	$ 300,079	$ 5.04	$ 39,433	-$4,285	-$9,401	$256,361	$251,246
MEC	43,208	0.73	$ 88,347	$ 1.48	$ 32,463	$0	$0	$55,884	$55,884
MFC	33,276	0.56	$ 56,362	$ 0.95	$ 32,463	$0	$0	$23,899	$23,899
MFD	33,911	0.57	$ 55,837	$ 0.94	$ 32,463	$0	$0	$23,374	$23,374
LAC	189,170	1.17	$ 378,441	$ 2.33	$ 44,484	-$22,974	-$34,461	$310,983	$299,496
LAD	186,284	1.15	$ 369,719	$ 2.28	$ 44,484	-$5,744	-$11,487	$319,492	$313,748
LEC	62,714	0.39	$ 123,474	$ 0.76	$ 36,071	$0	$0	$87,403	$87,403
LFC	29,578	0.18	$ 46,759	$ 0.29	$ 36,071	$0	$0	$10,688	$10,688
LFD	30,742	0.19	$ 43,306	$ 0.27	$ 36,071	$0	$0	$7,235	$7,235
SXX Average	23,054	1.45	$ 44,646	$ 2.82	$ 13,923				
MXX Average	83,142	1.40	$ 156,001	$ 2.62	$ 35,251				
LXX Average	99,698	0.61	$ 192,340	$ 1.19	$ 39,436				
XAX Average	127,885	2.15	$ 249,599	$ 4.18	$ 33,055				
XEX Average	39,205	0.62	$ 78,851	$ 1.27	$ 27,191				
XFX Average	24,091	0.43	$ 38,464	$ 0.71	$ 27,191				
ALL Average	68,631	1.16	$ 130,996	$ 2.21	$ 29,537				

CTZ08 Fullerton - Floating Head Pressure

	Energy Savings (kWh)	Energy Savings/ SF (kWh)	TDV Cost Savings ($)	TDV Cost Savings /SF ($)	Measure Cost ($)	Refrigerant Cost Savings Range ($)		Net Savings Range ($)	
SAC	38,527	2.43	$ 140,286	$ 8.85	$ 15,248	-$3,738	-$5,607	$121,300	$119,431
SAD	46,054	2.91	$ 158,156	$ 9.98	$ 15,248	-$934	-$1,869	$141,974	$141,039
SEC	6,039	0.38	$ 74,214	$ 4.68	$ 13,040	$0	$0	$61,174	$61,174
SFC	16,053	1.01	$ 26,503	$ 1.67	$ 13,040	$0	$0	$13,463	$13,463
SFD	18,268	1.15	$ 29,494	$ 1.86	$ 13,040	$0	$0	$16,454	$16,454
MAC	155,455	2.61	$ 271,600	$ 4.56	$ 39,433	-$18,802	-$28,202	$213,366	$203,965
MAD	169,481	2.85	$ 301,138	$ 5.06	$ 39,433	-$4,285	-$9,401	$257,420	$252,305
MEC	50,026	0.84	$ 100,086	$ 1.68	$ 32,463	$0	$0	$67,623	$67,623
MFC	40,973	0.69	$ 66,756	$ 1.12	$ 32,463	$0	$0	$34,293	$34,293
MFD	44,953	0.75	$ 72,443	$ 1.22	$ 32,463	$0	$0	$39,980	$39,980
LAC	191,996	1.18	$ 357,687	$ 2.21	$ 44,484	-$22,974	-$34,461	$290,229	$278,742
LAD	204,068	1.26	$ 392,707	$ 2.42	$ 44,484	-$5,744	-$11,487	$342,480	$336,736
LEC	72,521	0.45	$ 139,627	$ 0.86	$ 36,071	$0	$0	$103,556	$103,556
LFC	39,502	0.24	$ 61,915	$ 0.38	$ 36,071	$0	$0	$25,844	$25,844
LFD	42,232	0.26	$ 61,986	$ 0.38	$ 36,071	$0	$0	$25,915	$25,915
SXX Average	24,988	1.58	$ 85,731	$ 5.41	$ 13,923				
MXX Average	92,178	1.55	$ 162,405	$ 2.73	$ 35,251				
LXX Average	110,064	0.68	$ 202,785	$ 1.25	$ 39,436				
XAX Average	134,264	2.21	$ 270,262	$ 5.51	$ 33,055				
XEX Average	42,862	0.56	$ 104,642	$ 2.41	$ 27,191				
XFX Average	33,664	0.69	$ 53,183	$ 1.11	$ 27,191				
ALL Average	75,743	1.27	$ 150,307	$ 3.13	$ 29,537				

CTZ10 Riverside - Floating Head Pressure

	Energy Savings (kWh)	Energy Savings/ SF (kWh)	TDV Cost Savings ($)	TDV Cost Savings /SF ($)	Measure Cost ($)	Refrigerant Cost Savings Range ($)		Net Savings Range ($)	
SAC	39,532	2.49	$ 63,926	$ 4.03	$ 15,248	-$3,738	-$5,607	$44,941	$43,072
SAD	44,875	2.83	$ 72,728	$ 4.59	$ 15,248	-$934	-$1,869	$56,546	$55,611
SEC	14,918	0.94	$ 30,223	$ 1.91	$ 13,040	$0	$0	$17,183	$17,183
SFC	13,572	0.86	$ 21,991	$ 1.39	$ 13,040	$0	$0	$8,951	$8,951
SFD	15,008	0.95	$ 23,584	$ 1.49	$ 13,040	$0	$0	$10,544	$10,544
MAC	144,706	2.43	$ 230,795	$ 3.88	$ 39,433	-$18,802	-$28,202	$172,561	$163,160
MAD	158,128	2.66	$ 253,561	$ 4.26	$ 39,433	-$4,285	-$9,401	$209,843	$204,727
MEC	54,139	0.91	$ 107,615	$ 1.81	$ 32,463	$0	$0	$75,152	$75,152
MFC	52,888	0.89	$ 83,532	$ 1.40	$ 32,463	$0	$0	$51,069	$51,069
MFD	60,377	1.01	$ 94,363	$ 1.58	$ 32,463	$0	$0	$61,900	$61,900
LAC	183,117	1.13	$ 298,940	$ 1.84	$ 44,484	-$22,974	-$34,461	$231,482	$219,995
LAD	195,975	1.21	$ 325,799	$ 2.01	$ 44,484	-$5,744	-$11,487	$275,572	$269,828
LEC	83,758	0.52	$ 161,102	$ 0.99	$ 36,071	$0	$0	$125,031	$125,031
LFC	64,454	0.40	$ 102,791	$ 0.63	$ 36,071	$0	$0	$66,720	$66,720
LFD	69,876	0.43	$ 107,063	$ 0.66	$ 36,071	$0	$0	$70,992	$70,992
SXX Average	25,581	1.61	$ 42,491	$ 2.68	$ 13,923				
MXX Average	94,048	1.58	$ 153,973	$ 2.59	$ 35,251				
LXX Average	119,436	0.74	$ 199,139	$ 1.23	$ 39,436				
XAX Average	127,722	2.12	$ 207,625	$ 3.43	$ 33,055				
XEX Average	50,938	0.79	$ 99,647	$ 1.57	$ 27,191				
XFX Average	46,029	0.76	$ 72,221	$ 1.19	$ 27,191				
ALL Average	79,688	1.31	$ 131,868	$ 2.16	$ 29,537				

CTZ12 Sacramento - Floating Head Pressure									
	Energy Savings (kWh)	Energy Savings/ SF (kWh)	TDV Cost Savings ($)	TDV Cost Savings /SF ($)	Measure Cost ($)	Refrigerant Cost Savings Range ($)		Net Savings Range ($)	
SAC	39,315	2.48	$ 64,514	$ 4.07	$ 15,248	-$3,738	-$5,607	$45,528	$43,659
SAD	44,092	2.78	$ 72,657	$ 4.58	$ 15,248	-$934	-$1,869	$56,475	$55,540
SEC	15,774	1.00	$ 31,665	$ 2.00	$ 13,040	$0	$0	$18,625	$18,625
SFC	16,053	1.01	$ 26,503	$ 1.67	$ 13,040	$0	$0	$13,463	$13,463
SFD	18,268	1.15	$ 29,494	$ 1.86	$ 13,040	$0	$0	$16,454	$16,454
MAC	146,124	2.45	$ 237,461	$ 3.99	$ 39,433	-$18,802	-$28,202	$179,227	$169,826
MAD	158,145	2.66	$ 258,073	$ 4.33	$ 39,433	-$4,285	-$9,401	$214,355	$209,239
MEC	54,644	0.92	$ 110,454	$ 1.85	$ 32,463	$0	$0	$77,991	$77,991
MFC	59,837	1.00	$ 97,327	$ 1.63	$ 32,463	$0	$0	$64,864	$64,864
MFD	70,005	1.18	$ 112,421	$ 1.89	$ 32,463	$0	$0	$79,958	$79,958
LAC	183,217	1.13	$ 303,354	$ 1.87	$ 44,484	-$22,974	-$34,461	$235,896	$224,409
LAD	190,289	1.17	$ 319,819	$ 1.97	$ 44,484	-$5,744	-$11,487	$269,591	$263,848
LEC	91,373	0.56	$ 173,748	$ 1.07	$ 36,071	$0	$0	$137,677	$137,677
LFC	79,733	0.49	$ 126,963	$ 0.78	$ 36,071	$0	$0	$90,892	$90,892
LFD	87,509	0.54	$ 134,910	$ 0.83	$ 36,071	$0	$0	$98,839	$98,839
SXX Average	26,700	1.68	$ 44,967	$ 2.84	$ 13,923				
MXX Average	97,751	1.64	$ 163,147	$ 2.74	$ 35,251				
LXX Average	126,424	0.78	$ 211,759	$ 1.31	$ 39,436				
XAX Average	126,864	2.11	$ 209,313	$ 3.47	$ 33,055				
XEX Average	53,930	0.83	$ 105,289	$ 1.64	$ 27,191				
XFX Average	55,234	0.90	$ 87,936	$ 1.45	$ 27,191				
ALL Average	83,625	1.37	$ 139,958	$ 2.29	$ 29,537				

CTZ13 Fresno - Floating Head Pressure									
	Energy Savings (kWh)	Energy Savings/ SF (kWh)	TDV Cost Savings ($)	TDV Cost Savings /SF ($)	Measure Cost ($)	Refrigerant Cost Savings Range ($)		Net Savings Range ($)	
SAC	38,192	2.41	$ 61,452	$ 3.88	$ 15,248	-$3,738	-$5,607	$42,467	$40,598
SAD	43,127	2.72	$ 69,391	$ 4.38	$ 15,248	-$934	-$1,869	$53,208	$52,274
SEC	15,979	1.01	$ 32,439	$ 2.05	$ 13,040	$0	$0	$19,399	$19,399
SFC	14,963	0.94	$ 25,159	$ 1.59	$ 13,040	$0	$0	$12,119	$12,119
SFD	16,630	1.05	$ 27,358	$ 1.73	$ 13,040	$0	$0	$14,318	$14,318
MAC	139,461	2.34	$ 223,418	$ 3.75	$ 39,433	-$18,802	-$28,202	$165,183	$155,782
MAD	151,764	2.55	$ 243,335	$ 4.09	$ 39,433	-$4,285	-$9,401	$199,617	$194,501
MEC	58,396	0.98	$ 115,482	$ 1.94	$ 32,463	$0	$0	$83,019	$83,019
MFC	56,223	0.94	$ 91,151	$ 1.53	$ 32,463	$0	$0	$58,688	$58,688
MFD	64,878	1.09	$ 104,696	$ 1.76	$ 32,463	$0	$0	$72,233	$72,233
LAC	175,986	1.09	$ 285,164	$ 1.76	$ 44,484	-$22,974	-$34,461	$217,705	$206,218
LAD	189,627	1.17	$ 307,911	$ 1.90	$ 44,484	-$5,744	-$11,487	$257,684	$251,940
LEC	88,153	0.54	$ 171,871	$ 1.06	$ 36,071	$0	$0	$135,800	$135,800
LFC	72,617	0.45	$ 120,333	$ 0.74	$ 36,071	$0	$0	$84,262	$84,262
LFD	78,505	0.48	$ 125,628	$ 0.77	$ 36,071	$0	$0	$89,557	$89,557
SXX Average	25,778	1.63	$ 43,160	$ 2.72	$ 13,923				
MXX Average	94,144	1.58	$ 155,616	$ 2.61	$ 35,251				
LXX Average	120,978	0.75	$ 202,181	$ 1.25	$ 39,436				
XAX Average	123,026	2.05	$ 198,445	$ 3.29	$ 33,055				
XEX Average	54,176	0.84	$ 106,597	$ 1.68	$ 27,191				
XFX Average	50,636	0.83	$ 82,387	$ 1.35	$ 27,191				
ALL Average	80,300	1.32	$ 133,652	$ 2.19	$ 29,537				

CTZ14 Palmdale - Floating Head Pressure									
	Energy Savings (kWh)	Energy Savings/ SF (kWh)	TDV Cost Savings ($)	TDV Cost Savings /SF ($)	Measure Cost ($)	Refrigerant Cost Savings Range ($)		Net Savings Range ($)	
SAC	36,364	2.29	$ 57,955	$ 3.66	$ 15,248	-$3,738	-$5,607	$38,969	$37,100
SAD	41,444	2.61	$ 66,160	$ 4.17	$ 15,248	-$934	-$1,869	$49,978	$49,043
SEC	17,764	1.12	$ 33,276	$ 2.10	$ 13,040	$0	$0	$20,236	$20,236
SFC	22,121	1.40	$ 35,011	$ 2.21	$ 13,040	$0	$0	$21,971	$21,971
SFD	25,252	1.59	$ 39,265	$ 2.48	$ 13,040	$0	$0	$26,225	$26,225
MAC	134,446	2.26	$ 212,596	$ 3.57	$ 39,433	-$18,802	-$28,202	$154,361	$144,960
MAD	147,212	2.47	$ 233,430	$ 3.92	$ 39,433	-$4,285	-$9,401	$189,712	$184,596
MEC	63,563	1.07	$ 122,184	$ 2.05	$ 32,463	$0	$0	$89,721	$89,721
MFC	80,608	1.35	$ 128,672	$ 2.16	$ 32,463	$0	$0	$96,209	$96,209
MFD	94,174	1.58	$ 147,557	$ 2.48	$ 32,463	$0	$0	$115,094	$115,094
LAC	171,801	1.06	$ 275,765	$ 1.70	$ 44,484	-$22,974	-$34,461	$208,307	$196,820
LAD	186,133	1.15	$ 302,171	$ 1.86	$ 44,484	-$5,744	-$11,487	$251,943	$246,200
LEC	99,380	0.61	$ 178,510	$ 1.10	$ 36,071	$0	$0	$142,439	$142,439
LFC	115,817	0.71	$ 179,044	$ 1.10	$ 36,071	$0	$0	$142,973	$142,973
LFD	125,481	0.77	$ 189,572	$ 1.17	$ 36,071	$0	$0	$153,501	$153,501
SXX Average	28,589	1.80	$ 46,334	$ 2.92	$ 13,923				
MXX Average	104,001	1.75	$ 168,887	$ 2.84	$ 35,251				
LXX Average	139,722	0.86	$ 225,012	$ 1.39	$ 39,436				
XAX Average	119,567	1.97	$ 191,346	$ 3.15	$ 33,055				
XEX Average	60,236	0.93	$ 111,323	$ 1.75	$ 27,191				
XFX Average	77,242	1.24	$ 119,853	$ 1.93	$ 27,191				
ALL Average	90,771	1.47	$ 146,744	$ 2.38	$ 29,537				

CTZ15 Palm Springs - Floating Head Pressure									
	Energy Savings (kWh)	Energy Savings/ SF (kWh)	TDV Cost Savings ($)	TDV Cost Savings /SF ($)	Measure Cost ($)	Refrigerant Cost Savings Range ($)		Net Savings Range ($)	
SAC	32,567	2.05	$ 50,604	$ 3.19	$ 15,248	-$3,738	-$5,607	$31,618	$29,749
SAD	38,403	2.42	$ 59,628	$ 3.76	$ 15,248	-$934	-$1,869	$43,445	$42,511
SEC	16,456	1.04	$ 33,045	$ 2.08	$ 13,040	$0	$0	$20,005	$20,005
SFC	11,572	0.73	$ 19,303	$ 1.22	$ 13,040	$0	$0	$6,263	$6,263
SFD	12,384	0.78	$ 20,318	$ 1.28	$ 13,040	$0	$0	$7,278	$7,278
MAC	114,327	1.92	$ 177,700	$ 2.98	$ 39,433	-$18,802	-$28,202	$119,465	$110,064
MAD	130,137	2.19	$ 201,987	$ 3.39	$ 39,433	-$4,285	-$9,401	$158,269	$153,153
MEC	57,367	0.96	$ 109,377	$ 1.84	$ 32,463	$0	$0	$76,914	$76,914
MFC	44,760	0.75	$ 70,833	$ 1.19	$ 32,463	$0	$0	$38,370	$38,370
MFD	50,255	0.84	$ 79,581	$ 1.34	$ 32,463	$0	$0	$47,118	$47,118
LAC	153,344	0.95	$ 239,633	$ 1.48	$ 44,484	-$22,974	-$34,461	$172,175	$160,688
LAD	181,873	1.12	$ 282,885	$ 1.74	$ 44,484	-$5,744	-$11,487	$232,658	$226,914
LEC	86,487	0.53	$ 168,658	$ 1.04	$ 36,071	$0	$0	$132,587	$132,587
LFC	56,150	0.35	$ 93,758	$ 0.58	$ 36,071	$0	$0	$57,687	$57,687
LFD	59,380	0.37	$ 97,745	$ 0.60	$ 36,071	$0	$0	$61,674	$61,674
SXX Average	22,276	1.41	$ 36,579	$ 2.31	$ 13,923				
MXX Average	79,369	1.33	$ 127,896	$ 2.15	$ 35,251				
LXX Average	107,447	0.66	$ 176,536	$ 1.09	$ 39,436				
XAX Average	108,442	1.78	$ 168,739	$ 2.76	$ 33,055				
XEX Average	53,437	0.84	$ 103,693	$ 1.65	$ 27,191				
XFX Average	39,084	0.64	$ 63,590	$ 1.03	$ 27,191				
ALL Average	69,697	1.13	$ 113,670	$ 1.85	$ 29,537				

Condenser Specific Efficiency

CTZ01 Arcata - Condenser Specific Efficiency						
	Energy Savings (kWh)	Energy Savings/ SF (kWh)	TDV Cost Savings ($)	TDV Cost Savings /SF ($)	Measure Cost ($)	Benefit/ Cost Ratio
SAC-EC	579	0.04	$1,299	$0.08	$1,731	0.75
SAC-Non-EC	579	0.04	$1,299	$0.08	$1,099	1.18
SAD-EC	431	0.03	$979	$0.06	$1,738	0.56
SAD-Non-EC	431	0.03	$979	$0.06	$1,103	0.89
SEC	633	0.04	$1,255	$0.08	$81	15.43
MAC-EC	2,467	0.04	$5,829	$0.10	$5,597	1.04
MAC-Non-EC	2,467	0.04	$5,829	$0.10	$3,554	1.64
MAD-EC	2,083	0.03	$4,779	$0.08	$5,668	0.84
MAD-Non-EC	2,083	0.03	$4,779	$0.08	$3,599	1.33
MEC	2,781	0.05	$5,491	$0.09	$261	21.04
LAC-EC	1,897	0.01	$4,414	$0.03	$8,724	0.51
LAC-Non-EC	1,897	0.01	$4,414	$0.03	$5,540	0.80
LAD-EC	1,334	0.01	$2,857	$0.02	$8,876	0.32
LAD-Non-EC	1,334	0.01	$2,857	$0.02	$5,636	0.51
LEC	1,603	0.01	$3,239	$0.02	$362	8.94
SXX Average	531	0.03	$1,162	$0.07	$1,150	3.76
MXX Average	2,376	0.04	$5,342	$0.09	$3,736	5.18
LXX Average	1,613	0.01	$3,556	$0.02	$5,828	2.22
XAX Average	1,465	0.03	$3,360	$0.06	$5,389	0.67
XEX Average	1,672	0.03	$3,328	$0.06	$235	15.14
ALL Average	1,507	0.03	$3,353	$0.06	$3,571	3.72

CTZ03 Oakland - Condenser Specific Efficiency						
	Energy Savings (kWh)	Energy Savings/ SF (kWh)	TDV Cost Savings ($)	TDV Cost Savings /SF ($)	Measure Cost ($)	Benefit/ Cost Ratio
SAC-EC	906	0.06	$2,332	$0.15	$1,731	1.35
SAC-Non-EC	906	0.06	$2,332	$0.15	$1,099	2.12
SAD-EC	667	0.04	$1,887	$0.12	$1,738	1.09
SAD-Non-EC	667	0.04	$1,887	$0.12	$1,103	1.71
SEC	646	0.04	$1,237	$0.08	$81	15.21
MAC-EC	4,015	0.07	$10,386	$0.17	$5,597	1.86
MAC-Non-EC	4,015	0.07	$10,386	$0.17	$3,554	2.92
MAD-EC	3,241	0.05	$8,891	$0.15	$5,668	1.57
MAD-Non-EC	3,241	0.05	$8,891	$0.15	$3,599	2.47
MEC	2,856	0.05	$5,482	$0.09	$261	21.00
LAC-EC	3,092	0.02	$7,965	$0.05	$8,724	0.91
LAC-Non-EC	3,092	0.02	$7,965	$0.05	$5,540	1.44
LAD-EC	1,828	0.01	$4,993	$0.03	$8,876	0.56
LAD-Non-EC	1,828	0.01	$4,993	$0.03	$5,636	0.89
LEC	1,718	0.01	$3,373	$0.02	$362	9.31
SXX Average	758	0.05	$1,935	$0.12	$1,150	4.30
MXX Average	3,474	0.06	$8,807	$0.15	$3,736	5.96
LXX Average	2,312	0.01	$5,858	$0.04	$5,828	2.62
XAX Average	2,292	0.04	$6,076	$0.11	$5,389	1.22
XEX Average	1,740	0.03	$3,364	$0.06	$235	15.18
ALL Average	2,181	0.04	$5,533	$0.10	$3,571	4.29

CTZ05 Santa Maria - Condenser Specific Efficiency						
	Energy Savings (kWh)	Energy Savings/ SF (kWh)	TDV Cost Savings ($)	TDV Cost Savings /SF ($)	Measure Cost ($)	Benefit/ Cost Ratio
SAC-EC	828	0.05	$1,851	$0.12	$1,731	1.07
SAC-Non-EC	828	0.05	$1,851	$0.12	$1,099	1.68
SAD-EC	618	0.04	$1,433	$0.09	$1,738	0.82
SAD-Non-EC	618	0.04	$1,433	$0.09	$1,103	1.30
SEC	635	0.04	$1,228	$0.08	$81	15.10
MAC-EC	3,671	0.06	$8,561	$0.14	$5,597	1.53
MAC-Non-EC	3,671	0.06	$8,561	$0.14	$3,554	2.41
MAD-EC	2,996	0.05	$7,129	$0.12	$5,668	1.26
MAD-Non-EC	2,996	0.05	$7,129	$0.12	$3,599	1.98
MEC	2,804	0.05	$5,420	$0.09	$261	20.77
LAC-EC	2,848	0.02	$6,354	$0.04	$8,724	0.73
LAC-Non-EC	2,848	0.02	$6,354	$0.04	$5,540	1.15
LAD-EC	4,759	0.03	$3,943	$0.02	$8,876	0.44
LAD-Non-EC	4,759	0.03	$3,943	$0.02	$5,636	0.70
LEC	1,686	0.01	$3,346	$0.02	$362	9.24
SXX Average	705	0.04	$1,559	$0.10	$1,150	4.00
MXX Average	3,228	0.05	$7,360	$0.12	$3,736	5.59
LXX Average	3,380	0.02	$4,788	$0.03	$5,828	2.45
XAX Average	2,620	0.04	$4,879	$0.09	$5,389	0.98
XEX Average	1,708	0.03	$3,331	$0.06	$235	15.04
ALL Average	2,438	0.04	$4,569	$0.08	$3,571	4.01

CTZ07 San Diego-Lindbergh - Condenser Specific Efficiency						
	Energy Savings (kWh)	Energy Savings/ SF (kWh)	TDV Cost Savings ($)	TDV Cost Savings /SF ($)	Measure Cost ($)	Benefit/ Cost Ratio
SAC-EC	1,250	0.08	$2,759	$0.17	$1,731	1.59
SAC-Non-EC	1,250	0.08	$2,759	$0.17	$1,099	2.51

SAD-EC	939	0.06	$2,180	$0.14	$1,738	1.25
SAD-Non-EC	939	0.06	$2,180	$0.14	$1,103	1.98
SEC	647	0.04	$1,264	$0.08	$81	15.54
MAC-EC	5,859	0.10	$13,109	$0.22	$5,597	2.34
MAC-Non-EC	5,859	0.10	$13,109	$0.22	$3,554	3.69
MAD-EC	4,616	0.08	$10,813	$0.18	$5,668	1.91
MAD-Non-EC	4,616	0.08	$10,813	$0.18	$3,599	3.00
MEC	2,892	0.05	$5,678	$0.10	$261	21.75
LAC-EC	4,385	0.03	$9,692	$0.06	$8,724	1.11
LAC-Non-EC	4,385	0.03	$9,692	$0.06	$5,540	1.75
LAD-EC	2,329	0.01	$5,616	$0.03	$8,876	0.63
LAD-Non-EC	2,329	0.01	$5,616	$0.03	$5,636	1.00
LEC	1,767	0.01	$3,515	$0.02	$362	9.71
SXX Average	1,005	0.06	$2,228	$0.14	$1,150	4.58
MXX Average	4,768	0.08	$10,705	$0.18	$3,736	6.54
LXX Average	3,039	0.02	$6,826	$0.04	$5,828	2.84
XAX Average	3,230	0.06	$7,362	$0.13	$5,389	1.47
XEX Average	1,769	0.03	$3,486	$0.07	$235	15.67
ALL Average	2,937	0.05	$6,586	$0.12	$3,571	4.65

CTZ08 Fullerton - Condenser Specific Efficiency

	Energy Savings (kWh)	Energy Savings/ SF (kWh)	TDV Cost Savings ($)	TDV Cost Savings /SF ($)	Measure Cost ($)	Benefit/ Cost Ratio
SAC-EC	1,428	0.09	$4,548	$0.29	$1,853	2.45
SAC-Non-EC	1,428	0.09	$4,548	$0.29	$1,177	3.87
SAD-EC	1,034	0.07	$3,827	$0.24	$1,906	2.01
SAD-Non-EC	1,034	0.07	$3,827	$0.24	$1,210	3.16
SEC	504	0.03	$961	$0.06	$79	12.19
MAC-EC	5,962	0.10	$18,253	$0.31	$6,050	3.02
MAC-Non-EC	5,962	0.10	$18,253	$0.31	$3,841	4.75
MAD-EC	4,691	0.08	$15,966	$0.27	$6,228	2.56
MAD-Non-EC	4,691	0.08	$15,966	$0.27	$3,955	4.04
MEC	3,453	0.06	$6,621	$0.11	$277	23.90
LAC-EC	5,876	0.04	$18,734	$0.12	$9,459	1.98
LAC-Non-EC	5,876	0.04	$18,734	$0.12	$6,006	3.12
LAD-EC	2,815	0.02	$12,006	$0.07	$9,862	1.22
LAD-Non-EC	2,815	0.02	$12,006	$0.07	$6,262	1.92
LEC	1,457	0.01	$2,830	$0.02	$352	8.03
SXX Average	1,086	0.07	$3,542	$0.22	$1,245	4.74
MXX Average	4,952	0.08	$15,012	$0.25	$4,070	7.65
LXX Average	3,768	0.02	$12,862	$0.08	$6,388	3.25
XAX Average	3,634	0.06	$12,222	$0.22	$5,893	2.21
XEX Average	1,805	0.03	$3,471	$0.06	$236	14.71
ALL Average	3,268	0.06	$10,472	$0.18	$3,901	5.21

CTZ10 Riverside - Condenser Specific Efficiency

	Energy Savings (kWh)	Energy Savings/ SF (kWh)	TDV Cost Savings ($)	TDV Cost Savings /SF ($)	Measure Cost ($)	Benefit/ Cost Ratio
SAC-EC	2,252	0.14	$7,752	$0.49	$1,853	4.18
SAC-Non-EC	2,252	0.14	$7,752	$0.49	$1,177	6.59
SAD-EC	2,014	0.13	$7,716	$0.49	$1,906	4.05
SAD-Non-EC	2,014	0.13	$7,716	$0.49	$1,210	6.38
SEC	471	0.03	$881	$0.06	$79	11.17
MAC-EC	8,795	0.15	$28,461	$0.48	$6,050	4.70
MAC-Non-EC	8,795	0.15	$28,461	$0.48	$3,841	7.41
MAD-EC	7,913	0.13	$27,696	$0.47	$6,228	4.45
MAD-Non-EC	7,913	0.13	$27,696	$0.47	$3,955	7.00
MEC	3,267	0.05	$6,230	$0.10	$277	22.49
LAC-EC	9,877	0.06	$36,889	$0.23	$9,459	3.90
LAC-Non-EC	9,877	0.06	$36,889	$0.23	$6,006	6.14
LAD-EC	6,715	0.04	$29,885	$0.18	$9,862	3.03
LAD-Non-EC	6,715	0.04	$29,885	$0.18	$6,262	4.77
LEC	1,427	0.01	$2,741	$0.02	$352	7.78
SXX Average	1,801	0.11	$6,363	$0.40	$1,245	6.47
MXX Average	7,337	0.12	$23,709	$0.40	$4,070	9.21
LXX Average	6,922	0.04	$27,258	$0.17	$6,388	5.12
XAX Average	6,261	0.11	$23,066	$0.39	$5,893	4.05
XEX Average	1,722	0.03	$3,284	$0.06	$236	13.81

CTZ12 Sacramento - Condenser Specific Efficiency

	Energy Savings (kWh)	Energy Savings/ SF (kWh)	TDV Cost Savings ($)	TDV Cost Savings /SF ($)	Measure Cost ($)	Benefit/ Cost Ratio
SAC-EC	1,906	0.12	$7,066	$0.45	$1,853	3.81
SAC-Non-EC	1,906	0.12	$7,066	$0.45	$1,177	6.01
SAD-EC	1,687	0.11	$7,040	$0.44	$1,906	3.69
SAD-Non-EC	1,687	0.11	$7,040	$0.44	$1,210	5.82
SEC	467	0.03	$890	$0.06	$79	11.29
MAC-EC	7,417	0.12	$25,773	$0.43	$6,050	4.26
MAC-Non-EC	7,417	0.12	$25,773	$0.43	$3,841	6.71
MAD-EC	6,639	0.11	$25,195	$0.42	$6,228	4.05
MAD-Non-EC	6,639	0.11	$25,195	$0.42	$3,955	6.37
MEC	3,182	0.05	$6,141	$0.10	$277	22.17
LAC-EC	8,183	0.05	$33,356	$0.21	$9,459	3.53
LAC-Non-EC	8,183	0.05	$33,356	$0.21	$6,006	5.55

LAD-EC	5,700	0.04	$27,900	$0.17	$9,862	2.83
LAD-Non-EC	5,700	0.04	$27,900	$0.17	$6,262	4.46
LEC	1,384	0.01	$2,706	$0.02	$352	7.68
SXX Average	1,531	0.10	$5,820	$0.37	$1,245	6.12
MXX Average	6,259	0.11	$21,616	$0.36	$4,070	8.71
LXX Average	5,830	0.04	$25,044	$0.15	$6,388	4.81
XAX Average	5,255	0.09	$21,055	$0.35	$5,893	3.69
XEX Average	1,678	0.03	$3,245	$0.06	$236	13.71
ALL Average	4,540	0.08	$17,493	$0.29	$3,901	6.55

CTZ13 Fresno - Condenser Specific Efficiency

	Energy Savings (kWh)	Energy Savings/ SF (kWh)	TDV Cost Savings ($)	TDV Cost Savings /SF ($)	Measure Cost ($)	Benefit/ Cost Ratio
SAC-EC	2,723	0.17	$8,633	$0.54	$1,853	4.66
SAC-Non-EC	2,723	0.17	$8,633	$0.54	$1,177	7.34
SAD-EC	2,605	0.16	$8,837	$0.56	$1,906	4.64
SAD-Non-EC	2,605	0.16	$8,837	$0.56	$1,210	7.30
SEC	453	0.03	$872	$0.06	$79	11.06
MAC-EC	10,449	0.18	$31,487	$0.53	$6,050	5.20
MAC-Non-EC	10,449	0.18	$31,487	$0.53	$3,841	8.20
MAD-EC	9,849	0.17	$31,220	$0.52	$6,228	5.01
MAD-Non-EC	9,849	0.17	$31,220	$0.52	$3,955	7.89
MEC	3,151	0.05	$6,114	$0.10	$277	22.07
LAC-EC	12,446	0.08	$42,273	$0.26	$9,459	4.47
LAC-Non-EC	12,446	0.08	$42,273	$0.26	$6,006	7.04
LAD-EC	9,615	0.06	$36,284	$0.22	$9,862	3.68
LAD-Non-EC	9,615	0.06	$36,284	$0.22	$6,262	5.79
LEC	1,401	0.01	$2,723	$0.02	$352	7.73
SXX Average	2,222	0.14	$7,162	$0.45	$1,245	7.00
MXX Average	8,749	0.15	$26,306	$0.44	$4,070	9.68
LXX Average	9,105	0.06	$31,968	$0.20	$6,388	5.74
XAX Average	7,948	0.14	$26,456	$0.44	$5,893	4.61
XEX Average	1,668	0.03	$3,237	$0.06	$236	13.62
ALL Average	6,692	0.11	$21,812	$0.36	$3,901	7.47

CTZ14 Palmdale - Condenser Specific Efficiency

	Energy Savings (kWh)	Energy Savings/ SF (kWh)	TDV Cost Savings ($)	TDV Cost Savings /SF ($)	Measure Cost ($)	Benefit/ Cost Ratio
SAC-EC	2,725	0.17	$8,677	$0.55	$1,853	4.68
SAC-Non-EC	2,725	0.17	$8,677	$0.55	$1,177	7.37
SAD-EC	2,617	0.17	$8,882	$0.56	$1,906	4.66
SAD-Non-EC	2,617	0.17	$8,882	$0.56	$1,210	7.34
SEC	386	0.02	$756	$0.05	$79	9.59
MAC-EC	10,195	0.17	$31,122	$0.52	$6,050	5.14
MAC-Non-EC	10,195	0.17	$31,122	$0.52	$3,841	8.10
MAD-EC	9,715	0.16	$31,149	$0.52	$6,228	5.00
MAD-Non-EC	9,715	0.16	$31,149	$0.52	$3,955	7.88
MEC	2,669	0.04	$5,340	$0.09	$277	19.27
LAC-EC	12,556	0.08	$42,300	$0.26	$9,459	4.47
LAC-Non-EC	12,556	0.08	$42,300	$0.26	$6,006	7.04
LAD-EC	9,744	0.06	$36,257	$0.22	$9,862	3.68
LAD-Non-EC	9,744	0.06	$36,257	$0.22	$6,262	5.79
LEC	1,280	0.01	$2,545	$0.02	$352	7.22
SXX Average	2,214	0.14	$7,175	$0.45	$1,245	6.73
MXX Average	8,498	0.14	$25,976	$0.44	$4,070	9.08
LXX Average	9,176	0.06	$31,932	$0.20	$6,388	5.64
XAX Average	7,925	0.13	$26,398	$0.44	$5,893	4.61
XEX Average	1,445	0.03	$2,881	$0.05	$236	12.03
ALL Average	6,629	0.11	$21,694	$0.36	$3,901	7.15

CTZ15 Palm Springs - Condenser Specific Efficiency

	Energy Savings (kWh)	Energy Savings/ SF (kWh)	TDV Cost Savings ($)	TDV Cost Savings /SF ($)	Measure Cost ($)	Benefit/ Cost Ratio
SAC-EC	5,478	0.35	$13,492	$0.85	$1,853	7.28
SAC-Non-EC	5,478	0.35	$13,492	$0.85	$1,177	11.47
SAD-EC	5,453	0.34	$13,688	$0.86	$1,906	7.18
SAD-Non-EC	5,453	0.34	$13,688	$0.86	$1,210	11.31
SEC	450	0.03	$890	$0.06	$79	11.29
MAC-EC	19,835	0.33	$47,239	$0.79	$6,050	7.81
MAC-Non-EC	19,835	0.33	$47,239	$0.79	$3,841	12.30
MAD-EC	19,474	0.33	$47,364	$0.80	$6,228	7.60
MAD-Non-EC	19,474	0.33	$47,364	$0.80	$3,955	11.98
MEC	3,349	0.06	$6,844	$0.11	$277	24.70
LAC-EC	26,006	0.16	$66,062	$0.41	$9,459	6.98
LAC-Non-EC	26,006	0.16	$66,062	$0.41	$6,006	11.00
LAD-EC	21,639	0.13	$57,172	$0.35	$9,862	5.80
LAD-Non-EC	21,639	0.13	$57,172	$0.35	$6,262	9.13
LEC	1,570	0.01	$3,159	$0.02	$352	8.96
SXX Average	4,462	0.28	$11,050	$0.70	$1,245	9.71
MXX Average	16,393	0.28	$39,210	$0.66	$4,070	12.88
LXX Average	19,372	0.12	$49,925	$0.31	$6,388	8.37
XAX Average	16,314	0.27	$40,836	$0.68	$5,893	7.11
XEX Average	1,790	0.03	$3,631	$0.06	$236	14.99
ALL Average	13,409	0.23	$33,395	$0.55	$3,901	10.32

Floating Suction Pressure

CTZ01 Arcata - Floating Suction Pressure						
	Energy Savings (kWh)	Energy Savings/ SF (kWh)	TDV Cost Savings ($)	TDV Cost Savings /SF ($)	Measure Cost ($)	Benefit/ Cost Ratio
SAC	6,517	0.41	$ 12,442	$ 0.79	$ 5,075	2.45
SAD	8,917	0.56	$ 17,141	$ 1.08	$ 5,075	3.38
SEC	6,534	0.41	$ 12,424	$ 0.78	$ 5,075	2.45
SFC	7,263	0.46	$ 13,964	$ 0.88	$ 5,075	2.75
SFD	10,557	0.67	$ 20,460	$ 1.29	$ 5,075	4.03
MAC	28,350	0.48	$ 53,015	$ 0.89	$ 10,149	5.22
MAD	31,368	0.53	$ 60,002	$ 1.01	$ 10,149	5.91
MEC	28,097	0.47	$ 53,567	$ 0.90	$ 10,149	5.28
MFC	32,856	0.55	$ 62,333	$ 1.05	$ 10,149	6.14
MFD	38,106	0.64	$ 73,049	$ 1.23	$ 10,149	7.20
LAC	39,151	0.24	$ 75,621	$ 0.47	$ 10,149	7.45
LAD	46,401	0.29	$ 89,086	$ 0.55	$ 10,149	8.78
LEC	40,389	0.25	$ 77,970	$ 0.48	$ 10,149	7.68
LFC	46,092	0.28	$ 88,899	$ 0.55	$ 10,149	8.76
LFD	57,632	0.36	$ 110,356	$ 0.68	$ 10,149	10.87
SXX Average	7,958	0.50	$ 15,286	$ 0.96	$ 5,075	3.01
MXX Average	31,755	0.53	$ 60,393	$ 1.01	$ 10,149	5.95
LXX Average	45,933	0.28	$ 88,386	$ 0.55	$ 10,149	8.71
XAX Average	26,784	0.42	$ 51,218	$ 0.80	$ 8,458	6.06
XEX Average	25,007	0.38	$ 47,987	$ 0.72	$ 8,458	5.67
XFX Average	32,084	0.49	$ 61,510	$ 0.95	$ 8,458	7.27
ALL Average	28,549	0.44	$ 54,689	$ 0.84	$ 8,458	6.47

CTZ03 Oakland - Floating Suction Pressure						
	Energy Savings (kWh)	Energy Savings/ SF (kWh)	TDV Cost Savings ($)	TDV Cost Savings /SF ($)	Measure Cost ($)	Benefit/ Cost Ratio
SAC	6,734	0.42	$ 13,154	$ 0.83	$ 5,075	2.59
SAD	9,196	0.58	$ 17,826	$ 1.12	$ 5,075	3.51
SEC	6,691	0.42	$ 12,646	$ 0.80	$ 5,075	2.49
SFC	7,484	0.47	$ 14,382	$ 0.91	$ 5,075	2.83
SFD	10,885	0.69	$ 20,968	$ 1.32	$ 5,075	4.13
MAC	29,064	0.49	$ 55,810	$ 0.94	$ 10,149	5.50
MAD	32,332	0.54	$ 62,769	$ 1.05	$ 10,149	6.18
MEC	29,173	0.49	$ 55,231	$ 0.93	$ 10,149	5.44
MFC	33,727	0.57	$ 63,748	$ 1.07	$ 10,149	6.28
MFD	39,844	0.67	$ 76,653	$ 1.29	$ 10,149	7.55
LAC	40,939	0.25	$ 82,625	$ 0.51	$ 10,149	8.14
LAD	47,450	0.29	$ 91,044	$ 0.56	$ 10,149	8.97
LEC	41,988	0.26	$ 81,948	$ 0.51	$ 10,149	8.07
LFC	47,934	0.30	$ 93,411	$ 0.58	$ 10,149	9.20
LFD	59,211	0.37	$ 113,854	$ 0.70	$ 10,149	11.22
SXX Average	8,198	0.52	$ 15,795	$ 1.00	$ 5,075	3.11
MXX Average	32,828	0.55	$ 62,842	$ 1.06	$ 10,149	6.19
LXX Average	47,504	0.29	$ 92,576	$ 0.57	$ 10,149	9.12
XAX Average	27,619	0.43	$ 53,871	$ 0.84	$ 8,458	6.37
XEX Average	25,951	0.39	$ 49,942	$ 0.74	$ 8,458	5.90
XFX Average	33,181	0.51	$ 63,836	$ 0.98	$ 8,458	7.55
ALL Average	29,510	0.45	$ 57,071	$ 0.87	$ 8,458	6.75

CTZ05 Santa Maria - Floating Suction Pressure						
	Energy Savings (kWh)	Energy Savings/ SF (kWh)	TDV Cost Savings ($)	TDV Cost Savings /SF ($)	Measure Cost ($)	Benefit/ Cost Ratio
SAC	6,726	0.42	$ 13,056	$ 0.82	$ 5,075	2.57
SAD	9,159	0.58	$ 17,701	$ 1.12	$ 5,075	3.49
SEC	6,662	0.42	$ 12,691	$ 0.80	$ 5,075	2.50
SFC	7,418	0.47	$ 14,293	$ 0.90	$ 5,075	2.82
SFD	10,779	0.68	$ 20,834	$ 1.31	$ 5,075	4.11
MAC	28,905	0.49	$ 55,329	$ 0.93	$ 10,149	5.45
MAD	32,203	0.54	$ 62,146	$ 1.04	$ 10,149	6.12
MEC	28,872	0.48	$ 54,956	$ 0.92	$ 10,149	5.41
MFC	33,430	0.56	$ 63,375	$ 1.06	$ 10,149	6.24
MFD	39,296	0.66	$ 75,567	$ 1.27	$ 10,149	7.45
LAC	40,736	0.25	$ 81,930	$ 0.51	$ 10,149	8.07
LAD	47,067	0.29	$ 90,047	$ 0.56	$ 10,149	8.87
LEC	41,572	0.26	$ 81,227	$ 0.50	$ 10,149	8.00
LFC	47,701	0.29	$ 92,824	$ 0.57	$ 10,149	9.15
LFD	58,964	0.36	$ 113,845	$ 0.70	$ 10,149	11.22
SXX Average	8,149	0.51	$ 15,715	$ 0.99	$ 5,075	3.10
MXX Average	32,541	0.55	$ 62,275	$ 1.05	$ 10,149	6.14
LXX Average	47,208	0.29	$ 91,975	$ 0.57	$ 10,149	9.06
XAX Average	27,466	0.43	$ 53,368	$ 0.83	$ 8,458	6.31
XEX Average	25,702	0.39	$ 49,625	$ 0.74	$ 8,458	5.87
XFX Average	32,931	0.50	$ 63,456	$ 0.97	$ 8,458	7.50
ALL Average	29,299	0.45	$ 56,655	$ 0.87	$ 8,458	6.70

CTZ07 San Diego-Lindbergh - Floating Suction Pressure						
	Energy Savings	Energy Savings/	TDV Cost	TDV Cost	Measure	Benefit/

	(kWh)	SF (kWh)	Savings ($)	Savings /SF ($)	Cost ($)	Cost Ratio
SAC	7,079	0.45	$ 13,919	$ 0.88	$ 5,075	2.74
SAD	9,639	0.61	$ 18,805	$ 1.19	$ 5,075	3.71
SEC	7,006	0.44	$ 13,385	$ 0.84	$ 5,075	2.64
SFC	7,922	0.50	$ 15,450	$ 0.97	$ 5,075	3.04
SFD	11,562	0.73	$ 22,409	$ 1.41	$ 5,075	4.42
MAC	27,095	0.45	$ 50,773	$ 0.85	$ 10,149	5.00
MAD	31,510	0.53	$ 60,011	$ 1.01	$ 10,149	5.91
MEC	28,377	0.48	$ 52,286	$ 0.88	$ 10,149	5.15
MFC	33,087	0.56	$ 62,129	$ 1.04	$ 10,149	6.12
MFD	40,580	0.68	$ 77,961	$ 1.31	$ 10,149	7.68
LAC	42,336	0.26	$ 85,855	$ 0.53	$ 10,149	8.46
LAD	47,543	0.29	$ 91,391	$ 0.56	$ 10,149	9.00
LEC	44,164	0.27	$ 86,362	$ 0.53	$ 10,149	8.51
LFC	50,824	0.31	$ 100,282	$ 0.62	$ 10,149	9.88
LFD	61,220	0.38	$ 119,176	$ 0.74	$ 10,149	11.74
SXX Average	8,642	0.55	$ 16,794	$ 1.06	$ 5,075	3.31
MXX Average	32,130	0.54	$ 60,632	$ 1.02	$ 10,149	5.97
LXX Average	49,217	0.30	$ 96,613	$ 0.60	$ 10,149	9.52
XAX Average	27,534	0.43	$ 53,459	$ 0.84	$ 8,458	6.32
XEX Average	26,516	0.40	$ 50,678	$ 0.75	$ 8,458	5.99
XFX Average	34,199	0.53	$ 66,234	$ 1.02	$ 8,458	7.83
ALL Average	29,996	0.46	$ 58,013	$ 0.89	$ 8,458	6.86

CTZ08 Fullerton - Floating Suction Pressure

	Energy Savings (kWh)	Energy Savings/ SF (kWh)	TDV Cost Savings ($)	TDV Cost Savings /SF ($)	Measure Cost ($)	Benefit/ Cost Ratio
SAC	7,244	0.46	$ 14,587	$ 0.92	$ 5,075	2.87
SAD	9,582	0.60	$ 19,731	$ 1.24	$ 5,075	3.89
SEC	6,620	0.42	$ 12,620	$ 0.80	$ 5,075	2.49
SFC	7,465	0.47	$ 14,471	$ 0.91	$ 5,075	2.85
SFD	10,794	0.68	$ 21,066	$ 1.33	$ 5,075	4.15
MAC	30,022	0.50	$ 56,068	$ 0.94	$ 10,149	5.52
MAD	31,712	0.53	$ 61,461	$ 1.03	$ 10,149	6.06
MEC	27,915	0.47	$ 50,986	$ 0.86	$ 10,149	5.02
MFC	32,636	0.55	$ 60,669	$ 1.02	$ 10,149	5.98
MFD	38,290	0.64	$ 72,897	$ 1.22	$ 10,149	7.18
LAC	46,292	0.29	$ 95,298	$ 0.59	$ 10,149	9.39
LAD	49,172	0.30	$ 97,113	$ 0.60	$ 10,149	9.57
LEC	44,216	0.27	$ 85,392	$ 0.53	$ 10,149	8.41
LFC	50,509	0.31	$ 97,914	$ 0.60	$ 10,149	9.65
LFD	62,622	0.39	$ 120,226	$ 0.74	$ 10,149	11.85
SXX Average	8,341	0.53	$ 16,495	$ 1.04	$ 5,075	3.25
MXX Average	32,115	0.54	$ 60,416	$ 1.01	$ 10,149	5.95
LXX Average	50,562	0.31	$ 99,189	$ 0.61	$ 10,149	9.77
XAX Average	29,004	0.45	$ 57,376	$ 0.89	$ 8,458	6.78
XEX Average	26,250	0.39	$ 49,666	$ 0.73	$ 8,458	5.87
XFX Average	33,719	0.51	$ 64,540	$ 0.97	$ 8,458	7.63
ALL Average	30,339	0.46	$ 58,700	$ 0.89	$ 8,458	6.94

CTZ10 Riverside - Floating Suction Pressure

	Energy Savings (kWh)	Energy Savings/ SF (kWh)	TDV Cost Savings ($)	TDV Cost Savings /SF ($)	Measure Cost ($)	Benefit/ Cost Ratio
SAC	7,509	0.47	$ 15,094	$ 0.95	$ 5,075	2.97
SAD	9,812	0.62	$ 20,131	$ 1.27	$ 5,075	3.97
SEC	6,721	0.42	$ 12,664	$ 0.80	$ 5,075	2.50
SFC	7,594	0.48	$ 14,640	$ 0.92	$ 5,075	2.88
SFD	11,001	0.69	$ 21,137	$ 1.33	$ 5,075	4.16
MAC	32,565	0.55	$ 63,989	$ 1.07	$ 10,149	6.30
MAD	34,383	0.58	$ 70,735	$ 1.19	$ 10,149	6.97
MEC	28,811	0.48	$ 52,517	$ 0.88	$ 10,149	5.17
MFC	33,897	0.57	$ 63,526	$ 1.07	$ 10,149	6.26
MFD	39,147	0.66	$ 75,407	$ 1.27	$ 10,149	7.43
LAC	49,034	0.30	$ 102,782	$ 0.63	$ 10,149	10.13
LAD	50,786	0.31	$ 103,850	$ 0.64	$ 10,149	10.23
LEC	44,043	0.27	$ 84,939	$ 0.52	$ 10,149	8.37
LFC	50,234	0.31	$ 97,612	$ 0.60	$ 10,149	9.62
LFD	62,400	0.38	$ 119,603	$ 0.74	$ 10,149	11.78
SXX Average	8,527	0.54	$ 16,733	$ 1.06	$ 5,075	3.30
MXX Average	33,761	0.57	$ 65,235	$ 1.10	$ 10,149	6.43
LXX Average	51,299	0.32	$ 101,757	$ 0.63	$ 10,149	10.03
XAX Average	30,682	0.47	$ 62,764	$ 0.96	$ 8,458	7.42
XEX Average	26,525	0.39	$ 50,040	$ 0.73	$ 8,458	5.92
XFX Average	34,046	0.52	$ 65,321	$ 0.99	$ 8,458	7.72
ALL Average	31,196	0.47	$ 61,242	$ 0.93	$ 8,458	7.24

CTZ12 Sacramento - Floating Suction Pressure

	Energy Savings (kWh)	Energy Savings/ SF (kWh)	TDV Cost Savings ($)	TDV Cost Savings /SF ($)	Measure Cost ($)	Benefit/ Cost Ratio
SAC	7,244	0.46	$ 14,587	$ 0.92	$ 5,075	2.87
SAD	9,582	0.60	$ 19,731	$ 1.24	$ 5,075	3.89
SEC	6,620	0.42	$ 12,620	$ 0.80	$ 5,075	2.49
SFC	7,465	0.47	$ 14,471	$ 0.91	$ 5,075	2.85
SFD	10,794	0.68	$ 21,066	$ 1.33	$ 5,075	4.15

MAC	33,136	0.56	$ 66,979	$ 1.12	$ 10,149	6.60
MAD	34,564	0.58	$ 72,452	$ 1.22	$ 10,149	7.14
MEC	29,506	0.50	$ 56,095	$ 0.94	$ 10,149	5.53
MFC	34,372	0.58	$ 66,036	$ 1.11	$ 10,149	6.51
MFD	39,173	0.66	$ 77,196	$ 1.30	$ 10,149	7.61
LAC	47,095	0.29	$ 99,445	$ 0.61	$ 10,149	9.80
LAD	49,764	0.31	$ 102,186	$ 0.63	$ 10,149	10.07
LEC	43,290	0.27	$ 84,476	$ 0.52	$ 10,149	8.32
LFC	49,101	0.30	$ 96,072	$ 0.59	$ 10,149	9.47
LFD	61,260	0.38	$ 118,473	$ 0.73	$ 10,149	11.67
SXX Average	8,341	0.53	$ 16,495	$ 1.04	$ 5,075	3.25
MXX Average	34,150	0.57	$ 67,751	$ 1.14	$ 10,149	6.68
LXX Average	50,102	0.31	$ 100,130	$ 0.62	$ 10,149	9.87
XAX Average	30,231	0.47	$ 62,563	$ 0.96	$ 8,458	7.40
XEX Average	26,472	0.39	$ 51,063	$ 0.75	$ 8,458	6.04
XFX Average	33,694	0.51	$ 65,552	$ 1.00	$ 8,458	7.75
ALL Average	30,864	0.47	$ 61,459	$ 0.93	$ 8,458	7.27

CTZ13 Fresno - Floating Suction Pressure

	Energy Savings (kWh)	Energy Savings/ SF (kWh)	TDV Cost Savings ($)	TDV Cost Savings /SF ($)	Measure Cost ($)	Benefit/ Cost Ratio
SAC	7,695	0.49	$ 15,503	$ 0.98	$ 5,075	3.05
SAD	10,030	0.63	$ 20,816	$ 1.31	$ 5,075	4.10
SEC	6,701	0.42	$ 12,709	$ 0.80	$ 5,075	2.50
SFC	7,564	0.48	$ 14,676	$ 0.93	$ 5,075	2.89
SFD	10,934	0.69	$ 21,199	$ 1.34	$ 5,075	4.18
MAC	34,787	0.58	$ 69,791	$ 1.17	$ 10,149	6.88
MAD	36,698	0.62	$ 77,160	$ 1.30	$ 10,149	7.60
MEC	30,171	0.51	$ 56,780	$ 0.95	$ 10,149	5.59
MFC	35,121	0.59	$ 67,744	$ 1.14	$ 10,149	6.67
MFD	40,050	0.67	$ 79,287	$ 1.33	$ 10,149	7.81
LAC	50,609	0.31	$ 105,799	$ 0.65	$ 10,149	10.42
LAD	52,149	0.32	$ 107,597	$ 0.66	$ 10,149	10.60
LEC	44,138	0.27	$ 85,740	$ 0.53	$ 10,149	8.45
LFC	50,116	0.31	$ 98,235	$ 0.61	$ 10,149	9.68
LFD	62,267	0.38	$ 120,350	$ 0.74	$ 10,149	11.86
SXX Average	8,585	0.54	$ 16,981	$ 1.07	$ 5,075	3.35
MXX Average	35,365	0.59	$ 70,153	$ 1.18	$ 10,149	6.91
LXX Average	51,856	0.32	$ 103,544	$ 0.64	$ 10,149	10.20
XAX Average	31,995	0.49	$ 66,111	$ 1.01	$ 8,458	7.82
XEX Average	27,003	0.40	$ 51,743	$ 0.76	$ 8,458	6.12
XFX Average	34,342	0.52	$ 66,915	$ 1.01	$ 8,458	7.91
ALL Average	31,935	0.49	$ 63,559	$ 0.96	$ 8,458	7.51

CTZ14 Palmdale - Floating Suction Pressure

	Energy Savings (kWh)	Energy Savings/ SF (kWh)	TDV Cost Savings ($)	TDV Cost Savings /SF ($)	Measure Cost ($)	Benefit/ Cost Ratio
SAC	7,448	0.47	$ 14,782	$ 0.93	$ 5,075	2.91
SAD	9,854	0.62	$ 20,149	$ 1.27	$ 5,075	3.97
SEC	6,458	0.41	$ 12,317	$ 0.78	$ 5,075	2.43
SFC	7,179	0.45	$ 13,839	$ 0.87	$ 5,075	2.73
SFD	10,410	0.66	$ 20,229	$ 1.28	$ 5,075	3.99
MAC	35,043	0.59	$ 70,049	$ 1.18	$ 10,149	6.90
MAD	35,878	0.60	$ 74,535	$ 1.25	$ 10,149	7.34
MEC	29,774	0.50	$ 56,557	$ 0.95	$ 10,149	5.57
MFC	34,398	0.58	$ 65,635	$ 1.10	$ 10,149	6.47
MFD	38,051	0.64	$ 74,366	$ 1.25	$ 10,149	7.33
LAC	50,225	0.31	$ 104,180	$ 0.64	$ 10,149	10.27
LAD	51,550	0.32	$ 105,381	$ 0.65	$ 10,149	10.38
LEC	43,079	0.27	$ 83,790	$ 0.52	$ 10,149	8.26
LFC	48,925	0.30	$ 95,182	$ 0.59	$ 10,149	9.38
LFD	61,025	0.38	$ 117,235	$ 0.72	$ 10,149	11.55
SXX Average	8,270	0.52	$ 16,263	$ 1.03	$ 5,075	3.20
MXX Average	34,629	0.58	$ 68,228	$ 1.15	$ 10,149	6.72
LXX Average	50,961	0.31	$ 101,154	$ 0.62	$ 10,149	9.97
XAX Average	31,666	0.49	$ 64,846	$ 0.99	$ 8,458	7.67
XEX Average	26,437	0.39	$ 50,888	$ 0.75	$ 8,458	6.02
XFX Average	33,331	0.50	$ 64,414	$ 0.97	$ 8,458	7.62
ALL Average	31,286	0.47	$ 61,882	$ 0.93	$ 8,458	7.32

CTZ15 Palm Springs - Floating Suction Pressure

	Energy Savings (kWh)	Energy Savings/ SF (kWh)	TDV Cost Savings ($)	TDV Cost Savings /SF ($)	Measure Cost ($)	Benefit/ Cost Ratio
SAC	8,711	0.55	$ 17,657	$ 1.11	$ 5,075	3.48
SAD	11,721	0.74	$ 24,697	$ 1.56	$ 5,075	4.87
SEC	6,863	0.43	$ 13,118	$ 0.83	$ 5,075	2.58
SFC	7,786	0.49	$ 15,192	$ 0.96	$ 5,075	2.99
SFD	11,259	0.71	$ 21,938	$ 1.38	$ 5,075	4.32
MAC	39,089	0.66	$ 77,943	$ 1.31	$ 10,149	7.68
MAD	43,925	0.74	$ 94,541	$ 1.59	$ 10,149	9.32
MEC	31,226	0.52	$ 57,946	$ 0.97	$ 10,149	5.71
MFC	36,768	0.62	$ 69,969	$ 1.17	$ 10,149	6.89
MFD	42,564	0.71	$ 83,746	$ 1.41	$ 10,149	8.25
LAC	60,618	0.37	$ 121,312	$ 0.75	$ 10,149	11.95

LAD	60,881	0.38	$ 129,036	$ 0.80	$ 10,149	12.71
LEC	46,544	0.29	$ 89,958	$ 0.55	$ 10,149	8.86
LFC	53,662	0.33	$ 105,150	$ 0.65	$ 10,149	10.36
LFD	65,726	0.41	$ 127,728	$ 0.79	$ 10,149	12.59
SXX Average	9,268	0.58	$ 18,520	$ 1.17	$ 5,075	3.65
MXX Average	38,714	0.65	$ 76,829	$ 1.29	$ 10,149	7.57
LXX Average	57,486	0.35	$ 114,637	$ 0.71	$ 10,149	11.30
XAX Average	37,491	0.57	$ 77,531	$ 1.19	$ 8,458	9.17
XEX Average	28,211	0.41	$ 53,674	$ 0.79	$ 8,458	6.35
XFX Average	36,294	0.55	$ 70,620	$ 1.06	$ 8,458	8.35
ALL Average	35,156	0.53	$ 69,995	$ 1.06	$ 8,458	8.28

Mechanical Subcooling

CTZ01 Arcata - Mechanical Subcooling						
	Energy Savings (kWh)	Energy Savings/ SF (kWh)	TDV Cost Savings ($)	TDV Cost Savings /SF ($)	Measure Cost ($)	Benefit/ Cost Ratio
SAC	6,566	0.41	$ 12,397	$ 0.78	$ 4,645	2.67
SAD	4,207	0.27	$ 7,645	$ 0.48	$ 4,220	1.81
SEC	6,985	0.44	$ 13,127	$ 0.83	$ 4,645	2.83
SFC	10,793	0.68	$ 20,460	$ 1.29	$ 4,645	4.40
SFD	12,126	0.77	$ 23,148	$ 1.46	$ 4,220	5.49
MAC	14,708	0.25	$ 26,984	$ 0.45	$ 8,582	3.14
MAD	11,593	0.19	$ 21,680	$ 0.36	$ 7,059	3.07
MEC	16,719	0.28	$ 31,718	$ 0.53	$ 8,582	3.70
MFC	29,680	0.50	$ 55,952	$ 0.94	$ 8,582	6.52
MFD	34,527	0.58	$ 65,653	$ 1.10	$ 7,059	9.30
LAC	52,771	0.33	$ 100,994	$ 0.62	$ 15,793	6.39
LAD	22,368	0.14	$ 41,357	$ 0.26	$ 11,863	3.49
LEC	51,627	0.32	$ 98,466	$ 0.61	$ 15,793	6.23
LFC	86,561	0.53	$ 165,401	$ 1.02	$ 15,793	10.47
LFD	71,323	0.44	$ 135,044	$ 0.83	$ 11,863	11.38
SXX Average	8,135	0.51	$ 15,356	$ 0.97	$ 4,475	3.43
MXX Average	21,445	0.36	$ 40,397	$ 0.68	$ 7,973	5.07
LXX Average	56,930	0.35	$ 108,252	$ 0.67	$ 14,221	7.61
XAX Average	18,702	0.26	$ 35,176	$ 0.49	$ 8,694	4.05
XEX Average	25,110	0.35	$ 47,771	$ 0.66	$ 9,673	4.94
XFX Average	40,835	0.58	$ 77,610	$ 1.11	$ 8,694	8.93
ALL Average	28,837	0.41	$ 54,668	$ 0.77	$ 8,890	6.15

CTZ03 Oakland - Mechanical Subcooling						
	Energy Savings (kWh)	Energy Savings/ SF (kWh)	TDV Cost Savings ($)	TDV Cost Savings /SF ($)	Measure Cost ($)	Benefit/ Cost Ratio
SAC	6,523	0.41	$ 12,727	$ 0.80	$ 4,645	2.74
SAD	4,199	0.26	$ 8,837	$ 0.56	$ 4,220	2.09
SEC	7,098	0.45	$ 13,314	$ 0.84	$ 4,645	2.87
SFC	10,958	0.69	$ 20,825	$ 1.31	$ 4,645	4.48
SFD	12,413	0.78	$ 23,638	$ 1.49	$ 4,220	5.60
MAC	14,559	0.24	$ 28,337	$ 0.48	$ 8,582	3.30
MAD	12,104	0.20	$ 26,441	$ 0.44	$ 7,059	3.75
MEC	17,456	0.29	$ 33,748	$ 0.57	$ 8,582	3.93
MFC	30,339	0.51	$ 57,358	$ 0.96	$ 8,582	6.68
MFD	36,299	0.61	$ 69,862	$ 1.17	$ 7,059	9.90
LAC	55,131	0.34	$ 115,589	$ 0.71	$ 15,793	7.32
LAD	22,838	0.14	$ 49,998	$ 0.31	$ 11,863	4.21
LEC	53,160	0.33	$ 102,257	$ 0.63	$ 15,793	6.47
LFC	89,317	0.55	$ 172,387	$ 1.06	$ 15,793	10.92
LFD	73,635	0.45	$ 141,692	$ 0.87	$ 11,863	11.94
SXX Average	8,238	0.52	$ 15,868	$ 1.00	$ 4,475	3.55
MXX Average	22,151	0.37	$ 43,149	$ 0.72	$ 7,973	5.41
LXX Average	58,816	0.36	$ 116,385	$ 0.72	$ 14,221	8.18
XAX Average	19,226	0.27	$ 40,321	$ 0.55	$ 8,694	4.64
XEX Average	25,905	0.36	$ 49,773	$ 0.68	$ 9,673	5.15
XFX Average	42,160	0.60	$ 80,960	$ 1.15	$ 8,694	9.31
ALL Average	29,735	0.42	$ 58,467	$ 0.81	$ 8,890	6.58

CTZ05 Santa Maria - Mechanical Subcooling						
	Energy Savings (kWh)	Energy Savings/ SF (kWh)	TDV Cost Savings ($)	TDV Cost Savings /SF ($)	Measure Cost ($)	Benefit/ Cost Ratio
SAC	6,554	0.41	$ 12,540	$ 0.79	$ 4,645	2.70
SAD	4,198	0.26	$ 8,312	$ 0.52	$ 4,220	1.97
SEC	7,084	0.45	$ 13,376	$ 0.84	$ 4,645	2.88
SFC	10,899	0.69	$ 20,674	$ 1.30	$ 4,645	4.45
SFD	12,339	0.78	$ 23,513	$ 1.48	$ 4,220	5.57
MAC	14,448	0.24	$ 26,806	$ 0.45	$ 8,582	3.12
MAD	12,002	0.20	$ 24,519	$ 0.41	$ 7,059	3.47
MEC	17,255	0.29	$ 33,071	$ 0.56	$ 8,582	3.85
MFC	30,152	0.51	$ 56,878	$ 0.95	$ 8,582	6.63
MFD	35,717	0.60	$ 68,314	$ 1.15	$ 7,059	9.68
LAC	54,855	0.34	$ 111,789	$ 0.69	$ 15,793	7.08
LAD	22,693	0.14	$ 45,691	$ 0.28	$ 11,863	3.85
LEC	52,757	0.33	$ 101,750	$ 0.63	$ 15,793	6.44
LFC	88,876	0.55	$ 171,719	$ 1.06	$ 15,793	10.87
LFD	73,150	0.45	$ 140,775	$ 0.87	$ 11,863	11.87
SXX Average	8,215	0.52	$ 15,683	$ 0.99	$ 4,475	3.50
MXX Average	21,915	0.37	$ 41,917	$ 0.70	$ 7,973	5.26
LXX Average	58,466	0.36	$ 114,345	$ 0.71	$ 14,221	8.04
XAX Average	19,125	0.27	$ 38,276	$ 0.52	$ 8,694	4.40
XEX Average	25,699	0.35	$ 49,399	$ 0.68	$ 9,673	5.11
XFX Average	41,856	0.60	$ 80,312	$ 1.14	$ 8,694	9.24
ALL Average	29,532	0.42	$ 57,315	$ 0.80	$ 8,890	6.45

CTZ07 San Diego-Lindbergh - Mechanical Subcooling						
	Energy Savings	Energy Savings/	TDV Cost	TDV Cost	Measure	Benefit/

	(kWh)	SF (kWh)	Savings ($)	Savings /SF ($)	Cost ($)	Cost Ratio
SAC	6,509	0.41	$ 12,762	$ 0.81	$ 4,645	2.75
SAD	4,006	0.25	$ 8,330	$ 0.53	$ 4,220	1.97
SEC	7,395	0.47	$ 14,124	$ 0.89	$ 4,645	3.04
SFC	11,362	0.72	$ 21,973	$ 1.39	$ 4,645	4.73
SFD	13,094	0.83	$ 25,409	$ 1.60	$ 4,220	6.02
MAC	14,783	0.25	$ 29,049	$ 0.49	$ 8,582	3.38
MAD	12,211	0.21	$ 25,978	$ 0.44	$ 7,059	3.68
MEC	19,416	0.33	$ 37,984	$ 0.64	$ 8,582	4.43
MFC	32,131	0.54	$ 63,517	$ 1.07	$ 8,582	7.40
MFD	40,752	0.68	$ 82,731	$ 1.39	$ 7,059	11.72
LAC	56,998	0.35	$ 119,256	$ 0.74	$ 15,793	7.55
LAD	22,716	0.14	$ 48,966	$ 0.30	$ 11,863	4.13
LEC	55,564	0.34	$ 108,523	$ 0.67	$ 15,793	6.87
LFC	93,715	0.58	$ 183,298	$ 1.13	$ 15,793	11.61
LFD	77,240	0.48	$ 150,698	$ 0.93	$ 11,863	12.70
SXX Average	8,473	0.53	$ 16,520	$ 1.04	$ 4,475	3.69
MXX Average	23,859	0.40	$ 47,852	$ 0.80	$ 7,973	6.00
LXX Average	61,247	0.38	$ 122,148	$ 0.75	$ 14,221	8.59
XAX Average	19,537	0.27	$ 40,723	$ 0.55	$ 8,694	4.68
XEX Average	27,458	0.38	$ 53,543	$ 0.73	$ 9,673	5.54
XFX Average	44,716	0.64	$ 87,938	$ 1.25	$ 8,694	10.12
ALL Average	31,193	0.44	$ 62,173	$ 0.87	$ 8,890	6.99

CTZ08 Fullerton - Mechanical Subcooling

	Energy Savings (kWh)	Energy Savings/ SF (kWh)	TDV Cost Savings ($)	TDV Cost Savings /SF ($)	Measure Cost ($)	Benefit/ Cost Ratio
SAC	7,575	0.48	$ 16,892	$ 1.07	$ 4,645	3.64
SAD	6,002	0.38	$ 17,888	$ 1.13	$ 4,220	4.24
SEC	7,111	0.45	$ 13,652	$ 0.86	$ 4,645	2.94
SFC	11,049	0.70	$ 21,066	$ 1.33	$ 4,645	4.54
SFD	12,550	0.79	$ 24,296	$ 1.53	$ 4,220	5.76
MAC	20,276	0.34	$ 38,812	$ 0.65	$ 8,582	4.52
MAD	14,557	0.24	$ 37,103	$ 0.62	$ 7,059	5.26
MEC	18,899	0.32	$ 36,987	$ 0.62	$ 8,582	4.31
MFC	31,822	0.53	$ 61,986	$ 1.04	$ 8,582	7.22
MFD	39,686	0.67	$ 79,910	$ 1.34	$ 7,059	11.32
LAC	64,368	0.40	$ 144,219	$ 0.89	$ 15,793	9.13
LAD	26,880	0.17	$ 70,583	$ 0.44	$ 11,863	5.95
LEC	55,074	0.34	$ 106,307	$ 0.66	$ 15,793	6.73
LFC	92,879	0.57	$ 178,403	$ 1.10	$ 15,793	11.30
LFD	76,655	0.47	$ 147,174	$ 0.91	$ 11,863	12.41
SXX Average	8,857	0.56	$ 18,759	$ 1.18	$ 4,475	4.19
MXX Average	25,048	0.42	$ 50,960	$ 0.86	$ 7,973	6.39
LXX Average	63,171	0.39	$ 129,337	$ 0.80	$ 14,221	9.09
XAX Average	23,276	0.33	$ 54,249	$ 0.80	$ 8,694	6.24
XEX Average	27,028	0.37	$ 52,315	$ 0.71	$ 9,673	5.41
XFX Average	44,107	0.62	$ 85,473	$ 1.21	$ 8,694	9.83
ALL Average	32,359	0.46	$ 66,352	$ 0.95	$ 8,890	7.46

CTZ10 Riverside - Mechanical Subcooling

	Energy Savings (kWh)	Energy Savings/ SF (kWh)	TDV Cost Savings ($)	TDV Cost Savings /SF ($)	Measure Cost ($)	Benefit/ Cost Ratio
SAC	7,724	0.49	$ 17,078	$ 1.08	$ 4,645	3.68
SAD	6,304	0.40	$ 18,885	$ 1.19	$ 4,220	4.48
SEC	7,194	0.45	$ 13,706	$ 0.86	$ 4,645	2.95
SFC	11,185	0.71	$ 21,306	$ 1.34	$ 4,645	4.59
SFD	12,802	0.81	$ 24,759	$ 1.56	$ 4,220	5.87
MAC	21,442	0.36	$ 46,180	$ 0.78	$ 8,582	5.38
MAD	19,840	0.33	$ 59,841	$ 1.00	$ 7,059	8.48
MEC	18,785	0.32	$ 37,058	$ 0.62	$ 8,582	4.32
MFC	31,824	0.53	$ 62,778	$ 1.05	$ 8,582	7.32
MFD	39,417	0.66	$ 81,227	$ 1.36	$ 7,059	11.51
LAC	74,176	0.46	$ 181,153	$ 1.12	$ 15,793	11.47
LAD	37,523	0.23	$ 118,846	$ 0.73	$ 11,863	10.02
LEC	55,066	0.34	$ 107,117	$ 0.66	$ 15,793	6.78
LFC	92,379	0.57	$ 178,020	$ 1.10	$ 15,793	11.27
LFD	76,380	0.47	$ 146,943	$ 0.91	$ 11,863	12.39
SXX Average	9,042	0.57	$ 19,147	$ 1.21	$ 4,475	4.28
MXX Average	26,262	0.44	$ 57,417	$ 0.96	$ 7,973	7.20
LXX Average	67,105	0.41	$ 146,416	$ 0.90	$ 14,221	10.30
XAX Average	27,835	0.38	$ 73,664	$ 0.98	$ 8,694	8.47
XEX Average	27,015	0.37	$ 52,627	$ 0.72	$ 9,673	5.44
XFX Average	43,998	0.63	$ 85,839	$ 1.22	$ 8,694	9.87
ALL Average	34,136	0.48	$ 74,327	$ 1.03	$ 8,890	8.36

CTZ12 Sacramento - Mechanical Subcooling

	Energy Savings (kWh)	Energy Savings/ SF (kWh)	TDV Cost Savings ($)	TDV Cost Savings /SF ($)	Measure Cost ($)	Benefit/ Cost Ratio
SAC	7,575	0.48	$ 16,892	$ 1.07	$ 4,645	3.64
SAD	6,002	0.38	$ 17,888	$ 1.13	$ 4,220	4.24
SEC	7,111	0.45	$ 13,652	$ 0.86	$ 4,645	2.94
SFC	11,049	0.70	$ 21,066	$ 1.33	$ 4,645	4.54
SFD	12,550	0.79	$ 24,296	$ 1.53	$ 4,220	5.76

MAC	21,266	0.36	$ 45,922	$ 0.77	$ 8,582	5.35
MAD	18,534	0.31	$ 56,121	$ 0.94	$ 7,059	7.95
MEC	18,145	0.30	$ 36,079	$ 0.61	$ 8,582	4.20
MFC	31,189	0.52	$ 61,417	$ 1.03	$ 8,582	7.16
MFD	37,711	0.63	$ 77,116	$ 1.29	$ 7,059	10.92
LAC	70,764	0.44	$ 173,250	$ 1.07	$ 15,793	10.97
LAD	35,105	0.22	$ 110,712	$ 0.68	$ 11,863	9.33
LEC	54,164	0.33	$ 105,532	$ 0.65	$ 15,793	6.68
LFC	90,663	0.56	$ 175,582	$ 1.08	$ 15,793	11.12
LFD	75,201	0.46	$ 145,599	$ 0.90	$ 11,863	12.27
SXX Average	8,857	0.56	$ 18,759	$ 1.18	$ 4,475	4.19
MXX Average	25,369	0.43	$ 55,331	$ 0.93	$ 7,973	6.94
LXX Average	65,179	0.40	$ 142,135	$ 0.88	$ 14,221	9.99
XAX Average	26,541	0.36	$ 70,131	$ 0.94	$ 8,694	8.07
XEX Average	26,473	0.36	$ 51,755	$ 0.71	$ 9,673	5.35
XFX Average	43,061	0.61	$ 84,179	$ 1.19	$ 8,694	9.68
ALL Average	33,135	0.46	$ 72,075	$ 1.00	$ 8,890	8.11

CTZ13 Fresno - Mechanical Subcooling

	Energy Savings (kWh)	Energy Savings/ SF (kWh)	TDV Cost Savings ($)	TDV Cost Savings /SF ($)	Measure Cost ($)	Benefit/ Cost Ratio
SAC	8,311	0.52	$ 18,627	$ 1.18	$ 4,645	4.01
SAD	7,562	0.48	$ 21,706	$ 1.37	$ 4,220	5.14
SEC	7,222	0.46	$ 13,901	$ 0.88	$ 4,645	2.99
SFC	11,149	0.70	$ 21,430	$ 1.35	$ 4,645	4.61
SFD	12,752	0.80	$ 24,875	$ 1.57	$ 4,220	5.89
MAC	22,839	0.38	$ 49,589	$ 0.83	$ 8,582	5.78
MAD	23,817	0.40	$ 68,964	$ 1.16	$ 7,059	9.77
MEC	18,827	0.32	$ 37,441	$ 0.63	$ 8,582	4.36
MFC	31,682	0.53	$ 63,259	$ 1.06	$ 8,582	7.37
MFD	39,135	0.66	$ 81,681	$ 1.37	$ 7,059	11.57
LAC	80,713	0.50	$ 194,956	$ 1.20	$ 15,793	12.34
LAD	45,479	0.28	$ 137,411	$ 0.85	$ 11,863	11.58
LEC	55,170	0.34	$ 108,087	$ 0.67	$ 15,793	6.84
LFC	92,151	0.57	$ 179,337	$ 1.11	$ 15,793	11.36
LFD	76,322	0.47	$ 148,162	$ 0.91	$ 11,863	12.49
SXX Average	9,399	0.59	$ 20,108	$ 1.27	$ 4,475	4.49
MXX Average	27,260	0.46	$ 60,187	$ 1.01	$ 7,973	7.55
LXX Average	69,967	0.43	$ 153,591	$ 0.95	$ 14,221	10.80
XAX Average	31,454	0.43	$ 81,876	$ 1.10	$ 8,694	9.42
XEX Average	27,073	0.37	$ 53,143	$ 0.72	$ 9,673	5.49
XFX Average	43,865	0.62	$ 86,457	$ 1.23	$ 8,694	9.94
ALL Average	35,542	0.49	$ 77,962	$ 1.08	$ 8,890	8.77

CTZ14 Palmdale - Mechanical Subcooling

	Energy Savings (kWh)	Energy Savings/ SF (kWh)	TDV Cost Savings ($)	TDV Cost Savings /SF ($)	Measure Cost ($)	Benefit/ Cost Ratio
SAC	8,239	0.52	$ 18,253	$ 1.15	$ 4,645	3.93
SAD	7,700	0.49	$ 21,422	$ 1.35	$ 4,220	5.08
SEC	7,050	0.44	$ 13,412	$ 0.85	$ 4,645	2.89
SFC	10,975	0.69	$ 20,710	$ 1.31	$ 4,645	4.46
SFD	12,378	0.78	$ 23,718	$ 1.50	$ 4,220	5.62
MAC	22,421	0.38	$ 47,907	$ 0.80	$ 8,582	5.58
MAD	23,996	0.40	$ 67,682	$ 1.14	$ 7,059	9.59
MEC	17,982	0.30	$ 35,278	$ 0.59	$ 8,582	4.11
MFC	30,875	0.52	$ 59,761	$ 1.00	$ 8,582	6.96
MFD	36,629	0.62	$ 73,538	$ 1.23	$ 7,059	10.42
LAC	80,738	0.50	$ 192,571	$ 1.19	$ 15,793	12.19
LAD	45,738	0.28	$ 133,718	$ 0.82	$ 11,863	11.27
LEC	53,985	0.33	$ 104,500	$ 0.64	$ 15,793	6.62
LFC	90,286	0.56	$ 173,998	$ 1.07	$ 15,793	11.02
LFD	74,860	0.46	$ 144,059	$ 0.89	$ 11,863	12.14
SXX Average	9,268	0.58	$ 19,503	$ 1.23	$ 4,475	4.36
MXX Average	26,381	0.44	$ 56,833	$ 0.95	$ 7,973	7.13
LXX Average	69,121	0.43	$ 149,769	$ 0.92	$ 14,221	10.53
XAX Average	31,472	0.43	$ 80,259	$ 1.08	$ 8,694	9.23
XEX Average	26,339	0.36	$ 51,063	$ 0.69	$ 9,673	5.28
XFX Average	42,667	0.60	$ 82,631	$ 1.17	$ 8,694	9.50
ALL Average	34,923	0.48	$ 75,368	$ 1.04	$ 8,890	8.48

CTZ15 Palm Springs - Mechanical Subcooling

	Energy Savings (kWh)	Energy Savings/ SF (kWh)	TDV Cost Savings ($)	TDV Cost Savings /SF ($)	Measure Cost ($)	Benefit/ Cost Ratio
SAC	11,443	0.72	$ 26,227	$ 1.65	$ 4,645	5.65
SAD	13,824	0.87	$ 37,103	$ 2.34	$ 4,220	8.79
SEC	7,653	0.48	$ 15,121	$ 0.95	$ 4,645	3.26
SFC	11,638	0.73	$ 22,837	$ 1.44	$ 4,645	4.92
SFD	13,595	0.86	$ 27,358	$ 1.73	$ 4,220	6.48
MAC	28,508	0.48	$ 66,570	$ 1.12	$ 8,582	7.76
MAD	45,203	0.76	$ 121,748	$ 2.04	$ 7,059	17.25
MEC	20,984	0.35	$ 42,416	$ 0.71	$ 8,582	4.94
MFC	34,858	0.59	$ 71,687	$ 1.20	$ 8,582	8.35
MFD	46,162	0.78	$ 100,424	$ 1.69	$ 7,059	14.23
LAC	114,292	0.71	$ 259,844	$ 1.60	$ 15,793	16.45

LAD	88,620	0.55	$ 247,358	$ 1.53	$ 11,863	20.85
LEC	59,231	0.37	$ 117,974	$ 0.73	$ 15,793	7.47
LFC	98,320	0.61	$ 193,363	$ 1.19	$ 15,793	12.24
LFD	81,968	0.51	$ 165,036	$ 1.02	$ 11,863	13.91
SXX Average	11,631	0.73	$ 25,729	$ 1.62	$ 4,475	5.75
MXX Average	35,143	0.59	$ 80,569	$ 1.35	$ 7,973	10.11
LXX Average	88,486	0.55	$ 196,715	$ 1.21	$ 14,221	13.83
XAX Average	50,315	0.68	$ 126,475	$ 1.71	$ 8,694	14.55
XEX Average	29,289	0.40	$ 58,504	$ 0.80	$ 9,673	6.05
XFX Average	47,757	0.68	$ 96,784	$ 1.38	$ 8,694	11.13
ALL Average	45,087	0.62	$ 101,004	$ 1.40	$ 8,890	11.36

Display Case Lighting Control

CTZ01 Arcata - Display Case Lighting Control						
	Energy Savings (kWh)	Energy Savings/ SF (kWh)	TDV Cost Savings ($)	TDV Cost Savings /SF ($)	Measure Cost ($)	Benefit/ Cost Ratio
SAC	48,247	3.04	$ 67,201	$ 4.24	$ 5,588	12.03
SAD	48,173	3.04	$ 67,175	$ 4.24	$ 5,588	12.02
SEC	47,749	3.01	$ 66,463	$ 4.19	$ 5,588	11.89
SFC	49,505	3.12	$ 69,186	$ 4.37	$ 5,588	12.38
SFD	49,713	3.14	$ 69,471	$ 4.38	$ 5,588	12.43
MAC	145,011	2.43	$ 215,710	$ 3.62	$ 11,321	19.05
MAD	144,551	2.43	$ 214,998	$ 3.61	$ 11,321	18.99
MEC	143,703	2.41	$ 214,162	$ 3.60	$ 11,321	18.92
MFC	151,100	2.54	$ 225,625	$ 3.79	$ 11,321	19.93
MFD	151,691	2.55	$ 226,524	$ 3.80	$ 11,321	20.01
LAC	166,882	1.03	$ 255,305	$ 1.57	$ 12,659	20.17
LAD	165,787	1.02	$ 253,151	$ 1.56	$ 12,659	20.00
LEC	164,603	1.02	$ 251,576	$ 1.55	$ 12,659	19.87
LFC	173,941	1.07	$ 266,892	$ 1.65	$ 12,659	21.08
LFD	175,738	1.08	$ 270,025	$ 1.67	$ 12,659	21.33
SXX Average	48,677	3.07	$ 67,899	$ 4.28	$ 5,588	12.15
MXX Average	147,211	2.47	$ 219,404	$ 3.68	$ 11,321	19.38
LXX Average	169,390	1.04	$ 259,390	$ 1.60	$ 12,659	20.49
XAX Average	119,775	2.17	$ 178,924	$ 3.14	$ 9,856	18.15
XEX Average	118,685	2.15	$ 177,400	$ 3.11	$ 9,856	18.00
XFX Average	125,281	2.25	$ 187,954	$ 3.28	$ 9,856	19.07
ALL Average	121,760	2.20	$ 182,231	$ 3.19	$ 9,856	18.49

CTZ03 Oakland - Display Case Lighting Control						
	Energy Savings (kWh)	Energy Savings/ SF (kWh)	TDV Cost Savings ($)	TDV Cost Savings /SF ($)	Measure Cost ($)	Benefit/ Cost Ratio
SAC	48,478	3.06	$ 67,148	$ 4.24	$ 5,588	12.02
SAD	48,387	3.05	$ 66,997	$ 4.23	$ 5,588	11.99
SEC	47,903	3.02	$ 66,267	$ 4.18	$ 5,588	11.86
SFC	49,770	3.14	$ 69,142	$ 4.36	$ 5,588	12.37
SFD	50,005	3.16	$ 69,435	$ 4.38	$ 5,588	12.42
MAC	144,766	2.43	$ 210,976	$ 3.54	$ 11,321	18.64
MAD	144,416	2.42	$ 210,335	$ 3.53	$ 11,321	18.58
MEC	145,146	2.44	$ 211,901	$ 3.56	$ 11,321	18.72
MFC	153,060	2.57	$ 224,121	$ 3.76	$ 11,321	19.80
MFD	154,059	2.59	$ 225,607	$ 3.79	$ 11,321	19.93
LAC	168,325	1.04	$ 256,756	$ 1.58	$ 12,659	20.28
LAD	167,104	1.03	$ 253,561	$ 1.56	$ 12,659	20.03
LEC	165,697	1.02	$ 252,724	$ 1.56	$ 12,659	19.96
LFC	174,575	1.08	$ 267,106	$ 1.65	$ 12,659	21.10
LFD	176,197	1.09	$ 269,740	$ 1.66	$ 12,659	21.31
SXX Average	48,909	3.09	$ 67,798	$ 4.28	$ 5,588	12.13
MXX Average	148,289	2.49	$ 216,588	$ 3.64	$ 11,321	19.13
LXX Average	170,380	1.05	$ 259,977	$ 1.60	$ 12,659	20.54
XAX Average	120,246	2.17	$ 177,629	$ 3.11	$ 9,856	18.02
XEX Average	119,582	2.16	$ 176,964	$ 3.10	$ 9,856	17.95
XFX Average	126,278	2.27	$ 187,525	$ 3.27	$ 9,856	19.03
ALL Average	122,526	2.21	$ 181,454	$ 3.17	$ 9,856	18.41

CTZ05 Santa Maria - Display Case Lighting Control						
	Energy Savings (kWh)	Energy Savings/ SF (kWh)	TDV Cost Savings ($)	TDV Cost Savings /SF ($)	Measure Cost ($)	Benefit/ Cost Ratio
SAC	48,363	3.05	$ 67,371	$ 4.25	$ 5,588	12.06
SAD	48,282	3.05	$ 67,237	$ 4.24	$ 5,588	12.03
SEC	47,855	3.02	$ 66,632	$ 4.20	$ 5,588	11.92
SFC	49,597	3.13	$ 69,320	$ 4.37	$ 5,588	12.40
SFD	49,808	3.14	$ 69,604	$ 4.39	$ 5,588	12.46
MAC	144,566	2.43	$ 212,293	$ 3.56	$ 11,321	18.75
MAD	144,238	2.42	$ 211,661	$ 3.55	$ 11,321	18.70
MEC	143,824	2.41	$ 211,528	$ 3.55	$ 11,321	18.68
MFC	151,503	2.54	$ 223,515	$ 3.75	$ 11,321	19.74
MFD	152,336	2.56	$ 224,735	$ 3.77	$ 11,321	19.85
LAC	167,808	1.04	$ 259,328	$ 1.60	$ 12,659	20.49
LAD	166,453	1.03	$ 255,172	$ 1.57	$ 12,659	20.16
LEC	165,249	1.02	$ 254,789	$ 1.57	$ 12,659	20.13
LFC	174,331	1.08	$ 269,438	$ 1.66	$ 12,659	21.28
LFD	176,028	1.09	$ 272,446	$ 1.68	$ 12,659	21.52
SXX Average	48,781	3.08	$ 68,033	$ 4.29	$ 5,588	12.17
MXX Average	147,293	2.47	$ 216,746	$ 3.64	$ 11,321	19.15
LXX Average	169,974	1.05	$ 262,234	$ 1.62	$ 12,659	20.72
XAX Average	119,952	2.17	$ 178,844	$ 3.13	$ 9,856	18.15
XEX Average	118,976	2.15	$ 177,649	$ 3.11	$ 9,856	18.02
XFX Average	125,601	2.26	$ 188,176	$ 3.27	$ 9,856	19.09

CTZ07 San Diego-Lindbergh - Display Case Lighting Control						
	Energy Savings (kWh)	Energy Savings/ SF (kWh)	TDV Cost Savings ($)	TDV Cost Savings /SF ($)	Measure Cost ($)	Benefit/ Cost Ratio

SAC	48,955	3.09	$ 68,688	$ 4.33	$ 5,588	12.29
SAD	48,854	3.08	$ 68,474	$ 4.32	$ 5,588	12.25
SEC	49,380	3.12	$ 69,311	$ 4.37	$ 5,588	12.40
SFC	51,078	3.22	$ 71,945	$ 4.54	$ 5,588	12.87
SFD	51,449	3.25	$ 72,506	$ 4.57	$ 5,588	12.97
MAC	145,539	2.44	$ 214,269	$ 3.60	$ 11,321	18.93
MAD	145,514	2.44	$ 213,984	$ 3.59	$ 11,321	18.90
MEC	150,777	2.53	$ 222,341	$ 3.73	$ 11,321	19.64
MFC	157,929	2.65	$ 233,990	$ 3.93	$ 11,321	20.67
MFD	159,203	2.67	$ 236,108	$ 3.96	$ 11,321	20.86
LAC	172,238	1.06	$ 269,714	$ 1.66	$ 12,659	21.31
LAD	170,384	1.05	$ 264,846	$ 1.63	$ 12,659	20.92
LEC	171,257	1.06	$ 268,138	$ 1.65	$ 12,659	21.18
LFC	178,842	1.10	$ 280,803	$ 1.73	$ 12,659	22.18
LFD	179,638	1.11	$ 282,111	$ 1.74	$ 12,659	22.29
SXX Average	49,943	3.15	$ 70,185	$ 4.43	$ 5,588	12.56
MXX Average	151,792	2.55	$ 224,138	$ 3.76	$ 11,321	19.80
LXX Average	174,472	1.08	$ 273,122	$ 1.68	$ 12,659	21.58
XAX Average	121,914	2.20	$ 183,329	$ 3.19	$ 9,856	18.60
XEX Average	123,805	2.23	$ 186,597	$ 3.25	$ 9,856	18.93
XFX Average	129,690	2.33	$ 196,244	$ 3.41	$ 9,856	19.91
ALL Average	125,402	2.26	$ 189,148	$ 3.29	$ 9,856	19.19

CTZ08 Fullerton - Display Case Lighting Control

	Energy Savings (kWh)	Energy Savings/ SF (kWh)	TDV Cost Savings ($)	TDV Cost Savings /SF ($)	Measure Cost ($)	Benefit/ Cost Ratio
SAC	48,999	3.09	$ 68,127	$ 4.30	$ 5,588	12.19
SAD	48,730	3.07	$ 67,833	$ 4.28	$ 5,588	12.14
SEC	48,100	3.03	$ 66,854	$ 4.22	$ 5,588	11.96
SFC	50,099	3.16	$ 69,889	$ 4.41	$ 5,588	12.51
SFD	50,275	3.17	$ 70,147	$ 4.43	$ 5,588	12.55
MAC	147,978	2.48	$ 213,414	$ 3.58	$ 11,321	18.85
MAD	144,180	2.42	$ 207,541	$ 3.48	$ 11,321	18.33
MEC	150,085	2.52	$ 216,511	$ 3.64	$ 11,321	19.12
MFC	155,247	2.61	$ 224,806	$ 3.77	$ 11,321	19.86
MFD	155,247	2.61	$ 224,930	$ 3.78	$ 11,321	19.87
LAC	173,247	1.07	$ 266,723	$ 1.65	$ 12,659	21.07
LAD	169,911	1.05	$ 259,737	$ 1.60	$ 12,659	20.52
LEC	169,042	1.04	$ 258,918	$ 1.60	$ 12,659	20.45
LFC	177,900	1.10	$ 273,727	$ 1.69	$ 12,659	21.62
LFD	179,855	1.11	$ 277,181	$ 1.71	$ 12,659	21.90
SXX Average	49,241	3.11	$ 68,570	$ 4.33	$ 5,588	12.27
MXX Average	150,547	2.53	$ 217,441	$ 3.65	$ 11,321	19.21
LXX Average	173,991	1.07	$ 267,257	$ 1.65	$ 12,659	21.11
XAX Average	122,174	2.20	$ 180,563	$ 3.15	$ 9,856	18.32
XEX Average	122,409	2.20	$ 180,761	$ 3.15	$ 9,856	18.34
XFX Average	128,104	2.29	$ 190,113	$ 3.30	$ 9,856	19.29
ALL Average	124,593	2.24	$ 184,423	$ 3.21	$ 9,856	18.71

CTZ10 Riverside - Display Case Lighting Control

	Energy Savings (kWh)	Energy Savings/ SF (kWh)	TDV Cost Savings ($)	TDV Cost Savings /SF ($)	Measure Cost ($)	Benefit/ Cost Ratio
SAC	49,356	3.11	$ 67,504	$ 4.26	$ 5,588	12.08
SAD	48,999	3.09	$ 67,041	$ 4.23	$ 5,588	12.00
SEC	48,665	3.07	$ 66,454	$ 4.19	$ 5,588	11.89
SFC	50,657	3.20	$ 69,462	$ 4.38	$ 5,588	12.43
SFD	50,892	3.21	$ 69,782	$ 4.40	$ 5,588	12.49
MAC	148,108	2.49	$ 211,706	$ 3.55	$ 11,321	18.70
MAD	144,322	2.42	$ 206,090	$ 3.46	$ 11,321	18.20
MEC	148,244	2.49	$ 211,768	$ 3.56	$ 11,321	18.71
MFC	154,181	2.59	$ 221,139	$ 3.71	$ 11,321	19.53
MFD	154,110	2.59	$ 221,113	$ 3.71	$ 11,321	19.53
LAC	174,292	1.08	$ 264,961	$ 1.63	$ 12,659	20.93
LAD	170,295	1.05	$ 257,753	$ 1.59	$ 12,659	20.36
LEC	168,943	1.04	$ 255,198	$ 1.57	$ 12,659	20.16
LFC	177,961	1.10	$ 270,070	$ 1.67	$ 12,659	21.33
LFD	179,916	1.11	$ 273,256	$ 1.69	$ 12,659	21.59
SXX Average	49,714	3.14	$ 68,049	$ 4.29	$ 5,588	12.18
MXX Average	149,793	2.52	$ 214,363	$ 3.60	$ 11,321	18.94
LXX Average	174,281	1.08	$ 264,247	$ 1.63	$ 12,659	20.87
XAX Average	122,562	2.21	$ 179,176	$ 3.12	$ 9,856	18.18
XEX Average	121,951	2.20	$ 177,807	$ 3.11	$ 9,856	18.04
XFX Average	127,953	2.30	$ 187,470	$ 3.26	$ 9,856	19.02
ALL Average	124,596	2.24	$ 182,220	$ 3.17	$ 9,856	18.49

CTZ12 Sacramento - Display Case Lighting Control

	Energy Savings (kWh)	Energy Savings/ SF (kWh)	TDV Cost Savings ($)	TDV Cost Savings /SF ($)	Measure Cost ($)	Benefit/ Cost Ratio
SAC	48,999	3.09	$ 68,127	$ 4.30	$ 5,588	12.19
SAD	48,730	3.07	$ 67,833	$ 4.28	$ 5,588	12.14
SEC	48,100	3.03	$ 66,854	$ 4.22	$ 5,588	11.96
SFC	50,099	3.16	$ 69,889	$ 4.41	$ 5,588	12.51
SFD	50,275	3.17	$ 70,147	$ 4.43	$ 5,588	12.55

MAC	147,757	2.48	$ 216,974	$ 3.64	$ 11,321	19.17
MAD	144,098	2.42	$ 211,269	$ 3.55	$ 11,321	18.66
MEC	145,982	2.45	$ 214,011	$ 3.59	$ 11,321	18.90
MFC	153,142	2.57	$ 225,100	$ 3.78	$ 11,321	19.88
MFD	152,738	2.56	$ 224,566	$ 3.77	$ 11,321	19.84
LAC	172,356	1.06	$ 265,753	$ 1.64	$ 12,659	20.99
LAD	168,605	1.04	$ 258,269	$ 1.59	$ 12,659	20.40
LEC	167,295	1.03	$ 256,418	$ 1.58	$ 12,659	20.26
LFC	176,435	1.09	$ 271,414	$ 1.67	$ 12,659	21.44
LFD	178,331	1.10	$ 274,724	$ 1.69	$ 12,659	21.70
SXX Average	49,241	3.11	$ 68,570	$ 4.33	$ 5,588	12.27
MXX Average	148,743	2.50	$ 218,384	$ 3.67	$ 11,321	19.29
LXX Average	172,604	1.06	$ 265,315	$ 1.64	$ 12,659	20.96
XAX Average	121,758	2.19	$ 181,371	$ 3.17	$ 9,856	18.40
XEX Average	120,459	2.17	$ 179,094	$ 3.13	$ 9,856	18.17
XFX Average	126,837	2.28	$ 189,307	$ 3.29	$ 9,856	19.21
ALL Average	123,529	2.22	$ 184,090	$ 3.21	$ 9,856	18.68

CTZ13 Fresno - Display Case Lighting Control

	Energy Savings (kWh)	Energy Savings/ SF (kWh)	TDV Cost Savings ($)	TDV Cost Savings /SF ($)	Measure Cost ($)	Benefit/ Cost Ratio
SAC	50,266	3.17	$ 70,975	$ 4.48	$ 5,588	12.70
SAD	49,722	3.14	$ 70,218	$ 4.43	$ 5,588	12.57
SEC	49,331	3.11	$ 69,587	$ 4.39	$ 5,588	12.45
SFC	51,228	3.23	$ 72,479	$ 4.57	$ 5,588	12.97
SFD	51,454	3.25	$ 72,773	$ 4.59	$ 5,588	13.02
MAC	149,672	2.51	$ 220,045	$ 3.69	$ 11,321	19.44
MAD	145,866	2.45	$ 214,304	$ 3.60	$ 11,321	18.93
MEC	148,826	2.50	$ 218,532	$ 3.67	$ 11,321	19.30
MFC	154,841	2.60	$ 228,330	$ 3.83	$ 11,321	20.17
MFD	154,712	2.60	$ 228,188	$ 3.83	$ 11,321	20.16
LAC	175,674	1.08	$ 271,939	$ 1.68	$ 12,659	21.48
LAD	170,351	1.05	$ 262,104	$ 1.62	$ 12,659	20.71
LEC	168,948	1.04	$ 259,826	$ 1.60	$ 12,659	20.53
LFC	177,667	1.10	$ 274,422	$ 1.69	$ 12,659	21.68
LFD	179,425	1.11	$ 277,456	$ 1.71	$ 12,659	21.92
SXX Average	50,400	3.18	$ 71,206	$ 4.49	$ 5,588	12.74
MXX Average	150,783	2.53	$ 221,880	$ 3.73	$ 11,321	19.60
LXX Average	174,413	1.08	$ 269,149	$ 1.66	$ 12,659	21.26
XAX Average	123,592	2.23	$ 184,931	$ 3.25	$ 9,856	18.76
XEX Average	122,368	2.22	$ 182,648	$ 3.22	$ 9,856	18.53
XFX Average	128,221	2.31	$ 192,275	$ 3.37	$ 9,856	19.51
ALL Average	125,199	2.26	$ 187,412	$ 3.29	$ 9,856	19.01

CTZ14 Palmdale - Display Case Lighting Control

	Energy Savings (kWh)	Energy Savings/ SF (kWh)	TDV Cost Savings ($)	TDV Cost Savings /SF ($)	Measure Cost ($)	Benefit/ Cost Ratio
SAC	50,243	3.17	$ 69,248	$ 4.37	$ 5,588	12.39
SAD	49,825	3.14	$ 68,679	$ 4.33	$ 5,588	12.29
SEC	48,640	3.07	$ 66,863	$ 4.22	$ 5,588	11.96
SFC	50,606	3.19	$ 69,747	$ 4.40	$ 5,588	12.48
SFD	50,755	3.20	$ 69,969	$ 4.41	$ 5,588	12.52
MAC	149,311	2.51	$ 215,693	$ 3.62	$ 11,321	19.05
MAD	145,589	2.44	$ 210,255	$ 3.53	$ 11,321	18.57
MEC	145,817	2.45	$ 210,460	$ 3.53	$ 11,321	18.59
MFC	152,370	2.56	$ 220,498	$ 3.70	$ 11,321	19.48
MFD	152,027	2.55	$ 220,009	$ 3.69	$ 11,321	19.43
LAC	175,750	1.08	$ 267,302	$ 1.65	$ 12,659	21.12
LAD	170,259	1.05	$ 257,388	$ 1.59	$ 12,659	20.33
LEC	167,262	1.03	$ 252,715	$ 1.56	$ 12,659	19.96
LFC	176,395	1.09	$ 267,275	$ 1.65	$ 12,659	21.11
LFD	178,341	1.10	$ 270,524	$ 1.67	$ 12,659	21.37
SXX Average	50,014	3.16	$ 68,901	$ 4.35	$ 5,588	12.33
MXX Average	149,023	2.50	$ 215,383	$ 3.62	$ 11,321	19.03
LXX Average	173,601	1.07	$ 263,041	$ 1.62	$ 12,659	20.78
XAX Average	123,496	2.23	$ 181,427	$ 3.18	$ 9,856	18.41
XEX Average	120,573	2.18	$ 176,679	$ 3.10	$ 9,856	17.93
XFX Average	126,749	2.28	$ 186,337	$ 3.25	$ 9,856	18.91
ALL Average	124,213	2.24	$ 182,442	$ 3.20	$ 9,856	18.51

CTZ15 Palm Springs - Display Case Lighting Control

	Energy Savings (kWh)	Energy Savings/ SF (kWh)	TDV Cost Savings ($)	TDV Cost Savings /SF ($)	Measure Cost ($)	Benefit/ Cost Ratio
SAC	51,776	3.27	$ 72,755	$ 4.59	$ 5,588	13.02
SAD	51,071	3.22	$ 71,812	$ 4.53	$ 5,588	12.85
SEC	50,040	3.16	$ 70,094	$ 4.42	$ 5,588	12.54
SFC	51,759	3.27	$ 72,728	$ 4.59	$ 5,588	13.01
SFD	52,092	3.29	$ 73,262	$ 4.62	$ 5,588	13.11
MAC	153,301	2.57	$ 225,171	$ 3.78	$ 11,321	19.89
MAD	151,698	2.55	$ 223,035	$ 3.74	$ 11,321	19.70
MEC	151,568	2.54	$ 221,602	$ 3.72	$ 11,321	19.57

MFC	158,126	2.65	$ 232,255	$ 3.90	$ 11,321	20.52
MFD	158,632	2.66	$ 233,198	$ 3.92	$ 11,321	20.60
LAC	185,047	1.14	$ 285,101	$ 1.76	$ 12,659	22.52
LAD	176,034	1.09	$ 271,280	$ 1.67	$ 12,659	21.43
LEC	172,611	1.06	$ 264,276	$ 1.63	$ 12,659	20.88
LFC	181,127	1.12	$ 278,551	$ 1.72	$ 12,659	22.00
LFD	182,818	1.13	$ 281,702	$ 1.74	$ 12,659	22.25
SXX Average	51,348	3.24	$ 72,130	$ 4.55	$ 5,588	12.91
MXX Average	154,665	2.60	$ 227,052	$ 3.81	$ 11,321	20.06
LXX Average	179,527	1.11	$ 276,182	$ 1.70	$ 12,659	21.82
XAX Average	128,155	2.31	$ 191,526	$ 3.35	$ 9,856	19.43
XEX Average	124,740	2.26	$ 185,324	$ 3.26	$ 9,856	18.80
XFX Average	130,759	2.35	$ 195,283	$ 3.41	$ 9,856	19.81
ALL Average	128,513	2.31	$ 191,788	$ 3.36	$ 9,856	19.46

Refrigeration Heat Recovery

CTZ01 Arcata - Refrigeration Heat Recovery													
	Energy Savings (kWh)	Energy Savings / SF (kWh)	Natural Gas Savings (Therms)	Natural Gas Savings /SF (Therms)	TDV Electric Cost Savings ($)	TDV Gas Cost Savings ($)	TDV Total Cost Savings ($)	TDV Total Cost Savings /SF ($)	Measure Cost ($)	Refrigerant Cost Savings Range ($)		Net Savings Range ($)	
SAC	-26,406	-1.67	13,595	0.86	-$59,035	$276,545	$217,510	$13.72	$20,926	-$12,234	-$18,351	$184,351	$178,234
SAD	-30,552	-1.93	13,585	0.86	-$69,082	$276,313	$207,230	$13.08	$23,202	-$5,182	-$10,365	$178,846	$173,664
SEC	-17,954	-1.13	13,594	0.86	-$38,918	$276,521	$237,603	$14.99	$20,926	-$12,574	-$18,860	$204,103	$197,816
SFC	-7,248	-0.46	13,620	0.86	-$14,898	$277,059	$262,161	$16.54	$20,926	-$10,761	-$16,142	$230,474	$225,093
SFD	-8,995	-0.57	13,614	0.86	-$18,165	$276,937	$258,771	$16.33	$21,000	-$4,814	-$9,629	$232,957	$228,143
MAC	-88,277	-1.48	46,458	0.78	-$194,546	$939,757	$745,212	$12.51	$66,536	-$41,458	-$62,187	$637,218	$616,489
MAD	-106,993	-1.80	46,458	0.78	-$237,768	$939,757	$701,989	$11.79	$75,068	-$16,029	-$32,057	$610,893	$594,864
MEC	-45,675	-0.77	46,469	0.78	-$93,102	$939,990	$846,887	$14.22	$66,536	-$43,327	-$64,990	$737,025	$715,361
MFC	2,363	0.04	46,490	0.78	$13,393	$940,381	$953,774	$16.01	$66,536	-$33,926	-$50,889	$853,312	$836,349
MFD	84,118	1.41	46,501	0.78	$187,911	$940,626	$1,128,537	$18.95	$75,068	-$14,160	-$28,320	$1,039,309	$1,025,149
LAC	-147,172	-0.91	71,243	0.44	-$338,018	$1,441,831	$1,103,813	$6.81	$83,600	-$65,101	-$97,651	$955,113	$922,562
LAD	-150,070	-0.93	70,919	0.44	-$346,337	$1,435,236	$1,088,899	$6.72	$95,545	-$26,807	-$53,613	$966,547	$939,740
LEC	-120,903	-0.75	71,664	0.44	-$270,062	$1,450,116	$1,180,054	$7.28	$83,600	-$67,398	-$101,097	$1,029,056	$995,357
LFC	-66,500	-0.41	72,907	0.45	-$146,283	$1,475,434	$1,329,152	$8.20	$83,600	-$55,911	-$83,866	$1,189,641	$1,161,685
LFD	-70,730	-0.44	72,568	0.45	-$153,698	$1,468,386	$1,314,688	$8.11	$95,545	-$24,509	-$49,019	$1,194,633	$1,170,124
SXX Average	-18,231	-1.15	13,602	0.86	-$40,020	$276,675	$236,655	$14.93	$21,396				
MXX Average	-30,893	-0.52	46,475	0.78	-$64,822	$940,102	$875,280	$14.70	$69,949				
LXX Average	-111,075	-0.69	71,860	0.44	-$250,880	$1,454,201	$1,203,321	$7.42	$88,378				
XAX Average	-91,578	-1.45	43,710	0.69	-$207,464	$884,907	$677,442	$10.77	$60,813				
XEX Average	-61,511	-0.88	43,909	0.69	-$134,027	$888,875	$754,848	$12.16	$57,021				
XFX Average	-11,165	-0.07	44,283	0.70	-$21,957	$896,471	$874,514	$14.02	$60,446				
ALL Average	-53,400	-0.78	43,977	0.69	-$118,574	$890,326	$771,752	$12.35	$59,908				

CTZ03 Oakland - Refrigeration Heat Recovery													
	Energy Savings (kWh)	Energy Savings / SF (kWh)	Natural Gas Savings (Therms)	Natural Gas Savings /SF (Therms)	TDV Electric Cost Savings ($)	TDV Gas Cost Savings ($)	TDV Total Cost Savings ($)	TDV Total Cost Savings /SF ($)	Measure Cost ($)	Refrigerant Cost Savings Range ($)		Net Savings Range ($)	
SAC	-23,189	-1.46	9,717	0.61	-$49,601	$201,483	$151,882	$9.58	$20,926	-$12,234	-$18,351	$118,722	$112,605
SAD	-27,151	-1.71	9,715	0.61	-$57,641	$201,446	$143,805	$9.07	$23,202	-$5,182	-$10,365	$115,421	$110,238
SEC	-16,067	-1.01	9,718	0.61	-$34,859	$201,508	$166,649	$10.51	$20,926	-$12,574	-$18,860	$133,149	$126,862
SFC	-6,729	-0.42	9,729	0.61	-$15,857	$201,740	$185,883	$11.73	$20,926	-$10,761	-$16,142	$154,196	$148,815
SFD	-7,571	-0.48	9,729	0.61	-$17,251	$201,728	$184,477	$11.64	$21,000	-$4,814	-$9,629	$158,662	$153,848
MAC	-73,900	-1.24	35,273	0.59	-$154,245	$722,500	$568,256	$9.54	$66,536	-$41,458	-$62,187	$460,262	$439,533
MAD	-90,381	-1.52	35,273	0.59	-$187,253	$722,500	$535,248	$8.99	$75,068	-$16,029	-$32,057	$444,151	$428,123
MEC	-36,652	-0.62	35,286	0.59	-$76,721	$722,745	$646,024	$10.85	$66,536	-$43,327	-$64,990	$536,161	$514,498
MFC	2,213	0.04	35,303	0.59	$3,769	$723,112	$726,881	$12.20	$66,536	-$33,926	-$50,889	$626,419	$609,456
MFD	62,652	1.05	35,311	0.59	$126,746	$723,284	$850,029	$14.27	$75,068	-$14,160	-$28,320	$760,801	$746,642
LAC	-135,990	-0.84	49,016	0.30	-$291,974	$1,019,800	$727,825	$4.49	$83,600	-$65,101	-$97,651	$579,125	$546,574
LAD	-139,432	-0.86	48,857	0.30	-$298,018	$1,016,324	$718,306	$4.43	$95,545	-$26,807	-$53,613	$595,954	$569,148
LEC	-109,720	-0.68	49,179	0.30	-$236,932	$1,023,300	$786,368	$4.85	$83,600	-$67,398	-$101,097	$635,370	$601,671
LFC	-60,881	-0.38	49,805	0.31	-$137,953	$1,037,103	$899,150	$5.55	$83,600	-$55,911	-$83,866	$759,639	$731,684
LFD	-62,703	-0.39	49,640	0.31	-	$1,033,45	$893,31	$5.51	$95,545	-	-$49,019	$773,26	$748,75

					$140,138	6	8			$24,509		4	4
SXX Average	-16,141	-1.02	9,722	0.61	-$35,042	$201,581	$166,539	$10.51	$21,396				
MXX Average	-27,214	-0.46	35,289	0.59	-$57,541	$722,828	$665,288	$11.17	$69,949				
LXX Average	-101,745	-0.63	49,299	0.30	-$221,003	$1,025,997	$804,993	$4.97	$88,378				
XAX Average	-81,674	-1.27	31,309	0.50	-$173,122	$647,342	$474,220	$7.68	$60,813				
XEX Average	-54,146	-0.77	31,394	0.50	-$116,171	$649,184	$533,014	$8.74	$57,021				
XFX Average	-12,170	-0.10	31,586	0.50	-$30,114	$653,404	$623,290	$10.15	$60,446				
ALL Average	-48,367	-0.70	31,436	0.50	-$104,529	$650,135	$545,607	$8.88	$59,908				

CTZ05 Santa Maria - Refrigeration Heat Recovery

	Energy Savings (kWh)	Energy Savings / SF (kWh)	Natural Gas Savings (Therms)	Natural Gas Savings /SF (Therms)	TDV Electric Cost Savings ($)	TDV Gas Cost Savings ($)	TDV Total Cost Savings ($)	TDV Total Cost Savings /SF ($)	Measure Cost ($)	Refrigerant Cost Savings Range ($)		Net Savings Range ($)	
SAC	-23,293	-1.47	10,112	0.64	-$50,058	$207,565	$157,507	$9.94	$20,926	-$12,234	-$18,351	$124,347	$118,230
SAD	-27,154	-1.71	10,109	0.64	-$58,187	$207,504	$149,316	$9.42	$23,202	-$5,182	-$10,365	$120,932	$115,749
SEC	-16,804	-1.06	10,113	0.64	-$36,465	$207,577	$171,112	$10.80	$20,926	-$12,574	-$18,860	$137,613	$131,326
SFC	-7,228	-0.46	10,125	0.64	-$16,604	$207,810	$191,205	$12.06	$20,926	-$10,761	-$16,142	$159,518	$154,137
SFD	-8,304	-0.52	10,124	0.64	-$18,433	$207,785	$189,352	$11.95	$21,000	-$4,814	-$9,629	$163,538	$158,723
MAC	-74,595	-1.25	36,645	0.62	-$155,326	$745,163	$589,837	$9.90	$66,536	-$41,458	-$62,187	$481,843	$461,114
MAD	-90,885	-1.53	36,644	0.62	-$188,591	$745,163	$556,573	$9.35	$75,068	-$16,029	-$32,057	$465,476	$449,448
MEC	-39,874	-0.67	36,655	0.62	-$81,639	$745,371	$663,733	$11.14	$66,536	-$43,327	-$64,990	$553,870	$532,207
MFC	758	0.01	36,673	0.62	$3,535	$745,739	$749,274	$12.58	$66,536	-$33,926	-$50,889	$648,812	$631,849
MFD	68,507	1.15	36,682	0.62	$141,477	$745,922	$887,399	$14.90	$75,068	-$14,160	-$28,320	$798,171	$784,011
LAC	-135,427	-0.84	51,937	0.32	-$294,060	$1,064,269	$770,210	$4.75	$83,600	-$65,101	-$97,651	$621,509	$588,959
LAD	-138,730	-0.86	51,752	0.32	-$300,182	$1,060,280	$760,098	$4.69	$95,545	-$26,807	-$53,613	$637,746	$610,940
LEC	-113,666	-0.70	52,099	0.32	-$246,622	$1,067,671	$821,049	$5.06	$83,600	-$67,398	-$101,097	$670,051	$636,352
LFC	-64,295	-0.40	52,769	0.33	-$144,733	$1,081,891	$937,158	$5.78	$83,600	-$55,911	-$83,866	$797,647	$769,692
LFD	-66,498	-0.41	52,590	0.32	-$147,599	$1,078,011	$930,413	$5.74	$95,545	-$24,509	-$49,019	$810,359	$785,849
SXX Average	-16,557	-1.04	10,117	0.64	-$35,950	$207,648	$171,699	$10.83	$21,396				
MXX Average	-27,218	-0.46	36,660	0.62	-$56,109	$745,472	$689,363	$11.57	$69,949				
LXX Average	-103,723	-0.64	52,229	0.32	-$226,639	$1,070,424	$843,785	$5.20	$88,378				
XAX Average	-81,681	-1.28	32,867	0.52	-$174,401	$671,657	$497,257	$8.01	$60,813				
XEX Average	-56,781	-0.81	32,956	0.52	-$121,575	$673,540	$551,965	$9.00	$57,021				
XFX Average	-12,843	-0.10	33,161	0.53	-$30,393	$677,860	$647,467	$10.50	$60,446				
ALL Average	-49,166	-0.71	33,001	0.53	-$106,232	$674,515	$568,282	$9.20	$59,908				

CTZ07 San Diego-Lindbergh - Refrigeration Heat Recovery

	Energy Savings (kWh)	Energy Savings / SF (kWh)	Natural Gas Savings (Therms)	Natural Gas Savings /SF (Therms)	TDV Electric Cost Savings ($)	TDV Gas Cost Savings ($)	TDV Total Cost Savings ($)	TDV Total Cost Savings /SF ($)	Measure Cost ($)	Refrigerant Cost Savings Range ($)		Net Savings Range ($)	
SAC	-18,715	-1.18	6,247	0.39	-$40,334	$130,863	$90,529	$5.71	$20,926	-$12,234	-$18,351	$57,369	$51,252
SAD	-22,332	-1.41	6,247	0.39	-$47,739	$130,875	$83,137	$5.25	$23,202	-$5,182	-$10,365	$54,752	$49,570
SEC	-12,663	-0.80	6,249	0.39	-$27,834	$130,912	$103,078	$6.50	$20,926	-$12,574	-$18,860	$69,579	$63,292
SFC	-6,175	-0.39	6,253	0.39	-$13,906	$130,985	$117,080	$7.39	$20,926	-$10,761	-$16,142	$85,392	$80,012
SFD	-6,118	-0.39	6,252	0.39	-$13,493	$130,985	$117,492	$7.41	$21,000	-$4,814	-$9,629	$91,678	$86,864
MAC	-55,969	-0.94	23,840	0.40	-$120,512	$496,470	$375,958	$6.31	$66,536	-$41,458	-$62,187	$267,964	$247,235
MAD	-69,373	-1.16	23,840	0.40	-$146,316	$496,457	$350,141	$5.88	$75,068	-$16,029	-$32,057	$259,045	$243,016

MEC	-25,782	-0.43	23,854	0.40	-$58,533	$496,739	$438,206	$7.36	$66,536	-$43,327	-$64,990	$328,343	$306,680
MFC	785	0.01	23,868	0.40	-$647	$497,033	$496,386	$8.33	$66,536	-$33,926	-$50,889	$395,924	$378,961
MFD	34,852	0.59	23,871	0.40	$71,569	$497,106	$568,675	$9.55	$75,068	-$14,160	-$28,320	$479,447	$465,288
LAC	-116,133	-0.72	22,962	0.14	-$251,049	$498,269	$247,219	$1.52	$83,600	-$65,101	-$97,651	$98,519	$65,969
LAD	-118,808	-0.73	22,942	0.14	-$254,238	$497,804	$243,565	$1.50	$95,545	-$26,807	-$53,613	$121,213	$94,407
LEC	-89,692	-0.55	22,973	0.14	-$198,081	$498,501	$300,421	$1.85	$83,600	-$67,398	-$101,097	$149,423	$115,724
LFC	-57,760	-0.36	23,027	0.14	-$134,295	$499,725	$365,430	$2.25	$83,600	-$55,911	-$83,866	$225,919	$197,963
LFD	-56,745	-0.35	23,012	0.14	-$130,860	$499,382	$368,522	$2.27	$95,545	-$24,509	-$49,019	$248,467	$223,958
SXX Average	-13,201	-0.83	6,250	0.39	-$28,661	$130,924	$102,263	$6.45	$21,396				
MXX Average	-23,097	-0.39	23,855	0.40	-$50,888	$496,761	$445,873	$7.49	$69,949				
LXX Average	-87,828	-0.54	22,983	0.14	-$193,705	$498,736	$305,031	$1.88	$88,378				
XAX Average	-66,888	-1.02	17,680	0.31	-$143,365	$375,123	$231,758	$4.36	$60,813				
XEX Average	-42,712	-0.60	17,692	0.31	-$94,816	$375,384	$280,568	$5.24	$57,021				
XFX Average	-15,194	-0.15	17,714	0.31	-$36,939	$375,869	$338,931	$6.20	$60,446				
ALL Average	-41,375	-0.59	17,696	0.31	-$91,085	$375,474	$284,389	$5.27	$59,908				

CTZ08 Fullerton - Refrigeration Heat Recovery

	Energy Savings (kWh)	Energy Savings / SF (kWh)	Natural Gas Savings (Therms)	Natural Gas Savings /SF (Therms)	TDV Electric Cost Savings ($)	TDV Gas Cost Savings ($)	TDV Total Cost Savings ($)	TDV Total Cost Savings /SF ($)	Measure Cost ($)	Refrigerant Cost Savings Range ($)		Net Savings Range ($)	
SAC	-20,858	-1.32	7,543	0.48	-$44,549	$163,805	$119,256	$7.52	$20,926	-$12,234	-$18,351	$86,096	$79,979
SAD	-23,106	-1.46	7,541	0.48	-$48,709	$163,744	$115,035	$7.26	$23,202	-$5,182	-$10,365	$86,651	$81,468
SEC	-17,518	-1.11	7,544	0.48	-$37,736	$163,793	$126,057	$7.95	$20,926	-$12,574	-$18,860	$92,557	$86,271
SFC	-9,714	-0.61	7,553	0.48	-$22,436	$164,026	$141,589	$8.93	$20,926	-$10,761	-$16,142	$109,902	$104,521
SFD	-10,663	-0.67	7,552	0.48	-$23,931	$163,977	$140,046	$8.84	$21,000	-$4,814	-$9,629	$114,232	$109,417
MAC	-58,999	-0.99	20,787	0.35	-$126,545	$439,151	$312,606	$5.25	$66,536	-$41,458	-$62,187	$204,612	$183,883
MAD	-69,474	-1.17	20,787	0.35	-$144,666	$439,151	$294,486	$4.94	$75,068	-$16,029	-$32,057	$203,389	$187,360
MEC	-35,499	-0.60	20,792	0.35	-$79,754	$439,237	$359,483	$6.04	$66,536	-$43,327	-$64,990	$249,620	$227,957
MFC	-9,982	-0.17	20,809	0.35	-$29,584	$439,592	$410,007	$6.88	$66,536	-$33,926	-$50,889	$309,545	$292,582
MFD	-11,884	-0.20	20,809	0.35	-$31,424	$439,592	$408,168	$6.85	$75,068	-$14,160	-$28,320	$318,940	$304,780
LAC	-110,056	-0.68	21,570	0.13	-$233,709	$472,840	$239,131	$1.48	$83,600	-$65,101	-$97,651	$90,430	$57,880
LAD	-110,114	-0.68	21,536	0.13	-$231,735	$472,081	$240,346	$1.48	$95,545	-$26,807	-$53,613	$117,994	$91,188
LEC	-92,209	-0.57	21,577	0.13	-$198,794	$473,011	$274,217	$1.69	$83,600	-$67,398	-$101,097	$123,219	$89,520
LFC	-62,349	-0.38	21,657	0.13	-$140,975	$474,798	$333,823	$2.06	$83,600	-$55,911	-$83,866	$194,312	$166,357
LFD	-61,792	-0.38	21,640	0.13	-$138,254	$474,419	$336,165	$2.07	$95,545	-$24,509	-$49,019	$216,110	$191,601
SXX Average	-16,372	-1.03	7,547	0.48	-$35,472	$163,869	$128,397	$8.10	$21,396				
MXX Average	-37,168	-0.62	20,797	0.35	-$82,395	$439,345	$356,950	$5.99	$69,949				
LXX Average	-87,304	-0.54	21,596	0.13	-$188,693	$473,430	$284,736	$1.76	$88,378				
XAX Average	-65,435	-1.05	16,627	0.32	-$138,319	$358,462	$220,143	$4.66	$60,813				
XEX Average	-48,409	-0.76	16,638	0.32	-$105,428	$358,680	$253,252	$5.23	$57,021				
XFX Average	-27,731	-0.40	16,670	0.32	-$64,434	$359,400	$294,966	$5.94	$60,446				
ALL Average	-46,948	-0.73	16,646	0.32	-$102,187	$358,881	$256,694	$5.28	$59,908				

CTZ10 Riverside - Refrigeration Heat Recovery

	Energy Savings (kWh)	Energy Savings / SF (kWh)	Natural Gas Savings (Therms)	Natural Gas Savings /SF (Therms	TDV Electric Cost Savings ($)	TDV Gas Cost Savings ($)	TDV Total Cost Savings ($)	TDV Total Cost Savings /SF	Measure Cost ($)	Refrigerant Cost Savings Range ($)	Net Savings Range ($)

				)				($)					
SAC	-19,177	-1.21	5,343	0.34	-$40,267	$116,436	$76,168	$4.81	$20,926	-$12,234	-$18,351	$43,008	$36,892
SAD	-21,182	-1.34	5,342	0.34	-$43,813	$116,436	$72,622	$4.58	$23,202	-$5,182	-$10,365	$44,238	$39,055
SEC	-16,641	-1.05	5,342	0.34	-$35,361	$116,448	$81,087	$5.12	$20,926	-$12,574	-$18,860	$47,587	$41,301
SFC	-9,927	-0.63	5,348	0.34	-$22,682	$116,558	$93,876	$5.92	$20,926	-$10,761	-$16,142	$62,189	$56,808
SFD	-10,528	-0.66	5,348	0.34	-$23,329	$116,558	$93,229	$5.88	$21,000	-$4,814	-$9,629	$67,415	$62,601
MAC	-61,925	-1.04	20,368	0.34	-$129,734	$437,866	$308,132	$5.17	$66,536	-$41,458	-$62,187	$200,138	$179,409
MAD	-71,575	-1.20	20,368	0.34	-$146,428	$437,866	$291,439	$4.89	$75,068	-$16,029	-$32,057	$200,342	$184,314
MEC	-44,385	-0.75	20,368	0.34	-$95,533	$437,879	$342,346	$5.75	$66,536	-$43,327	-$64,990	$232,483	$210,819
MFC	-16,675	-0.28	20,384	0.34	-$42,854	$438,197	$395,342	$6.64	$66,536	-$33,926	-$50,889	$294,880	$277,917
MFD	-20,538	-0.34	20,384	0.34	-$48,040	$438,197	$390,157	$6.55	$75,068	-$14,160	-$28,320	$300,929	$286,770
LAC	-109,129	-0.67	24,338	0.15	-$229,215	$536,583	$307,368	$1.90	$83,600	-$65,101	-$97,651	$158,667	$126,117
LAD	-108,758	-0.67	24,260	0.15	-$227,453	$534,796	$307,343	$1.90	$95,545	-$26,807	-$53,613	$184,991	$158,185
LEC	-99,078	-0.61	24,357	0.15	-$210,202	$536,987	$326,785	$2.02	$83,600	-$67,398	-$101,097	$175,787	$142,088
LFC	-69,051	-0.43	24,531	0.15	-$152,929	$540,890	$387,961	$2.39	$83,600	-$55,911	-$83,866	$248,450	$220,495
LFD	-69,445	-0.43	24,479	0.15	-$152,026	$539,715	$387,690	$2.39	$95,545	-$24,509	-$49,019	$267,635	$243,126
SXX Average	-15,491	-0.98	5,345	0.34	-$33,090	$116,487	$83,397	$5.26	$21,396				
MXX Average	-43,020	-0.72	20,374	0.34	-$92,518	$438,001	$345,483	$5.80	$69,949				
LXX Average	-91,092	-0.56	24,393	0.15	-$194,365	$537,794	$343,429	$2.12	$88,378				
XAX Average	-65,291	-1.02	16,670	0.28	-$136,152	$363,331	$227,179	$3.87	$60,813				
XEX Average	-53,368	-0.80	16,689	0.28	-$113,699	$363,771	$250,072	$4.29	$57,021				
XFX Average	-32,694	-0.46	16,746	0.28	-$73,643	$365,019	$291,376	$4.96	$60,446				
ALL Average	-49,868	-0.75	16,704	0.28	-$106,658	$364,094	$257,436	$4.39	$59,908				

CTZ12 Sacramento - Refrigeration Heat Recovery

	Energy Savings (kWh)	Energy Savings / SF (kWh)	Natural Gas Savings (Therms)	Natural Gas Savings /SF (Therms)	TDV Electric Cost Savings ($)	TDV Gas Cost Savings ($)	TDV Total Cost Savings ($)	TDV Total Cost Savings /SF ($)	Measure Cost ($)	Refrigerant Cost Savings Range ($)		Net Savings Range ($)	
SAC	-20,858	-1.32	7,543	0.48	-$44,549	$163,805	$119,256	$7.52	$20,926	-$12,234	-$18,351	$86,096	$79,979
SAD	-23,106	-1.46	7,541	0.48	-$48,709	$163,744	$115,035	$7.26	$23,202	-$5,182	-$10,365	$86,651	$81,468
SEC	-17,518	-1.11	7,544	0.48	-$37,736	$163,793	$126,057	$7.95	$20,926	-$12,574	-$18,860	$92,557	$86,271
SFC	-9,714	-0.61	7,553	0.48	-$22,436	$164,026	$141,589	$8.93	$20,926	-$10,761	-$16,142	$109,902	$104,521
SFD	-10,663	-0.67	7,552	0.48	-$23,931	$163,977	$140,046	$8.84	$21,000	-$4,814	-$9,629	$114,232	$109,417
MAC	-68,559	-1.15	27,063	0.45	-$146,294	$578,776	$432,482	$7.26	$66,536	-$41,458	-$62,187	$324,488	$303,759
MAD	-79,872	-1.34	27,063	0.45	-$166,991	$578,764	$411,773	$6.91	$75,068	-$16,029	-$32,057	$320,677	$304,648
MEC	-46,237	-0.78	27,065	0.45	-$100,674	$578,813	$478,139	$8.03	$66,536	-$43,327	-$64,990	$368,276	$346,613
MFC	-13,758	-0.23	27,081	0.45	-$36,955	$579,156	$542,200	$9.10	$66,536	-$33,926	-$50,889	$441,738	$424,775
MFD	-19,581	-0.33	27,081	0.45	-$46,624	$579,156	$532,532	$8.94	$75,068	-$14,160	-$28,320	$443,304	$429,144
LAC	-118,989	-0.73	36,483	0.23	-$254,328	$796,535	$542,207	$3.34	$83,600	-$65,101	-$97,651	$393,506	$360,956
LAD	-119,504	-0.74	36,297	0.22	-$254,450	$792,325	$537,875	$3.32	$95,545	-$26,807	-$53,613	$415,523	$388,716
LEC	-107,079	-0.66	36,537	0.23	-$230,531	$797,758	$567,228	$3.50	$83,600	-$67,398	-$101,097	$416,230	$382,531
LFC	-69,796	-0.43	37,042	0.23	-$156,642	$808,980	$652,337	$4.02	$83,600	-$55,911	-$83,866	$512,827	$484,871
LFD	-71,449	-0.44	36,917	0.23	-$158,583	$806,190	$647,607	$3.99	$95,545	-$24,509	-$49,019	$527,553	$503,043
SXX Average	-16,372	-1.03	7,547	0.48	-$35,472	$163,869	$128,397	$8.10	$21,396				
MXX Average	-45,601	-0.77	27,071	0.45	-$99,507	$578,933	$479,425	$8.05	$69,949				
LXX Average	-97,363	-0.60	36,655	0.23	-$210,907	$800,357	$589,451	$3.64	$88,378				
XAX Average	-71,815	-1.12	23,665	0.38	-	$512,32	$359,77	$5.94	$60,813				

					$152,553	5	1		
XEX Average	-56,945	-0.85	23,715	0.39	-$122,980	$513,455	$390,475	$6.49	$57,021
XFX Average	-32,494	-0.45	23,871	0.39	-$74,195	$516,914	$442,719	$7.31	$60,446
ALL Average	-53,112	-0.80	23,756	0.39	-$115,295	$514,386	$399,091	$6.60	$59,908

CTZ13 Fresno - Refrigeration Heat Recovery

	Energy Savings (kWh)	Energy Savings / SF (kWh)	Natural Gas Savings (Therms)	Natural Gas Savings /SF (Therms)	TDV Electric Cost Savings ($)	TDV Gas Cost Savings ($)	TDV Total Cost Savings ($)	TDV Total Cost Savings /SF ($)	Measure Cost ($)	Refrigerant Cost Savings Range ($)		Net Savings Range ($)	
SAC	-19,194	-1.21	6,448	0.41	-$41,371	$143,174	$101,802	$6.42	$20,926	-$12,234	-$18,351	$68,642	$62,526
SAD	-20,958	-1.32	6,446	0.41	-$44,616	$143,125	$98,508	$6.22	$23,202	-$5,182	-$10,365	$70,124	$64,941
SEC	-16,946	-1.07	6,448	0.41	-$36,587	$143,174	$106,586	$6.73	$20,926	-$12,574	-$18,860	$73,087	$66,800
SFC	-10,125	-0.64	6,456	0.41	-$23,317	$143,345	$120,028	$7.57	$20,926	-$10,761	-$16,142	$88,340	$82,959
SFD	-10,991	-0.69	6,455	0.41	-$24,600	$143,320	$118,721	$7.49	$21,000	-$4,814	-$9,629	$92,906	$88,092
MAC	-63,148	-1.06	22,549	0.38	-$136,046	$494,989	$358,943	$6.03	$66,536	-$41,458	-$62,187	$250,949	$230,220
MAD	-71,922	-1.21	22,549	0.38	-$151,858	$494,977	$343,118	$5.76	$75,068	-$16,029	-$32,057	$252,022	$235,993
MEC	-46,988	-0.79	22,550	0.38	-$102,402	$494,989	$392,587	$6.59	$66,536	-$43,327	-$64,990	$282,724	$261,060
MFC	-17,805	-0.30	22,564	0.38	-$45,118	$495,283	$450,165	$7.56	$66,536	-$33,926	-$50,889	$349,703	$332,740
MFD	-22,845	-0.38	22,564	0.38	-$53,114	$495,283	$442,169	$7.42	$75,068	-$14,160	-$28,320	$352,941	$338,782
LAC	-108,088	-0.67	30,743	0.19	-$233,073	$685,520	$452,447	$2.79	$83,600	-$65,101	-$97,651	$303,746	$271,196
LAD	-107,673	-0.66	30,585	0.19	-$231,668	$681,935	$450,266	$2.78	$95,545	-$26,807	-$53,613	$327,915	$301,108
LEC	-101,278	-0.62	30,798	0.19	-$219,379	$686,793	$467,413	$2.88	$83,600	-$67,398	-$101,097	$316,415	$282,716
LFC	-70,553	-0.44	31,178	0.19	-$158,382	$695,383	$537,001	$3.31	$83,600	-$55,911	-$83,866	$397,490	$369,535
LFD	-71,882	-0.44	31,080	0.19	-$159,664	$693,144	$533,479	$3.29	$95,545	-$24,509	-$49,019	$413,425	$388,916
SXX Average	-15,643	-0.99	6,451	0.41	-$34,098	$143,227	$109,129	$6.89	$21,396				
MXX Average	-44,542	-0.75	22,555	0.38	-$97,708	$495,104	$397,396	$6.67	$69,949				
LXX Average	-91,895	-0.57	30,877	0.19	-$200,433	$688,555	$488,121	$3.01	$88,378				
XAX Average	-65,164	-1.02	19,887	0.32	-$139,772	$440,620	$300,848	$5.00	$60,813				
XEX Average	-55,071	-0.83	19,932	0.33	-$119,456	$441,652	$322,195	$5.40	$57,021				
XFX Average	-34,034	-0.48	20,050	0.33	-$77,366	$444,293	$366,927	$6.11	$60,446				
ALL Average	-50,693	-0.77	19,960	0.33	-$110,747	$442,295	$331,549	$5.52	$59,908				

CTZ14 Palmdale - Refrigeration Heat Recovery

	Energy Savings (kWh)	Energy Savings / SF (kWh)	Natural Gas Savings (Therms)	Natural Gas Savings /SF (Therms)	TDV Electric Cost Savings ($)	TDV Gas Cost Savings ($)	TDV Total Cost Savings ($)	TDV Total Cost Savings /SF ($)	Measure Cost ($)	Refrigerant Cost Savings Range ($)		Net Savings Range ($)	
SAC	-18,973	-1.20	6,902	0.44	-$40,122	$153,257	$113,135	$7.14	$20,926	-$12,234	-$18,351	$79,975	$73,858
SAD	-20,755	-1.31	6,898	0.44	-$43,323	$153,159	$109,836	$6.93	$23,202	-$5,182	-$10,365	$81,452	$76,269
SEC	-19,280	-1.22	6,902	0.44	-$40,568	$153,232	$112,664	$7.11	$20,926	-$12,574	-$18,860	$79,164	$72,878
SFC	-12,960	-0.82	6,909	0.44	-$28,492	$153,404	$124,912	$7.88	$20,926	-$10,761	-$16,142	$93,225	$87,844
SFD	-14,521	-0.92	6,905	0.44	-$31,134	$153,318	$122,184	$7.71	$21,000	-$4,814	-$9,629	$96,369	$91,555
MAC	-62,289	-1.05	24,108	0.40	-$131,496	$529,571	$398,075	$6.68	$66,536	-$41,458	-$62,187	$290,081	$269,352
MAD	-71,102	-1.19	24,108	0.40	-$146,896	$529,571	$382,675	$6.43	$75,068	-$16,029	-$32,057	$291,578	$275,550
MEC	-59,519	-1.00	24,104	0.40	-$125,486	$529,522	$404,036	$6.78	$66,536	-$43,327	-$64,990	$294,174	$272,510
MFC	-28,747	-0.48	24,116	0.40	-$66,071	$529,742	$463,671	$7.79	$66,536	-$33,926	-$50,889	$363,209	$346,246
MFD	-36,869	-0.62	24,115	0.40	-$79,765	$529,742	$449,977	$7.56	$75,068	-$14,160	-$28,320	$360,749	$346,590
LAC	-108,263	-0.67	33,736	0.21	-$229,471	$751,184	$521,713	$3.22	$83,600	-$65,101	-$97,651	$373,012	$340,462

LAD	-108,129	-0.67	33,540	0.21	-$228,356	$746,718	$518,361	$3.20	$95,545	-$26,807	-$53,613	$396,010	$369,203
LEC	-109,532	-0.68	33,778	0.21	-$231,891	$752,139	$520,247	$3.21	$83,600	-$67,398	-$101,097	$369,249	$335,550
LFC	-85,136	-0.53	33,994	0.21	-$184,665	$756,899	$572,233	$3.53	$83,600	-$55,911	-$83,866	$432,722	$404,767
LFD	-87,121	-0.54	33,859	0.21	-$187,130	$753,791	$566,661	$3.50	$95,545	-$24,509	-$49,019	$446,606	$422,097
SXX Average	-17,298	-1.09	6,903	0.44	-$36,728	$153,274	$116,546	$7.35	$21,396				
MXX Average	-51,705	-0.87	24,110	0.40	-$109,943	$529,630	$419,687	$7.05	$69,949				
LXX Average	-99,636	-0.61	33,781	0.21	-$212,303	$752,146	$539,843	$3.33	$88,378				
XAX Average	-64,919	-1.01	21,549	0.35	-$136,611	$477,243	$340,632	$5.60	$60,813				
XEX Average	-62,777	-0.96	21,595	0.35	-$132,648	$478,298	$345,649	$5.70	$57,021				
XFX Average	-44,226	-0.65	21,650	0.35	-$96,210	$479,483	$383,273	$6.33	$60,446				
ALL Average	-56,213	-0.86	21,598	0.35	-$119,658	$478,350	$358,692	$5.91	$59,908				

CTZ15 Palm Springs - Refrigeration Heat Recovery

	Energy Savings (kWh)	Energy Savings / SF (kWh)	Natural Gas Savings (Therms)	Natural Gas Savings /SF (Therms)	TDV Electric Cost Savings ($)	TDV Gas Cost Savings ($)	TDV Total Cost Savings ($)	TDV Total Cost Savings /SF ($)	Measure Cost ($)	Refrigerant Cost Savings Range ($)		Net Savings Range ($)	
SAC	-14,987	-0.95	2,250	0.14	-$32,539	$51,689	$19,150	$1.21	$20,926	-$12,234	-$18,351	-$14,010	-$20,127
SAD	-15,793	-1.00	2,250	0.14	-$33,933	$51,689	$17,756	$1.12	$23,202	-$5,182	-$10,365	-$10,629	-$15,811
SEC	-15,409	-0.97	2,250	0.14	-$33,220	$51,677	$18,457	$1.16	$20,926	-$12,574	-$18,860	-$15,042	-$21,329
SFC	-10,655	-0.67	2,251	0.14	-$24,154	$51,726	$27,572	$1.74	$20,926	-$10,761	-$16,142	-$4,115	-$9,496
SFD	-10,901	-0.69	2,251	0.14	-$24,265	$51,726	$27,461	$1.73	$21,000	-$4,814	-$9,629	$1,646	-$3,168
MAC	-48,067	-0.81	8,532	0.14	-$105,335	$194,802	$89,467	$1.50	$66,536	-$41,458	-$62,187	-$18,527	-$39,256
MAD	-51,536	-0.87	8,532	0.14	-$110,844	$194,802	$83,958	$1.41	$75,068	-$16,029	-$32,057	-$7,139	-$23,167
MEC	-47,445	-0.80	8,529	0.14	-$102,926	$194,728	$91,802	$1.54	$66,536	-$43,327	-$64,990	-$18,061	-$39,724
MFC	-25,995	-0.44	8,538	0.14	-$61,800	$194,949	$133,148	$2.24	$66,536	-$33,926	-$50,889	$32,686	$15,723
MFD	-26,917	-0.45	8,538	0.14	-$61,455	$194,949	$133,494	$2.24	$75,068	-$14,160	-$28,320	$44,266	$30,106
LAC	-83,699	-0.52	7,502	0.05	-$181,108	$172,848	-$8,260	-$0.05	$83,600	-$65,101	-$97,651	-$156,960	-$189,511
LAD	-81,478	-0.50	7,499	0.05	-$176,625	$172,775	-$3,850	-$0.02	$95,545	-$26,807	-$53,613	-$126,202	-$153,009
LEC	-81,558	-0.50	7,502	0.05	-$177,216	$172,848	-$4,368	-$0.03	$83,600	-$67,398	-$101,097	-$155,366	-$189,065
LFC	-67,603	-0.42	7,507	0.05	-$151,067	$172,983	$21,916	$0.14	$83,600	-$55,911	-$83,866	-$117,594	-$145,550
LFD	-65,948	-0.41	7,506	0.05	-$146,216	$172,946	$26,731	$0.16	$95,545	-$24,509	-$49,019	-$93,324	-$117,833
SXX Average	-13,549	-0.85	2,250	0.14	-$29,622	$51,702	$22,079	$1.39	$21,396				
MXX Average	-39,992	-0.67	8,534	0.14	-$88,472	$194,846	$106,374	$1.79	$69,949				
LXX Average	-76,057	-0.47	7,503	0.05	-$166,447	$172,880	$6,434	$0.04	$88,378				
XAX Average	-49,260	-0.77	6,094	0.11	-$106,731	$139,768	$33,037	$0.86	$60,813				
XEX Average	-48,137	-0.76	6,094	0.11	-$104,454	$139,751	$35,297	$0.89	$57,021				
XFX Average	-34,670	-0.51	6,099	0.11	-$78,159	$139,880	$61,720	$1.37	$60,446				
ALL Average	-43,199	-0.67	6,096	0.11	-$94,847	$139,809	$44,962	$1.07	$59,908				

15. Appendix J: Acronym List and Glossary

AB 32	(Assembly Bill 32) California Global Warming Solutions Act of 2006
AC	Air conditioner, or Air-conditioning
AHRI	Air-conditioning, Heating, and Refrigeration Institute
ARB	(California) Air Resources Board
B/C	Benefit to cost ratio
Btu	British thermal unit
Btu/h	British thermal units per hour
CA	California
CARB	California Air Resources Board
CASE	Codes and Standards Enhancement
CEC	California Energy Commission
CFC	Chlorofluorocarbon
CO_2	Carbon dioxide
CTZ01	Climate zone 1 - Arcata
CTZ03	Climate zone 3 - Oakland
CTZ05	Climate zone 5 - Santa Maria
CTZ07	Climate zone 7 - San Diego (Lindbergh)
CTZ08	Climate zone 8 - Fullerton
CTZ10	Climate zone 10 - Riverside
CTZ12	Climate zone 12 - Sacramento (Sacramento Executive Airport)
CTZ13	Climate zone 13 - Fresno
CTZ14	Climate zone 14 - Palmdale
CTZ15	Climate zone 15 - Palm Springs
DOE 2.2R	Department of Energy, energy simulation software, version 2.2R
DX	Direct expansion (refrigeration system)
EER	Energy efficiency ratio
EUL	Effective useful life
GHG	Greenhouse gas
GWP	Global warming potential
HFC	Hydrofluorocarbon

HVAC	Heating, ventilation, and air-conditioning
IPCC	Intergovernmental Panel on Climate Change
IPCC/TEAP	Intergovernmental Panel on Climate Change Technology and Assessment Panel
kW	Kilo-watt
kWh	Kilo-watt hour
LAC	Big box store (with) air-cooled (condenser) central (compressor system)
LAD	Big box store (with) air-cooled (condenser) distributed (compressor system)
LCC	Life-cycle costing
LEC	Big box store (with) evaporative-cooled (condenser) central (compressor system)
LED	Light-emitting diode
LFC	Big box store (with) water-cooled (condenser) central (compressor system)
LFD	Big box store (with) water-cooled (condenser) distributed (compressor system)
LSHX	Liquid suction heat exchanger
LT	Low-temperature
MAC	Large (supermarket with) air-cooled (condenser) central (compressor system)
MAD	Large (supermarket with) air-cooled (condenser) distributed (compressor system)
MBH	Thousand British thermal units per hour
MEC	Large (supermarket with) evaporative-cooled (condenser) central (compressor system)
MFC	Large (supermarket with) water-cooled (condenser) central (compressor system)
MFD	Large (supermarket with) water-cooled (condenser) distributed (compressor system)
MMBtu	Million British thermal units
MMTCO_2eq	Million metric tons of carbon dioxide equivalents
MT	Medium-temperature
MTCO_2eq	Metric tons of carbon dioxide equivalents
NAICS	North American Industry Classification System
PG&E	Pacific Gas and Electric
R-404A	Refrigerant 404A, a "nearly azeotropic" blend of hydrofluorocarbons R-143a (52 wt.%), R-125 (44 wt.%), and R-134a (4 wt.%).

R-507	Refrigerant 507A, a "nearly azeotropic" blend of hydrofluorocarbons R-143a (50 wt.%), and R-125 (50 wt.%).
RGT	Return gas temperature
SAC	Small (supermarket with) air-cooled (condenser) central (compressor system)
SAD	Small (supermarket with) air-cooled (condenser) distributed (compressor system)
SBD	Savings By Design
SCAQMD	South Coast Air Quality Management District
SCE	Southern California Edison
SCT	Saturated condensing temperature
SDG&E	San Diego Gas and Electric
SEC	Small (supermarket with) evaporative-cooled (condenser) central (compressor system)
SET	Saturated evaporating temperature
SF	Square foot
SFC	Small (supermarket with) water-cooled (condenser) central (compressor system)
SFD	Small (supermarket with) water-cooled (condenser) distributed (compressor system)
SST	Saturated suction temperature
TBD	To be determined
TD	Temperature difference
TDV	Time-dependent valuation
THR	Total heat of rejection
TXV	Thermostatic expansion valve
U.S. EPA	United States Environmental Protection Agency
W	Watt
WBT	Wet-bulb temperature

ADDITION is any change to a building that increases conditioned floor area and conditioned volume. Addition is also any change that increases the floor area or volume of an unconditioned building of an occupancy group or type regulated by Part 6.

ALTERATION is any change to a building's water-heating system, space-conditioning system, lighting system, or envelope that is not an addition.

APPLIANCE EFFICIENCY REGULATIONS are the regulations in Title 20, Section 1601 et seq. of the California Code of Regulations.

BUBBLE POINT. Refrigerant liquid saturation temperature at a specified pressure.

CONDENSER SPECIFIC EFFICIENCY is the Total Heat of Rejection (THR) capacity divided by the fan input electric power at 100% fan speed (including spray pump electric input power for evaporative condensers).

COOLER is space greater than or equal to 28°F but less than 55°F.

CLIMATE ZONES are the 16 geographic areas of California for which the Commission has established typical weather data, prescriptive packages and energy budgets. Climate zone boundary descriptions are in the document "California Climate Zone Descriptions" (July 1995).

CLOSED-CIRCUIT COOLING TOWER is a closed-circuit cooling tower that utilizes indirect contact between a heated fluid, typically water or glycol, and the cooling atmosphere to transfer the source heat load indirectly to the air, essentially combining a heat exchanger and cooling tower into one relatively compact device.

DEW POINT. Refrigerant vapor saturation temperature at a specified pressure.

FREEZER is space designed to maintain less than 28°F and space designed for convertible between cooler and freezer operation.

MICRO-CHANNEL CONDENSER is an air-cooled condenser for refrigeration systems which utilizes multiple small parallel gas flow passages in a flat configuration with unitized fin surface between the gas passages, rather than round tubes arranged at a right angle to separate plate fins.

REFRIGERANT CONDENSING TEMPERATURE: See SATURATED CONDENSING TEMPERATURE

REFRIGERATED WAREHOUSE is a building or a space constructed for storage of products, where mechanical refrigeration is used to maintain the space temperature at 55o F or less.

REFRIGERATED SPACE is a building or a space that is a refrigerated warehouse, walk-in cooler, or a freezer.

SATURATED CONDENSING TEMPERATURE (CONDENSING TEMPERATURE, or SCT). For single component and azeotropic refrigerants, the saturation temperature corresponding to the refrigerant pressure at the condenser entrance. For zeotropic refrigerants, the arithmetic average of the Dew Point and Bubble Point temperatures corresponding to the refrigerant pressure at the condenser entrance.

THERMOSTATIC EXPANSION VALVE (TXV) is a refrigerant metering valve, installed in an air conditioner or heat pump, which controls the flow of liquid refrigerant entering the evaporator in response to the superheat of the gas leaving it.

TIME DEPENDENT VALUATION (TDV) ENERGY is the time varying energy caused to be used by the building to provide space conditioning and water heating and for specified buildings lighting. TDV energy accounts for the energy used at the building site and consumed in producing and in delivering energy to a site, including, but not limited to, power generation, transmission and distribution losses.

TOTAL HEAT OF REJECTION (THR) is the heat absorbed at the evaporator plus the heat picked up in the suction line plus the heat added to the refrigerant in the compressor.

16. Appendix K: Nonresidential Construction Forecast

The Non-Residential construction forecast dataset is data that is published by the California Energy Commission's (CEC) Demand Forecast Office. The Demand Forecast Office is charged with calculating the required electricity and natural gas supply centers to meet the utility loads from new construction. Data is sourced from Dodge construction database, the demand forecast office future generation facility planning data, and building permit office data.

All CASE reports should use the statewide construction forecast for 2014. The TDV savings analysis is calculated on a 15 or 30 year net present value, so it is correct to use the 2014 construction forecast as the basis for CASE savings.

The demand forecast office publishes this dataset and categorizes the data by demand forecast climate zones (FCZ) as well as building type (based on NAICS codes). The 16 climate zones are organized by the generation facility locations throughout California, and differ from the Title 24 building climate zones (BCZ). HMG has reorganized the demand forecast office data using 2000 Census data (population weighted by zip code) and mapped FCZ and BCZ to a given zip code. The construction forecast data is provided to CASE authors in BCZ in order to calculate Title 24 statewide energy savings impacts. Though the individual climate zone categories differ between the demand forecast published by the CEC and the construction forecast, the total construction estimates are consistent; in other words, HMG has not added to or subtracted from total construction area.

The demand forecast office provides two (2) independent data sets: total construction and additional construction. Total construction is the sum of all existing floor space in a given category (small office, large office, restaurant, etc.). Additional construction is floor space area constructed in a given year (new construction); this data is derived from the sources mentioned above (Dodge, Demand Forecast Office, building permits, etc).

Additional construction is an independent dataset from total construction. The difference between two consecutive years of total construction is not necessarily the additional construction for the year because this difference does not take into consideration floor space that was renovated or repurposed.

In order to further specify the construction forecast for the purpose of statewide energy savings calculation for Title 24 compliance, HMG has provided CASE authors with the ability to aggregate across multiple building types. This tool is useful for measures that apply to a portion of various building types' floor space (e.g. skylight requirements might apply to 20% of offices, 50% of warehouses and 25% of college floor space).

The main purpose of the CEC demand forecast is to estimate electricity and natural gas needs in 2022 (or 10-12 years in the future), and this dataset is much less concerned about the inaccuracy at 12 or 24 month timeframe.

It is appropriate to use the CEC demand forecast construction data as an estimate of future years construction (over the life of the measure). The CEC non-residential construction forecast is the best publicly available data to estimate statewide energy savings.

Citation

"NonRes Construction Forecast by BCZ v7"; Developed by Heschong Mahone Group with data sourced August, 2010 from Abrishami, Moshen at the California Energy Commission (CEC).