Assessment of Cost Effectiveness and Public Acceptance of Tier II Emission Standards for Handheld Equipment

FINAL REPORT

Report under CARB Contract No:
95-909

submitted to
The State of California
Air Resources Board
Mobile Source Division
9528 Telstar Avenue
El Monte, CA 91731

October 2, 1997

submitted by

Lit-Mian Chan
Christopher S. Weaver, P.E.
Engine, Fuel, and Emissions Engineering, Inc.
9812 Old Winery Place, Suite 22
Sacramento, CA 95827-1732
(916) 368-4770

The statements and conclusions in this report are those of the contractor and not necessarily those of the California Air Resources Board. The mention of commercial products, their source or their use in connection with material reported herein is not to be construed as either an actual or implied endorsement of such products.

ABSTRACT

The California Air Resources Board (ARB) was required to consider regulating the emissions from off-road mobile sources, including engines used in utility and lawn and garden equipment, by the 1988 California Clean Air Act (CCAA). As a result, the ARB has established two-tier emission standards for utility and lawn and garden equipment engines, including engines used in handheld equipment. The Tier I emission standards took effect in 1995, and have been met by means of simple engine and carburetor modifications. The more stringent Tier II emission standards will take effect in 1999, and are considered technology-forcing. While it has been proven that the Tier II standards are technologically feasible, controversy has arisen over the costs of these technologies, as well as the cost-effectiveness of the standards and their impacts on the consumer market.

While the CCAA required ARB to control emissions from off-road mobile sources, the Federal Clean Air Act Amendments of 1990 (CAAA) include a provision that prohibits any state or political subdivision from regulating emissions from new construction or farm equipment less than 175 horsepower (hp). As a result of this provision, chainsaws with engine size greater than 45 cc, and blade capable brushcutters and clearing saws with engine size greater than 40 cc are exempt from ARB regulations. While ARB had emission inventory estimates for all handheld equipment, the fraction of the emission inventory produced by these preempted equipment categories was not known.

In order to clarify these questions, ARB contracted with Engine, Fuel and Emissions Engineering, Inc. (EF&EE) to assess the cost-effectiveness of the Tier II emission standards, to quantify emissions contributed by commercial preempted handheld equipment, and to explore consumer attitudes toward the effects of the Tier II emission standards.

EF&EE estimated the retail price equivalent (RPE) cost of several of the most promising emission control technologies for hand-held utility equipment. The RPE is an estimate of the change in average sales prices of the equipment, based on an extensive bottom-up cost analysis of the change in manufacturing costs, and taking into account the overheads and markups involved in manufacturing and distribution. The technologies evaluated included changing from two-stroke to four-stroke engines (with and without catalytic converters), and the use of improved two-stroke engines with a catalytic converter. The estimated RPE increases for these technologies ranged from about $14 to $37 per unit, which included incremental costs for engine and equipment changes. These cost increases would be offset by lifetime fuel cost savings of about $151 per unit for equipment used in commercial service, and about $6 per unit for

equipment used by individual homeowners. Based on these estimates, the cost-effectiveness of the Tier II emission standards, compared to retaining the present Tier I standards, was negative for commercial equipment, due to fuel cost saving. For residential equipment, if all lifecycle costs were allocated to reducing HC emissions, the cost per pound of HC eliminated would be about $5, based on the use of the highest incremental RPE (the worst scenario). This is within the range of costs of other emission control measures that have been adopted by ARB.

EF&EE also estimated the emissions from preempted chainsaws, based on a survey of commercial and institutional users such as parks departments and commercial gardening services (use of preempted equipment by individual homeowners was estimated to be negligible). The survey results indicated that 49.4% of the chainsaws in commercial and institutional use fell in the preempted categories. The survey results also indicated that the annual and lifetime hours of usage for commercial chainsaws are higher than the previously published estimates used in ARB's emission inventory, and that the chainsaws last longer as well. Based on the activity data obtained from the survey and ARB's lawn and garden emission inventory, EF&EE estimated that 66% of total chainsaw emissions are from preempted chainsaws. Further, the emissions calculated using the activity data from the survey were about 20% higher than ARB's current emission inventory estimates.

EF&EE subcontracted with a market research company, Freeman, Sullivan & Company (FSC), to undertake a qualitative exploration of attitudes among the residential and business sectors toward the Tier II standards. The primary objective of this research was to obtain overall reactions to the impending standards and to the specific features of the technologies that are likely to be used to meet them. This was done by means of three focus group sessions: two consisting of residential users of hand-held equipment, and one session with commercial and institutional users.

Major points addressed in the focus groups included: equipment usage, attitudes and perceptions toward air pollution, overall reaction to the Tier II emission standards, reactions to various features of prospective Tier II product technology (such as less emission pollutants, reduced fuel consumption, eliminating the need to mix gas and oil, warranty engine coverage, heavier units, more costly units). Most participants agreed that air pollution is a problem, but perceived that the contribution of handheld equipment is minimal. Also, most participants indicated that they would support measures that would improve their personal and/or employee health. While features such as fuel cost saving, eliminating gas and oil mixing and warranty engine coverage were considered somewhat motivating, most participants were concerned about potential drawbacks of these features. Added 20% weight on equipment was generally not perceived as a problem for most of the participants. Nonetheless, some commercial participants claimed it could be a problem for strapless and freehand operation, such as the use of chainsaws in tree trimming. In general, both residential and commercial participants considered that a $35 increase in equipment costs for the new technology would not be a barrier to purchase. While a $50 price increase was the tolerance limit for residential participants, it did not seem to be a problem for the commercial participants.

CONTENTS

ABSTRACT ii

1. SUMMARY 1
   1.1 Background 1
   1.2 Objectives 2
   1.3 Cost-effectiveness of Tier II Emission Standards 2
   1.4 Emissions from Preempted Commercial Chainsaws 3
   1.5 Consumer Attitudes Toward Effects of Emission Standards 5
   1.6 Guide to the Report 8

2. COST-EFFECTIVENESS ANALYSIS 9
   2.1 Cost Analysis for Converting Two-stroke to Four-stroke Engines 9
   2.2 Cost Analysis for Improving Two-stroke Engines 19
   2.3 Cost Analysis for Two-stroke Engines with Catalytic Converter 22
   2.4 Modifications to Handheld Equipment due to Engine Changes 24
   2.5 Cost-Effectiveness Analysis 29

3. EMISSIONS FROM PREEMPTED AND NON-PREEMPTED COMMERCIAL CHAINSAWS 33
   3.1 Population and Usage Survey of Preempted Handheld Equipment 33
   3.2 Emissions from Preempted and Non-preempted Chainsaws 37

4. CONSUMER ATTITUDES ON EFFECTS OF EMISSION STANDARDS 39
   4.1 Research Objectives and Methodology 39
   4.2 Group Recruitment and Composition 39
   4.3 Key Findings 40
   4.4 Detailed Findings 43

5. REFERENCES 58

APPENDIX A: LIST OF CONSTRUCTION AND FARM EQUIPMENT PREEMPTION 61

APPENDIX B: RYOBI PART LISTS 64

APPENDIX C: RELEVANT SURVEY DOCUMENTS 75

APPENDIX D: RELEVANT FOCUS GROUP STUDY DOCUMENTS 90

LIST OF FIGURES

Figure 1: Exploded view of the Ryobi four-stroke engine. 11
Figure 2: Exploded view of a Ryobi two-stroke engine. 12
Figure 3: Displacement versus horsepower for a number of chainsaws. 37

LIST OF TABLES

Table 1: ARB emission standards for handheld equipment engines. 1
Table 2: Summary of results on incremental RPEs, fuel savings and cost-effectiveness. 4
Table 3: Information on the additional parts for the Ryobi four-stroke engine as compared to the two-stroke engine. 10
Table 4: Estimation of manufacturing costs for four-stroke engine parts made in-house. 14
Table 5: Estimation of incremental variable manufacturing cost for four-stroke engine compared to two-stroke engine. 15
Table 6: Estimated fixed costs for converting two-stroke to four-stroke engines for handheld equipment. 16
Table 7: Estimated cost of emission testing. 17
Table 8: Calculation of retail price equivalent (RPE) impact of converting two-stroke to four-stroke engines. 19
Table 9: Estimated fixed costs for two-stroke engines with improved scavenging. 20
Table 10: Calculation of retail price equivalent (RPE) impact of two-stroke engines with improved scavenging. 20
Table 11: Manufacturing costs for additional parts for two-stroke engine with stratified scavenging. 21
Table 12: Estimated fixed costs for two-stroke engines with stratified scavenging. 21
Table 13: Calculation of RPE impact of two-stroke engines with stratified scavenging. . 22
Table 14: Manufacturing costs for additional parts for two-stroke engine with catalyst. . 23
Table 15: Estimated fixed costs for two-stroke engines with catalyst. 23
Table 16: Calculation of retail price equivalent (RPE) impact of two-stroke engines with catalyst. 24
Table 17: Calculation of retail price equivalent impacts of improved engine designs with catalyst. 24
Table 18: Comparison of equipment parts for a two-stroke and a four-stroke engine. . . . 25
Table 19: Estimated fixed costs for equipment design changes required for changing from two-stroke to four-stroke engines. 26
Table 20: Calculation of retail price equivalent impact of equipment changes required to change two-stroke to four-stroke engines. 27
Table 21: Incremental variable costs for handheld equipment equipped with catalyst. . . . 28
Table 22: Incremental variable cost for equipment changes needed to add a catalytic converter. 28
Table 23: Estimated fixed costs for equipment changes needed to add a catalytic converter. 29
Table 24: Calculation of RPE impact of equipment changes needed to add a catalytic converter. 30

Table 25: Cost-effectiveness of ARB Tier II emission standards for commercial handheld equipment. 31
Table 26: Cost-effectiveness of ARB Tier II emission standards for residential handheld equipment. 32
Table 27: Summary of survey responses from Sacramento on commercial chainsaws. . . 35
Table 28: Summary of survey responses from Los Angeles on commercial chainsaws. . . 36
Table 29: Percentage of preempted and non-preempted chainsaws based on survey data. 37
Table 30: Average activity data for commercial chainsaws based on survey data. 37
Table 31: Emission inventories for preempted and non-preempted commercial chainsaws. 38

1. SUMMARY

1.1 Background

The California Air Resources Board (ARB) was required to consider regulating the emissions from off-road mobile sources, including engines used in utility and lawn and garden equipment, by the 1988 California Clean Air Act (CCAA). As a result, ARB has established two tiers of emission standards for utility and lawn and garden equipment engines. Each tier includes two sets of standards: one for non-handheld equipment and the other for handheld equipment. The non-handheld equipment category includes walk behind mowers, riding mowers, pumps and generators, among other equipment types. The handheld equipment category includes, to name a few, leaf blowers, hedge trimmers, string trimmers and chainsaws. The focus of this study is on handheld equipment, and the emission standards for this equipment are shown in Table 1.

While the CCAA required ARB to control emissions from off-road mobile sources, the Federal Clean Air Act Amendments of 1990 (CAAA) include a provision to prohibit any state or political subdivision from regulating emissions from new construction or farm equipment less than 175 horsepower (hp). Because the CAAA did not define which equipment types were to be considered construction or farm equipment, the ARB has worked with various industry associations to reach agreements on what equipment to be exempted[1]. For handheld lawn and garden equipment, the exempted equipment includes, but is not limited to, chainsaws with engine size greater than 45 cc, and blade capable brushcutters and clearing saws with engine size

Table 1: ARB emission standards for handheld equipment engines.

Handheld Equipment				
Emissions (g/BHP-hr)	THC	NOx	CO	PM
1995 - 1998 (Tier I)				
< 20 cc	220	4.0	600	-
20 - 50 cc	180	4.0	600	-
≥ 50 cc	120	4.0	300	-
1999 on (Tier II)	50	4.0	130	0.25[1]

[1] PM standard is for diesel and 2-stroke engines only.

[1] Refer to Appendix A for a list of preempted construction and farm equipment.

greater than 40 cc. These types of equipment are widely used by commercial and institutional lawn and tree service organizations, as well as in agriculture.

The Tier I emission standards took effect in 1995, and have required mainly simple engine and carburetor modifications. The more stringent Tier II emission standards will take effect in 1999, and are considered technology-forcing. Potential technological approaches to meet the Tier II emission standards include, but are not limited to, two-stroke engines with a better or advanced scavenging process and catalytic converter, and changing from two-stroke engines to four-stroke engines. Since advanced two-stroke engines and four-stroke engines are likely to include more components than present engines, they are likely to be somewhat heavier and more expensive. However, they will have much lower pollutant emissions than conventional two-stroke engines.

1.2 Objectives

Since the adoption of the utility equipment emission standards, manufacturer concerns about the Tier II emission standards have led ARB to reassess their feasibility and cost-effectiveness. As a result of discussions with the handheld equipment industry and other interested parties, ARB recently proposed to amend the Tier II emission standards to address some of these concerns. The proposed amendments include a combined HC+NOx standard, retention of the Tier I CO standard, and durability requirement. None of these proposed amendments has been formally adopted yet.

While negotiating with the industry, ARB is continuing to reassess the emission standards. This study is a part of that reassessment. It builds on the results of our previous study of two-stroke engine emission control technology for ARB (Chan and Weaver, 1996).

The objectives of the present study were to:

1) assess the cost-effectiveness of the Tier II emission standards for commercial and residential handheld equipment based on a bottom-up cost analysis;

2) quantify the extent to which chainsaw emissions from commercial activities in urban areas of California are due to preempted equipment; and

3) explore consumer attitudes toward the effects of the Tier II emission standards (i.e. emission benefits, costs etc.) by means of a focus group study.

1.3 Cost-effectiveness of Tier II Emission Standards

EF&EE estimated the cost-effectiveness of the Tier II emission standards based on the incremental retail price equivalent (RPE) of promising technologies, and the resulting emission reductions. The promising technologies investigated were improved two-stroke engines with catalytic converter, and conversion from two-stroke to four-stroke engines with a catalytic

converter. Two approaches to improving two-stroke engines were examined: improved scavenging and stratified scavenging. Fuel injection technology was investigated in our previous study for ARB, but was excluded from this study due to its high costs and the fact that it considered further from the production stage than other options.

EF&EE used a bottom-up cost analysis to estimate the incremental costs of each of the emission control technologies. This included estimating the variable costs, such as material and labor costs, and the fixed costs, such as tooling and R&D costs. Since the fixed costs per engine are strongly affected by the production volume, cost estimates were developed based on a representative sales volume in California. Cost estimates were developed both for the changes required to the engine itself and for ancillary changes required to the rest of the equipment to accommodate the changes made in the engine.

With these incremental manufacturing cost estimates, EF&EE estimated the incremental RPE of handheld equipment using each of the promising technologies. The RPE estimation followed the methodology developed by EF&EE for EPA (Chan et. al., 1996). The dealer's and manufacturer's makeups used to develop the RPE estimate were obtained from industry, and were confirmed by analyzing the data for the lawn and garden equipment industry in the 1992 Census of Manufactures. The estimated RPE increase in the engines ranged from $11 to $33 per unit, and RPE increase in the equipment ranged from $2.80 to $3.50, for a total RPE increase of $14 to $37.

Any of the technologies that we investigated would also reduce fuel consumption by about 30% (representing that portion of the fuel that is presently wasted out the exhaust in the form of HC emissions). Thus, the life-cycle costs of these technologies to the consumer would be less than the initial incremental RPE. For commercial users, the lifetime fuel saving would be about $151 per unit, or several times the incremental cost of the emission control. For residential users, the fuel saving would be about $6.

EF&EE estimated the cost-effectiveness of the Tier II emission standards. This calculation used the emission reduction due to meeting the Tier II standards, as compared to the Tier I standards, as well as the highest incremental RPE among the technologies investigated. For commercial equipment, the costs were negative, as the fuel saving would outweigh the higher initial cost. For residential equipment, if all lifecycle costs were allocated to reduce HC emissions, the cost per pound of HC eliminated would be about $5, based on the use of the highest incremental RPE (the worst scenario).

Table 2 summarizes the results on the incremental RPEs for different technologies, and fuel savings and cost-effectiveness for commercial and residential equipment.

1.4 Emissions from Preempted Commercial Chainsaws

As discussed previously, chainsaws with engine size greater than 45 cc, and blade capable brushcutters and clearing saws with engine size greater than 40 cc are exempt from ARB

Table 2: Summary of results on incremental RPEs, fuel savings and cost-effectiveness.

Incremental Costs for Different Technologies						
	Improved Scavenging w/ Catalyst		Stratified Scavenging w/ catalyst		2-stroke to 4-stroke w/ catalyst	
	Ceramic	Metallic	Ceramic	Metallic	Ceramic	Metallic
Retail Price Equivalent for Engine ($)	10.56	15.93	12.96	18.32	27.98	33.34
Retail Price Equivalent for Equipment ($)	2.80				3.14 to 3.53	
Fuel Saving						
	Commercial			Residential		
Saving on Fuel Cost ($)	151			6		
Cost-Effectiveness						
	Commercial			Residential		
All Costs Allocated to HC Emissions without Fuel Saving ($/lbs)	0.19			4.66		
All Costs Allocated to HC Emissions with Fuel Saving ($/lbs)	-0.60			3.87		

emission regulations due to the federal preemption. While ARB has estimated the total emissions from handheld equipment, there is a lack of information on fraction of the emissions from handheld equipment that are due to equipment in the preempted categories.

EF&EE has quantified the emissions from chainsaws covered by the federal preemption used in commercial lawn and garden activities in urban areas of California (use of preempted equipment by individuals is considered to be negligible, as the sizes and costs of the preempted equipment are considerably larger than those of typical consumer equipment).

To quantify preempted equipment usage, EF&EE carried out a survey of representative landscape and tree service providers and institutional users of handheld equipment in the Sacramento and Los Angeles areas. EF&EE began by calling potential candidates, such as tree service companies, utility companies, and city park departments in the Sacramento and Los Angeles areas to ask about their willingness to participate. For those who expressed willingness, EF&EE sent or faxed them a survey form. The information requested in the survey included the number, make, model and engine size of chainsaws, brushcutters or clearing saws used by each organization. The age of the equipment and the number of usage hours were also requested.

After receiving the survey forms back from the participants, EF&EE reviewed the information thoroughly, and the technical specifications were checked and compared with those published by the respective manufacturers. Follow-up phone calls were also made to clarify information on usage hours and equipment replacement time.

The survey responses indicated that none of the participants owned or operated any brushcutters or clearing saws with engine sizes more than 40 cc. The results of the survey also indicated that 49.4% of the 261 units of chainsaws reported by the participants were in the preempted

category. The average engine size and horsepower were determined to be 73 cc and 5.2 hp for the preempted, and 35 cc and 2.5 hp for non-preempted chainsaws. The average annual hours of use were 500 for the preempted chainsaws, and 512 for the non-preempted. The average age was four years for the preempted chainsaws, and six years for the non-preempted chainsaws. The survey results also indicated that the average replacement time was six years for preempted chainsaws, and 7.8 years for the non-preempted chainsaws. This yielded an average equipment life of 2,104 hours for preempted chainsaws, and 3,521 hours for non-preempted chainsaws. Although these estimates of average lifetime usage were two to three times those used by ARB in its emissions inventory, they are consistent with the information that we obtained from the focus group study, which is discussed in the next section.

Using the average activity data, along with the best available emission and population data, the preempted chainsaws were estimated to contribute about 66% of the total commercial chainsaw emission inventory. Also, the total commercial chainsaw emission inventories estimated using the data from the survey were about 20% more as compared to the estimates published by ARB. The difference was mainly due to the differences in the average horsepower and annual usage hours (3.8 hp and 506 hours for the survey, and 4.0 hp and 405 hours for the ARB's estimates).

1.5 Consumer Attitudes Toward Effects of Emission Standards

EF&EE subcontracted with a market research company, Freeman, Sullivan & Company (FSC), to undertake a qualitative exploration of attitudes among the residential and business sectors toward the Tier II standards. The primary objective of this research was to obtain overall reactions to the impending standards and to the specific features of the technologies that are likely to be used to meet them. This was done by means of three focus group sessions: two consisting of residential users of hand-held equipment, and one session with commercial and institutional users.

All focus group sessions were audio and video recorded. Participants for the two residential groups were recruited from the general population in the Sacramento area. Ten residential participants were recruited for each session, but seven participants actually showed up in each session. For the commercial group, the participants were also recruited from the Sacramento area based on Yellow Pages listings. Ten participants were recruited, but only six showed up in the session. All of these participants, except one, were from private sector firms.

Some of the major elements in the discussion guide were as follows:

- Equipment types, usage and replacement time
- Attitudes and perceptions toward air pollution
- Overall reaction to Tier II emission standards
- Reactions to various features with prospective Tier II product technology
    - less pollutant emissions
    - reduced fuel consumption
    - eliminating procedure of mixing gas and oil (four-stroke technology only)

- warranty engine coverage
- heavier units
- more costly units

- Expected behavior

The key findings from these focus groups were as follows:

Equipment Types, Usages and Replacement Time

Most residential participants owned string trimmers. Some owned chainsaws, hedge trimmers and/or blowers. Most of these participants used their equipment about an hour a week. Most of these participants had the equipment for more than three years.

Most commercial participants owned a number of string trimmers, hedge trimmers and chainsaws. Some of them owned backpack blowers. Most commercial participants indicated that their equipment lasts about two to three years. Some indicated that smaller units used more often (five days a week and eight hours a day) last about a year.

Attitudes and Perceptions Toward Air Pollution

Most residential participants contended that there was some air pollution in greater Sacramento, although not to the extent that they are overly concerned. In fact, most of these participants admitted they have not made any efforts to improve the quality of air.

Generally, commercial participants agreed that air pollution is a problem in the Sacramento area. Commercial participants perceived air pollution in Sacramento to be somewhat more of a problem than residential participants. Most commercial users claimed they have made some efforts to improve the quality of air, e.g., planting trees, etc.

Both types of participants believed that the pollution generated by two-stroke lawn and garden equipment is insignificant, especially when compared to other areas, e.g., autos, agricultural burning, industry, etc.

Overall Reaction to Tier II Emission Standards

Most participants agreed that the new Tier II proposed technology would improve air quality. Without a detailed explanation of the proposed technology, a number of participants raised questions about it.

Many were concerned, especially residential participants, that prices would be higher for the new equipment. Commercial participants asked about retrofitting equipment and continued availability of parts for current units. Commercial participants also were curious as to what type

of monitoring practices would be established to ensure that the equipment is conforming to standards.

Reactions to Various Features with Prospective Tier II Product Technology

Most of the features for the proposed new technology did not produce a favorable disposition toward the impending regulation.

Less pollutant emission - Residential users believed this was a benefit from a personal perspective, although a number do not consider the operation of this equipment as posing any risk to their health because they either use these tools infrequently or take precautions (e.g., face mask).

Commercial participants believed that their industry is an inconsequential contributor to air pollution and, as such, were not motivated by this reason. However, several believed that improving the health of their employees is something they would support.

Reduced fuel consumption - This was not a compelling feature for either type of participant. Residential users claimed they use very little fuel each season. The potential of saving $150 for commercial participants was considered insignificant relative to their fuel expenses.

Eliminating procedure of mixing gas and oil - This feature was not very attractive to residential users and, in fact, a drawback for the commercial segment. Residential users usually do the mixing process only once a season, which they did not view as tedious. Commercial participants claimed that having both two-stroke and four-stroke units will greatly increase the probability of their employees incorrectly fueling the various pieces of equipment, which would cause engine damage.

Warranty engine coverage - This potential feature was not very motivating and generated several issues and concerns. Some expressed doubt on the benefits of any product warranty. Many expected to pay a premium for the inclusion of a warranty. Some were uncertain who would determine if the unit no longer met requirements.

Heavier units - Most residential users did not perceive a hand-held unit weighing up to 20% more as problematic. Most commercial users claimed this was a major issue, particularly for the versions that are usually strapless and operated free-hand, i.e., chain saws and hedge trimmers.

More costly units - The expected increase of about $35 for new technology versus a comparable unit available today was judged to be reasonable and not a barrier to purchase. In fact, commercial participants would be willing to pay a $50 increase for units in the $700 to $900 range.

Expected Behavior

By and large, most participants, residential and commercial alike, will abide by the new emission regulations and purchase the new products only when their current units must be replaced. Most participants strongly agreed that they would not purchase the new technology before their current units have expired.

1.6 Guide to the Report

This report documents the results of the project. Chapter Two presents the results of the cost-effectiveness analysis for the Tier II emission standards based on a bottom-up cost analysis. Chapter Three presents the findings on the emission contribution from the preempted handheld equipment. Chapter Four presents the findings for the focus group study on the consumer attitudes toward the effects of the Tier II emission standards. Finally, references are listed in Chapter Five.

2. COST-EFFECTIVENESS ANALYSIS

This chapter presents the results of our cost-effectiveness analysis of the Tier II emission standards. The potential technologies used in the analysis were identified in our previous study for ARB (Chan and Weaver, 1996). These technologies were conversion from two-stroke to four-stroke engines and improved two-stroke engines with the use of catalytic converters. Although it was considered in the previous study, the use of fuel-injection technology in two-stroke engines was excluded in this analysis, due to its costs and the belief that the technology is not as close to the production stage as other options.

2.1 Cost Analysis for Converting Two-stroke to Four-stroke Engines

This section presents the cost analysis for converting two-stroke engines used in handheld equipment to four-stroke engines. This includes estimates of the incremental variable manufacturing costs (e.g. materials and assembly labor) and fixed costs (e.g. tooling and engineering design) due to the change from two-stroke to four-stroke engines. Since the fixed costs per engine are strongly affected by the production volume, cost estimates were developed based on a representative sales volume in California for a major manufacturer.

Comparison of Two-stroke and Four-stroke Engines

Four-stroke engines tend to have more engine parts than two-stroke engines, due to the need for a valve train assembly to control the flow of air/fuel mixture into the combustion chamber and the flow of exhaust gases out of the chamber. In two-stroke engines, these functions are accomplished by the piston covering and uncovering ports in the cylinder wall. The valve train assembly adds substantially to the parts count, as well as to the weight of the engine. In order to estimate the incremental cost of converting two-stroke engines to four-stroke engines, it was necessary first to characterize the differences between them. Using data developed in one of our previous study for ARB (Chan and Weaver, 1996), we were able to determine the number of additional parts, the difference in material requirements, and the differences in machining operations used to produce each part for a small four-stroke engine and a small two-stroke engine.

Table 3: Information on the additional parts for the Ryobi four-stroke engine as compared to the two-stroke engine.

Item	Unit	Manufacturing Process	Part Material	Weight (lb)
Rocker Box Cover	1	stamping	low-carbon steel	5/64
Rocker Arm	2	stamping	low-carbon steel	1/64
Push Rod	2	precision grinding	low-carbon steel	1/64
Push Rod Guide	2	stamping	low-carbon steel	1/128
Rocker Box	1	die casting	Al alloy	7/64
Oil Pan	1	die casting	Al alloy	1/4
Cam Bracket	1	powder metal	low-carbon steel	3/64
Cam Follower	2	powder metal	low-carbon steel	1/64
Cam Gear	1	powder metal	low-carbon steel	1/8
Crank Gear	1	powder metal	low-carbon steel	1/64
Valve Cover Gasket	1	Purchase from suppliers		
Lock Screw	2			
Pivot Nut	2			
Spring Retainer	2			
Valve	2			
Spring	2			

The four-stroke engine that we investigated was the one used in the Ryobi Model 920 string trimmer. The Ryobi engine is the only production four-stroke engine that is presently used in handheld equipment in the U.S. Nonetheless, Honda in Japan has recently announcing that small four-stroke engines will be commercially available for handheld equipment in Japan. The two-stroke engine that we used for comparison was the one in the Ryobi Model 720 string trimmer. Exploded views of these engines are shown in Figure 1 and Figure 2, respectively. The parts lists for these engines were also obtained from a distributor, and are included in Appendix B.

Recently, Conley et al. (1996-1, 1996-2, 1996-3) have published three papers on the research, design and development, as well as the emission and performance characteristics, of the Ryobi four-stroke engine. The information in these papers was also used in our cost analysis, along with the data we developed.

<u>Additional parts</u> - After disassembling the engines, we counted and recorded the parts found in each one. Using this information, which was confirmed against the parts lists in Appendix B, we compiled a list of major parts used in the four-stroke engine that were not found in the two-stroke engine. This list is shown in Table 3. The only major part found in the two-stroke but not in the four-stroke engine was the reed valve assembly in the intake system. We did not include this in our analysis to off-set other minor parts (e.g. washers, screws etc) that were found in the four-stroke engine but not in the two-stroke. For each of the parts in Table 3, we estimated whether it would be more cost-effective to make or purchase. The small parts, such as pivot screws and nuts, were assumed to be purchased, while the bigger and more specialized parts such as the rocker cover, rocker arms, push rod, push rod guide, cam gear and so on

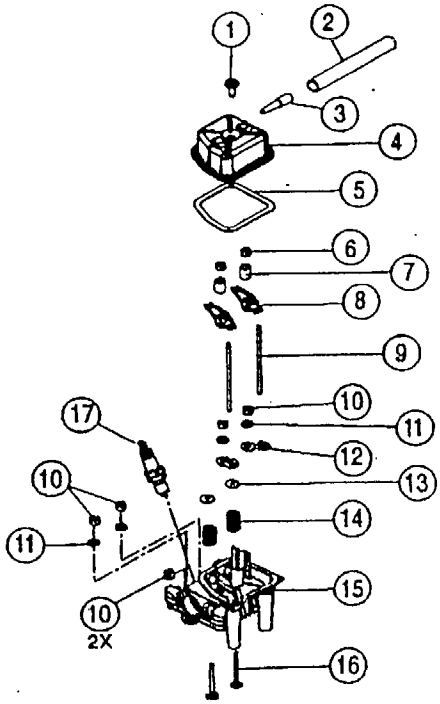

Item	Part No.	Description
1	181025	Screw, Valve Cover
2	181026	Hose, Breather
3	181027	Breather Assembly
4	181028	Cover, Valve
5	181029	Gasket, Valve Cover
6	181030	Nut, Rocker Adjusting
7	181031	Pivot, Rocker Arm
8	181032	Arm, Rocker
9	181033	Rod, Push
10	181034	Nut, Hex 5M
11	181035	Washer
12	181036	Guide, Push Rod
13	181037	Retainer, Valve Spring
14	181038	Spring, Valve
15	181039	Head, Cylinder
16	181040	Valve
17	160852	Spark Plug
*	181041	Cylinder Head Assembly (items 13-16)
*	181042	Short Block Assembly (all items from pages 2 & 3)

* not shown

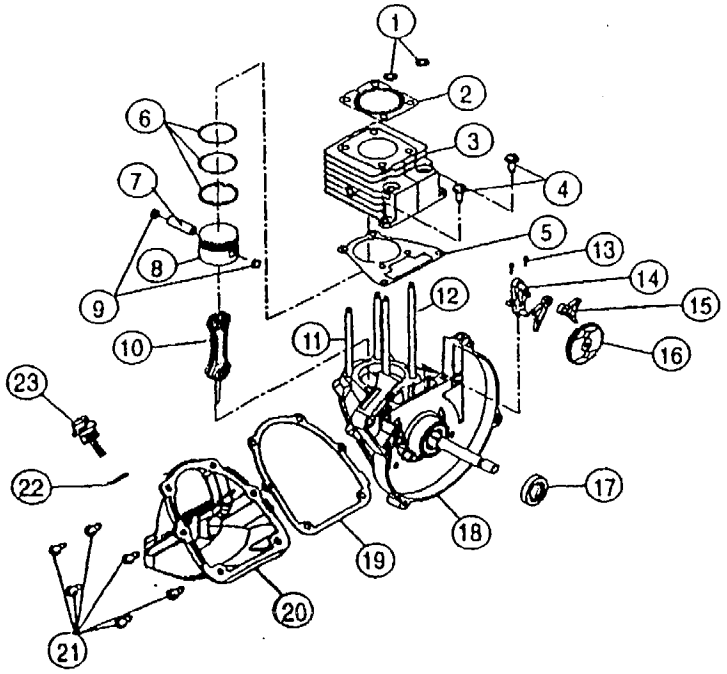

Item	Part No.	Description
1	181000	O-Ring, Push Rod Tube
2	181001	Gasket, Cylinder Head
3	181002	Cylinder
4	181003	Screw, M5 X 18.7mm
5	181004	Gasket, Cylinder
6	181005	Piston Ring Set
7	181006	Pin, Wrist
8	181007	Piston
9	181008	Button, Wrist Pin
10	181009	Rod, Connecting
11	181010	Cylinder Stud (83.5mm)
12	181011	Cylinder Stud (115.5mm)
13	181012	Screw, Cam Bracket
14	181013	Bracket, Cam

Item	Part No.	Description
15	181014	Follower, Cam
16	181015	Cam Gear
17	181016	Seal
18	181017	Crankcase W/Power Shaft (includes items 11, 12 & 17)
19	181018	Gasket, Oil Pan
20	181019	Pan, Oil
21	181020	Screw, M5 X 15.8mm (8 required)
22	181021	O-Ring
23	181022	Plug, Oil Fill (includes item 22)
*	181023	Piston and Rod Assembly (items 6-10)
*	181024	Engine Gasket Kit

* not shown

Figure 1: Exploded view of the Ryobi four-stroke engine.

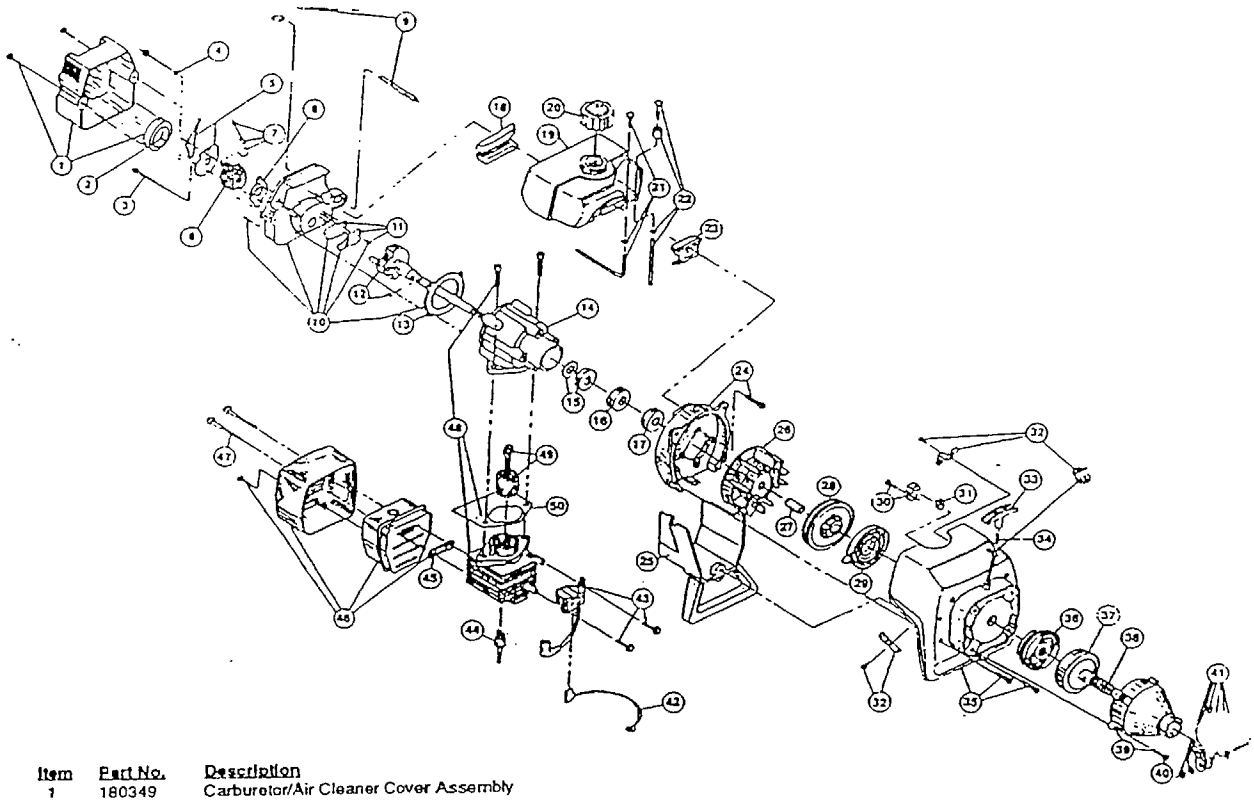

Item	Part No.	Description
1	180349	Carburetor/Air Cleaner Cover Assembly (includes item 2)
2	180350	Air Cleaner Filter
3	180351	Carburetor Mounting Screw Assembly
4	180352	Wavey Washer
5	180353	Choke Lever and Plate
6	180527	Carburetor Assembly
7	682048	Throttle Adjustment Assembly (Walbro)
7	180092	Throttle Adjustment Assembly (Zama)
8	610675	Carburetor Gasket (10 pack)
9	683974	Primer and Hose Assembly
10	180354	Carburetor Mount Assembly (includes items 11 and 13)
11	147573	Reed Assembly
12	180022	Power Shaft Assembly
13	612115	Carburetor Mount Gasket (10 pack)
14	180026	Crankcase Service Assembly (items 12, 14-17)
15	682041	Inner Bearing Assembly
16	610309	Seal
17	610308	Outer Bearing Assembly
18	612134	Rear Mounting Pad
19	147580	Fuel Tank Assembly (includes items 20-22)
20	180000	Fuel Cap Assembly
21	147290	Return Line Assembly
22	682039	Fuel Line Assembly
23	145308	Front Mounting Pad
24	153520	Shroud Assembly
25	683078	Shroud Extension and Stand
26	180929	Flywheel Assembly
27	145918	Spacer
28	180535	Recoil Pulley Assembly
29	613102	Recoil Spring
30	180930	Pulley Retainer Assembly
31	611061	Rope Guide
32	180035	Switch Assembly
33	610300	Pull Handle

Item	Part No.	Description
34	613103	Rope
35	180101	Starter Housing Assembly
36	153591	Clutch Rotor Assembly
37	153592	Clutch Drum Assembly
38	612468	Spring
39	683601	Clutch Cover Assembly
40	145888	Clutch Cover Screw Assembly
41	153597	Upper Clamp Assembly
42	180036	Wire Lead
43	683390	Module Assembly
44	610311	Spark Plug
45	610672	Exhaust Gasket (10 pack)
46	180119	Muffler Assembly
47	147575	Muffler Mounting Bolt Assembly
48	180063	Cylinder Assembly
49	147012	Piston and Rod Assembly
50	610674	Cylinder Gasket (10 pack)
•	180034	Engine Hardware Kit
•	180011	Engine Gasket Kit
•	153308	O.E.M. Carburetor Repair Kit (Walbro)
•	180090	O.E.M. Carburetor Repair Kit (Zama)
•	153309	Gasket-Diaphragm Repair Kit (Walbro)
•	180091	Gasket-Diaphragm Repair Kit (Zama)
•	180530	Piston Ring
•	180027	Short Block Assembly (items 12, 14-17, 48-50)
•	610676	Flywheel Key (10 pack)
•	147544	Starter Housing Screw Set

• not shown

Figure 2: Exploded view of a Ryobi two-stroke engine.

would most likely be made in-house. For those parts that we assumed the manufacturer would produce, we weighed the parts and determined the manufacturing processes required. This information is also presented in Table 3.

Other differences in parts - Besides the additional parts, there are also differences in manufacturing processes and requirements for similar components when comparing two-stroke and four-stroke engines. Significant differences in terms of manufacturing processes and material requirements were observed in the cylinder head and cylinder block. The cylinder head and cylinder for small two-stroke engines are generally made as one unit, while four-stroke engines have a separate cylinder head. The weight of the four-stroke cylinder/head assembly was found to be about 5/16 lb more than that for the two-stroke engine. This information was used later to estimate the added material cost for these components.

Cost Analysis

The cost analysis includes an estimate of the variable and fixed costs for large production volumes in California. In our previous study for the ARB (Chan and Weaver, 1996), we determined that the average annual engine sales for handheld equipment in California is about 500,000 units, and that there are twelve manufacturers that certify their products with ARB. Out of these twelve manufacturers, we assumed that the seven largest manufacturers would devote major R&D efforts to develop engines that meet the Tier II emission standards. The smaller manufacturers would be most likely to depend on suppliers and/or licensing available technologies, and would assign only a few of their own staff to this effort. Dividing the average sales of 500,000 units by seven manufacturers yielded roughly 70,000 units per manufacturer. Therefore, production of 70,000 units per year was assumed in this cost analysis.

Variable manufacturing costs (materials, components, and labor) - Table 4 shows our estimate of the production costs for the parts that would be produced in-house. Table 5 shows our estimate of the total change in variable manufacturing costs per engine due to the change from two-stroke to four-stroke. In addition to the costs of manufacturing the parts shown in Table 4, the total change in variable costs also includes the purchase cost of those additional parts obtained from outside suppliers. Our estimates of the prices for each of these are shown in Table 5. Purchase cost estimates were discussed with knowledgeable industry sources, who confirmed their accuracy (Conley, Huffman 1996).

In addition to the increased costs of parts, we estimate that the more complex cylinder head and the new valve train would require three extra minutes of assembly labor, costing $1.05 with overhead. The total change in variable manufacturing costs, therefore, comes to $9.93.

Fixed costs - Our estimates of fixed costs are presented in Table 6. Although Ryobi is selling four-stroke engines in handheld equipment, and Honda has announced that it will have one four-stroke model for handheld equipment in 1997, other engine manufacturers will still require quite extensive research, design and development work before they can market their own four-stroke engines for handheld equipment. This is especially true for those handheld engine manufacturers that have been dealing with only two-stroke engines for decades.

Table 4: Estimation of manufacturing costs for four-stroke engine parts made in-house.

Part	Valve Cover	Rocker Arm	Push Rod	Push Rod Guide	Rocker Arm Box	Oil Pan	Cam Bracket	Cam Follower	Cam Gear	Crank Gear	Cylinder Head & Cylinder	Total
Process	Stam-ping	Stam-ping	precision grinding	Stam-ping	Die -casting	Die -casting	Powder Metal	Powder Metal	Powder Metal	Powder Metal	Die Casting	n/a
Material	L.C. Steel	L.C. Steel	L.C. Steel	L.C. Steel	Al Alloy	Al Alloy	L.C. Steel	L.C. Steel	L.C. Steel	L.C. Steel	Al Alloy	n/a
Weight (lb)	0.313	0.016	0.016	0.008	0.438	0.250	0.047	0.063	0.125	0.063	0.320	1.656
Wgt+10% Scrap (lb)	0.344	0.017	0.017	0.009	0.481	0.275	0.052	0.069	0.138	0.069	0.352	1.822
Material Cost ($/lb)	0.40	0.40	0.40	0.40	1.00	1.00	0.40	0.40	0.40	0.40	1.00	n/a
Material Cost ($/part)	0.138	0.007	0.007	0.003	0.481	0.275	0.021	0.028	0.055	0.028	0.352	1.394
Labor Minutes	0.5	0.5	1.5	0.5	0.5	0.5	0.5	0.5	0.5	0.5	3	9.0
Labor Cost $/hr	15	15	25	15	15	15	15	15	15	15	25	n/a
DL Cost $/part	0.13	0.13	0.63	0.13	0.13	0.13	0.13	0.13	0.13	0.13	1.25	3.00
Overhead @40%	0.05	0.05	0.25	0.05	0.05	0.05	0.05	0.05	0.05	0.05	0.50	1.20
Total cost/part	0.18	0.18	0.88	0.18	0.18	0.18	0.18	0.18	0.18	0.18	1.75	4.20
Total mfg. cost/part	**0.31**	**0.18**	**0.88**	**0.18**	**0.66**	**0.45**	**0.20**	**0.20**	**0.23**	**0.20**	**2.10**	**5.60**

[1] Incremental manufacturing cost compared to two-stroke engine components

[2] Given the relatively small contribution of material cost to the incremental cost, it was not expected that any volume savings would appreciably change the incremental costs.

The development work required to convert a two-stroke engine to four-stroke operation was estimated to require about three engineer-years of effort, costing about $300,000 with overheads. The estimated cost was based on information from Ryobi's experience, and the assumption that the next manufacturers will benefit (i.e., less engineering design) from Ryobi's effort. The costs for the emission testing would also be fairly high, since it would require more testing to develop a new engine than to improve an existing one. We estimated that the development would require 500 emission tests. Also, we estimated the manufacturer's cost per test at about $300, based on the analysis in Table 7. This is also consistent with the lower end of the range of testing costs obtained in discussions with several independent test laboratories. At $300 per test, the 500 emission tests would cost about $150,000. Additional engineering-related costs of $100,000 were estimated to cover prototype development, test engines, travel, test materials and similar costs. The total engineering cost was estimated at $550,000.

Changes in the engine hardware would require corresponding changes in the company's technical support services - service manuals, technical training, etc. A source at Honda (1996) indicated that the costs of completely revising technical documentation and training dealers for a major engine change were of the order of $500,000, while the costs of issuing a technical bulletin for a minor change were around $10,000. These estimates were based on a high volume model (400,000 to 500,000 units). Therefore, based on this information, we estimated the technical

support costs for the two-stroke to four-stroke conversion at $200,000 for a 70,000-unit production. The cost is lower as the manufacturer would have fewer manuals to print and fewer dealers to train.

Table 5: Estimation of incremental variable manufacturing cost for four-stroke engine compared to two-stroke engine.

	Cost/Piece	Pieces/Engine	Total
Rocker Box Cover	0.31	1	0.31
Rocker Arm	0.18	2	0.36
Push Rod	0.88	2	1.76
Push Rod Guide	0.18	2	0.36
Rocker Box	0.66	1	0.66
Oil Pan	0.45	1	0.45
Cam Bracket	0.20	1	0.20
Cam Follower	0.20	2	0.41
Cam Gear	0.23	1	0.23
Crank Gear	0.20	1	0.20
Valve Cover Gasket	0.25	1	0.25
Lock Screw	0.05	2	0.10
Pivot Nut	0.10	2	0.20
Spring Retainer	0.05	2	0.10
Valve	0.50	2	1.00
Spring	0.25	2	0.50
Cylinder Head & Cylinder	2.10	1	2.10
Total Parts Cost			8.88
Added Assembly Labor			
Labor minutes			3
Labor Cost $/hr			15
Direct Labor $			0.75
Overhead @40%			0.3
Total Labor + OH			1.05
Total Added Variable Manufacturing Cost			**9.93**

Tooling costs would include the costs of new master dies for die-casting the cylinder head, cylinder block, oil pan, connecting rod, piston, and crankshaft; and new stamping dies for the rocker cover, rocker arm, and push rod guide. New molds would also be needed for powder metal forming of the cam bracket, cam follower, cam gear and crank gear. After discussing with some die-casting manufacturers (Spec Cast, Prince Machine, and Muller Weingarten, 1996), we estimate these costs at $30,000 for the more complex cylinder head and block, $15,000 for the crankshaft and oil pan, and $10,000 for the much simpler connecting rod and piston castings. New masters would be required for the stamping dies for the new stamped parts. Based on our conversations with stamping die manufacturers (Hess-MA-E, and Sheffield Progressive, 1996), we estimate a cost of $10,000 each for the rocker cover, rocker arm, and push rod guide dies. Molds for powder-metal forming are less expensive than die-casting or stamping, ranging from $3,500 to $8,000 (Monaich, 1996). We assumed the mid-range of
$5,000 each for all dies for the power-metal parts.

Note that we have not included any costs for the actual production of new casting dies, but only the master designs from which the dies are produced. That is because casting dies wear out and must be replaced periodically in any event, so that their replacement with a new design would not necessarily involve any incremental cost except for the new master.

Changing parts, and adding new parts and assembly procedures would also make it necessary to change fixtures, jigs and material handling equipment, and to modify production line flows. The costs for these changes include mostly labor and engineering time, retraining costs, and the costs of lost production while the assembly line is down. These are lumped together as "setup" costs. Setup costs are difficult to estimate as they are highly plant- and process-specific. We estimate these costs at $50,000 based on our judgement on the complexity of the changes needed. Thus, the total tooling costs would amount to about $210,000. Adding the engineering costs, technical training and support costs, and the tooling costs yield a total engine specific cost of $960,000. These costs were amortized over five years at a cost of capital of 9%. The total amortized fixed costs amount to about $247,000 per year.

Table 6: Estimated fixed costs for converting two-stroke to four-stroke engines for handheld equipment.

Engineering Costs	
Engineering labor + OH (3 years @ $100,000)	300,000
Number of Tests	500
Test Cost ($)	300
Testing costs	150,000
Other engineering	100,000
Total Engineering	550,000
Technical support	
Training/Tech. Pubs	200,000
Tooling Costs	
New Master Dies	
Cylinder head	30,000
Cylinder block	30,000
Connecting rod	10,000
Piston	10,000
Crankshaft	15,000
Rocker Cover	10,000
Rocker Arm	10,000
Push Rod Guide	10,000
Oil Pan	15,000
Cam Bracket	5,000
Cam Follower	5,000
Cam Gear	5,000
Crank Gear	5,000
Setup changes	50,000
Total tooling	210,000
Total Engine-Specific	960,000
Amortized over 5 yrs	246,809
New Machine Tools	730,000
Amortized over 10 yrs	111,258
Total Fixed Cost/Yr	358,066
Annual Production	70,000
Fixed cost/engine	**5.12**

In addition to the engine-specific costs, the production of the new parts in-house would require that some new machine tools be purchased (assuming that all existing machine tools are fully utilized). Assuming a throughput of two parts per press per minute for a typical die-casting or stamping machine, and the presses operating two shifts for a total of 14 hours per workday for 250 workdays per year, one machine would produce about 420,000 parts annually. Thus, one machine would be sufficient to support about five 70,000-unit production lines or to produce five parts for the 70,000-unit production, with some extra capacity to account for downtime due to die changing, process changes etc.

Thus, for this 70,000-unit production line, we estimate that one new 50-ton stamping press at a cost of $50,000 (Hess-MAE, 1996) would be required for the stamped parts, and one CNC grinder or machine at a cost of $40,000 (Kreager, and Seway 1996) for the push rods and other additional machining. Also, one fifth of a new 600-ton die-casting machine at a cost of $365,000 (Prince Machine, 1996),

or $73,000, would be required for the added and more complex cylinder head. The extra machine time for this new die-casting machine would be used for producing other die casting parts for other engine lines. The powder-metal parts, it would require one powder-metal forming machine at a cost of $190,000 (Fulesday, 1996), and one sintering furnace at a cost of $300,000 (C.I. Hayes, 1996). Powder-metal hoppers and handling equipment would add about $77,000, for a total cost of $730,000. Amortizing these costs over a ten-year period at a 9% capital rate, the new machine costs per year were $111,000. Summing all the fixed costs and dividing by the number of units produced results in fixed costs of $5.12 per engine for converting two-stroke to four-stroke engines for a 70,000-unit production line.

Table 7: Estimated cost of emission testing.

Capital Cost	
Analyzer bench	100,000
Dynamometer	50,000
Test cell	50,000
Misc. Instruments	60,000
Total Capital Cost	260,000
Amortized 5 yrs @ 9%	66,844
Operating Costs	
Test engineer (1/2)	50,000
Technician	60,000
Supplies/Repairs	40,000
Total Annual Cost	216,844
Tests/day	3
Tests/yr	750
Cost/test	289

<u>Retail-Price Equivalent</u> - To bring some order and reproducibility to cost estimates of emission control systems, EPA has developed a standard retail price equivalent (RPE) technique (Jack Faucett Associates, 1985). EPA's RPE methods were first outlined by Lindgren (Lindgren ,1978) in a study done for EPA in 1978, and refined by Putnam, Hayes, and Bartlett (PHB, 1984). The basic equation for the retail price equivalent (RPE) of a given vehicle or engine modification is given by:

$$RPE = ((SP + AL + AO) * MM + RD + TE + WC) * DM$$

where:

RPE is the retail price equivalent;

SP is the supplier price charged to the auto assembler for the components and subassemblies involved;

AL is the direct cost of assembly labor for installing the components;

AO is the manufacturer's assembly overhead cost per unit;

MM is the manufacturer's markup factor (1 + manufacturer's markup percentage), to account for corporate overhead and profit;

RD is the manufacturer's research and development cost per unit;

TE is the manufacturer's tooling cost per unit

WC is the manufacturer's added warranty cost, per unit; and

DM is the dealer's markup factor (1 + dealer's markup percentage).

To calculate the retail price equivalent impact of the change from two-stroke to four-stroke engines, we needed estimates of typical manufacturer and dealer markups. To determine typical dealer markup percentages, we contacted the North American Equipment Dealers' Association. According to an association spokesperson, the typical dealer markup for utility equipment ranges from 16 to 30 percent, with the lower range being typical of "consumer" equipment, and the upper range being typical for "professional" grade units. The typical markup has declined substantially in recent years, due to competition from warehouse stores and other large-volume retailers. We assumed a dealer markup at the low end of the range cited, or 16%, as the consumer market is more sensitive to price changes.

The Portable Power Equipment Manufacturers' Association was contacted for information about manufacturer markups. According to the PPEMA spokesperson contacted, typical manufacturer's markup is from 5 to 10% over costs. We also analyzed the data for the lawn and garden equipment industry in the 1992 Census of Manufactures. These data showed that, for the lawn and garden equipment industry as a whole, variable production costs were equal to 70% of the total value of shipments in 1992, while fixed production costs and overheads accounted for 8%. Of the 70% variable production costs, production wages and fringe amounted to only 10%, while 60% were due to material costs. The 22% of value of shipments not accounted for by variable costs, fixed production costs, or overheads was assumed to constitute returns to capital-interest on debt and return to stockholders. If one assumes that the costs of capital were included in base costs, these figures are consistent with the PPEMA spokesman's estimate of 5 to 10% markup. The incremental capital costs of meeting the emission standards are explicitly factored into our estimates, so they are not included in the assumed markup to avoid double counting. The assumed markup was taken as the midpoint of the range cited by the PPEMA spokesman, or 7.5%. We used this value for both the engine manufacturer and for OEM equipment manufacturer.

Table 8 shows how the retail price equivalent cost was calculated for converting two-stroke to four-stroke engines for handheld equipment. The manufacturers' incremental variable costs are multiplied by the manufacturer's markup, and then the per-unit fixed costs are added to the total to determine the incremental cost to the OEM. The OEM adds its markup to give the incremental cost to the equipment dealer. The costs of any changes to the OEM equipment design are discussed later in the memorandum. The incremental dealer cost is multiplied by the dealer's markup percentage of 16% to give the total incremental costs to the end-user at $19.68.

2.2 Cost Analysis for Improving Two-stroke Engines

This section presents our incremental cost estimates for improvements in the scavenging of two-stroke engines by optimizing the designs of the piston, ports, and combustion chamber, and for the application of stratified scavenging using a throttle valve. Many of the estimates and assumptions used in the analysis of two-stroke to four-stroke engine conversion are also used in this section.

Table 8: Calculation of retail price equivalent (RPE) impact of converting two-stroke to four-stroke engines.

Total Added Manufacturing Cost	9.93
Mfr's Markup @ 7.5%	0.74
Fixed Costs	5.12
Total Cost to OEM	15.79
OEM Markup @ 7.5%	1.18
Total Cost to Dealer	16.97
Dealer's Markup @ 16%	2.72
Retail Price Equivalent	**19.68**

Improved Scavenging

Substantial HC emission reductions can be realized by optimizing the piston and port designs to reduce scavenging losses. The use of better piston and port designs, such as the GPB's deflector piston/port designs (Blair, 1996); and/or the use of an optimized combustion chamber, such as the GUT "Jockey-cap" combustion chamber (Laimbock and Landerl, 1990) can also allow the use of a leaner mixture without jeopardizing the engine performance. A leaner mixture and better combustion characteristics result in lower HC and CO emissions. Thus, a two-stroke engine with optimized piston, port, and combustion chamber designs, along with a better quality carburetor, could be an option to reduce the engine-out emissions. Although it is not certain that these improvements would reduce emissions enough to meet the Tier II standards, it was considered interesting to determine the incremental costs for two-stroke engines with these improvements. Such an engine would also provide a less harsh environment for an oxidation catalyst to perform its job by further reducing engine-out HC and CO emissions. Therefore, we have developed a cost analysis based on these improvements. A cost analysis for utilizing an oxidation catalyst for a two-stroke engine is presented later in the memorandum.

Optimization of piston, port, and combustion chamber designs would not require additional parts or machining processes, but only refinements in the design of existing parts. The effect on variable manufacturing costs, therefore, will be very small, and could be either positive or negative. For purposes of this analysis, we assume that the design changes would not affect variable costs, but only the fixed costs of production.

Fixed costs - Our estimates of the fixed costs of optimizing piston, port, and combustion chamber designs are shown in Table 9. The design of an improved two-stroke handheld engine is somewhat more complex than the designs for engines used in non-handheld equipment because of the tighter tolerances needed on a smaller engine. Also, the designer has less flexibility in what can be done with a two-stroke design, and may, therefore, need additional effort. We estimate that the development of an optimal design would require about two engineer-years, at a cost of about $200,000 for labor and overheads. Emission testing costs were estimated at $90,000. Other engineering-related costs such as prototype engines, travel, test materials and so forth are estimated at $50,000. The total engineering cost is estimated at $340,000.

Updating the parts lists and similar information to incorporate the redesigned parts is estimated to cost $20,000. New master dies would be required for the cylinder/cylinder head, piston, and carburetor. Since the cylinder and cylinder head are a one-piece casting for two-stroke handheld engines, we estimate the master die costs at about $40,000 or $10,000 more than dies for just the cylinder or cylinder head alone. The die for the piston is the same as that we estimated for the two-stroke to four-stroke conversion case at about $10,000. The cost of a new master die for the die-cast carburetor body is estimated at $60,000, based on a discussion with a Walbro engineer. Again, costs of the other dies were estimated based on our conversations with industry sources and die makers. Set-up costs of $25,000 were also estimated. Thus, the total engine specific cost would be $495,000. This cost was amortized over five years at a cost of capital of 9%, and yield to about $127,000 per year. Dividing these estimates by the number of units produced results in fixed costs of $1.82 for improving two-stroke engines for handheld equipment.

Retail price equivalent - Using similar methodology and manufacturer's and dealer's mark-ups presented in the two-stroke to four-stroke engine conversion, the RPE for improving two-stroke engines is $2.27 (see Table 10).

Stratified Scavenging

A well-designed stratified scavenging system in a two-stroke engine with optimized piston, port, and combustion chamber designs can be expected to reduce full-power HC emissions by 30% to 50%. In this section, we estimate the incremental costs for a stratified scavenging system.

Table 9: Estimated fixed costs for two-stroke engines with improved scavenging.

Engineering Costs	
Engineering labor + OH (2 year @ $100,000)	200,000
Number of Tests	300
Test Cost ($)	300
Testing costs	90,000
Other engineering	50,000
Total Engineering	340,000
Technical support	
Training/Tech. Pubs	20,000
Tooling Costs	
New Master Dies	
Cylinder/Cylinder Head	40,000
Piston	10,000
Carburetor	60,000
Total Tooling	110,000
Machine Tool Setup	25,000
Total Engine-Specific	495,000
Amortized over 5 yrs	127,261
New Machine Tool	0
Amortized over 10 yrs	0
Total Fixed Cost/Yr	127,261
Annual Production	70,000
Fixed cost/engine	**1.82**

Table 10: Calculation of retail price equivalent (RPE) impact of two-stroke engines with improved scavenging.

Total Added Manufacturing Cost	0.00
Mfr's Markup @ 7.5%	0.00
Fixed Costs	1.82
Total Cost to OEM	1.82
OEM Markup @ 7.5%	0.14
Total Cost to Dealer	1.95
Dealer's Markup @ 16%	0.31
Retail Price Equivalent	**2.27**

Variable manufacturing costs - The stratified scavenging approach would involve changes in the air system to prefill the transfer ports with air instead of air-fuel mixture. This would require adding new hardware to the engine, and would thus increase variable costs. Our estimate of these variable costs is shown in Table 11. As shown in the table, we estimated that the throttle valve would cost about $0.50 from an external supplier, and we assumed another $0.50 for extra fittings. We also estimated that it would require one minute of added labor time (costing $0.58 with overhead) for handling and assembling the added parts.

Fixed costs - Our estimates of fixed costs are tabulated in Table 12. The fixed costs for the development of two-stroke engines with optimized piston, port and combustion chamber designs, improved carburetor, and a stratified scavenging system would be about the same as those for the optimized two-stroke engines without stratified scavenging. For this case, however, we estimated that 400 emission tests would be required instead of 300, since more tests would be needed to develop the stratified scavenging system. The costs for technical support, training, and publications were estimated to be higher as well; we estimate $50,000 for this case. This is intermediate between the costs of a technical bulletin and those of a complete revision to engine documentation.

The estimates for the costs for master dies, and setup costs are same as those used in the improved two-stroke case. Thus, the total engine specific costs were estimated at $555,000. These costs were amortized over five years at a cost of capital of 9%. The total amortized fixed costs amount to about $143,000 per year. Dividing the estimate by the number of units produced results in fixed costs of $2.04 per engine.

Table 11: Manufacturing costs for additional parts for two-stroke engine with stratified scavenging.

	Cost/Piece	Pieces/Engine	Total
Throttle Valve	0.50	1	0.50
Other Fittings			0.50
Total Parts Cost			1.00
Added Assembly Labor			
Labor minutes			1
Labor Cost $/hr			25
Direct Labor $			0.42
Overhead @40%			0.17
Total Labor + OH			0.58
Total Added Mfg. Cost			**1.58**

Table 12: Estimated fixed costs for two-stroke engines with stratified scavenging.

	Case 1
Engineering Costs	
Engineering labor + OH (2 year@$100K)	200,000
Number of Tests	400
Test Cost ($)	300
Testing costs	120,000
Other engineering	50,000
Total Engineering	370,000
Technical support	
Training/Tech. Pubs	50,000
Tooling Costs	
New Master Dies	
Cylinder/Cylinder Head	40,000
Piston	10,000
Carburetor	60,000
Total Tooling	110,000
Machine Tool Setup	25,000
Total Engine-Specific	555,000
Amortized over 5 yrs	142,686
New Machine Tool	0
Amortized over 10 yrs	0
Total Fixed Cost/Yr	162,686
Annual Production	70,000
Fixed cost/engine	**2.04**

Retail price equivalent - Using similar assumptions to those presented previously, the RPE for improved two-stroke engines with stratified scavenging is $4.66, as shown in Table 13.

Table 13: Calculation of RPE impact of two-stroke engines with stratified scavenging.

Total Added Manufacturing Cost	1.58
Mfr's Markup @ 7.5%	0.12
Fixed Costs	2.04
Total Cost to OEM	3.74
OEM Markup @ 7.5%	0.28
Total Cost to Dealer	4.02
Dealer's Markup @ 16%	0.64
Retail Price Equivalent	**4.66**

2.3 Cost Analysis for Two-stroke Engines with Catalytic Converter

A catalytic converter can be added to a two-stroke engine to reduce emissions. However, the use of catalyst technology alone may not be sufficient to meet both emission limits and the U.S. Forest Service limits on exhaust temperature. If a catalytic converter with a high efficiency were used, the exothermic energy released by the oxidation of HC and CO would be very high. The resulting catalyst temperature would exceed the thermal limits of the catalytic converter (roughly 1,000 °C), as well as exceeding the USFS limits on exhaust and skin temperatures. If a catalytic converter with a low efficiency were used, the emission reductions might not be sufficient to meet the Tier II emission standards. Thus, the key requirement in each of these approaches is to reduce the engine-out HC and CO emission levels to the point that a catalytic converter can survive in the exhaust without overheating, and if possible to achieve an overall lean or stoichiometric air-fuel ratio in the exhaust to maximize catalytic converter efficiency. It may be then possible to rely on the catalytic converter to bring the remaining HC and CO to levels well below the applicable standards. Also, adding thermal shielding and introducing additional air into the exhaust flow would mitigate most heat and USFS concerns.

A wide variety of emission control measures and design features could be used to achieve the further reduction in engine-out HC and CO emissions needed to allow the catalytic converter to survive in the exhaust. Some of these measures have already been discussed in previous chapters. Since it is not always clear what technology a manufacturer would use in conjunction with the catalyst technology, we assessed the costs only for the application of the catalyst technology. These costs can then be combined with the cost estimates for improved two-stroke engines with or without a stratified scavenging system, or with those for converting to a four-stroke engine.

Two-Stroke Engines with Catalytic Converter

Variable manufacturing costs - The use of a catalytic converter in a two-stroke engine would require some hardware or variable costs, such as the costs for the catalyst and heat shield. These variable costs are tabulated in Table 14. As shown in the table, we estimated that the ceramic catalyst would cost about $4.00 (Allied Signal and United Emission Catalyst, 1996). If a metallic catalyst is used, we estimated that the cost would be doubled (i.e. $8.00). The costs of the heat shield and the heat-resistant muffler are accounted for in the equipment cost

analysis presented later in the memorandum, and are not duplicated here to avoid double-counting.

We estimated that the catalytic converter would require one minute of added labor time (costing $0.58 with overhead) for handling and the relatively straightforward assembly of added parts (Ostwald, 1994, Winchell, 1989) performed by skilled labor. These costs would be applicable to both high and low volume models.

Table 14: Manufacturing costs for additional parts for two-stroke engine with catalyst.

	Ceramic	Metallic
Catalyst	4.00	8.00
Added Assembly Labor		
Labor minutes	1	1
Labor Cost $/hr	25	25
Direct Labor $	0.42	0.42
Overhead @40%	0.17	0.17
Total Labor + OH	0.58	0.58
Total Added Mfg. Cost	**4.58**	**8.58**

<u>Fixed costs</u> - Our estimates of the fixed costs involved in applying a catalytic converter to a two-stroke engine model are shown in Table 15. We estimate that the development effort would require about two engineer-years of work, costing $200,000 with overhead. The relatively large amount of effort required is due to the lack of existing experience with catalytic converters. The number of emission tests would be more than that needed for a minor redesign but perhaps less than for a major redesign (two- to four-stroke). We assumed a total of 400 emission tests at a cost of $120,000 for baseline, prototype and other emission testing. Other engineering-related costs were estimated at $50,000. The costs for technical support, training, and publications were estimated at $100,000, reflecting the need for safety and technical training of service personnel, as well as changes in parts lists and similar documents.

Table 15: Estimated fixed costs for two-stroke engines with catalyst.

Engineering Costs	
Engineering labor + OH (2 year @ $100,000)	200,000
Number of Tests	400
Test Cost ($)	300
Testing costs	120,000
Other engineering	50,000
Total Engineering	370,000
Technical support	
Training/Tech. Pubs	100,000
Tooling Costs	
Total Engine-Specific	470,000
Amortized over 5 yrs	120,833
New Machine Tool	0
Amortized over 10 yrs	0
Total Fixed Cost/Yr	120,833
Annual Production	70,000
Fixed Cost/engine	**1.73**

The addition of a catalytic converter to a two-stroke engine would not in itself require any tooling costs. The changes in the design of the muffler, heat shield, and other components of the engine-powered equipment would involve tooling costs, but these are addressed separately later in the memorandum. Thus, the total engine-specific costs would be about $420,000. These costs were amortized over five years at a cost of capital of 9%, resulting in annual fixed costs of $121,000. Dividing these estimates by the number of units produced results in fixed costs of $1.73 per engine for 70,000 units per year.

Retail Price Equivalent - Using similar assumptions that presented previously, the RPEs for two-stroke engines with ceramic and metallic catalysts are $8.30 and $13.66, respectively, as shown in Table 16.

Table 16: Calculation of retail price equivalent (RPE) impact of two-stroke engines with catalyst.

	Ceramic	Metallic
Total Added Mfring. Cost	4.58	8.58
Mfr's Markup @ 7.5%	0.34	0.64
Fixed Costs	1.73	1.73
Total Cost to OEM	6.65	10.95
OEM Markup @ 7.5%	0.50	0.82
Total Cost to Dealer	7.15	11.77
Dealer's Markup @ 16%	1.14	1.88
Retail Price Equivalent	**8.30**	**13.66**

Improved Engine Designs with Catalyst

As discussed previously, a catalytic converter could be combined with any of the other advanced two-stroke options considered in this memorandum to achieve even lower emissions. Table 17 summarizes the RPEs for improved scavenging, stratified scavenging, and two-stroke to four-stroke conversation with catalyst technology.

Table 17: Calculation of retail price equivalent impacts of improved engine designs with catalyst.

	Improved Scavenging w/ Catalyst		Stratified Scavenging w/ catalyst		2-stroke to 4-stroke w/ catalyst	
	Ceramic	Metallic	Ceramic	Metallic	Ceramic	Metallic
Total Added Manufacturing Cost	4.58	8.58	6.17	10.17	14.51	18.51
Mfr's Markup @ 7.5%	0.34	0.64	0.46	0.76	1.09	1.39
Fixed Costs	3.54	3.54	3.76	3.76	6.84	6.84
Total Cost to OEM	8.47	12.77	10.39	14.69	22.44	26.74
OEM Markup @ 7.5%	0.64	0.96	0.78	1.10	1.68	2.01
Total Cost to Dealer	9.11	13.73	11.17	15.80	24.12	28.74
Dealer's Markup @ 16%	1.46	2.20	1.79	2.53	3.86	4.60
Retail Price Equivalent	10.56	15.93	12.96	18.32	27.98	33.34

2.4 Modifications to Handheld Equipment due to Engine Changes

With few exceptions, manufacturers of handheld equipment produce their own engines. Thus, engine modifications and equipment modifications are likely to be closely coordinated. Engine modifications that are likely to require a change in equipment design include the conversion from two-stroke to four-stroke engines, and the addition of a catalytic converter to two-stroke engines. In our judgement, internal improvements to the two-stroke engine are not likely to require changes in the equipment design.

Table 18: Comparison of equipment parts for a two-stroke and a four-stroke engine.

Part	Weight (oz)		Material	Manufacturing Process
	2-Stroke	4-Stroke		
Air-Cleaner Cover	2	3	Plastic	Injection Molding
Shroud Extension and Stand	2.5	n/a	Plastic	Injection Molding
Starter/Fan Housing Assembly	9.5	8.5	Plastic	Injection Molding
Throttle/Handle Housing (left/top)	1.5	6	Plastic	Injection Molding
Throttle/Handle Housing (right/bottom)	1.5	6	Plastic	Injection Molding
Clutch Cover	2	n/a	Plastic	Injection Molding
Muffler Cover	5	n/a	L.C. Steel	Stamping
Engine Cover	n/a	5	Plastic	Injection Molding
Muffler	8.5	8.5	L.C. Steel	Stamping
Total Parts Number	8	6		
Total Weight: Plastic	19	28.5		
Total Weight: L.C. Steel	13.5	8.5		

Two-stroke to four-stroke conversion - Four-stroke engines are physically larger and heavier than two-stroke engines. On nearly all chainsaws, string trimmers, and hand-held blowers, the engine is enclosed in a set of injection-molded plastic components, which together make up the external body of the equipment. The significant change in engine size and shape due to changing to four-stroke operation will require changes in the design of these components. This will require new injection molds, at a minimum, and may require additional material as well. On the other hand, backpack blowers, portable pumps, and similar equipment generally do not enclose the engine in plastic. For most of these units, the only equipment change needed would be a minor change in the design of the stamped metal retaining strap attached to the engine.

We compared the external plastic components used in the Ryobi two-stroke string trimmer with those used in the Ryobi four-stroke trimmer. The results of this comparison are shown in Table 18. Analysis of the changes is complicated by the fact that some changes were obviously made for purposes of styling and/or user comfort, and were not directly attributable to the change from two-stroke to four-stroke design. The design changes also succeeded in eliminating one component (the stamped steel muffler shield) by increasing the size of the engine cover, and reducing the number of injection-molded components in the starter housing and shaft support from three to two. The total weight of injection molded components increased by 9.5 ounces.

In our view, neither the elimination of the two parts nor the increase in weight of the injection-molded parts between the Ryobi four-stroke trimmer and the earlier two-stroke trimmer are attributable to the change from two-stroke to four-stroke operation. Instead, these were attributable to design and styling improvements that are normally incorporated with any new model.

The change from two-stroke to four-stroke operation will also require some changes in the design of the muffler, as the location of the exhaust discharge from the engine is different between the two designs. A typical muffler consists of three stamped sheet metal pieces joined together. While it might be possible to accommodate the change in location with a change in only one of these pieces, we anticipate that a change in all three pieces would be required in most cases. This would require changes in the three stamping dies used to make these pieces. In the case of the Ryobi engines, the change from two-stroke to four-stroke also made possible the incorporation of an integral spark arrestor into the muffler, thus adding two more components: a stamped steel plate and a section of metal screen. These were not counted as an incremental cost due to the change, since they represent a product enhancement rather than a change made necessary by the change from two-stroke to four-stroke.

Table 19: Estimated fixed costs for equipment design changes required for changing from two-stroke to four-stroke engines.

Fixed Costs	Chainsaws, Trimmers etc.	Backpack Blowers and Pumps
Engineering Costs		
Engineering labor (person year)	0.5	0.25
Engineering labor + OH	50,000	25,000
Number of Tests	0	0
Test Cost ($)	300	300
Testing costs	0	0
Other engineering	20,000	10,000
Total Engineering	70,000	35,000
Technical support		
Training/Tech. Pubs	20,000	10,000
Tooling Costs		
New Injection Molds		
Air Cleaner Cover	5,000	0
Fan Housing Cover	20,000	0
Engine Cover	10,000	0
New Stamping Dies		
Muffler, Top	5,000	5,000
Muffler, Bottom	5,000	5,000
Muffler, Baffle	5,000	5,000
Engine Retainer Strap	0	5,000
Setup changes	20,000	10,000
Total tooling	70,000	30,000
Total Engine-Specific	160,000	75,000
Amortized over 5 yrs	40,603	19,032
New Machine Tools	0	0
Amortized over 10 yrs	0	0
Total Fixed Cost/Yr	40,603	19,032
Annual Production	70,000	70,000
Fixed cost/engine	**0.59**	**0.28**

Based on our comparison of the two Ryobi models, no incremental variable costs are assignable to the equipment changes required to accommodate the four-stroke engine. However, the changes in the design of the muffler stamping would require new stamping dies, and the changes in the design of the air cleaner cover, fan housing cover, and engine cover would require new injection molds. These would not be required for pumps and backpack blowers. The engine cover for pumps and backpack blowers is a stamped metal strap, which would require a new stamping die. No new machine tools would be required, since only the shape of the components is changed, and not the number of basic manufacturing processes. We estimate that about six months of engineering time would be required to make the needed design changes and confirm the performance of the modified designs (three months for the pumps and backpack blowers). Detailed cost estimates are shown in Table 19.

Although the needed changes are straightforward, they would involve a significant amount of detail. Miscellaneous engineering-related costs would include performance and safety testing and similar costs. These are estimated at $20,000 for chainsaws, trimmers, and handheld blowers, and $10,000 for backpack blowers and pumps. The estimated costs for the technical publications and training are consistent with an independent cost estimate for a minor engine/equipment modification (Honda, 1996).

Table 20: Calculation of retail price equivalent impact of equipment changes required to change two-stroke to four-stroke engines.

	Chain-saws, Trimmers etc.	Backpack Blowers and Pumps
Total Added Mfring. Cost	0.00	0.00
Mfr's Markup @ 7.5%	0.00	0.00
Fixed Costs	0.59	0.28
Total Cost to OEM	0.59	0.28
OEM Markup @ 7.5%	0.04	0.02
Total Cost to Dealer	0.63	0.30
Dealer's Markup @ 16%	0.10	0.05
Retail Price Equivalent	**0.73**	**0.34**

The costs of sheet metal stamping dies can range from $5,000 for a simple die to substantially higher. Since the muffler components are all relatively simple stamping, we estimated a die cost of $5,000 each. Injection molds can also range from $5,000 for a simple one up to much higher costs. The mold for the air cleaner cover would be simple, while that for the fan housing is more complex, and that for the engine cover is of intermediate complexity. These costs were estimated at $5,000, $20,000, and $10,000, respectively. Adjustments to other tooling and new jigs to accommodate the changed size and shape of the parts are estimated to cost an additional $20,000 ($10,000 for the backpack blowers and pumps). With these estimates, the fixed costs per engine are $0.59 for chainsaws, trimmers and equipment alike, and $0.28 for backpack blowers and pumps. The RPE for these incremental costs are estimated to be $0.73 for chainsaws, trimmers and equipment alike, and $0.34 for backpack blowers and pumps (see Table 20).

<u>Catalytic converters in two-stroke engines</u> -The addition of a catalytic converter to a two-stroke engine would also require changes in the equipment design. The catalytic converter would be incorporated into the muffler, necessitating changes in the design of all three of the muffler stamping. Since the exhaust temperature will also increase greatly, it will be necessary to change the muffler material from the present low-carbon steel to a more expensive alloy steel such as 405 (chromium alloy) or 304 (nickel-chromium alloy) that will retain its strength at higher temperatures. We estimate that this will double the material costs for the muffler to about $0.80 per pound. A local metal supplier (ABC supply, 1996) quoted prices of $0.80 per pound for cold-rolled 1080 low-carbon steel sheet, and $1.50 per pound for 304 alloy sheet, about twice as much. Large buyers are able to obtain much lower prices (Am. Metal Market, 1996). Quotes for 405 alloy sheet were not available, but the cost is expected to be considerably lower, due to its lower alloy content, and we estimate it at $0.80 per pound in large volume. The resulting increase in cost of 0.40 cents per pound compared to low-carbon steel, multiplied by the 8.5 ounce weight of the muffler, gives an increase in material cost of $0.23 per piece (Table 21).

The higher muffler temperature will require a change in the thermal design of the equipment as well. Presently, a single metal muffler cover serves as a heat shield to prevent direct contact with the hot muffler. Based on practices used with catalytic converters in two-stroke motorcycles, we expect that manufacturers would add a second heat shield around the muffler cover. This would require design changes in the air cleaner cover and the fan cover assembly as well, to accommodate the increased size of the muffler/heat-shield assembly and to provide adequate cooling air to this assembly. The additional heat shield is assumed to be stamped out of low-carbon steel (since its temperature is less than that of the muffler, high-temperature steel is not required). The weight of the heat shield would be similar to that of the present muffler cover. The resulting variable manufacturing costs are also shown in Table 21. The added assembly labor to attach the heat shield would amount to about $0.175, giving a total increase in the variable manufacturing cost of $0.90 (see Table 22).

Table 21: Incremental variable costs for handheld equipment equipped with catalyst.

	Heat Shield	Muffler
Process	Stamping	Stamping
Material	L.C. Steel	Alloy-Steel
Weight (lb)	0.313	0.531
Wgt+10%Scrap	0.344	0.584
Material cost $/lb	0.40	0.40[1]
Material Cost ($/part)	0.138	0.234
Labor minutes	1	0
Labor cost $/hr	15	15
DL Cost $/part	0.25	0.00
Overhead @40%	0.10	0.00
Total cost/part	0.35	0.00
Total equip. cost/part	**0.49**	**0.23**

[1] Incremental cost compared to existing material.

Table 22: Incremental variable cost for equipment changes needed to add a catalytic converter.

	Cost/ Piece	Pieces/ Engine	Total
Parts Cost			
Heat Shield	0.49	1	0.49
Alloy-Steel Muffler	0.23	1	0.23
Total Parts Cost			0.72
Added Assembly Labor			
Labor minutes			0.5
Labor Cost $/hr			15
Direct Labor $			0.125
Overhead @40%			0.05
Total Labor + OH			0.175
Total Added Variable Equipment Manufacturing Cost			0.90

The fixed costs involved in modifying handheld equipment models for catalytic converter use would include about one year of engineering labor and testing to ensure safe design of the high-temperature components. Testing and related costs are included under "other engineering". Significant safety-related changes to consumer manuals and documentation would also be needed. The costs of the needed training and documentation changes are estimated at $100,000, which is intermediate between the costs for a major engine change ($500,000) and those of a technical support bulletin ($20,000) (Honda, 1996). Tooling costs would include new injection molds for the air cleaner cover and fan housing cover, and new stamping dies for the heat shield, muffler cover, and the three components of the muffler itself. Setup costs would include the changes needed in the assembly line, jigs, handling equipment, etc. to accommodate the added components and assembly operations. Detailed cost estimates are shown in Table 23.

Since the heat shield would be an added component, it would require an additional stamping press capacity to produce it. We estimate the press cycle time at 30 seconds, based on typical values (Amstead, Ostwald, and Begemand, 1976). Allowing for two shifts, and seven hours of production per shift, this is equivalent to about 1500 parts per shift. Thus, 70,000 parts per year for would require about 25% of one press's capacity (we assume that the remaining capacity would be used on other engine lines). A 50-ton stamping press costs about $50,000 (Hess-MAE, 1996), so we assessed machine tool costs of $15,000, allowing for some loss of production due to die changes between runs of different parts.

As shown in Table 23, the fixed cost per equipment due to changes in equipment with two-stroke engines to accommodate catalytic converters is $1.28. The RPE for this incremental cost is $2.80 (see Table 24).

Table 23: Estimated fixed costs for equipment changes needed to add a catalytic converter.

Engineering Costs	
Engineering labor (person year)	1
Engineering labor + OH	100,000
Number of Tests	0
Test Cost ($)	300
Testing costs	0
Other engineering	50,000
Total Engineering	150,000
Technical support	
Training/Tech. Pubs	100,000
Tooling Costs	
New Injection Molding Dies	
Air Cleaner Cover	5,000
Fan Housing Cover	20,000
Muffler Cover	5,000
Heat Shield	5,000
Muffler, Top	5,000
Muffler, Bottom	5,000
Muffler, Baffle	5,000
Setup changes	40,000
Total tooling	90,000
Total Engine-Specific	340,000
Amortized over 5 yrs	87,411
New Machine Tools	15,000
Amortized over 10 yrs	2,337
Total Fixed Cost/Yr	89,749
Annual Production	70,000
Fixed cost/engine	**1.28**

2.5 Cost-Effectiveness Analysis

In our previous study for ARB (Chan and Weaver, 1996), we estimated the cost-effectiveness of the potential emission control technologies based on less-detailed cost estimates, especially for the material and fixed costs. This section refined the analysis using the cost estimates based on the more detailed, bottom-up cost analysis presented earlier in this chapter.

Handheld equipment engines that meet the proposed Tier II emission standards are expected to decrease fuel consumption significantly. The amount of savings on the fuel consumption depends on the intensity of utilization of the equipment. In ARB's non-road equipment inventory study (ARB, 1990), the average lifespans for commercial and residential handheld equipment were estimated to be 2.2 and 5.0 years, respectively. The average annual usages were estimated to be 261 and 9.5 hours for commercial and residential handheld equipment, respectively. Using the estimates in the ARB study, an average fuel consumption of 1.35 lbs/bhp-hr was also assumed in the analysis. Average values of 3 and 1.5 horsepower were assumed for the commer-

cial and residential handheld equipment, respectively. Assuming that all technological approaches would provide at least 30% reduction in fuel consumption, EF&EE has determined the value of the lifetime fuel savings for the commercial and residential handheld equipment to be about $151 and $6, respectively.

Table 24: Calculation of RPE impact of equipment changes needed to add a catalytic converter.

Total Added Manufacturing Cost	0.90
Mfr's Markup @ 7.5%	0.07
Fixed Costs	1.28
Total Cost to OEM	2.25
OEM Markup @ 7.5%	0.17
Total Cost to Dealer	2.41
Dealer's Markup @ 16%	0.39
Retail Price Equivalent	**2.80**

EF&EE also calculated the cost-effectiveness of the technology approaches. Cost-effectiveness was calculated based on the highest incremental RPE, the projected emission reductions, and fuel savings. The highest incremental RPE would be the two-stroke to four-stroke conversion with metallic catalytic converter, which was about $37. This incremental RPE also included the incremental equipment RPE, which was $3.50 - sum of $0.73 and $2.80 (see Table 20 and Table 24).

The projected emission reductions were calculated from the differences between the average emission levels from Tier I engines and the Tier II limits. The results of the cost-effectiveness analysis for the commercial and residential handheld equipment are presented in Table 25 and Table 26, respectively.

For commercial equipment, the cost-effectiveness calculations show that, even without considering the fuel saving, the costs per pound of VOC emissions eliminated would be far lower than the costs per pound for most other available emission control strategies. With the fuel savings counted in, the net costs are negative (i.e. the is a lifecycle cost saving), since the saving on fuel costs more than outweighs the higher purchase price.

The cost-effectiveness for residential handheld equipment is shown in Table 26. Without considering the fuel savings, although the costs per pound are substantially higher than those for the commercial handheld equipment, the cost-effectiveness numbers are still within the acceptable ranges; the cost per pound of HC eliminated would be about $5 based on the use of the highest incremental RPE without considering fuel saving (the worst scenario). In addition, it should be considered that many residential users of hand-held equipment can substitute cord-electric units, which are significantly less costly even than present engine-powered units. Thus, it is likely that only the heavier residential users of handheld equipment would choose to purchase emission-controlled, engine-powered equipment rather than cord-electric or battery-electric units.

Table 25: Cost-effectiveness of ARB Tier II emission standards for commercial handheld equipment.

Cost Effectiveness Analysis: Commercial Handheld Equipment			
Average Lifespan (yr)			2.2
Average Usage (hr/yr)			261
Average Horsepower			3
Average Load Factor			0.5
Fuel Saving			
Baseline Fuel Consumption (lbs/bhp-hr)			1.35
Improved Fuel Consumption (lbs/bhp-hr)			0.945
Fuel Density (lbs/gal)			6.25
Fuel Price ($/gal)			1.35
Lifetime Fuel Saving (lbs)			698
Lifetime Fuel Saving (gal)			112
Fuel Saving ($)			151
Emission Reductions			
	Emissions (g/bhp-hr)		
	THC	CO	PM
Average Tier I Engine (1995)	151	313	4
CARB Tier II Limits	50	130	0.25
Emission Reduction (g/bhp-hr)	101	183	4
Emission Reduction (lbs/unit)	191	347	7
Incremental Costs			
Highest Incremental RPE			$37
Incremental Consumer Cost (w/ Fuel Saving)			-114
Cost Effectiveness without Fuel Saving ($/lbs)			
All Costs Allocated to HC Emissions			0.19
All Costs Allocated to CO Emissions			0.11
All Costs Equally Split Between HC and CO: HC Emissions			0.10
All Costs Equally Split Between HC and CO: CO Emissions			0.05
Cost Effectiveness with Fuel Saving ($/lbs)			
All Costs Allocated to HC Emissions			-0.60
All Costs Allocated to CO Emissions			-0.33
All Costs Equally Split Between HC and CO: HC Emissions			-0.30
All Costs Equally Split Between HC and CO: CO Emissions			-0.16

Note: Usage and fuel economy data were obtained from an ARB study (ARB, 1990).

Table 26: Cost-effectiveness of ARB Tier II emission standards for residential handheld equipment.

Cost Effectiveness Analysis: Residential Handheld Equipment			
Average Lifespan (yr)			5
Average Usage (hr/yr)			9.5
Average Horsepower			1.5
Average Load Factor			0.5
Fuel Saving			
Baseline Fuel Consumption (lbs/bhp-hr)			1.35
Improved Fuel Consumption (lbs/bhp-hr)			0.945
Fuel Density (lbs/gal)			6.25
Fuel Price ($/gal)			1.35
Lifetime Fuel Saving (lbs)			29
Lifetime Fuel Saving (gal)			5
Fuel Saving ($)			6
Emission Reductions			
	Emissions (g/bhp-hr)		
	THC	CO	PM
Average Tier I Engine (1995)	151	313	4
CARB Tier II Limits	50	130	0.25
Emission Reduction (g/bhp-hr)	101	183	4
Emission Reduction (lbs/unit)	8	14	0
Incremental Costs			
Highest Incremental RPE			$37
Incremental Consumer Cost (w/ Fuel Saving)			$31
Cost Effectiveness without Fuel Saving ($/lbs)			
All Costs Allocated to HC Emissions			4.66
All Costs Allocated to CO Emissions			2.57
All Costs Equally Split Between HC and CO: HC Emissions			2.33
All Costs Equally Split Between HC and CO: CO Emissions			1.29
Cost Effectiveness with Fuel Saving ($/lbs)			
All Costs Allocated to HC Emissions			3.87
All Costs Allocated to CO Emissions			2.14
All Costs Equally Split Between HC and CO: HC Emissions			1.93
All Costs Equally Split Between HC and CO: CO Emissions			1.07

Note: Usage and fuel economy data were obtained from an ARB study (ARB, 1990).

3. EMISSIONS FROM PREEMPTED AND NON-PREEMPTED COMMERCIAL CHAINSAWS

As discussed previously, chainsaws with engine size greater than 45 cc, and blade capable brushcutters and clearing saws with engine size greater than 40 cc are preempted from the ARB emission regulations for handheld equipment. This chapter presents our approach to quantifying the emissions from these preempted equipment categories in commercial lawn and garden activities in the urban areas of California, as well as the results of this quantification.

While ARB has estimates of the emissions contributed by the handheld equipment, there is a lack of information on the amount of emissions in the handheld equipment emission inventory that are contributed by the preempted equipment. In order to estimate these emissions, it was necessary to estimate the population and usage of the preempted equipment. With the emission characteristics and the population and usage of the preempted and non-preempted equipment, the emissions contributed by the these equipment could be calculated.

3.1 Population and Usage Survey of Preempted Handheld Equipment

The Survey

In order to determine the population and usage of preempted equipment, we performed a survey on representative landscape service providers and institutional users in Sacramento and Los Angeles. The survey initially started by calling potential candidates, such as tree services companies, utility companies and city park tree services, to inquire willingness of participation. As a result of making more than thirty inquiries, seven companies or institutes in the Los Angeles and seven in Sacramento expressed interest in the survey. Lists of potential participants can be found in Appendix C.

For those companies or institutes that were interested in the survey, we followed up by faxing or mailing out a survey form. A copy of the introduction letter and survey form can be found in Appendix C. As indicated in the survey form, the information that we requested were the number, make, model and engine size of chainsaws, brushcutters or clearing saws that were currently possessed by the company or institute. The age of the equipment and the number of usage hours were also requested.

For those that did not respond after a week from the initial mail outs, we followed up with more phone calls to make sure the potential participants received the survey form. Although fourteen companies and institutes expressed interested in the survey, we received only seven responses from these potential candidates. Out of these seven participants, four were received from the Sacramento area and three were received from the Los Angeles area. For both Sacramento and Los Angeles, there was only one participant from a private tree services company and others were from the State agencies.

After reviewing the responses, follow-up calls were made to those that needed clarification on information such as usage hours and equipment replacement time. The original responses indicated that the annual usage hours ranged from 20 to 1,300, and the equipment life varied from one to ten years. However, according to some published estimates, the average lifetime usage hours only ranged from 500 to 800. After discussions with several participants, it was found that, although the equipment life can be as high as ten years, the engines in the equipment are usually being rebuilt every one or two years depending on the usage. This data is consistent with the information that we observed from our independent focus group study, which is presented in the next Chapter. Therefore, with this finding, we updated the survey with the information on engine rebuild time. We also clarified the number of units, and make and model of the chainsaws indicated in the survey forms with the participants. The technical specifications for the chainsaw makes and models were also compared with those published by the respective manufacturers.

After updating and clarification, we then input the information into spreadsheets. Copies of the as-received responses, as well as summarized responses with updates, are included in Appendix B. The summarized responses indicated that none of these participants owned or operated any brushcutter/clearing saws with engine sizes more than 40 cc, which implied that the contribution of this preempted equipment type to that from preempted chainsaws (with engine size greater than 45 cc) is minimal or insignificant. Therefore, the calculated emission inventories based on survey results were for commercial chainsaws only.

Survey Results

The survey responses from Sacramento and Los Angeles were summarized in Table 27 and Table 28, respectively. As shown in Table 29, further analysis on these data indicated that there were 261 chainsaws listed in the survey. 129 of these chainsaws have engines greater than 45cc. Thus, the survey indicated that 49.4% of the commercial chainsaws used in the urban areas were preempted. The breakdown of the results by Northern and Southern California are also presented in Table 29 for comparison.

Using the survey data, we also determined the average engine size, annual engine usage, age, engine rebuild time and equipment replacement time for these chainsaws. The average engine horsepower was estimated based on a correlation between known engine sizes and horsepowers of commercially available chainsaws, and the data is shown in Figure 3. The correlation equation is horsepower equal to 0.071 times the engine size in cc.

Table 27: Summary of survey responses from Sacramento on commercial chainsaws.

Number of Unit	Make	Model	Engine Size (cc)	Annual Usage (Hour/yr)	Age of Unit (yr)	Replacement (Yr)	Useful Life (Hour)
Props & Company, Sacramento (Private)							
2	STIHL	036	61.5	1040	1	4	4160
2	CRAFTMAN		36	1040	3	4	4160
2	POULAN	655	98	1040	2	4	4160
City Tree Services, Sacramento (Public)							
8	HUSQVARNA	257	57	1300	1	1	1300
8	ECHO	CS3000	30.1	1040	1	1	1040
2	HUSQVARNA	288	88	364	2	2	728
3	HUSQVARNA	41	40	780	1	1	780
4	HUSQVARNA	41	40	260	1	2	520
2	HOMELITE	750	68	260	6	6	1560
1	HOMELITE	1050	100	156	6	8	1248
1	STIHL	090	83	260	8	8	2080
City Parks & Recreation Tree Services, Sacramento (Public)							
1	ECHO	CS330EVL	33.4	100	3	5	500
1	STIHL	036	61.3	50	1	5	250
1	STIHL	029	54.1	50	1	5	250
1	STIHL	025	44.3	75	1	5	375
1	STIHL	009EQ	36.6	100	1	5	500
1	HUSQVARNA	35	34	100	4	5	500
SMUD Tree Services, Sacramento (Public)							
24	ECHO	CS3000	30.1	1560	1	2	3120
24	STIHL	064	84.9	1560	1	2	3120
1	HUSQVARNA	394XP	94	468	1	2	936
1	HUSQVARNA	272XP	72	468	1	2	936

Table 28: Summary of survey responses from Los Angeles on commercial chainsaws.

Number of Unit	Make	Model	Engine Size (cc)	Annual Usage (Hour/yr)	Age of Unit (yr)	Replacement (Yr)	Useful Life (Hour)
Shivers Brothers, Los Angeles (Private)							
1	ECHO	CS3000	30.1	405	1	1	405
1	ECHO	CS3000	30.1	225	1	1	225
1	McCULLOH	2014	40	225	1	1	225
1	POULAN	375	61	225	1	2	450
1	POULAN	375	61	80	1	2	160
1	POULAN	525	82	20	5	10	200
Los Angeles City Street Services, Los Angeles (Public)							
19	HOMELITE	SUPER 2	32	520	10	10	5200
27	HOMELITE	SUPER EZ	36	520	10	10	5200
12	HOMELITE	SUPER XL	54	260	10	10	2600
3	HOMELITE	1050	100	130	10	10	1300
24	ECHO	330	33	390	9	10	3900
6	ECHO	510	51	130	9	10	1300
5	ECHO	8000	81	130	9	10	1300
5	STIHL	011	41	520	6	10	5200
4	STIHL	012	41	520	5	10	5200
19	STIHL	026	49	520	5	10	5200
6	STIHL	034	57	260	5	10	2600
3	STIHL	064	85	130	5	10	1300
7	STIHL	084	127	130	5	10	1300
16	POULAN	S230A	38	260	1	10	2600
Los Angeles Griffith Park Maintenance, Los Angeles (Public)							
1	STIHL	020	35.2	1040	0.5	1	1040
1	STIHL	026	48.7	780	0.5	1	780
1	STIHL	034	56.5	156	0.5	1	156
1	STIHL	038	72.2	156	0.5	1	156
1	STIHL	044	70.7	208	0.5	1	208
1	STIHL	064	84.9	104	0.5	1	104
1	STIHL	066	91.6	104	0.5	1	104
1	STIHL	084	121.6	104	0.5	1	104

With the information on average annual usage, engine rebuild time and equipment replacement times, the average engine and equipment lives were also calculated. The results of these calculations for preempted and non-preempted commercial chainsaws are tabulated in Table 30.

3.2 Emissions from Preempted and Non-preempted Chainsaws

Using the average activity data for preempted and non-preempted commercial chainsaws presented previously, along with the best available emission factor and chainsaw population data (ARB, 1990), the emission inventories for non-preempted and preempted chainsaws were calculated. Using the engine and equipment lifespans, we also calculated the equipment lifetime emissions for non-preempted and preempted chainsaws; the cost-effectiveness of controlling emissions from preempted chainsaws can then be calculated using the lifetime emissions and the incremental cost of a particular control technology. The emission inventories and equipment lifetime emissions for preempted and non-preempted chainsaws are presented in Table 31. For comparison, the total emission inventory for commercial chainsaws that was estimated by CARB (ARB, 1990) are also presented in Table 31.

As shown in Table 31, the preempted chainsaws were estimated to contribute about 66% of the total commercial chainsaw emission inventory. Also, the total commercial chainsaw emission inventory calculated using the data from our survey was about 20% more than that estimated by ARB. This was mainly due to the differences in the average horsepower and annual usage hours; 3.8 hp and 506 hours from our estimates and 4.0 hp and 405 hours for ARB's estimates.

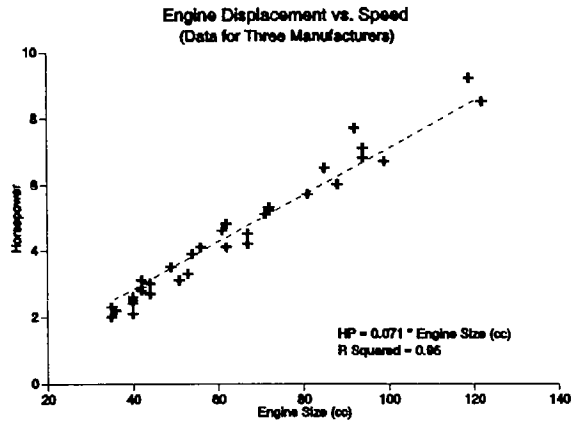

Figure 3: Displacement versus horsepower for a number of chainsaws.

Table 29: Percentage of preempted and non-preempted chainsaws based on survey data.

Commercial Chainsaw	Northern California	Southern California	Whole California
Total	91	170	261
> 45 cc	58	71	129
< 45 cc	33	99	132
% Preempted	63.7	41.8	49.4

Table 30: Average activity data for commercial chainsaws based on survey data.

Average	Preempted	Non-preempted
Engine Size (cc)	73	35
Horsepower (hp)[1]	5.2	2.5
Annual Usage (hr/yr)	500	512
Age (yr)	4.0	6.0
Engine Rebuild Time (yr)	1.5	1.3
Engine Life (hr)	580	562
Equipment Replacement Time (yr)	6.0	7.8
Equipment Life (hr)	2104	3521

[1]Horsepower is estimated based on a correlation of hp = 0.071 * CC

Table 31: Emission inventories for preempted and non-preempted commercial chainsaws.

California Chainsaw Population[1]	Average Emission Factors for Uncontrolled Commercial Chainsaws (g/bhp-hr)[1]			
	HC	CO	NOx	PM
41879	152	513	0.96	3.6
Survey and Calculated Data				
	Preempted	Non-preempted	Total	ARB Estimates[1]
Activity Data				
Population (%)	50.6	49.4	100	100
Population (unit)	20,699	21,180	41,879	41,879
Horsepower (hp)	5.2	2.5	3.8	4.0
Load Factor (%)	0.5	0.5	0.5	0.5
Annual Usage (hr)	500	512	506	405
Annual Usage (hp-hr)	1,297	631	964	810
Lifetime Engine Usage (hr)	580	562	571	n/a
Lifetime Equipment Usage (hr)	2,104	3,521	2,821	n/a
Lifetime Engine (hp-hr)	1,506	693	1,089	n/a
Lifetime Equipment (hp-hr)	5,461	4,341	5,377	n/a
Emission Inventory				
HC (tons/day)	12	6	18	16
CO (tons/day)	42	21	63	53
NOx (tons/day)	0.08	0.04	0.12	0.10
PM (tons/day)	0.29	0.15	0.44	0.37
Chainsaw Lifetime Emissions				
HC (lbs)	1,830	1,455	1,802	n/a
CO (lbs)	6,176	4,910	6,081	n/a
NOx (lbs)	12	9	11	n/a
PM (lbs)	43	34	43	n/a

[1] Data obtained from ARB's nonroad equipment inventory study (ARB, 1990).

4. CONSUMER ATTITUDES ON EFFECTS OF EMISSION STANDARDS

4.1 Research Objectives and Methodology

Qualitative research was conducted for the California Air Resources Board to explore attitudes among the residential and business sectors toward the 1999 Tier II Emission Standards proposed for handheld lawn and garden equipment. The primary objective of this research was to obtain overall reactions to the impending standards and to the specific features of the prospective technology. Focus groups were conducted among both the residential and commercial market sectors.

This focus group study was performed by Freeman, Sullivan and Company (FSC), under a subcontract with EF&EE. While FSC was responsible for recruiting participants and conducting the study, EF&EE staff was working closely with FSC to develop the participant profiles and discussion guide.

4.2 Group Recruitment and Composition

Three separate group sessions were conducted, two residential groups and one commercial group. All sessions were held in Sacramento on March 25 and 26, 1997. All sessions were audio and video recorded. Copies of the audio transcripts are attached as Appendix D.

Residential Groups

Participants for the two residential groups were recruited from the general population in the Sacramento area using a proprietary representative database of Sacramento residents maintained by the focus group facility, *Opinions of Sacramento*. A total of ten residential participants per group were recruited and agreed to participate. Group membership was split into five who owned one piece of equipment and five who owned two or more. A total of seven persons for each group showed up. Qualifications for residential participants were as follows:

- Owned and personally used two-stroke hand held lawn and garden equipment at least once a month during the season

- Each group contain about an equal mix of consumers who owned at least one or 2 or more pieces of equipment
- Has not participated in any focus group discussion for at least a one-year period
- Does not work for a commercial landscape company, a market research firm or for the Air Resources Board

(See Residential 2-Stroke Screening Questionnaire in the Appendix D)

Commercial Group

A total of ten persons were recruited for this group. Two were from the public sector and eight were from the private sector. The government names for recruitment purposes were obtained from the list of government respondents to EF&E's 1996 *Usage Survey of Handheld Equipment*. The private sector firms were identified from the most recent release of Sacramento *Yellow Pages* listings purchased from FSC's commercial sample vendor. This listing was stratified by the size of the company (135 companies with 1-4 employees, and 30 companies with 5 or more employees). Three public sector organizations were contacted, two agreed to participate and one showed up. Of the eight private sector firms that agreed to participate, four were small firms and four were large firms. Five of these eight (2 small, 3 large) showed up for the group. Qualifications for these participants were as follows:

- Owned 5 or more two-stroke hand held lawn and garden equipment -- actual equipment count ranged from 12-65 pieces
- Mix of small (1-4 employees) and large (5 or more employees) companies
- 5 participants represented the private sector (landscaping, tree service, etc.) and 1 participant the public sector (Sacramento County Parks and Rec) (See **Commercial-Gov't. Screening Questionnaire** in **Appendix D**)

Appendix D also contains copies of the screener used during the recruitment process as well as the **Discussion Guide** used by the moderator with the groups. The following section presents the key findings of the focus group study.

4.3 Key Findings

Equipment Types, Usages and Replacement Time

Most residential participants owned string trimmers. Some owned chainsaws, hedge trimmers and/or blowers. Most of these participants used their equipment about an hour a week. Most of these participants have the equipment for more than three years.

Most commercial participants owned a number of string trimmers, hedge trimmers and chainsaws. Some of them owned backpack blowers. Most commercial participants indicated that their equipment last about 2 to 3 years. Some indicated that smaller ones are used more often (5 days a week and 8 hours a day) last about a year.

Attitudes and Perceptions Toward Air Pollution

Most residential participants contended that there was some air pollution in greater Sacramento, although not to the extent that they are overly concerned. In fact, most of these participants admitted they have not made any efforts to improve the quality of air.

Generally, commercial participants agreed that air pollution is a problem in the Sacramento area. Commercial participants perceived air pollution in Sacramento to be somewhat more of a problem than residential participants. Most commercial users claimed they have made some efforts to improve the quality of air, e.g., planting trees, etc.

Both types of participants believed that the pollution generated by two-stroke lawn and garden equipment is insignificant, especially when compared to other areas, e.g., autos, agricultural burning, industry, etc.

Overall Reaction to Tier II Emission Standards

Most participants agreed that the new Tier II proposed technology would improve air quality. Without a detailed explanation of the proposed technology, a number of participants raised questions about the new technology.

Many were concerned, especially residential participants, that prices would be higher for the new equipment. Commercial participants asked about retrofitting equipment and continued availability of parts for current units. Commercial participants also were curious as to what type of monitoring practices would be established to ensure that the equipment is conforming to standards.

Reactions to Various Features with Prospective Tier II Product Technology

Most of the features for the proposed new technology did not produce a favorable disposition toward the impending regulation.

Less pollutant emission - Residential users believed this was a benefit from a personal perspective, although a number do not consider the operation of this equipment as posing any risk to their health because they either use these tools infrequently or take precautions (e.g., face mask).

Commercial participants believed that their industry is an inconsequential contributor to air pollution and, as such, were not motivated by this reason. However, several believed that improving the health of their employees is something they would support.

Reduced fuel consumption - This was not a compelling feature for either type of participant. Residential users claimed they use very little fuel each season. The potential of saving $150 for commercial participants was insignificant relative to their fuel expenses.

Eliminating mixing of gas and oil

This feature was not very attractive to residential users and, in fact, a drawback for the commercial segment. Residential users usually do the mixing process only once a season, which they did not view as tedious. Commercial participants claimed that having both two-stroke and four-stroke units will greatly increase the probability of their employees incorrectly fueling the various pieces of equipment, which would cause engine damage.

Warranty engine coverage - This potential feature was not very motivating and generated several issues and concerns. Some expressed doubts about the benefits of any product warranty. Many expected to pay a premium for the inclusion of a warranty. Some were uncertain who would determine if the unit no longer met requirements.

Heavier units - Most residential users did not perceive a hand-held unit weighing up to 20% more as problematic. Most commercial users claimed this was a major issue, particularly for the versions that are usually strapless and operated free-hand, i.e., chain saws and hedge trimmers.

More costly units - expected increase of about $35 for new technology versus a comparable unit available today was judged to be reasonable and not a barrier to purchase. In fact, commercial participants would be willing to pay a $50 increase for units in the $700 to $900 range.

Expected Behavior

By and large, most participants, residential and commercial alike, will abide by the new emission regulations and purchase the new products only when their current units must be replaced. Most participants strongly agreed that they would not purchase the new technology before their current units have expired.

4.4 Detailed Findings

Equipment Types, Usages and Replacement Time

Most residential participants owned string trimmers. Some owned chainsaws, hedge trimmers and/or blowers. Most of these participants used their equipment about weekly. Most of these participants have the equipment for more than three years.

> ...Weedeater...I use it at least once a week. Just me, I am the gardener. I've it about 4 years...

> ...I have weedwacker...I brought it about 5 years ago...I am the only one that uses it, I use it probably once every 10 days or so...

> ...I have a chain saw and a weedeater...I use them both about once a week...it is for a longer period of time, for an hour and half or so...

> ...I have 2 Echo weedeaters...couple of Homelite chain saws and a larger Echo chain saw. Shitowa pruners, trimmers that I use for hedges. Backpack two-stroke blowers stuff like that...

> ...I have a weedeater, infrequent use of that, every six months..I have a leaf blower approximately use that twice a month. I am the only one that uses that. The weedeater, probably use that twice a year or three times...It has been over four years or five years on both items...

> ...I have a power edger, which I use weekly during the season, and I am the only one that uses it...

> ...I have 2 chainsaws and a weedeater. The chainsaws get used 3 or 4 times a week. The weedeater gets used about once a month. My chainsaw I bought about 3 years ago and the other one I have had for about 6 years...

Most commercial participants owned a number of string trimmers, hedge trimmers and chainsaws. Some of them owned backpack blowers. Most commercial participants indicated that their equipment last about 2 to 3 years. Some indicated that smaller ones are used more often (5 days a week and 8 hours a day) last about a year.

> ...I am in the trade service business and we primarily uses chainsaws. We have mowers, small handhelds and the backpack type. Stringline trimmers, not very often. Gasoline powered hedge trimmers...The chainsaws, small medium and large, we replace the small chainsaws, they probably last us about 10 months...The medium ones will probably last us about 16 months...The larger ones might last us for about 4 to 5 years, because we don't use them everyday...

...We have 6 hedge trimmers, at least a dozen of chainsaws...probably a dozen backpacks and probably a dozen string trimmers...We don't put life expectancy because sometimes our hedge trimmers are working 5 days a week, 8 hours a day and they are going to be gone in a year or less...

...We have ...Echo PB400's, weedeaters, hedge trimmers...PB400, they last me about 3 years, weedeaters last about 3 years...The hedge trimmers, they go about 2 years before we wear them out...

...We probably have 8 to 9 blowers...10 different stringline trimmers, we also use a couple with the edger blade on them for edging. 4 to 5 chainsaws...Most of our equipment will last at least 3 years or more...

...I have about 30 chainsaws, big, little, small. I replace them about every 2 years...

Attitudes and Perceptions Toward Air Pollution

Most of the residential participants believed that air pollution in the Sacramento area is somewhat of a problem. However, many agreed that the situation is perceived to be not as problematic as other areas of California (e.g., Los Angeles). Some of the residential participants contended that the pollution situation in Sacramento is progressively getting worse, while others believed it to be improving. Some of the residential users who commented are as follows:

> ...I don't think that it is a huge problem in our area. Maybe elsewhere...
>
> ...I have been to LA and compared to LA, this is great. I just moved back from Salt Lake and this is the middle of the road...
>
> ...Myself, I run and I have noticed over the last few years that I get a little more dizzy. If I run at 8:30 in the morning, I know that it is the air quality. I know that it is getting worse, it is not getting better...
>
> ...I agree that it has improved, but I still think that the problem is outpacing the solution...
>
> ...You wouldn't have to come down the hill too many times in the afternoon up Placerville way to come down into this valley and do a second take or something like "Oh, my God". It is a mess...
>
> ...I think air pollution is becoming a very big problem. Sacramento is all of a sudden a Silicon Valley, we are getting a tremendous amount not only of automobiles with regards to all the residents

> that are moving over here, but the trucks...The rice fields are becoming a very big problem. Agricultural burning is becoming a very big problem. I think that we need to be cognizant that we are coming of age here in the Sacramento Valley...

Some of the residential participants claimed that they are quite concerned about the air pollution in their area, although most of these individuals said that they have made essentially no efforts to personally improve this situation. However, many of the resident participants admitted that they have basically not given much thought to air pollution. Some of these residential participants believed that a passive approach - simply adhering to governmental regulations and rules - was the only way to help improve the situation. Still others who have not made any personal efforts to improve the quality of air were at a loss to provide any reasons for their non-committed approach toward improving the quality of air in their area.

> ...I am concerned about it. I am very concerned. I would hate to have it get like LA. Me, personally, I know that Smog Check 2...I think that car pooling is important...
>
> ...I haven't put an effort into it. I can't say why.
>
> ...To be honest, I work around motors and engines all the time and that is the last thing that I want to deal with. So I don't really care about it...
>
> ...I guess if I was more concerned, I would put more of an effort into it. And I don't, so I must not be that concerned...
>
> ...I hadn't thought about it. I hadn't paid any attention to it. But now that you brought it up, you made me think...
>
> ...I think what you are able to do is pretty much governed by what the government forces you to do. For the gross polluters, there are smog checks, Smog Check 2. I think they have gone to real extremes, but that is beyond our control. That is about the limit of what you can do in participating in cleaning up the environment...

Very few of the residential members have made any concerted efforts toward helping to improve air quality. Most of the participants were unlike one individual who described his efforts to replace his two-stroke equipment as one means to personally help his situation.

> ...With the asthma and stuff, I don't like breathing in that exhaust any more than anyone else does. I have gone to the measure of actually replacing my gas powered stuff when they break with electric because of this...

Overall, individuals from the commercial sector believed that air pollution was a more severe problem than perceived by residential participants. Likewise, relative to the residential users, the commercial participants expressed a greater concern for air pollution and purport to be doing more to help improve air quality, e.g., planting trees, car smogging, eliminate burning wood, etc.

> ...I do a lot of lawns and I take care of a lot of shrubs and trees. I am taking a lot of carbon monoxide and everything else and changing it to oxygen. Plus, on top of that, I use a lot of pine sugar in my lawns to help it...
>
> ...I use to burn wood in my wood stove until about a month ago when I quit doing it. So that I am adding less pollution...

The clear majority of the residential and particularly the commercial users perceived that the emissions produced from two-stroke hand held equipment is minor and insignificant compared with other industries and products, e.g., agricultural burning, chemical companies, auto and trucks, etc. A typical response was provided by the following residential user:

> ...If you are talking about all the things in the world, there are a whole lot of things that would fall much further than my poor chain saw or weedeater...

Two commercial users provided the following typical reactions:

> ...Because I don't think that we are a big part of the pollution problem. I think we are a part of it, but I don't think that we are a big part...
>
> ...I think we are a really small part. I think automobiles and manufacturing is a lot larger than we are...

It was explained to some of the participants that handheld equipment constitutes 62% of the emissions for the entire utility equipment category. This fact did not appear to appreciably impact or impress participants, mainly because they view the utility category, overall, as an inconsequential contributor to air pollution.

> ...Something like it spits out 62% of the pollutants of all the other stuff that you use, that is not enough. Because 60% if all the other stuff that you use is nothing. When you say 60% of this group of tools, lawn tools, and that grouping of lawn tools is nothing, then 60% of nothing. That is not enough...

Overall Reactions to Tier II Emission Standards

All groups were told that the California Air Resources Board has proposed Tier II emission standards for hand-held lawn and garden equipment that would take effect in 1999. At this stage of the sessions, no further explanation or description was provided.

Strictly based on this information only, many of the residential participants were skeptical that appropriate decisions would be made by the government that would be mutually beneficial for the environment and the economy. Some expressed concerns that the government is always after individuals rather than industries and factories that are perceived as the major causes of air pollution.

> ...I don't really trust the air resources board to make an intelligent assessment of what is necessary. It is a good balance between charging for a clean environment and at the same time not shorting industry that supports the people who live in this area...
>
> ..I feel that we are going into this and it is a political thing. It is a hot thing to talk about right now...We run out and do all these things and in 2, 3, 4 years down the road we find that we are going in the wrong direction...
>
> ...I think it is a crock. I think it is a big crock because big industry is allowed to trade, sell and buy pollution credits...
>
> ...I can see that we have heard about it and this is how the big bureaucracy rolls and I agree that they are coming down on the little guy rather than going after the big polluters...

Initial reactions from the commercial respondents were primarily unfavorable, mainly because they assumed the expected alternative technology (i.e., battery powered or electric) would be options that they perceive to be inadequate to perform the work required for their jobs. Some became extremely annoyed because they believe their industry is very visible and unjustly the current target of the ARB rather than other sources that are perceived to produce considerably greater pollutants into the air, e.g., agricultural burning, mowers, autos, trucks, etc. Not only were many of these participants concerned that the aforementioned options would be impractical, some of the participants from smaller businesses were concerned that these options would be unaffordable.

> ...We couldn't do it with electrical, there is no possible way...
>
> ...Very negative. I don't know how we can do our business without gasoline powered equipment. Battery powered, out of the question. Electrical cords in a tree is going to be unbelievably dangerous. I don't know how we will do our business...

> ...But a chain saw in a tree won't work, battery powered or electric, it won't work. It is my belief. If it had been a good option, we would have seen it a long time ago...
>
> ...And you are going to have a generator somewhere running and polluting the air anyway to give it power...

Subsequent to explaining that the new technology that would be available would be gas powered options that may be either two and/or four-stroke with catalytic converters, both residential and commercial participants started raising a number of questions. Although many agreed that the proposed technology would produce equipment that would produce less air pollution, several concerns were raised.

Both groups believed that the price of the new equipment would be more expensive than comparable current two-stroke options. This did not appear to be a concern with the commercial participants, although it was viewed as a possible barrier to acceptance, pending the actual price increase, for residential users.

A number of commercial participants questioned if their current equipment could be retrofitted. These participants believed that if they were unable to retrofit that they would have to discard and cease using their current equipment. Some of the commercial participants also queried if parts for the current equipment would continue to be made available and, if so, for what duration.

Some other commercial users were unable to understand how the monitoring system would be developed to ensure that all new equipment adhered to the new standards. Some believed that a smog check type of system would be installed while others believed that a registration would be necessary. Regardless of the means, some participants expressed frustration over any means to monitor compliance.

> ...How are they going to make sure they are all in operational condition and running up to...how are they going to enforce it, make sure that it is still doing the job it was meant to? Keeping the air pollution down, how are they going to monitor and make sure that they are all properly tuned and doing what they are suppose to be doing?...

A few commercial users were puzzled in regard to how the new four-stroke technology would be used for chain saws, which are frequently used at various angles.

> ...the four-stroke wouldn't work in terms of a chain saw or anything that you turn upside down, because you have a crank case in the four-stroke and when you turn it upside down, the oil fouls the engine and it doesn't work. Chain saws and hedge trimmers,

> you got to be able to turn them on their side. Unless there is great technology, I have some serious doubts...

Reactions to Various Features with Prospective Tier II Product Technology

Participants in each of the groups were asked for feedback regarding several features that may be present with the new Tier II products. The features that were probed are as follows:

- Reduced fuel consumption
- Eliminate procedure of mixing oil and gas (four-stroke only)
- Less emission pollutants
- Warranty engine coverage
- Heavier units
- More costly units

Reduced fuel consumption - In the residential user groups, participants were told that the new equipment would use less fuel, while in the commercial group participants were told that fuel savings would be approximately $150 over the life of one piece of equipment. Among both types of users, saving fuel did not appear to be a motivating feature among the majority of participants. Most of the residential participants said they use very little gas to run their various equipment.

> ...It doesn't burn that much fuel to begin with. It doesn't consume that much gas that you would use in a month's time. Maybe 2 gallons...

> ...It is not hurting the pocket any...

> ...Even with the amount of two-strokes that I use, and I use quite a few of them, it only seems to be about a $20 or $30 a year savings at most...you get a gallon of gas and it runs them forever...

Many of the commercial users contended that the potential of saving $150 over the life of each piece of equipment was relatively insignificant compared with their overall fuel expenditures and other equipment operating costs.

> ...It is not a big number considering how much money we spend and we use. It is just not worth it...

> ...It doesn't motivate me. We have so many other overheads that this is just a drop in the bucket...

> ...You are going to save yourself a couple of dollars a month over the life expectancy of the piece of equipment. On fuel cost, we go through $5,000, $6,000 a month and that is everything that we've got. You are talking about...it is a small amount...

Nonetheless, a couple of commercial users perceived value in consuming less fuel, particularly with those who have experienced short life expectancy (10-12 months) with their equipment due to demanding and excessive use.

> ...Something that is going to save me $150 a year per piece of equipment is a substantial savings. Just that savings right there could probably buy 2 new pieces of equipment or 3 pieces of equipment a year...

Eliminating procedure of mixing gas and oil - Participants were presented with the feature of eliminating the gas and oil mixing procedure if they opted for the proposed four-stroke technology. Generally, most residential users did not see this as a substantial benefit, especially since the mixing task is a once a year procedure. However, a couple of residential participants believed this feature to be potentially more convenient and easier than the mixing required for a two-stroke.

> ...I fill my gas tank probably once a season. I have a 2 1/2 gallon gas can, I mix it. Unless I go out and harvest wood, that gas will stay there. I probably will loan it out...

Most of the commercial users did not perceive this as a benefit but potentially a very expensive drawback to their current operation, especially during the phasing in of four-strokes for current two-stroke versions. Quite a few of these commercial users believed that introducing the new four-stroke technology along with their current two-stroke equipment would possibly lead to employees incorrectly fueling the two types of units, which would result in costly engine damage and repairs. This situation is particularly problematic since many of the commercial users frequently hire inexperienced seasonal employees who are unfamiliar with the preparation and maintenance of the equipment.

> ...You bring up new problems. We have been teaching our guys to mix gas and oil for their entire career and now we are saying don't mix gas and oil. So we have some that mix with gas and oil and some not mixed. It is going to come backwards and forwards and we are going to be in more trouble. Guys are going to put gas and oil mix in a four-stroke engine. They are going to put clear gas in a two-stroke engine. They are going to get confused...
>
> ...It is just not going to work. A lot of the guys don't check the oil in the trucks. I tell them everyday, before you start that thing,

> check the oil. They don't do it and I have to do it myself. I would just rather be on the safe side and have a two-stroke...

<u>Less pollutant emission</u> - All of the groups were told that the new technology would reduce harmful pollutants by 60%-80% compared to units that were initially available in 1995 and four times as less polluting relative to comparable equipment manufactured before 1995.

Overall, this feature was perceived to be a benefit for residential participants. Some of the residential participants viewed this feature as beneficial, more so from a "healthier for me" perspective rather than for improving the quality of air in the environment.

> ...When I think about this, it is almost personal. I don't think of it as I am doing my part to cut down on pollution in the Sacramento Valley. That is the least of my concerns. I am doing it for me. It makes me feel better about the way that I do my yard work...

> ...If I have to buy another piece of equipment, I would consider all the health benefits. That would be a strong reason for me to go and buy that particular unit versus an old fashion one...

> ...less emissions is a good thing. I am sucking in this air and I have asthma. So it is going to be better for me...

However, a number of residential users did not find this feature as particularly motivating. Some users said they currently take precautions regarding their personal health (e.g., facial masks), while other believed they do not use their equipment with any type of regularity to place their health or the environment in jeopardy.

> ...If I was using it more often, 3 or 4 times a week, then it would be a different factor. I use it one day a week and I can't believe that is going to shorten my life expectancy that much using the power equipment one day a week...

> ...I think that for myself looking at this new equipment would be great but I wouldn't replace it with one of those new things unless my old thing was broke. I wouldn't dig into my pocket for health reasons, less pollution, better engine or anything unless I need to...

The commercial participants did not perceive the feature of cleaning up the environment as motivating or particularly germane to their industry. These participants contended that their "industry" is one that is relatively inconsequential from an air pollution viewpoint. This group believed many other industries are polluting the air to a considerably greater amount than lawn

and garden equipment. However, a few perceived this feature as a benefit. One commercial participant believed this feature would be a positive "sales pitch" for his customers.

> ...If they aren't working on the other half of this emission thing, automobiles and all the rest of the stuff, what little bit they are going to save from us ain't going to amount to nothing. So I believe that we are just getting more regulations...
>
> ...I feel that our industry is unfairly targeted, just to go buy and have a new piece of equipment because it is going to clean the air or is going to put out less pollutants than we do. I don't think that it means that much to me...
>
> ...The landscaping industry is not a smoke stack industry. I don't think that we should be a target. However, it is important to me to pollute less. If there is something that we can do, then let's do it...
>
> ...I thought it would be a good selling factor towards clients. To my clients, that we are out there trying to help the environment, not only by doing proper cuts and stuff, but that we care. They like that kind of stuff...

Truly motivating for most of the commercial participants was the fact that the new technology would be a healthier alternative for the operators compared with the current equipment. Many of the commercial users appeared to be genuinely interested in being able to provide their employees with a healthier alternative.

> ...employees... I want them healthy. I want to see them exercise 15 minutes before they go to work, get their blood running, get rid of the alcohol from Saturday and Sunday...
>
> ...We are always doing the safety issues, trying to make it better for the employees, stuff like that. So that would just be an easy one to say this is definitely better for them. Let's do it...
>
> ...I really care, trying to make the thing safer for other people out there...

<u>Warranty engine coverage</u> - It was explained to all participants that if any engine part malfunctions on the new technology units, it will not meet the 1999 emission standard, which in essence means that there will be a possible engine warranty from 2 up to 5 years for these new products.

The residential users were very skeptical about this feature. Some users are simply leery of the "so-called" benefits of a product warranty. Quite a few users were uncertain how they would determine if the engine no longer would meet requirements. These individuals were concerned with who would determine the need for warranty work. Others were concerned that some manufacturers would not adhere to the regulations stipulated by the ARB.

> ...I think that is the biggest piece of sales crock in the world. You buy a new car to last 10 years and you take it in and the warranty work and they will say subsection A paragraph 13 line 27, this is not covered because of...I think that is a sales crock somebody is selling somebody...
>
> ...So you are going to self-certify as the owner of this device, you are going to be in a position to determine when it no longer is up to specs, is that it?...
>
> ...How would you know that it is operating? Would you bring it in and have it checked? Or is it something that at some point in time someone will be driving by and decide that it is not operating correctly and the Air Resources Board emblem on the side of his car and he gets out and says here, go get this checked. What are you talking about here?...
>
> ...If the manufacturer is going to fulfill the standards at the time, how are they going to know that this is going to fall below standard for them to force the manufacturer to...The government, why are they doing this without the requirement that you take and put it out to have it checked? What you are saying is that you are saddling the homeowner with the responsibility to take this sucker down to these guys and put it on the smog...
>
> ...You have to understand that if a bureaucracy requires a manufacturer do certain things...It is called the bottom line, stockholders, it's called profitability. Ultimately who is going to pay for what some air resource nerd is dictating to the manufacturer of a lawnmower or chain saw. We are going to have to pay for that. The manufacturer is not out to appease and please the Air Resources Board, they are out to make a buck...

In general, the commercial participants were not receptive to any type of warranty, mainly because they anticipated the costs to be directly passed-on to the buyer.

> ...if they are going to give us this warranty, they are also going to charge us for it in the beginning. That is going to be reflected in our initial cost...

> ...I use to work for a manufacturer and when those kind of things came up, let's raise the price to take care of everything. They will put a dollar amount to it. All it does is cost us more money...

Heavier units - All participants were asked to react to the new technology potentially being 1 to 2 pounds heavier for a 10 pound unit. Overall, residential customers did not perceive a 10% to 20% increase with any of their current hand-held garden equipment to be a major issue. Many of these participants said that because of the infrequent use (i.e., weekends) and the usually short duration, the few extra pounds would not be a problem. Nonetheless, one of the women was uncertain if the added weight would be problematic. Additionally, a few men said that the extra weight may be an issue when they are older.

> ...I don't think that it is going to be that big a factor for us weekenders...

> ...I don't see it as a problem. It is not that heavy, you still won't notice it...

> ...10% isn't anything great...

> ...No. I don't think that a pound or two on a chain saw is going to make a difference. If I am cutting trees, I can only hold a chain saw for so long anyhow...

> ...I am a woman and things are heavy enough for me out there and I work the yard a lot. But my muscles aren't what a man's muscles are...I don't know. I don't know if it would be a problem or not...

> ...I figure just a little added weight to the equipment won't hurt me right now. Later on in the future it will, but right now it won't...

According to most of the commercial participants, the extra weight is a major issue. Their perceived problem is not with the equipment that utilizes straps or shoulder harnesses but with units that are free standing such as chain saws and hedge trimmers. Some of the current equipment is already perceived to be heavy and at times difficult to handle, particularly when one hand is required for the particular task.

> ...You don't want a really heavy saw in the tree. They are heavy enough now, anything that is 2 pounds more, it is really going to be a hassle to work with...
>
> ...I was thinking more of it as a demotivator...If you are up in a tree, it is going to be longer, the guys are going to get tired faster, you are going to have more wrist problems, slowing down everything...
>
> ...It would be a major barrier because we are on ladders trimming hedges and trees and things like that and it is bad enough now, hanging over one of those things and using your hand and the hedge sheers and stuff. Now you are going to add another pound or so onto it. That is going to put an impact on the operator...
>
> ...The blowers have shoulder straps we wear . Weedeaters, if they weigh a pound or two, you can put a shoulder strap (on)...T-he chain saws they are free hand, they have to be free hand because if they slip or fall, the first thing you do with a hedge trimmer or chain saw, you throw it away...

<u>More costly units</u> - All of the respondents were told that the new technology would cost about $35 more relative to a similar two-stroke version currently available. The added cost was perceived by the majority of participants, residential and commercial alike, not to be of any concern. Many of the residential customers anticipated to pay around a 30% premium for the new technology. The expected increase appeared to meet their expectations and was acceptable.

Some of the residential participants who commented on the expected incremental charge said the following:

> ...$35 is not that much more to pay if it is going to do all that you say it is going to do...
>
> ...I was thinking of the $100 string trimmer. When you said $35, that is right in the ball park...
>
> ...Not an issue. $35 isn't an issue. It is a one time purchase, pretty much for 4 or 5 years. You are talking about a 4 or 5 year warranty on it, better efficiency. $35 isn't that big of a deal...

A couple of typical commercial user comments follow:

> ...Because we are going to have to get it anyway. So if they hold the price down to $35, that is pretty good. And we are going to save that much on fuel anyway. A couple of dollars a week, so it

> is going to help out. It is going to be mandatory that we get it, it is only going to go up $35...
>
> ...Yes if that is all that we are paying is $35 for a 5 year warranty, OK. All of the things being equal, $35 is a drop in the bucket...If I could get a 5 year warranty for $35 on a piece of hand-held equipment, that is fine...

When probed regarding a $50 increase, most residential participants claimed that this level exceeded their threshold of an equitable trade-off and also was slightly above their expectations. However, most commercial users found the $50 increase also acceptable, especially when purchasing equipment in the $700-$900 range.

Corporate averaging - Residential users were presented with the concept of corporate averaging. The idea generated a mixed reaction among the participants. Some perceived this approach to be a competitive maneuver that could serve as an acceptable phase in/phase out approach. Others believed the approach was not in the best interest of improving air quality because it would continue to permit the sale of the existing units.

Expected Behavior

Following a discussion of the aforementioned prospective features of the new technology, participants were asked what they would expect to do in regard to buying gas powered hand-held lawn and garden equipment. Generally, most of the users, residential and commercial, will replace their units as needed. Essentially all of the users said that they will abide by the new emission regulations and purchase the new technology if available and when their older units are required to be replaced. The key for most of the users is that they will not purchase the new equipment prematurely, i.e., before the life-expectancy of their current equipment has expired.

Some of the residential participants who commented:

> ...I am not going to go out, because I am going to cut down pollution and replace all my equipment, no way. If the equipment breaks down, when I get ready to replace it, and the new will be there, I will not have an option. I will be forced to buy what the manufacturer has on the market. Or what the government allows the manufacturer to make...
>
> ...If the equipment needs to be replaced, replace it with what is on the market. I am not going to make a trip to the store to buy something that I have already and it is still working...

Some commercial users believed they would start buying the new equipment as it becomes available believing that the older units may not be used beginning in 1999. Some claimed they

will bide their time and assess the situation as time progresses and further changes may develop. Some commercial users comment:

> ...The expected behavior is that we are going to have to follow the law, what is expected of us...
>
> ...Basically, it is coming and a little guy like us can't stop it. So we have to keep the rest of what is coming out and, if possible and feasible, start buying now so we have a couple of years to start slowly doing that transition instead of in '99 when we are forced to. So we are prepared for the change when it comes...
>
> ...A wait and see attitude. Things are going to change even as we are talking right now. If they don't, then we will go out and do what we have to, but I think things are going to change. There are going to be more alternatives, more options and more exceptions...

5. REFERENCES

ABC Supply, (1996), telephone price quotation, October, 1996.

ARB (1990), "California Exhaust Emission Standards And Test Procedures For 1994 And Subsequent Model Year Utility And Lawn And Garden Equipment Engines," State of California Air Resources Board Hearing, December 14, 1990.

Allied Signal (1996), conversation with John Howitt, October 1996.

American Metal Market, 1996. Metal price data, August 19, 1996.

Amstead, B., P. Ostwald, and M. Begeman, 1976. Manufacturing Processes, Seventh Ed., John Wiley and Sons, NY.

ARB, 1990. Technical Support Document for California Exhaust Standards and Test Procedures for 1994 and Subsequent Model Year Utility and Lawn and Garden Equipment Engines, California Air Resources Board, 1990.

Blair, G.B. (1996), "Design and Simulation of Two-Stroke Engines," Society of Automotive Engineers, Warrendale, PA, 1996.

C.I. Hayes, (1996), information from sale person and literature, 1996.

Chan, L.M. and Weaver, C.S. (1996), "Assessment of Emission Control Technology and Cost for Engines Used in Handheld Equipment", Revised Final Report to the California Air Resources Board, Engine, Fuel, and Emissions Engineering Inc., Sacramento, CA. August, 1996.

Chan, L.M. et. al (1996), "Cost Study for Phase Two Small Engine Emission Regulations,", Draft Final Report to the U.S. Environmental Protection Agency, Engine, Fuel, and Emissions Engineering Inc., Sacramento, CA. and ICF, Fairfax, VA. October 25, 1996.

Conley, J., and Hoffman, R. (1996), conversation with Professor Conley of Northwestern University and Mr. Hoffman of the Smart Engineering, September 1996.

Conley, J.G., et al., 1996-2, "The Development of a Durable, Cost Effective, Overhead-valve Train for Application to Small, 4-Cycle Engines," SAE SP 1195, Society of Automotive Engineers, Warrendale, PA, 1996.

Conley, J.G., et al., 1996-3, "The Optimization of a 26.2 cc, OHV, 4-Cycle Engine Aspiration System to Achieve 1999 CARB Emissions Standards," SAE SP 1195, Society of Automotive Engineers, Warrendale, PA, 1996.

Conley, J.G., et al., 1996-1, "The New Ryobi 26.2 cc, OHV, four-stroke Engine for Handheld Equipment Application," SAE SP 1195, Society of Automotive Engineers, Warrendale, PA, 1996.

Fulesday, (1996), information from sale person and literature, 1996.

Hess-MAE (1996), conversation with Robert Chew, October 1996.

Honda, (1996), conversation with Tom Bingham, 1996.

Huffman, R. (1996), Smart Engineering, phone conversation, 1996.

Jack Faucett Associates, 1985. "Update of EPA's Motor Vehicle Emission Control Equipment Retail Price Equivalent (RPE) Calculation Formula," Rept. No. JACKFAU-85-322-3, Jack Faucett Associates, Chevy Chase, MD.

Kreager, (1996), information from sale person and literature, 1996.

L.H. Lindgren, 1978. Cost Estimations for Emission Control Related Components Systems and Cost Methodology Description, EPA-460/3-78-002, U.S. EPA, Ann Arbor, MI.

Laimbock, F.J., and Landerl, C.J. (1990), "50cc Two-Stroke Engines for Mopeds, Chainsaws and Motorcycles with Catalysts," SAE Paper No. 901598, Society of Automotive Engineers, Warrendale, PA, 1990.

Monaich, (1996), information from sale person and literature, 1996.

Muller Weingarten (1996), conversation with Kent Setze, October 1996.

Ostwald, P.F., 1984. Cost Estimating: Second Edition, Prentice-Hall, Englewood Cliffs, NJ.

Prince Machine (1996), conversation with Rob McInerney, October 1996.

Putnam, Hayes, and Bartlett, Inc., 1984. "Report on EPA's Retail Price Equivalent Methodology," Memo to Willard Smith, U.S. EPA, Office of Policy Planning and Evaluation.

Seway, (1996), information from sale person and literature, 1996.

Sheffield Progressive (1996), conversation with Peter Smith, October 1996.

Spec Cast (1996), conversation with Ken Bell, September 1996.

United Emission Catalyst (1996), conversation with Michael Hobbs, October 1996.

Winchell, W., 1989. Realistic Cost Estimating for Manufacturing: Second Edition, Society of Manufacturing Engineers, Dearborn, MI.

APPENDIX A: LIST OF CONSTRUCTION AND FARM EQUIPMENT PREEMPTION

Construction and Farm Equipment Preemption

Previously Classified Off-Road Equipment

(a) Equipment equipped with engines less than 25 horsepower. All equipment types equipped with engines under 25 horsepower are presumed not to be construction or farm equipment, with the exception of the following equipment types, which have been determined to be construction or farm equipment:

Aerial devices: vehicle mounted
Asphalt recycler/reclaimer, sealer
Augers: earth
Back-hoe
Backpack Compressors
Baler
Boring machines: portable line
Breakers: pavement and/or rock
Brushcutters/Clearing saws 40 cc and above (blade capable only)
Burners: bituminous equipment
Cable layers
Chainsaws 45 cc and above
Chippers
Cleaners: high pressure, steam, sewer, barn
Compactor: roller/plate
Compressors
Concrete buggy, corer, screed, mixer, finishing equipment
Continuous Digger
Conveyors: portable
Crawler excavators
Crushers: stone
Cultivators: powered
Cutting machine
Debarker
Detassler
Drills
Dumper: small on-site
Dusters
Elevating work platforms
Farm loaders: front end
Feed conveyors
Fertilizer spreader
Forage box/Haulage and loading machine
Forklifts: diesel and/or rough terrain
Harvesters, crop
Jackhammer
Light towers
Mixers: mortar, plaster, grout
Mowing equipment: agricultural
Mud jack

Pavers: asphalt, curb and gutter
Pipe layer
Plows: vibratory
Post hole diggers
Power pack: hydraulic
Pruner: orchard
Pumps 40 cc and above
Rollers: trench
Saw mill: portable
Saws: concrete, masonry, cutoff
Screeners
Shredder/grinder
Signal boards: highway
Silo unloaders
Skidders
Skid-steer loaders
Specialized fruit/nut harvester
Sprayers: bituminous, concrete curing, crop, field
Stump cutters, grinders
Stumpbeater
Surfacing equipment
Swathers
Tampers and rammers
Tractor: compact utility
Trenchers
Troweling machines: concrete
Vibrators: concrete, finisher, roller
Welders
Well driller: portable
Wheel loaders

(b) Equipment equipped with engines 25 horsepower or greater. Equipment types equipped with engines 25 horsepower or greater are presumed to be construction or farm equipment, with the exception of the equipment types listed below, which have been determined not to be construction or farm equipment.

Aircraft Ground Power
Baggage Handling
Forklifts (not rough terrain) less than 50 horsepower, not powered by diesel engines
Generator Sets
Mining Equipment not otherwise primarily used in the construction industry
Off-Highway Recreational Vehicles
Other Industrial Equipment
Refrigeration Units less than 50 horsepower
Scrubbers/Sweepers
Tow/Push
Turf Care Equipment

APPENDIX B: RYOBI PART LISTS

CYLINDER HEAD ASSEMBLY - MODELS 960r-970r-990r

RYOBI AMERICA CORP.

WESTERN REGIONAL OFFICE:
GARDEN PROMENADE
9699 CHAPMAN AVENUE
GARDEN GROVE, CA 92840
TELEPHONE: (714) 539-3170
TELEFAX: (714) 539-3560

CORPORATE OFFICE:
5201 PEARMAN DAIRY ROAD
P.O. BOX 1207
ANDERSON, SC 29622-1207
TELEPHONE: (803) 226-6511
TELEFAX: (803) 261-9435

Item	Part No.	Description
1	181025	Screw, Valve Cover
2	181026	Hose, Breather
3	181027	Breather Assembly
4	181028	Cover, Valve
5	181029	Gasket, Valve Cover
6	181030	Nut, Rocker Adjusting
7	181031	Pivot, Rocker Arm
8	181032	Arm, Rocker
9	181033	Rod, Push
10	181034	Nut, Hex 5M
11	181035	Washer
12	181036	Guide, Push Rod
13	181037	Retainer, Valve Spring
14	181038	Spring, Valve
15	181039	Head, Cylinder
16	181040	Valve
17	180852	Spark Plug
*	181041	Cylinder Head Assembly (items 13-16)
*	181042	Short Block Assembly (all items from pages 2 & 3)

* not shown

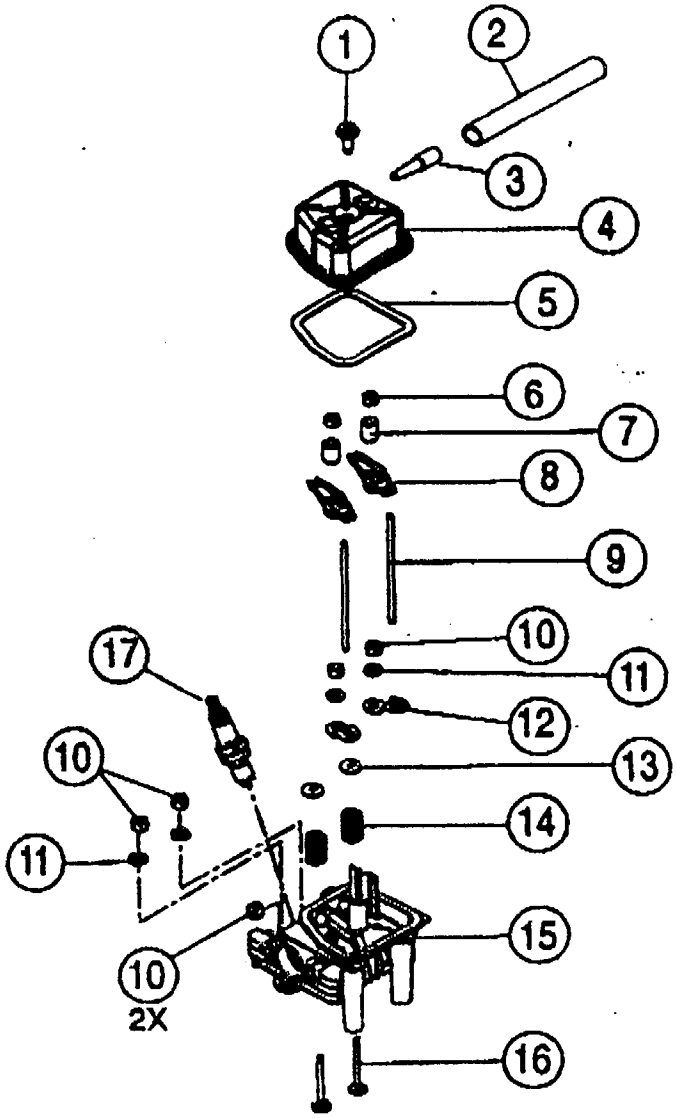

CYLINDER & CRANKCASE ASSEMBLY - MODELS 960r-970r-990r

(Serial no. 403026296 and greater)

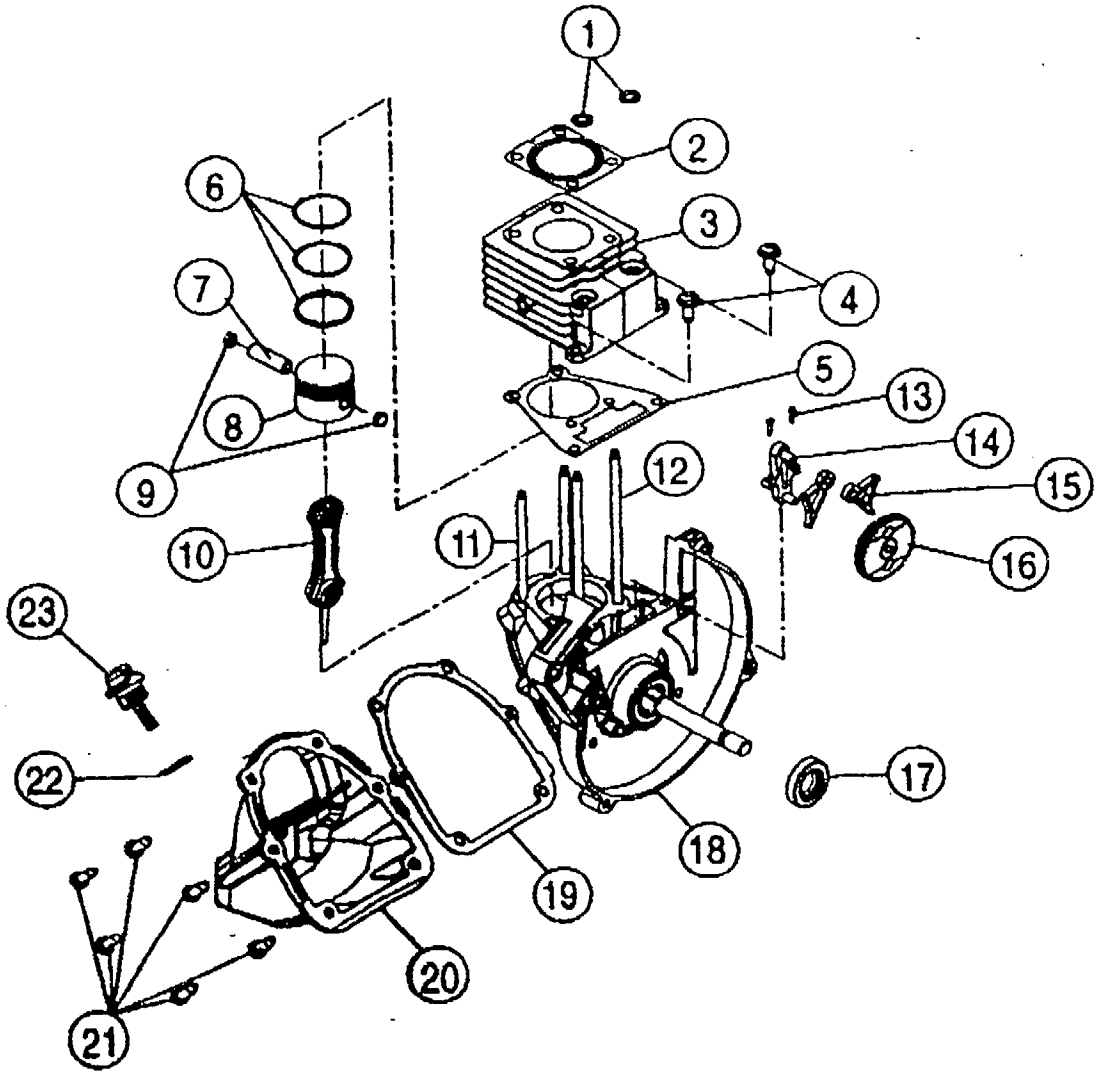

Item	Part No.	Description
1	181000	O-Ring, Push Rod Tube
2	181001	Gasket, Cylinder Head
3	181002	Cylinder
4	181003	Screw, M5 X 18.7mm
5	181004	Gasket, Cylinder
6	181005	Piston Ring Set
7	181006	Pin, Wrist
8	181007	Piston
9	181008	Button, Wrist Pin
10	181009	Rod, Connecting
11	181010	Cylinder Stud (83.5mm)
12	181011	Cylinder Stud (115.5mm)
13	181012	Screw, Cam Bracket
14	181013	Bracket, Cam

Item	Part No.	Description
15	181014	Follower, Cam
16	181015	Cam Gear
17	181016	Seal
18	181017	Crankcase W/Power Shaft (includes items 11, 12 & 17)
19	181018	Gasket, Oil Pan
20	181019	Pan, Oil
21	181020	Screw, M5 X 15.8mm (6 required)
22	181021	O-Ring
23	181022	Plug, Oil Fill (includes item 22)
*	181023	Piston and Rod Assembly (items 6-10)
*	181024	Engine Gasket Kit

* not shown

CARBURETOR & MUFFLER ASSEMBLIES - MODELS 960r-970r-990r

(Serial no. [illegible] and greater)

RYOBI AMERICA CORP.

WESTERN REGIONAL OFFICE:
GARDEN PROMENADE
9699 CHAPMAN AVENUE
GARDEN GROVE, CA [illegible]
TELEPHONE: (714) [illegible]-3170
TELEFAX: (714) [illegible]-3560

CORPORATE OFFICE:
5201 PEARMAN DAIRY ROAD
P.O. BOX 1207
ANDERSON, SC 29622-1207
TELEPHONE: (803) 226-6511
TELEFAX: (803) 261-9435

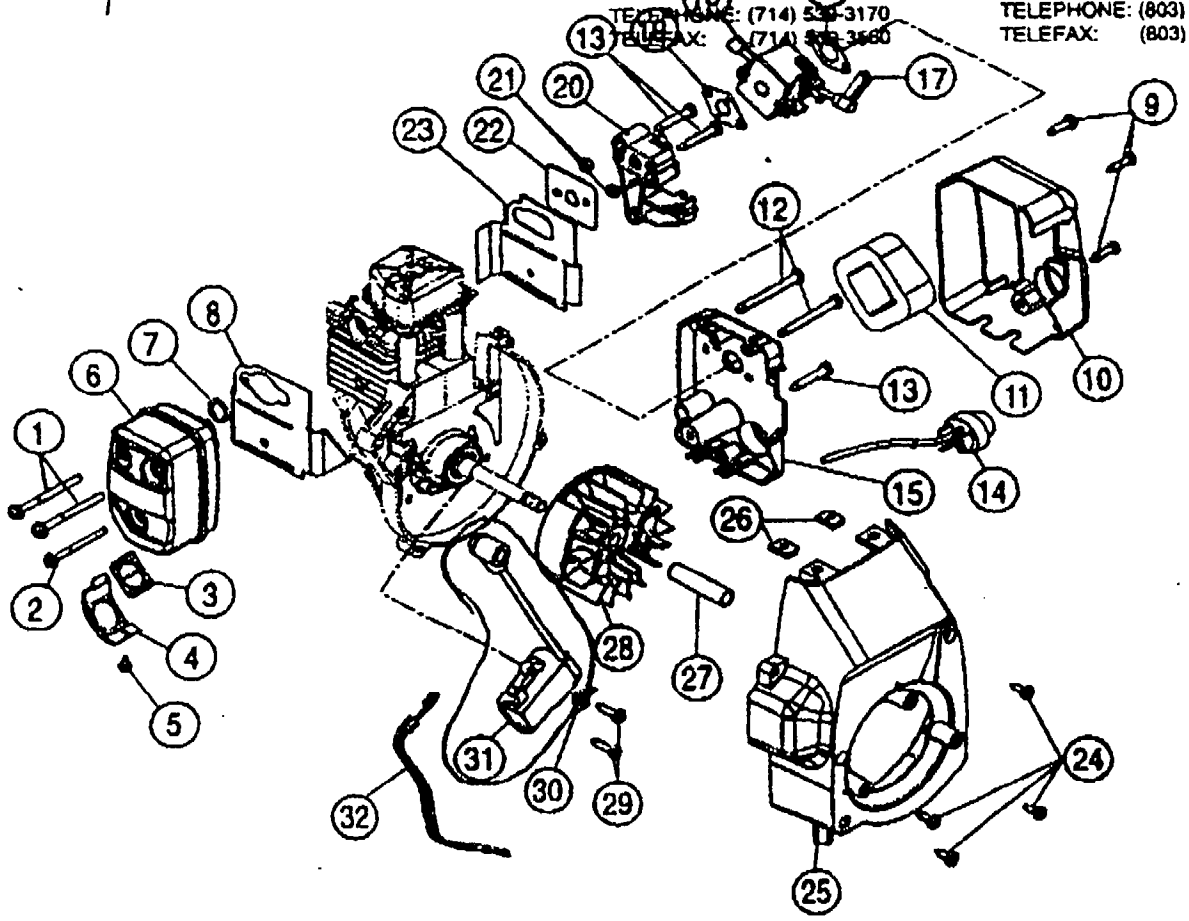

Item	Part No.	Description
1	181043	Screw, Muffler Mounting
2	181044	Screw, Muffler Mounting
3	180890	Screen, Spark Arrestor
4	181045	Cover, Screen
5	181046	Screw, Screen Cover
6	181047	Muffler (includes items 1-5 & 7)
7	181048	Gasket, Muffler
8	181049	Baffle, Muffler
9	181050	Screw, Air Filter Cover
10	181051	Cover, Air Filter
11	180350	Filter, Air
12	181052	Screw, Air Filter Base (52.5mm)
13	181053	Screw, M5 X 29mm
14	181054	Primer and Line Assembly
15	181055	Base, Air Filter
16	181056	Gasket
17	181057	Lever, Choke
18	181058	Carburetor W/Choke Lever
19	181059	Gasket

Item	Part No.	Description
20	181060	Insulator, Carb Mount
21	181034	Nut, Hex 5M
22	181061	Gasket, Intake
23	181062	Baffle, Intake
24	181003	Screw, M5 X 18.7mm
25	181063	Housing, Fan
26	181064	Nut, Tinnerman
27	181065	Spacer
28	153624	Flywheel
29	181066	Screw, Module
30	611063	Tab, Ground
31	181067	Module, Ignition
32	181094	Lead, Wire 18" (2 required)
•	610676	Key, Flywheel
•	180142	Flywheel Starter Pawl Repair Kit
•	181068	O.E.M. Carburetor Repair Kit
•	181069	Gasket-Diaphragm Repair Kit

• not shown

Issued 3/94

CLUTCH, STARTER MODULE & FUEL TANK ASSEMBLIES - MODELS 960r-970r-990r

(Serial no. 403026296 and greater)

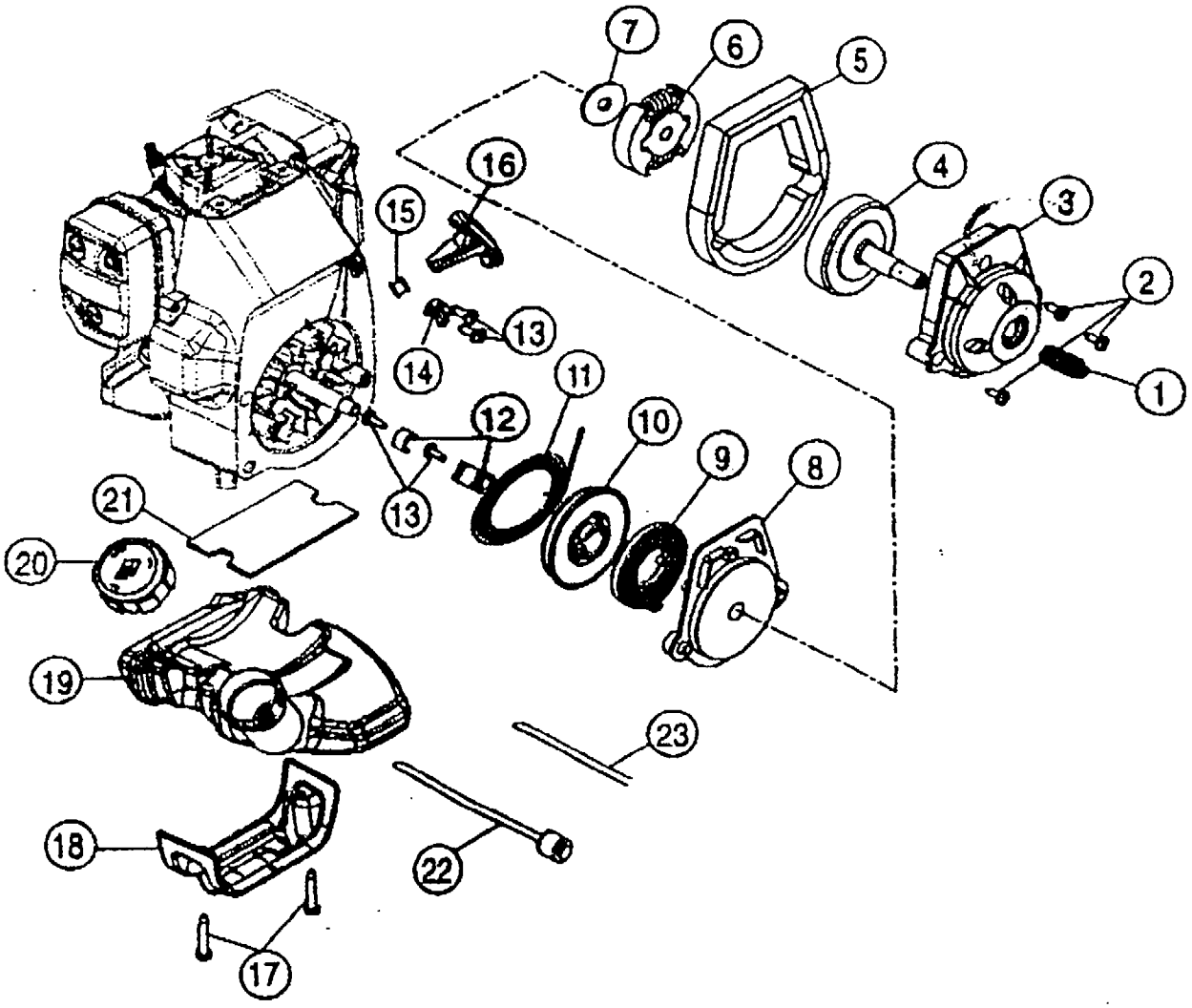

Item	Part No.	Description
1	612468	Spring, Compression (970r and 990r only)
2	181070	Screw, M5 X 32mm
3	181071	Housing, Clutch
4	180232	Drum, Clutch
*	181102	Clutch Housing Assembly W/Drum (Items 3 & 4)
5	181072	Isolator
6	181073	Clutch
7	181074	Washer, Clutch
*	181087	Starter Module Assembly (Items 8-13, 15 & 16)
	181075	Housing, Starter
9	613102	Spring, Starter
10	180535	Pulley, Starter
11	613103	Rope, Starter

Item	Part No.	Description
12	181076	Retainer, Starter Pulley
13	181077	Screw, M4 X 12.7mm
14	181078	Retainer, Rope Guide
15	611061	Guide, Rope
16	181079	Handle, Starter
17	181080	Screw, Fuel Tank Bracket
18	181081	Bracket, Fuel Tank
19	181082	Tank, Fuel (Includes items 20, 22 & 23)
20	181083	Cap, Fuel
21	181084	Pad, Fuel Tank
22	181085	Fuel Line Assembly W/Filter
23	181086	Line, Fuel Return

* not shown

HANDLE & UPPER BOOM ASSEMBLY - MODELS 960r-970r-990r

(Serial no. 403026296 and greater)

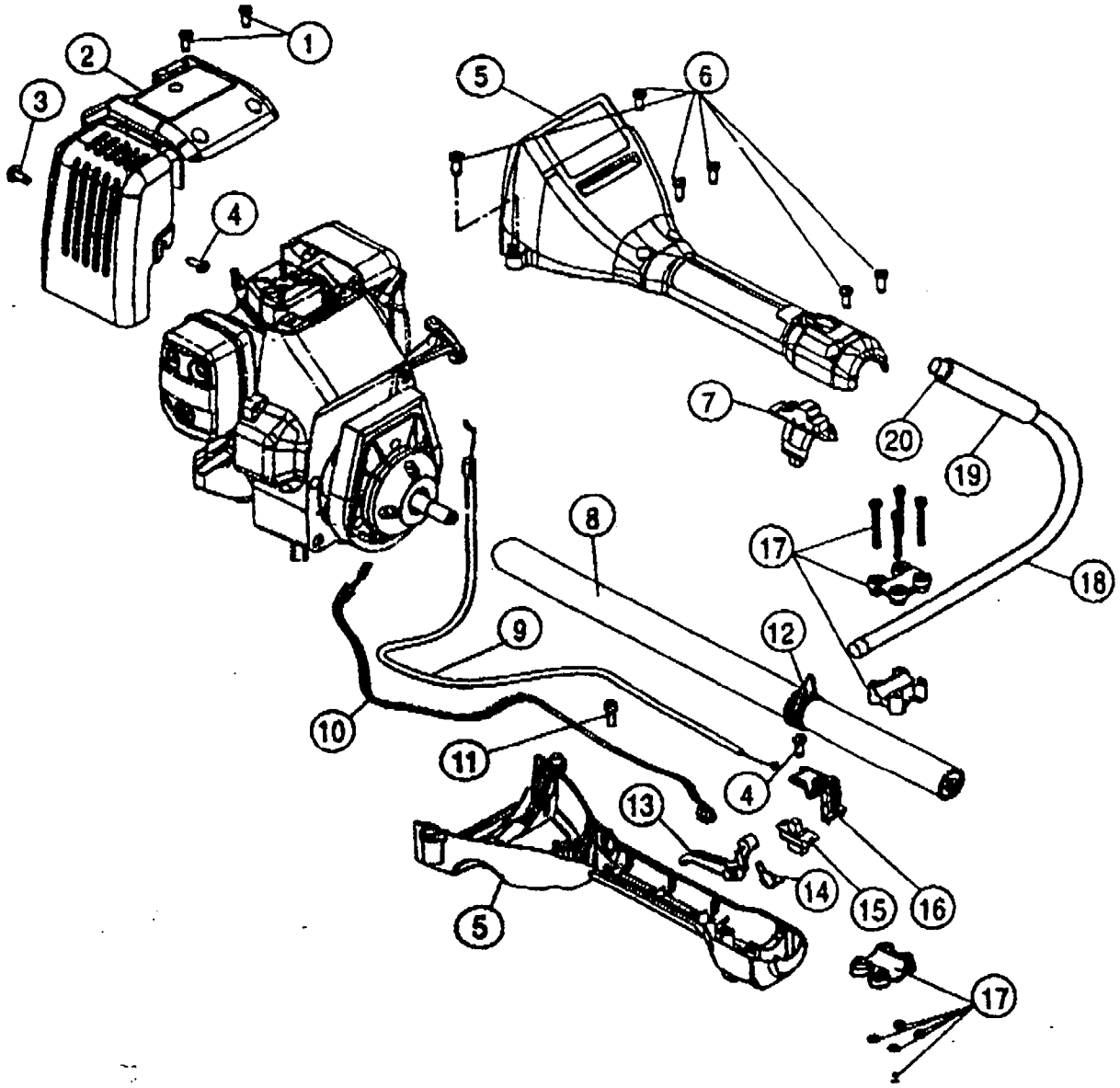

Item	Part No.	Description
1	181020	Screw, M5 X 15.8mm
2	181088	Cover, Engine
3	181089	Screw, M5 X 15.78mm SEMS
4	181104	Screw, Engine Cover
5	181090	Handle, Assembly
6	181070	Screw, M5 X 32mm
7	181091	Slide, Switch
8	181092	Housing, Upper Drive (970r and 990r only)
8	181105	Housing, Upper Drive (960r only)
9	181093	Cable, Throttle
10	181094	Lead, Wire 16" (2 required)
11	181095	Screw, Anti-Rotation
12	610327	Clip, Shoulder Strap
13	181096	Trigger
14	610314	Spring
15	181097	Switch
16	181098	Retainer, Switch & Trigger
17	683295	Handle Bracket Assembly
18	181099	J-Handle Assembly (Items 19 & 20)
19	612831	Grip
20	612021	Tube Closure
*	181103	Decal Kit

* not shown

LOWER BOOM & CUTTING HEAD ASSEMBLY - MODEL 960r

RYOBI AMERICA CORP.

WESTERN REGIONAL OFFICE:
GARDEN PROMENADE
9699 CHAPMAN AVENUE
GARDEN GROVE, CA 92640
TELEPHONE: (714) 539-3170
TELEFAX: (714) 539-3560

CORPORATE OFFICE:
5201 PEARMAN DAIRY ROAD
P.O. BOX 1207
ANDERSON, SC 29622-1207
TELEPHONE: (803) 226-6511
TELEFAX: (803) 261-9435

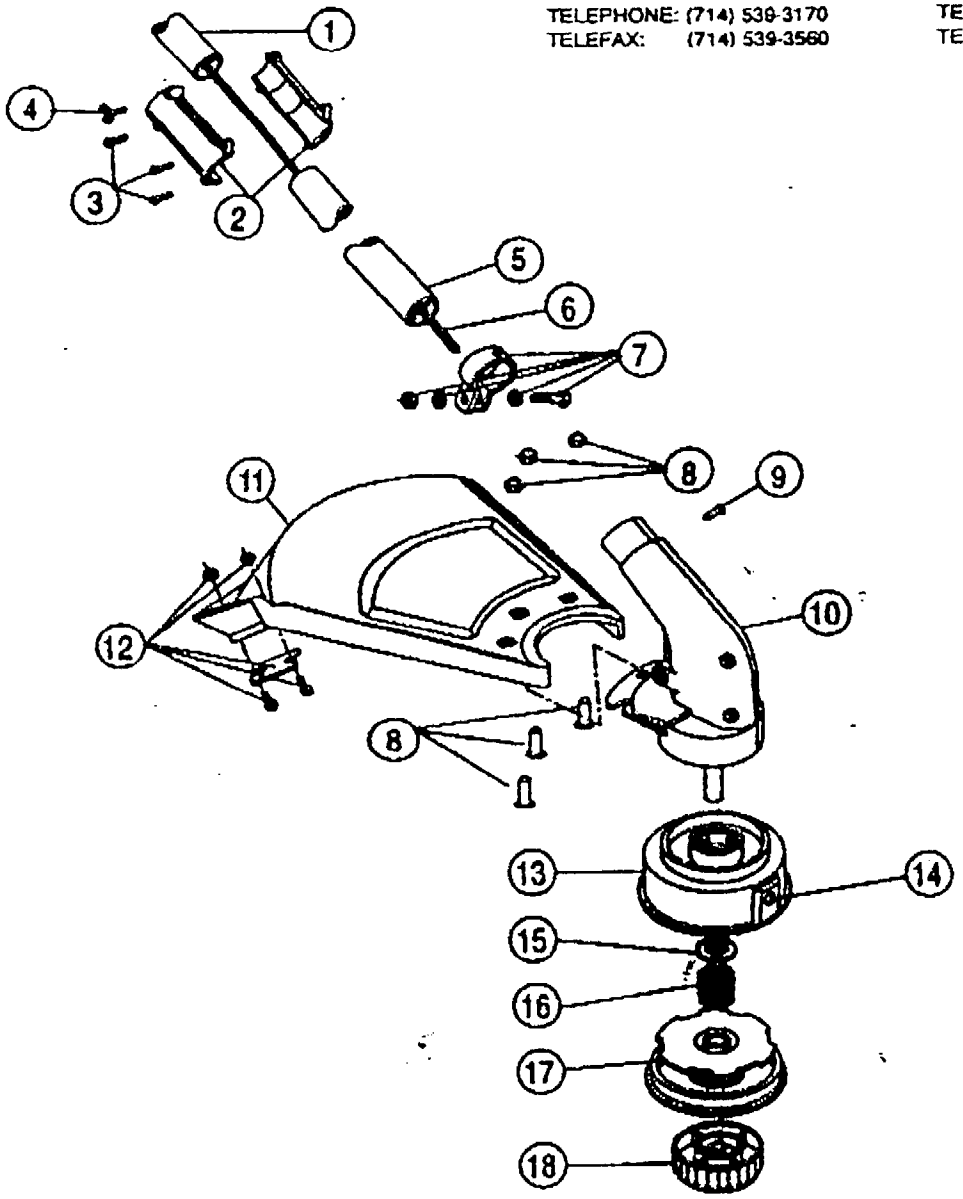

Item	Part No.	Description
1	181106	Housing, Upper Drive
2	153671	Split Boom Coupling Set
3	683074	Screw, Coupling Set
4	147643	Screw, Wing (qty 1)
5	181106	Housing, Lower Drive
6	180406	Shaft, Flexible Drive
7	153597	Clamp Assembly
8	180547	Hardware, Guard Mounting
9	145569	Screw, Anti-Rotation
10	180549	Gearbox
11	180548	Guard, Cutting Head
12	180553	Blade Assembly
13	153619	Spool, Outer W/Eyelet
14	145566	Eyelet
15	610660	Retainer
16	610317	Spring
17	153600	Reel, Inner
18	153066	Bump Head Knob Assembly

Optional Accessories

*	610375	Monoflail Cutting Line (50 ft)
*	153577	Spool and Line (30 ft) Assembly
*	682075	Shoulder Strap Assembly
*	181100	Oil, SAE 30 100ml Bottle
*	181101	Spout, Oil Fill

* not shown

LOWER BOOM & CUTTING HEAD ASSEMBLY - MODEL 970r

(Serial no. 403026296 and greater)

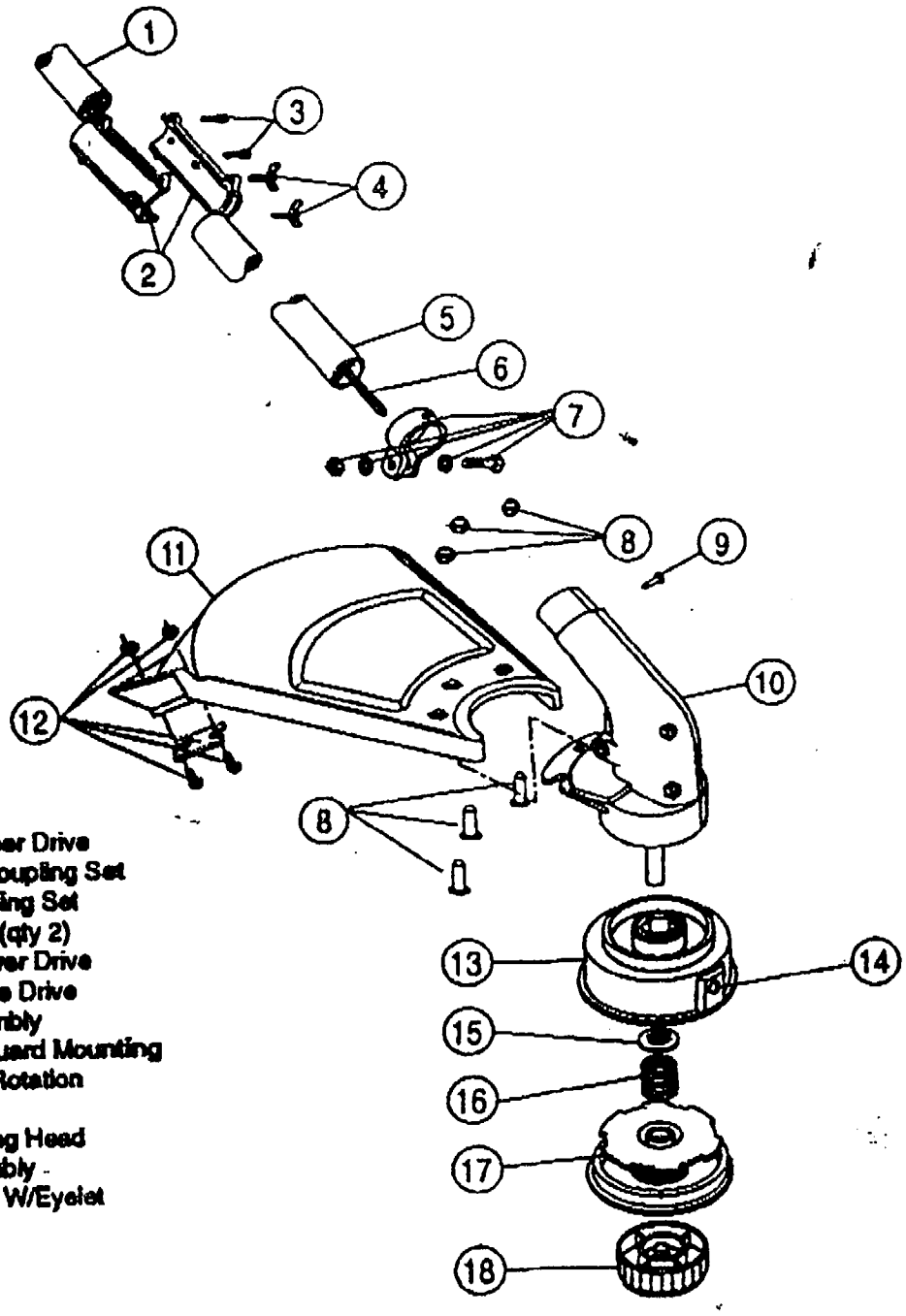

Item	Part No.	Description
1	181092	Housing, Upper Drive
2	683605	Split Boom Coupling Set
3	683606	Screw, Coupling Set
4	683607	Screw, Wing (qty 2)
5	180689	Housing, Lower Drive
6	683608	Shaft, Flexible Drive
7	153597	Clamp Assembly
8	180547	Hardware, Guard Mounting
9	145569	Screw, Anti-Rotation
10	180549	Gearbox
11	180548	Guard, Cutting Head
12	180553	Blade Assembly
13	153619	Spool, Outer W/Eyelet
14	145566	Eyelet
15	610660	Retainer
16	610317	Spring
17	163600	Reel, Inner
18	153066	Bump Head Knob Assembly

Optional Accessories

*	610375	Monofiall Cutting Line (50 ft)
*	153577	Spool and Line (30 ft) Assembly
*	682075	Shoulder Strap Assembly
*	181100	Oil, SAE 30 100ml Bottle
*	181101	Spout, Oil Fill

* not shown

LOWER BOOM & CUTTING HEAD ASSEMBLY - MODEL 990r

RYOBI AMERICA CORP.

WESTERN REGIONAL OFFICE:
GARDEN PROMENADE
9699 CHAPMAN AVENUE
GARDEN GROVE, CA 92840
TELEPHONE: (714) 539-3170
TELEFAX: (714) 539-3560

CORPORATE OFFICE:
5201 PEARMAN DAIRY ROAD
P.O. BOX 1207
ANDERSON, SC 29622-1207
TELEPHONE: (803) 226-6511
TELEFAX: (803) 261-9436

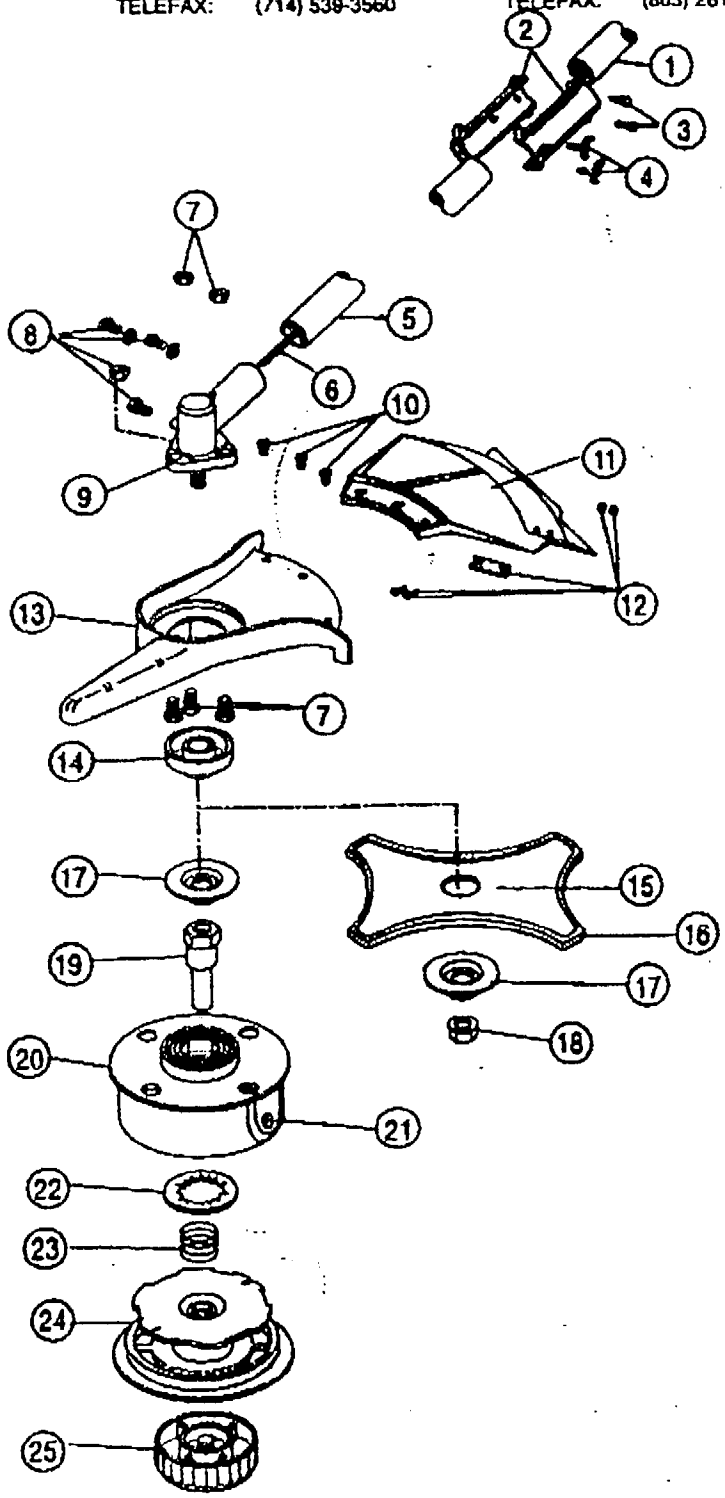

Item	Part No.	Description
1	181092	Housing, Upper Drive
2	683605	Split Boom Coupling Set
3	683606	Screw, Coupling Set
4	683607	Screw, Wing (qty 2)
5	180804	Housing, Lower Drive
6	613300	Shaft, Flexible Drive
7	147539	Hardware, Brush Blade Guard Mounting
8	147677	Mounting Hardware & Grease Plug Assembly
9	147488	Gearbox (items 8, 14, 17 and 18)
10	683304	Screw, Guard Mounting
11	180387	Guard, Cutting Head
12	682061	Blade Assembly
13	147492	Guard Mount
14	147489	Driver
15	145873	Blade, Brush (includes item 16)
16	147670	Cover, Blade
17	147490	Washer, Retainer
18	147491	Nut, Lock
19	612483	Shaft, Spool
20	147494	Spool, Outer W/Eyelet
21	145566	Eyelet
22	612026	Retainer
23	610636	Spring
24	147495	Reel, Inner
25	180814	Bump Head Knob Assembly
*	147299	Locking Rod Tool
*	682075	Shoulder Strap Assembly

Optional Accessories

*	180120	Monoflail Cutting Line (50 ft)
*	147345	Spool and Line Assembly (40 ft)
*	147498	Complete Head Assembly (items 19-25)
*	180014	Blade Retaining Kit (items 17 and 18)
*	181100	Oil, SAE 30 100ml Bottle
	181101	Spout, Oil Fill

* not shown

ENGINE PARTS - RYOBI 720r

RYOBI AMERICA CORP.

WESTERN REGIONAL OFFICE:
GARDEN PROMENADE
9699 CHAPMAN AVENUE
GARDEN GROVE, CA 92640
TELEPHONE: (714) 539-3170
TELEFAX: (714) 539-3560

CORPORATE OFFICE:
5201 PEARMAN DAIRY ROAD
P.O. BOX 1207
ANDERSON, SC 29622-1207
TELEPHONE: (803) 226-6511
TELEFAX: (803) 261-9435

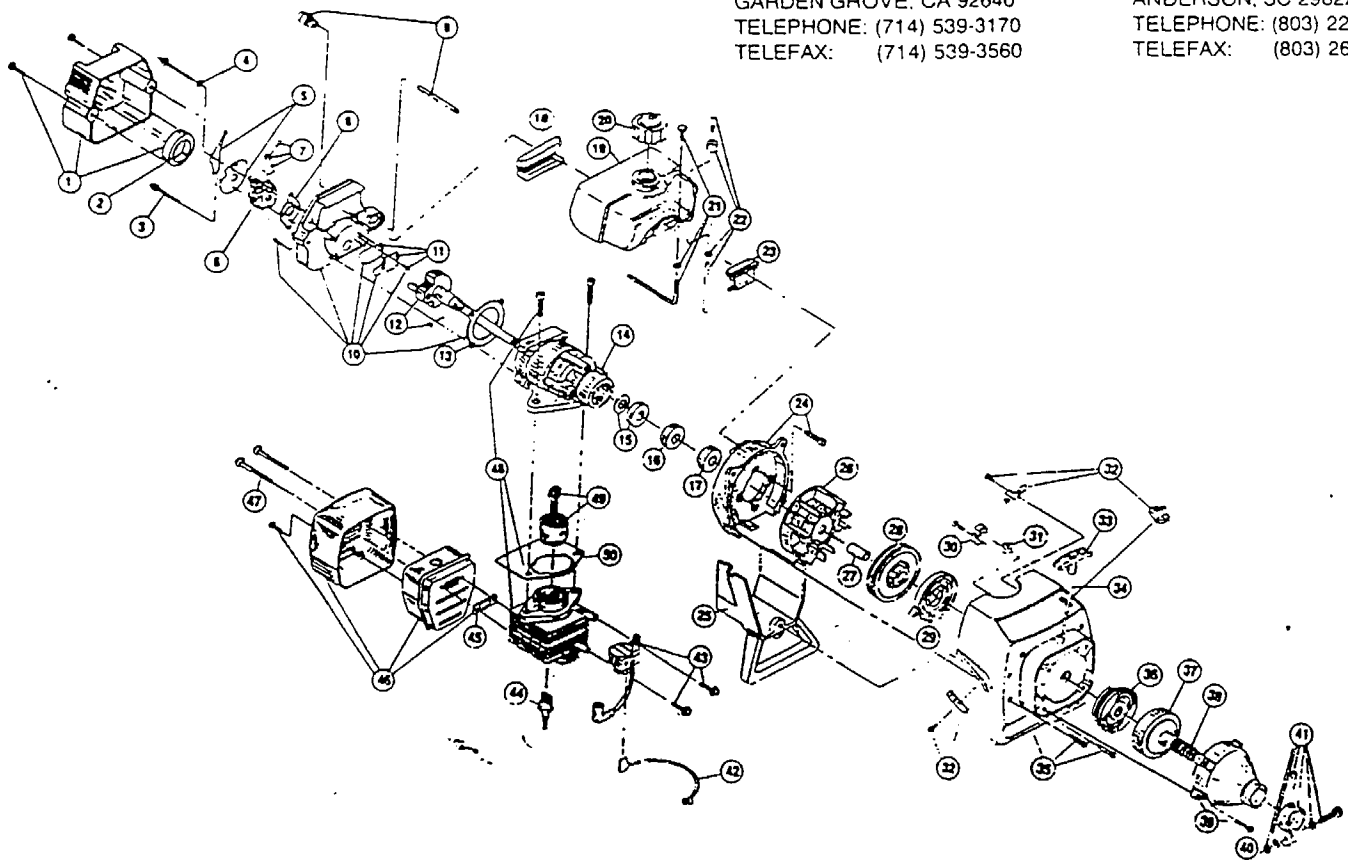

Item	Part No.	Description
1	180349	Carburetor/Air Cleaner Cover Assembly (includes item 2)
2	180350	Air Cleaner Filter
3	180351	Carburetor Mounting Screw Assembly
4	180352	Wavey Washer
5	180353	Choke Lever and Plate
6	147572	Carburetor Assembly
7	682048	Throttle Adjustment Assembly (Walbro)
7	147640	Throttle Adjustment Assembly (Tillotson)
8	610675	Carburetor Gasket (10 pack)
9	683974	Primer and Hose Assembly
10	180354	Carburetor Mount Assembly (includes 11 and 13)
11	147573	Reed Assembly
12	180022	Power Shaft Assembly
13	612115	Carburetor Mount Gasket (10 pack)
14	180026	Crankcase Service Assembly (items 12, 14-17)
15	682041	Inner Bearing Assembly
16	610309	Seal
17	610308	Outer Bearing Assembly
18	612134	Rear Mounting Pad
19	147580	Fuel Tank Assembly (includes items 20-22)
20	180000	Fuel Cap Assembly
21	147290	Return Line Assembly
22	682039	Fuel Line Assembly
23	145308	Front Mounting Pad
24	153520	Shroud Assembly
25	683078	Shroud Extension and Stand
26	153624	Flywheel Assembly
27	145918	Spacer
28	683856	Recoil Pulley Assembly
29	613102	Recoil Spring
30	153644	Pulley Retainer Assembly
31	611061	Rope Guide
32	180035	Switch Assembly
33	610300	Pull Handle
34	613103	Rope
35	180097	Starter Housing Assembly
36	153591	Clutch Rotor Assembly
37	153592	Clutch Drum Assembly
38	612468	Spring
39	683601	Clutch Cover Assembly
40	145888	Clutch Cover Screw Assembly
41	153597	Upper Clamp Assembly
42	180036	Wire Lead
43	683390	Module Assembly
44	610311	Spark Plug
45	610672	Exhaust Gasket (10 pack)
46	180119	Muffler Assembly (includes 46 and 48)
47	147575	Muffler Mounting Bolt Assembly
48	180063	Cylinder Assembly
49	147012	Piston and Rod Assembly
50	145564	Cylinder Gasket (10 pack)
•	180034	Engine Hardware Kit
•	180011	Engine Gasket Kit
•	153308	O.E.M. Carburetor Repair Kit (Walbro)
•	147170	O.E.M. Carburetor Repair Kit (Tillotson)
•	153309	Gasket Diaphragm Repair Kit (Walbro)
•	147171	Gasket Diaphragm Repair Kit (Tillotson)
•	682507	Piston Ring
•	180027	Short Block Assembly (items 12, 14-17, 48-50)
•	610676	Flywheel Key (10 pack)
•	147544	Starter Housing Screw Set

• not shown

The above part numbers are for serial numbers 203096321 and greater.

BOOM & TRIMMER PARTS - RYOBI 720r

RYOBI AMERICA CORP.

WESTERN REGIONAL OFFICE:
GARDEN PROMENADE
9699 CHAPMAN AVENUE
GARDEN GROVE, CA 92640
TELEPHONE: (714) 539-3170
TELEFAX: (714) 539-3560

CORPORATE OFFICE:
5201 PEARMAN DAIRY ROAD
P.O. BOX 1207
ANDERSON, SC 29622-1207
TELEPHONE: (803) 226-6511
TELEFAX: (803) 261-9435

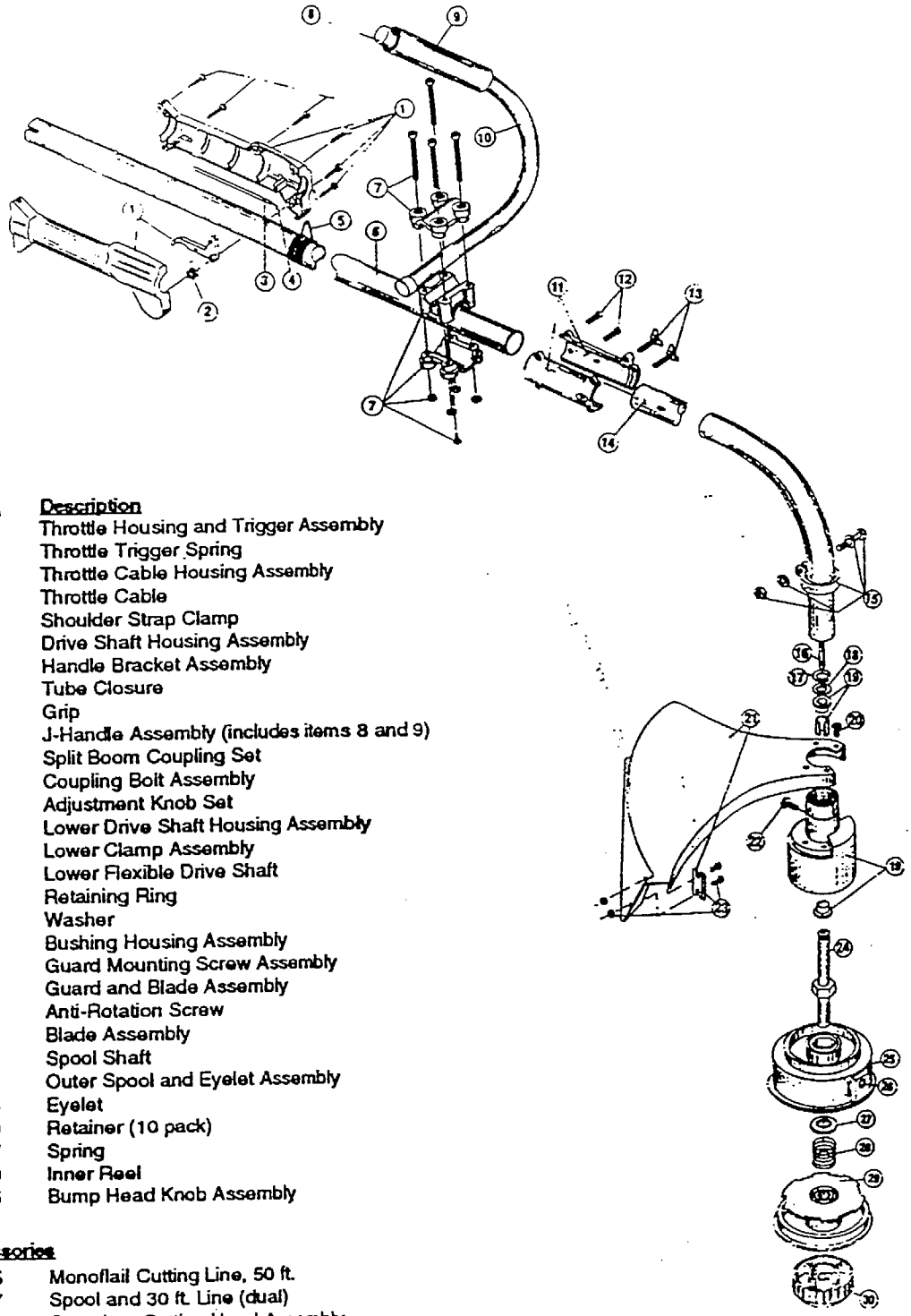

Item	Part No.	Description
1	180277	Throttle Housing and Trigger Assembly
2	610314	Throttle Trigger Spring
3	180021	Throttle Cable Housing Assembly
4	180127	Throttle Cable
5	610327	Shoulder Strap Clamp
6	683603	Drive Shaft Housing Assembly
7	683295	Handle Bracket Assembly
8	612021	Tube Closure
9	612831	Grip
10	683815	J-Handle Assembly (includes items 8 and 9)
11	683605	Split Boom Coupling Set
12	683606	Coupling Bolt Assembly
13	683607	Adjustment Knob Set
14	683604	Lower Drive Shaft Housing Assembly
15	153597	Lower Clamp Assembly
16	683608	Lower Flexible Drive Shaft
17	145570	Retaining Ring
18	145567	Washer
19	153312	Bushing Housing Assembly
20	153318	Guard Mounting Screw Assembly
21	683274	Guard and Blade Assembly
22	145569	Anti-Rotation Screw
23	682061	Blade Assembly
24	153313	Spool Shaft
25	153619	Outer Spool and Eyelet Assembly
26	145566	Eyelet
27	610660	Retainer (10 pack)
28	610317	Spring
29	153600	Inner Reel
30	153066	Bump Head Knob Assembly

Optional Accessories

*	610375	Monoflail Cutting Line, 50 ft.
*	153577	Spool and 30 ft. Line (dual)
*	147823	Complete Cutting Head Assembly (includes items 15, 17-30)
*	682075	Shoulder Strap Assembly
*	147541	IDC or Ryobi 2-Cycle Oil (4. oz. can)

* not shown

APPENDIX C: RELEVANT SURVEY DOCUMENTS

Engine, Fuel, and Emissions Engineering, Incorporated

9812 Old Winery Place, Suite 22 ph. (916) 368-4770
Sacramento, CA 95827-1732 USA fax (916) 362-2579

November 14, 1996

AAA Tree Service
2320 Wyda way
Sacramento CA 95825

Subject: Usage Survey of Small Engine Equipment

Dear Mr. Cleet Little:

As per your phone conversation with Richard Cernansky, we have enclosed a survey form for you to complete. Thank you for participating in our usage survey of small engine equipment. This survey will give us valuable information to help the California Air Resources Board in determining future regulatory actions on small engine emissions. Information received from this form will be used to determine general equipment usage only. Your participation in this survey will in no way directly affect your place of business. Please complete this form and return it to us as soon as possible. You may use the return envelope or fax us at 916/362-2759.

Please feel free to call myself or Richard at 916/368-4770 if you have any questions about the survey or the survey form.

Best Regards,

Christopher S. Weaver, P.E.
President

Usage Survey of Handheld Equipment

Institution/Company : AAA Tree Service
Department : _____
Contact Person : Cleet Little
Street Address : 2320 Wyda way
City, State, Zip : Sacramento CA 95825
Phone : 916/925-0328
FAX : _____

Chainsaw

	Make	Model	Engine size (cc)*	Age of Unit	Usage Hours Weekly	Usage Hours Annually	How often is equipment replaced?
1							
2							
3							
4							
5							
6							
7							
8							
9							
10							

Brushcutter

	Make	Model	Engine size (cc)**	Age of Unit	Usage Hours Weekly	Usage Hours Annually	How often is equipment replaced?
1							
2							
3							
4							
5							
6							
7							
8							
9							
10							

Clearing Saw

	Make	Model	Engine size (cc)**	Age of Unit	Usage Hours Weekly	Usage Hours Annually	How often is equipment replaced?
1							
2							
3							
4							
5							
6							
7							
8							
9							
10							

* - The engine size may be specified as smaller or larger than 45 cc if the exact engine size is not known.

** - The engine size may be specified as smaller or larger than 40 cc if the exact engine size is not known.

Sacramento Listings of Companies / Institutions Contacted to Participate in Survey

Willing to Participate:

Sacramento County Department of Regional Parks, Recreation & Open Spaces
George Quinday
4040 Bradshaw rd.
Sacramento CA 95827
916/366-2061

City of Sacramento Tree Services
Martin Fitch
5730 24th st.
Sacramento CA 95822
916/433-6345

City of Sacramento Parks - Maintenance
Ray Flores
1231 I st., room 400
Sacramento CA 95814
916/433-6336

Props & Company
Rodney Props
P.O. Box 856
Carmichael CA 95609
916/485-7246

AAA Tree Service
Cleet Little
2320 Wyda way
Sacramento CA 95825
916/925-0328

West Coast Tree Service
P.O. Box 276209
Sacramento CA 95827
916/381-3922

Sacramento Municipal Utility District - Tree Service
Anita Turner
916/732-5856
FAX : 916/732-6790
* - please fax copy of survey

Los Angeles Listings of Companies / Institutions Contacted to Participate in Survey

Willing to Participate:

City of Los Angeles
Street Maintenance - Street Tree
200 N. Main st., room 1545
Los Angeles CA 90012
213/485-5661

City of Los Angeles
Griffith Park Maintenance
Kevin Regan, Forestry Division
213/485-4826
FAX: 818/247-4740
* - please fax copy of survey

Precision Tree Service Inc.
8340 Eton ave.
Canoga Park CA 91304
213/257-5747

Shivers Bros.
121 W. El Segundo blvd.
Los Angeles CA 90061
213/755-9338

State of California
Kenneth Hahn State Recreation Area
Harry
4100 S. La Cienega blvd.
Los Angeles CA 90056
213/291-0199

John Kapua Tree Service
2333 N. Keystone
Burbank CA 91506
213/461-1541

Aspen Tree
818/398-3513
FAX : 909/672-0013
* - please fax copy of survey

Usage Survey of Handheld Equipment

Institution/Company : Props & Company
Department : TREE/LAWN
Contact Person : Rodney Props
Street Address : P.O. Box 856
City, State, Zip : Carmichael CA 95609
Phone : 916/485-7246
FAX : _____

Chainsaw

	Make	Model	Engine size (cc)*	Age of Unit	Usage Hours Weekly	Usage Hours Annually	How often is equipment replaced?
1	STIHL	036	SMAX	1 yr	20		48 mth
2	"	"	"	" "	"		" "
3	Craftman	2.2	"	3 yr	20		48 "
4	"	"	"	"	"		" "
5	Poulan	"	"	2 yr	"		" "
6	"	"	"	"	"		" "
7							
8							
9							
10							

Brushcutter

	Make	Model	Engine size (cc)**	Age of Unit	Usage Hours Weekly	Usage Hours Annually	How often is equipment replaced?
1	12"	Asph.	6 cyl.	3 yr	15		Maint/Rebuilt
2	9"	Bandit	4 cyl	8 yr	15		" " " "
3							
4							
5							
6							
7							
8							
9							
10							

Clearing Saw

	Make	Model	Engine size (cc)**	Age of Unit	Usage Hours Weekly	Usage Hours Annually	How often is equipment replaced?
1							
2							
3							
4							
5							
6							
7							
8							
9							
10							

* - The engine size may be specified as smaller or larger than 45 cc if the exact engine size is not known.

** - The engine size may be specified as smaller or larger than 40 cc if the exact engine size is not known.

Usage Survey of Handheld Equipment

Institution/Company : City of Sacramento
Department : Tree Services
Contact Person : Martin Fiton
Street Address : 5730 24th st.
City, State, Zip : Sacramento CA 95822
Phone : 916/433-6345
FAX : _____

Chainsaw

	Make	Model	Engine size (cc)*	Age of Unit	Usage Hours Weekly	Usage Hours Annually	How often is equipment replaced?
1	Husqvarna	257	57	1 yr.	25	1300	annually
2	"						
3	"						
4	"						
5	"						
6	"						
7	"						
8	"	257	57	1 yr	25	1300	annually
9	Echo	CS 3000	18	1 yr	20	1040	annually
10	"	CS 3000	18	1 yr	20	1040	"

Chainsaw ~~Brushcutter~~

	Make	Model	Engine size (cc)**	Age of Unit	Usage Hours Weekly	Usage Hours Annually	How often is equipment replaced?
1	"	CS 3000	18	1 yr	20	1040	annually
2	"	"	"	"			
3	"	"	"	"			
4	"	CS 3000	18	1 yr	20	1040	annually
5	Husqvarna	288	54	2 yr	7	326	3 yr.
6	"	"	"	"	"	"	"
7	Husqvarna	41	24	1 yr	15	780	annually
8	"	"	"	"	"	"	"
9	"	"	"	"	"	"	"
10	Husqvarna	41	24	1 yr	5	260	2 yr

Chain ~~Blowing~~ Saw

	Make	Model	Engine size (cc)**	Age of Unit	Usage Hours Weekly	Usage Hours Annually	How often is equipment replaced?
1	Husqvarna	41	24	1 yr	5	260	2 yr
2	"	"	"	"	"	"	"
3	"	"	"	"	"	"	"
4	Homelite	750	68	6 yr	5	260	6 yr
5	Homelite	750	68	6 yr.	5	260	6 yr.
6	Homelite	1050	60	6 yr	3	156	8 yr
7	Stihl	070	83	8 yr.	5	260	?
8							
9	Echo	CS 3000	18	1 yr	20	1040	1 yr
10	"	"	18	1 yr	20	1040	1 yr.

* - The engine size may be specified as smaller or larger than 45 cc if the exact engine size is not known.

** - The engine size may be specified as smaller or larger than 40 cc if the exact engine size is not known.

Usage Survey of Handheld Equipment

Institution/Company : County of Sacramento
Department : Regional Parks, Recreation & Open Spaces
Contact Person : George Quinday
Street Address : 4040 Bradshaw rd.
City, State, Zip : Sacramento CA 95827
Phone : 916/366-2061
FAX : 855-5932

Chainsaw

	Make	Model	Engine size (cc)*	Age of Unit	Usage Hours Weekly	Usage Hours Annually	How often is equipment replaced?
1	ECHO		33.4	3 year		100	5 yrs
2	STIHL		41.3	1 yr		50	
3	STIHL		54.1	1 yr		50	
4	STIHL		44.3	1 yr		75	
5	STIHL		36.6	1 yr		100	
6	HUSKY		55	4 yr		100	
7							
8							
9							
10							

Brushcutter

	Make	Model	Engine size (cc)**	Age of Unit	Usage Hours Weekly	Usage Hours Annually	How often is equipment replaced?
1							
2							
3							
4							
5							
6							
7							
8							
9							
10							

NA

Clearing Saw

	Make	Model	Engine size (cc)**	Age of Unit	Usage Hours Weekly	Usage Hours Annually	How often is equipment replaced?
1							
2							
3							
4							
5							
6							
7							
8							
9							
10							

NA

* - The engine size may be specified as smaller or larger than 45 cc if the exact engine size is not known.

size may be specified as smaller or larger than 40 cc if the e size is not known.

Post-It® Fax Note 7671	Date 12/13	# of pages ▶ 1
To Lit CHAN	From G. Quinday	
Co./Dept.	Co. Sac County	
Phone # 368 4788	Phone # 366-2671	
Fax # 362-2579	Fax # 855-5932	

Usage Survey of Handheld Equipment

Institution/Company Sacramento Municipal Utility District
Department Tree Service
Contact Person . Anita Turner
Street Address : 1708 59th ST
City, State, Zip : Sac CA 95819
Phone . 916/732-5856
FAX : 916/732-6790

Chainsaw

	Make	Model	Engine size (cc)*	Age of Unit	Usage Hours Weekly	Usage Hours Annually	How often is equipment replaced?
1	Echo	3000		48 hrs	30		usually 2
2	Stihl	064		saws	used daily		years
3	Husky	394xp			30		
4	"	272xp			✓ 9		
5					" 9		
6							
7							
8							
9							
10							

Brushcutter

	Make	Model	Engine size (cc)**	Age of Unit	Usage Hours Weekly	Usage Hours Annually	How often is equipment replaced?
1							
2							
3							
4							
5							
6							
7							
8							
9							
10							

Clearing Saw

	Make	Model	Engine size (cc)**	Age of Unit	Usage Hours Weekly	Usage Hours Annually	How often is equipment replaced?
1							
2							
3							
4							
5							
6							
7							
8							
9							
10							

* - The engine size may be specified as smaller or larger than 45 cc if the exact engine size is not known.

** - The engine size may be specified as smaller or larger than 40 cc if the exact engine size is not known.

Usage Survey of Handheld Equipment

Institution/Company Shivers Bros.
Department
Contact Person Paul N. Shivers
Street Address 121 W. El Segundo blvd.
City, State Zip Los Angeles CA 90061
Phone 213/755-9338
FAX

Chainsaw

	Make	Model	Engine size (cc)*	Age of Unit	Usage Hours Weekly	Usage Hours Annually	How often is equipment replaced?
1	Echo	CS 3000	< 45cc	1 year	9	468	Yearly
2	Echo	CS 3000	< 45cc	1 yr	5	225	Yearly
3	McCulloch	2014	< 45cc	1 yr	5	225	Yearly
4	Poulan	3800	3.7 CI	1 yr	5	225	2 yrs
5	Poulan	3800	3.7 CI	1 yr	2	80	2 yrs
6	Poulan	—	5.0 CI	5 yr	1/2	20	10 yrs
7							
8							
9							
10							

Brushcutter

	Make	Model	Engine size (cc)**	Age of Unit	Usage Hours Weekly	Usage Hours Annually	How often is equipment replaced?
1							
2							
3							
4							
5							
6							
7							
8							
9							
10							

Clearing Saw

	Make	Model	Engine size (cc)**	Age of Unit	Usage Hours Weekly	Usage Hours Annually	How often is equipment replaced?
1							
2							
3							
4							
5							
6							
7							
8							
9							
10							

* - The engine size may be specified as smaller or larger than 45 cc if the exact engine size is not known.

** - The engine size may be specified as smaller or larger than 40 cc if the exact engine size is not known.

Usage Survey of Handheld Equipment

Institution/Company : City of Los Angeles
Department : Street Maintenance - Street Tr
Contact Person : Oscar Suquett
Street Address : 200 N. Main st., room 1545
City, State, Zip : Los Angeles CA 90012
Phone : 213/485-5661
FAX :

Post-it® Fax Note 7671	Date 12-19-96	# of pages ▶
To LeT Chan	From George Ganzalez	
Co./Dept.	Co.	
Phone # 916-368-4778	Phone # 213-485-5675	
Fax # 916-362-2579	Fax # 213-237-0158	

Chainsaw

		Make	Model	Engine size (cc)*	Age of Unit	Usage Hours Weekly	Usage Hours Annually	How often is equipment replaced?
19	1	Homelite	Super 2	1.9	10 yrs	20.0	520	Every 10 years
27	2	Homelite	Super E2	2.1	10 yrs	20.0	520	
12	3	Homelite	Super XL	3.3	10 yrs	10.0	260	
3	4	Homelite	1050	4.7	10 yrs	5.0	130	
24	5	Echo	330	2.04	9 yrs	15.0	390	
6	6	Echo	510	3.045	9 yrs	5.0	130	
5	7	Echo	8000	4.93	9 yrs	5.0	130	
5	8	Stihl	011	2.49	6 yrs	20.0	520	
14	9	Stihl	012	2.49	5 yrs	20.0	520	
19	10	Stihl	026	2.97	5 yrs	20.0	520	

Brushcutter

		Make	Model	Engine size (cc)**	Age of Unit	Usage Hours Weekly	Usage Hours Annually	How often is equipment replaced?
6	1	Stihl	034	3.75	5 yrs	10.0	260	Every 10 years
3	2	Stihl	064	5.16	5 yrs	5.0	130	
7	3	Stihl	084	7.94	5 yrs	5.0	130	
16	4	Poulan	S23DA	2.3	1 yrs	20.0	260	
	5							
156	6							
	7							
	8							
	9							
	10							

Clearing Saw

	Make	Model	Engine size (cc)**	Age of Unit	Usage Hours Weekly	Usage Hours Annually	How often is equipment replaced?
1							
2							
3							
4							
5							
6							
7							
8							
9							
10							

* - The engine size may be specified as smaller or larger than 45 cc if th exact engine size is not known.

** - The engine size may be specified as smaller or larger than 40 cc if th exact engine size is not known.

Usage Survey of Handheld Equipment

Institution/Company : City of Los Angeles
Department : Griffith Park Maintenance
Contact Person : Kevin Regan, Forestry Division
Street Address : 3900 WEST CHEVY CHASE DR
City, State, Zip : LOS ANGELES CALIF 90039
Phone : 213/485-4826
FAX : 818/247-4740

Chainsaw

	Make	Model	Engine size (cc)*	Age of Unit	Usage Hours Weekly	Usage Hours Annually	How often is equipment replaced?
1	STIHL	020	35.2	6 MO	20	1040	EVERY YEAR
2	STIHL	026	43.7	6 MO	15	780	" "
3	STIHL	034	56.5	6 MO	3	156	" "
4	STIHL	038	72.2	6 MO	3	156	" "
5	STIHL	044	70.7	6 MO	4	208	" "
6	STIHL	064	84.9	6 MO	2	104	" "
7	STIHL	066	91.6	6 MO	2	104	" "
8	STIHL	084	121.6	6 MO	2	104	" "
9							"
10							

Brushcutter

	Make	Model	Engine size (cc)**	Age of Unit	Usage Hours Weekly	Usage Hours Annually	How often is equipment replaced?
1							
2							
3							
4							
5							
6							
7							
8							
9							
10							

Clearing Saw

	Make	Model	Engine size (cc)**	Age of Unit	Usage Hours Weekly	Usage Hours Annually	How often is equipment replaced?
1							
2							
3							
4							
5							
6							
7							
8							
9							
10							

* - The engine size may be specified as smaller or larger than 45 cc if the exact engine size is not known.

** - The engine size may be specified as smaller or larger than 40 cc if the exact engine size is not known.

Usage Survey of Handheld Equipment

Date: 12/28/96

Institution/Company : County of Sacramento
Department : Regional Parks, Recreation & Open Spaces
Contact Person : George Quinday
Street Address : 4040 Bradshaw rd.
City, State, Zip : Sacramento CA 95827
Phone : 916/366-2061
FAX : _____

Chainsaw

	Make	Model	Engine size (cc)	Age of Unit	Usage Hours Weekly	Usage Hours Annually	How often is equipment replaced?
1	ECHO	CS330EVL	33.4	3		100	rebuild engine/replace equipment every five years
1	STIHL	036	61.3	1		50	rebuild engine/replace equipment every five years
1	STIHL	029	54.1	1		50	rebuild engine/replace equipment every five years
1	STIHL	025	44.3	1		75	rebuild engine/replace equipment every five years
1	STIHL	009EQ	36.6	1		100	rebuild engine/replace equipment every five years
1	HUSQVARNA	35	34	4		100	rebuild engine/replace equipment every five years

Information has been verified and updated based on phone conversation after receiving the responses.

Usage Survey of Handheld Equipment

Date: 12/28/96

Institution/Company : City of Sacramento
Department : Tree Services
Contact Person : Martin Fitch
Street Address : 5730 24th st.
City, State, Zip : Sacramento CA 95822
Phone : 916/433-6345
FAX : _____

Chainsaw

	Make	Model	Engine size (cc)	Age of Unit	Usage Hours Weekly	Usage Hours Annually	How often is equipment replaced?
8	HUSQVARNA	257	57	1	25	1300	rebuild engine/replace equipment every year
8	ECHO	CS3000	30.1	1	20	1040	rebuild engine/replace equipment every year
2	HUSQVARNA	288	88	2	7	364	rebuild engine/replace equipment every two years
3	HUSQVARNA	41	40	1	15	780	rebuild engine/replace equipment every year
4	HUSQVARNA	41	40	1	5	260	rebuild engine/replace equipment every two years
2	HOMELITE	750	68	6	5	260	rebuild engine every two years; replace equipment after six year
1	HOMELITE	1050	100	6	3	156	rebuild engine every two years; replace equipment after six year
1	STIHL	090	83	8	5	260	rebuild engine every two years; replace equipment after eight year

Information has been verified and updated based on phone conversation after receiving the responses.

Usage Survey of Handheld Equipment

Date: 12/28/96

Institution/Company : Props & Company
Department : Tree/Lawn
Contact Person : Rodney Props
Street Address : P.O. Box 856
City, State, Zip : Carmichael CA 95609
Phone : 916/485-7246
FAX : _____

Chainsaw

	Make	Model	Engine size (cc)	Age of Unit	Usage Hours Weekly	Usage Hours Annually	How often is equipment replaced?
2	STIHL	036	61.5	1	20	1040	rebuild engine every year; replace equipment after four years
2	CRAFTMAN		36	3	20	1040	rebuild engine every year; replace equipment after four years
2	POULAN	655	98	2	20	1040	rebuild engine every year; replace equipment after four years

Information has been verified and updated based on phone conversation after receiving the responses.

Usage Survey of Handheld Equipment

Date: 12/28/96

Institution/Company : City of Los Angeles
Department : Street Maintenance - Street Tree
Contact Person : OSCAR SUQUETT/GEORGE GONZALEZ
Street Address : 200 N. Main st., room 1545
City, State, Zip : Los Angeles CA 90012
Phone : 213/485-5661
FAX : _____

Chainsaw	Make	Model	Engine size (cc)*	Age of Unit	Usage Hours Weekly	Usage Hours Annually	How often is equipment replaced?
19	HOMELITE	SUPER 2	32	10		520	rebuild engine every year; replace equipment after ten years
27	HOMELITE	SUPER EZ	36	10		520	rebuild engine every year; replace equipment after ten years
12	HOMELITE	SUPER XL	54	10		260	rebuild engine every two years; replace equipment after ten years
3	HOMELITE	1050	100	10		130	rebuild engine every two years; replace equipment after ten years
24	ECHO	330	33	9		390	rebuild engine every year; replace equipment after ten years
6	ECHO	510	51	9		130	rebuild engine every two years; replace equipment after ten years
5	ECHO	8000	81	9		130	rebuild engine every two years; replace equipment after ten years
5	STIHL	011	41	6		520	rebuild engine every year; replace equipment after ten years
4	STIHL	012	41	5		520	rebuild engine every year; replace equipment after ten years
19	STIHL	026	49	5		520	rebuild engine every year; replace equipment after ten years
6	STIHL	034	57	5		260	rebuild engine every two years; replace equipment after ten years
3	STIHL	064	85	5		130	rebuild engine every two years; replace equipment after ten years
7	STIHL	084	127	5		130	rebuild engine every two years; replace equipment after ten years
16	POULAN	S230A	38	1		260	rebuild engine every two years; replace equipment after ten years

Information has been verified and updated based on phone conversation after receiving the responses.

Usage Survey of Handheld Equipment

Date: 12/28/96

Institution/Company : Shivers Bros.
Department : _____
Contact Person : PUAL SHIVERS
Street Address : 121 W. El Segundo blvd.
City, State, Zip : Los Angeles CA 90061
Phone : 213/755-9338
FAX : _____

Chainsaw	Make	Model	Engine size (cc)*	Age of Unit	Usage Hours Weekly	Usage Hours Annually	How often is equipment replaced?
1	ECHO	CS3000	30.1	1	9	405	rebuild engine/replace equipment every year
1	ECHO	CS3000	30.1	1	5	225	rebuild engine/replace equipment every year
1	McCULLOH	2014	40	1	5	225	rebuild engine/replace equipment every year
1	POULAN	375	61	1	5	225	rebuild engine/replace equipment every two years
1	POULAN	375	61	1	2	80	rebuild engine/replace equipment every two years
1	POULAN	525	82	5	0.5	20	rebuild engine/replace equipment every ten years

Information has been verified and updated based on phone conversation after receiving the responses.

Usage Survey of Handheld Equipment

Date: 12/28/96

Institution/Company : Sacramento Municipal Utility District
Department : Tree Service
Contact Person : Anita Turner
Street Address : 1708 59TH STREET
City, State, Zip : SACRAMENTO CA 95819
Phone : 916/732-5856
FAX : 916/732-6790

Chainsaw	Make	Model	Engine size (cc)	Age of Unit	Usage Hours Weekly	Usage Hours Annually	How often is equipment replaced?
12	ECHO	CS3000	30.1	N/A	30		rebuild engine every year; replace equipment every two years
36	STIHL	064	84.9	N/A	30		rebuild engine every year; replace equipment every two years
1	HUSQVARNA	394XP	94	N/A	9		rebuild engine every year; replace equipment every two years
1	HUSQVARNA	272XP	72	N/A	9		rebuild engine every year; replace equipment every two years

Information has been verified and updated based on phone conversation after receiving the responses.

Usage Survey of Handheld Equipment

Date: 12/28/96

Institution/Company : City of Los Angeles
Department : Griffith Park Maintenance
Contact Person : Kevin Regan, Forestry Division
Street Address : 3900 WEST CHEVY CHASE DRIVE
City, State, Zip : LOS ANGELES CA 90039
Phone : 213/485-4826
FAX : 818/247-4740

Chainsaw

	Make	Model	Engine size (cc)*	Age of Unit	Usage Hours Weekly	Usage Hours Annually	How often is equipment replaced?
1	STIHL	020	35.2	0.5	20	1040	rebuild engine/replace equipment every year
1	STIHL	026	48.7	0.5	15	780	rebuild engine/replace equipment every year
1	STIHL	034	56.5	0.5	3	156	rebuild engine/replace equipment every year
1	STIHL	038	72.2	0.5	3	156	rebuild engine/replace equipment every year
1	STIHL	044	70.7	0.5	4	208	rebuild engine/replace equipment every year
1	STIHL	064	84.9	0.5	2	104	rebuild engine/replace equipment every year
1	STIHL	066	91.6	0.5	2	104	rebuild engine/replace equipment every year
1	STIHL	084	121.6	0.5	2	104	rebuild engine/replace equipment every year

Information has been verified and updated based on phone conversation after receiving the responses.

APPENDIX D: RELEVANT FOCUS GROUP STUDY DOCUMENTS

Group 2	Sacramento	8:00	Tuesday	March 25
Group 3	Sacramento	6:00	Wednesday	March 26

RESIDENTIAL 2-CYCLE
SCREENING QUESTIONNAIRE
RJR 97-368

RESPONDENT'S NAME: _____

ADDRESS: _____

CITY: _____ STATE: _____ ZIP: _____

HOME #: _____ WORK #: _____

RECRUITER: _____ DATE: _____ CONF: _____

(ASK FOR MALE HEAD OF HOUSE)

Hello, I am _____ from _____. We are doing a short survey today and I'd like to ask you just a few questions.

First of all...

1. We are interested in talking to people who have a variety of backgrounds. Do you, any members of your household or any relatives living in the area work... **(READ LIST AND CHECK AS MANY AS MENTIONED)**

[ ] in the landscaping business
[ ] in marketing research
[ ] in advertising
[ ] in environmental engineering
[ ] for the Air Resources Board
(IF ANY CHECKED, THANK AND TERMINATE)
[ ] none

2. Do you yourself take care of your yard at home?

[ ] Yes
[ ] No **(THANK AND TERMINATE)**

3. Do you own any gas-powered, hand held gardening equipment?

[ ] Yes
[ ] No **(THANK AND TERMINATE)**

4. What type of these gas powered, hand held tools do you have? **(READ LIST. CHECK AS MANY AS APPLY IN BELOW GRID)** What others do you have that I have not mentioned? **(WRITE IN GRID BELOW)**

5. How many **(Q4 RESPONSE)** do you have? **(RECORD IN GRID BELOW AND REPEAT FOR EACH TYPE MENTIONED IN Q4)**

6. Did you personally buy the **(Q4 RESPONSE)**? **(RECORD IN BELOW GRID AND REPEAT FOR EACH TYPE MENTIONED IN Q4)**

	Q4 OWN	Q5 # OWNED	Q6 PURCHASED YES	Q6 PURCHASED NO
Weed Wacker/Trimmer	[ ]	____	[ ]	[ ]
Leaf Blower	[ ]	____	[ ]	[ ]
Chain Saw	[ ]	____	[ ]	[ ]
Hedge Trimmer	[ ]	____	[ ]	[ ]
Other **(SPECIFY)**				
_____	[ ]	____	[ ]	[ ]
_____	[ ]	____	[ ]	[ ]

(RECRUIT PER GROUP: 5 WHO OWN 1 PIECE OF EQUIPMENT AND 5 WHO OWN 2 OR MORE)

(IF ALL NO - THANK AND TERMINATE)

7. When in season, do you personally use this equipment at least once a month?

[ ] Yes
[ ] No **(THANK AND TERMINATE)**

8. Do you plan to replace your **(Q4 RESPONSE)** or purchase any other gas-powered, tools in the next year or so?

[ ] Yes
[ ] No

9. Into which of the following ranges does your age fall? **(READ LIST)**

[ ] Under 18 **(THANK AND TERMINATE)**

[ ] 18-29
[ ] 30-39 **(OBTAIN A GOOD MIX)**
[ ] 40-49
[ ] 50-59
[ ] 60-69

[ ] Over 70 **(THANK AND TERMINATE)**

10. Which of the following categories best describes your total household income before taxes? **(READ LIST)**

[ ] Under $20,000
[ ] $20,000 - $40,000
[ ] $40,000 - $60,000 **(OBTAIN A GOOD MIX)**
[ ] $60,000 - $80,000
[ ] Over $80,000

11. What is your favorite hobby? Why is **(RESPONDENT'S HOBBY)** one of your favorite hobbies?

(PLEASE LISTEN TO RESPONDENT. DO NOT RECORD RESPONSE. THANK AND TERMINATE THOSE RESPONDENTS WHO DO NOT SOUND ENTHUSIASTIC AND WHO ARE NOT EASY TO UNDERSTAND. IT IS VERY IMPORTANT THAT YOU ONLY RECRUIT PEOPLE WHO WILL BE ABLE TO CLEARLY EXPRESS THEMSELVES IN A GROUP ENVIRONMENT)

12. Have you ever participated in a focus group discussion? **(EXPLAIN IF NECESSARY)**

[ ] Yes
[ ] No **(SKIP TO INVITATION)**

13. When was the last time you participated in a focus group discussion?

[ ] Within the past year **(THANK AND TERMINATE)**
[ ] Over 1 year ago **(GO TO INVITATION)**

Group 1 Sacramento 6:00 Tuesday March 25

COMMERCIAL - GOV.
SCREENING QUESTIONNAIRE
RJR 97-368

RESPONDENT'S NAME: _____

ADDRESS: _____

CITY: _____ STATE: _____ ZIP: _____

HOME #: _____ WORK #: _____

RECRUITER: _____ DATE: _____ CONF: _____

(ASK FOR NAME ON LIST)

Hello, I am _____ from _____. We are conducting a focus group and the topic is gas-powered, 2 cycle, hand held tools. **(GO TO INVITATION)**

Group 1 Sacramento 6:00 Tuesday March 25

COMMERCIAL - LANDSCAPING
SCREENING QUESTIONNAIRE
RJR 97-368

RESPONDENT'S NAME: _____

ADDRESS: _____

CITY: _____ STATE: _____ ZIP: _____

HOME #: _____ WORK #: _____

RECRUITER: _____ DATE: _____ CONF: _____

(ASK FOR NAME ON LIST)

Hello, I am _____ from _____. We are doing a short survey today among people who work in landscaping firms and I'd like to ask you just a few questions.

First of all...

1. Are you the person responsible for selecting and buying the equipment for your company?

[ ] Yes
[ ] No **(ASK TO SPEAK TO THAT PERSON AND REPEAT INTRO AND Q1)**

2. Are you familiar with how this equipment is used and how it is maintained?

[ ] Yes
[ ] No **(THANK AND TERMINATE)**

3. Are you the owner or co-owner of the company?

[ ] Yes
[ ] No

4. How many gas-powered, 2 cycle, hand held tools does your company own?

_____

(RECORD VERBATIM)

(MUST OWN 5 OR MORE TO QUALIFY. IF LESS THAN 5, TERMINATE, RETAIN AND EXPLAIN YOU MAY CALL-BACK)

5. Record size of business.

[ ] 1-4 employees **(RECRUIT 4)**
[ ] 5 or more employees **(RECRUIT 4)**

(GO TO INVITATION)

DISCUSSION GUIDE
RJR 97-368

WARM-UP/PROTOCOL/INTRODUCTIONS

CURRENT USAGE

Type and number of gas-powered hand held equipment owned.

Self/others usage.

Frequency of use.

Any perceived problems or issues with current equipment?

Frequency of replacement? How long does equipment last?

Plans for purchase in next several years? Why/why not?

Determine price sensitivity.

ATTITUDES TOWARD AIR POLLUTION

Determine perceived magnitude of problem, self concern/consciousness and previous actions/behavior to improve.

PRESENT PROPOSAL

The California ARB has proposed emission standards for hand held lawn and garden equipment beginning in 1999 - outcome will be that there may be other options available that meet the standards and may be slightly more expensive.

Determine overall reactions. Probe for potential positives/negatives. Believable that this type of equipment significantly imparts harmful emissions? Why/why not?

Identify expected behavior. Changes? Reasons why/why not?

PRESENT OPTION TO 2-STROKE

A potential technological approach to meet the new standards will be 4 stroke engines with catalytic converters or other options.

Obtain overall reactions. Identify reasons why positive/negative.

Expected behavior change? Why/why not?

REACTION TO BENEFITS

- 4 stroke engines w/catalytic converters will use less fuel, e.g., commercial $150 over the life of equipment.

  Reactions? Degree of benefit? Motivating? Why/why not?

- Eliminates procedure of mixing gas and oil.

  Reactions? Degree of benefit? Motivating? Why/why not?

- Reduction of emissions is a two fold benefit - less pollution in air and universe and more healthy from individual perspective.

  Reactions? Motivating? Why/why not?

- New equipment will have extended warranties - 2-5 years. (If unit breaks, it will not meet emission standard and as such will be covered under warranty)

  Reactions

REACTION TO DRAWBACKS

- New equipment expected to heavier (1-2 lbs per 12 lbs equip).

  Reactions? Barrier to usage? Why/why not? Determine magnitude of barrier.

  Identify tolerance levels for size and weight.

- New equipment expected to cost about $35 more than comparable old 2 stroke versions.

  Reactions? Barrier to usage? Why/why not? Determine magnitude of barrier.

  Identify degree of price elasticity. What if new equipment $50 more? $75 more? $100 more? $25? $15?

  If price sensitive explain cost to be top-end and over time expected to decrease. Explain corporate average and obtain reactions and likely behavior.

EXPECTED BEHAVIOR

Determine expected behavior changes, if any.

Explore options and self expectations. Use current equipment vs new equipment vs electric vs ??? Timing? Usage? Repairs?

BACKGROUND INFORMATION TO DEVELOP DISCUSSION GUIDE

Objective

The objective of the task is to explore consumer attitudes from focus groups toward price increases of handheld equipment to reduce noxious emissions as a result of the 1999 Tier II Emission Standards proposed by the California Air Resources Board (ARB).

Background

The ARB was required to consider regulating the emissions from off-road mobile sources, including engines used in utility and lawn and garden equipment, by the 1988 California Clean Air Act (CCAA) as codified in the Health and Safety Code (HSC).

As a result of the CCAA's HSC requirement, the ARB has established two tiers of emission standards for utility and lawn and garden equipment engines. Each tier has two sets of standards; one is for non-handheld equipment and the other is for handheld equipment. The non-handheld equipment category includes, to name a few, walk behind mowers, riding mowers, pumps and generators. The handheld equipment category includes, to name a few, leaf blowers, edge trimmers, string trimmers and chainsaws. The focus of this study is on the handheld equipment.

The Tier I emission standards took effect in 1995, and have been met with only simple engine and carburetor modifications. The more stringent Tier II emission standards will take effect in 1999, and are considered technology-forcing. Potential technological approaches to meet the Tier II emission standards include, but are not limited to, two-stroke engines with a better or advanced scavenging process and catalytic converter, and changing from two-stroke engines to four-stroke engines. Four-stroke engines are somewhat heavier and more expensive than two-strokes, but have much lower pollutant emissions. While adopting these technologies into engines used in handheld equipment reduces noxious emissions, the costs of the equipment will also increase.

Discussion Subjects

The major discussion subjects for the focus groups will be focused on the effects of the proposed Tier II emission standards on the equipment cost and operation, as well as the emission levels. Specifically, effects such as reduced operator exposure to noxious or hazardous emissions, reduced fuel consumption, elimination of mixing oil with fuel for one technology, and the projected cost increase will be discussed. Information on the emission reductions and cost-effectiveness of the emission standards, as well as potential alternative measures with costs and limitations to achieve the needed emission reductions if the 1999 standards are not retained, will also be discussed.

Reduced operator exposure to noxious emissions - Gasoline engines used in lawn and garden equipment produces noxious emissions, such as airborne carcinogens and particulate matter (smoke). According to a study done by the Environmental Protection Agency, exposure to airborne carcinogens, such as benzene, formaldehyde, 1,3-butadiene and acetaldehyde, and particulate emissions can increase the risk of acquiring cancer. Exposure to fine particulate matter in smoke also increases the chance of respiratory diseases such as colds, cough, bronchitis, and pneumonia. Also, emissions from gasoline engines include hydrocarbon (HC), oxides of nitrogen (NOx), and carbon monoxide (CO). HC and NOx reacts with sunlight to produce ozone or smog. Ozone is found to cause irritation to the human eyes and respiratory system. CO emissions is found to cause dizziness to some people, or even death if over-exposed.

The 1999 standards will reduce the HC and CO emissions by about 60 to 80% from the 1995 California-certified engines. Compared to the engines sold before 1995, the reduction is about 40 to 60% more. Since the standard for NOx emissions remains the same for both tiers, minimal effects should be observed. Also, the 1999 standards will reduce fine particulate emissions by about 95%.

Reduced fuel consumption - In addition to reducing the emissions, the technology used in the engine for controlling emissions will also reduce fuel consumption - i.e. a more efficient engine. Based on an analysis, commercial handheld equipment users would save about $151 on fuel costs during the equipment lifetime, and residential handheld equipment users would save about $6.

Elimination of mixing oil with fuel - One of the potential technologies to meet the standards is to convert two-stroke engines to four-stroke engines (like the one used in the Ryobi's string trimmers). Since they are lubricated with internal crankcase lubrication oil, four-stroke engines eliminate the need of mixing oil with fuel. This also eliminates the oil smoke in the exhaust.

Projected price increase - The projected price increase for utilizing the potential technologies in engines used in handheld equipment to meet the standards is estimated to be about $33, depending on which technology is used. The consumer price for handheld equipment varies from a simple string trimmer of $100 to a chainsaw of $300. Thus, the projected price increase is about 33% for a $100 equipment, and about 11% for a $300 equipment.

In response to these price increases, some consumers may choose to buy electric string trimmers or chainsaws. Plug-in electric units are about 30% less costly than present gasoline units, but may be less convenient to use.

Emission Reductions - Based on our analysis, the 1999 emission standards will reduce about 192 pounds of HC emissions, 347 pounds of CO emissions, and 7 pounds of PM emissions for a commercial handheld equipment throughout the lifetime of the equipment. As for residential handheld equipment, the 1999 emission standards will reduce about 8 pounds of HC emissions, 14 pounds of CO emissions, and 0.3 pounds of PM emissions

throughout the lifetime of the equipment. It was estimated back in 1990 that California has about 185,000 units of commercial handheld equipment, and 1.7 millions units of residential handheld equipment.

Cost-effectiveness of the standards - cost-effectiveness is a measure of how much it would cost to obtain the emission reductions generated by an emission control program. For later comparison, a cost-effectiveness value of $1,000 per ton of reduced pollutant for an emission control program is considered very reasonable. Other control measures that were implemented by the ARB has a cost-effectiveness value of more than $15,000.

For the commercial handheld equipment, the projected price increase to the user is about $33. However, the user would save about $151 on fuel throughout the lifetime of the equipment. Thus, the total cost to the user is -$117 (i.e. the user actually gains $140 by using a 1999 emissions-certified handheld equipment). If all cost is allocated to reduce HC emissions, the cost effectiveness value is about -$1220 per ton of reduced HC emissions. If all cost is allocated to reduce CO emissions, the cost effectiveness value is about -$673 per ton of reduced CO emissions.

For the residential handheld equipment, the cost-effectiveness value is about $7,032 per ton of reduced HC emissions, if all cost allocated to reduce HC emissions. If all cost allocated to reduce CO emissions, the cost-effectiveness value is about $3,881 per ton of reduced CO emissions.

Some Proposed Questions

The following are some questions that will be asked, along with specific data or information discussed above, in the focus group study.

i) How much extra would you be willing to spend for a less polluting, fuel efficient, handheld equipment? 10%, 25% or 50%?

ii) Would increased in size and weight of a handheld equipment that you are interested in buying affect your buying decision and/or usage habits?

iii) What effect would the imposition of emission controls have on your buying decision? Would you be more likely to buy an electric, buy an emission controlled gasoline piece of equipment, or buy no equipment?

iv) What impacts - positive or negative - would the proposed emission standards have on you/your operations?

v) From the standpoint of California as a whole, would you support adopting these emission standards? Why or why not?

ARB 2 CYCLE/LANDSCAPERS
3/25/97 6:00pm
RJR 97-368

INTRODUCTIONS

M: TELL ME TYPE AND NUMBER OF HAND HELD EQUIPMENT THAT YOU HAVE AND GAS OR ELECTRIC. ARE YOU PRIMARY USER OR ARE OTHERS IN COMPANY PRIMARY USER? HOW FREQUENTLY DO YOU USE IT? PERCEIVED PROBLEMS WITH CURRENT HAND-HELD EQUIPMENT. HOW OFTEN ARE THEY REPLACED?

I am in the trade service business and we primarily use chain saws. We have mowers, small hand-helds and the backpack type. Stringline trimmers, not very often. Gasoline powered hedge trimmers. That is about it. Everything is gas powered. The chain saws, small medium and large, we replace the small chain saws, they probably last us about 10 months and they are either worn out, falling out of the tree or run over by a truck. The medium ones will probably last us about 16 months, same thing happens to them. The larger ones might last us for about 4 or 5 years, because we don't use them everyday. They are sturdier, but then we don't use them everyday. Our inventory probably totals at the Sacramento office probably totals about 65 chain saws, 10 backpack blowers and 4 hedge trimmers and 2 stringline trimmers.

With the tree care/landscape do I can do either, or , I am not sure exactly how long they will last, we are still getting the crew set up, we are still buying new things. Anywhere from approximately 10-15 chain saws, small medium and large. Blowers, the tree part has 3 and landscape part probably has closer to around 30. Weedwackers, they probably have about 30 weedwackers and 2 hedge trimmers. (DO YOU ORDER THESE?) I do the chain saws and the pack blowers, some weedeaters. I will place an order.....(GAS OR ELECTRIC) Yes, they are gas. (HOW OFTEN REPLACED?) I haven't been there that long, we are still getting our new crews set up so we will buy more new stuff rather than replacing. Where I have more experience is with getting new stuff and haven't been monitoring replacement. (HOW LONG HAVE YOU BEEN THERE?) Just over a year.

I am with the county of Sacramento Department of Parks and Recreation. I have been there 30 years. We probably use every type of lawn care equipment you've got on the market. I represent just American Parkway and Cherry .. Golf Course, there are other facilities. But we probably just on the Parkway we have about half a dozen of your pole pruners and half a dozen of the pole pruners with the hedge trimmers on them for the bikeway. We have 6 hedge trimmers, at least a dozen

chain saws, big, little, small, smaller and probably a dozen backpacks and probably a dozen string trimmers. All gas, no electric. (REPLACEMENT?) As needed. We don't put any life expectancy because sometimes our hedgetrimmers are working 5 days a week, 8 hours a day and they are going to be gone in a year or less. When they go down and we take them in to get them fixed and it is going to cost X number of dollars to fix, it is cheaper to buy them. Especially string trimmers, we don't mess around with string trimmers too much.

We have Toro machines, Jacobson tractors, Echo PB400's, weedeaters, hedge trimmers, Echo and Tasks. Most of this equipment, Toro machines last me 5-6 years, 21" lawnmower. (HAND HELD EQUIPMENT?) Ok PB400, they last me about 3 years, weedeaters last about 3 years. We take pretty good care of it. The hedge trimmers, they go about 2 years before we wear them out. All 2 cycle. Everything is 2 cycle, we don't have any straight gas other than the tractors.

We are a full service landscape company, primarily maintenance. We probably have 8-9 blowers, everything is gas, there is no electric at all. About 5 sets of shears, 10 different stringline trimmers, we also use a couple with the edger blade on them for edging. 4 or 5 chain saws and we have 12 2 cycle mowers. Most of our equipment will last at least 3 years or more. We have a real regimented maintenance program and they get serviced every Monday, the gas is mixed by one person and one person alone, so it is always mixed right and not mixed different every week. They are constantly kept clean and taken care of, because our philosophy is that the equipment is our life. If we are constantly going down to buy new stuff, then we are not going to make any money. So I have whipped the guy so the guys take care of it, the mowers get washed every day. The stuff that does break, we have a mechanic on staff, so the little things that happen to them, a cord breaks or something like that, it is repaired right away. Most of the problems that we have seen with our equipment we use and the different brands is just misuse, not poor quality of the equipment, but just misuse. The don't use it right so they break it.

I am a tree service, and I have about 30 chain saws, big, little, small. I replace them about every 2 years. All gas powered.

M: WHO IS RESPONSIBLE FOR PURCHASE? EVERYONE. ARE YOU PRICE SENSITIVE OR NOT, LOOKING FOR QUALITY?

Our philosophy is quality. The money is not an issue, I would rather spend the extra money for the quality of the item.

I think over the years, we have all gone at one time or another and bought the less expensive brand and found that it doesn't work as well, it breaks down sooner. So even though you may have a brand that is a few bucks more, you know that it is reliable. Plus getting parts is easier if it does break. The servicing...

Price isn't an issue unless you can run across the street for the same thing for $50 less, that is probably what you would do. You try to go to a facility that can provide you with service and parts immediately, because if I have a large tree to cut and I can't get a carburetor for the chain saw, I can't do the job. So I have to be able to get parts, that is extremely important.

Brand name recognition and service comes over the sale price.

Just the opposite with me. It is price 100%, because we go on bid, everything is on bid. And HB Carter is cheap.

However, you wouldn't specify that something was junk.

Everything is low bid and we have to go thru that, we call that no brain bids. We can spec around the low bid, so we don't get the junk stuff.

In certain situations, it has always been done that way, and you are suppose to go to X part and always get the C product. At certain times, you go and do what you have to do to get the part.

When you have one chain saw per se, brand name, we do a lot...we know what brand of weedtrimmer we want, but we may call 4 different dealers and try to finagle it down to who will give us the best price. But it is not a question of we will take any brand for the cheapest price. We want this brand and this model and let them go against each other for the amount. Just like they do to us when they want the service.

M: FAMILIAR WITH 1-10 SCALES, HIGHER NUMBER POSITIVE, LOWER NUMBER NOT SO POSITIVE. PUT DOWN 3 NUMBERS ON 3 DIFFERENT DIMENSIONS. AIR POLLUTION - IS AIR POLLUTION A PROBLEM? HOW CONCERNED ARE YOU INDIVIDUALLY WITH AIR POLLUTION? WHAT HAVE YOU DONE IN THE PAST IN TERMS OF YOUR INVOLVEMENT IN TERMS OF HELPING THE AIR POLLUTION SITUATION?

AIR POLLUTION - WHAT KINDS OF NUMBERS? 8,7,6,8,10,9, COMMENTS?

When you live in Sacramento, you find out after you live here for a year that is the third worse air in the United States. I think that you are going to have a concern.

M: INDIVIDUAL CONCERN? NUMBER? 9,10,8,6,7,7.
INVOLVEMENT EFFORTS? NUMBER? 3,3,3,10,4,3.

WHAT HAVE YOU DONE?

I use to burn wood in my wood stove until about a month ago when I quit doing it. So that I am adding less pollution. Probably because of that and because it was time to get a forced air heater.

Planting trees, commuting with other people.

"10" I do a lot of lawns and I take care of a lot of shrubs and trees and I am taking a lot of carbon monoxide and everything else and changing it to oxygen. Plus, on top of that I use a lot of pine sugar in my lawns to help it.

"4" I keep my car smogged.

"3" I plant a lot of trees and things like that.

I didn't even consider planting trees, I do that to make money.

But you are also clearing out the air, because they use the carbon monoxide, lawn.

My opinion was that that is not something that I am doing for the environment and to clean the air.

The books tell you that for so many thousand square feet of lawn it keeps a family of 3 alive and breathing for a year, so...

M: I AM GOING TO GIVE YOU PIECE-MEAL INFORMATION HERE. I WANT YOU TO REACT TO WHAT I TELL YOU. EFFECTIVE IN 1999, THE CALIFORNIA AIR RESOURCE BOARD HAS PROPOSED EMISSION STANDARDS FOR HAND-HELD LAWN AND GARDEN EQUIPMENT. THE OUTCOME WILL BE THAT THERE WILL BE OTHER EQUIPMENT AND OPTIONS AVAILABLE. SOME ARE FAMILIAR WITH TIER 1 CHANGES THAT CAME INTO EFFECT IN 1995, THESE ARE TIER 2 CHANGES. WHO IS AWARE OF TIER 1? 3 HANDS UP. REACTIONS?

Very negative. I don't know how we can do our business without gasoline powered equipment. Battery powered, out of the question. Electrical cords in a tree is going to be unbelievably dangerous. I don't know how we will do our business.

From a landscape aspect, how can I go out and take a 1 acre property and mow the lawn and edge the lawn and prune the hedges with an electric piece of equipment. I have to have 500,000 feet of electrical cord, plugs on every wall to plug into.

And you are going to have a generator somewhere running and polluting the air, anyway to give it power. I think that the whole issue that is irritating to some of us is because we are out in public and we are a visible industry, we are targeted. When I get on the freeway and I am behind a city school bus, spouting out big old black clouds of black smoke, with nobody on the bus...why aren't they cracking down and passing laws to stop that? And test those buses. They go by the Smog Check II, the little station on the side of the road, and there is no flash from the camera taking it's picture or anything. It is a city vehicle, a county vehicle. But private industry is being told we can't do this and we can't do that.

I think there is a lot of misuse of a lot of equipment for a lot of years. Especially the blowers, they are the biggest being attacked. I think the LA area, they banned it from the city. Beverly Hills. They can't use a blower in Beverly Hills, and then the Parks and Recreation, they lost about 3,000 blowers. But it is because most of these guys don't know how to use them.

That was the noise pollution thing more than anything.

M: WHAT DO YOU THINK OF THIS PENDING EMISSION STANDARD?

I wasn't really familiar with it. My first reaction was what pieces of brand new equipment are they going to be making miracles that won't do all this? But I thought it would be good for the home owners. We couldn't do it with electrical, there is no possible way.

M: WHAT WOULD YOU DO?

Go to hand. If you can't run the equipment, obviously in my industry, the landscape industry, per se, I consider the tree industry a little differently than ours, but the landscape industry is depending upon the manufacturers to provide us and do something to give us the equipment. Unfortunately we know that with their Research and Development and everything else that they have to do, it is going to cost us more for our equipment. Which means that we have to charge more for

our services. Which means that it makes it even more competitive than it is. I think that if the government had done something and tried to work voluntarily with the industry as opposed to just pass a law and say "You have to do it".

I have seen in the parts they are coming out with in the Cargreens(?) mowers, they have new greens mowers out that are electric. We haven't tried any because we haven't purchased any of the new equipment, but there are some equipment coming out that is electric. And if the can get a new Greens mower that can mow 18 greens on a golf course every day, then they have come a long way. That is the only thing that I have seen in the industry so far that looks like it might work is the electric green mower. (WHAT DO YOU THINK YOU ARE GOING TO DO?) What will we do? What the law says that we have to do. Whatever they say you have to do.

(WHAT WILL YOU DO?) I don't have a clue. What will probably happen is that there will be a reasonable compromise at some point in time. I use to be involved with the golf cart industry, gas and electric, and Car 1 affected the golf cart industry and they worked it out. Because there is no good alternative in an electric golf cart as opposed to a gasoline golf cart. The greens mower that you can plug in every night and keep at the golf course, that will work. But a chain saw in a tree won't work, battery powered or electric, it won't work. It is my belief. If it had been a good option, we would have seen it a long time ago.

When operating in his business, my question is if he goes to trying to use electrical cords inside of trees, what does his workman comp carrier going to tell him?

There is probably an OSHA law against it.

That is the same thing as using an electric lawnmower. Because if you are doing an acre, you have 250 feet of electrical cord out there and you have a guy trying to swing 250 foot cord 21 inches over, he is going to throw his back out.

For a small business like ours, what the city may be able to afford, or the county, in electric mower, I am not going to be able to afford something like that. Look at the price of electric cars and what they provide now with the same technology.

That is the problem with the private industry, the county does not get any more money, the state can. When they make a law that you will use this, this and this, the state makes a law and the legislation passes it, they get the money. The county has to work within their existing budget to buy that new equipment. We don't get handed money on top of that. We don't get to go out and buy the best equipment or stuff like that. We have to work with the existing money that we have, like a

budget, like you have to work with. If they come out with all this brand new equipment in 1999 it has to be, we have 15 or 20 times as much as any of you guys have that we can't use any more. That is a lot of stuff.

Electrics, they just don't have that much power that a gas one would have. If you cut the cord, someone is going to electrocute themselves. I just have to do what I have to do, that is about it. (NEGATIVE FOR YOU?) Kind of neutral. I don't like electric saws.

You sure couldn't use it in inclement weather. Besides the repair people for the electric would be limited. I don't think that there is that many electrical repair people around that can...I think that they came out with a battery lawnmower and I think it was Toro that came out and they did a test for 4 hours or 2 hours doing a normal 2,000 square foot home. That means that guys like Steve here and myself, maybe Randy and Patrick are going to be buying about 8 batteries, charging them up everyday so these guys are going to have enough battery power to do it.

M: LET'S SAY THAT THERE WAS A TECHNOLOGICAL DEVELOPMENT THAT WILL MEET THE NEW STANDARDS AND THERE COULD BE A VARIETY OF OPTIONS. ONE OF WHICH COULD BE A 4 STROKE ENGINE WITH A CATALYTIC CONVERTER OR A 2 STROKE ENGINE WITH A CATALYTIC CONVERTER THAT WOULD MEET THOSE STANDARDS. WHAT ARE YOUR REACTIONS?

No problem then.

I had an outboard motor for how many years, 2 cycle. It is time to get a new engine. I know that all these new laws are coming, so what's sitting on my boat right now? A Honda 4 stroke engine. We know that the laws are going to change. When I bought it, I had to pay a little more for it, but I got a Honda 4 stroke engine. I still fish with it just like I did with the 2 stroke.

M: WHO HAS NO PROBLEMS WITH THE OPTIONS? EVERYONE ELSE HAS A PROBLEM?

I have a problem. First of all, if they came out with that, I want to know if they could retrofit the existing equipment that I have. If I have 132 lawnmowers sitting there at $850 a piece, I just don't want to go out there and scrap them.

You probably wouldn't have to scrap them. They would be new purchases.

If they came in as 1999, they came out with this new lawnmower, catalytic converter lawnmower, and I am sitting with 2 stroke engines here, Toro machines, can I retrofit them so I can still use them? (WHAT IF YOU COULDN'T?) At my age, I would probably just close the doors and forget it and quit and let the men go and let them work for whoever is in the business.

I am not very familiar with the 4 cycle but my first reaction would be okay, now they are saying carburetors, my reaction is more towards how are they going to make sure they are all in operational condition and running up to...how are they going to enforce it, make sure that it is still doing the job it was meant to. Keeping the air pollution down, how are they going to monitor and make sure that they are all properly tuned and doing what they are suppose to be doing?

If the 2 cycle met the standards, I wouldn't have any problem at all. Cleaner air, a machine that works, that meets the standard, no problem at all. That is my knowledge, the 4 stroke wouldn't work in terms of a chain saw or anything that you turn upside down because you have a crank case in the 4 stroke and when you turn it upside down, the oil fouls the engine and it doesn't work. A lawnmower as a 4 stroke, you don't turn it upside down. Chain saws and hedge trimmers, you got to be able to turn them on their side. Unless there is great technology. I have some serious doubts.

If that is the only option to meet the standards, I think that the industry should be looking at retrofitting what we have and doing something to add a converter to the existing machines, because with my business, I can't afford to go out and buy 12 brand new 21" mowers, 8 blowers, 5 sheers, 10 weedwackers, re-equip my entire firm. I can't do it and stay in business.

Not at the price they are going to charge us.

Even 4 stroke if they got it so it works, it is going to be 3 times as much as, because of this new technology, it is going to be 3 times as much as what I pay now for a hedge trimmer, for sheers. All the line of credit in the world, unless I have Apple's budget.

M: IMPRESSION THAT 1999 TO MEET THE EMISSION STANDARD YOU COULD NO LONGER USE THE CURRENT EQUIPMENT? OR DO YOU FEEL THAT YOU COULD USE IT?

I am not familiar with the new Tier 2 thing.

M: NEW TIER 2 NECESSITATES NEW PRODUCTS BEING ON THE MARKETPLACE. THE OLD HAND-HELD 2 CYCLE, 2 STROKE GAS POWERED PRODUCTS WILL NOT BE ON THE SHELVES. IMPRESSION YOU CAN STILL USE OLD PRODUCTS AFTER 1999?

Sure, I don't think a law would outlaw existing equipment.

I think they will phase them out, they won't just shut us out.

I think we can use them because what is happening now, I know in the PB400's, an Echo product a back pack blower, they already changed the carburetor and it has got, by law, where we use to be able to adjust them free hand, there is a clip on piece that goes on all new equipment. Number 2, there are lower RPM and decibels from the blower. If they are telling me that I can't use existing, what I got. I don't know too much about this emission law. Number 1, I don't know how they are going to sit there and regulate everybody, because there are over 25,000 gardeners in this town, landscape maintenance companies, all over the city. Are they going to be able to sit there and monitor how much carbon monoxide is coming from a 2 stroke engine. Because most of us are using 2 strokes. We buy gas and mix it together and then we can put it in an edger.

M: WHAT WILL CHANGE HERE, YOU WERE CORRECT YOU WILL STILL BE ABLE TO USE YOUR CURRENT PRODUCTS THAT YOU HAVE. WHAT WILL CHANGE IS THAT THOSE PRODUCTS WILL NO LONGER BE ON THE SHELVES, AVAILABLE FOR YOU TO PURCHASE, BUT THE NEW TECHNOLOGY WILL BE AVAILABLE.

Will parts be available for the old ones? (DO YOU EXPECT IT TO BE?) I would hope so.

Because this equipment eventually wears out, the motor or whatever. Because of the way that it is made, eventually it wears out. But to not be able to get a pull start cord for one. I don't know how drastically they will change the equipment.

I don't see the equipment manufacturers not keeping the repair parts.

Isn't there a law that with any equipment that comes out they are required to keep parts for 10 years after the end of it. I know that in the automotive business it is 10 years.

M: I WANT TO GO THRU A COUPLE OF POTENTIAL BENEFITS THAT WILL BE AVAILABLE IN 1999 WITH THE NEW PRODUCTS THAT WILL

BE ON THE SHELF. HAVE FAITH AND TRUST THAT THE NEW TECHNOLOGY WILL BE APPROPRIATE AND FIT ALL KINDS OF THESE HAND HELD, INCLUDING CHAIN SAWS. THAT IT WILL BE A 4 STROKE WITH A CATALYTIC CONVERTER, IT COULD BE A 2 STROKE WITH A CATALYTIC CONVERTER. LET'S MAKE THE ASSUMPTION THAT THERE WILL BE AN ACCEPTABLE PRODUCT OUT THERE. BENEFITS AND REACTIONS - HOW MOTIVATING? 10 - VERY MOTIVATING. LOWER IS LESS MOTIVATING.

WHETHER A NEW 2 STROKE OR A NEW 4 STROKE WITH CATALYTIC CONVERTERS, YOU WILL USE LESS FUEL. ESTIMATE - APPROXIMATELY $150 FUEL SAVING OVER LIFE OF EQUIPMENT.

It is a "3". It is not a big number considering how much money we spent and we use, it is just not worth it.

I gave it a "5". It is not that motivating. I am motivated to go out and buy this equipment because I am going to save this much money, but I am going to lose all this other equipment. So it is not really motivating to save for the life of that piece of equipment. I only go and buy a 5 gallon can at a time. If I could save that $150 bucks in one day, I would think about it. 5 year life expectancy of a chain saw or something like that.

Pennies a day. (NOT MOTIVATING?) No.

"3". It is just pennies a day. You can go thru 2 gallons of gas in a week, maybe more.

When your truck uses $30.... Five cents a day.

"7". We spend probably 120 gallons a week for the 2 cycle mowers, blowers, sheers, weedwackers. That is a lot of fuel. Last summer when prices shot up so quick, we ended up charging our customers a surcharge because fuel expenses went up drastically. Our business is one truck will go out and service 4 to 8 accounts a day and starting and running that equipment on every account. So we go thru a lot of fuel. So something that is going to save me $150 a year per piece of equipment is a substantial savings. Just that savings right there could probably buy 2 new pieces of equipment or 3 pieces of equipment a year.

"5". If your estimates of $150 a year (NO, OVER THE LIFE OF THE PRODUCT). If you say that the average machine lasts 5 years, that is about $30 a year, which is about $2.50 a month per machine. For me, I spend maybe $2,500 to

$3,000 a month on fuel. I don't know, I would have to sit down and work out the basic cost...2.50 times 100 machines, that is not too bad per month, depending upon the equipment and if it holds up for 3 years without breaking my back for repair work.

"5". It is the way I figure out how many pieces of equipment you have, you are going to save yourself a couple of dollars a month over the life expectancy of the piece of equipment. On fuel cost, we go thru $5,000, $6,000 a month and that is everything that we've got. You are talking about...it is a small amount.

M: LOW NUMBERS?

It doesn't motivate me. We have so many other overheads that this is just a drop in the bucket.

Maybe if it was factored in with 10 other benefits, it would be the one that would sway you. But as is...

It doesn't hold it's weight.

M: ANOTHER BENEFIT FOR THE 4 STROKE, WOULD BE THE ELIMINATION OF THE PROCEDURE OF MIXING OF THE OIL AND THE GAS. 1-10?

"0". I wouldn't even bother. 4 stroke , like on a Briggs IC 5 horse Briggs lawnmower would only last 6 months. Then you would be replacing the engine.

You bring up new problems. We have been teaching our guys to mix gas and oil for their entire career and now we are saying don't mix gas and oil. So we have some that mix with gas and oil and some not mixed. It is going to come backwards and forwards and we are going to be in more trouble. Guys are going to put gas and oil mix in a 4 stroke engine. They are going to put clear gas in a 2 stroke engine. They are going to get confused.

It is tough enough to get them to, when they have a truck with regular gas and mixed gas to check and make sure they put mixed gas in the proper equipment. Now they have to check the oil on the equipment too. They don't check it on their truck.

And on #2, the Briggs, the only one that I know of is a Honda or a Kawasaki in the 4 stroke, they have oil pumps. But Briggs, which is the biggest manufacturer of engines with splasher, you go one way you bury the flasher and it ain't doing

nothing for the pistons and rings. You go the other way, you ain't got no oil, because of this flasher, the oil is not there...

My understanding of a 2 cycle engine as well is that it relies on the gas oil mix to help cool it. A 4 stroke engine relies just on the air fuels to cool it. I am very leery of the longevity of a 4 stroke, air cooled engine that is running at high RPM. That is a real concern for me.

M: FOCUS ON THIS SAVINGS OF ELIMINATING A PROCEDURE HERE.

"1". It is just not going to work. A lot of the guys don't check the oil in the trucks. I tell them everyday, before you start that thing, check the oil. They don't do it and I have to do it myself. I would just rather be on the safe side and have a 2 stroke.

It is the same way with most of these guys, we hire a lot of seasonal employees and I am tired of painting the tops of cans, this is blue and that is mixed gas, this is green tops and it is straight gas. Now another one to decide that these mowers take this. It is going to be a problem. With all the seasonal employees we hire, we are going to be doing a lot of training, a lot of burning of engines before we get down to the nitty gritty.

We aren't dealing with brain surgeons.

I spent 6 hours training my men to keep their fingers out from under the lawnmower when it is running, and I have had 13 guys cut off all 4 fingers.

First I put "5", but listening to everybody else, I changed it down to a lower number. I hadn't thought of all these things. I thought, good, we don't have to mix oil any more. The men are always coming back to us that they can't mix the fuel properly. You have to make sure that the gas tank is completely empty before you mix the whole thing, so I thought great, that is one problem less that I have to deal with. Listening to everyone else, I hadn't thought about all that.

M: DO YOU THINK THAT WHEN CURRENT 2 STROKE IS OBSOLETE AND OFF SHELVES, AND ALL WILL BE 4 STROKE OR NEW 2 STROKE, WILL IT BE A BENEFIT THEN?

If there is only one selection of fuel, yes. You are fine. But in the phase in-phase out, you are going to have a problem.

I don't think that the 2 stroke engine is ever going to be off the shelves. What we have now may be, some new 2 stroke will be on. They are the most efficient things around.

M: ANOTHER BENEFIT. THERE WILL BE A REDUCTION OF EMISSIONS, LESS POLLUTION IN THE AIR. LOOKING AT CURRENT PRODUCTS SINCE '95, THERE WILL BE BETWEEN A 60-80% LESS POLLUTANT IN THE AIR BECAUSE OF THIS.

"7". I would be interested, but I am not really that motivated. I do care about the pollution but I am not going to give it higher than a "7". I was seriously thinking about a "5". Because you said if it is a motivating factor. You start to have a combination of all of these motivating factors and then we might start thinking... But right now you are giving us one at a time, we are only concerned about 1 at a time. We can't bring them all together. If you let us bring them all together, we might give you a different number.

"6". I thought it would be a good selling factor towards clients. To my clients, that we are out there trying to help the environment, not only by doing proper cuts and stuff, but we care. They like that kind of stuff.

"3". Like I said earlier, I fell that our industry is unfairly targeted, just to go buy and have a new piece of equipment because it is going to clean the air or is going to put out less pollutants than we do, I don't think that it means that much to me.

The landscaping industry is not a smoke stack industry. I don't think that we should be a target. I put a "9" however. It is important to me to pollute less. If there is something that we can do, then let's do it. If the technology is there and if it works. If it is just window dressing, count me out. Window dressing by saying, here is a landscape industry, here is the outdoor power equipment industry, look at all this great stuff that we are doing and it is not really happening. I won't go along with that. But if this is truly happening and there is something that can be done with technology and it works for the contractor, then I am all for it. But I truly don't believe that we are up there on the high end of the scale of polluters, we being the outdoor power equipment users.

Do manufacturers have any thought about buying back our old stuff, if they want to give us the new stuff? Give us a trade in value for it. We know that in a couple of years we are going to have to do it, and if they put some of this stuff on the market today and we know that we are going to have to buy something next year, it would be nice they put it out a year early and we are going to give you something.

Something is happening there, something is happening at Cal Expo, I think it is this weekend. Something that if you go and trade in this weekend, your gasoline lawnmower, they will give you a $200 trade-in towards an electric powered mower.

Yes it is the battery powered.

Obviously that is for homeowners.

If you want to try that battery powered one, call Capital Power, they will probably get one for you and then you can use it for the day, they will give you 3 batteries, I think.

M: BACK TO THE BENEFIT.

"5". I care about the environment and stuff like that. If they could make something that will benefit...Not motivating. I don't know.

"5". Because they are going to be trying to regulate us in "99. A small engine, 2 cycle which most of the landscape companies, tree companies all use. That is 60%. If they aren't working on the other half of this emission thing, automobiles and all the rest of the stuff, what little bit they are going to save from us ain't going to amount to nothing. So I believe that we are just getting more regulations.

M: REDUCTION OF EMISSIONS WILL MAKE IT CLEARLY MORE HEALTHY FOR THE USER. TALKING ABOUT A USER THAT IS VERY CLOSE TO THE EXHAUST, CLOSE TO EMISSIONS. BENEFIT? MOTIVATING?

I don't really know how to use one. If you gave me some figures, or you told me that it is going to be healthier for my operators, I would probably be somewhat motivated, because they are the ones that have to sit there and breath that exhaust.

Actually, that is under the California EPA and Cal OSHA, if you use some of this equipment, they are suppose to have earmuffs on for the backpack blowers or the hedge trimmers, safety glasses, they also have dust masks that they can wear. If they are spraying chemicals, they have to have respirators, rubber boots, rubber gloves,

(CHANGE OF TAPE)

...employees or anybody in business, I want them healthy. I want to see them exercise 15 minutes before they go to work, get their blood running, get rid of the alcohol from Saturday and Sunday.

"8". We are always doing the safety issues, trying to make it better for the employees, stuff like that. So that would just be an easy one to say this is definitely better for them, let's do it.

"8". I really care, trying to make the thing safer for other people out there.

"5". Given certain circumstances, I agree they breathe the exhaust a bit, but typically, we are outside, there is some breeze, you move around. Anybody standing in one spot breathing the exhaust from a blower or weedwacker is not doing their job with it anyway.

Unless you are standing on the sidewalk downtown, near the courthouse. Midday traffic and you are going to tell him that it is going to save him a couple...

I don't think that is a motivating factor, no, not that high.

M: WHO AGREES? IT IS OUTSIDE, WINDS BLOWING ETC.

I agree with that.

It is agreeable, but you also thinking it is going to be healthy for you if you are standing here, it is also going to be healthy if it is blowing. It is still going somewhere.

I gave it "9". To me it is important if we can create a better work atmosphere, let's do it.

M: I WANT TO GET YOUR REACTION. GASOLINE ENGINES USED IN LAWN AND GARDEN EQUIPMENT PRODUCES NOXIOUS EMISSIONS SUCH AS AIRBORNE CARCINOGENS, HAZARDOUS PARTICULATE EMISSIONS. THESE EMISSIONS CAN INCREASE THE RISK OF ACQUIRING CANCER. ANYONE THINK THAT COULD BE THE CASE?

Yes. Just like car exhausts, but my first reaction is what doesn't cause cancer these days?

Take a look at gasoline, you will never touch a gasoline hose. You get the safety operations on gasoline itself and it would scare the life out of you. But I know that

everyone in this room has grabbed a hold of that hose and stuck it in there and just pumped in the gas every day or every other day. But a lot of these standards that they put in the sheets for gasoline, chemicals...

M: ANOTHER BENEFIT. THE NEW EQUIPMENT THAT WILL BE OUT, THE ARB WILL REQUIRE MANUFACTURERS TO REPAIR MALFUNCTIONING ENGINES THAT END UP NOT MEETING THAT EMISSION STANDARD. WHICH IN ESSENCE MEANS THAT IF ANYTHING IS RELATED TO THE ENGINE, THERE WILL BE A WARRANTY ON IT AND THAT WARRANTY CAN RANGE ANYWHERE FROM BETWEEN 2 TO 5 YEARS. A PISTON BLOWS, CARBURETOR IS NOT FUNCTIONING, IT WILL BE THE RESPONSIBILITY OF THE MANUFACTURER TO REPAIR THAT WITHOUT ANY CHARGE OR COST TO YOU.

"5". Because if they are going to give us this warranty they are also going to charge us for it in the beginning. That is going to be reflected in our initial cost. If they do...

I see it as a "3". I use to work for a manufacturer and when those kind of things came up, let's raise the price to take care of everything. They will put a dollar amount to it. All it does is cost us more money.

I gave it a "6", in the middle of the road. Because when someone starts telling you about long warranties, something is wrong somewhere. Some piece of equipment that I bought and I am happy, but don't tell me that if this goes wrong and this goes wrong...are these going to go wrong? Or are these a factor that might go wrong, that is why you are going to warranty it for this long of a period. I mean, who gets that kind of a warranty.

I don't think so, you have it backwards. If they give you a long warranty...the longer the warranty, the more they stand behind the product, the longer the warranty, the better they know that it works. The shorter the warranty...

I am just the opposite.

I went with "8" because I based it partly on my own experience. Products that I have bought, regardless of landscape equipment, my vehicle, my truck is 10 years old, I bought it with 6 year, 60,000 mile bumper to bumper warranty. I never used it, I never had one thing go wrong with that truck. So if that is the case, if they are offering me a 5 year warranty, if something does go wrong, I am covered. I bought that warranty.

So you are going to buy that warranty for this new mower too.

I think by what you are saying, if the manufacturer is smart, if they think that that product is going to last 5 years, no problems, then they can turn around and offer that warranty at an extra charge. Give you a 2 year warranty and then charge you for another 3 years. The guy who buys it, great, they make money off of him. If it doesn't, okay. But the product, I've had good experience and it is an insurance policy, we all have insurance to cover ourselves in case something happens. I am going to pay a little bit extra and have that warranty in case it happens. Why gamble.

This sounds like this warranty is being forced upon the manufacturers by CAR. Not because the manufacturers want to offer it. That is the different motivation on their part.

I put down "8" on the warranty portion of it. If they are going to go 3 to 5 years, I would have to know basically what it is costing me. Warranty is important if the manufacturer or the place that you are dealing with is going to back-up that equipment. And basically that comes between what kind of service you are getting from that person.

M: POTENTIAL DRAWBACKS. SCALE FROM 1-10, A HIGHER NUMBER INDICATES IT IS GOING TO BE A MAJOR BARRIER. A LOWER NUMBER INDICATES IT IS LESS OF A SIGNIFICANT AS FAR AS BEING A HURDLE FOR YOU TO ACCEPT THE NEW EMISSION STANDARDS.

NEW EQUIPMENT IS EXPECTED TO BE SLIGHTLY HEAVIER. PERHAPS A 10 POUND PIECE OF EQUIPMENT MIGHT BE SOMEWHERE BETWEEN 1-2 POUNDS HEAVIER. BIGGER EQUIPMENT MAYBE 20 POUND MIGHT BE BETWEEN 2-3 POUNDS HEAVIER.

"7". (PROBLEM?) I think so. You don't want a really heavy saw in the tree. They are heavy enough now, anything that is 2 pounds more, it is really going to be a hassle to work with.

"8". I was thinking more of it as a demotivator, rather than barrier versus non-barrier. If you are up in a tree, it is going to be longer, the guys are going to get tired faster, you are going to have more wrist problems, slowing down everything.

"8". It would be a major barrier because we are on ladders trimming hedges and trees and things like that and it is bad enough now, hanging over one of those

things and using your hand and the hedge sheers and stuff. Now you are going to add another pound or so onto it. That is going to put an impact on the operator. (10 POUND TO 11?) I would say yes because it is heavier. If something is heavier, it has to put more pressure and we are into this equal opportunity hiring and we have a lot of no 20 pounders out there. They can't operate anything over 20 pounds, pick up anything over 20 pounds. Women, sorry about that.

"6". Virginia made a lot of good sense about the wrist and picking that up. We don't get up on ladders any more, everything that we have is a least 5 feet tall. But you have to still hold that extra 1 pound out there and if you are doing 150 feet of hedge, one pound feels like a back-hoe by the time that you get thru with it.

"3". If guys get tired now, they switch off and trade off. An extra pound is not that much. A backpack blower with the straps and worn properly, the new ones with the handle here instead of a handle here, it is not difficult to operate. They have backpack sprayers and other stuff, they are never on that long. It is not like they wear it all day long. You wear it 15 or 20 minutes and then take it off.

M: DOES IT MATTER WHAT KIND OF EQUIPMENT, A CHAIN SAW VERSUS SOMETHING THAT YOU DON'T HAVE A STRAP, LIKE A TRIMMER.

Hedge trimmer doesn't have any strap. You physically have it out there like this and you are cutting a hedge like say 2, 300 fee of hedge and there is only one guy out there, we are not going to trade off. That guys job is to go out today and trim that hedge. And you talk about a pound or so, up there like this, walking and moving it back up again, that is a lot of weight.

The blowers have shoulder straps we wear. Weedeaters, if they weigh a pound or two, you can put a shoulder strap and a burn thing if you have the big ones, 4 strand job. The chain saws, they are free hand, they have to be free hand, because if they slip or fall, the first thing you do with a hedge trimmer or chain saw, you throw it away. Away from you, but not too far because you have to go back and get it. You don't want to be near that chain, you could open up your leg or your arm or whatever.

That is why we are experimenting with the pole pruners with the hedge trimmer. They are coming out with attachments now, with the edgers on them and the hedge shears. So we are experimenting with that to see if the guys can keep them on the ground, safer. But you can't get that fine cut like you can with the ladder. When that judge is up there, on the courthouse looking down, he likes it looking flat and square.

I put it as a "5". The smaller the equipment every ounce you get is important. Bigger the equipment, it is not that important because you already have a big piece of equipment. It kind of evens it out to a "5", but you are going to get a lot of resistance from users when you add pounds to equipment.

M: ANOTHER POTENTIAL ISSUE. THE NEW EQUIPMENT, THE NEW TECHNOLOGY THAT WILL BE AVAILABLE IN 1999 IS EXPECTED TO COST ABOUT $35 MORE THAN THE CURRENT 2 STROKE EQUIPMENT.

"3". $35 on a piece of equipment with the amount of equipment that we purchase is not that big an issues. Then when you take all the other, the motivating factors and factor those in, $35 is not that much for all of the benefits that you get. $135 yes but $35 would not be a factor.

"3". I agree with Steve.

"2". Because we are going to have to get it anyway. So if they hold the price down to $35, that is pretty good. And we are going to save that much on fuel, anyway, a couple of dollars a week, so it is going to help out. It is going to be mandatory that we get it, it is only going to go up $35.

"5". I didn't have enough information.

If it lasts 5 years, we have a warranty.

Yes, if that is all that we are paying is $35 for a 5 year warranty, okay. All of the things being equal, $35 is a drop in the bucket. I gave it a "2". (CHANGE YOUR IDEA IN TERMS OF A WARRANTY?) Probably. If I could get a 5 year warranty for $35 on a piece of hand-held equipment, that is fine.

"2". $35, if I can't make $35 on an increase for new equipment for my customers, I had better hang it up. Because I am going to pass it on to them.

M: WHAT IF I SAID IT WAS GOING TO BE $50 DIFFERENCE? ISSUE? WOULD NOT CHANGE? (GENERAL AGREEMENT). WHAT POINT WOULD MATTER?

The point would come is the price of a backpack blower compared to a good sized chain saw compared to a weedeater. $50 for a weedeater, no way, that is a lot of money added on to the price of a weedeater. But maybe not to a 36" chain saw. We are paying $800-$900 now for those. Relative to the piece of equipment.

Relative to the price of what you are paying now. If we are going out and buying a set of hedge shears for $700, now it is going to be $750, gotta have it. We don't have a choice. But then it goes back to the earlier question where you were asking about price. Yes, if I can go out and get one manufacturer is $900 and they have all switched to the new one and the new one, from another manufacturer is $700, if I can save $200, I might think twice about it.

Like a lawnmower, we spend $895, so $50 is not going to be that much more. If I buy, if Steve buys 20 or 30 or whatever he needs on a bid. But as a company, I can do the same thing. I can buy in November or December and don't pick it up until February and I can save myself 20-25%. So $50 or even $75 isn't going to be a problem because I am going to get that kind of a discount. That is the same way with buying a truck, I buy trucks by asking dealers for Dodges to give me a bid.

M: WE HAVE ADDRESSED A FEW OF THE POTENTIAL BENEFITS AND DRAWBACKS. WE KNOW SOME OF THE ISSUES THAT ARE POSITIVE AND SOME THAT ARE NOT. WHAT ARE YOUR EXPECTATIONS AND BEHAVIORS COME 1999, WHAT ARE YOU GOING TO BE DOING? THEN ON 1-10 SCALE - HIGHER NUMBER ARE THINGS THAT ARE REALLY POLLUTANTS, LOWER ARE LESS POLLUTING. ON SCALE, WHERE DOES YOUR INDUSTRY FALL? THEN PUT WHAT INDUSTRIES POLLUTE MORE AND WHICH POLLUTE LESS.

EXPECTED BEHAVIOR?

The expected behavior is that we are going to have to follow the law, what is expected of us. There is not much bit in it. Even though I work for a government agency, I am still a taxpayer and whatever goes, you have to go with it. There is not much you can do about it. We are not going to close our doors, we can't close our doors. Too many thousands of acres out there of public land, we can't close our doors, we have to maintain them.

I have decided that in 1999, I am going to retire and get social security and then give my business to my kids and let them fight the government, EPA, workman's comp and all the rest of them. And then I will only work by myself, 3 days a week, Tuesday, Wednesday and Thursday and take Friday, Saturday, Sunday and Monday off. (RECOMMENDATIONS TO YOUR KIDS?) Buy a lot of gasoline.

Basically, it is coming and a little guy like us can't stop it. So we have to keep the rest of what is coming out and, if possible and feasible, start buying now so we

have a couple of years to start slowly doing that transition instead of in '99 we are forced to. So we are prepared for the change when it comes.

I think the tree industry will be doing pretty much the same sort of thing. The equipment comes along, we use what is on the shelf. I just hope to heck that the lawmakers and the manufacturers can get together on the transition and we don't have a gigantic hiccup. But I think we are going to see different ways of cutting things as days go on. I do know that there has been some experimentation with some razors for cutting wood and that could some day get into trees. Making things light out of a different metals and composites and that kinds of things is going to be in the forefront. And of course save on pollution at the same time.

A wait and see attitude. Things are going to change even as we are talking right now. If they don't then we will go out and do what we have to, but I think things are going to change, there are going to be more alternatives, more options and more exceptions.

M: WHERE DOES THE 2 CYCLE, HAND HELD EQUIP. STACK UP IN TERMS OF POLLUTING THE AIR?

I say 2.5. Pretty darn low.
I said 2 1/2.
3, 2, 6.

M: WHY ARE MOST OF YOU DOWN LOW?

Because I don't think that we are a big part of the pollution problem. I think we are part of it but I don't think that we are a big part.

I think we are a really small part. I think automobiles and manufacturing is a lot larger than we are.

Automobiles are at 7 1/2 and trucks are at 8 1/2 for me.

M: WHAT ELSE WERE HIGHER?

Factories, Industry.

Wood fuel users, high. Smoke stack industry, high. Manufactures I put 9 1/2. I put autos at 8. Chemical companies at 8. Construction industry at 5.

Cars, trucks and factories, 7,8 and 10.

I also put pickups and trucks at 10 and buses. And you said to rate our own company and I put us at 10, we contribute heavily.

M: THE AIR RESOURCES BOARD IS FOCUSING IN ON THE 2 CYCLE ENGINES BECAUSE THEY HAVE ALREADY FOCUSED ON THE OTHER AREA. SHOULD THEY FOCUS ON THOSE AREAS STILL TO MAKE THEM MORE STRINGENT OR WHAT?

I would say if they would sit down, I don't know where we are at on the scale, the 2 cycle engines, but if they did a 90% change of us, how much would that drop if they did a 1% on autos?

It is very easy to sit around and make all the rules in the world if you don't enforce them. If they are not out there breaking down and spending half the time that they spend on enforcing the rules and enforcing fines on factories and everything else, the other polluters as they do....now we said the rules, Ok it is fixed, and then they move on. If it is broken, let the government fix it because they can fix anything. It is not the way to do it, because they make rules and then they move on. All they are is rule makers, they are not enforcers.

I think that why they are attacking the 2 cycle engines, weedeaters, blowers, hedge trimmers is because of the high decibels. It is not smoke or pollutants that way, but I think it is noise pollution that they are going after.

M: WHO AGREES THAT IT IS NOISE AND NOT AIR? NOBODY?

Are you saying that because they make noise, it makes them more visible and noticeable and so the lawmakers say, ahah, here is an industry....

First of all, you take the blower. The blower puts out maybe a small amount of smoke from the 2 cycle, the oil and the gas burning, minute. But that pitch catches everybody's attention, catches that ear. Take the weedeater, sit back and watch a guy, that thing is wide open, he has that trigger squeezed all the way and you really don't need it. The blower, the same way. They have it all open up it is blowing 200 miles of air. People pick up on it, then they start complaining, then we have the city ordinance that you can't start before 7:00 in the morning or whatever, 8:00 Saturday. But they are picking on one piece of equipment and they are working at it. In Beverly Hills, they got rid of it. And you know that it is coming this way.

I think it is on the visibility, not necessarily on the loudness side but there are more people who see the blowers and the mowers and things every single day because that is where they are. If more people live right next to factories, there would be more of an outcry to get those factories taken care of. Go to West Orange, New Jersey, where I use to live, and they wouldn't care if you were using hand blowers right in an enclosed area. You can't tell the difference because there are too many darn factories there. It is just a matter of where people are and what their outcry is.

CONCLUSION

ARB 2 CYCLE/RESIDENTIAL
3/25/97 8:00pm
RJR 97-368

INTRODUCTIONS

M: GAS POWERED, HAND HELD EQUIPMENT, HOW MANY OF THESE TYPES OF EQUIPMENT DO YOU HAVE, HOW OFTEN DO YOU USE IT, PROBLEMS WITH IT?

Weedeater, I don't know the name of it. That is it. I use it at least once a week. Just me, I am the gardener. I've had it about 4 years. I like the gas versus electric. One thing is that you don't have that cord dragging everywhere and another thing is that they are easier to repair than the electric ones. I know people that will repair that faster than they will the electric. I have friends that do repairs and they won't deal with the electric but they will deal with the gas. They are easier. (PROBLEMS?) I haven't had any problems.

I have a weedwacker, the brand is Weedeater. I bought it about 5 years ago at Price Club. I think it is an awesome piece of equipment. I am the only one that uses it, I use it probably once every 10 days or so. I had an electric weedeater at one time and it kept going out. And as she said, the electric cord dragging all around. So I like the versatility of the hand held gasoline. One of the things that frustrates me is that I have a large corner lot and I have big weeds. And it is very confusing as to the diameter of the line that we use. Such as O50 and there is O80. If you go to Ace Hardware or Century Lumberjack and it is really confusing as to the size line that you should use that is adequate for that piece of equipment. If you go too small, it keeps whacking off, if you go too big it will burn it our on you. All in all, I think it is a great piece of equipment and I enjoy using it, because weeds go to heaven. I like weeds to go to heaven.

I have a 9 year old Ico, bought it at Kmart. I had burned up two electric weedeaters, got a small one and then I got the larger one. It lasted about 3 years at the most. Last week I went to fire it up, it was jammed, the gas job. Can't pull it. So the manager of the trailer park we live in is pretty good mechanic and he said it is a possibility the motor is locked. He has another motor that he put in and he saved all that stuff. But I love the gas, I have an electric blower right now and I wish I didn't get it. It burned out, not even a season. I've got a 12 wide and about 70 in length and 10 wide and I burned that blower out. Not worth it.

I have weedeater and after about 2 years, my dad bought it at the auction. It is gas powered. It works pretty well most of the time. I had it repaired about 3 times already though. And the most problem I have with the weedeater is the manifold is real close to your arm. If you move too much at an angle, it will burn your arm, put a nice little scar on your arm from that exhaust. Right now it is broke. I won't fix it, I'm going to buy another one. Find something that is a little less painful than that one. (WHAT ELSE?) Black and Decker edge trimmer to trim my bushes, electric and it works perfect. The only inconvenience is dragging that cord around. I think it is worth it, but I would rather have a gas powered one. Open the garage up, get the cord, drag the cord out there and then if you get going good, it will fall out once in a while.

I had an electric hedger and I cut 2 or 3 cords with that thing. You get really busy and you are not paying attention, you could really easily cut cords.

I have a chain saw and a weedeater. I have an electric one but it is battery, I don't have a cord with it. Actually, with the chain saw, I would never use an electric chain saw. It is not big. Electric is a small piece of equipment, it is for light jobs, quick jobs. I use my weedeater, if I am going for a big job, I take the gas. If it is a quick, easy job, the electric. Because there is no power in electric and it doesn't last that long. (BIG VERSUS EASY JOB?) If I am going to go into a field and weedeat a field, I am going to take the gas. If it is just a quick, little thing around the house, I will use the battery powered. (USE MORE OFTEN?) Probably the gas powered one. I use them both about once a week. I use the battery powered one probably around the household. When I use the gas, it is for a longer period of time, for an hour and half or so. Whereas the battery one maybe 20 minutes, 15 minutes.

By the same token, you might have a little electric chain saw and I have 14 fruit trees in my backyard, I am on a corner lot and I have pomegranates, figs, apricots, plums, peaches. I bought this little electric 12" chain saw at Home Base or Home Depot probably 5 years ago. And you just basically do pruning a lot of fruit trees once a year. January, February, which I just finished up and that is nice, because you are only using it for that. I have no other further use for a gas powered chain saw, I am too old to go out and cut my own firewood anymore. So the electric chain saw suffices a need for me once a year for light pruning in my trees in my backyard. I am not a horticulturist, I don't have a tremendous amount of trees, but it is so easy to go out one time. The electric cords, have I cut my cord, way more than once. You get up on a ladder and you are some kind of a configuration, you are trying to get to that one limb. I have cut the electric cords more than once, but it is nice and easy because I don't have to maintain the sparkplug and change the

oil and change the filters and so forth to use just once a year. I put it up on the shelf and put it away and it is great for the next 11 months.

I have 3 pieces of equipment, I have an electric edger-trimmer. That recently has gone out in the past season. It went out and I have taken it apart to see exactly what it was, if it was something easy and I don't know what it is. So, I am seriously considering going to gas on that one. I have a weedeater, the one complaint that I have with the weedeater is that the nylon cord keeps breaking off. So you have to stop and unwrap it, feed it back up thru the feedhole and start all over again. That is gas. And then I just recently got a Craftsman blower. I also live on a corner lot and you have to edge and you have all the debris that goes on the sidewalk. I push the broom around one too many times and the blower is just very nice. It is gas.

Did you try to go to a higher stroke of nylon as I did.

I have a couple of the different sizes like you are saying and I tried a few different ones.

I got more 2 strokes than, I wouldn't know where to begin even. Presently about 8 or 9 of them. But I have all kinds of motorcycles, outboard motors and stuff like that. (WHY HAVE SO MANY?) I don't know. Something about 2 strokes. I am doing a kind of a handyman business for myself and have a few rentals and so forth for a few relatives that are in the real estate business, so I do a lot of yard cleanups. Some of them I do monthly. I get a lot of garden work and a lot of trimming and hauling. I have 2 Echo weedeaters, rather large, gas 2 strokers that use the real heavy red cord and I have never had one of those bog down yet. It picks up rocks, sometimes 6 and 8 ounce rocks and chucks them at you if you are not careful. Lawnboy 2 stroke lawnmowers to couple of Homelife chain saws and a larger Echo chain saw. Shitowa pruners, trimmers that I use for hedges. Backpack 2 stroke blowers stuff like that. Just about anything and everything.

M: FEELING AND ATTITUDES TOWARDS AIR POLLUTION IN GENERAL. FIRST DIMENSION -- HOW BIG OF A PROBLEM DOES AIR POLLUTION REPRESENT IN THIS AREA? 1-10 SCALE -- HIGHER NUMBER IS BIG PROBLEM, LOWER NUMBER LESS OF A PROBLEM. SECOND DIMENSION -- HOW CONCERNED ARE YOU, YOURSELF, REGARDING AIR POLLUTION? THIRD DIMENSION -- WHAT KINDS OF EFFORTS HAVE YOU DONE IN THE PAST, INVOLVEMENT YOU HAVE DONE IN TERMS OF HELPING REDUCE AIR POLLUTION?

FIRST DIMENSION - AIR POLLUTION, IS IT A PROBLEM? HOW MANY 8,9,10? - THREE.

Big problem. I lived in LA for a little while and Sacramento is just like LA was when I lived there 18 years ago. It has a valley, mountains and it doesn't go anywhere until you have a nice breeze.

I agree with that and I think airplanes are one of our biggest source of air pollution. They let out a lot of pollution.

You wouldn't have to come down the hill too many times in the afternoon up Placerville way to come down into this valley and do a second take or something like that "Oh my God". It is a mess.

M: THE REST OF YOU DON'T THINK AIR POLLUTION IS A PROBLEM?

Well you said 8,9 or 10 and I had a 7. I think air pollution is becoming a very big problem. Sacramento is all of a sudden a Silicon Valley, we are getting a tremendous amount not only of automobiles with regards to all the residents that are moving over here, but the trucks that are picking up everything that we are building. The rice fields are becoming a very big problem, agricultural burning is becoming a very big problem. I think that we need to be cognizant of that we are coming of age here in the Sacramento Valley and that we need to be very concerned about all aspects of pollution.

"7". I don't think it is as much of a problem as Don said as to LA, but I think it is getting there with the growth of Sacramento.

I have spent most of my life as a trucker and I know the pollution that those things are kicking up. You can see it everyday. And they are doing nothing here to cut the diesel fuel. So they can clean that up somehow, it might cost them, but they can do it.

I was a "5-6" I got in the midrange. We have an awful lot of checks out there, watching the pollution that goes on. And a lot of things that impact this. I am not quite sure how much more I would be willing to give up or what the impact will be on us to reduce it much more. So it is a big problem when you can't breathe and you are choking, but I am giving it a 5-6.

M: SECOND DIMENSION - HOW MUCH OF A CONCERN DO YOU HAVE FOR YOUR SELF. 8,9 10? ONE PERSON. WHAT WERE OTHER NUMBERS? 6,7,6,5,6,6

I have asthma and this does bother me. My breathing bothers me and I am worried about it. I am thinking about moving away from here up to the mountains to get some fresher air than is here in the valley. Like they said, it is all coming down like this into the valley. You can see it if you are up in the air, you can see the brown, it is terrible.

M: AS A GROUP, THERE IS A BELIEF THAT AIR POLLUTION REPRESENTS AN ISSUE AND A PROBLEM BUT MOST ARE LEANING IN BETWEEN? IS THAT CORRECT?

I think it is more of an awareness. We know that it is there, we know that it is a problem. That is my feeling.

I rated it a "5". And I did it because, at my age, I am a creature of conveniences and I am a creature of comfort. Yes I am concerned about it but yet, my weedeater or my gasoline lawnmower suffices a certain amount of comfort, a lesser degree of physical labor for me. So yes, I am concerned, but am I willing to give that up to...

I am concerned about it, the state is doing something about it with smog checks and all that, air pollution watch. I see the news all the time and the folks have their eye on it. So I think they are doing something about it, or trying.

M: LAST DIMENSION. WHOSE HAS MADE AN EFFORT? HOW MANY HIGH NUMBERS? 8,9,10 -- NO ONE.

Mine is not really a real high number, "6". What I was thinking is that I drive less, I have an '89 that I bought new, has 60,000 on it. At home, we don't burn too much stuff, in fact we don't burn anything. That is what I do is try to keep out of that stuff.

M: HOW MANY 1,2,3? -- 4 HANDS UP. HOW MANY "4 OR 5" -- NONE. OTHERS? 6, 7, 3,1,3,2. IF AGREE THAT THERE IS A PROBLEM WITH AIR POLLUTION BUT ON OTHER HAND HAVEN'T DONE THINGS TO IMPROVE IT. HOW COME?

You said be honest. Most people don't. I recycle now and I didn't use to. I take the bus when I can, that is helping the pollution. I am not driving my car out there when there is a car and a bus. I feel like I am doing something by taking the bus. That means there is one less car there. I am not saying that I always do, but I do when I can. Therefore I might take the light rail or I do something else. I am trying to make that effort, I am not making a total effort. I am not an 8 or 9.

M: I AM GOING TO PRESENT PART OF AN IDEA. WHO IS FAMILIAR WITH CALIFORNIA AIR RESOURCES BOARD? ALL EXCEPT 2. CARB HAS PROPOSED EMISSION STANDARDS FOR HAND HELD LAWN AND GARDEN EQUIPMENT EFFECTIVE IN 1999. OUTCOME WILL BE THAT THERE WILL BE OTHER TYPE OF EQUIPMENT OPTIONS AVAILABLE THAT MEET THESE STANDARDS. REACTIONS?

What do they expect us to do with all the equipment that we have?

Smog it or what?

It sounds like they will be writing a lot of tickets, I think.

I think it is a crock. I think it is a big crock because big industry is allowed to trade, sell and buy pollution credits. I don't know how many people in this room are aware of it but big business, large industries in the State of California that are polluters that cannot get their pollution levels down are allowed to go out and buy pollution credits from companies or organizations or factories that don't have such high pollution emissions. So it is a trade off to big business and we, as the little guy now, are going to be subjected to laws, rules and regulations in our backyard. Was it in Los Angeles right now, barbecues for crying out loud. We have no control over our personal lives where big business can trade dollars and trade credits to suffice the needs to make them profitable. Where all we want to do is cut our damn grass and trim our hedges.

I can see that we have heard about it and this is how the big bureaucracy rolls and I agree that they are coming down on the little guy rather than going after the big polluters. Like we said, the agricultural burns that go on, that is why a lot of us are reluctant to put a major effort in to try to curb our day to day activities when you can see that there is so much pollution going on. You drive by any of the refineries, the rice fields burning. It is just difficult to forego any of the conveniences when you see such major pollution going on and you know that you put in such a small effort, a small amount. So I do see them coming after the incidentals, but it is a bureaucracy that is pointing down to us and they can show improvement by these models that they are going to put on the store shelf. And they may pollute less or they may not. I just know that it depends on how much oil you put in your mix.

I will really be affected by it. I just have a few...my weedeater and my chain saw. I could buy another one.

Maybe big business might buy that one from you with a pollution credit, give you enough money to go and buy yourself another.

Great, government getting into something else that they can't handle. Negative. Government can't do anything. The bureaucracy that is unable to communicate with each other and now they are going to make a rule here that somebody else over here in government thinks is stupid and they aren't going to pay attention to it.

Certainly they couldn't allow the sale of all of these 2 stroke and all this equipment, knowing that in 1999...why isn't that advertised or publicized to the public that they should have some kind of set ruling and some type of a warning time.

It is like the jet skis, to go one step further, which is not hand held, but it is still 2 stroke. The jet skis, they are talking about doing away with those on Lake Tahoe, that is what I have heard on the news the other day. But it will start here, but it may or may not impact you in the garage but it may take your boat or your jet ski.

M: THINGS THAT POLLUTE, CAUSE AIR POLLUTION - HIGHER NUMBER SAYS THAT IT REALLY CAUSES AIR POLLUTION DOWN TO 1 THAT SAYS IT HARDLY POLLUTES. WHERE DO YOU THINK 2 CYCLE, 2 STROKE GAS POWERED HAND HELD LAWN AND GARDEN EQUIPMENT STACKS UP ON THIS SCALE. NOW WRITE WHAT THINGS POLLUTE MORE AND WHAT POLLUTE LESS.

WHERE DOES 2 CYCLES FIT ON THIS SCALE? 2,3,8

I read that a lawnmower puts out the same amount as 20 cars idling or something like that. I put a "2".

I don't think so, I put a "2". I think it is relatively low. As compared to the next phase that you are going to ask us about. I think it is very low.

"2".
"4".

M: WHAT IS HIGHER?

An airplane.
Big rigs
Cars.

I put cars, planes were an "8", industry at "7" and the ag industry at "6" because of the burning.

Wood burning stoves, fireplaces, woodburners all higher.

I put agricultural burning down as a "2". That is only once a year.

M: WITHOUT KNOWING ANY MORE INFORMATION, WHAT DO YOU THINK WILL HAPPEN IN 1999 WHEN KINDS OF PRODUCTS YOU ARE USING ARE NO LONGER ON THE SHELVES?

Black market.

Non-compliance. I am not giving mine up so I am going to be in non-compliance with whatever law or ordinance is in 1999 comes around.

You are going to have a bunch of equipment that is not running as well as it is now that people are still going to use.

You are going to have a lot more cops out there in 1999? I don't think so.

I will use mine until they burn out.

I am going to keep mine going. One thing that I do wish, 25 or 30 years ago, Texas all their city pickups were using butane and it makes a lot less pollution.

M: MORE INFORMATION. THERE IS POTENTIAL TECHNOLOGY THAT WILL BE AVAILABLE IN 1999 THAT WILL MEET THE NEW STANDARDS. MAYBE A 4 STROKE, GAS ENGINE WITH CATALYTIC CONV. OR A 2 STROKE GAS WITH CAT. CONV. OR MAYBE SOME OTHER OPTIONS.

I don't know what a catalytic converter is.

M: WHO KNOW WHAT THAT IS? THREE OR FOUR OF YOU. IT IS A MEANS OR WAY OF REDUCING EMISSIONS.

Like a smog control.

But there is also a bad side to catalytic converters.

M: POSITIVE COMMENTS FIRST.

Is it going to work as good as the old ones? I don't know.

Whoever has it is going to make a lot of money.

If it is going to help emissions, then it might be good.

The environmentalist are going to love it. The Sierra Club is going to...it is going to be on the new for months and months and they will go out and buy them. Of course, they don't work for a living, they live off of us, that is a positive.

I am just halfway convinced. Nobody likes to change too much. Evidently I am not all that hip to it.

I am a skeptic. I think that they came up with a solution and found a problem that it answers so that they can make a lot of money off of it. You can draw on the statistics will show that it may be polluting less, but overall, it could be polluting more. Like this new gas, they are saying that it pollutes less at the tailpipe, but you have to burn more of it to get the same distance.

I think they are taking a bandaid approach to it because they really don't know. We keep talking about the greenhouse effect and the hole in the ozone layer. If you talk to 100 scientists, 50 are going to say one thing positive and 50 are going to say negative. I think they are looking at a bandaid approach to appease the masses in the state that we are doing something. It is a bureaucracy and what they are attempting to do is appease the masses. By golly, we are going to do something in 1999 by cutting the pollution from weedeaters and lawnmowers.

Just like freon. They banned it, everyone had to go out and buy these new air-conditioning units that use something else.

That makes it more expensive to the consumer.

M: ATTRIBUTES OR CHARACTERISTICS OF THIS NEW TECHNOLOGY -- 1-10 HOW MOTIVATING IS IT. HIGHER NUMBER VERY MOTIVATED, LOWER NUMBER NOT MOTIVATING.

THESE NEW HAND HELD EQUIPMENT WILL PROBABLY USE LESS FUEL. HOW MANY HIGH NUMBERS 8,9,10 - 3 HANDS. WHY?

Because you are going to save money, assuming that the fuel is the same price. And if the whole point is that it is going to be less polluting, then it is obviously

more efficient because you are getting better gas economy out of it and you are not polluting. So it is a win-win.

Less dependence on foreign oil. I am red-neck American and that is important to me.

"8". Uses less fuel. With the price of gas, it sounds good to me.

I went "5". I am not sure, I am right in the middle. I have watched over the years, like when they got this new gas in here now, I lost over 5 miles per gallon, I only have a 4 cylinder engine and my motor is just barely broke in. I lost 5 miles per gallon on this new gas.

Oxygenated fuel.

"5". I think about this new gasoline that we have out, this emissions gasoline and it is not really all that it is cracked up to be. So I am still a little bit skeptical on this. I am not sure.

I gave it "5". Even with the amount of 2 strokes that I use, and I use quite a few of them, it only seems to be about a $20 or $30 a year savings at most. It wasn't a real heavy concern. That is why I had so much trouble believing that the 2 strokes can be such a pollution problem. You get a gallon of gas and it runs them forever.

M: JOT DOWN A DOLLAR SAVINGS THAT WILL BE A MOTIVATOR OVER THE LIFE OF THE RESPECTIVE UNIT. IF I COULD SAVE X AMOUNT OF DOLLARS.

Motivate you to turn in the old one and get a new one? I am not going to get rid of the old one.

M: ANOTHER FEATURE FOR 4 STROKE GAS POWERED. HAVING A 4 STROKE GAS POWERED PIECE OF EQUIPMENT WILL ELIMINATE THE PROCEDURE OF HAVING TO MIX THE GAS AND THE OIL. MOTIVATING? WHAT NUMBERS?

I gave it a "7". I think it is. The mixing the gas and the oil and all that is more pollution, it is to me.

I think it is too. It depends on how much oil and gas...if you are dumping in that much.

But from a cost stand point of view, costs to repair a 4 cylinder versus a 2 stroker.

I put "7", I do think that it is a motivator to me.

Doesn't bother me. I buy the little things of oil, pour it into a gallon of gas.

"8". It is motivating. I don't have to run around and buy the mix and buy the gas, mix it. Buy a gallon of gas and pour it in there.

"7". It sounds better, a little bit, it is getting there. I would like to see a lot of this pollution out, I would like to see better mileage at the same time.

M: ANOTHER CHARACTERISTIC. INTRODUCTION OF THE NEW TECHNOLOGY WILL HAVE A REDUCTION OF EMISSIONS, WHICH WILL MEAN LESS POLLUTION. 60-80% LESS POLLUTION IN 1999 MODELS. MOTIVATING? HIGH NUMBERS - 8,9,10 - ALL EXCEPT 1 PERSON. WHY IS THIS MOTIVATING?

It makes sense. Mine is 4 years old and something that you buy with less emissions is going to be a good thing. I am sucking in this air and I have asthma. So it is going to be better for me.

I had a "9". There is no question that something needs to be done about it. I am not sure that 2 strokes are totally responsible.....

(CHANGE OF TAPE)

I voted high on that just for future generations and so forth, air quality. You can't keep going at this rate.

I agree with that.

I went high. If they can make that kind of improvement, I find that kind of exciting.

If it was fact rather than fiction, I would be very positive to it. I don't trust that the numbers that they are crunching based on what they want them to be rather than what in reality they really are. If the engine people, the people that I am buying my product from can come up with these numbers and say that is true, then I am for that 100%. If the bureaucracy comes up with those numbers, then I don't trust them. It is proven.

We are all just about as skeptical as we can be at this point.

"9". Motivate me to look into it more. If it is that much, 60% is a lot.

M: SOME OF YOU SAID EARLIER THAT YOU HAVEN'T DONE MUCH RE POLLUTION BUT NOW YOU SAY THIS IS MOTIVATING.

You have to look at how many are out there. There is hundreds of thousands of those things out there and if they are all going at one time, that will put a lot of pollution in the air. You start thinking about, yeah, that makes sense.

You did a flip side. You said how receptive would we be to the 1999 proposal. In essence, you are not giving us any choice at that point in time. I am sitting here in March, 1997 and you are saying how do I feel, is it a problem, am I concerned, am I doing anything about it. No because I am taking a passive attitude toward. But then you flipped it 180 degrees and said based on what is going to happen or propose to happen in 1999, how do you feel about it. Now I have to go back and say I don't have any choice in 1999, I have a choice in 1997 and that is how I felt when we started this whole thing. Now you are saying in 1999 how will I feel about it. Given the lesser of the evils, it is going to use less fuel - I give it a "7". 4 cylinder vs 2 cycle- I give it a "3" because it is going to cost me more to repair it. 1999 standards vs 1998 - less pollution I gave it "8". So I am very positive about what you are telling me is going to happen in 1999.

I have a "6" for my concern and I have a "6" on the motivating factor. What is motivating for me is my pocketbook. If you tell me that it is going to be cheaper to run.

Low impact kind of a feel good. It is politically correct, if you can go out and get better gas mileage or better fuel economy out of it, less pollution. If you are in the store buying one anyway, you should. It is easy to buy, I will go for that. It is a low impact purchase. So it is easy to feel good. It is not like milk and bread, we don't buy it every week, do we? (LOW IMPACT PURCHASE?) I mean you don't have to give anything up. You are still getting the piece of equipment that you want and it doesn't pollute and it gets better gas efficiency. So I can see where we are feeling good about it.

I have to go and take my 2 stroke chain saw and get rid of it because of the new technology. I will wait until it burns out and then I have to go and replace it. Or somebody makes me do it.

The whole thing with the difference between the 2 stroke and the 4 stroke is the weight of it to begin with. The amount of horsepower on it, the job it will do per weight category is how they judge and read a lot of these. I can't foresee a Harley Davidson chain saw or something like that.

How is it going to hold up? How the equipment is going to hold up too. For the price. Like I have had this thing for 4 years and I haven't had very little trouble out of it. And I am thinking about buying other tools that are that way, but I want to make sure that this thing is going to last a while. I don't want it to fall apart in 6 months like these electric things are doing.

M: ANOTHER FEATURE. THE AIR RESOURCES BOARD WILL BE REQUIRING THE MANUFACTURERS OF THESE PRODUCTS TO REPAIR MALFUNCTIONING ENGINES. WARRANTY FOR BETWEEN 2 OR UP TO 5 YEARS ON THE ENGINE. MOTIVATING?

How would you know that it is operating? Would you bring it in and have it checked? Or is it something that at some point in time someone will be driving by and decide that it is not operating correctly and the Air Resources Board emblem on the side of his car and he gets our and says here, go get this checked. What are you talking about here?

Are you talking about a warranty or if you have a problem with it you take it in and you say I am having trouble getting it started.

I think that is the biggest piece of sales crock in the world. You buy a new car to last 10 years and you take it in and the warranty work and they will say subsection A paragraph 13 line 27, this is not covered because of...I think that is a sales crock somebody is selling somebody. (YOU ARE A SKEPTIC?) Absolutely.

A warranty is great when it is new. But when you buy a piece of equipment like this, you expect to get 5 year, 9 years. Are they going to make a warranty for 9 years? No that is why you have cars going down the freeway belching smoke. People driving those cars know that that is not right, it is not suppose to be like that. But it is out of warranty and they are going to drive it anyway until...

I gave it "9".

M: HOW MANY HIGH NUMBERS 9, 9, 7..

If I am going to get a 2 - 6 year, well 6 year is good warranty on this thing. By the way, I have had a warranty on washers and dryers and I have had no problems

getting them fixed or anything else. Now I know that there are people in here that may have had problems, but I haven't had any with the warranty before.

M: THERE WERE LOW NUMBERS IN HERE, WHY WASN'T THIS A MOTIVATING FEATURE?

"7". My experience with warranties is that it is usually how long the equipment is suppose to last. A 3 year warranty and it goes dead in 3 years, 1 month something like that. That puppy is going to die on me for sure.

"9". That is pretty convenient if you have a 5 year warranty on it and you break the cord or anything blows up you can take it back.

The Air Resources Board is implementing a warranty on, I am assuming, the smog end of it. Not talking about cords breaking. We are talking about the Air Resources Board bureaucracy...

We are talking about the equipment manufacturer's warranty here. That is the way that I see it. The manufacturer of the equipment will have some kind of a warranty.

And so the Air Resources Board is forcing a warranty on the product?

M: THE ARB WILL REQ. THE MANUF. TO REPAIR PRODUCTS THAT THE ENGINE PART OF THE UNIT MALFUNCTIONS BECAUSE IF IT DOES, IT WON'T BE MEETING THE EMISSION STANDARDS. 1999.

You have to understand that if a bureaucracy requires and stipulates that a manufacturer do certain things, that manufacturer has to put a pencil to it. It is called the bottom line, stockholders, it's called profitability. Ultimately who is going to pay for what some air resource nerd, sitting in some room is dictating to the manufacturer of a lawnmower or chain saw. We, bottom line, are going to have to pay for that. The manufacturer is not out to appease and please the Air Resources Board, they are out to make a buck.

M: TWO MORE FEATURES WITH A DIFFERENT SCALE. HOW MUCH OF A BARRIER IS THIS FEATURE. HIGHER NUMBER IS A MAJOR BARRIER, LOWER NUMBER NOT A BARRIER.

NEW EQUIPMENT IS EXPECTED TO BE HEAVIER. MAYBE ON A TRIMMER IT WOULD BE 1 OR 2 POUNDS HEAVIER. IF 20 POUND PIECE OF EQUIPMENT MIGHT BE 2 OR 3 POUNDS HEAVIER. IS THAT A

BARRIER? HOW MANY LOWER NUMBERS 1,2,3? ONE PERSON. HIGH NUMBERS 8,9,10? NO ONE. THE REST ARE IN-BETWEEN 5,6,7,5,6,6,8

"7" I am a woman and things are heavy enough for me out there and I work the yard a lot. But my muscles aren't what a man's muscles are. (TRIMMER ONE POUND MORE-PROBLEM?) No, but you are saying up to 2 pounds. (WHAT DOES YOUR TRIMMER WEIGH NOW?) I don't know. I don't know if it would be a problem or not.

"6". I am not getting any younger. Everytime I get that puppy up it doesn't get any lighter. It would have a little bit of bearing.

"5". It doesn't have...either way, 10% isn't anything great.

"6". Because I don't know if there would be a problem for a weedeater, but a trimmer, I use...

Yes, suppose that I bought a trimmer and then it would be harder for me to lift it and move it. Because the electric ones are not that heavy, except that I cut the cords off, but they are not as heavy.

"6". I figure just a little added weight to the equipment won't hurt me right now. Later on in the future, it will but right now it won't. The only thing that I have is a leaf blower.

The chain saws and the hedge trimmers and stuff like that you more or less buy and you are paying an extra amount of money for that more light weight, more productive piece of equipment. Performance and weight.

"8". I am 56 years old and I have some physical disabilities, some limitations and added weight will probably prolong the amount of time it will take me to do the job so, consequently, the savings and the less pollution involved is going to take me longer because I fatigue easier and I am older and I can't go all at one time. I think that would pose a problem for me ultimately. Not quite as much now but say, 4 years from now when I am 60 years old and my physical disabilities start to hamper me more. That is my concern there with the weight.

M: ANOTHER CHARACTERISTIC. THE NEW EQUIPMENT THAT WILL BE AVAILABLE IS EXPECTED TO COST ABOUT $35 MORE THAN THE COMPARABLE 2 STROKE VERSIONS THAT ARE AVAILABLE RIGHT NOW. BARRIER? WILL BE A BARRIER - 2 PEOPLE. WILL NOT BE A

BARRIER - 3 HANDS UP. LET ME HEAR FROM THOSE WITH NO BARRIER.

"3". $35 is not that much more to pay if it is going to do all that you say that it is going to do. I am not going out and doing the kind of work that these guys are going to do. I am going out in my own yard, I am not going to buy more than 2 or 3 pieces of equipment for my yard.

I gave it a "4" for a reason.

It is not a barrier to me because like I said, I have a very small yard and the price difference won't matter. If I have to replace it, then I will have to replace it.

M: WHY THE NUMBER IN BETWEEN?

Not an issue. $35 isn't an issue. It is a one time purchase, pretty much for 4 or 5 years. You are talking about a 4 or 5 year warranty on it, better efficiency. $35 isn't that big of a deal.

I don't think it is that big of a deal either.

I put a pencil to it. 5 years, $35., $7.50 a year. It is not significant.

It is more of a barrier for me, not so much the $35 is a lot of money or anything, but it is just the principle of the thing. I already paid more money for something that performs less service, more of a burden. It has to be heavier, I don't think that it can perform like the 2 stroke, depending upon the tool. I gave it an "8".

You are asking me to pay more for something that hasn't proven itself. If you want to capture the market, come in from the bottom. (HASN'T PROVEN ITSELF?) Give me a 5 year warranty, 10 year warranty for what? What are you going to give me to tell me that this cools better than my 2 stroke, you are going to save me money in gas, you are going to cut my emissions. Who is going to promise all that?

M: SCENARIO - THIS $35 IS TOP END ADDED PRICE, COULD BE LESS AND OVER YEAR OR SO MAY NOT EVEN BE PRESENT. DOES THAT CHANGE YOUR POINT OF VIEW?

Yes.

As long as that is what is being sold on the market, you are still going to be able to pick them up at Price Club, the different discount houses, sales are going to go on.

The price is going to vary. Demand and competitive activity will determine what the price ultimately is going to be on any piece of equipment. And if it is a better mousetrap, of course, there is gong to be a lot of competitive activity, there are going to be a lot of innovations and I think we will all buy more of them, basically because of that.

M: EACH MANUFACTURER OF THIS EQUIPMENT MIGHT BE TOLD BY THE ARB THAT YOU CAN CORPORATE AVERAGE, IF YOU HAVE CURRENT EQUIPMENT THAT EMITS 30 ON SCALE, THE NEW EQUIPMENT CAN EMIT 10 AND THE CURRENT STANDARD IS 20. THE ARB SAYS YOU CAN SELL SOME OF EACH AS LONG AS YOU AVERAGE 20.

It is more competitive, it is more democratic. Cars have to average 26 miles per gallon, maybe they have some 12 gas hogs and they have some 40 mpg econo cars, but as long as they average that. And of course, next year it is going to be 24 then 22. They are reducing them all the time.

I don't know, I just didn't get it. I didn't get it at all.

M: EXPLANATION OF AVERAGING.

Then that is right there in the middle, you are still going to meet it, right at a 20.

Makes me think that what they are going to try to sell us is an inferior product. Why would anyone what to buy something that pollutes more when it is the same product that pollutes less. The inferior one more likely is the one with the lower emissions. For the same reason that they are inferior in cars.

They have had to alter them to make them in compliance.

M: INFERIOR IN WHAT REGARD?

I don't think that they will last as long, they probably won't have as much power. They aren't going to have as much power and I don't think they will last as long.

I agree.

The ones with the less emissions will be inferior quality and the power is just not going to be there.

If you have a superior product, why do you want to keep making the old one that produces more emissions?

Simplicity of product. They are going to have to do something to this piece of equipment to make it in compliance with less emissions. They are going to have to alter or add to or modify something that is running very good right now. That obviously is a problem with regards to maintenance, adjustment, efficiency. It is just like the cars with emissions controls. Look at the 1965 Mustang and look at a 1995 Mustang and look at the amount of equipment to keep it in compliance for emissions control. They cannot efficiently run as good, high performance as well, mileage as well as they did in 1965. Why because of everything they have had to do to be in compliance with emissions control. Same thing would be with 2 stroke engines.

That is the way that I was thinking. The more equipment that you have to put on your machines, the less you are going to get out of it, it won't hold up as long, it wears them out faster.

This offer of pollution averaging really confuses the issue. So far we have been talking about cars, but it is different if you are buying a large van with the large engine in it as compared to a little 2 seater in a Geo or something. If you are looking at a weedeater and a weedeater, pretty much the same box, same make, same everything, one pollutes more than the other, it confuses the issue that they would run two lines of products. Why?

If one is just as good as the other, why do you have two?

I don't see why they would even offer the ad. I could see that there would be a lead time in, OK, to replenish your stocks you can go ahead and do this for a 1 year period or a 6 month period. But it confuses the issue a lot.

M: YOU KNOW ALL THAT COULD HAPPEN IN 1999. WHAT WILL YOU BE DOING IN 1999.

REMAINING SEVERAL MINUTES OF THIS GROUP DISCUSSION WAS NOT AUDIO TAPED.

ARB 2 CYCLE/RESIDENTIAL
3/26/97 6:00pm
RJR 97-368

INTRODUCTIONS

M: I WANT TO GO AROUND THE ROOM AND LET ME KNOW WHAT TYPE OF 2 CYCLE POWER TOOLS YOU HAVE, HOW MANY AND WHO USES THEM, HOW OFTEN....

I have a weed eater, infrequent use of that, every six months. I have a leaf blower approximately use that twice a month. I am the only one that uses that. The weed eater, probably use that twice a year or three times, yes, I am the only one. (WHEN DID YOU BUY THIS?) It has been over four years or five years on both items.

I have a power edger, which I use weekly during the season and I am the only one that uses it. I can't talk my son into using it. I bought it a few years ago.

I have a weedeater, I have two of them. They are broken now, I broke them this summer. I have a very big yard, so there are three of us that use them, my son, my husband and I and we have a chain saw that we just purchased this winter. He is the only one that uses that, it is too heavy for me, not for my son and my husband. And the rototiller, I think it is also included in that. (IS THAT A TWO STROKE ENGINE?) I am not sure.

How big is it? Is it a large one?

It is large. It is probably not. (HOW ABOUT THE TWO THAT ARE BROKEN. WILL THEY GET FIXED?) No I am going to get a new one, because I broke it. (PURCHASED ANY IN THE LAST SEVERAL YEARS?) The chain saw, I went to get that so my husband can cut the trees down. I figured if I go and buy it and I start it and I can't finish, he will do it.

I have 2 chain saws and a weed eater. The chain saws get used 3 or 4 times a week. The weedeater gets used about once a month. My chain saw I bought about 3 years ago and the other one I have had for about 6 years. I do foundations and stuff and the chain saws seem to be the easiest thing to use on them. Set forms for the foundations. It is a lot easier to use chain saws.

Weedeater, every couple of weeks. The whole family gets at it, my 15 year old is out there sizing it up for a skate board the other day. Probably going to buy a new one next year or this year. (WHY?) More power.

M: ANY ONE HAVE ANY ELECTRIC THAT YOU USE?

Yes. I have an electric hedge trimmer. That is infrequent, six months or so. No just the hedge trimmer.

I have a leaf blower that is electric. Then the usual power tools, the electric saw, saber saw.

One of the weedeaters was electric. The first one that I broke. I have a tendency to use it where I am not suppose to use it. I get in there and then I break it.

I have an electric weedeater and a hedge trimmer. Just the one weedeater. All gas.

I have an electric weedeater, as of last year I had two power weedeaters. They were gifts. I have a two-cycle blower, Toro. I have a large chain saw. My dad has a big place and my dad is elderly, so I do his yard. Like a kid you have to use your hands. My son helps me, so we trim two yards, so I definitely use it a lot. The blower, I probably use once a week for leaves and stuff that blow from the trees and up the patio area. (DID YOU NEED TWO NEW ONES). No, one was new and one was used. And it is dismantled and hopefully I can fix it. That is the reason that I have it, they trashed it and I said let me try to fix it. That is about it. I have power tools too.

Do mowers count. (ARE THEY 2 STROKE?) I don't know.

If you have to add oil to it, then it is 2.

Then it is a 4. Gas-wise, I have a weedeater and a lawn edger and I just sold a chain saw, I was trying to make a list. Electrical, I also have a weedeater and a hedge trimmer and a lawn edger. I have a power edger and an electric edger both for a gift, for the same occasion. I frequently use the power one and my wife doesn't mind using the electric one. She doesn't like the exhaust and having to start it and all that. I don't know. She just likes to plug it in and turn it on and go. I guess we are going to have to accept that.

M: JOT DOWN ON PAPER -- ARE YOU FAMILIAR WITH 1-10 SCALES? HIGHER NUMBER IS POSITIVE AND LOWER NUMBER IS THE OPPOSITE.

I WANT YOU TO THINK GENERALLY ABOUT YOUR ATTITUDES TOWARDS AIR POLLUTION. NOT IN THE WORLD, PER SE, BUT IN YOUR AREA, LOCATION. 3 THINGS TO REACT TO AND I WANT YOU TO PICK A NUMBER. FIRST IS HOW MUCH DO YOU PERCEIVE THE PROBLEM OF AIR POLLUTION TO BE IN YOUR SITUATION? IS IT A VERY BIG PROBLEM, YOU WOULD GIVE IT A HIGHER NUMBER, 8, 9, 10. A 10 WOULD BE A BIG, BIG PROBLEM. THE LOWER YOU GO, THE LESS OF A PROBLEM. A 1 OR 2 SAYS THAT THIS ISN'T A PROBLEM AT ALL. AIR POLLUTION. SECOND NUMBER I NEED IS FROM YOUR PERSPECTIVE, HOW CONCERNED ARE YOU, YOURSELF. THIRD THING HERE IS HOW INVOLVED HAVE YOU BEEN, WHAT TYPE OF EFFORT HAVE YOU MADE IN TERMS OF IMPROVING AIR POLLUTION.

FIRST - HOW BIG OF A PROBLEM IS AIR POLLUTION. HOW MAY FEEL IT IS A BIG PROBLEM IN YOUR AREA? 8, 9, 10? NOBODY. HOW MANY 1,2,3? 1. WERE THERE ANY 7'S? ONE. EVERYONE ELSE WAS IN THE MIDDLE. WHY?

Myself, I run and I have noticed over the last few years that I get a little more dizzy. If I run at 8:30 in the morning, I know that it is the air quality. I know that it is getting worse, it is not getting better. That is why I would say that it is not totally bad. I have ran down in Chino and I almost had to go to the hospital. We are not totally bad, but we need to go in the opposite direction as far as quality of air. I am 5, 6 or so. I think it depends on your health condition. If you have problems breathing, I think certain times of the day and certain times of the seasons, you need to stay in from outside in Sacramento. Not too often, though.

M: WHO IS LEANING TOWARDS THINKING THAT THERE IS A PROBLEM?

I think that he hit it on the head when he was talking about some health issues. I have been in good health all my life until I moved into Sacramento from Virginia, along the coast, lived by the ocean. I had a baseball game and I keeled over, they hauled me away and I had asthma. I never had asthma before but I have it ever since. I have developed allergies since I lived here in this valley. (HOW LONG HAVE YOU BEEN HERE?) 16 years now. I never had any of these problems before. It is a seasonal thing and it relates to the air.

"3". I am not thoroughly concerned. Not a problem. I work in automotive all day long, you would not believe the environmental stuff that I have to breath. I come away from it and, to be honest with you, out here in Sacramento it is not a problem.

I have been to LA and compared to LA, this is great. I just moved back from Salt Lake and this is the middle of the road.

I agree with Tim. I don't think that it is a huge problem in our area, maybe elsewhere. But here essentially... And I think it has improved over the years that I have experienced it.

I think that it has improved a lot, not as much smog. I live in the county, so we are not so much in the city. But I don't see it as bad as it was a couple of years ago. Improving.

I don't see it as improving. I'll say that from a political standpoint, the city is getting bigger, the population is certainly increasing, there is more and more policy being made about carpooling and vanpooling, incentives for employers. These kinds of things. Obviously it is a problem or they wouldn't be into these kinds of things.

They never took care of the problem before and they are starting to. You don't see the factory smoke and stuff.

I think that is one of the reasons why it has improved because of some of the policies.

Yes, but I still think that the problem is outpacing the solution still.

It is still there, but it has improved comparatively.

I agree that it has improved, but I still think that the problem is outpacing the solution.

Mark mentions about the sinus problems. I was born and raised in Sacramento and I think I am older than most people here at this table and Sacramento has always been know that people have allergies and things like this. You go down as far as Fresno and your allergies will clear up and you don't have these problems. But Sacramento has always had a base of allergies and things like this. I feel that our area is getting not as good as it use to be, by a long way. I don't know what the true solution to it is. I don't think that it is vanpooling or anything like that is going to solve our problem. You are not going to take a native California out of his car. No way.

M: SECOND DIMENSION. YOUR CONCERN. HOW MANY VERY CONCERNED, 8, 9, 10? ONE PERSON.

I am concerned about it. I am very concerned. I would hate to have it get like LA. Me, personally, I know that smog check 2, I think that car pooling is important. You look out in the street and you see a bunch of cars and one person in the car. That is a concern. If Sacramento continues to grow as it has, we have to do something. All of these things are very important. I like being outside, but I would hate to not have ozone either. Being outside and people getting skin cancer, those things are real. I haven't had the problem, but I know friends and people that I know who are having problems that they never had before. It has a lot to do with the condition of the air that we breathe.

I am on the high side. I think that part of it is that I am concerned about my kids growing up. Keith made a comment that he was born and raised here and he has sinus problem and those kinds of things. I am concerned about my kids growing up in this environment. I have developed them, that kind of thing.

M: THE REST ARE MIDDLE OF THE ROAD? 7.

We don't want Sacramento to become like LA. The kids, it is also affecting the children as much as us. It will cut our life span shorter.

Middle of the road. I guess if I was more concerned, I would put more of an effort into it. And I don't, so I must not be that concerned.

I think as far as being concerned about it, we have to look at the economic side of the picture. We are not going to replace the car, we are not going to do a lot of these things, like we have talked about this for 40 some years, in the fall we burn stubble out there of stopping the stubble. What do we do? It costs us more if we...if we had to cut the stubble and we tried to make it into another type of a product, doing some experiments on wallboard, things like that. So unless we can provide the farmer with an alternative or an advantage, financial advantage, we are going to continue to doing it the least expensive way, to burn it.

M: THE THIRD, LAST THING I TALKED ABOUT. HOW MANY 8,9,10 HIGHLY INVOLVED AND MADE EFFORT TO IMPROVE AIR POLLUTION. NONE. HOW MANY 1,2,3? FOUR. LOW NUMBERS, WHY NOT DONE ANYTHING?

I hadn't thought about it. I hadn't paid any attention to it, but now that you brought it up, you made me think.

I haven't put any effort into it. I can't say why.

To be honest, I work around motors and engines all the time and that is the last thing that I want to deal with. So I don't really care about it.

I am down to the "3" level. Probably the reason why I am at the "3" level is that it hasn't affected my wallet. Until the time that it affects my wallet, then I will become very involved in it.

M: MIDDLE OF THE ROADERS.

What do you mean by what we have done? Keep your cars, the old cars that burn the road behind you, taking care of those, or tune up, making sure that... I think that is a big factor. I think that smog from cars is a concern. It dumps, it does a lot of dumping. You can't walk down the street without choking, that car should be off the street. Outside of doing the normal maintenance...I think that I am concerned, but there isn't an awful lot that I can do. I keep my cars running...

I think what you are able to do is pretty much governed by what the government forces you to do. For the gross polluters, there are smog checks, smog check II I think they have gone to real extremes, but that is beyond our control. That is about the limit of what you can do in participating in cleaning up the environment. If you get away from things like recycling and stuff. With respect to reducing fluorocarbons, you are pretty much limited to what the retailers offer as far as pump sprays as opposed to aerosol. For other fluorocarbons, I think they are in air conditioners, freon. I don't actively look for bootleg freon.

Some of the things that I have done, I use to have a car that was 10 years old, big full-sized Buick, I got rid of it, in fact I donated it to charity, wrote it off, bought myself a used vehicle that is 2 years old, much more efficient. I was making a list here of my gas and electric. Some of my electric stuff like my chain saw, when it went, I will probably replace it with an electric chain saw. (WHY) This is a convenience issue. For one, I hate dragging cords around stuff, even though I have both a gas and an electric weedeater. Just the thing of storing fuel, oil all that stuff. Going to the mechanics and getting this thing up and running. It is a lot easier to plug it in and do the job. With the asthma and stuff, I don't like breathing in that exhaust any more than anyone else does. I have gone to the measure of actually replacing my gas powered stuff when they break with electric because of this.

M: HOW MANY HAVE HEARD ABOUT THE CALIFORNIA AIR RESOURCE BOARD? FIVE OF YOU. THE CARB HAS PROPOSED EMISSION STANDARDS FOR HAND-HELD LAWN AND GARDEN EQUIPMENT BEGINNING IN 1999. OUTCOME WILL BE OTHER EQUIPMENT OPTIONS AVAILABLE THAT MEET THESE STANDARDS. 1995 WAS "TIER 1" EMISSION STANDARD. "TIER 2" IS COMING IN 1999.

I don't really trust the air resources board to make an intelligent assessment of what is necessary. It is a good balance between charging for a clean environment and at the same time not shorting industry that supports the people who live in this area.

I feel that we are going into this and it is a political thing. It is a hot thing to talk about right now. The people that are elected to power say that we have a problem with air that has to be addressed immediately. We run out and do all these things and in 2,3,4 years down the road we find that we are going in the wrong direction. We were talking about freon. I feel that freon is the biggest joke in the world. You took away the freon. I work part time for a parts house and when we lost freon with the new additive, you lost 25-30% of the cooling efficiency. Freon is far more efficient to run in a cooling system than the new chemical that they brought in here.

M: 1999 NEW STANDARDS, EMISSION, NEW OPTIONS AVAILABLE AT RETAIL IF YOU WANT TO BUY THESE KINDS OF EQUIPMENT THAT YOU HAVE BEEN USING, CHAIN SAWS, TRIMMERS, EDGERS ETC. REACTIONS. FIRST THOUGHTS?

How would it be enforced?

I would be concerned as far as the performance. Most of my electrical tools aren't as efficient as my gas, 2 cycled machines. I just can't imagine going to cut the wood with the electric saw. I have never seen a saw that efficient that would do the same job as my power saw.

M: WOULD YOU PRESUME THE OPTIONS WOULD BE ELECTRIC?

When you say that you are going from power to electric, what are the other options?

M: OTHER OPTIONS THAN ARE CURRENTLY AVAILABLE OPTIONS THAT YOU GET RIGHT NOW WILL NOT MEET THE EMISSION STANDARDS IN 1999.

It would be the power loss, I would think. And then it would be would I need a smog check now? Who is going to be doing it. Without knowing the options, it is scary.

For myself if it ended up being the difference that I would either have to use a 2 cycle engine, which you say I couldn't, or go to an electric, I wouldn't... If I use a skill saw or an electric chain saw on the job and there is no power, then I would have to bring a generator out there and start that up. So, there is the pollution again.

If you are going to start that up, you might as well start the chain saw.

M: WITHOUT ANY MORE INFORMATION THAN I HAVE PROVIDED, WHAT DO YOU THINK YOU ARE GOING TO BE DOING, REALIZING THAT IN 1999 THERE WILL BE NEW PRODUCTS THAT MEET THE EMISSION STANDARDS?

I would say that I will try other fields. I will have to be buying what is available.

M: WHETHER YOU NEED IT OR NOT?

Of course not, but if you cannot buy a tool that you use to use to do the job because it is unavailable, you are probably going to be registering it, licensing it, the government is going to know what you have and when you have it and when you replace it.

It might come down to where it is cheaper and more efficient just to hire a professional landscaper to come in and do your yard work for you.

M: HERE IS MORE INFORMATION. AS AN OPTION TO THE 2 STROKE ENGINES, A POTENTIAL TECHNOLOGICAL APPROACH TO MEET THE NEW STANDARDS WILL BE A 4 STROKE ENGINE WITH A CATALYTIC CONVERTER. OR MAYBE A 2 STROKE ENGINE WITH A CATALYTIC CONVERTER. WHAT DO YOU THINK?

I say that it would burn fuel a lot cleaner.

But we would need three people to help us carry it. If you go to a 4 stroke engine. All I want is a nice light weedeater. I just want to get out there and go and get the damn thing over with.

It is the way it costs....(ARE YOU ANTICIPATING A LOT HEAVIER?) You have to have a reservoir for oil if it is going to be a 4 stroke. There is going to be a catalytic equipped machine, it is going to have additional apparatus.

M: WHAT ARE YOUR EXPECTATIONS WITH THE WEIGHT?

The two stroke is nice because it is nice and light. You have doubled up the weight.

I think it is going to increase by at least 30%.

Some things like a lawn edger that is already on wheels isn't going to make a bit of difference. It is going to be bigger and heavier, but it is going to perform the same function. I agree with the string trimmer, but not the edger.

I think it is definitely going to make a difference in your pocketbook.

M: PUT DOWN WHAT YOU THINK THE PRICE DIFFERENTIAL WILL BE ON A PERCENTAGE BASIS. WHAT IS AVAILABLE NOW, WITHOUT KNOWING ANYTHING MORE, I THINK IT IS GOING TO COST X% MORE. IF YOU DON'T THINK IT IS GOING TO COST MORE, SAY YOU DON'T THINK IT WILL COST MORE OR MAYBE LESS. IF LESS, HOW MUCH LESS.

I also think that if it has a catalytic converter, I don't know a lot about catalytic converters, although I had a friend that pulled his car into a field and it started the field on fire. The catalytic converter is so hot that it did that. With a weedeater, you set it down for a second and.....

M: I AM GOING TO GIVE YOU SOME CHARACTERISTICS AND FEATURES OF THIS POTENTIAL NEW TECHNOLOGY AND I WANT YOU TO TELL ME ON A 1-10 SCALE, WHATEVER FEATURE THAT I TALK ABOUT, I NEED FOR YOU TO GIVE ME A NUMBER HOW MOTIVATING THAT FEATURE IS TO YOU. A HIGHER NUMBER INDICATES VERY MOTIVATING, LOWER NUMBER LESS MOTIVATING.

4 STROKE ENGINES WITH A CATALYTIC CONVERTER WILL USE LESS FUEL.

HOW MANY 8, 9, 10? NOBODY.

It doesn't burn that much fuel to begin with. It doesn't consume that much gas, that you would use in a month's time. Maybe 2 gallons? Three?

Maybe that much in a year.

It is not hurting the pocket any.

I don't think that it would motivate me, not just to save gas.

M: ARE THE REST OF YOU IN THE MIDDLE? 5, 4, 3, 3, 3. BIG DEAL, RIGHT? IF I HAD GIVEN YOU A NUMBER, YOU COULD SAVE X NUMBER OF DOLLARS NOT ONLY ON THE FUEL, BUT YOU ARE SAVING MONEY. WHAT WOULD IT TAKE TO HIT YOU.

Would you swap my equipment for yours, after I have seen it. I don't think that I would go out and spend...my weedeaters, they run about $100. If you would give me a dollar amount to swap out after I have seen this and I think, okay, I would try that, then you would swap me out. I don't think that I would rush out there and buy a new one. My tools have to fall apart first. When they fall apart then that is it. My saw is brand new and I love it.

M: WHAT I AM HEARING HERE IS THAT YOU DON'T USE ALL THAT MUCH FUEL TO BEGIN WITH AND YOU DON'T EXPECT THE SAVINGS TO MOTIVATE.

I use my saw 3 or 4 times a week. But still, I don't go thru a lot of fuel. Out on a job, if I make 10 cuts on a foundation, that is a lot.

M: SECOND FEATURE. IT ONLY APPLIES TO THE 4 STROKE TECHNOLOGY, NOT THE 2 STROKE. BUT IF THERE IS A NEW OPTION OUT THERE THAT IS 4 STROKE, IT WILL ELIMINATE THE PROCEDURE OF MIXING THE OIL AND THE GAS. HOW MOTIVATING IS THAT NOT TO MIX THE OIL AND GAS?

HOW MAY 8,9,10?

I have "7". It is a lot easier to go and pore gas in my lawnmower and pull it and start it than it is to go down and get 2 cycle oil and mix it. If you run out on the job and you don't have any 2 cycle oil, you have to run out and get some. Whereas if you have a 4 stroke engine and you have a siphon hose you can pull some out of your truck and then you are on your way.

I understand his point of view, because that is a part of his lifestyle to use that. For me, it isn't. I do my yard work every Saturday and that is it. I have a separate gas can and one has 2 stroke and the other has that and it is marked.

I fill my gas tank probably once a season. I have a 2 1/2 gallon gas can, I mix it. Unless I go out and harvest wood, that gas will stay there, I probably will loan it out.

I go along with that. Mine was a "3" for the very same reason, that this is the way that we work and we pre-mix it in a big container.

I have had my neighbor come over and ask if I have any 2 stroke already mixed, because he had run out of oil, not the gas, but the oil. and you pore him a cup and you don't miss it. That is what neighbors are for.

M: IS THIS A BENEFIT?

It can be, because you have to hope that if you don't do the big container, then you do the small thing, that you are the one that mixes it and it is not my son doing it. Because if you do mix it and it is wrong, you can cost yourself an engine. So I will go with a "6".

No. (WHO MIXES IT IN YOUR HOUSE?) My husband, but still I have to go and buy it and get the gas and have it all ready there. (WOULD YOUR HUSBAND SEE IT AS A BENEFIT?) No. Because it is going to cost him more money.

M: THE THIRD ONE. THE REDUCTION OF EMISSIONS IS A BENEFIT IN THE SENSE THAT THERE WILL BE LESS POLLUTION IN THE AIR AND THE UNIVERSE. THE REDUCTIONS OF EMISSIONS WILL BE A REDUCTION IN POLLUTION IN THE AIR. PERSPECTIVE VS EQUIPMENT FROM 1995-FIRST PHASE, TIER 1, THE NEW OPTIONS WILL REDUCE THE HARMFUL POLLUTANTS BY 60-80% VS THE UNITS CURRENTLY AVAILABLE THAT STARTED COMING OUT IN 1995. AND COMPARE NEW THINGS FOR 1999 WILL QUADRUPLE THE AMOUNT OF LESS HARMFUL POLLUTANTS. SUBSTANTIAL SAVINGS. MOTIVATING? 8,9,10? THREE OF YOU. REST OF NUMBERS? 5,5,3. FIRST HEAR FROM 8,9,10.

I considered going to electric as an alternative when the time came to replace them. Health reasons, I hate breathing this stuff. I already have asthma and

allergies. I don't have this problem with my lawnmower, but when I have to fire up the other stuff, I sometimes wear a mask.

I agree. Mine was a "9" for two reasons. The first one is that those 2 strokes really belch it out. Obviously belch it out. And it is difficult to work with those tools without absorbing some of that. Secondly it is because those old motorcycles, when you see a lot of those old 2 strokes on the street, and they visibly pollute the atmosphere. The 4 cycle, regular motorcycles we see today, I don't know if the government banned those 2 cycles, but they are much, much cleaner. And we are all concerned about the environment to the extent that if there is something that you can do that fits into your lifestyle that is economical and you have a choice, I know that I will do it. And I think that most other people will also.

I think that it does have a lot of truth in it. I put an "8" on it because it will cut a lot on the smog. I hate smelling it when I am cutting the edges and it is right there.

I just want to make another comment on that. When I think about this, it is almost personal. I don't think of it as I am doing my part to cut down on pollution in the Sacramento Valley. That is the least of my concerns. I am doing it for me. It makes me feel better about the way that I do my yard work.

If you could do something about the noise pollution, I would make a personal..... Put a muffler on it.

M: HOW ABOUT THE MIDDLE OF THE ROAD NUMBERS?

Myself, I said that I am a "5" because it was an improvement as far as....it is a package deal, if it is packaged and you are dealing with the sound...it would motivate me a little more. I am going more for the change. I have never have allergies either, but in the last few weeks I picked up a cold and I don't get colds, so it must have been pollen or something. And the pollen is probably the problem because there are so many trees. Back to your point, if it is more for me to benefit, for me to go thru my tools, then I would consider it, the price and stuff. But just for me to have a 4 stroke, if you mix your oil and gas properly, the smoke and gas is minimal, it is not that bad, not to the point that it bothers me.

I would say great on the reductions, but what am I losing to get these things, power? What am I losing.

For me it is not something that I would go out and replace a piece of my equipment just because it is going to be less fuel or less pollution. If I went out to

replace it, it would because I needed to replace it. If it needed to be replaced, then I definitely would look into something that would do less pollution or use less fuel or convenient as far as mixing my fuel and so forth.

M: YOU WERE AT A "3"?

I would not go out and replace good operable equipment just because I was going to reduce emissions. Because it is a cost to me.

M: FOCUS ON SOMETHING ELSE IN REGARDS TO REDUCTION OF EMISSIONS. THE NEW OPTIONS WILL CLEARLY WILL MORE HEALTHY FOR THE INDIVIDUAL WHO IS USING THE EQUIPMENT.

(CHANGE OF TAPE)

MORE HEALTHFUL FOR THE USER. HOW MOTIVATING IS THAT? HOW MANY HIGH NUMBERS, 8,9,10? THREE. OTHERS? 6,3,4,5. WHY?

I am in it all day long, it doesn't matter.

I rated it a "3" because if I was using it more often, 3 or 4 times a week then it would be a different factor. I use it one day a week and I can't believe that is going to shorten my life expectancy that much using the power equipment one day a week.

Same thing, infrequent use. I wear a mask.

If I am going to buy a new power tool, I would probably buy something that is going to be healthier and something that I am going to save on.

If you have a broken weedeater now, you are going to replace that before 1999, you are going to take the new one that you are going to replace now and you are going to replace it again.

I think that for myself looking at this new equipment would be great but I wouldn't replace it with one of those new things unless my old thing was broke. I wouldn't dig into my pocket for health reasons, less pollution, better engine or anything unless I needed to. At that point, if I needed a new piece of equipment...

M: WHAT NUMBERS DID YOU GIVE IT? "9"

I gave it an "8". I hope that I understood this correctly. If I have to buy another piece of equipment, I would consider all the health benefits, that would be a strong reason for me to go and buy that particular unit versus an old fashion one.

I might have joked about a muffler, buy if it had air filters or anything else on it, we have a lot of working tools at our house, we even have a sander that has a bag on it, sucks up all the dust and what-have-you. I am thinking of things like that when I think of gas tools, maybe something of that nature would be of benefit.

We are sitting here talking about pollution and up until we started raising all this ruckus about 2 cycle engines within the last 2 years, how many of this table had really given it a thought that that 2 cycle engine was doing any major change in the atmosphere. If your client is thinking that they are going to run an ad campaign and sell power equipment based on it is healthier, it is going to put out less emissions, he can save his money. That is my opinion. He is wasting his money.

I believe that when it comes time to replace it of these motivating factors, there are some that would persuade me to pay more money for the more efficient ones. I should say the one that is more pollution free than the standard model by maybe up to 30% more than the standard one out there. But for me, it would be a matter of when it is time to replace. It would be the fact that it is healthier, even though I gave that a low rating, at replacement time. When I have to replace it anyway. And the fact that it does reduce emissions because in my experience, I can visibly see the difference between the 2 stroke and the 4 stroke. When you multiply that by thousands and thousands of people on a Saturday morning, it can really have an effect, I am sure.

M: ANOTHER FEATURE. THE CALIFORNIA AIR RESOURCE BOARD WILL REQUIRE THE MANUFACTURERS OF THESE NEW EQUIPMENT TO REPAIR ANY MALFUNCTION TO THE ENGINE OR THE ENGINE PART TO THE EQUIPMENT. SO THERE WILL BE A WARRANTY. SOMEWHERE BETWEEN TWO TO FIVE YEARS ON ANYTHING WITH THESE NEW UNITS THAT HAPPEN TO MALFUNCTION IN REGARD TO THE ENGINE ITSELF. HOW COMPELLING IS THIS? 8,9,10? ONE. 1,2,3? NONE. REST ARE IN-BETWEEN?

"10" Only because I go thru the equipment and if it is going to have a good warranty on it, that would be something that would make me buy it.

M: REST OF YOU, NOT COMPELLING? WHY?

I think it is a negative. If you have to force these guys to guarantee their stuff, then it is a piece of crap. Anytime that the government tells you to do something, forces a manufacturer to insure this thing, they have to assume responsibility for a piece of equipment that has been engineered in accordance with American Engineering standards, that means that they foresee nothing but problems with this thing, in my opinion. Otherwise, manufacturers would normally provide a reasonable warranty as a reflection of the product they have in their engineering manufacturing capabilities. I would think that there would be lots of problems with something that they absolutely force people to do for one, the costs have to be way up there.

I think that most of them are providing warranties already as it is. Most of them would probably already comply with the new standards.

But the difference is that they are providing it because they have confidence in the product.

Myself, when I buy a piece of equipment, I go upon the manufacturer reputation because when you get out in the field and at home, when you are out there whacking away or doing with the equipment, you want it to operate properly. You don't want to have to worry about it. If you have a new piece of equipment, I estimate 30%.....it is probably going to cost 30% more than the same engine is going to cost me. So the price is going to go up. I don't think that it is going to be cheaper.

M: THE REASON WHY THE CARB IS REQUIRING THIS OF MANUFACTURERS IS THAT IF THERE HAPPENS TO BE SOMETHING THAT GOES WRONG, THIS IS NOT BECAUSE THE ENGINE IS MORE SUSCEPTIBLE TO BREAKING, THE FACT IS THAT IF THERE IS A MALFUNCTION WITH THE ENGINES, THAT MEANS THEY WILL NOT AUTOMATICALLY THEY WILL NOT MEET THE EMISSIONS STANDARDS THAT WILL BE VERY STRICT. THEY WILL NOT PASS AT ALL. NOT BECAUSE THEY WILL MORE LIKELY TO BREAK DOWN BUT THAT THE MANUFACTURER IS RESPONSIBLE FOR REPAIRING THAT. CHANGE PERSPECTIVE?

There are 4 stroke engines out there now, the function of them are going to still act the same, the pollution end of it...

With the new smog law, I buy this equipment, it doesn't pass the smog, but he is going to pay for it. Is that what you are saying? I purchase the unit from you, it

doesn't pass the smog test, you are the manufacturer and I just go back to you and you repair it for free? (YES) That is a motivating factor.

There is a flaw in that reasoning, I think. Firstly, if the manufacturer is going to fulfill the standards at the time, right, how are they going to know that this is going to fall below standard for them to force the manufacturer to, the government, why are they doing this without the requirement that you take and put it out to have it checked? What you are saying is that you are saddling the homeowner with the responsibility to take this sucker down to these guys and put it on the smog...

If you have a 4 stroke engine and it starts burning a lot of oil, you know that you have problems with the engine and that is the time to take it in, work on it just like you would now. It is not something that you are going to say, it smells like this and it needs a tune-up.

So you are going to self-certify as the owner of this device, you are going to be in a position to determine when it no longer is up to specs, is that it?

No, the State will.

How are they going to do that? I have it in my garage.

M: HE IS SAYING THAT THERE HAS TO BE A CHECK.

Right, and if I fail, I can bring my equipment back to you and the manufacturer fixes it for free. Right?

The way that I understand it, you are not going to take your piece of equipment unless it is not working or not functioning right. It is not something that you are gong to say, I will take it in for a 2,000 pull check-up.

M: NOW WANT TO MENTION 2 MORE FEATURES ON A DIFFERENT SCALE. FOR THESE FEATURES, HOW MUCH OF A BARRIER WOULD THIS BE. HIGHER NUMBER - BIG BARRIER, LOW NUMBER - NOT BARRIER.

THE NEW EQUIPMENT IF EXPECTED TO BE HEAVIER. ASSUMING THAT A TRIMMER IS ABOUT 10 POUNDS, SO IT IS GOING TO BE 1 MAYBE 2 POUNDS MORE IN WEIGHT. HOW MUCH OF A BARRIER. 8,9,10? NOBODY. 1,2,3? FOUR HANDS. REST ARE IN-BETWEEN. TALK TO ME THE ONES THAT ARE IN-BETWEEN.

When you said it was 1 or 2 pounds on a 10 pound item, that is 10-20%. When we originally talked about it, we were talking about 50-60% or more. Now that you have enlightened us, yes, I have changed my mind. I don't think that it is going to be that big a factor for us weekenders.

If it was that light, no. I was thinking 4 stroke, 50% more.

No (problem). They weight that much now.

I don't see it as a problem. It is not that heavy, you still won't notice it.

M: DOES IT MATTER WHAT TYPE OF EQUIPMENT IT IS? TRIMMER A PROBLEM? (NO). WEEDEATER?

More than a trimmer, I would think. Because you are holding all the weight up on yourself. With a trimmer, you are pushing.

M: CHAIN SAW?

No. I don't think that a pound or two on a chain saw is going to make a difference. If I am cutting trees, I can only hold a chain saw for so long anyhow.

M: DOESN'T MATTER WITH ANY TYPE OF EQUIPMENT?

Not if it is hand-held.

10-20% weight increase is no big deal. 50%, 60% is a big deal.

M: SECOND ONE. THE NEW EQUIPMENT IS EXPECTED TO COST ABOUT $35 MORE THAN A COMPARABLE 2 STROKE VERSION THAT IS AVAILABLE NOW. BARRIER? 8,9,10? NOBODY. 1,2,3? ONE. REST OF YOU ARE MIDDLE OF ROAD. I HEARD FROM THE BEGINNING THAT A LOT OF YOU WERE CONCERNED ABOUT THE COST. BEFORE I ASKED YOU ABOUT A PERCENTAGE INCREASE EXPECTED. GO AROUND ROOM AND TELL ME THE PERCENTAGE YOU EXPECTED.

50%, 30%, 30%, 300%, 30%, 30-40%, 25-35%.

M: IS THIS LESS THAN YOU WERE ANTICIPATING? OR MORE?

I was thinking of the $100 string trimmer. When you said $35, that is right in the ball park.

I already resigned myself to the fact that it is already broken and I am going to replace it, like anything else, it usually turns out a little more than you anticipated.

M: WHAT IF I SAID IT WOULD BE $50? IS IT A BARRIER?

I think that you are reaching that level now, because a good leaf blower is around $375, $300, right in that area. Gas, 2 cycle. You put another $50 on there now and you are boosting that upward. Someone is going to have a long hard look at, "do I really need a leaf blower that badly?" A $400 item.

M: WHY DID THIS PRESENT A BARRIER HERE WHEN IT WENT UP $15 - FROM A $35 TO A $50 LEVEL?

Well, it is a big barrier, might be because you reach a threshold. $35 is not a big change. $50 you have to think twice. It is really almost $60 because it is $50 plus almost $10 tax. That makes it almost $60. It does put it now into almost a major purchase kind of thing, where you have to stop and compare and Consumer's Reports and all that stuff.

It is just a little bit more than you anticipated. Now it is at that level where...

But it is only $15 more, right.

I think that when they start making changes, I might talk to a neighbor, an older neighbor and he was saying that as far as the recycle bins that they put out on the street and he had made the comment that he was at the retirement age. He said that he wasn't going to do it because it costs more for those trucks to run and pick up the stuff than we were benefiting. What my comment was that what we were doing was for our kids. I think that every consumer looks at the fact that when you make a change and you start saying "OK", it is going to be a little more. When you say it is going to be a little more, is that 30%, then you say maybe 50%. Then you say that we have to take it in more because there might be a malfunction. It is more of a headache. Then you say, do I want to buy that piece of equipment? Then I have to worry about this. Maybe it is better for the air, buy you have 3 or 4 more things that you have to worry about if you buy that piece of equipment. The new piece of equipment.

I was thinking it might also be the difference if you just write a check and pay for it or you charge it. Then you have to think about finance charges on top of that. $135 I might just bite the bullet and write a check. At $150, I might whip out the plastic.

We are living in a town that is a government town and I think that there is a lot of State and Federal government here and these people are very frugal. I am not saying that they are cheap, I am saying that they don't get big salaries, they are very cautious about what they do. Sacramento has been known to not have the variations in the economy like Fresno or Stockton, which is more of a farm economy than we do. So for that price, we pay a charge. We don't have high end things that these people jump on and support right off the bat. I think that when you get to that $50 range, you are going to scare a lot of the Federal employees away.

M: DROP BACK TO THE $35. I HAVE TOLD YOU ALL THE CHARACTERISTICS THAT I CAN TELL YOU RIGHT NOW IN THE WORKS FOR THIS TECHNOLOGY THAT WILL BE DEVELOPED IN 1999. WHEN 1999 COMES, WHAT WILL YOU DO? BEHAVIOR CHANGES HERE?

It depends, if the old stuff is still available. If they are both available and it is a choice between the two. If it has all those features that you discussed, when it is time to replace, in my case. If I have a usable piece of equipment in 1999, 2010, then I will not replace it. It is not motivating enough for me to go out and buy another one of those things.

Same.

I think that he hit the nail on the head there. As long as there is a choice.

M: ONE POSSIBILITY WHERE THERE COULD BE A CHOICE, BUT THERE MAY NOT BE A CHOICE, IF THE CURRENT PRODUCTS WILL NOT BE OUT THERE IN 1999, ONE OPTION THAT IS BEING CONSIDERED AND REVIEWED IS WHAT IS CALLED CORPORATE AVERAGING. I MEAN THE MANUFACTURERS ARE TOLD, THE NEW EMISSION STANDARD IS "20". IF THEY COME UP WITH A NEW 4 STROKE CATALYTIC OR MAYBE A NEW 2 STROKE CATALYTIC AND THEY ACHIEVE "10" ON THAT, THEY CAN MANUFACTURE AN EQUIVALENT OF THE CURRENT PRODUCT AT "30". WHERE IT WOULD AVERAGE "20". WHAT DO YOU THINK OF THAT?

We are trying to improve the air quality, right? And when we start to do these "Corporate Averaging", what are we really doing? I think that the fear that we have is "Is this going to cost me more? How much is it going to improve?" That is what I consider and make a decision. Am I really doing something good for myself, am I doing some good for my fellow man? Is this another trip? Somebody

in the office has a wild head and he is trying to exercise it. Am I a part of it? Those things I will really take into consideration. Because we do have laws right now, like the Smog Check II. There are a lot of things that don't balance out.

Is there a government policy in there?

I think that the option that you are talking out would be a weeding out process so that the company can go to the direction of the new ones, but do it in a slow manner, kind of like swapping your cars before...you have $800 of work that has to be done and if you get $300 worth of work this year and....

M: WHO IS IT BENEFITING?

The manufacturer.

And the consumer too. Some of the old products will remain on the shelf and introduce the new product, which means that the manufacturers have permitted them to produce the other product by averaging out the sum of the two. Very selfishly, by the time that I need another one, if I should buy one of the older one, if that is my choice, by the time that one wears out, I will probably be dead, so it won't be a problem for me. But at the same time, it doesn't force the manufacturer and the consumers to rely on unproven technology and perhaps more costly technology.

M: 1-10 ACROSS SHEET. CIRCLE ONE OF THE NUMBERS. DIFFERENT THINGS CONTRIBUTE TO AIR POLLUTION, SOME MORE THAN OTHERS. WHERE DOES HAND HELD LAWN AND GARDEN EQUIPMENT, 2 STROKE, 2 CYCLE ENGINES FIT HERE? NOW WHATEVER NUMBER YOU CIRCLED, IDENTIFY THINGS THAT ARE ABOVE THAT AND BELOW THAT. WHAT POLLUTES MORE OR LESS?

HOW MANY BELIEVE THAT IT IS A STRONG POLLUTANT, 8,9,10? NOBODY. 1,2,3? FOUR HANDS. OTHER NUMBERS WERE...4,4,7. THE PERCEPTION IS THAT THESE ARE RELATIVELY...

I think that a lot of that has to do with the size of the object, too. You look at it and you have a little object, little engine, little pollutant.

I put above that cars, factories, jet skies, boats.

Automotive.

M: HIGHER?

I gave it a "2".

Barbecues, fire places, motorcycles, automobiles, industry, fires.

Buses, cars, stuff like that. I had a "2".

I would say cars, factory emissions, logging farming, nuclear energy, the afterwaste.

We were referring to yard tools, that is where my mind is at. I would say that for a 2 stroke engine, if I use my weedeater, I would say depending on the size of the equipment, my chain saw would probably put out more emissions than my weedeater. I know that my car does. I put a "7" as far as emissions. If you are talking about all the things in the world, there are a whole lot of things that would fall much further than my poor chain saw or weedeater.

M: LET ME JUST READ YOU A FACT HERE. HAND-HELD, 2 STROKE UTILITY EQUIPMENT IS RESPONSIBLE FOR 62% OF TOTAL EMISSIONS AND 55% OF TOTAL PARTICULATE MATTER EMISSIONS.

I am shocked.

I don't believe it. Absolutely don't believe it. I don't trust the government, I don't trust the people that came up with those numbers, they have a vested interest in doing this stuff. We have been proved time and time again they over-react. I would need better research findings than I believe...

I don't believe it because I have seen so many jokes from the federal government. Look at this spotted owl thing. We went into the spotted owl, we put a lot of people out of work and now all of a sudden we are saying that the spotted owl can live in a new growth forest as well as it can in the old. Things like that. We came out with the nuclear energy...

I don't believe it. That is amazing. I think that there are more cars on the road than there are chain saws. It is hard for me to believe that 1/2 hour a day, me running my chain saws puts out more pollution than say me driving back and forth to work in my 8 cylinder truck. I don't know the facts or anything, but that is how I see it.

Doesn't add up.

Please don't gang up on me, I want to say something. That thing is big, you have it so close to your body, you are smelling it.

He is talking about overall pollution in the atmosphere. That chain saws, 2 cycle engines create 60% of the pollution.

I walk out there and I see that cars are polluting and I can look out there and see 100 cars. But don't go and tell me that it is the chain saws and the lawn mowers that are causing 62% of the pollution.

What about the diesel trucks, or the school buses or the firetrucks that comes to your house for the 911 call. Or the Sacramento PD cars.

I was just thinking that for my personal use, when I think about my truck, my barbecue, my fireplace and how much I pollute and then I get back to that little thing that I do on Saturdays, I just can't believe that that is 62% of my waste every week. The other thing that I was thinking about too is that if I took that weedeater down to the local smog shop with my car and said that I would like to get it where they put a hose on it and I want to know how many particles you rate this thing, how many it is putting out.

Who knows how they come up with these numbers, but it defies reason. How can this be?

You use your weedeater or your trimmer for 20 minutes every other week, you run your car for.....

M: THAT 62% WITH THE HAND-HELD CONSTITUTES 62% OF ALL UTILITY EQUIPMENT. I AM TALKING ABOUT LAWNMOWERS, TILLERS, ALL KINDS OF UTILITY, RIDING LAWNMOWERS AND ALL. MORE BELIEVABLE?

I don't know, let's talk more. I will have to think about it.

If what you are saying is true, I think that it is unbelievable. I think that it is something to know. Something that we might consider. If the facts and the findings are correct, then that would weigh upon us purchasing something new.

M: KNOWING THAT AND THAT IT IS A FACT, HOW WILL YOU CHANGE YOUR BEHAVIOR? IF NOT, HOW WILL YOU HELP OR CONTRIBUTE. YOU HAVE AN OPTION TO CONTRIBUTE HERE, IF YOU DON'T TAKE

THAT OPTION UPFRONT, WHAT ELSE WILL GIVE? CAN YOU IMPROVE WHAT YOU PERCEIVE TO BE MORE POLLUTING?

I will work harder on segregating my garbage for you. I will put the newspapers in the plastic box and I will put the plastic jars aside, and I will just keep firing up my mower. I am not going to go out, because I am going to cut down pollution and replace all my equipment, no way. If the equipment breaks down, when I get ready to replace it, and the new will be there, I will not have an option. I will be forced to buy what the manufacturer has on the market, or what the government allows the manufacturer to make.

If the equipment needs to be replaced, replace it with what is on the market. I am not going to make a trip to the store to buy something that I have already and it is still working.

If you know that this law is going to go into effect on a given day, I think there is going to be an absolute mad rush for existing things. I certainly would do that. I think that for some of us, it always comes down to dollars. When you already told me that it is going to be $50 more, $35 more, that is going to be a factor. I might just say that I have to put up with it. On Saturdays, instead of taking my normal dose of medication, I take a double dose on Saturdays and I go for it. May just come down to plain old cost. Slide in under the wire and maybe I won't have to buy again for a couple of years.

M: WHEN WE TALKED ABOUT THE COST AT $35, YOU STARTED TO BALK AT $50, BUT $35 DID NOT APPEAR TO BE AN ISSUE FOR MOST OF YOU IN HERE.

When I considered the two alternatives, my health is important, buy my pocketbook is too. I would rather spend less money, I have health insurance anyway.

As human beings, unless you can come up with some facts, figures and facts that we can relate to, something that is probably going to scare us, that is going to make us sit up and take notice, it is going to be hard for the average person to go out and hock...I would not hock my Toro blower for a brand new one if my Toro blower is working fine, moving those leaves down the road and I am done with my job in an hour versus me raking it. I am not going to go out...unless it is going to help my daughter breath better or my wife is not going to send me to the store at 12:00 at night because she is having an attack. If you can tell me that, you will probably sell it to everybody. But you are not going to sell the average person,

this is my point of view, nobody is going to go off and change their equipment, unless their equipment is ratty already.

If it has a good warranty on it, and it sounds like we are going to have the smog checks on this, we ain't got a choice. There is a manufacturer warranty where if it breaks down in 5 years, they repair it, I will purchase it.

M: WHO ELSE WOULD GO OUT TO THE SHELVES AND GET SOME OF THE OLD STUFF BEFORE THE NEW STUFF COMES OUT?

Black market mowers?

If there is a cost incentive, and if there aren't any compelling reasons, value, real value. Something like it spits out 62% of the pollutants of all the other stuff that you use, that is not enough. Because 60% of all the other stuff that you use is nothing. When you say 60% of this group of tools, lawn tools and that grouping of lawn tools is nothing, then 60% of nothing. That is not enough.

I think if you quantify it differently and you say that this piece of equipment that you presently is 50 parts per million and you know what 50 parts per million smells like, and this one does 20 parts per million, then you are saying, hummm.

But you have to add things to that also. That is the only factor that makes a difference.

It is human nature, you go to a garage sale, and just because it is a good deal on something, we buy it, whether we need the thing or not. That is what he said. If it comes down to it, I will buy 4 of them and then I have enough for the rest of my life. Myself, if this is something that is going to come up in '99, I am not going to be one that goes out in December of '98 and buys 4 more chain saws than I have.

I bought a mulching lawnmower a few years ago, Troy built, because I thought this was really going to help my lawn. I am really upset with myself now. First thing, the mulching lawn mower sits in my shed because I don't like it. Secondly, I have St. Augustine grass, so it doesn't apply because St. Augustine runs along the dirt versus Bluegrass. I have a worthless lawnmower. Now the lawnmower is something that I can do for the environment, mulch and you put the grass back into the lawn, makes your lawn greener. After I got it and I spent all this money for it, it was more than the average lawnmower. Because you have to do maintenance on that baby, unlike the other ones, you just wash it off and put it away. The mulching lawnmower you have to clean it, make sure everything is right. So I

have to spend an extra hour cleaning up my lawnmower. I don't want to do it, it is not in my nature. And then the lawnmower is not needed, it is predicated on your need. If you have a major problem. I didn't know. I thought it was a good idea. The point is, if you are going to sell a new product and it is going to help our environment, it has to really be what we need, has to be affordable. We don't want to be forced into it.

As far as the emissions on cars, they are making us do that now.

I am glad you said that, because I bought a mower just like you bought, a mulching mower and your right, it does cost more money. I bought this from one of the higher priced retail lawn mower in Sacramento who convinced me that this was the greatest thing because eventually we are going to eliminating within the Sacramento city limits, the putting of your leaves and things out in the street, so you will be a jump ahead of your neighbors. It is a joke, it is a piece of garbage, pure garbage.

Mine is a Toro and they are expensive. With those things you look at it and you are not too smart. Once you get stuck....

CONCLUSION

CARB LIBRARY
11524