sierra research

Report No. SR94-01-02

Development of an Onboard Data Acquisition System for Recording Vehicle Operating Characteristics and Emissions

prepared for:

California Air Resources Board
Contract No. A096-214

January 27, 1994

prepared by:

Sierra Research, Inc.
1801 J Street
Sacramento, California 95814
(916) 444-6666

TL
209
D5
1994

sierra research

Report No. SR94-01-02

Development of an Onboard Data Acquisition System for Recording Vehicle Operating Characteristics and Emissions

prepared for:

California Air Resources Board
Contract No. A096-214

January 27, 1994

prepared by:

Sierra Research, Inc.
1801 J Street
Sacramento, California 95814
(916) 444-6666

TL
209
D5
1994

DEVELOPMENT OF AN ONBOARD DATA ACQUISITION SYSTEM FOR RECORDING VEHICLE OPERATING CHARACTERISTICS AND EMISSIONS

prepared for:

California Air Resources Board

January 27, 1994

principal author:

Frank Di Genova

contributors:

Thomas Austin
James Tilden
John M. Lee
Paul Tarczy

Sierra Research
1801 J Street
Sacramento, CA 95814
(916) 444-6666

Disclaimer

The statements and conclusions in this report are those of the contractor and are not necessarily those of the State Air Resources Board. The mention of commercial products, their source or their use in connection with material reported herein is not to be considered as an actual or implied endorsement of such products.

ERRATA to
"Development of an Onboard Data Acquisition System for Recording Vehicle Operating Characteristics and Emissions,"
by Sierra Research
September 8, 1993

The following table replaces Table 8-1 on page 66 of the report:

ROUTE	TIME (SEC)	DIST (MI)	AVG SPD MPH	MAX SPD MPH	MAX ACCL G's	MIN ACCL G's	PKE (miles/ hr^2)	OVER_FTP_ACCL # OF SECS	OVER_FTP_ACCL % OF Time	FUEL # OF Gal.	FUEL ECON mpg	--- EMISSIONS PER MILE --- EXHAUST g/mi	HC mg/mi	CO2 g/mi	CO g/mi
0716-5	855	8.79	37.0	65.0	0.258	-.211	2587	21.0	2.4362	0.44	19.8	1923.23	68.08	444.85	4.39
0716-8	936	8.81	33.9	66.8	0.280	-.307	2967	42.0	4.4586	0.48	18.2	2069.89	73.85	480.59	6.95
0716-11	893	8.73	35.2	65.8	0.250	-.263	3348	33.0	3.6707	0.49	17.9	2071.32	111.26	485.77	9.24
0716-14	872	8.76	36.1	65.9	0.274	-.263	2771	30.0	3.4130	0.49	17.9	2080.59	75.66	493.24	4.82
0720-0	884	8.81	35.9	63.6	0.238	-.200	1871	12.0	1.3498	0.49	17.9	2085.05	53.37	496.79	2.24
0720-3	930	8.82	34.2	64.5	0.245	-.250	2089	23.0	2.4546	0.55	16.2	2277.88	34.82	549.37	2.57
0720-6	865	8.75	36.4	65.6	0.231	-.445	2028	13.0	1.4925	0.47	18.6	2293.46	60.35	477.82	2.36
0720-9	899	8.78	35.2	64.6	0.250	-.234	2115	17.0	1.8805	0.48	18.4	2328.96	36.20	486.10	0.82
0720-12	881	8.74	35.7	63.6	0.389	-.365	2794	49.0	5.5305	0.58	15.0	2603.04	852.20	538.91	35.72
0720-15	938	8.76	33.6	58.9	0.192	-.346	1982	8.0	0.8484	0.48	18.2	2160.46	94.75	489.92	1.36
0722-3	797	8.73	39.5	63.5	0.424	-.363	2687	39.0	4.8568	0.58	15.0	2516.26	948.19	532.95	38.57
0722-6	989	8.77	31.9	56.1	0.198	-.284	1901	12.0	1.2060	0.56	15.7	2472.09	18.19	567.12	1.81
0723-3	801	8.72	39.2	65.3	0.242	-.274	1777	6.0	0.7435	0.51	17.0	2187.21	408.64	493.58	20.80
0723-6	937	8.73	33.6	61.8	0.247	-.282	2078	21.0	2.2246	0.59	14.7	2500.94	501.48	564.37	27.21

The following table replaces page I-37 of Attachment I to the report:

TIME (SEC)	DIST (MI)	AVG SPD MPH	MAX SPD MPH	MAX ACCL G's	MIN ACCL G's	PKE (miles/ hr^2)	OVER_FTP_ACCL # OF SECS	OVER_FTP_ACCL % OF Time	FUEL # OF Gal.	FUEL ECON mpg	--- EMISSIONS PER MILE --- EXHAUST g/mi	HC mg/mi	CO2 g/mi	CO g/mi
865	8.75	36.4	65.6	.231	-.445	2028	13	1.493	.47	18.6	2293.46	60.35	477.82	2.36

ABSTRACT

An onboard data acquisition system has been designed, installed and tested in a 1991-model Chevrolet Lumina, to collect engine and vehicle operating data, including tailpipe pollutant concentrations. The system measures and records manifold air pressure, manifold air temperature, engine RPM, throttle position and coolant temperature, all on a second-by-second basis. Lateral and longitudinal acceleration and oxygen sensor voltage are measured at 10 hertz and averages are calculated and recorded at 1 hertz. Vehicle speed is measured at 1 hertz and can be differentiated and subtracted from longitudinal acceleration to estimate grade. Additional digital data are sampled and recorded to document gear changes or change in status of the "service engine soon" indicator. A portable gas analyzer is used to measure and record concentrations of hydrocarbons, carbon dioxide, carbon monoxide and oxygen in engine exhaust. In conjunction with the measurements of manifold air pressure and engine speed, the concentration data can be converted to mass emissions. With the exception of the added accelerometers and exhaust gas analyzer, the system samples data exclusively from OEM system sensors. The exhaust gas analyzer requires periodic maintenance, but the remainder of the data acquisition system can be operated automatically upon vehicle ignition. The data acquisition system includes an 80386-based, DOS-compatible computer with a custom-modified power supply and start-up circuitry, a 7 MB battery-backed static RAM card (for computer start-up and data collection without mechanical disks) which is effectively doubled using software data compression, an IBM PC-compatible analog-to-digital converter/digital counter board and custom accessory box and a commercial data acquisition program. While not required in normal data collection, the system can be operated with video monitor for real-time display of most data, and a compact keyboard and mechanical floppy disk drive can be used for data or program exchange. Sample data and calculations are provided to show how road grade and second-by-second mass emissions can be estimated from the measured parameters.

DEVELOPMENT OF AN ONBOARD DATA ACQUISITION SYSTEM FOR RECORDING VEHICLE OPERATING CHARACTERISTICS AND EMISSIONS

Table of Contents

page

1. Introduction 1

2. Computer System 3

   2.1 General Description 3
   2.2 Power Supply and Startup System 4
   2.3 Static RAM Board 7
   2.4 Analog-to-Digital Converter and Counter Board 9
   2.5 Software and Setups for Autoboot/Autostart Operation 11
   2.6 Serial, Parallel and Video Ports and Keyboard 12

3. Data Acquisition Using Labtech Control 15

   3.1 Data Blocks 15
   3.2 Saving, Displaying and Retrieving Data 21

4. Data Collection Using OEM Sensors 24

   4.1 General Description 24
   4.2 Speed Signal and Custom Conditioning Circuitry 25
   4.3 Manifold Absolute Pressure (MAP) Signal 26
   4.4 Throttle Position Signal 26
   4.5 Oxygen Sensor Circuitry 28
   4.6 RPM Frequency Counter 32
   4.7 Manifold Air Temperature (MAT) Sensor 33
   4.8 Coolant Temperature Sensor 34

5. Connections to other OEM Equipment 36

   5.1 Service Engine Soon Light 36
   5.2 Recording of Gear Changes 37
   5.3 Recording of Throttle Position Sensor Voltages at Higher Sampling Rates 38
   5.4 Disconnection of O_2 Sensor 42
   5.5 Feasibility of Installing a Laser Rangefinder 42

6. Accelerometers and Determination of Grade 45

   6.1 Introduction 45
   6.2 Sample Grade Determination 49

7. Measurement of Exhaust Gas Concentrations 54

   7.1 Introduction 54
   7.2 Description of Instrumentation 54
   7.3 Calculation of Mass Emissions 59

Table of Contents, continued

page

8. Sample Data Sets 61

8.1 Grade Data 61
8.2 Emissions Data 62

9. References 67

Appendix A – Instructions for Installation of Labtech Control
Appendix B – Preparations Required for Creation of the PCF-1 ROMDISK
Appendix C – Wiring Diagrams:
C-1 1991 Lumina, Wiring Diagram
C-2 D/A System Wiring Diagram
C-3 Trunk to Passenger Compartment Wiring Diagram
Appendix D – Sample Data Set of SES Light Flashes Indicating Fault Codes
Appendix E – Accelerometer Specification Sheet
Appendix F – Memorandum from Nick Zayan, dated 31 January, 1991
Appendix G – Wiring Connections ("Pinout") for MPSI/Computer Serial Port Data Link
Appendix H – Discussion of Volumetric Efficiency
Appendix I – Sample Data Set of Second-by-Second Engine Parameters, Exhaust Concentrations, and Exhaust Emissions and FORTRAN Program "LUMNA_EM"
Appendix J – Sample Data Set Illustrating Grade Measurement
Appendix K – List of Acronyms Used

List of Figures

Figure		page
2-1	Startup Power Supply Circuit	6
4-1	General Circuits for Most Analog Sensors Used in 1991 Chevrolet Lumina	27
4-2	Zirconia Exhaust Gas Oxygen Sensor Characteristic Curve	29
4-3	High-Rate Sampling Data	31
4-4	O_2 Sensor Data - 50/Sec vs. 1/Sec	31
4-5	MAT and Sensor Voltage	35
5-1	Circuitry for SES Light and O_2 Sensor Disconnection	37
5-2	Voltage Divider	38
5-3	Cruise Control, Data Sampling @ 4 Htrz	41
5-4	Cruise Control, Data Sampling @ 4 Hrtz, Expanded Scale	41
5-5	Manual Throttle Control, Data Sampling @ 4 Htrz	43
5-6	Manual Throttle Control, Data Sampling @ 4 Hrtz, Expanded Scale	43
6-1	Test of Grade Measurements	47
6-2	Grade vs. Distance for Sample Route	50
6-3	USGS 7.5′ Topographic Map Excerpts from the La Habra and Whittier Quadrangles in the Vicinity of the Sample Route	51
6-4	Comparison of Grade Measurements	53
7-1	Layout of Exhaust Gas Analyzer Installed the Lumina	55
8-1	Demonstration Drive Time-Speed Trace	61
8-2	Time-Speed-CO% Trace, Driver B	62
8-3	Time-Speed-CO% Trace, Driver C-1	63
8-4	Time-Speed-CO% Trace, Driver B* (O_2 sensor disconnected)	63
8-5	Time-Speed-CO Trace, Driver B	64
8-6	Time-Speed-CO Trace, Driver C-1	65
8-7	Time-Speed-CO Trace, Driver B* (O_2 sensor disconnected)	65

List of Tables

Table		page
2-1	Signals Measured in the Lumina	10
2-2	System Support Files on SRAM Boot Drive C:\	13
3-1	Part A - Analog Input Channels	16
	Part B - Digital and Calculated Channels	17
	Part C - Other Input Channels	18
5-1	High Sampling Rate Data from Throttle Position Sensor	40
8-1	Summary of Lumina Drives with Emissions Data	66

Provided Under Separate Cover

80386 Mother Board User's Manual

Description of Power Supply

Everex I/O Board Manual

ROMDISK (SRAM) documentation

Metrabyte DAS-8 User Manual

Datalux LCD Screen Specifications and Instructions

SIIG Keyboard Instructions

Labtech Control User Manual

Labtech Control Reference Manual

Software and sample datasets (on floppy disk)

1991 Chevrolet Lumina Service Manual and Attachments

"Operators Training Guide" for PGA9000 4-gas analyzer, MPSI, 1990.

Floppy disks containing sample datasets, Labtech Control setups, CVT file convert program, FORTRAN program "LUMINA_EMIS.FOR.

1. INTRODUCTION

Vehicle emissions strongly depend upon operating conditions. However, recent evidence from a variety of investigations[1,2*] suggests that the "LA4" driving cycle, which is part of the Federal Test Procedure and has served as the basis for measuring exhaust emissions from light-duty vehicles since the 1972 model year, may not be representative of current driving patterns. Accordingly, the development of a more representative emission test cycle is of interest to both federal and California regulatory authorities.

Among the techniques being used by investigators to document current driving patterns are instrumented chase cars, including some equipped with a laser rangefinder[3], and instrumented vehicles. This report describes the development of a vehicle that has been instrumented to collect on-road vehicle operating and emissions data in support of driving cycle studies. The report is also intended to serve as a technical manual to describe the hardware and software installed in the instrumented vehicle.

The instrumented vehicle is a 1991 model Chevrolet Lumina with a 3.1 L engine, factory-equipped for variable fuel operation. The vehicle was originally loaned to Sierra Research, Inc. (Sierra) by the Mobile Source Division (MSD) of the Air Resources Board (ARB) to serve as a "target" vehicle for Sierra's "chase car" that is equipped with a laser rangefinder. To assist in the development of the hardware and software used with the chase car, the Lumina was originally equipped with a relatively simple system for collecting second-by-second speed data and manifold air pressure using a laptop computer operated by a passenger in the vehicle. Labtech Control, a commercial data program, was used for data logging and display.

After the development of the chase car, Sierra was awarded Contract No. A-096-214, a task order contract for "Emissions Inventory Projects", under which the Lumina was modified for more comprehensive data collection. (This report covers work performed under Tasks 1 and 4 of the contract.). In addition to collecting additional data, Sierra also sought to improve the reliability and operational simplicity of the data acquisition system to facilitate routine use by untrained personnel. To this end, the vehicle has been instrumented with an augmented data acquisition system and instruments to measure and record key aspects of the vehicle's operation, including exhaust concentration measurements. The following parameters are measured and recorded on a second-by-second basis: vehicle speed, manifold air pressure sensor voltage, engine RPM,

---

* Superscripts denote references provided in Section 9.

throttle position sensor voltage, manifold air temperature sensor voltage and coolant temperature sensor voltage. The system can be configured to record gear shifting of the automatic transmission, state of the "service engine soon" (SES) light and, in a semiautomated approach used at engine startup, the state of any fault codes stored in the vehicle's electronic control unit. Lateral and longitudinal acceleration and oxygen sensor voltage are measured at 10 hertz (to better reflect these rapidly varying signals) and readings are averaged and stored at 1 hertz. With the exception of the added accelerometers and equipment for measurement of exhaust gas concentrations, the system samples data exclusively from OEM system sensors.

The data acquisition system operates automatically without operator attention, following start-up of the vehicle ignition. The data acquisition system includes an 80386-based, DOS-compatible computer with a custom-modified power supply and start-up circuitry, a 7 MB battery-backed static RAM card (for computer start-up and data collection without mechanical disks) which is approximately doubled (to 14 MB) using software-based data compression, an IBM PC-compatible analog-to-digital converter/digital counter board and custom accessory box and a commercial data acquisition program, Labtech Control. While not required in normal data collection, the system can be operated with a VGA liquid crystal video monitor (included) for real-time display of most data. A keyboard and mechanical floppy disk drive are included with the system and can be used for data/program exchange.

The remaining sections of this report describe in greater detail the computer-based data acquisition system, connections to OEM sensors and other sensors whose output signals are sampled, and sample results that illustrate system operation and performance. Particular attention is devoted to the road grade and mass emission rates of exhaust pollutants, both of which may be calculated from measured parameters. Results from special-purpose test runs and experiments are also presented and discussed. Copies of pertinent product manuals and software are provided under separate cover.

2. COMPUTER SYSTEM

2.1 General Description

Following the demonstration of a relatively simple laptop computer-based data acquisition system to collect vehicle speed data, the following design specifications were developed for an enhanced onboard data acquisition system:

- capability to operate from the vehicle's power supply (or from a secondary battery that is powered by the vehicle's electrical supply);
- sufficient microprocessor speed and memory to support moderate-speed data acquisition (rates up to 100 hertz for diagnostic runs of individual sensors) and typical data collection rates of 1 hertz or more for multiple analog and digital channels;
- system compatibility with the widest range of optional software and hardware choices;
- capability to bootstrap the system upon vehicle start-up, thereby avoiding the need to have the computer system operate while the vehicle is not in use;
- capability to situate the system unobtrusively within the vehicle, possibly under a seat or in the trunk;
- capability to export data from the system (both to retrieve data in a computer-readable format such as floppy disk and to display real-time data when needed for diagnostic purposes) and to import programs and data to the system (e.g., to revise data acquisition set-ups, delete old files, etc.);
- flexibility and possible expansion for future uses, potentially including on-road exhaust measurements (already added), data exchange by radio transponder[4,5] (fully provided for) and an automated vehicle locating system (investigated[6] but not added); and
- economy.

In addition to the above requirements, the following features, if feasible, were deemed to be valuable additions:

- capability to collect data and store it in a non-volatile medium while the vehicle was operating, without requiring the use of moving parts (such as mechanical disk drives) that could be subject to problems due to vibration or other environmental insults;

- capability to provide the aforementioned bootstrap operation without mechanical disk drives; and

- capability to operate with or without a keyboard attached and with or without a display device (such as a monochrome LSC display).

An MS-DOS compatible microprocessor board, Model CY-313 with multiple plug-in slots, was selected as the platform for an onboard data acquisition system that best met all of the above requirements. (A copy of the User's Manual for the CY-313 is provided under separate cover.) This machine is a generic off-the-shelf 386/25 PC. Based on experience using laptop computer-based data acquisition systems having either 80286 or 80386 microprocessors, with or without math co-processors, it was determined originally that an 80386 microprocessor without a co-processor and operating at a clock speed of 25 megahertz (in "turbo" mode) would provide adequate speed to support the rates of data acquisition needed. However, with the later addition of an exhaust gas analyzer, an upgrade to version 6.0 of DOS, and implementation of software data compression under DOS, it was found desirable to add an 80387 coprocessor and additional memory to enhance the speed and power of the on-board computer. The computer system chosen uses surface mount technology for high performance and reliability and it provides six 8-bit (PC type) expansion slots and four 16-bit (AT type) expansion slots, all full-length. Onboard memory is 4 megabytes RAM, expandable to 8 megabytes. The system is housed in a standard "AT-size" computer case and installed in the trunk of the vehicle.

The microprocessor mother board and the remainder of the data acquisition system are powered by a custom power supply system. Four plug-in boards (included with the system) provide the specialized functions needed to meet the remainder of the project's mandatory and optional design objectives, except for exhaust gas concentration measurement, which is provided by a separate instrument. The hardware systems and the software used for system control and data acquisition are described in greater detail in the remainder of this section.

2.2 Power Supply and Startup System

One important consideration in designing the onboard data acquisition system was the ability to ensure a reliable source of stable, uninterrupted power to the computer system when the vehicle is operating and to use an associated signal from the vehicle starting system to power-up and start the data acquisition system. This was accomplished through the use of an off-the-shelf uninterruptible power supply that

was custom-modified, installed in the computer case in the vehicle's trunk, and then wired to the vehicle's power supply through a custom-designed start-up circuit, comprised of a conventional relay and special time-delay relay.

The main element of the power supply system is a computer power supply sold by PC Power and Cooling, Inner Source Model 2210, AT/386 Power Supply/UPS (uninterruptible power supply) which has been modified in several ways. In its normal mode of operation, this power supply accepts an AC input voltage of 110 volts (nominal) and provides as output regulated voltages of plus and minus 5 volts DC and plus and minus 12 volts DC at current levels sufficient to support a typical desktop computer. When AC input voltage fails, the system provides an uninterruptible source of power from a 12-volt lead acid battery which may be mounted internally or externally. During AC power failure, the system continues to provide 110 volts AC power output (under battery operation), which is intended to power a standard monochrome video monitor. (This was not necessary for the Lumina, as its LCD screen is powered from the PC.)

While the UPS was designed to use 12 volts DC as a backup power supply rather than its primary power supply, discussions with PC Power and Cooling confirmed that the UPS could be operated with a 12-volt DC supply as its primary power source. PC Power and Cooling provided a supply designed for external battery connection and for "autoboot" operation, i.e., the computer would start up as soon as 12 volts DC was applied to the power supply. However, it was learned after delivery that the power supply provided would not autoboot unless 110 volts AC was applied and then disconnected immediately prior to application of 12 volts DC. Accordingly, it was necessary to modify the power supply circuit.

Modifications were made as suggested by PC Power and Cooling. Several iterations were performed to find the appropriate values of certain circuit components. The final choice of components is shown in PC Power and Cooling's partial circuit sketch, provided under separate cover, as modified following experimental trials. The modifications involved opening the case of the power supply, removing one capacitor and one resistor, installing a second capacitor with a resistor mounted in parallel across it, and installing a second resistor.

With these modifications, the computer was found to boot properly when 12 volts DC power was applied, regardless of whether 110 volts AC power had been applied immediately before the 12 volt power. One minor exception was discovered for this otherwise fully successful circuit modification. If 12-volt DC power is supplied, then interrupted for two seconds or less and immediately reapplied, the computer will not boot. However, with the time delay start-up circuitry described below, this is not a problem.

Installation of power supply wiring from the vehicle's engine compartment to the trunk was performed under subcontract by LEHR Automotive Electronics of Sacramento, California. The wiring layout was designed and installed by LEHR. Supply wiring provides the trunk area with constant 12 DC power from the vehicle power system through a 30 amp

fuse. A relay control line is powered at 12 volts DC only when the ignition switch is ON (i.e., engine ON or accessories ON), but not while the engine is cranking. The control relay was installed by LEHR on the rear deck in the vicinity of the rear speakers. A difficulty was immediately encountered with this system, however, in that normal engine start-up, which often requires less than two seconds of cranking, didn't result in computer bootup, due to the previously mentioned limitation of the power supply bootup circuit. The following custom circuit modification was made to avoid this problem.

A variable time delay 12 volt relay (IDEC Electronic Timer, Type RTE P11, 12 VAC/DC) was installed in series with the control relay in the computer start-up circuit. Physically, the variable time delay relay is mounted in a socket in the trunk compartment on the metal support behind the back seat. The resulting circuit, which has worked reliably and consistently in hundreds of starts, is shown in Figure 2-1. The time delay relay, which is variable and can be set over a range from about one second to ten hours, is normally set at two seconds. The circuit is activated by turning the ignition key and starting the car in a normal fashion (the main power switch of the computer must, of course, be left switched to the ON position for automatic bootup and data acquisition to occur).

Figure 2-1

Startup Power Supply Circuit

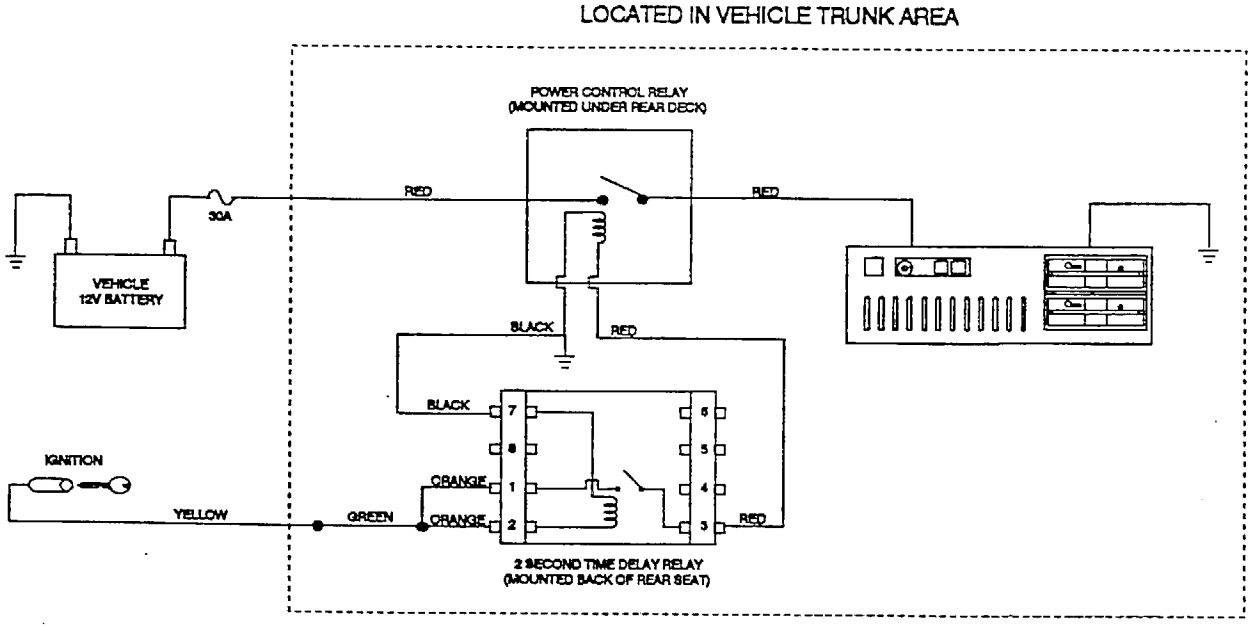

As the car's ignition key is turned from the OFF position through the ignition ON position to the crank position, the power applied to the time delay relay goes from zero to 12 volts, and then back to zero. Because the key is typically in the ignition ON position much less than two seconds (normally only a fraction of a second), the time delay relay does not trip during this time. Furthermore, no matter how long the key is held in the crank position, the time delay relay will not trip since power is not applied to it when the key is in the crank position. In normal start-up, the key is released from the crank position to the ignition ON position, which again sends power to the time delay relay, starting a new two-second time delay period. At the end of that period, i.e., about two seconds after the engine starts, the time delay relay trips, which instantly trips the second relay, sending power to the computer which then begins to autoboot. An additional feature of this system is that the computer may be booted without starting the engine simply by turning the key to the ignition ON position and waiting two seconds for autoboot to commence.

It should be noted that whether the computer's power supply is switched ON or not, a loud "click" from the computer power-on relay (the time delay relay is silent) can be easily heard in the passenger compartment two seconds after the key is turned to the ignition on position or two seconds after start of the engine. This is normal and will be heard whether or not the computer is switched ON. While time delays longer or shorter than two seconds may be easily set by twisting the time delay setting knob on the time delay relay, two seconds is a satisfactory compromise. Repeated trials have shown that two seconds provides enough time to avoid false starts (such as might occur with slow turning of the ignition key through the accessory position), while resulting in an acceptably small incremental addition of time to the start of data collection.

Finally, the computer can be operated from normal 110 volt AC power by unplugging it and removing it from the vehicle and plugging it into a normal wall outlet. To unplug the power connections to the computer, it is necessary to remove the computer's case. All other connections to the computer can be removed by unplugging connections to the rear panel of the computer.

2.3 Static RAM Board

Previous efforts to collect and store data using instrumented vehicles have shown that vibrations and hard acceleration/deceleration can cause failure of mechanical disk based data storage systems, whether based on floppy disk or hard disk. This problem has been avoided in the Lumina by using a solid-state plug-in Random Access Memory (RAM) card that allows for storage of data without disk drives, i.e., no vibration-intolerant read/write heads. However, typical RAM cards contain volatile memory, i.e., they lose all data when the computer, and therefore the plug-in computer-powered RAM cards, are turned off. RAM cards are also susceptible to complete loss of data if the computer's power supply fails, even momentarily.

Because the instrumented vehicle was intended to collect data over multiple runs comprising numerous hours of driving, it was felt that the potential loss of data due to the use of either vibration-intolerant mechanical disk drives or non-volatile RAM memory presented an excessive risk. To mitigate this risk, the data acquisition system was equipped with a solid-state battery-backed Static RAM card, or SRAM (Curtis Inc., Model PCF-1[7]).

The Curtis SRAM is an accessory disk emulator board for industry standard architecture (ISA) bus computers. As a plug-in board, it functions identically to a conventional RAM card when the computer is operating. However, when the computer is not providing power to the SRAM, for whatever reason (computer failure, power supply failure, vehicle and computer shutdown, etc.), the SRAM memory is continually maintained in a low-power state by means of a small lithium battery mounted on the SRAM board. This onboard battery system allows the SRAM board to function as a non-volatile memory, while providing an important advantage over mechanical disk drives in that no moving parts are required. Because it is non-volatile memory, Curtis describes the PCF-1 (and other similar products of theirs) as a "ROMDISK," which stands for Read Only Memory disk.

The SRAM board sold by Curtis Inc. may be configured with up to 7 megabytes of RAM integrated circuit chips, which is the configuration currently used in the Lumina. Through software provided initially by Curtis*, the 7 megabytes of static RAM required partitioning into two drives, designated as A: and C:. However, a recent upgrade in the microcode ROM chip for the RAM board now allows the device to be seen by DOS as a standard fixed disk designated as C:. Consequently, all DOS boot-critical files are stored on the ROMDISK. The system has no hard drive. Instead, the C: drive is used to store all needed utility programs, the data acquisition program, collected data and the operating system. For convenience, the data acqusition program is normally configured to store data in a subdirectory designated "C:\data."

As configured, the system contains only one other disk drive, a high density, 3½ inch mechanical floppy disk drive. This 1.44 megabyte disk drive is designated as drive "A:" immediately upon start-up, but its designation is converted by the startup software to drive "B:" when the system boot is complete. This drive is not used for system start-up or in normal data collection. Rather, it is intended to be used only to transfer data, data acquisition "setups", or other programs to and from the computer system. This mechanical drive may, of course, be used for data collection while the vehicle is operating by designating "B:\" as the drive path for the data file to be saved. (This designation would be made in the data acquisition program's setup file, as discussed later.) However, this option is not recommended unless additional cushioning is provided for the mechanical drive to avoid possible read/write head damage or data loss due to vehicle vibration. In addition, if the mechanical disk drive is to be used for data collection, rather than simply for data and program exchange as intended, it is recommended that steps be taken to ensure that

---

* Copies of all software are provided under separate cover.

temperature variations (both high and low) or occurrences of high relative humidity in the trunk do not compromise the reliability of disk reading or writing or cause damage to diskette media. (Temperatures as high as 107°F have been measured in the vehicle's trunk during the current project. Higher trunk temperatures would be expected in California's Central Valley on summer days where the outside temperature sometimes exceeds 100°F. Also, the use of mechanical disk drives, as with most magnetic read/write equipment, is not compatible with condensing conditions, i.e., cold surfaces and relatively warm, moist air.)

2.4 Analog-to-Digital Converter and Counter Board

This section provides detail on the configuration of the analog-to-digital converter board used in the data acquisition system and it provides an introduction to the various sensors and signals that are readily available for measurement. Later sections of this report provide additional detail on OEM sensors (Section 4), measurement of other OEM inputs (Section 5), accelerometers (Section 6) and exhaust gas measurements (Section 7).

All of the electrical signals from the Lumina that are to be measured, as listed in Table 2-1, are present either as analog or digital voltages or, in the case of exhaust gas concentrations, as a high-speed serial digital data stream. The first ten signals listed in the table originate from OEM sensors on the vehicle and are sampled by connections to the wiring harness of the vehicle's Electronic Control Unit (ECU). The last three signals are present as a result of add-on equipment.

The first four OEM sensors that are listed in the table offer a variable resistance as the sensed value varies. Using a voltage divider and reference voltage, the vehicle's electronic control module, or ECM, converts the variable resistance to a variable voltage, which is measured by means of the analog-to-digital converter board. The fifth signal is an analog voltage provided by a residual oxygen sensor in the vehicle's exhaust system. This sensor is an electrochemical cell that directly generates a DC voltage that can be read by a high impedance voltmeter (see Section 4.5). Additional analog signals originate from the add-on accelerometer package and from a custom frequency-to-voltage converter board (described later in this report) which is used to convert digital pulses from the OEM speed sensor to an analog voltage.

In addition to the analog voltages available for external measurement, the ECM provides several digital outputs which switch between 0 and 12 volts. These include the "service engine soon" (SES) indicator and each of three gear change controllers (for 2nd, 3rd and 4th gears). All of the 12 volt digital channels have been scaled to approximately 4 volts by means of separate voltage dividers, each consisting of one 10k ohm resistor and one 22k ohm resistor. The outputs from these voltage dividers provide the TTL (transistor-transistor-logic) level signals that are required by the digital input channels of the A/D board. Lastly, the OEM signal line for distributor pulse reference is sampled

Table 2-1

Signals Measured in the Lumina

Signal	Sensor	Voltage Range of Signal
Manifold air pressure (MAP)	OEM	0-5 (analog)
Throttle position sensor	OEM	0-5 (analog)
Manifold temperature sensor	OEM	0-5 (analog)
Coolant temperature	OEM	0-5 (analog)
Oxygen sensor output	OEM	0.1-0.9 (analog)
Service engine soon indicator	OEM	0 or 12 (digital)
Gear changes:		
2nd gear	OEM	0 or 12 (digital)
3rd gear	OEM	0 or 12 (digital)
4th gear	OEM	0 or 12 (digital)
Distributor pulse reference (used to determine RPM)	OEM	0 or 12 (digital)
Speed, from frequency-to-voltage converter board	OEM/Add-on	0-5 (analog)
Accelerometers:		
longitudinal	Add-on	1.25-3.75 (analog)
lateral	Add-on	1.25-3.75 (analog)
Exhaust concentrations	Add-on	serial interface

and the frequency of pulses is measured to infer engine speed, which is converted to RPM (revolutions per minute) for display and data logging.

A four-gas analyzer (MPSI, Model PGA9000) is used to measure exhaust concentrations. The data stream from this analyzer is read by the data logger via an RS232C serial interface. The gas analyzer is discussed further in Section 7.

Altogether there are eight analog signals, five digital signals, and one serial data stream available for sampling, analysis and (in most cases) display.

Before any of the analog signals can be stored by the data acquisition system, analog voltages must be measured and digitized. This is accomplished through the use of a plug-in analog-to-digital A/D converter board (Keithley Metrabyte, Model DAS-8).

The DAS-8 A/D board[8] chosen for this application contains eight analog input channels and is expandable, with add-on hardware, to 128 channels. The inputs are single-ended (i.e., all voltages are measured with respect to one common ground). Voltage input ranges are fixed at -5 to +5 volts. Voltage measurement is performed through high-speed successive approximation, to a resolution of 12 bits (2.4 millivolts per bit) with a nominal accuracy of 0.01% of reading (plus or minus one bit). Conversion time is 35 microseconds (maximum) and 25 microseconds (typical). Input resistance is 10 megohms, making it suitable even for easily overloaded circuits, such as voltage measurement across the oxygen sensor[9], which requires very high input resistance.

In addition to providing A/D conversion for analog signals, the DAS-8 provides for sampling and counting of three channels of Transistor-Transistor-Logic (TTL) level digital signals and several "clock" or counting channels. In the current application, the latter feature is used to count pulses from the "distributor pulse reference signal" which is available at the wiring harness of the vehicle's electronic control module (ECM). Digital inputs are used to detect the state of the SES indicator and, to the extent digital input channels are available, to detect gear changes. (Measurement of gear changes was not specified in the system design, but was included because it can be useful to evaluate shift logic and it was available at no additional expense.)

Operations of the DAS-8 card are controlled second-by-second by the data acquisition software which is set up as described in Section 3 of this report.

For simple data collection, all data input to the A/D board are entered into the data logging computer under the control of the data acquisition program. In some instances, it may also be desirable to output data through the A/D board, which provides for up to four digital output channels. One of these channels has been configured to directly drive the coil of a TTL-compatible (5 volt) reed relay whenever the check engine light is off but data acquisition is occurring. This digital output channel and manual cutoff of the output from the oxygen sensor are discussed further in Section 5.

2.5 Software and Setups for Autoboot/Autostart Operation

The SRAM has been partitioned to appear as a single disk. Standard DOS commands were used to create the partition (FDISK and FORMAT). A brief description of the contents and function of the files stored on the disk is provided below.

The root directory (C:\) and the DOS directory contain key files necessary for the computer to function properly. This part of the SRAM contains config.sys and autoexec.bat files and the several virtual device interface files and other files required to support autoboot mode of operation. Configuration of all of these files is documented in the User's Manual for the SRAM[7], in the User Guide[10] and Reference Manual[11] for Labtech Control, and in the User's Guide and Reference to MS-DOS[12]. The files on this boot drive are listed and described briefly in

Table 2-2. Depending on the product used to view them, some of the files may not appear on a DIR listing as they are designated by DOS as 'hidden' files. Not being able to view the file listing does not negate its existence.

Drive A: is the designation for the mechanical drive used for data/program exchange.

Drive C: serves as the home for all files. Thus, drive C: contains the computer's operating system, which is MS-DOS Version 6.0; all files associated with MS-DOS except, as noted previously, those files required for autobooting; Labtech Control, the data acquisition program (referred to hereafter as "Control"), along with Control's numerous associated data and setup files; and several additional utility files that are not associated with Control.

In the event that system or program setup is lost (due, for example, to backup battery failure or hardware failure), the system and the Control program may be reconfigured using the user manuals provided, or by referring to Appendices A and B, which include instructions for system setup. For both the disk configuration and the Control installation, much of the setup has been automated in order to reduce the number of steps that must be carried out manually.

2.6 Serial, Parallel and Video Ports and Keyboard

Several plug-in cards have been installed in the on-board computer to provide additional functions.

An input/output, or I/O, board (Everex, Model EV-170A) has been provided to allow communication with serial devices, such as the four-gas analyzer, that utilize an RS232C serial interface port. With a mode statement in the config.sys file, one of the serial ports on this board is configured as COM1, a 2400 baud serial interface. One additional serial interface port on this board is available for future use, along with one parallel interface port. Either of these could be used with a suitable (i.e. serial/parallel) portable printer, if desired, or possibly with a vehicle navigation system or laser rangefinder.

If a video monitor is used in the car, a video driver board must be used in the computer. The monochrome VGA LCD screen provided (Datalux, Model ML, Liquid Crystal Display Monitor with custom length cable) is mounted in the passenger compartment and is attached to a dedicated video driver board, also from Datalux. The video driver board includes a connector for an optional external VGA monitor (not provided) which could, if desired, be mounted in the trunk to facilitate data or program exchange via floppy disk. The Datalux LCD monitor is powered through the same custom-length cable that is attached to the controller board in the PC in the trunk of the vehicle.

Table 2-2

System Support Files on SRAM Boot Drive C:\

File Name	Purpose of the File
Autoexec.bat	Executable DOS batch file that defines characteristics of devices connected to the system.
Autoexec.ok	Backup file for the above.
CGI.CFG	Used by LT/Control to configure the video display.
CGISTUB.SYS	Used by LT/Control to configure the video display.
COMMAND.COM	DOS command interpreter - critical operating system file.
CONFIG.SYS	MS-DOS file that "contains a group of commands that load installable device drivers and reserve space in system memory for information processing"[12]; these commands are carried out before Autoexec.bat is executed.
CONFIG.OK	Backup file for the above.
DBLSPACE.BIN	DOS file used when disk compression is in use.
DRIVERS.EXE	MS-DOS loadable device driver. This is required for LT/Control to install the VGA video driver.
GSSCGI.SYS	Used by LT/Control to read the contents of CGI.CFG.
IBMVGA12.SYS	LT/Control VGA screen driver.
INFO.TXT	Created by LT/Control during installation. Contains information about the installation relevant for troubleshooting.
IO.SYS	The first of two "hidden" MS-DOS system files needed to make the operating system function.
MSDOS.SYS	The second of two "hidden" MS-DOS system files needed to make the operating system function.
NAME.INF	Created by LT/Control during installation. Contains software serial number.
PCFSETUP.EXE	Software provided by Curtis with static RAM board to initialize the board to look like a C: hard disk and accept DOS commands.

The on-board computer has been equipped with a full-featured, compact keyboard (SIIG, Inc., Enhanced Keyboard, Suntouch Jr.), which has been located, for convenience, in the passenger compartment. This keyboard could, alternatively, be operated from the trunk area by removing the keyboard extension cable and relocating the keyboard to the trunk.

As configured in the default CMOS settings of the computer, neither the display device (LCD screen or optional VGA screen) nor the keyboard is required to be installed in order to operate the data acquisition system in the car, provided that the data acquisition system is set to startup without a keypress (this is an optional input in Control's "INSTALL" menu.)

3. DATA ACQUISITION USING LABTECH CONTROL

3.1 Data Blocks

The data acquisition system has been configured to operate under Labtech Control (Laboratory Technologies Corporation) Level I, Version 4.1.1, which performs the following functions: controls the Metrabyte DAS-8 A/D board second-by-second; performs simple adjustments to raw data for convenient offsets and scaling to engineering units; displays scaled data in real time, if desired; provides logical flow control for the data stream and records exhaust concentration data provided via the serial interface port; and records all data. "Control" is menu-driven and can be configured for alternative setups, with each saved under a separate name.

For most of the routine data collection performed with the Lumina, two standard setups have been used, LUMGAS and LUMSES. LUMGAS provides for data storage of most engine parameters and includes storage of the data stream from the exhaust gas analyzer. LUMSES does not provide for recording of gas concentrations, but does provide for reading and storing information on stored fault codes. LUMSES is described in some detail in this section to provide an illustration of the use of Labtech Control. Features and requirements specific to LUMGAS are discussed further in Section 7, which describes the system for exhaust gas concentration measurement.

LUMSES, like other Control setups, consists of four ASCII or text files which are saved on drive C: in subdirectory "c:\LTC\LUMSES." "SES" in the subdirectory name refers to the fact that this setup is used to provide data on status of the "service engine soon" output from the electronic control module (ECM).

The specifications for LUMSES are shown in Table 3-1. For ease of comparison, the table has been constructed in a form that closely parallels the setup menu as it is displayed on the CRT when running Control, except that in the table blocks are not listed in strict numerical order (as they are on the screen when running Control.) Instead, blocks are shown in groups, depending on their use. Group A describes only analog input channels; Group B describes time, frequency and certain calculated channels; and Group C describes all other channels (serial and digital input channels). Parameters are listed in the first column and settings for each block or channel are listed in each of the following columns. A brief description of each of the parameters listed in Table 3-1 follows.

Table 3-1
Group A-Analog Input Channels

Standard Setup for Labtech Control as Used
for Data Acquisition in an Instrumented Vehicle

Total Number of Blocks 20 (This includes Parts A, B and C of this table.)

Block	01	02	03	04	05	06	18	19
Signal type	<———			Analog				———>
Tag name	longit. accel	later accel	speed	MAP	O_2 sensor	throttle position	coolant temp	MAT
Units	g's	g's	mph	kPa	vlts	vlts	vlts	vlts
Device	<———			DAS-8				———>
Input no.	00	01	02	03	04	05	06	07
Input	<———			plus/minus 5 volts				———>
Scale fact.	0.8	0.8	19.941	18.969	1.0	1.0	1.0	1.0
Offset	-2.560	-2.425	0.2074	0.3995	0.0	0.0	0.0	0.0
Buffer	512	512	512	512	1024	512	512	512
Iterations	<———			1				———>
Stages	<———			1				———>
Sampling rate (hrtz)	10	10	1	1	10	1	1	1
Stage duration	<———			10**6				———>

Note: See text and Labtech Control manuals for a more detailed explanation of parameters.

Table 3-1
Group B-Digital and Calculated Channels

Standard Setup for Labtech Control as Used
for Data Acquisition in an Instrumented Vehicle

Number of channels 20 (total)

Block	07	08	09	10	11	12	13	14	16
Signal type	time	time	calc	calc	calc	freq	calc	time	time
Tag name	duration secs	cumtime secs	long g's	lat g's	avg O_2 vlts	eng PPS	eng RPM	clock time	durat secs
Time origin	elapsed	(TOD)	–	–	–	–	–	(TOD)	(TOD)
Channel type	–	–	block avg	block avg	block avg	DAS-8 Counter1	[X]	–	–
Computed channel inputs:									
x	–	–	1	2	5	–	12	–	–
y	–	–	1	1	1	–	1	–	–
r	–	–	10	10	10	–	1	–	–
scale factor	–	–	1.0	1.0	1.0	–	20	–	–
offsets	–	–	0	0	0	–	0	–	–
Format	SSSSS.SSS	SSSSS.SSS	–	–	–	–	–	HHMMSS SSSSS.SSS	
Mode	cumul	cumul	–	–	–	–	–	cumul	cumul
Alarms	<——not used——>								
Buffer size	512	512	512	512	1024	1024	1024	512	512 512
Iterations	<——1——>								
Stages	<——1——>								
Duration Start/stop Triggers	<——not used——>								
Sampling freq (hrtz)	1	1	1	1	1	1	1	1	1 4

Notes:
See text and Labtech Control manuals for an explanation of parameters.
"TOD" = time of day.
"Cumtime" = the length of time since midnight, in seconds.
"Duration" = the number of seconds from start of run to present.
"PPS" = pulses per second, the frequency of pulses on the distributor pulse reference signal. One pulse is generated with each spark plug firing.

Table 3-1
Group C-Other Input Channels

Standard Setup for Labtech Control as Used
for Data Acquisition in an Instrumented Vehicle

Number of channels	20 (total)		
Block	15	17	20
Block type	[RS232]	digital input	digital output
Tag name	gases	service engine soon light	service engine soon relay
Units	ppm or %	–	–
Com port	1	–	–
Mode	[parsed]	–	–
Parsed start	1	–	–
Parsed end	5	–	–
Initialization	–	–	–
Prompt	B	–	–
Scale Factor	1.000	–	–
Offset	0.000	–	–
Interface Device	–	[0:DAS-8]	[0:Das-8]
Channel	–	0	0
Select bit	–	[yes]	[yes]
Bit no.	–	0	0
Alarms	<——not used——>		
Buffer size	4096	512	512
Iterations	<——1——>		
Stages	<——1——>		
Duration Start/stop Triggers	<——not used——>		
Sampling freq (hrtz)	4	1	1

Note: See text and Labtech Control manuals for an explanation of parameters.

In all three parts of Table 3-1, each "block" or channel defines a variable. All eight channels listed in Part A of the table have analog inputs as measured by the DAS-8 A/D board. These are the same inputs that were introduced briefly in Section 2.4 of this report. "Channel names" and "engineering units" are self-explanatory. "Scale factors" and offsets as shown in the table are used by Control to convert measured voltages to the engineering units shown. For example, the manifold air pressure sensor uses the following calibration equation which relates voltage measurement and manifold pressure, expressed in kiloPascals :

$$\text{kPa} = 7.5787 + 18.969 \text{ X (MAP sensor volts)}$$

In this case, the coefficient, 18.969 kPa/volt, is the scale factor. (The derivations of this and other calibration equations for each sensor are described in more detail in Section 4.)

"Offset" is the voltage correction needed to produce a zero reading when no signal is present. In this case, the offset, expressed in units of volts, is as follows:

$$\text{offset} = \frac{7.5787 \text{ kPa}}{18.969 \text{ kPa/volt}} = 0.3995$$

For accelerometers, offsets have been chosen such that longitudinal and lateral acceleration read 0.00 g plus or minus about 0.01 g (one-minute average of values when at rest on a level surface), when there is a driver in the vehicle but no passengers or extra weight and the fuel tank is about half-full. For vehicle speed measurement, an offset value is selected to provide a readout for speed of zero mph plus or minus about 0.1 mph when the vehicle is at rest. The use and revision of scale factors and offsets is described further in the Control user and reference manuals.

The remaining parameters listed in Part A have been set to convenient values that work satisfactorily and should not require change unless indicated by Control error codes. It should be noted that accelerometer values and oxygen (O_2) sensor voltages, while sampled and measured at 10 hertz (10 times per second), are averaged over one second by Control (using a "calculated channel") and stored at 1 hertz. The purpose of this averaging is to obtain values to be saved at a rate of 1 hertz, but to have those values reflect an average over the entire one-second period (actually the average of ten samples taken over the one-second interval), rather than a "snapshot" over one 25 microsecond interval. In principle, a sampling rate higher than 10 hertz could have been used to obtain an even closer approximation to the true average over one second. However, routine sampling rates higher than 10 hertz were found to overtax the computer throughput or place excessive demands on computer memory, due to the numerous channels of data being collected and calculated. Additional discussion of sampling rates may be found later in this report in the discussions of O_2 sensor measurements (Section 4.5) and accelerometer measurements.

A detailed description of all the parameters may be found in Labtech's User Manual and Reference Manual. Briefly, the functions of the blocks in Group B and C of Table 3-1 are as follows:

Blocks in Group B of Table 3-1

Block 7 – provides a time stamp each second, expressed as seconds from the start of the run

Block 8 – provides a time stamp each second, expressed in seconds, of cumulative seconds since midnight (although somewhat redundant, this is often helpful to fix the exact time of a particular sample)

Block 9 – uses each successive 10 measurements of longitudinal acceleration determined in block 1 (computer channel input x=1) to compute a one-second average of acceleration each second (note that unlike block 1, which has a frequency of 10 hertz, block 9 has a frequency of 1 hertz)

Block 10 – same as Block 9, but uses lateral acceleration measurements, sampled at 10 hertz from block 2, to calculate one-second averages of lateral acceleration

Block 11 – similar to the previous two blocks, computes once each second a block average of O_2 sensor data from block 5, which were collected at 10 hertz

Block 12 – this block functions as a pulse counter and provides, once each second, a measurement in hertz of the frequency of pulses input to counter point #1 on the DAS-8 board, which is from the distributor pulse reference count, i.e., a count of the number of spark plug firings over each second

Block 13 – a computed block that takes as input the frequency count from block 12 and scales it, dividing by 20, to provide a value for the engine speed, expressed in revolutions per minute, RPM

Block 14 – a time block that reads and displays the computer's clock time (it is often convenient to display both blocks 7 and 14 as a real-time "meter trace" on the CRT, as discussed later)

Block 16 – a time block that is identical to block 8, except that block 16 is sampled at 4 hertz (rather than 1 hertz) so that it may be used as a time stamp when logging concentration data (which are sampled and logged, in file 2, at 4 hertz)

Blocks in Group C of Table 3-1

Block 15 - a serial interface block that reads data from the serial interface buffer at a rate of 4 hertz. Data streaming to the serial input buffer are parsed by Control, using the equal sign (ASCII character "=", which has a decimal equivalent of 61) as an end-of-record delimiter, and interpreting columns 1 and 2 as the concentration of HC (ppm) if it is less than 100 ppm. (Concentrations of other gases may also be recorded using LUMGAS, as described in Section 7.)

Block 17 - digital input block used to read the signal, after scaling from 12 volts to 4 volts, from the vehicle's ECM that indicates illumination of the SES light on the dashboard

Block 18 - digital output block which is used to echo the SES light signal and to drive a TTL magnetic reed relay located in the glove compartment. The relay switch closure is used as a one-bit input to a radio transponder that can be mounted in the passenger compartment of the vehicle.

3.2 Saving, Displaying and Retrieving Data

In addition to measuring and counting, the data acquisition system provides for saving and displaying data. This section discusses these two functions.

As currently configured in LUMSES, all vehicle operating data are saved in a file, denoted F1 (for File 1), at a rate of 1 hertz or one record of data each second. All vehicle operating data can be displayed in near real time (approximately one-second refresh rate) if a fast video monitor is attached. Using the Datalux LCD screen, a refresh rate of about one to three seconds is achieved when using LUMSES.

A menu in Control is used to define the format of the file(s) to be saved. The file names will be of the form LDDMMS.PRN, where "L" indicates a Lumina file, "DD" and "MM" indicate calendar day and month, respectively, which are read automatically from the computer's clock, and "S" is a daily sequence number. The first file saved each day will have sequence number 0, the next will be number 1, etc. The suffix ".PRN" indicates that the data file is in ASCII format. Other parameters describing the format of the stored file may be found in Control's "FILES" and "SETUP" menus. It should also be noted that in addition to the logged data files that it creates, Control generates daily a small ASCII "housekeeping" file with the suffix ".VERS" to keep track of the sequence numbers for the day.

Each file is saved with a brief, four-line header that can be used to help identify the file (this can be easily modified in the setup menu if

desired). The header includes the date and time, read from the computer's clock/calendar, when the run began. Another useful indicator to help identify files is the DOS directory. Standard DOS directories show the date and time when each file was created. This time will, of course, be the time when the file was closed, i.e., the ending time for each run. Thus, each file includes a start time and date and an end time and date. In addition, as described below, each record of each file contains a second-by-second time stamp, marking clearly the time associated with each record. (An exception to this is exhaust gas concentration files that are stored as character files. As discussed in Section 7, no time stamp is available or needed for these.)

Not all blocks need to be saved. In fact, to do so would be wasteful of memory space on the SRAM. Furthermore, it is a requirement under Control that all blocks saved in the same file must have the same frequency of data, e.g., data collected at 10 hertz cannot be stored in the same file as data collected at 1 hertz. Thus, while some of the Lumina's sensors have been sampled at 10 hertz (such as the O_2 sensor), these blocks have subsequently been sampled again at 1 hertz using block-averaged channels to obtain one-second averages at a rate of 1 hertz, which is the basic time period used for data storage. Under LUMSES, the following blocks of data are saved once each second. Unless noted otherwise, samples are both measured and saved at 1 hertz. Blocks are listed in the order they appear in the output file.

- Block 9 — one-second averages of longitudinal acceleration (measured 10 hertz), in g's
- Block 10 — one-second averages of lateral acceleration (measured at 10 hertz), in g's
- Block 3 — average vehicle speed measured over each second, mph
- Block 4 — manifold absolute pressure (MAP) sensor voltage, in kiloPascals (1 atmosphere = 10^5 kiloPascals, therefore, this signal varies from about 0 to 100)
- Block 11 — one-second averages of oxygen sensor output voltage (measured at 10 hertz), volts
- Block 6 — throttle positions sensor voltage, volts
- Block 7 — time duration from start of the run, in seconds (this is the time stamp for each record)
- Block 8 — cumulative time since midnight, in seconds
- Block 13 — engine speed, RPM
- Block 17 — service engine soon (SES) light; this variable equals 0 when the SES light illuminates and 1 when the light extinguishes.

As currently configured under LUMSES, Control displays all of the above parameters with the exception of Block 8, cumulative time since midnight. For convenience, a different time block, Block 14, is displayed. This block shows clock time, derived from the computer's clock/calendar chip, displayed in a familiar hr:min:sec format. This is an example of a parameter that is calculated for display only and not saved. Note too that blocks that are used to sample data at 10 hertz are neither saved nor displayed with that frequency. Rather, they are used only as a first step to calculate parameters in other blocks with different time scales, scale factors, etc.

The computer's CMOS setups (i.e., the parameters stored in the computer's battery-backed memory, rather than Control's setups, which are stored in the battery-backed SRAM) have been configured to allow the computer to operate with or without a keyboard attached at start-up. It will usually be necessary to use a keyboard to download data from the data acquisition system or to change any setups. If desired, the keyboard (and/or monitor) can be removed at any or all other times to reduce the space demands of the data acquisition system.

To download data, quit from Labtech Control. The system will return to the DOS prompt ">". Press "CD \" and then "enter" to get to the root directory. Press "CD\DATA" and then "enter" to get the \DATA subdirectory where data files are stored. (This is the default location for storing data. It can be changed, if desired, using the OPTIONS in Control's INSTALL menu.) You should see a listing that contains two types of files, ".PRN" and ".VER". VER files are short text files that are used internally by Control to keep track of the current number of runs for a day. PRN files are the text files created by Control that contain acquired data. To download acquired data to a floppy disk, insert a pre-formatted, high-density (1.44 MB) diskette into the mechanical disk drive and then type "COPY NAME.PRN B:", where "NAME" is the name of the file of interest. If the SRAM drive is not too full, it may be convenient to download all data files to the floppy disk by typing the DOS wildcard copy command "COPY *.PRN B:".

Periodically, after copying of all needed data, the subdirectory "\DATA" of drive C: should be purged to free up space for data collection. This can be done by typing "DEL *.PRN" to delete only text files (which take up the most space) or "DEL *.*" to delete all files (i.e., both text files and the ".VER" files). During periods of routine data collection, it was found convenient to download files to floppy disk about once per week (or after about 10 hours of driving) using the wildcard copy command ("copy *.prn B:") and then to purge the subdirectory of all ".prn" files.

Finally, it should be noted that Labtech Control is proprietary software licensed by Labtech. The configured A/D system is provided separately, with one copy of Control stored in the SRAM. An archived copy of the software is also provided, along with other software and data.

4. DATA COLLECTION USING OEM SENSORS

4.1 General Description

Two basic approaches are possible when selecting sensors for instrumentation of a vehicle: use the OEM (original equipment manufacturer) sensors that were installed in the vehicle at the factory, or use add-on sensors. Add-on devices might be aftermarket parts that are designed to replace OEM parts, or they may be different kinds of sensors altogether, including general-purpose sensors, such as accelerometers. Experience has shown that vehicles can be successfully instrumented with a minimal risk of artifactual or otherwise faulty data by relying primarily on the use of OEM sensors. Accordingly, the current implementation relies upon using OEM sensors, where available, to generate electrical signals that are then measured by the data acquisition system. Only in the case of accelerometers and exhaust gas concentration measurements, where no OEM sensor was available, was an add-on sensor system used.

Signals from the OEM sensors in the vehicle have been accessed by removing the ECM and soldering signal pickup wires to the corresponding wires within its wiring harness. A schematic diagram identifying the color-coded wires of the ECM's wiring harness is shown in Appendix C-1. An 18-conductor cable, comprised of 9 twisted pairs, was installed in the vehicle by LEHR Automotive Electronics, to convey signals from the engine compartment to the trunk, where the data acquisition system is installed. The color coding for these twisted pair wires is shown (handwritten) in Appendix C-1. A wiring diagram that shows the pinouts for Molex-type 9 pin and 12 pin connectors used in the data acquisition system is shown in Appendix C-2.

For possible future use of a data acquisition system within the vehicle's passenger compartment, a second 18-conductor cable has been installed between the trunk and the glove compartment (this was convenient to do at the time of the installation of the first cable). The wiring diagram and connector pinouts for this multiconnector cable are shown in Appendix C-3. With this setup, connectors from the two 18-conductor cables can, if desired in the future, simply be plugged together in the trunk to provide signals from the engine compartment to the glove compartment for measurement or data acquisition there. To complement this, a second set of connectors in the trunk permits the accelerometer system, which is normally located in the passenger compartment near the front wheel axle, to be relocated to the trunk (see Section 5 of this report).

4.2 Speed Signal and Custom Conditioning Circuitry

The speed measurement approach used in the current effort entails sampling the pulse signal output from the OEM speed sensor that is located on the transmission housing of the chase vehicle, conditioning that output with a custom frequency-to-voltage converter circuit, and measuring the DC output from the circuit, which is a direct analog of speed.

The OEM speed sensor used in the Lumina operates on the principle of a permanent magnet speed sensor mounted in the transaxle[9]. This sensor generates an AC signal whose amplitude and frequency varies with speed. A custom speed circuit has been developed to convert the frequency variation into a variation in DC voltage which is then input to an analog measurement channel (block 3) of the A/D board. The frequency-to-analog voltage conversion circuit centers around the use of a frequency-to-voltage converter integrated circuit, number LM2907. External components have been selected in consideration of design limitations, primarily to minimize "ripple" voltage without causing excessive voltage "lag" at the output[13].

The circuit for measuring the vehicle's speed is calibrated by driving over a known distance and recording the digitized DC voltages generated by the circuit. In the calibration work conducted in Sacramento and Davis, the analog-to-digital conversion was performed with the DAS-8 A/D converter installed in a Packintell laptop computer running Labtech Control.

Calibration was performed at a nominal speed of 60 mph by driving over a highway route of known length, approximately 7.2 miles. Testing at lower speeds (25 mph and 45 mph) showed that DC output voltages varied linearly with speed. Based on repeated testing, speed calibration appears reproducible to a precision of about 0.5 mph or better, which corresponds to an error in precision of less than one percent at a nominal speed of 60 mph.

As an independent check on the accuracy of speed calibrations, a scan tool (Snap-on, Model MT2500-2989) was attached to the Assembly-Line Data Link (ALDL) connector in the passenger compartment of the Lumina, and the real-time speed output displayed on the scan tool was compared with that derived from the frequency to voltage conversion system described above. The results were found to agree within 1 mph (speed is displayed on the scan tool within only 1 mph).

Regarding calibration, it was noted that in testing the speed measurement system for the instrumented vehicle, a small amount of voltage drift was normally observed to occur at idle, resulting in indicated speeds that varied typically within plus or minus 0.1 mph when the vehicle was stopped. This level of imprecision in speed measurement due to voltage drift appears to be less than the uncertainty associated with speed calibration. As such, it is not deemed to be a significant problem. If this "zero drift" should change over time and require correction, that may be accomplished easily by resetting the speed offset in Block 3 of Control's setup menu.

Finally, two observations have been made regarding the OEM speedometer whose indicator dial is on the dashboard. First, when compared to the output from the scan tool output and that from the frequency-to-voltage conversion system, the reading from the vehicle's speedometer is seen to read about 5% high (3-4 mph at 60 mph). Second, it has been observed that at very high test speeds, above about 70-75 mph, the vehicle's speedometer behaves erratically, showing a sharp drop in speed and then resuming normal speed indication after the vehicle is slowed. This erratic behavior appears to be a problem only with the speedometer display as it does not appear to affect the automatic speed control system, which operates normally. Nor does it appear to affect the frequency-to-voltage speed measurement system, which continues to display and record normal speeds up to at least 90 mph, the highest speeds tested.

4.3 MAP Signal

The OEM sensor in the Lumina produces a DC voltage between 0 and 5 volts which is indicative of the absolute pressure in the intake of the manifold of the engine, or MAP. This is done using a sensor that varies in resistance as an electrical analog of the signal of interest, along with a 5 volt reference source and internal resistance. A generalized circuit diagram of the sensor setup is shown in Figure 4.1, where the sensor shown may be for MAP, throttle position, coolant temperature, or a number of other physical parameters. The signal thus generated is sent to the electronic control module (ECM) for processing. In the case of those sensors mentioned and others, the signal is also sent to the A/D board and is sampled and digitized at 1 hertz.

Based on comparison with a similar sensor in another late-model GM product and a table of MAP sensor voltages vs. pressures[14], it has been concluded that manifold pressure is directly proportional to the voltage output of the MAP sensor, except at voltage readings below about 0.5 volts. Using the tabulated values of MAP and voltage, the following linear equation has been derived for MAP, expressed in kiloPascals, as a function of MAP sensor output voltage (r^2=0.998):

$$\text{MAP(kPa)} = 7.5787 + 18.969 \times (\text{MAP sensor volts})$$

The corresponding scale factor and offset are used to configure Control, as described earlier.

4.4 Throttle Position Signal

The three-wire OEM throttle position sensor, like the MAP sensor, produces an output signal of approximately 0-5 volts DC which is indicative of throttle position. Throttle position is sampled at 1 hertz in Block 6 of Control and is displayed and recorded as throttle position sensor voltage. (In another setup file, "LUMGAS", which is outlined briefly in Section 7, throttle position sensor voltage is sampled and recorded at 4 hertz in a separate, time-stamped file.)

Figure 4-1

General Circuits for Most Analog Sensors Used in 1991 Chevrolet Lumina

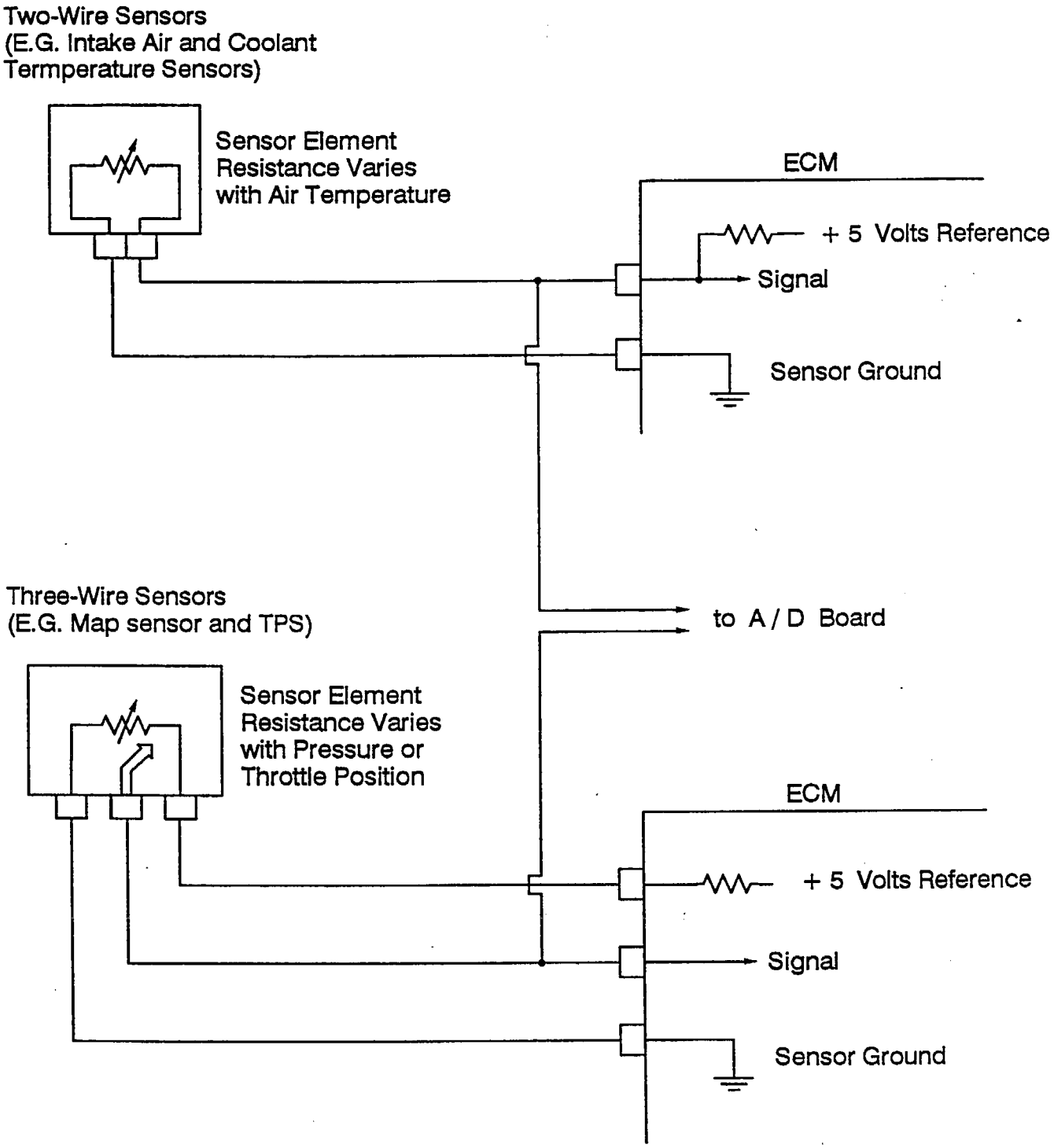

It would be tempting to assign to throttle position a scale factor of 20%/volt, which is consistent with 0% throttle at 0.0 volts and 100% throttle at 5.0 volts. However, this arbitrary assignment would be incorrect, since the voltage output range of the sensor is only approximate, not accounting for the internal resistance or other resistances which may be present. This has been confirmed by using the scan tool and observing the relationship between throttle position, expressed as a percent, and throttle position sensor voltage. With no pressure on the accelerator pedal, the voltage normally reads a nonzero value, typically between about 0.7–0.8 volts (the same voltage can be obtained from the scan tool or the data acquisition system described herein). At the same time, the throttle position is shown by the scan tool to be 0%. Depressing the accelerator fully (this can be done with key in, engine off), the throttle position sensor voltage increases to about 4.0–4.5 volts and the scan tool readout goes to 100%, as expected.

4.5 Oxygen Sensor Circuitry

The OEM oxygen (O_2) sensor and the voltage signal that it generates are more complex than most of the other OEM sensors. Accordingly, care must be taken in sampling and interpreting the signals from this sensor. This section presents a more extended discussion of the O_2 sensor and of test data collected and analyzed under various protocols. The discussion is intended to serve as guidance in interpreting O_2 sensor measurements that are collected in routine operation and in possible future exercises designed to collect specialized test data.

The zirconia oxide O_2 sensor is used to measure the residual oxygen concentration in the exhaust gases after a tiny portion of the exhaust has passed through the catalyzed wall of the sensor. The residual oxygen concentration serves as an indicator of actual air-to-fuel (A/F) ratio. The O_2 sensor is intended to provide level control signals, switching between two extreme voltage output levels, in the range of about 0 to 1 volt, depending upon whether the engine's A/F ratio is too rich or too lean compared to stoichiometric. Near-stoichiometric operation is required for the proper functioning of a three-way catalyst (TWC) system. The sensor produces no output voltage when it is below about 600°F[9] (i.e., immediately after startup of a cold engine).

The voltage-A/F relationship of a zirconia oxide O_2 sensor is illustrated in Figure 4-2. An important feature of the sensor's characteristic curve is the steepness of the voltage response in the stoichiometric region, which reflects the sensor's rapid response to changes in the A/F ratio of the exhaust gases. In effect, the sensor operates as an electrochemically driven switch which, at most times, is at or near the high- or low-voltage extremes, indicating rich operation (absence of residual O_2) or lean operation (presence of residual O_2), respectively.

In "closed loop" engine operation, particularly at high RPM, the sensor output may switch back and forth many times per second[15], providing the limit-level feedback signals that help to fine tune or "trim" fuel metering. In "open loop" mode, such as during warmup, hard

Figure 4-2

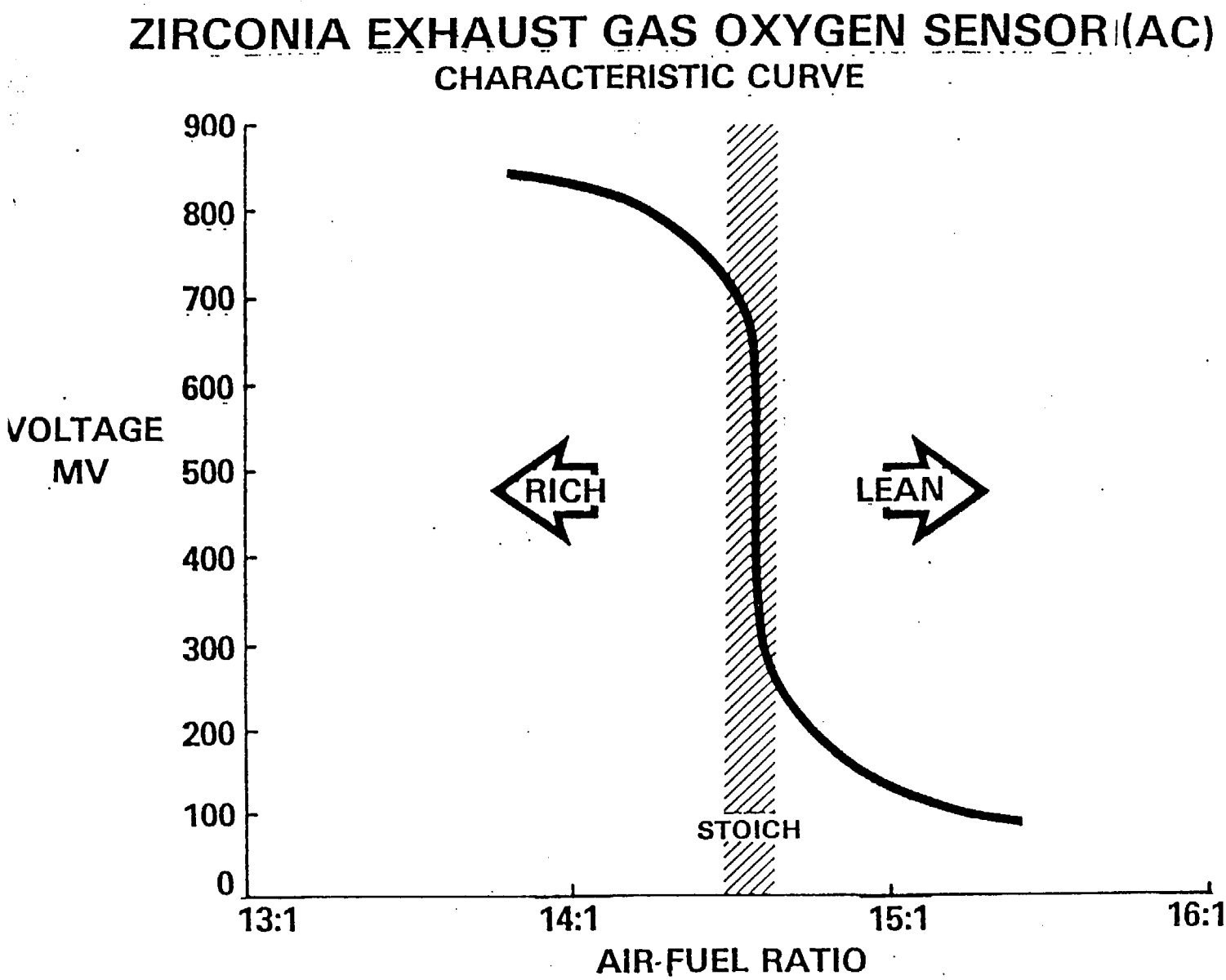

Source: "Combustion Engine Economy, Performance and Emissions", D.J. Patterson et al., University of Michigan short course, July 1990.

acceleration, or constant speed up a steep grade, the engine may require a richer than stoichiometric mixture for several seconds or more, rendering the oxidizing function of the TWC ineffective. During these times, the O_2 sensor sends out a signal that can remain at the rich limit value for several seconds or more. Depending upon how the O_2 voltage is sampled, it may be possible, therefore, to use the data from the O_2 sensor not only to determine whether the A/F ratio is rich or lean, but also to infer whether the engine is operating in a closed or open loop mode. As will be shown, sampling rate is an extremely critical design consideration in this determination.

The basic time step for sampling and storing data with the data acquisition system is one second. Because O_2 sensor voltage typically may vary between a high (about 0.85 volt) and low (about 0.1 volt) level many times per second, a random sample once per second would, by itself, provide little useful information about the average state of the O_2 sensor voltage for any second. Accordingly, a modified sampling strategy and interpretation is applied for O_2 sensor voltages.

Nyquist's sampling theory[16] states that one must, as a minimum, sample at least twice as fast as the highest frequency component in the input signal. In this case, the maximum frequency of the input signal, i.e., the maximum rate at which the O_2 sensor voltage switches between the rich and lean limits, is not known precisely. Accordingly, an experiment was conducted, sampling O_2 sensor voltage, MAP voltage, and speed, at 50 hertz, which is believed, based on physical considerations, to be at least twice as high as the highest probable O_2 sensor switching rates. Data were collected over about 30 seconds, during which time the vehicle was driven through a test regime of light, moderate and hard acceleration (wide open throttle) and deceleration, respectively. The results of this experiment are shown in Figure 4-3. Clearly visible in the figure is the switching of the O_2 sensor voltage between rich and lean voltage limits during closed loop operation. During a few brief periods, the sensor voltage is observed to remain at or near the rich limit, indicating an open loop condition of the engine. The latter condition is seen to occur in this data set at about seconds 10-12, 18-19, 22-26, and 27-35.

The same experimental O_2 sensor voltages are shown in Figure 4-4; in addition, this figure shows the one-second block averages of each set of 50 voltage measurements. Most of the one-second averages of O_2 sensor voltage lie in the range from 0.2 to 0.8 volt. During the periods of apparent open-loop engine operation (i.e., from seconds 10-12, 18-19, 22-26, and 27-35) and only during these periods, the one-second average of O_2 sensor voltage measurements is seen to be at or above an apparent threshold of about 0.8 volt. This threshold is, therefore, interpreted as an indicator level for open-loop operation.

Unfortunately, the data acquisition system is not capable of sampling O_2 sensor voltages at the rate of 50 hertz without sacrificing the measurement of other essential variables. Therefore, as a compromise, a lower sampling frequency, 10 hertz, has been selected to sample O_2 sensor voltages and, as with accelerometer voltage measurements that are also sampled at 10 hertz, each ten consecutive measurements are averaged

Figure 4-3

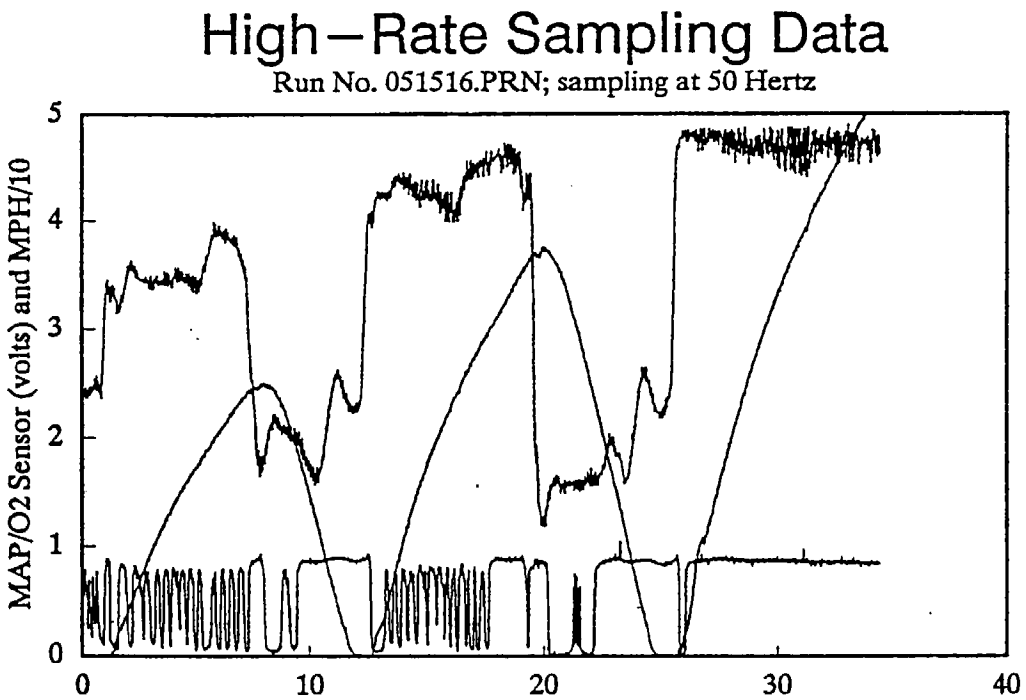

Upper curve is MAP. Middle (sawtooth) is speed. Lower curve is O2 sensor.
Three accelerations: light, moderate, wide open throttle.

Figure 4-4

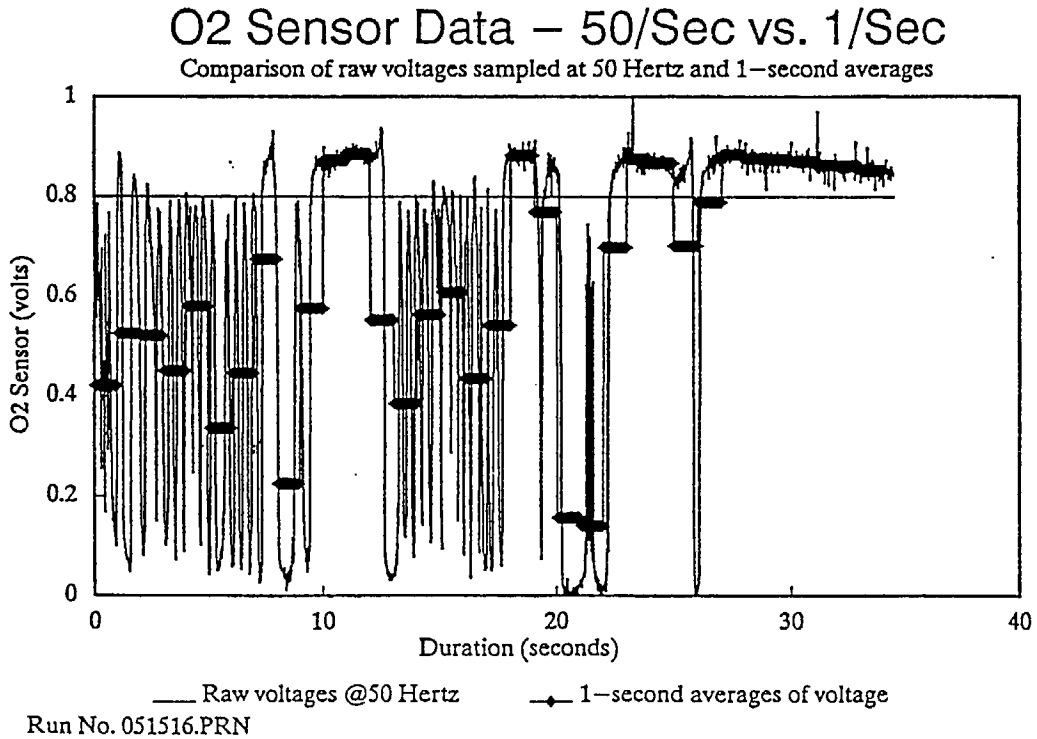

Run No. 051516.PRN
Light, moderate and hard (wide open throttle) accelerations for 1991 Chevrolet Lumina.

to provide a one-second value. The values for O_2 sensor voltage are intended to provide an indication of the state of O_2 concentrations in the exhaust and the mode of the engine operation for each second.

Further insight into the interpretation of O_2 sensor voltages sampled at 10 hertz may be gained by referring to Figure 4-4. If only one sample out of ten were in the lean region, i.e., 0.2 volt or less, and all others were at or near the rich limit of about 0.85 volt, the expected average voltage for the ten samples would be about $[(9 \times 0.85)+(1 \times 0.2)]/10 = 0.79$ volt. Thus, as illustrated by experiment for the one-second averages constructed from samples at the sampling rate of 50 hertz, when the one-second average of ten per-second samples exceeds about 0.8 volt, it is clear that all ten samples taken over the course of one second must have been at or near the high level.

This result alone does not ensure that the O_2 sensor voltage was in the high region for the entire one second. Consider, for example, the extreme case where the O_2 sensor voltage could be switching between rich and lean at a rate of exactly 10 hertz (or some integer multiple of 10 hertz) and, by chance, the 10 voltage samples could be taken either all at the high level or all at the low level. The vehicle operation could then be interpreted incorrectly to be open loop. The possibility of such an extreme case of error in inference, while deemed to be relatively unlikely, should serve as a reminder that O_2 sensor voltages must be interpreted with caution, and that they should, as a quality check, be examined in consideration of other simultaneously measured sensor signals.

4.6 RPM Frequency Counter

The frequency count of distributor pulses, which is updated second by second, provides a measure of the engine speed. For the Lumina's six-cylinder, four-cycle engine, firing of all six cylinders requires two revolutions of the crankshaft. The following equations show how this relationship translates into the corresponding engine speed:

$$\text{Distributor Pulse Reference Count in pulses per second} \times \frac{2 \text{ engine revolutions}}{6 \text{ pulses}} \times \frac{60 \text{ seconds}}{1 \text{ minute}} = \text{engine RPM}$$

That is:

$$\text{Engine RPM} = (\text{Distributor Pulse Reference Counts/sec}) \times 20$$

Engine RPM, unlike the previously described parameters, is based on a count of what occurred over the previous second. Accordingly, as shown later in the sample data, the first value listed for RPM in the data set, i.e., at time zero, will always be zero RPM.

RPM measurements have been corroborated by independent measurements using both the previously described SCAN tool and a Fluke automotive voltmeter (John FLuke Co., Model 88, Automotive Meter). However, examination of RPM data from a large number of drives has shown occasional "spikes" in the RPM measurements that are not more than one second in duration and indicate RPM in excess of 10,000, which is clearly an unrealistic value. Accordingly, if RPM is to be used in subsequent analyses, raw measurements should be screened for values in excess of 10,000. The FORTRAN program to calculate exhaust flows that is discussed in Section 7 provides this screening and also performs a linear interpolation of RPM measurements from adjacent seconds.

4.7 Manifold Air Temperature (MAT) Sensor

The MAT sensor is a critical part of the engine's air/fuel control system because it provides, along with the MAP sensor, the information needed by the ECM to compute the mass flow rate of intake air. It is also a useful parameter to sample and record if one wishes to compute mass air flow so that the mass flow rate of exhaust may be computed (provided that the several other necessary parameters can also be measured or estimated).

The MAT sensor relies on a semiconductor thermistor, located in the air intake manifold, which varies nonlinearly in resistance as manifold air temperature varies. The relationship between manifold air temperature and sensor resistance has been published as a diagnostic aid in the Lumina service manual. These data have been fitted to the intrinsically linear three-parameter thermistor equation using the method of least squares. The resulting equation, presented below, shows manifold temperature, expressed in degrees Rankine (°R), as a function of MAT sensor resistance:

$$T(°R) = \frac{1}{a + b \times (\log_e R) + c \times (\log_e R)^3}$$

where:

T = absolute temperature in degrees Rankine
$\log_e R$ = the natural logarithm of the MAT sensor resistance in ohms

and the following are fitted coefficients from the regression equation ($r^2 > 0.999$):

$a = 0.000837$
$b = 0.000123$
$c = 8.186 \times 10^{-8}$

The resulting semi-empirical equation shows the relationship between sensor resistance and MAT, but it does not provide the relationship between signal voltage and MAT, because the value of the internal

resistance in the ECM is not known. The internal resistance value and the voltage-temperature relationship that it controls may, however, be inferred from temperature and voltage readings from the scan tool.

Accordingly, a simple data collection experiment was performed in which the values of MAT sensor voltage and MAT were read from the scan tool while the engine was warmed up after a cold start. These data are shown in Figure 4-5. Analogous to the third-order polynomial in the logarithm of resistance of the thermistor equation, a third-order polynomial in the logarithm of voltage was computed for this intrinsically linear function. The resulting equation, shown below, is used to compute MAT based on measured voltages from the MAT sensor:

$$T(°K) = \frac{1}{a + b \times (\log_e V) + c \times (\log_e V)^3}$$

where:

T = absolute temperature in degrees Kelvin
$\log_e V$ = the natural logarithm of the MAT sensor voltage in volts

and the following are fitted coefficients from the regression equation ($r^2 = 0.75$):

$a = 0.003719$
$b = -0.00295$
$c = 0.00493$

While the correlation for this regression is not high ($r = 0.87$), MAT does not vary over a wide range, and a precise measure is not necessary for reasonable estimates of exhaust flow.

4.8 Coolant Temperature Sensor

The coolant temperature sensor uses a thermistor to provide a variable resistance as coolant temperature varies. A resistance/temperature calibration curve is provided in the Lumina service manual.

The coolant temperature is not required for any exhaust gas mass flow calculations or for other calculations. However, it does provide a useful indicator of the status of engine warmup. As the engine warms, sensor resistance drops and the measured voltage drops. At normal operating temperature, the voltage will measure about 1.5-2.0 volts[9].

Figure 4-5

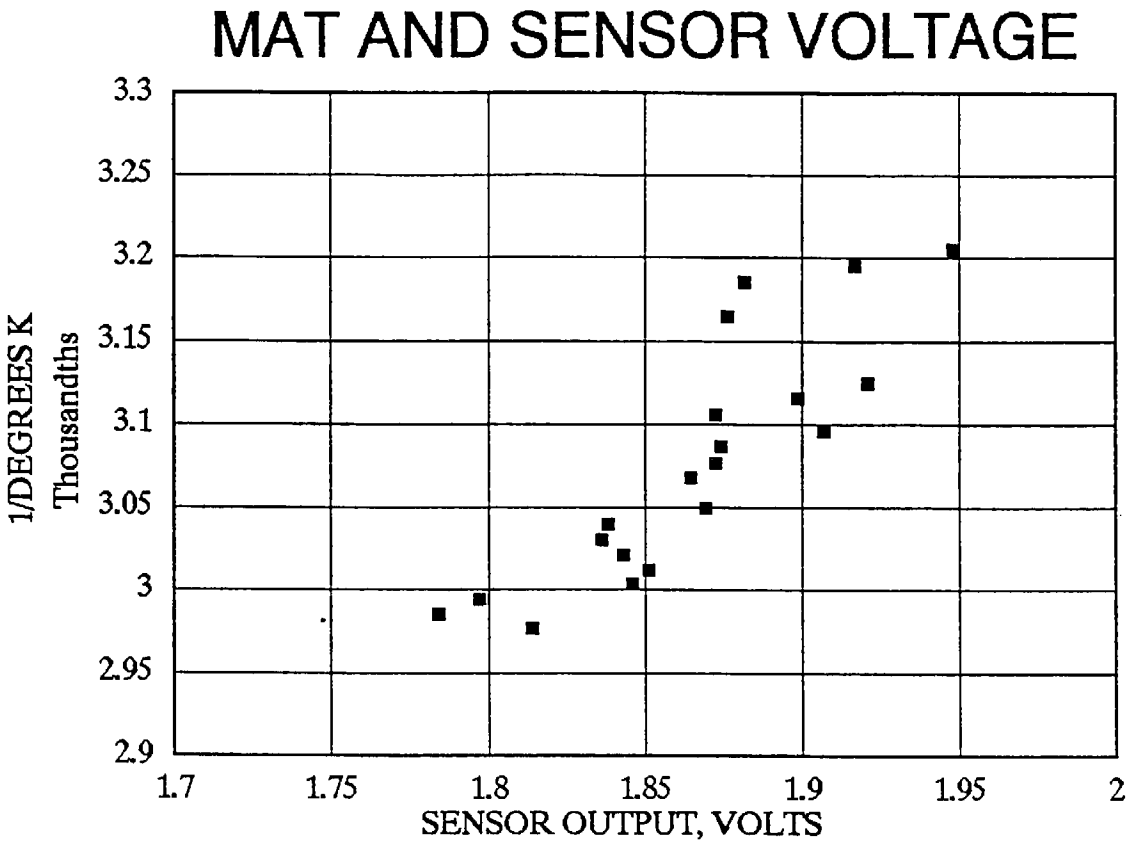
MAT AND SENSOR VOLTAGE
1/DEGREES K
Thousandths
3.3
3.25
3.2
3.15
3.1
3.05
3
2.95
2.9
1.7
1.75
1.8
1.85
1.9
1.95
2
SENSOR OUTPUT, VOLTS

5. CONNECTIONS TO OTHER OEM EQUIPMENT

5.1 Service Engine Soon (SES) Light

A relatively simple custom circuit and configuration of Labtech Control provides for placing the Lumina's electronic control module (ECM) in diagnostic mode and reading the state of the check engine light in order to read fault codes. The circuitry which allows this is shown in Figure 5-1. The key component is a TTL-compatible reed relay which provides a contact closure for the ALDL while isolating it from the electronics on the A/D board.

A small control box, which is normally located in the glove compartment, is equipped with several pairs of terminals on each of three sides and a toggle switch. When it is desired to read fault codes, the terminal pair on the left-hand side of the figure is connected via the twisted pair wire to connections "A" and "B" of the ALDL and Labtech Control is started, using the setups "LUMSES." This setup should be used first by turning the ignition "on" with engine "off."

The terminal pair from the control box which is labelled "coil" connects via a twisted pair to one of the digital outputs (OPT1) from the DAS-8 A/D board which is mounted in the PC in the trunk. When LUMSES is run, this output is driven low for about 45 seconds, which energizes the 5 volt coil of the TTL-compatible relay, initiating the close of contacts. Upon closure of the ALDL's contacts A and B with ignition on and engine off, the Lumina's ECM enters diagnostic mode and begins to display the status of any fault codes by flashes of the SES light. The protocol for these flashes is described fully in the Lumina service manual.

The bitstream created by the SES light is available for sampling at the multiconductor cable connector in the trunk area. This bitstream should be sampled at a rate of at least 4 Hertz to ensure accurate capture of patterns of the flashing SES indicator light. A sample data set was collected to show how the LUMSES could be used to read fault codes from the ECM. Appendix D provides a sample printout of a data file collected in this manner. For this run, data were collected at 4 Hertz; each line of data on the printout represents one record. The last column of data is a series of 1's and 0's, representing the state of the SES light as off or on, respectively. For this sample run, the oxygen sensor had been previously disconnected and the engine was warmed up and run for sufficient time for the ECM to set a soft fault code 12, for oxygen sensor disconnected. Code 13 indicates that the ECM is operating correctly. In this case, the series of 1's and 0's reflects the flashes of the SES light, with each flash of light represented by either one or two (consecutive) 0's. The data stream was sampled for 45 seconds.

Figure 5-1

Circuitry for SES Light and O_2 Sensor Disconnection*

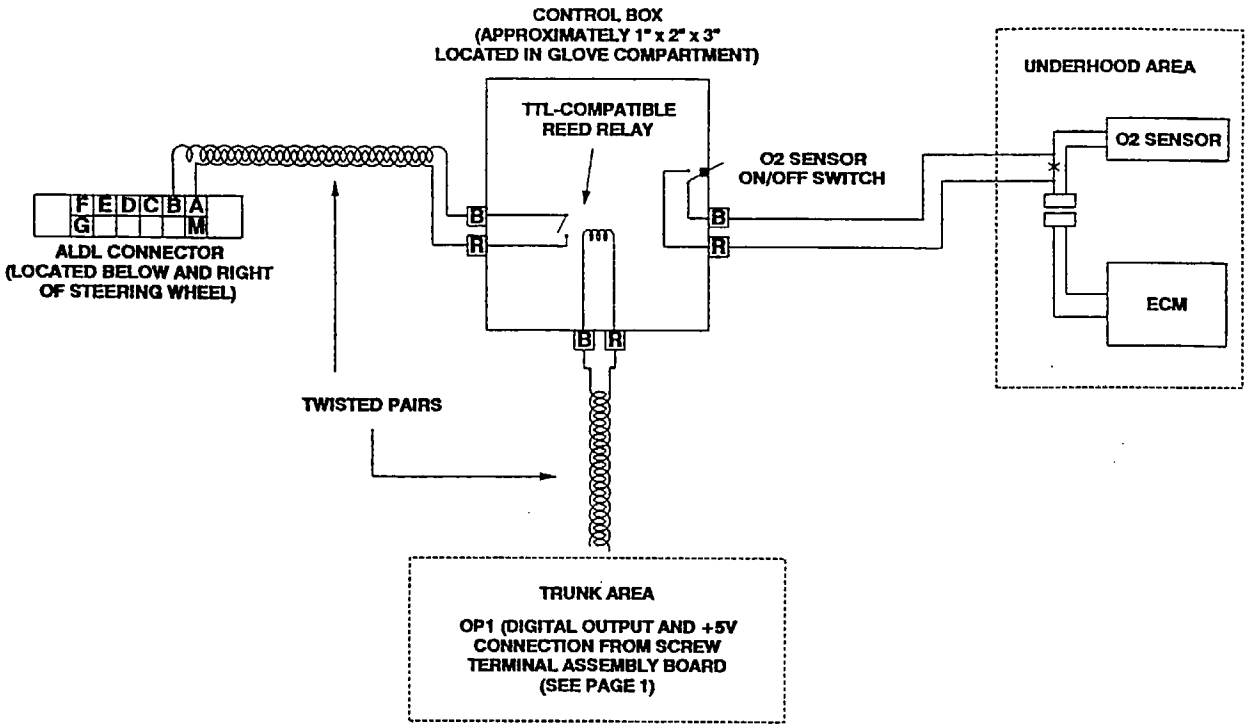

* Circuit used to collect data on fault codes stored in the Lumina's ECM (used with Control setup LUMGAS with ignition on and engine off)

A marker beside the data stream indicates each flash of the SES light, and beside that is a decimal digital representing a count of the flashes between each long pause, here indicating either 13 or 12. Each two-decimal digit code is sent three times. The digital data stream is thus interpreted as "13 12 12 12 13 13 ...", i.e., ECM operating correctly, O_2 sensor circuit open.

Sierra has investigated approaches for transmitting data on fault codes via radio transponder to stationary transceivers. Additional hardware and software would be required[17] to implement those functions.

5.2 Recording of Gear Changes

For gears 2,3 and 4, there exists a digital (0 or 12 volt) signal at the wiring harness of the ECM. These signals are available for sampling at the multiconductor cable in the trunk area, but must be attenuated to about 5 volts before inputting to a digital input channel of the A/D board. This can be done using a voltage divider, as depicted in

Figure 5-2. Voltage dividers are provided in the Lumina (small grey box attached to the blue screw terminal accessory box in the trunk area).

Figure 5-2

Voltage Divider

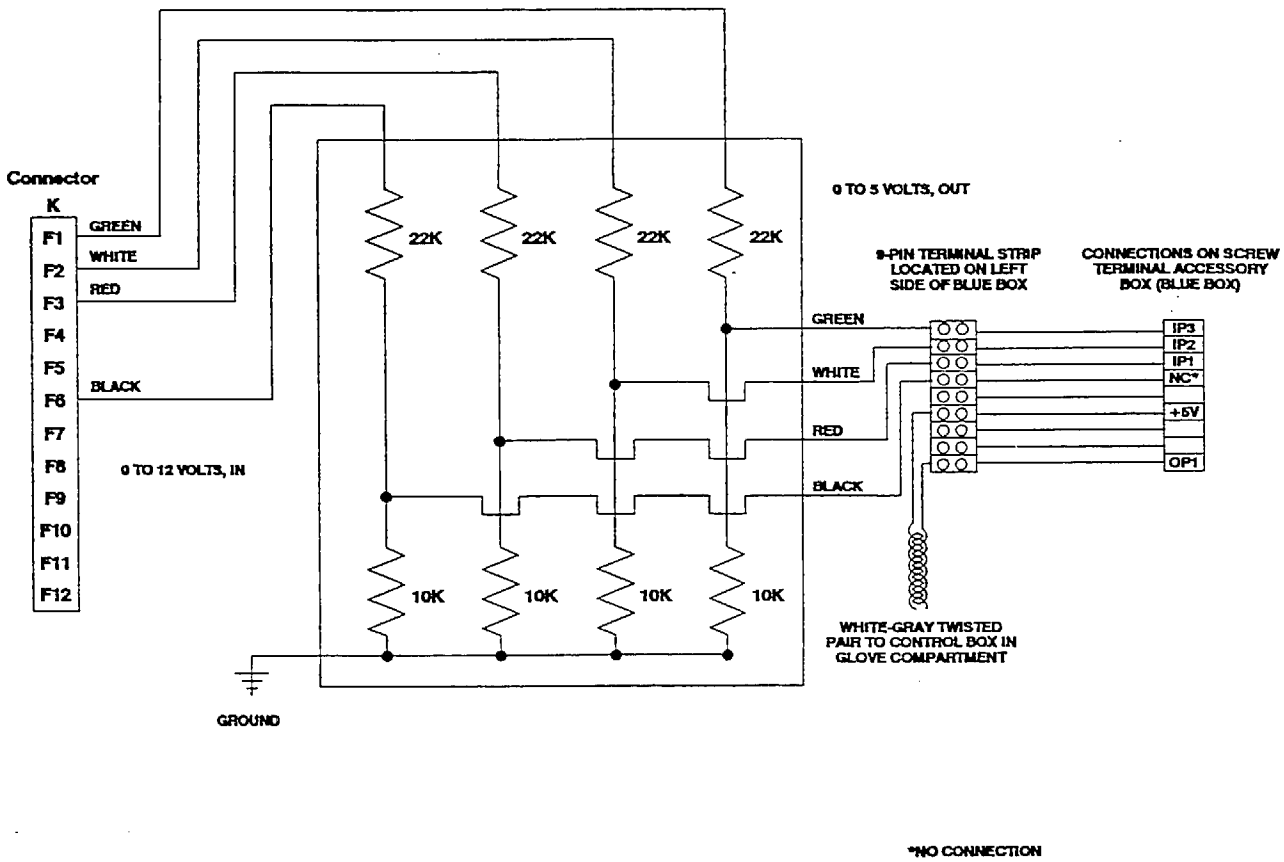

Using Control's calculated channels, the three gear signals can be combined to yield a sum that is equal to the current gear.

5.3 Recording of Throttle Position Sensor Voltages at Higher Sampling Rates

In order to examine the time resolution and potential significance of throttle variations during quasi-steady-state driving, a dataset was collected using the Lumina. The dataset includes speed, manifold air pressure and throttle position sensor voltage, all sampled at four Hertz, along with other variables sampled at that rate or faster. Selected portions of the dataset, all collected at or just below freeway speeds of 55-65 mph were examined and variations in throttle position documented.

The data were collected during a normal commute drive in the evening rush hour on June 9, 1993, while driving the Lumina from downtown Sacramento across the Yolo Causeway westbound along Interstate Highway 80, and terminating about 20 miles later in Davis. The Yolo Causeway was selected as a test drive location for examination of throttle position variations because it is a relatively level and smooth freeway having no points of access or egress for traffic and because it tends, even at rush hour, to have relatively smoothly flowing traffic on most days. This permitted the test vehicle to operate at or near normal freeway speeds. During the first and last parts of the drive on the Causeway, the Lumina was operated under cruise control and during the latter part of the drive, under manual throttle control. Both sections of driving were characterized by typical heavy but smoothly flowing traffic at speeds of about 55–65 mph.

As shown in Table 5–1, the run commenced at 18:04 hours and the basic time step for data collection was set at 4 samples per second (4 Hertz) in order to capture any relatively fine variations in throttle position that might occur on a short time scale. In this table, and the figures that follow, the current duration of time into the run is shown in seconds. The data are divided into two parts representing selected portions of the run while operating under cruise control (seconds 450–470) and manual throttle control (seconds 1220–1240). Manifold absolute pressure (MAP), expressed in kiloPascals (100 kPa = 1 atmosphere), is shown next, followed by throttle position sensor voltage (TPSV) and TPSV X 45 (the latter multiplication represents a scaling factor used for graphing purposes.)

MAP is a useful parameter to examine for several reasons. It is, in a sense, the opposite of engine vacuum. When the throttle is wide open, vacuum is very low and MAP is very high, approaching 100 kPa, or 1 atmosphere. When vacuum is high, e.g., at idle, MAP is very low. In the Lumina, measurements of MAP are used in the vehicle's ECM, along with measurements of manifold air temperature and engine speed, to compute the mass flow rate of intake air to the engine[9]. In addition, because it is a sensitive indicator of engine load, MAP is used in the Lumina and many other vehicles as a feedback control to the electronic cruise control system.

Operation of the Lumina under cruise control can be seen in Figures 5–3 and 5–4. In Figure 5–3, the smooth upper curve shows that vehicle speed over this 120–second portion of the drive varied only slightly, in the range of 58–59 mph. The middle curve in the figure represents MAP, and the bottom curve represents TPS voltage, which has been multiplied by 45 to allow convenient graphical comparisons.

Referring to Figure 5–4, which has an expanded scale for both ordinate and abscissa, note that speed drifts slowly upward from second 440 and peaks at about second 457. At this point, the cruise control reacts to slow the vehicle by sharply reducing MAP, from about 53–55 kPa to about 49 kPa, and throttle setting (TPSV X 45) is reduced from about 48–49 to 46 (i.e., TPS voltage lowers from about 1.07 volts to 1.02 volts). This step change in engine power results, after about 5–7 seconds, in a slight slowing of the vehicle, after which MAP and throttle are again increased (at about second 465).

SIERRA RESEARCH
LUMSES4: 4 SAMPLES/SEC
The time is 18:04:49.07.
The date is 8-09-1993.

Table 5-1
High Sampling Rate Data from Throttle Position Sensor

CRUISE CONTROL PORTION

DURATION SECONDS	MAP KPA	SPEED MPH	THROTTLE VOLTS	THROTTLE VOLTS*45
450.24	52.42	58.84	1.074	48.33
450.49	52.71	58.94	1.074	48.33
450.74	52.71	59.08	1.079	48.555
450.99	52.42	59.08	1.072	48.24
451.24	52.42	59.08	1.072	48.24
451.49	52.22	59.18	1.086	48.87
451.74	52.22	59.18	1.082	48.69
451.99	52.46	59.22	1.074	48.33
452.24	52.27	59.22	1.074	48.33
452.49	52.66	59.13	1.072	48.24
452.74	52.42	59.27	1.082	48.69
452.99	52.66	59.32	1.077	48.465
453.24	52.56	59.32	1.077	48.465
453.49	52.8	59.13	1.074	48.33
453.74	52.8	59.13	1.077	48.465
453.99	53.78	59.27	1.094	49.23
454.24	53.05	59.22	1.084	48.78
454.49	53.58	59.18	1.074	48.33
454.74	53.19	59.22	1.079	48.555
454.99	53.53	59.03	1.077	48.465
455.24	53.34	59.22	1.074	48.33
455.49	53.29	59.37	1.086	48.87
455.74	53.78	59.27	1.074	48.33
455.99	54.8	59.03	1.072	48.24
456.24	54.12	59.22	1.096	49.32
456.49	53.58	59.32	1.072	48.24
456.74	53.39	59.13	1.084	48.78
456.99	52.66	59.22	1.069	48.105
457.24	52.51	59.37	1.077	48.465
457.49	52.61	59.27	1.06	47.7
457.74	49.74	59.32	1.025	46.125
457.99	48.62	59.18	1.038	46.71
458.24	48.62	59.32	1.03	46.35
458.49	48.42	59.32	1.023	46.035
458.74	48.86	59.18	1.028	46.26
458.99	49.01	59.13	1.03	46.35
459.24	48.86	58.94	1.016	45.72
459.49	49.15	58.94	1.028	46.26
459.74	48.96	58.89	1.025	46.125
459.99	49.15	58.89	1.025	46.125
460.24	49.01	58.99	1.023	46.035
460.49	49.06	59.08	1.028	46.26
460.74	48.86	59.22	1.033	46.485
460.99	49.35	58.84	1.023	46.035
461.24	49.1	58.99	1.025	46.125
461.49	48.26	58.84	1.033	46.485
461.74	48.33	58.84	1.035	46.575
461.99	48.81	59.08	1.03	46.35
462.24	48.42	58.8	1.028	46.26
462.49	48.33	59.08	1.021	45.945
462.74	48.96	58.8	1.045	47.025
462.99	49.35	58.94	1.028	46.26
463.24	48.67	59.08	1.018	45.81
463.49	50.18	58.84	1.021	45.945
463.74	51.25	58.7	1.038	46.71
463.99	51.34	58.8	1.035	46.575
464.24	50.27	58.84	1.04	46.8
464.49	50.47	58.8	1.055	47.475
464.74	53.05	58.75	1.079	48.555
464.99	53.49	58.75	1.091	49.095
465.24	53.83	58.84	1.077	48.465
465.49	54.41	58.89	1.072	48.24
465.74	55.82	58.99	1.077	48.465
465.99	56.99	58.89	1.086	48.87
466.24	55.53	58.89	1.084	48.78
466.49	54.61	58.84	1.094	49.23
466.74	54.46	58.84	1.091	49.095
466.99	53.88	58.84	1.086	48.87
467.24	54.56	58.75	1.077	48.465
467.49	54.56	58.84	1.05	47.25
467.74	54.95	58.7	1.074	48.33
467.99	57.09	58.65	1.082	48.69
468.24	56.07	58.6	1.089	49.005
468.49	55.87	58.6	1.094	49.23
468.74	54.51	58.51	1.094	49.23
468.99	53.19	58.84	1.084	48.78
469.24	53.58	58.84	1.084	48.78
469.49	54.61	58.94	1.086	48.87
469.74	55.63	58.8	1.077	48.465
469.99	56.07	58.75	1.079	48.555
470.24	56.41	58.65	1.099	49.455
470.49	55.24	58.51	1.086	48.87
470.74	55.09	58.65	1.086	48.87
470.99	53.39	58.75	1.086	48.87

MANUAL THROTTLE CONTROL PORTION

DURATION SECONDS	MAP KPA	SPEED MPH	THROTTLE VOLTS	THROTTLE VOLTS*45
1220.22	73.64	59.65	1.262	56.79
1220.47	69.7	59.51	1.213	54.585
1220.72	67.9	59.75	1.194	53.73
1220.97	67.99	59.6	1.196	53.82
1221.22	67.75	59.51	1.172	52.74
1221.47	65.71	59.51	1.206	54.27
1221.72	66.24	59.6	1.182	53.19
1221.97	66.97	59.6	1.167	52.515
1222.22	66.48	59.89	1.199	53.955
1222.47	69.06	60.03	1.216	54.72
1222.72	69.65	59.75	1.216	54.72
1222.97	68.97	60.08	1.23	55.35
1223.22	70.82	59.99	1.23	55.35
1223.47	68.82	60.13	1.233	55.485
1223.72	70.18	60.08	1.255	56.475
1223.97	67.99	60.27	1.201	54.045
1224.22	64.54	60.22	1.123	50.535
1224.47	58.84	60.27	1.084	48.78
1224.72	58.55	60.41	1.099	49.455
1224.97	56.89	60.13	1.104	49.68
1225.22	56.99	60.41	1.104	49.68
1225.47	53.58	60.37	1.035	46.575
1225.72	47.4	60.32	0.969	43.605
1225.97	42.63	60.18	0.969	43.605
1226.22	40.73	60.03	0.962	43.29
1226.47	42.14	60.18	0.962	43.29
1226.72	43.65	59.89	1.025	46.125
1226.97	47.35	59.99	1.028	46.26
1227.22	47.55	59.84	1.016	45.72
1227.47	52.48	59.79	1.138	51.21
1227.72	59.81	59.75	1.123	50.535
1227.97	58.01	59.94	1.113	50.085
1228.22	57.48	59.84	1.135	51.075
1228.47	58.01	59.94	1.099	49.455
1228.72	52.37	60.03	1.03	46.35
1228.97	49.88	59.84	1.025	46.125
1229.22	51.66	59.65	1.052	47.34
1229.47	51.64	59.75	1.055	47.475
1229.72	51.15	59.46	1.069	48.105
1229.97	53.29	59.56	1.064	47.88
1230.22	55.48	59.56	1.084	48.78
1230.47	55.77	59.79	1.096	49.32
1230.72	55.73	59.41	1.096	49.32
1230.97	57.38	59.6	1.101	49.545
1231.22	57.48	59.79	1.116	50.22
1231.47	59.96	59.56	1.189	53.505
1231.72	64.98	59.51	1.191	53.595
1231.97	67.99	59.65	1.196	53.82
1232.22	66.87	59.89	1.199	53.955
1232.47	67.7	59.79	1.204	54.18
1232.72	68.68	60.08	1.213	54.585
1232.97	66.97	59.94	1.216	54.72
1233.22	68.24	59.99	1.204	54.18
1233.47	67.41	60.13	1.204	54.18
1233.72	68.14	60.37	1.206	54.27
1233.97	67.31	60.27	1.184	53.28
1234.22	64.83	60.13	1.13	50.85
1234.47	60.06	60.13	1.104	49.68
1234.72	50.47	60.22	0.969	43.605
1234.97	45.45	60.27	0.959	43.155
1235.22	40.34	59.99	0.967	43.515
1235.47	42.68	59.75	0.962	43.29
1235.72	41.46	59.94	0.967	43.515
1235.97	40.49	59.84	0.972	43.74
1236.22	42.48	59.84	0.981	44.145
1236.47	44.04	59.65	0.969	43.605
1236.72	43.51	59.65	0.989	44.505
1236.97	43.46	59.37	1.021	45.945
1237.22	50.13	59.41	1.086	48.87
1237.47	58.84	59.46	1.133	50.985
1237.72	59.23	59.41	1.118	50.31
1237.97	58.45	59.6	1.125	50.625
1238.22	57.77	59.46	1.145	51.525
1238.47	58.94	59.41	1.133	50.985
1238.72	59.33	59.41	1.133	50.985
1238.97	59.72	59.65	1.13	50.85
1239.22	57.77	59.51	1.099	49.455
1239.47	48.23	59.46	0.95	42.75
1239.72	45.7	59.65	0.947	42.615
1239.97	41.07	59.51	0.93	41.85
1240.22	40.68	59.51	0.942	42.39
1240.47	41.61	59.08	0.925	41.625
1240.72	41.12	59.03	0.928	41.76
1240.97	41.46	58.84	0.933	41.985

Figure 5-3

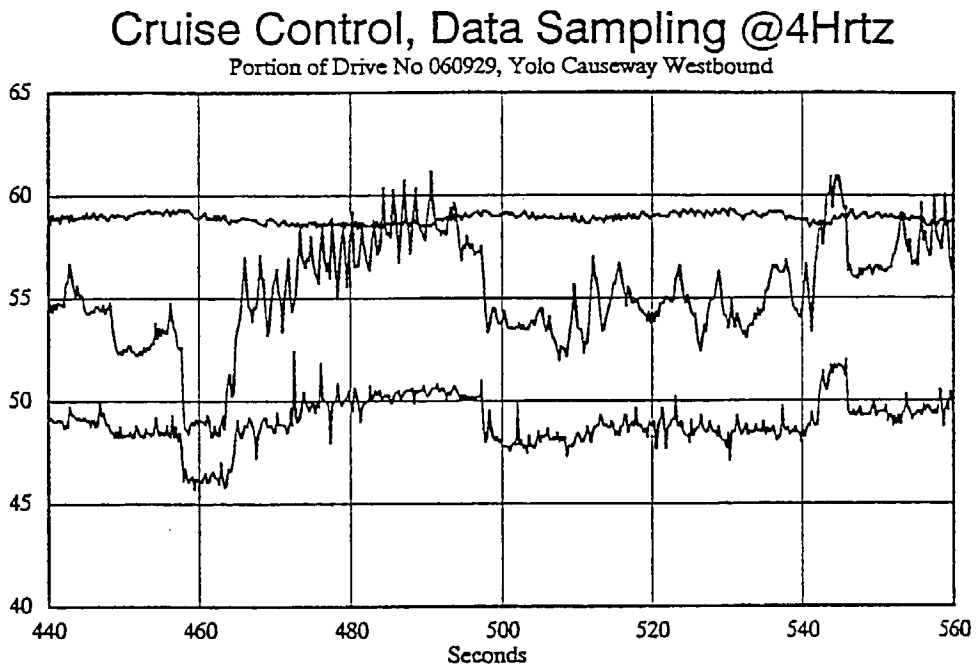

Upper curve is speed (mph). Middle curve is MAP (kPa).
Bottom curve is TPS (volts*45).

Figure 5-4

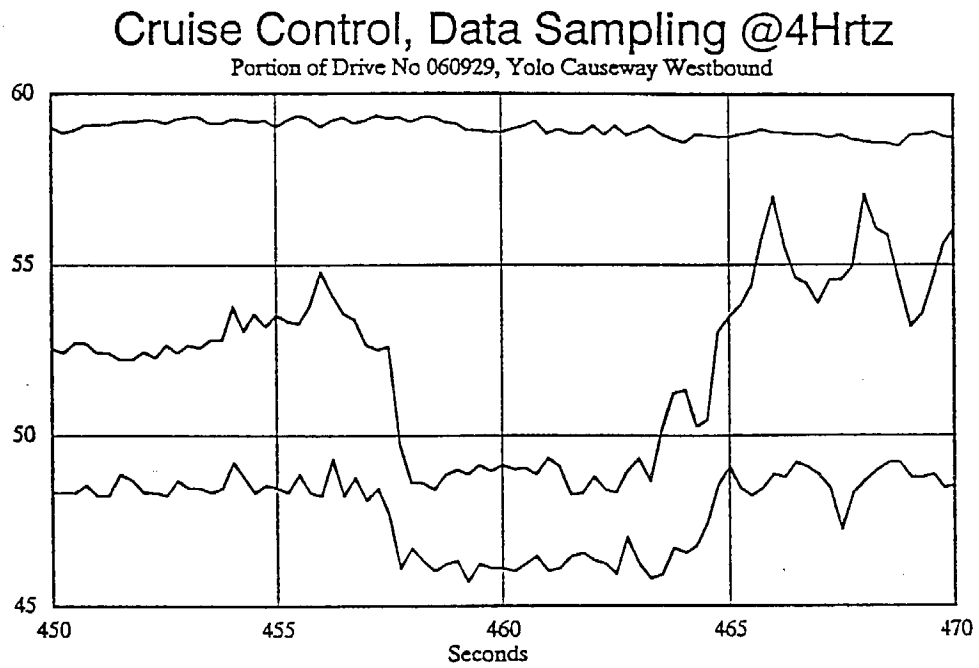

Upper curve is speed (mph). Middle curve is MAP (kPa).
Bottom curve is TPS (volts*45).

Figures 5-5 and 5-6 show the same parameters measured during a later part of the same drive except that cruise control is turned off and the throttle is under manual control. Comparing the data in Figures 5-5 and 5-6 with data collected during cruise control (Figures 5-3 and 5-4), the most striking difference is the much wider range in variation in all parameters under manual throttle control. Note the much wider scale on the ordinate for Figure 5-5 compared with Figure 5-3 and for Figure 5-6 compared with Figure 5-4. The latter comparison is particularly noteworthy because the 20-second time segment that was enlarged in Figure 5-4 for cruise control was specifically chosen to highlight a relatively large speed deviation in Figure 5-3, and the 20-second segment in Figure 5-6 (manual throttle control) was selected to highlight a region of minimum speed variation from Figure 5-5.

5.4 Disconnection of O_2 Sensor

A toggle switch has been provided in the glove compartment that allows for convenient connection and disconnection of the O_2 sensor. Turning off the O_2 sensor at highway speeds results in setting of a (soft) fault code and illumination of the SES light by the ECM within about 30 seconds. Upon shutdown and restart of the Lumina, the SES light will not be illuminated and the fault code will not be reset until the engine has warmed up and the ECM has detected that the O_2 sensor is still not providing a valid signal. After repeated key-on actions, the soft fault will become a hard fault code, requiring a manual reset. At any time before this, the O_2 sensor may be reconnected using the toggle switch and the fault code will be erased shortly thereafter.

As described in Section 7, vehicle emissions have been sampled with the O_2 sensor connected and with it disconnected, and the differences in CO emissions have been dramatic.

5.5 Feasibility of Installing a Laser Rangefinder

It appears to be feasible to install a laser rangefinder in the front grill of the Lumina in order to measure and record the speed of targets in the lane immediately ahead. However, two considerations mitigate the utility of such an installation. First, the length of all off-the-shelf commercial laser rangefinders and/or velocimeters of which Sierra is familiar cannot be accommodated by the area behind the Lumina's grill, where the maximum length dimension is only about four inches. By comparison, Laser Atlanta's off-the-shelf hand-held units and custom grill mount unit specially designed for Sierra require approximately eight inches, which can be accommodated in a 1991 Chevrolet Caprice or a late-model Lincoln Town Car.

A second consideration is the vehicle's suspension and its effect on measurements. Sierra's Chevrolet Caprice has a relatively smooth ride due to a somewhat soft suspension. The Lumina's suspension appears to be much stiffer and is expected to be more subject to vertical vibration. Contributing to this problem is the shorter wheelbase of the Lumina (106" compared to 117" for the Caprice). While the differences

Figure 5–5

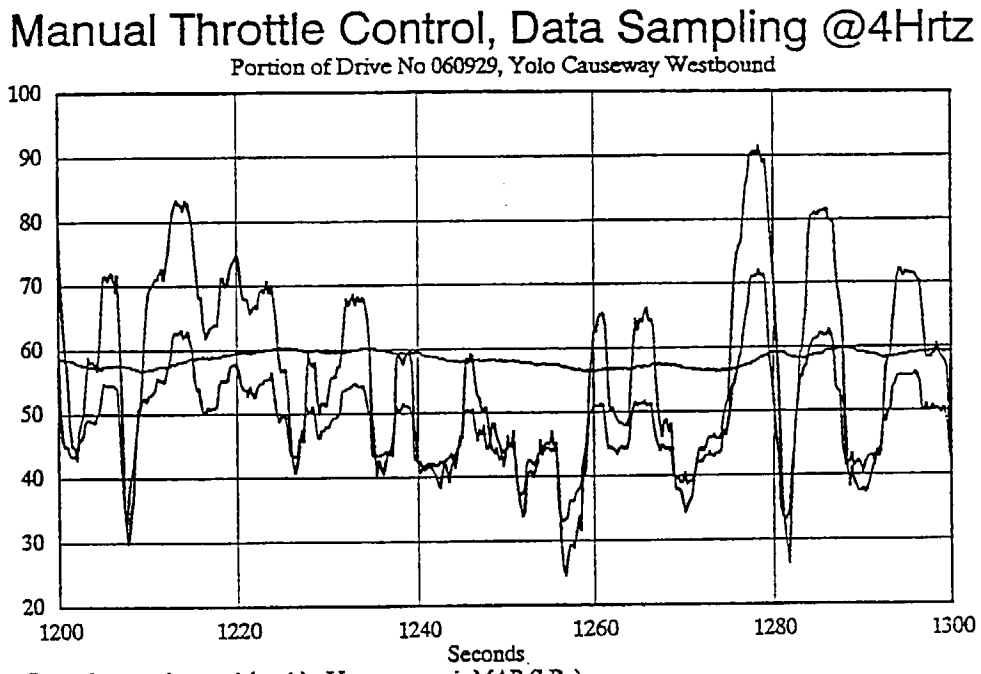

Smooth curve is speed (mph). Upper curve is MAP (kPa).
Bottom curve is TPS (volts*45).

Figure 5–6

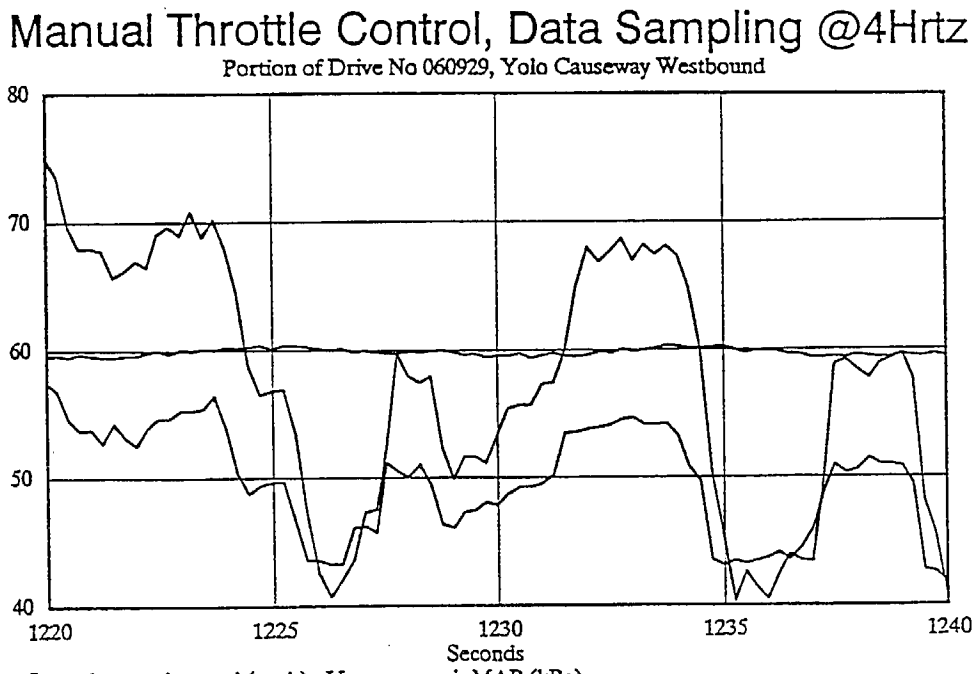

Smooth curve is speed (mph). Upper curve is MAP (kPa).
Bottom curve is TPS (volts*45).

may seem small, they become amplified at typical target distances of 150 feet or more, where road surface irregularities as small as an inch in height can cause changes in the height of the laser target spot of more than a foot. For random disturbances, such variations may be partially compensated by time-averaging. Without additional investigation, however, it is not known whether and to what extent this potential problem could be mitigated in the Lumina.

In terms of software and hardware, the data logger in the Lumina is fully compatible with a laser rangefinder of the type used by Sierra or any other laser rangefinder configured to communicate via an RS232C serial interface port.

As a final note, Sierra has discussed with Laser Atlanta the possibility of using a hand-held laser "gun" from within a moving vehicle[18]. Laser Atlanta recommends against this approach, saying that it is extremely difficult for an "observer" to keep the laser fixed on a moving target from within a moving vehicle. Furthermore, they have found that some windshields attenuate the laser signal, resulting in shortened maximum ranges.

6. ACCELEROMETERS AND THE DETERMINATION OF GRADE

6.1 Introduction

The supplemental sensors installed in the Lumina include two accelerometers[19] (see Appendix E for accelerometer specifications). Both accelerometers are mounted on the floor in the front passenger area. One accelerometer is positioned longitudinally and one laterally relative to the body of the vehicle. Under ideal conditions of smooth road, no curves and no mechanical vibration or electrical noise (these and other environmental variables are discussed below), the grade on which the vehicle is travelling can be determined from just the vehicle speed and the longitudinal acceleration using the following formula:

$$a_2 = a_1 + g \sin A \qquad \text{Eq(1)}$$

where a_1 = acceleration computed from vehicle speed (ft/sec^2),
a_2 = longitudinal accelerometer reading (ft/sec^2),
A = grade angle (radians), and
g = gravitational constant (32.15 ft/sec^2).

The values of a_1 can be computed from the speedometer data using the centered difference approximation,

$$a_1(t) = (v(t+dt)-v(t-dt))/(2\ dt) \qquad \text{Eq(2)}$$

where $v(t)$ = vehicle speed at time t, and
dt = sampling time.

If A is small (less than 0.2 radians), sin A can be replaced by A using the small angle approximation. Both a_1 and a_2 can also be expressed in g units rather than in ft/sec^2. These changes simplify Eq(1) so that the grade angle becomes,

$$A = a_2 - a_1 \qquad \text{Eq(3)}$$

where A = apparent grade angle (radians),
a_1 = acceleration (g's) computed from measured vehicle speeds, and
a_2 = measured longitudinal acceleration (g's).

The resulting value for grade is described as "apparent grade" because there are several sources of error and/or interference that render this estimation method impractical for direct application to the measured data. These include the following:

- electrical noise from the accelerometers, power system, and data collection system;
- movement of the vehicle due to road noise;
- change in vehicle pitch due to vehicle acceleration or braking;
- errors in the computation of a_1 using Eq(2); and
- differencing errors from Eq(3).

The effects of each of these errors are discussed below.

When the accelerometer and data collection system were operated without running the vehicle, high-frequency oscillations in the digitized accelerometer readings on the order of 0.01–0.02 g's were observed*. The readings from the longitudinal and lateral accelerometers were found to be uncorrelated and typically had r^2 values near zero. When the vehicle was stationary with the engine running, the magnitude of these oscillations increased. These oscillations are attributed to electrical noise. It could not be determined whether this noise was due to some component of the vehicle or data collection system, or was internal to the accelerometers.

This electrical noise made an alternative grade computation method[20] unusable. The alternative approach computes grade from two accelerometer readings, where one accelerometer is mounted on the longitudinal axis of the vehicle and the second is mounted vertically.

Acceleration in this system is described by the following two equations:

$$a_2 = a_1 - g \sin A \qquad \text{Eq(4A)}$$

$$a_2' = g \cos A \qquad \text{Eq(4B)}$$

where a_1 = vehicle longitudinal acceleration
a_2 = longitudinal accelerometer reading
a_2' = vertical accelerometer reading
A = grade angle.
(All units are the same as in Eq(1).)

---

* Most of the experiments described in this section were conducted with the accelerometers mounted in the rear trunk area. Subsequently, the accelerometers were moved to the front passenger area in order to expose them to accelerations more representative of the on-road accelerations characterized by the front wheel movements.

These equations can be reduced to a simple quadratic relation for a_1 in terms of a_2 and a_2' [20]. Once a_1 is determined, A can then be calculated from either Eq(4A) or Eq(4B). Vehicle tests using this method produced erroneous results, including imaginary or complex values for the longitudinal acceleration. The failure of this approach is attributed to the lack of correlation between the two accelerometers caused by the electrical noise. An alternative explanation may be differences in the response to vehicle pitch and road noise.

In addition to the electrical noise described above, the longitudinal accelerometer data typically contained noise resulting from small changes in vehicle movement and road roughness. The data collection and digitizing system have a sampling frequency of 10 Hertz, with the sampled data then being averaged over each second. The resulting data have few frequency components greater than 1 Hertz. Although this collection and averaging method is roughly equivalent to a low pass filter, it does not completely eliminate the noise. Noise still appears in lower frequency components due to a sampling phenomenon known as aliasing[16].

Noise was removed from the longitudinal acceleration data by using a digital low pass filter. A cutoff frequency of approximately 0.1 Hertz was found to give good agreement with acceleration computed from speedometer data for a series of test runs on flat terrain. The results of the test of grade measurements are shown in Figure 6-1.

Figure 6-1

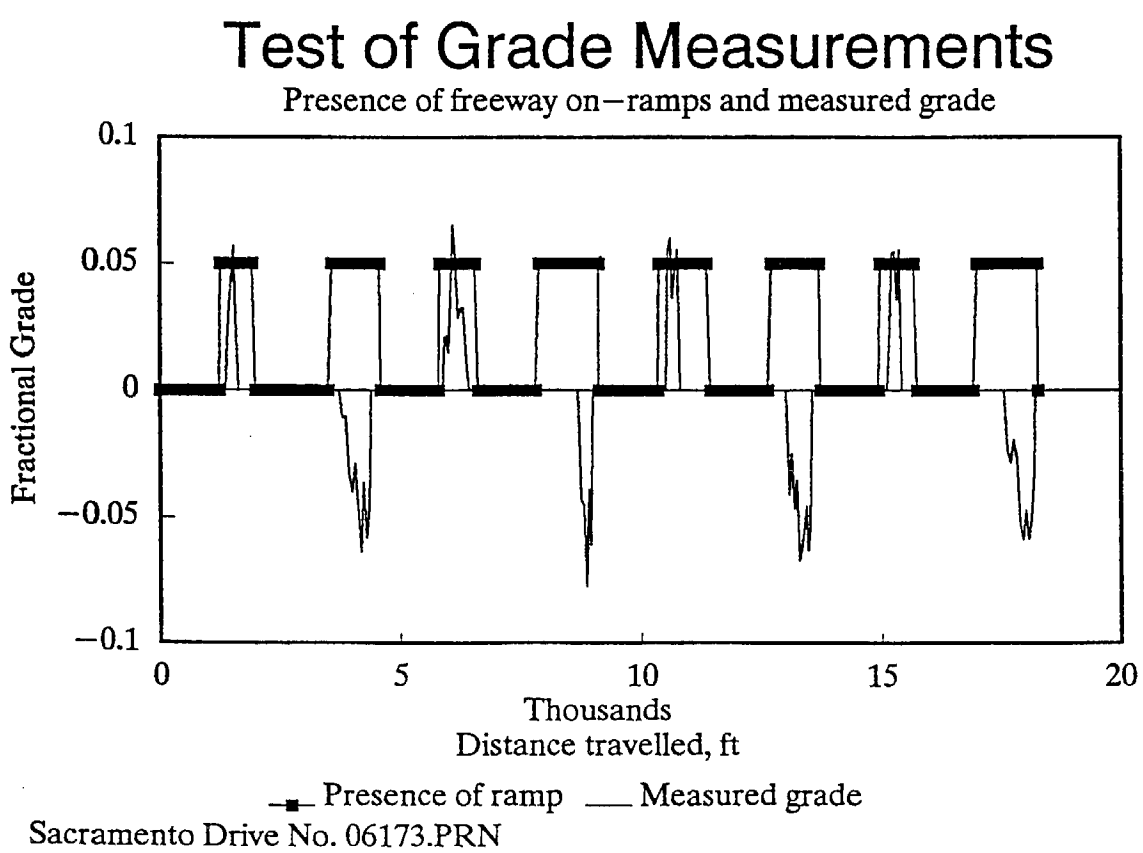

The effects of vehicle pitch on accelerometer data were investigated by running a series of accelerations and decelerations on flat terrain. The longitudinal acceleration data were filtered as described above and then compared to the acceleration computed by differencing thespeedometer data. For typical runs, the two curves were found to match within 0.01–0.02 g's even during large accelerations or decelerations. It was therefore concluded that vehicle pitch was not a significant factor in grade calculation for the test vehicles used in this study, both a 1991 Chevrolet Lumina and a 1991 Chevrolet Caprice.

An additional source of error was identified when grade angle calculations were done using Eq(3). It was found that during periods of high acceleration or deceleration, both the acceleration terms were large relative to the grade. In addition, numerical errors caused by subtracting one acceleration from the other often resulted in spurious grade angles on the order of 0.1 radian or larger. Use of filtered accelerometer data generally increased the differencing errors during the grade angle calculation. On the other hand, computations using the unfiltered acceleration data contained large amounts of noise, including frequent spikes with magnitudes greater than 0.1 radian.

In order to test the accuracy of the grade computation method, a series of runs were done on a loop containing two sections of elevated freeway and two surface streets. The circuit contained two on–ramps and two off–ramps with known[21] grades of 5–6 percent. Grade was then calculated using Eq(3) and unfiltered longitudinal accelerometer data. The computed grades compared well to the known grade locations, but contained a large number of spurious grades of equal or greater magnitude.

Filtering the computed grades removed a significant fraction of the false grade components, but did not eliminate those caused by differencing errors during periods of high acceleration or deceleration. In many cases, vehicle acceleration/deceleration was large just before or immediately after a ramp, and attempts to eliminate false grades in these regions eliminated or reduced grades from the ramps as well.

An alternative method was developed that successfully eliminates both noise and differencing errors from the computed grade, while retaining the actual grades. It consists of the following steps:

1. Compute the grade using Eq(3) with unfiltered longitudinal accelerometer data and differenced speedometer data.

2. Compute the elevation change each second using the equation,

$$\frac{D\ Elevation}{Dt} = Grade*Velocity(t),$$

   and numerically over time in *n*–second blocks. (Speedometer data are used to provide the velocities.)

3. Based on known data, such as the ramp tests described above, determine a cutoff value for the elevation change that is exceeded only by the real grades.

4. For each data point in an n-second block with an elevation change greater than the cutoff value, compute the m-second moving average grade. For all points outside such blocks, assign grade a value of zero.

Using $n = m = 5$ seconds, it was found that cutoff values ranging from 3.5 to 7.5 feet per five-second interval would effectively distinguish real from spurious grades. Each test vehicle was found to have its own characteristic cutoff value.

The utility of elevation change as a criteria for distinguishing grades appears to be due to its functional form rather than some underlying physical relation, especially since computations using this method for more than a few blocks generally produced erroneous absolute elevations. Regions with grade noise tend to produce small elevation changes due to the averaging effect of the integration process. Regions with errors due to large changes in acceleration and/or deceleration also have velocity values that are changing rapidly. If velocity is increasing or decreasing rapidly, it will generally be small at one end of the integration interval. Integration over such a region will also produce a small value. The elevation change integral thus effectively removes both noise and differencing errors from the computed grade angle. An application of this method is shown in Figure 6-1 for the test circuit containing four freeway ramps (two up-ramps and two down-ramps). The squares in the figure show qualitatively where a grade was present, as determined by an on-board observer. The curve shows grade as measured using the previously described algorithm. A more quantitative test of the measurement technique is presented in the next section.

6.2 Sample Grade Determination

Accelerometer and speed data were collected in the greater Los Angeles area early in 1992 through the use of an instrumented 1991 Chevrolet Caprice. Instrumentation of the Caprice was virtually identical to that of the Lumina except that in the Caprice accelerometers were mounted, for convenience, in the glove compartment. Data acquisition configuration, sampling rate and other aspects of the acceleration and grade measurements are essentially the same as in the Lumina.

Approximately 200 preselected routes were driven, comprising about 28 hours of driving. From this set of routes, a sample of 12 was chosen at random and grade was calculated using the methodology described in the previous section. It was found that most non-zero grades were very brief, apparently corresponding to freeway on/off ramps and similar minor changes. Only one section of extended grades was observed. This unusual section, a part of LA route number 05294, was selected for further examination.

The overall route driven was about nine miles long. The calculated grades for the route are shown in Figure 6-2. The abscissa in the figure is the distance, in miles, from the start of the route. The

Figure 6–2

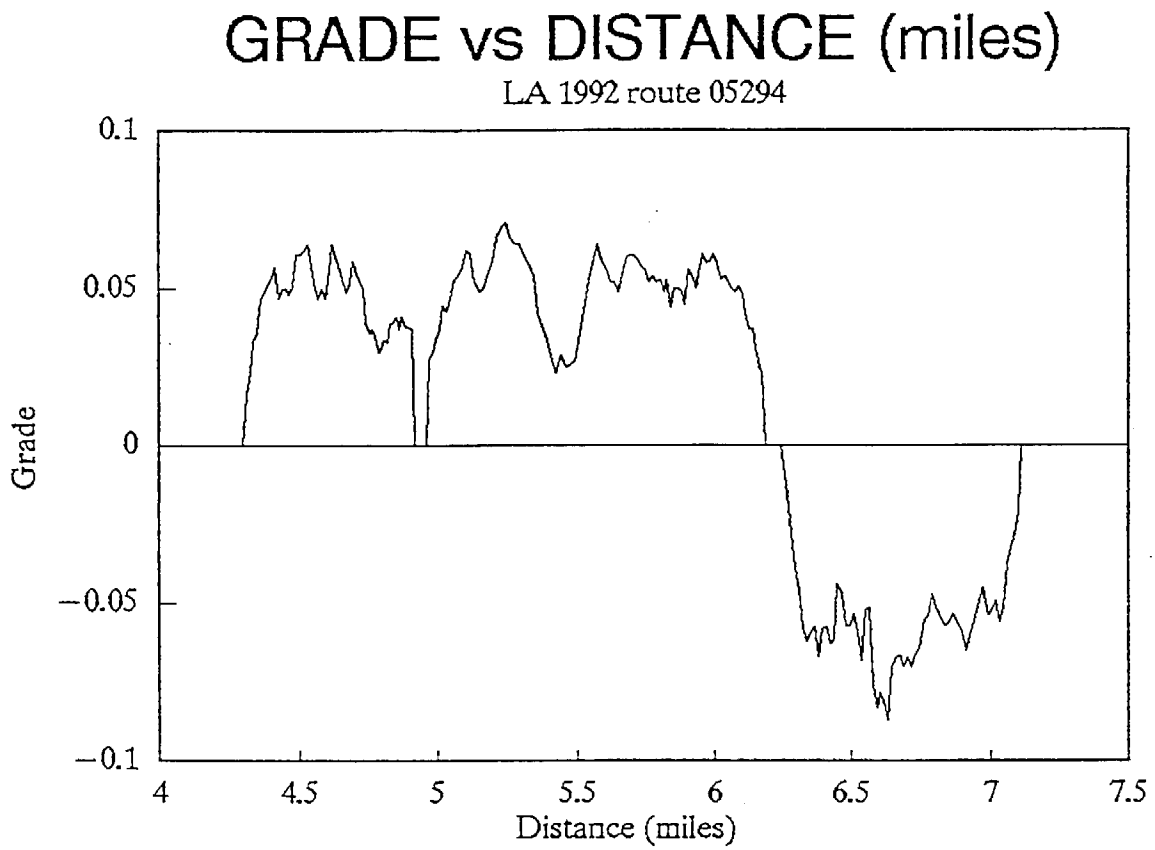

regions of greatest interest are the upgrade section from about mile 4 to mile 6 and the downgrade section from about mile 6 to mile 7.

Figure 6–3 shows the relevant portions of the route, Colima Road, highlighted on 7.5′ USGS topographic maps for the Whittier and La Habra quadrangles. The direction of travel was to the northeast. Marked as perpendicular lines across the route are the point where the elevation of Colima road is about 300 feet (which appears to be start of a significant grade); the crest of the Puente Hills, which is about 800 feet; and the point where the elevation drops to about 600 feet. The corresponding distances, measured from the map, are 1.88 miles for the upgrade and 0.6 miles for the downgrade. These distances and elevation changes can be used to estimate average road grades over each section.

The average upgrade is calculated (from the topographic map) to be,

$$\frac{(800\text{ ft}-300\text{ ft})}{1.88\text{ miles}} \times \frac{\text{mile}}{5280\text{ ft}} = 0.050 \text{ or } 5.0 \text{ percent grade.}$$

The average downgrade is calculated to be,

$$\frac{(600\text{ ft}-800\text{ ft})}{0.6\text{ miles}} \times \frac{\text{mile}}{5280\text{ ft}} = -0.063 \text{ or } 6.3 \text{ percent grade.}$$

Figure 6-3

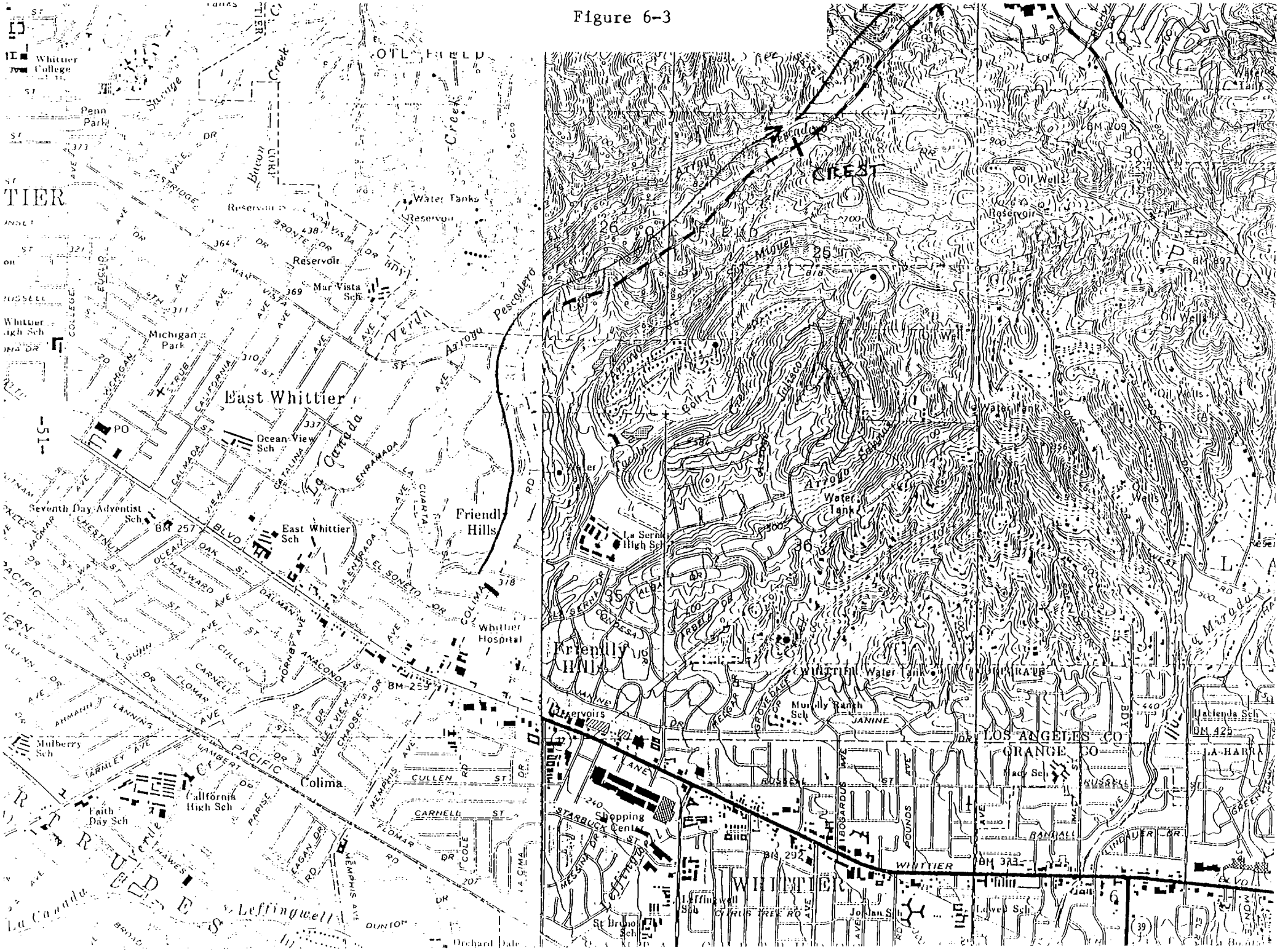
Whittier College
Penn Park
Bacon Creek
Water Tanks
Reservoir
Mar Vista Sch
Michigan Park
East Whittier
Ocean View Sch
La Cañada
Seventh Day Adventist Sch
East Whittier Sch
Friendly Hills
Whittier Hospital
Mulberry Sch
California High Sch
Faith Day Sch
Colima
Leffingwell
Arroyo Pescadero
Arroyo Verde
CREST
Oil Wells
Water Tank
La Serna High Sch
Whittier Water Tank
Murphy Ranch Sch
Shopping Center
WHITTIER
LOS ANGELES CO
ORANGE CO
Hacienda Sch
Lowell Sch
St Bruno Sch
Leffingwell Sch
Orchard Dale

These average grades may be compared with the corresponding grades measured by the instrumented vehicle, which are 4.6 percent and -5.5 percent, respectively.

The accuracy of grade measurements depends on a variety of factors, including calibration accuracy of accelerometers (this may be affected by the number and weight distribution of people in the car, amount of gas, etc.), speed calibration accuracy, length and magnitude of the grade being measured, and speed and acceleration of the vehicle. Based on these uncertainties, the specification accuracy of 0.01 g's of the accelerometers and the contributions to system error listed previously, it is believed that the accuracy of grade measurements as described herein may be no better than 1-2 percent of grade, i.e., a sustained true 5 percent grade should be measured as being between 3 and 7 percent.

The most recent tests of grade measurement included an examination of run-to-run consistency with the same driver and with different drivers. Tests were carried out with the accelerometers installed in a plastic box on the floor in the front passenger compartment, along the centerline of the car and near the estimated center of gravity. This location, just ahead of the mounting stand for the LCD display, is also the final location for the accelerometers.

Data were collected from more than a dozen drives, using three drivers who drove the Lumina repeatedly over the same route. The selected route originated in downtown Sacramento and ended in the Pocket Area of Sacramento and was approximately 7.75 miles in length. A comparison of the results for each of two drivers is shown in Figure 6-4.

The grades shown in the figure are based on the algorithm described earlier in this section, with the additional constraint that for speeds under 25 mph, with the absolute magnitude of lateral acceleration in excess of 0.25 g's, no grades are computed. This screening is necessary to avoid artifactual grades that result from measurements made during tight cornering maneuvers. Both aspects of the data processing are embodied in a FORTRAN program that is also used to compute second-by-second mass emissions of pollutants. (The custom program, written by Sierra, is called "LUMINA_EMIS.FOR" and is described in greater detail in the following section.)

The resulting graph suggests that the major grade changes indicated for the route tend to be reproduced from run to run. However, the resulting measurements are subject to the limitations described earlier. Based on these and other results, it is believed that major grades, i.e., those having an absolute magnitude of about 2-4% or more, can be identified repeatedly using the installed measurement system along with post-processing of the data. To document more precisely the accuracy and limitations of grade measurements using the Lumina, additional testing would be required on roads having known grades.

Figure 6-4

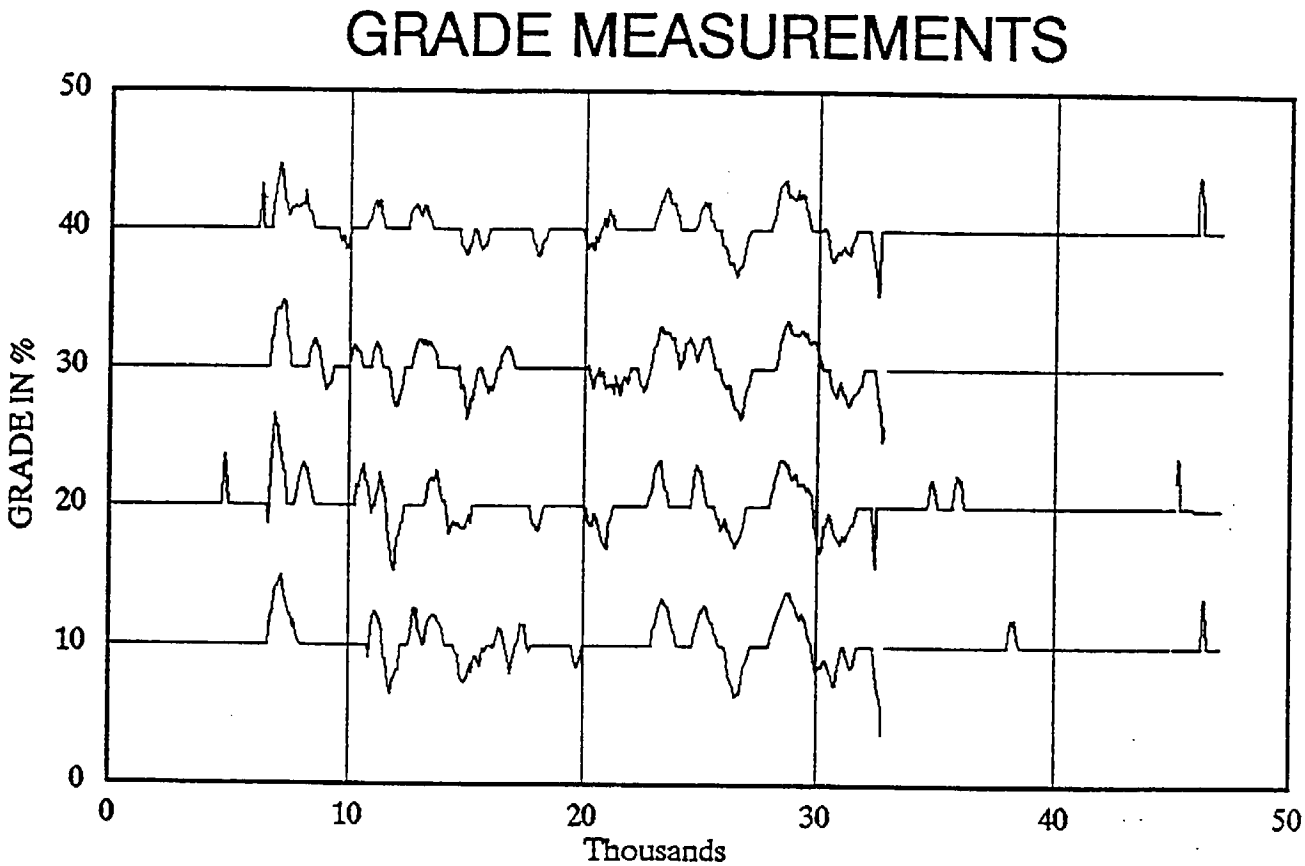

ROUTE DISTANCE, FT
REPEATED GRADE MEASUREMENTS BY DRIVER A AND B, LISTED TOP TO BOTTOM
RUN NOS. 07206 (B), 07200 (B), 071611 (A), AND 07165 (A)
ARE OFFSET BY 10%, 20%, 30% AND 40%, RESPECTIVELY.

7. MEASUREMENT OF EXHAUST GAS CONCENTRATIONS

7.1 Introduction

In order to provide second-by-second measurements of exhaust concentrations, the Lumina has been equipped with a portable four-gas analyzer. Measured gas concentrations can be used to examine modal effects on exhaust gas concentrations of carbon monoxide (CO), carbon dioxide (CO_2), hydrocarbons (HC), oxygen (O_2) and air/fuel ratio (computed from the four gases). In addition, gas concentrations can be logged for post-processing together with measured engine parameters to determine second-by-second mass emissions, grams of emissions per mile, fuel economy, etc. The latter calculations can be performed using the the provided FORTRAN program. An additional preprocessing program, written in "C", to screen unwanted ASCII characters from the output of the gas analyzer is also provided.

Two control setups are provided for use with the gas analyzer. "LUMGAS" provides for logging of all gas concentrations on a second-by-second basis. "HC" provides for near real time display of hydrocarbon concentrations under 100 ppm. In the parlance of Control, "HC" provides for parsing of the serial data from the gas analyzer in real time, while "LUMGAS" does not.

Summary results are provided for more than a dozen drives, all performed by three drivers while driving on the same route under similar traffic conditions in Sacramento. Detailed second-by-second emissions data, calculated using the preprocessing and analysis programs, are provided, both graphically and in computer readable form, for several of the drives.

7.2 Description of Instrumentation

Plumbing

The Lumina has been equipped with a four-gas analyzer (MPSI, Model PGA9000) to monitor exhaust gas concentrations while driving. The analyzer is installed on the front seat of the car, as depicted in Figure 7-1. It is powered by 12 volts DC from the cigarette lighter outlet.

Three plumbing lines attach to the PGA9000[22]. All three have been modified for the custom, semi-permanent installation in the Lumina. (The original tubing has also been provided in the event that ARB wishes to operate the analyzer elsewhere.)

Figure 7-1

Layout of Exhaust Gas Analyzer Installed in the Lumina

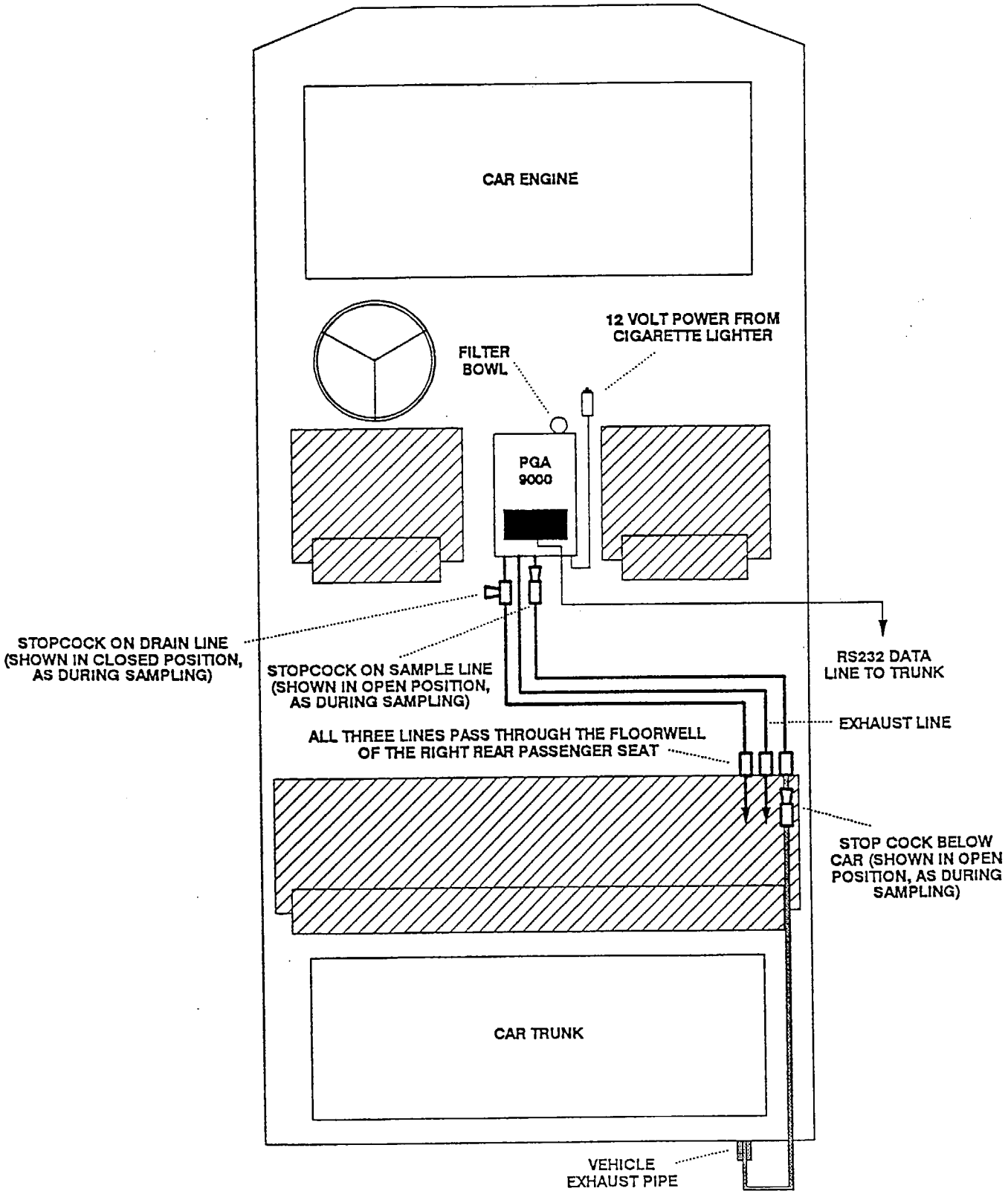

The first line is used to draw an exhaust sample into the gas analyzer from the exhaust pipe. The sample is first drawn through a 3/8 inch I.D. stainless steel tube installed under the floor pan of the vehicle. The upstream end of the tube has been bent 180 degrees and inserted up the exhaust pipe a distance of about 5 inches to avoid dilution of exhaust by ambient air. The downstream end of this pipe terminates at a brass stopcock which is located under the car, approximately beneath the right rear passenger seat. This stopcock is intended to provide a measure of safety to ensure that no exhaust gases are allowed to enter the vehicle unless sampling is desired. The stopcock is normally kept closed, with the yellow control handle oriented perpendicular to the tubing. For sampling, the stopcock is first opened by rotating the handle 90 degrees so it is aligned with the tubing. Downstream of the stopcock, the sample is conveyed by rubber tubing, except for a four-inch metal pipe used to convey all three plumbing lines through the floor and into the passenger compartment at the right rear floor well.

Beyond the entry tubing, the sample line is again rubber tubing and attaches to a second stopcock, which operates similar to the first. This stopcock is used by the operator (in the driver's seat or the front passenger seat) to shut off flow through the sample line when the gas analyzer drain is flushed. (In the original design of the gas analyzer, a crimp-type valve was supplied to compress the tubing and shut off flow. However, the stopcock was found to provide better assurance of a tight seal.) Downstream of the second stopcock, a short length of tubing brings the sample to the analyzer.

The gas analyzer is equipped with a filter bowl that serves the dual functions of filtering out large particles by means of a replaceable paper filter (extra filters provided by MPSI have been included with the materials provided) and condensing moisture that may be present as the gases cool along the sample line. As described in the MPSI operator's manual, <u>emptying the filter bowl periodically is a critical maintenance function</u>. (Flush warnings and simple steps to empty the filter bowl by backflushing are described further below.)

After the sample has passed through the filter bowl, it is analyzed by the optical bench (in the case of CO, CO_2 and HC) and the conductimetric cell (for O_2) and exhausted from the instrument through a port labeled "exhaust." A rubber tube, the second of three from the analyzer, has been installed from the analyzer's exhaust port to the right rear foot well from whence the exhaust sample is passed out of the vehicle and to the atmosphere.

The third rubber tube is a line that periodically is used during backflush of the filter bowl upon operator demand to convey condensate from the filter bowl through the floor and out of the vehicle. To avoid leakage of air into the analyzer during normal sampling, a brass stopcock, similar to the two on the sample line, has been installed on the drain line. During normal sampling runs, both stopcocks on the sample line are kept open and the one on the drain line is closed. When it becomes necessary to flush the filter bowl, the status of the two stopcocks near the analyzer is reversed, i.e., the drain line is opened and the sample line is closed, to ensure that condensate passes out the drain line and not into the sample line.

In the single pump PGA9000, flush warnings are programmed into the firmware of the MPSI, and occur precisely every 600 seconds (10 minutes) and last for 10 seconds. During this period, no gas analyses are performed. After 30 minutes, sampling terminates and a mandatory flush warning is displayed. No sampling is performed until this flush is completed.

Because of the mandatory flush warnings and the loss of data for a brief period each 600 seconds, it is recommended that data collection be started manually and simultaneously for both the gas analyzer and the data logging program. (The data logger can be easily configured to commence data collection upon a keypress; the gas analyzer can be flushed, the stopcocks returned to position for sampling and then, upon keypress, the sampling is resumed until the next 600-second warning.

Electrical Connections and Serial Data Flow Control

There are two electrical connections to the gas analyzer. The power connection via the Lumina's cigarette lighter has already been mentioned. The gas analyzer is turned on simply by plugging it in to the outlet. After a warmup period of about 4-5 minutes, the optical bench stabilizes, and the instrument automatically zeroes, provides a warning to the operator to drain the filter bowl, and then begins sampling. Operation of the gas analyzer with the car engine off is possible but it is NOT recommended, as the battery drain is excessive and the battery's reserve power may be consumed.

The gas analyzer has a serial port which has been configured to exercise flow control or "handshake" with the data logging program. The MPSI's internally required protocol for handshaking is described in a memo written and provided by Nick Zayan of Sensors Inc. (see Appendix F).

The "pinout" from the PGA-9000's serial port was not available from MPSI, but a special serial cable was adapted which provides the two-way data communication needed. This cable is neither straight-thru nor null-modem, but is custom-built for the MPSI and an RS-232 device. The cable should be used only in the orientation in which it is provided (one end is labelled MPSI), and no substitute cables or other connectors should be used. The wiring connections for the cable are shown in Appendix G.

A "setup" has been prepared for Labtech Control entitled, "LUMGAS*," which can be used with the gas analyzer. This setup causes the PC in the car's trunk to prompt the MPSI once each second to send a stream of data to the PC. The MPSI responds to the prompt by sending a stream of data resembling that normally sent by a Digital Equipment Corporation DTE device. The data received by Labtech Control are stored as a

---

* A second setup, entitled "HC", may be used to store and display HC data in near real-time, but only for concentrations below 100 ppm (generally adequate for cruise and very light accelerations only). This setup differs from LUMGAS in that it parses the data stream from the PGA9000 for HC ppm values only, thus allowing a real-time display.

"character" type file, and have been given the suffix "G" (for "gas") to distinguish them from other LTC files.

The protocol (baud rate, parity, etc.) for the data exchange is specified in three areas that must all be consistent: the mode statement of the config.sys file of the PC, the RS232 option file of Labtech Control's configuration, and MPSI's input option screen.

The data stream from the MPSI merits some discussion because, while serial, it is not strictly an RS232 ASCII data stream. Instead, it contains control characters and checksums that render it incompatible with most ASCII text editors. A program has been written in "C" (computer readable copy has been provided) which can be used to strip out checksum characters and unusual control characters, leaving a normal ASCII file. The program is named "CVT" (for convert) and is run under DOS (not under the Windows DOS prompt, however), by typing the following at the DOS prompt:

CVT *oldname*G.prn *newname*G.dot

where:

CVT is the name of the program

*oldname*G.prn is the gas concentration character file generated and stored by Labtech Control

*newname*G.dot is the name assigned to the new gas concentration file and it is a true ASCII file; i.e., it can be edited by most file editing programs, imported as a text or number file into many spreadsheet programs and, most importantly, it can be read by the custom FORTRAN program (described below) along with a contemporaneously collected file of engine data to calculate second-by-second mass emissions

The suffix ".DOT" has been used to distinguish CVT output files from raw data files, but any other DOS-compatible suffix could be used.

Once gas files have been converted, they can be imported into a spreadsheet or other program, along with other data files, so that comparisons can be made between changes in engine parameters and changes in gas concentrations. In addition, second-by-second calculations may be made of mass emissions. The latter computations were originaly performed using a spreadsheet but can be done more quickly and efficiently using a custom FORTRAN program (copy provided in machine readable format), which is described in the following section.

An important consideration when using recorded gas concentration data is that the concentration data lag behind changes in the engine operation

by about 5 seconds*. This lag should be corrected for in any automated or manually performed comparisons of engine data and exhaust concentration data. In addition, the lapse of data for ten seconds during the display of the flush warning by the MPSI is NOT indicated in the dataset, but it must be accounted for as well. Both of these adjustments have been made in the FORTRAN program described in the next section. It is recommended that each drive be started and ended with at least a ten-second period of engine idle to allow the gas analyzer to reflect exhaust concentrations at the start of the run and to compensate, at the end of the run, for flushes during the run.

7.3 Calculation of Mass Emissions

A custom FORTRAN program entitled "LUMINA_EMIS.FOR" computed second-by-second mass emissions of CO, CO_2 and HC, and summary statistics for each drive. The program uses as input two data files, the file of engine parameters and the file of exhaust gas concentrations generated by Labtech Control, both when running the setup LUMGAS. The latter file should be input to the FORTRAN program only AFTER stripping out all control characters and checksum characters by running the convert program called "CVT."

The mass emissions calculation carried out in the FORTRAN program proceeds by the following steps, which are computed for each second of data collection (in all cases, gas data have been advanced by 5 seconds relative to engine data to compensate for the lag in gas measurements).

1. measure engine RPM
2. measure MAT sensor voltage and convert to absolute temperature
3. measure MAP sensor voltage and convert to pressure (this conversion is done within Control)
4. assuming an ideal gas, and using the results from steps 1-3, determine the theroetical maxumum number of moles of air going into the engine
5. multiply the result from step 4 by 0.75 to adjust for the volumetric efficiency of a typical real engine (this assumption is discussed further in Appendix H)
6. dividing by the average molecular weight of air, convert the result from step 5 into mass flow rate of air into the engine
7. using the Spindt equation[23] and the measured composition of exhaust gases, and assuming that the carbon weight fraction of the fuel is 0.866 (indolene), calculate the air-to-fuel mass ratio of the mixture charged to the engine
8. multiply the results from steps 6 and 7 to determine the mass flow rate of fuel charged to the engine
9. add the results from steps 6 and 8 to obtain the mass flow rate of the fuel-air mixture into the engine. Because the automatic transmission version of the Lumina does not use air

---

* According MPSI's Operators Manual, the PGA9000 response time is less than 8 seconds to 90 percent of reading. This delay is partially compensated for by advancing the gas analyzer readings by 5 seconds.

injection, this flow rate is equal to the mass flow rate of the exhaust

10. based on the fraction of fuel burned (from the Spindt equation[23]) calculate the mass flow rate of water in the exhaust and subtract this from the flow rate calculated in step 9 to obtain the equivalent "dry" exhaust flow rate
11. using the measured concentrations of CO, CO_2, HC and O_2 in the exhaust, and assuming the balance of the dry exhaust is N_2, compute the average molecular weight of the exhaust
12. divide the result from step 10 by the result from step 11 to determine the molar flow rate of dry exhaust
13. multiply the concentrations of CO, CO_2, and HC (each expressed as %) by the molar flow rate of dry exhaust to obtain the molar flow rates of the respective species, and divide each by its molecular weight to obtain the the mass flow rate (for HC, molecular weight is assumed to be that of hexane, since propane is the calibration gas and the analyzer uses an internally set hexane-to-propane equivalency factor of about 0.5)[24]
14. compute instantaneous fuel economy for each second of operation

In addition to the computations of second-by-second data described above, the FORTRAN program computes the following summary statistics for the entire drive:

- length of drive (in seconds and miles);
- average and maximum speeds;
- maximum and minimum on-road accelerations;
- positive kinetic energy of acceleration;
- number and percent of seconds with acceleration greater than 3.3 mph/sec (the maximum acceleration in the LA-4 driving cycle);
- overall gallons of fuel consumed and miles per gallon for the drive; and
- exhaust mass emissions, expressed as grams of CO and CO_2 and milligrams of HC, per mile.

The FORTRAN program also computes and provides an output of road grade expressed as a percent, on a second-by-second basis.

A sample printout of second-by-second engine data and exhaust concentration data from a sample drive, along with the corresponding printout of second-by-second mass emissions data computed using the FORTRAN program, are described in the next section and are provided in hard copy in Appendix I. These sample data are also provided in computer readable format on floppy disk. Section 8 also includes a summary of experimental data including 14 drives with three different drivers.

8. SAMPLE DATA SETS

8.1 Grade Data

A sample data set, provided in Appendix J, has been collected using the data acquisition system, and is shown for illustrative purposes in this section. Specifically, the appendix contains a multi-page printout of the ASCII file L06095.PRN, which describes an approximate 15-minute trip from downtown Sacramento to a southern part of Sacramento and back. Figure 8-1 shows the time-speed trace for this typical commute, which includes both surface street driving and freeway driving.

The text file begins with a four-line header, identifying the data set as a data file collected using Labtech Control. The time, 15:23:45.64, and date, 6-09-1992, correspond to the start of the run. While not shown in the header, the end of the run is also recorded by the date and time shown in the DOS directory of the C: drive.

Figure 8-1

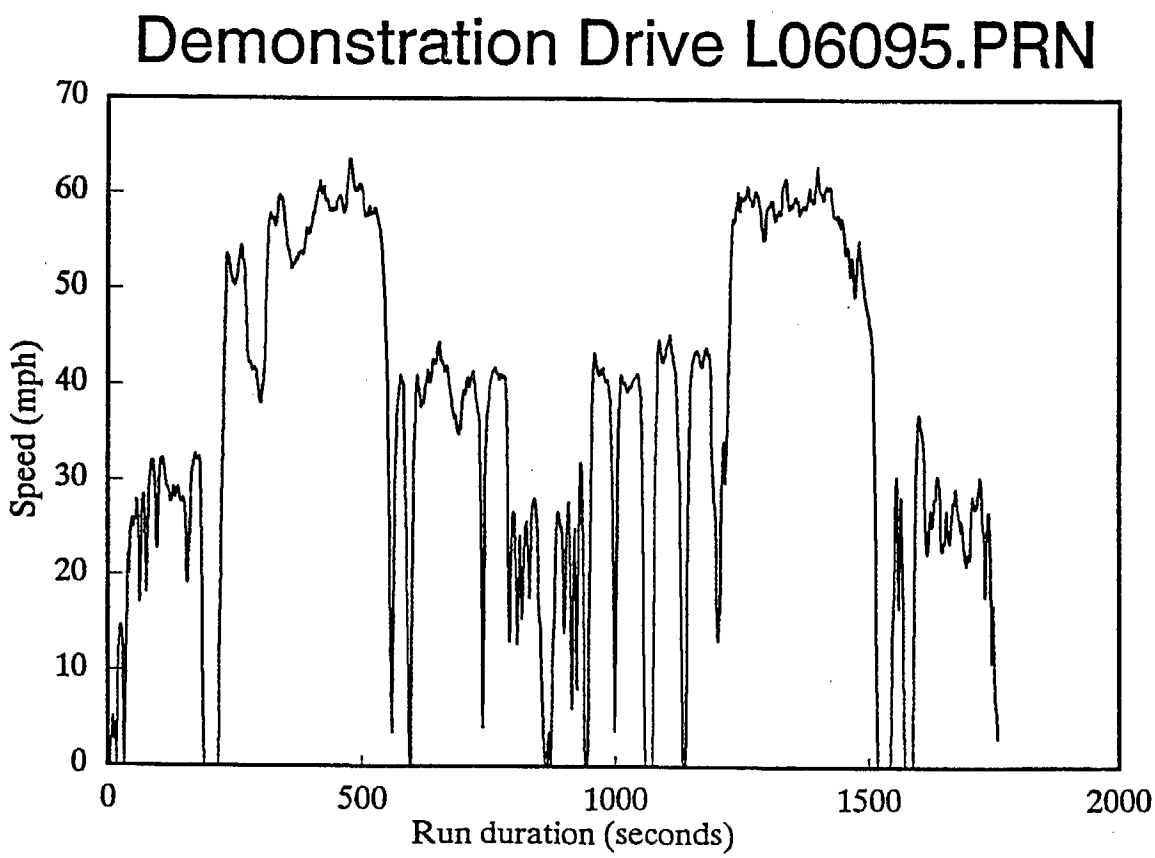

The next two rows list the variables saved and the corresponding units. These are acceleration from accelerometer number 1 (longitudinal acceleration) in g's, acceleration from accelerometer number 2 (lateral acceleration) in g's, speed in mph, manifold air pressure sensor output in volts, average O_2 sensor output in volts, throttle position sensor output in volts, run duration in seconds, cumulative time since midnight in seconds, and engine speed in rpm. Following this two-line listing are the data. Each row or record corresponds to one second in the run, starting at time zero and ending, in this case, with second number 1759.

8.2 Emissions Data

A series of fourteen drives (seven round-trip drives) were conducted to evaluate hypothesized differences in emissions associated with known or suspected differences in driving behaviors. All drives were done using the instrumented Lumina with exhaust concentrations and engine parameters measured using the PGA9000 and with LUMGAS setups in Control. All drives were during off-peak hours, and all were between the same point in downtown Sacramento and a residential destination about 8.75 miles away in south Sacramento.

Complete data sets for one of these drives, no. 07206, are provided in Appendix I. Graphs of second-by-second CO percents and speed data for this and two other drives are shown in Figures 8-2 through 8-4.

Figure 8-2

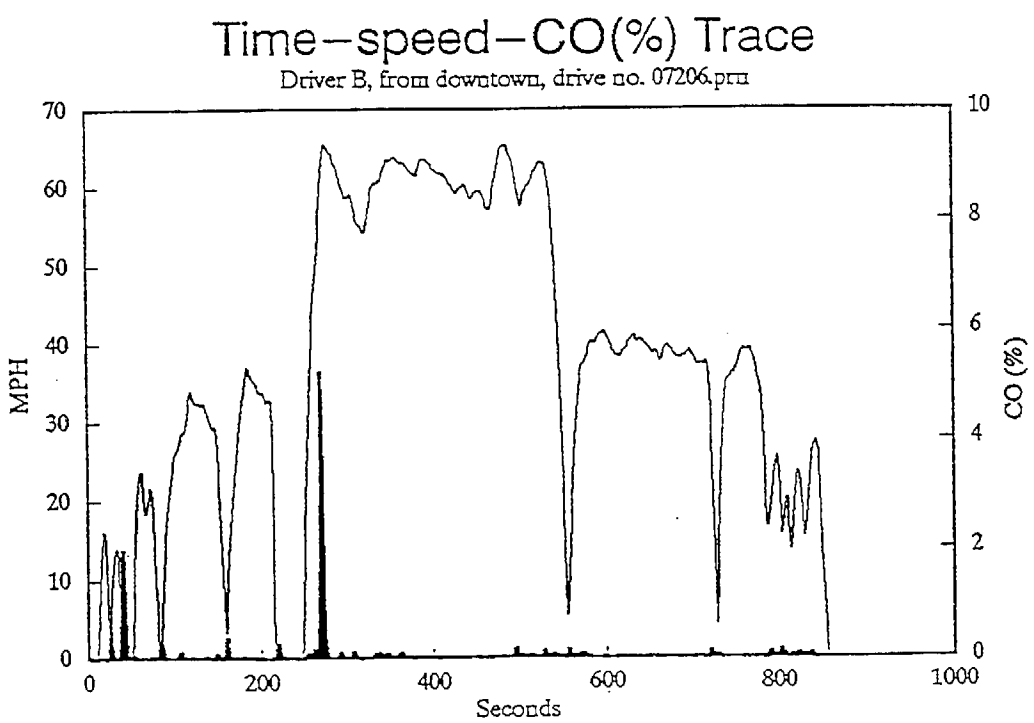

Overall CO emissions 2 g/m
Line plot represents speed (left axis); area plot represents emissions (right axis).

Figure 8-3

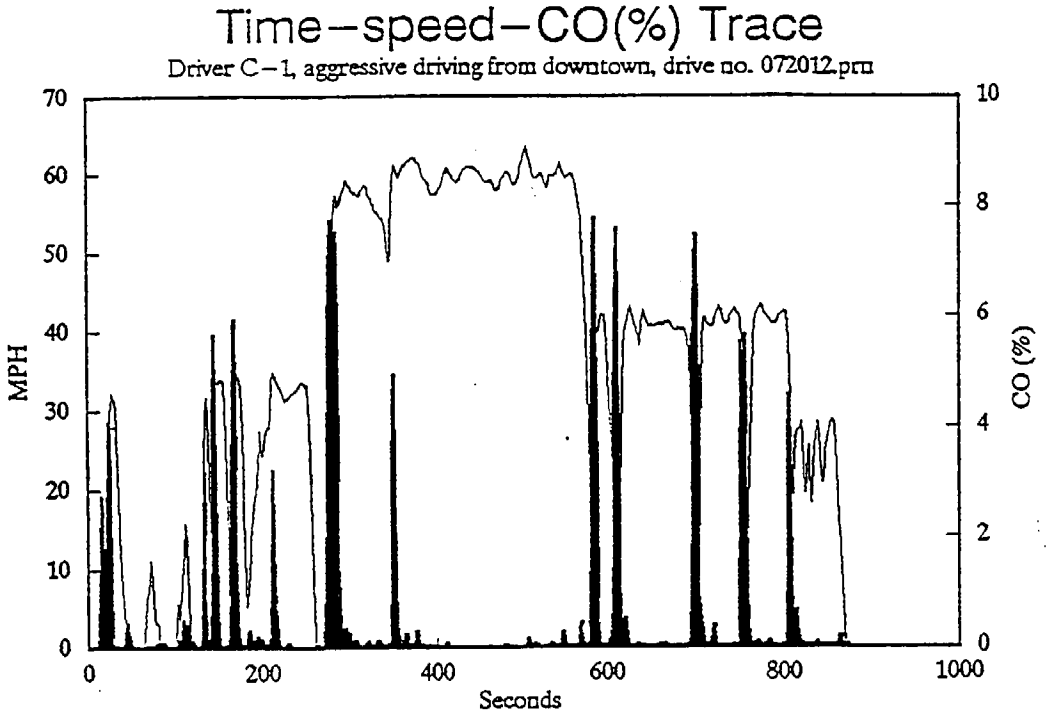

Overall CO emissions 36 g/m
Line plot represents speed (left axis); area plot represents emissions (right axis).

Figure 8-4

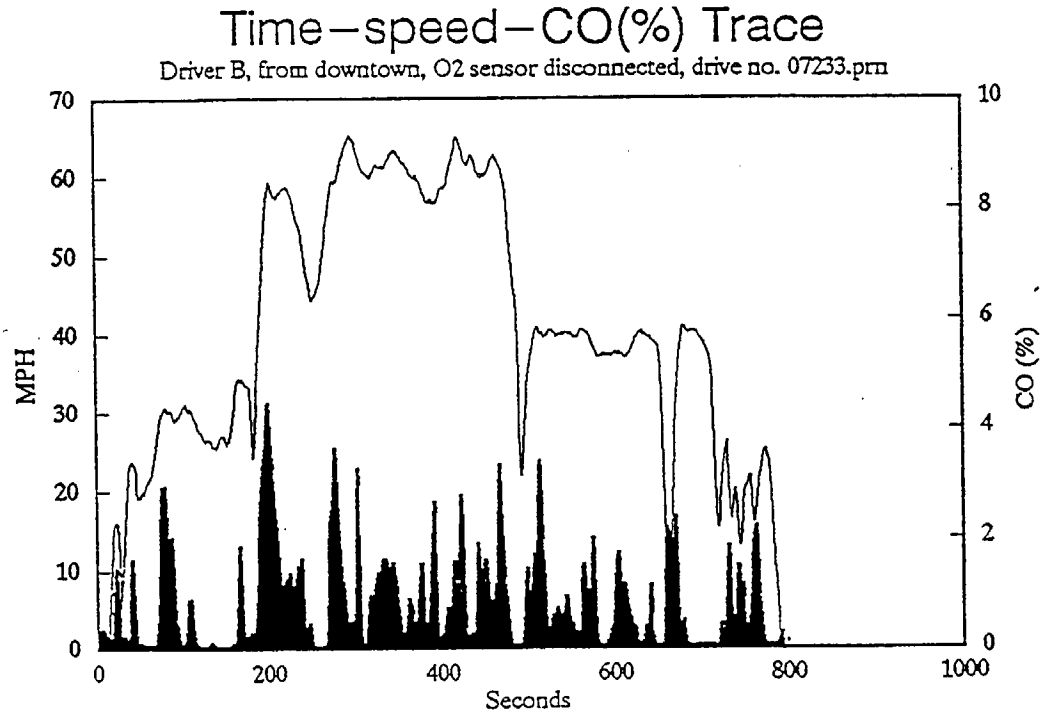

Overall CO emissions 21 g/m
Line plot represents speed (left axis); area plot represents emissions (right axis).

Driver "B," who was instructed to drive "as you normally would," is a relatively smooth driver who tends not to accelerate or decelerate very hard compared to many other drivers. Driver C is a driver with motor vehicle racing and testing experience. During this test, in which the driver was designated as C-1, the Lumina was driven with the maximum aggressiveness possible while nominally observing traffic laws, with all accelerations being made at wide open throttle, unless traffic conditions dictated otherwise. The differences in exhaust CO concentrations from the Lumina when driven by these two drivers, shown in Figures 8-2 and 8-3, are apparent.

In a related test, the O_2 sensor in the Lumina was disconnected, forcing the emission control system to operate in open loop mode and the vehicle was again driven "normally" by Driver B. The resulting trace of CO concentrations, shown in Figure 8-4, may be compared with the two previous figures.

Figures 8-5 through 8-7 show the second-by-second mass emissions of CO that correspond to the second-by-second exhaust CO concentrations. The resulting graphs are very similar in appearance, although it is sometimes observed that high CO concentrations can result even when exhaust emission rates are low, due to low gas flows (when, for example, throttle is closed during a hard deceleration but fuel is still being fed to ensure smooth idle and rapid power availability upon demand).

Figure 8-5

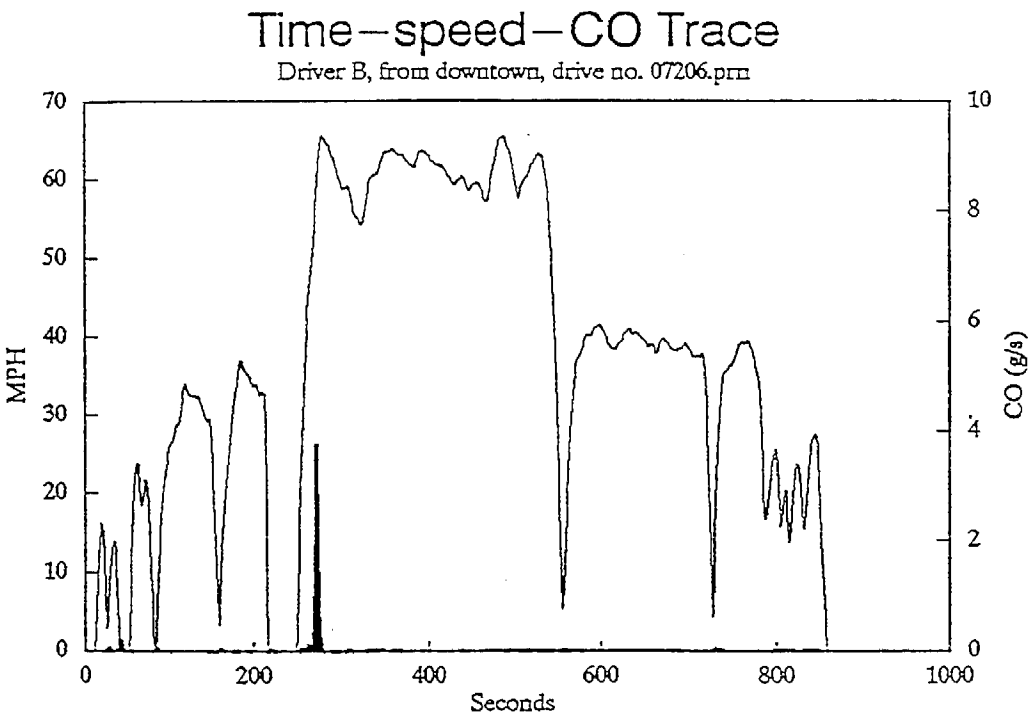

Overall CO emissions 2 g/m
Line plot represents speed (left axis); area plot represents emissions (right axis).

Figure 8–6

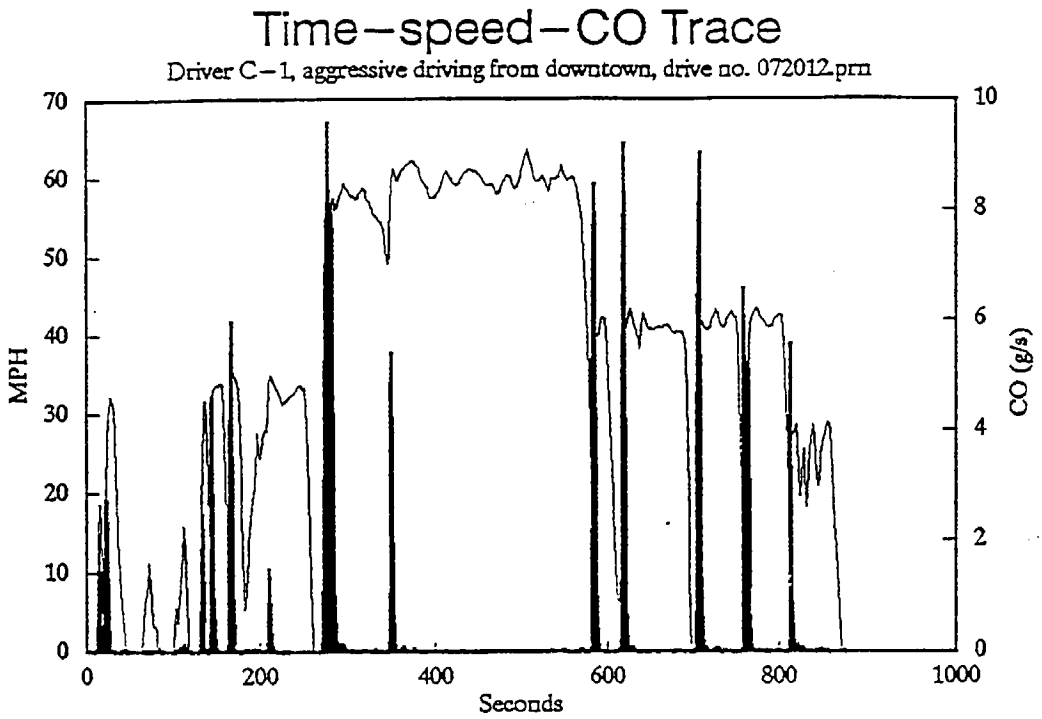

Overall CO emissions 36 g/m
Line plot represents speed (left axis); area plot represents emissions (right axis).

Figure 8–7

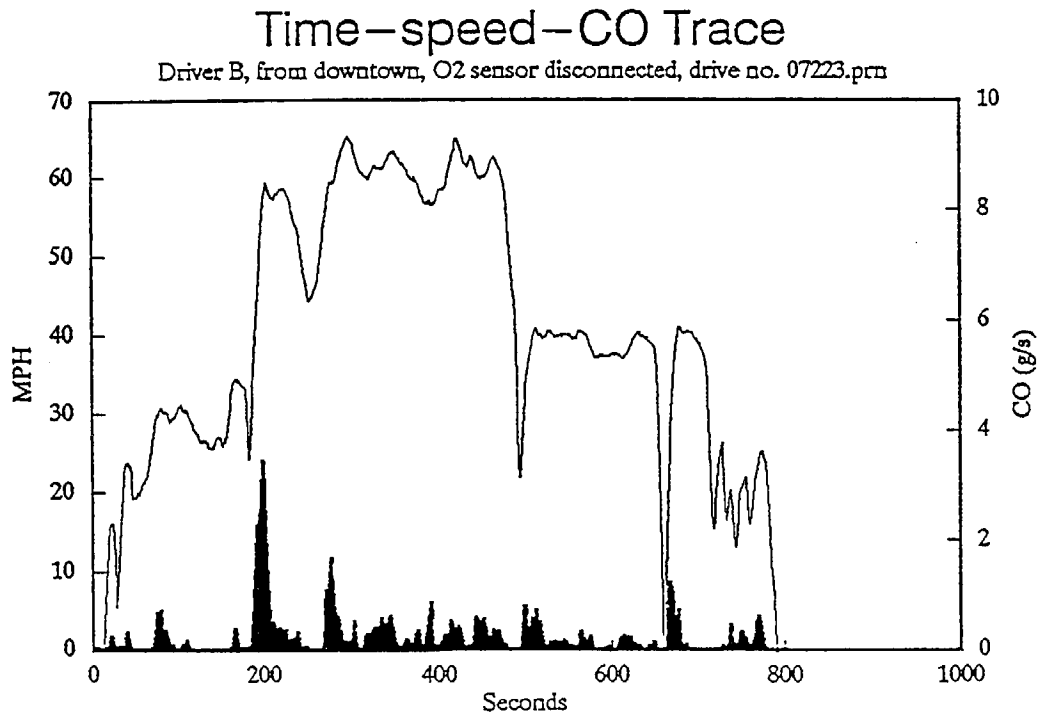

Overall CO emissions 21 g/m
Line plot represents speed (left axis); area plot represents emissions (right axis).

Finally, Table 8-1 provides a summary of all fourteen drives, including the three drives already described. Note that emissions results, expressed in terms in grams per mile, are quite consistent in repeat drives and for all of the species reported. (Note that in comparing pairs of drives, it is most appropriate to compare drives either "to" or "from" downtown, as listed in the table.)

Table 8-1

SUMMARY OF LUMINA DRIVES WITH EMISSIONS DATA, THROUGH 8/1/93

DRIVER	DIRECTION TO OR FR DOWNTWN	ROUTE	TIME (SEC)	DIST (MI)	AVG SPD MPH	MAX SPD MPH	MAX ACC G's	MIN ACC G's	PKE (miles/ hr^2)	OVER_FTP_ACC #OF SECS	%OF Time	# OF Gal.	EMISSIONS PER MILE EXHAUST mpg	EXHAUST g/mi	HC mg/mi	CO2 g/mi	CO g/mi
A	FROM	0716-5	855	8.79	37.0	65.0	0.258	-.211	22735.8	21.0	2.4362	0.44	19.8	1923.23	68.08	444.85	4.39
A	TO	0716-8	936	8.81	33.9	66.8	0.280	-.307	26138.9	42.0	4.4586	0.48	18.2	2069.89	73.85	480.59	6.95
A	FROM	0716-11	893	8.73	35.2	65.8	0.250	-.263	29224.0	33.0	3.6707	0.49	17.9	2071.32	111.26	485.77	9.24
A	TO	0716-14	872	8.76	36.1	65.9	0.274	-.263	24277.8	30.0	3.4130	0.49	17.9	2080.59	75.66	493.24	4.82
B	FROM	0720-0	884	8.81	35.9	63.6	0.238	-.200	16485.5	12.0	1.3498	0.49	17.9	2085.05	53.37	496.79	2.24
B	TO	0720-3	930	8.82	34.2	64.5	0.245	-.250	18427.8	23.0	2.4546	0.55	16.2	2277.88	34.82	549.37	2.57
B	FROM	0720-6	865	8.75	36.4	65.6	0.231	-.445	17747.6	13.0	1.4925	0.47	18.6	2293.46	60.35	477.82	2.36
B	TO	0720-9	899	8.78	35.2	64.6	0.250	-.234	18566.2	17.0	1.8805	0.48	18.4	2328.96	36.20	486.10	0.82
C-1	FROM	0720-12	881	8.74	35.7	63.6	0.389	-.365	24419.6	49.0	5.5305	0.58	15.0	2603.04	852.20	538.91	35.72
C-2	TO	0720-15	938	8.76	33.6	58.9	0.192	-.346	17366.5	8.0	0.8484	0.48	18.2	2160.46	94.75	489.92	1.36
C-1	FROM	0722-3	797	8.73	39.5	63.5	0.424	-.363	23460.2	39.0	4.8568	0.58	15.0	2516.26	948.19	532.95	38.57
C-2	TO	0722-6	989	8.77	31.9	56.1	0.198	-.284	16672.1	12.0	1.2060	0.56	15.7	2472.09	18.19	567.12	1.81
B*	FROM	0723-3	801	8.72	39.2	65.3	0.242	-.274	15495.0	6.0	0.7435	0.51	17.0	2187.21	408.64	493.58	20.80
B*	TO	0723-6	937	8.73	33.6	61.8	0.247	-.282	18142.6	21.0	2.2246	0.59	14.7	2500.94	501.48	564.37	27.21

A,B AND C DESIGNATE 3 DRIVERS. DRIVERS A AND B WERE INSTRUCTED "DRIVE AS YOU NORMALLY WOULD."
DRIVER C DROVE AGGRESSIVELY (C-1) AND PASSIVELY (C-2). B* DRIVEN WITH O2 SENSOR DISCONNECTED.

Sierra Research
August 3, 1993

9. REFERENCES

1. "Bridging the Present to the Future in Personal Transportation – The Role of Internal Combustion Engines," Nick E. Gallopoulos, SAE Paper No. 920721.

2. "Comparison of Emission Inventory and Ambient Concentration Ratios of CO, NMOG, and NOx in California's South Coast Air Basin," Eric M. Fujita, et al, Journal of the Air and Waste Management Association, 42:264 (1992).

3. "Use of a Chase Car to Characterize Driving Patterns," Thomas C. Austin, and Frank Di Genova, presented to the AWMA Conference on Transportation Modeling: Tips and Trip-Ups, March 12, 1992.

4. "Feasibility Study of an Alternative System for Reading Fault Codes from Vehicles Travelling in the Los Angeles Basin," prepared for the California Air Resources Board by Sierra Research, July 13, 1993.

5. "Reading Fault Codes and Transmitting via Hughes Radiotransponder," memo from Tom Austin and Frank Di Genova of Sierra Research to Mark Carlock, ARB Mobile Source Division, July 20, 1993.

6. Report in preparation.

7. "ROMDISK User's Manual, Model PCF-1," Revision 2.0, January 2, 1992, Curtis, Inc.

8. "DAS-8 and DAS-8PGA User's Manual," Metrabyte Part No. 24810, Release Date 1/1/88, and "User Guide for the DAS-8, DAS-8PGA, & DAS-8/AO Data Acquisition & Control Boards," Part Number 24810, Revision C, June 1991, Keithley Metrabyte Corp.

9. "1991 Chevrolet Lumina Service Manual," General Motors Corporation, June 28, 1990.

10. "L/T Control, User Guide," Manual Rev. 8/92, Laboratory Technologies Corporation, Wilmington, MA 01887, 1992.

11. "L/T Control, Reference Manual," Manual Rev. 8/92, Laboratory Technologies Corporation, Wilmington, MA, 01887, 1992.

12. "Microsoft MS-DOS, Version 6.0, User's Guide and Reference, Condensed Edition," Microsoft Corporation, 1993.

13. Personal communication with Paul Van Valkenburg, consultant to Sierra Research.

14. "Chevrolet Caprice Service Manual," General Motors Corporation.

15. "Understanding Automotive Electronics," Texas Instruments, Inc. 1984.

16. See, for example, "Introduction to Digital Signal Processing," Mark J.T. Smith, John Wiley and Sons, NY, 1992.

17. Memorandum to Mark Carlock, ARB Mobile Source Division, from Tom Austin and Frank Di Genova, Sierra Research, July 20, 1993.

18. Personal communication with Rick Fowler of Laser Atlanta, May 1993.

19. Lucas Novasensor Solid State Accelerometer, Signal Conditioned, NAS Series, Novasensor, Fremont, CA.

20. "Processing Measurements from Vehicle-borne Accelerometers in Traffic Engineering Applications," K. Shoarian-Sattari et al, Traffic Engineering and Control, September 1988.

21. Personal communication with California Department of Transportation, June 1992.

22. "Operator's Manual for the PGA-9000," MPSI, 1993.

23. "Air-fuel Ratios from Exhaust Gas Analysis," R.S. Spindt, SAE Paper No. 650507.

24. Personal communication with Nick Zayan of Sensors Inc, June 1993.

APPENDIX A

Instructions for Installation of Labtech Control

LABTECH/CONTROL INSTALLATION

Labtech/Control installation requires a VGA monitor. Any non-VGA monitors will cause the installation procedure to fail. Control is delivered from Labtech on separate media for either a DOS or a Windows installation. LT/Control version 4.1.1 for DOS was used for this installation. The distribution media comes on three 3.5" diskettes labelled:

Program Disk
Driver Disk #1
Password Disk

Installation is straightforward. Place the Program Disk in the drive and type: INSTALL. The installation decompresses and verifies the integrity of each file as it is copied from the distibution media to the hard disk so each disk takes 10-15 minutes to copy to the PC. The defaults were used so the software is located in C:\LTC. When all the files on the Program Disk have been copied and decompressed, the installation software prompts for the Driver Disk. Upon successful copy and decompression of the relevant files from the Driver Disk, the software notifies the user that the installation is complete.

At this point CONFIG.SYS and AUTOEXEC.BAT need to be verified. Config.sys should have the following statement in it (in addition to whatever else might be in the file):

DEVICE=CGISTUB.SYS

CGISTUB looks for CGI.CFG which designate two other device drivers that wil be automatically loaded: GSSCGI.SYS and IBMVGA12.SYS. All these files should reside in the C:\ root directory as they were placed there via the installation procedure.

Autoexec.bat needs the following statement:

C:\DRIVERS

Verify that DRIVERS.EXE is in C:\.

Before the VGA LCD monitor became available for the vehicle, a monochrome monitor was used witha Hercules controller. Although the following procedure is not recommended, should it become necessary to use a Hercules/monochrome monitor instead of the VGA monitor the software is intended to be used with, the following statement changes need to be made:

in CONFIG.SYS

```
remove ->    DEVICE=CGISTUB.SYS
add          ->    DEVICE=HERCBW.SYS
add          ->    DEVICE=VDI.SYS
```

in AUTOEXEC.BAT

```
remove ->    C:\DRIVERS
add          ->    C:\INIT_VDI
```

The files HERCBW.SYS, VDI.SYS and INIT_VDI.EXE are not on any of the Control distribution disks. They were cloned from a Labtech NOTEBOOK installation. These files and the changes for AUTOEXEC.BAT and CONFIG.SYS are available on the RUNTIME diskette in the \HERCULES directory. AUTOEXEC.HER and CONFIG.HER should be renames to autoexec.bat and CONFIG.SYS respectively and placed in the root directory. All other files referenced should also be placed in the root directory.

It is important to make sure the files called in CONFIG.SYS and AUTOEXEC.BAT are in C:\ as called by the procedure. LT/Control will not work unless these files are successfully called.

When you are satisfied that CONFIG.SYS and AUTOEXEC.BAT are correctly set up and all the relevant files are in the appropriate directories, reboot the PC. Set the default to C:\LTC and type GO. This will start the Control program and you will be asked for a Username and Password. Answering USER1 to both these questions will get you into Control.

To bypass the Username prompt, copy the contents of the Password Disk to C:\LTC. There are two files on the Password disk:

```
PASSWORD.EXE
LTC_USER.PRN
```

Invoke the PASSWORD program and follow the instructions in the Users Guide for setting up a superuser at level 3. The program will modify LTC_USER.PRN such that you will no longer be prompted for a username when you subsequently invoke LT/Control.

Once you have verified that this is working correctly, add the following lines to the end of your AUTOEXEC.BAT file to automatically start Control at bootup:

```
CD \LTC
GO
```

After LT/Control is properly installed, you may want to add a Digital-to-Analog Converter board. The following is a list of files that can be removed from the C:\LTC directory to save space. These files can be removed only after the desired Digital-to-Analog Converter board has been properly configured for LT/Control.

D16G1U10.TPL;1
D16G1X10.TPL;1
D16G2U10.TPL;1
D16G2X10.TPL;1
DA1401B.TPL;1
DA1401U.TPL;1
DA1401XA.TPL;1
DA1401XB.TPL;1
DA1401XC.TPL;1
DA1401XD.TPL;1
DA1401XE.TPL;1
DA1401XF.TPL;1
DA1401XG.TPL;1
DA1401XH.TPL;1
DA1401YA.TPL;1
DA1401YB.TPL;1
DA1401YC.TPL;1
DA1401YD.TPL;1
DA1401YE.TPL;1
DA1401YF.TPL;1
DA1401YG.TPL;1
DA1401YH.TPL;1
DA1402B.TPL;1
DA1402U.TPL;1
DA1402XA.TPL;1
DA1402XB.TPL;1
DA1402XC.TPL;1
DA1402XD.TPL;1
DA1402XE.TPL;1
DA1402XF.TPL;1
DA1402XG.TPL;1
DA1402XH.TPL;1
DA1402YA.TPL;1
DA1402YB.TPL;1
DA1402YC.TPL;1
DA1402YD.TPL;1
DA1402YE.TPL;1
DA1402YF.TPL;1
DA1402YG.TPL;1
DA1402YH.TPL;1
DA1601B1.TPL;1
DA1601B2.TPL;1
DA1601U1.TPL;1
DA1601U2.TPL;1
DA1601XA.TPL;1
DA1601XB.TPL;1
DA1601XC.TPL;1
DA1601XD.TPL;1
DA1601XE.TPL;1
DA1601XF.TPL;1
DA1601XG.TPL;1
DA1601XH.TPL;1
DA1601YA.TPL;1
DA1601YB.TPL;1
DA1601YC.TPL;1

DA1601YD.TPL;1
DA1601YE.TPL;1
DA1601YF.TPL;1
DA1601YG.TPL;1
DA1601YH.TPL;1
DA1602B1.TPL;1
DA1602B2.TPL;1
DA1602U1.TPL;1
DA1602U2.TPL;1
DA1602XA.TPL;1
DA1602XB.TPL;1
DA1602XC.TPL;1
DA1602XD.TPL;1
DA1602XE.TPL;1
DA1602XF.TPL;1
DA1602XG.TPL;1
DA1602XH.TPL;1
DA1602YA.TPL;1
DA1602YB.TPL;1
DA1602YC.TPL;1
DA1602YD.TPL;1
DA1602YE.TPL;1
DA1602YF.TPL;1
DA1602YG.TPL;1
DA1602YH.TPL;1
DA16G1YA.TPL;1
DA16G1YB.TPL;1
DA16G1YC.TPL;1
DA16G1YD.TPL;1
DA16G1YE.TPL;1
DA16G1YF.TPL;1
DA16G1YG.TPL;1
DA16G1YH.TPL;1
DA16G2YA.TPL;1
DA16G2YB.TPL;1
DA16G2YC.TPL;1
DA16G2YD.TPL;1
DA16G2YE.TPL;1
DA16G2YF.TPL;1
DA16G2YG.TPL;1
DA16G2YH.TPL;1
DAS16FXB.TPL;1
DAS16FXD.TPL;1
DAS16FXF.TPL;1
DAS16FXH.TPL;1
DAS16FXJ.TPL;1
DAS16FXL.TPL;1
DAS16FXN.TPL;1
DAS16G1.TPL;1
DAS16G1A.TPL;1
DAS16G1B.TPL;1
DAS16G1C.TPL;1
DAS16G1D.TPL;1
DAS16G1E.TPL;1
DAS16G1F.TPL;1

DAS16G1G.TPL;1
DAS16G1H.TPL;1
DAS16G1U.TPL;1
DAS16G2.TPL;1
DAS16G2A.TPL;1
DAS16G2B.TPL;1
DAS16G2C.TPL;1
DAS16G2D.TPL;1
DAS16G2E.TPL;1
DAS16G2F.TPL;1
DAS16G2G.TPL;1
DAS16G2H.TPL;1
DAS16G2U.TPL;1
DAS16XXA.TPL;1
DAS16XXB.TPL;1
DAS16XXC.TPL;1
DAS16XXD.TPL;1
DAS16XXE.TPL;1
DAS16XXF.TPL;1
DAS16XXG.TPL;1
DAS16XXH.TPL;1
DAS16XYA.TPL;1
DAS16XYB.TPL;1
DAS16XYC.TPL;1
DAS16XYD.TPL;1
DAS16XYE.TPL;1
DAS16XYF.TPL;1
DAS16XYG.TPL;1
DAS16XYH.TPL;1
DAS16XYI.TPL;1
DAS20AXB.TPL;1
DAS20AXU.TPL;1
DAS20BXB.TPL;1
DAS20BXU.TPL;1
DAS20CXB.TPL;1
DAS20CXU.TPL;1
DAS20DXB.TPL;1
DAS20DXU.TPL;1
DAS20EXB.TPL;1
DAS20EXU.TPL;1
DAS20FXB.TPL;1
DAS20FXU.TPL;1
DAS20GXB.TPL;1
DAS20GXU.TPL;1
DAS20HXB.TPL;1
DAS20HXU.TPL;1
DAS20IXB.TPL;1
DAS20IXU.TPL;1
DAS20XB.TPL;1
DAS20XU.TPL;1
DAS20XYA.TPL;1
DAS20XYB.TPL;1
DAS20XYC.TPL;1
DAS20XYD.TPL;1
DAS20XYE.TPL;1

```
DAS20XYF.TPL;1
DAS20XYG.TPL;1
DAS8AOXA.TPL;1
DAS8AOXB.TPL;1
DAS8AOXC.TPL;1
DAS8AOXD.TPL;1
DAS8AOXE.TPL;1
DAS8AOXF.TPL;1
DAS8PG.TPL;1
DAS8PGXA.TPL;1
DAS8PGXB.TPL;1
DAS8PGXC.TPL;1
DAS8PGXD.TPL;1
DAS8PGXE.TPL;1
DAS8PGXF.TPL;1
DAS8PGXG.TPL;1
DAS8PGXH.TPL;1
DAS8PGYA.TPL;1
DAS8PGYB.TPL;1
DAS8PGYC.TPL;1
DAS8PGYD.TPL;1
DAS8PGYE.TPL;1
DAS8PGYF.TPL;1
DAS8PGYG.TPL;1
DAS8PGYH.TPL;1
DAS8PGYI.TPL;1
DAS8PU.TPL;1
DAS8PUXA.TPL;1
DAS8PUXB.TPL;1
DAS8PUXC.TPL;1
DAS8PUXD.TPL;1
DAS8PUXE.TPL;1
DAS8PUXF.TPL;1
DAS8PUXG.TPL;1
DAS8PUXH.TPL;1
DAS8XY.TPL;1
DASH16A.TPL;1
DASH16B.TPL;1
DASH16C.TPL;1
DASH16D.TPL;1
DASH16E.TPL;1
DASH16F.TPL;1
DASH16G.TPL;1
DASH16H.TPL;1
DASH16I.TPL;1
DASH4.TPL;1
DASH8.TPL;1
DASH8XXA.TPL;1
DASH8XXB.TPL;1
DASH8XXC.TPL;1
DASH8XXD.TPL;1
DASH8XXE.TPL;1
DASH8XXF.TPL;1
DASH8XXG.TPL;1
DASH8XXH.TPL;1                                  Total of 220 files.
```

APPENDIX B

Preparations Required for Creation of the PCF-1 ROMDISK

Preparations Required for Setting Up the PCF-1 ROMDISK To Become Bootable from DOS

These instructions are written for a LUMINA PC configuration that includes one Curtis static RAM disk populated with seven 1mb SIMMs, one 1.44Mb capacity disk drive (drive A:) and NO hard drive. DOS version 6.0 was used. The ROM chip on the Curtis ROMdisk must be at least revision 3.0 or later. Creation of a bootable ROMDISK consists of several steps that must be carefully followed.

STEP 1:

Install the ROMDISK (PCF-1) board into the computer as instructed by the installation manual. There are two switches on the back of the ROMDISK board that are accessible even after the cover of the PC has been replaced. Once the board is in the PC, the bottom switch is SWITCH 1 and the top one is SWITCH 2. Both switches should be in the OFF position, which is toward the Power Supply (away from the numbers).

STEP 2:

The 5.25" "ROMDISK ..... UTILITIES" disk provided from Curtis has a file on it that is needed for the ROMDISK installation. As the drive in the PC will only accept a 3.5" diskette, a copy of the file PCFSETUP.EXE has been provided on the 3.5" diskette labelled ONETIME. This same bootable diskette has the necessary files on it to make DOS 6.0 operational on the PC. Boot the PC from the bootable DOS 6 diskette labelled ONETIME.

STEP 3:

From the A:> prompt run PCFSETUP. You will be asked four questions.

Floppy or Hard Drive Emulation (F/H)? [F]

Answer: H

Total number of SRAM SIMMS in Socketts P1 - P7 (1 - 7)? [4]

Answer: 7

Boot Memory Address A=CA00,B=CC00, C=CE00, D=D000? [A]

Answer: A

Base I/O (JPI) Port Address B=2B0, C=2C0, D=2D0, E=2E0 [B]

Answer: B

You will be notified that PCFSETUP ran successfully.

STEP 4:

Turn the PC off. Flip dip switch 1 ON (toward the number 1). Turn the PC back on. You will still need the ONETIME 3.5" diskette to boot DOS but by rebooting with the configuration just mentioned, you will now be able to use standard DOS commands to initialize and format the C: drive (eg: FDISK, FORMAT, etc.).

STEP 5:

Run FDISK from the ONETIME bootable diskette to create a primary partition on the C drive. If you are not familiar with the DOS commands addressed in this document, please refer to the DOS reference manual for an explanation and proper syntax. After FDISK, run FORMAT/S C:. This will make the C: drive bootable. Verify success by removing the disk from the A: drive and rebooting the PC.

STEP 6:

Copy all files from A: to C:. Files exist in both the root and in \DOS on the RUNTIME diskette. Copy all files from A:\ to C:\. Next create a directory called DOS on C: with the MKDIR command. Copy all files from A:\DOS on the RUNTIME diskette to C:\DOS. A full implementation of DOS 6.0 requires 5+ megabytes of diskspace. Only those files necessary for the LUMINA PC have been placed on the enclosed 3.5" diskette. Addition of other DOS files is not necessary and would require valuable disk space currently available for data collection.

STEP 7:

Use DBLSPACE to double the disk capacity of the drive. See the DBLSPACE command in the DOS Reference manual if you are not familiar with this command. This procedure creates a drive called H: for those files that DOS cannot compress. You will want to resize C: because DOS created the H: drive with 2.5 Mb of free diskspace, which is excessive on a drive whose total capacity is only 7Mb. The H: drive can be reduced to its minimum size (.6 megabytes).

STEP 8:

Modify CONFIG.SYS. A copy of this file was created in step 7 when you ran DBLSPACE but is not adequate for the complete configuration.

CONFIG.OK was copied from the RUNTIME diskette in step 6 and can be copied to CONFIG.SYS in C:.
If changes to CONFIG.SYS are needed, you may invoke the editor with the following command:

A:> EDIT CONFIG.SYS

See the DOS 6.0 Reference manual for further use of the DOS editor. Save the file by pressing the ALT key followed by the down-arrow key. This will display a pull-down menu. Press S for save (or use the up/down arrow key to highlight "Save", then press ENTER).

You can now exit the editor by again pressing the ALT key, then selecting X using the up/down arrow keys. Verify the contents of CONFIG.SYS from the DOS prompt with the following command:

A:> TYPE CONFIG.SYS

If it looks ok reboot the system.

STEP 9:

You are now ready to create an AUTOEXEC.BAT file. A functional AUTOEXEC.OK file was copied to C: in step 6. Copy it to AUTOEXEC.BAT in C:\. After verifying the date and time, enter the following:

A:> EDIT AUTOEXEC.BAT

If you are familiar with the functionings of AUTOEXEC.BAT, you may wish to add some additional commands to it. Save the file using ALT and the up/down arrow keys. Exit the editor by pressing the ALT key and selecting X with the up/down arrow keys. Verify the contents of the file and reboot the system once the AUTOEXEC.BAT file is correct.

The ONETIME diskette has the files on it necessary to run MEMMAKER. This is an optional step and can be skipped. MEMMAKER optimizes memory usage and loads files (including parts of the operating system) into high memory. To perform memory optimization copy the following files to C:\DOS from the ONETIME B:\ directory:

CHKSTATE.SYS
EMM386.EXE
HIMEM.SYS
MEMMAKER.EXE
MEMMAKER.HLP
MEMMAKER.INF
MEMMAKER.STS
SIZER.EXE

These files can be deleted after MEMMAKER has successfully completed. To invoke it, enter the following command:

C:\> MEMMAKER

Use the defaults for the questions asked. Consult the MS-DOS 6.0 Reference manual if you are not familiar with MEMMAKER. The enclosed CONFIG.SYS and AUTOEXEC.BAT on both the ONETIME and the RUNTIME diskettes reflect the memory optimization that MEMMAKER generated when the operating system was initially installed.

The complete installation of all files required for the operating system (DOS 6.0) and LT/Control used up 6+ megabytes of space. Because DBLSPACE was used to maximize the size of C: to 12 megabytes, 5+ megabytes of space were made available for data collection.

APPENDIX C

Wiring Diagrams

APPENDIX C-1

Wiring in the 1991 Lumina

Circuit Connections to Lumina's Electronic Control Module

The Keithley Metrabyte DAS-8 A/D converter board in the data acquisition system is connected to the electronic control module (ECM) of the Lumina by means of a multiconductor cable having 18 twisted pairs. The connections were made by removing the ECM (located under the coolant expansion tank in the engine compartment), stripping back the insulation on certain lead-in wires from the Lumina's wiring harness, soldering wires from the multiconductor cable to the appropriate lead-ins, reinsulating all lead-ins, and reistalling the ECM.

The table below describes the color coding for the multiconnector cable and the attachments to the ECM. The ECM has four banks of wires that carry signals from OEM sensors to the ECM and that transmit controls to various devices. Twisted pairs are shown as grouped together in the table. Also shown in the table is the color coding scheme for the OEM lead-in wires, which can be used to identify each of the four banks of wires.

Multiconductor Wire color	Function	ECM Connection	Color of OEM Lead-in Wire
blue	O_2 sensor high	bank 1, pin number 16	PPL
black	O_2 sensor low	bank 1, pin number 22	TAN
yellow	veh spd sens input	bank 3, pin number 8	YEL
black	sensor ground	bank 3, pin number 1	PPL
orange	thrt pos sens input	bank 3, pin number 15	DK BLU
black	sensor ground	bank 3, pin number 2	PPL
green	map input	bank 3, pin number 22	LT GRN
black	sensor ground	bank 3, pin number 5	BLK
red	dist pulse ref hi	bank 4, pin number 13	PPL-WHITE
black	dist pulse ref lo	bank 4, pin number 19	BLK-RED

APPENDIX C-2

D/A System Wiring Diagram

Lumina Wire Harness
ECU to Trunk

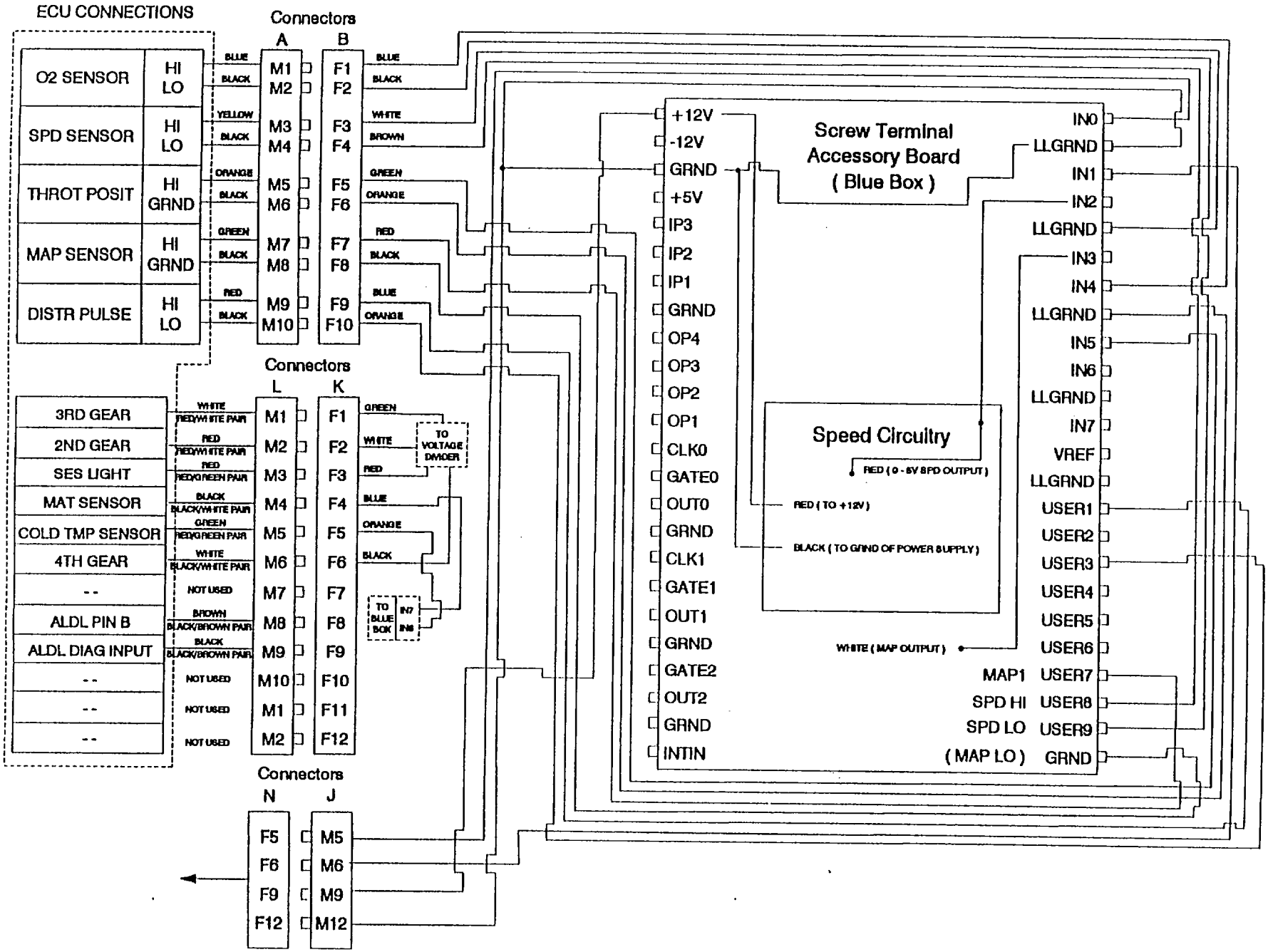

APPENDIX C-3

Trunk to Passenger Compartment Wiring Diagram

Wiring from Passenger Compartment to Trunk Area

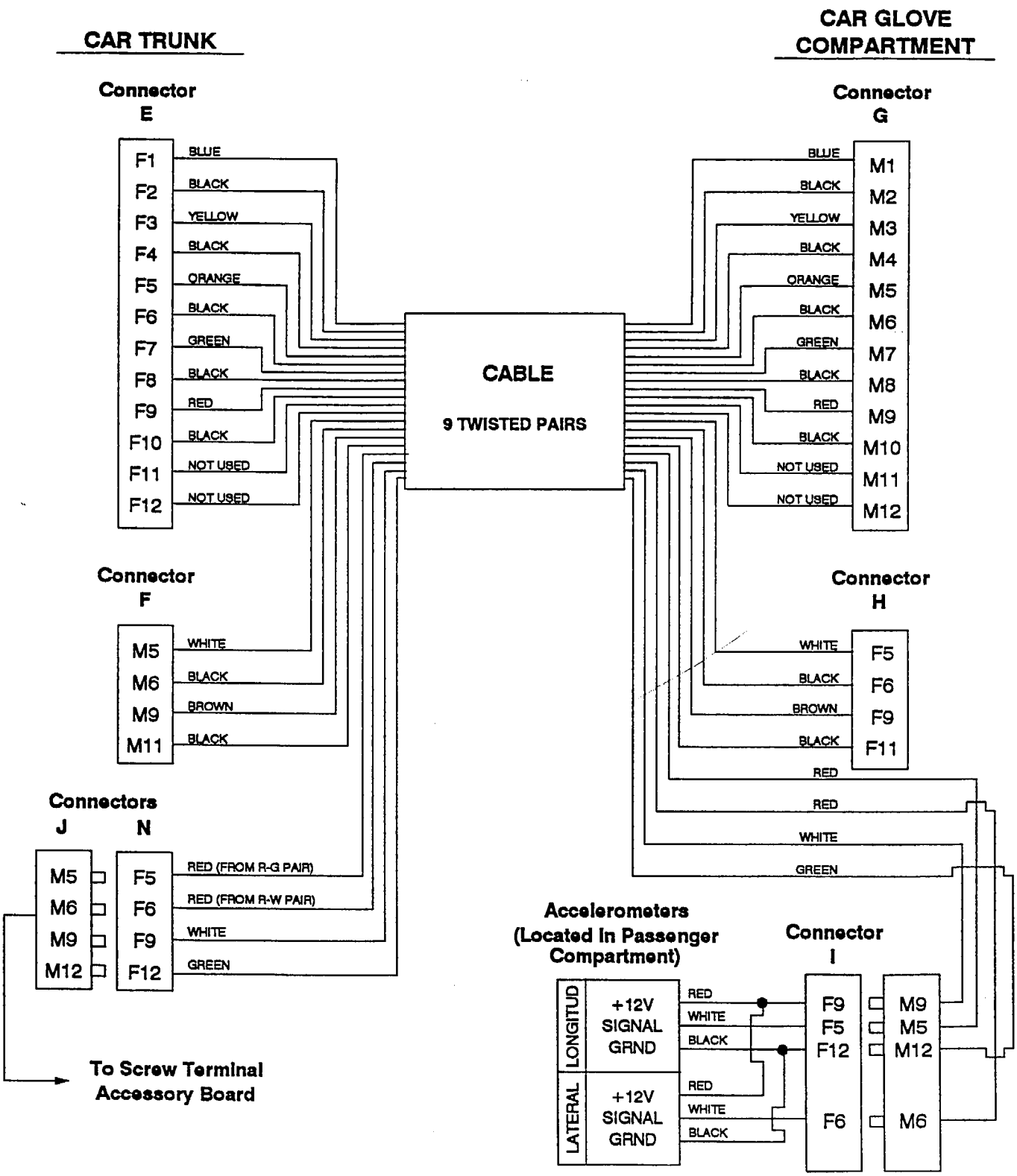

APPENDIX D

Sample Data Set of SES Light Flashes Indicating Fault Codes

File No. 060918.prn - Data collection at 4 Hertz with engine off

SIERRA RESEARCH
LUMSES4: 4 SAMPLES/SEC
The time is 14:45:00.15.
The date is 6-09-1993.

LONG ACC G'S	LAT ACC G'S	SPEED MPH	MAP KPA	O2 SENS AVG VLTS	THROTTL VOLTS	DURATION SECONDS	CUMTIME SECONDS	ENG.SPD. RPM	COOL T VOLTS	MAT VOLTS	SES		
0.0028	-0.0318	0.14	105.72	0.413	0.762	0	53101.66	0	2.827	2.6	0		
0.0086	-0.0305	0.14	105.68	0.413	0.762	0.25	53101.91	0	2.822	2.598	1		
0.0098	-0.031	0.19	105.72	0.409	0.759	0.5	53102.16	0	2.825	2.603	1		
0.0086	-0.0312	0.19	105.87	0.407	0.759	0.75	53102.41	0	2.827	2.598	0		
0.0086	-0.0311	0.14	105.87	0.407	0.767	1	53102.66	0	2.832	2.605	0		
0.0064	-0.0318	0.19	105.63	0.406	0.762	1.25	53102.91	0	2.825	2.593	1		
0.0045	-0.0323	0.14	105.68	0.406	0.759	1.5	53103.16	0	2.822	2.6	1		
0.0033	-0.033	0.19	105.72	0.407	0.762	1.75	53103.41	0	2.825	2.598	1		
0.0023	-0.033	0.1	105.68	0.406	0.762	2	53103.66	0	2.825	2.598	1		
0.0028	-0.033	0.19	105.72	0.406	0.764	2.25	53103.91	0	2.83	2.603	1		
0.0018	-0.0325	0.14	105.58	0.408	0.762	2.5	53104.16	0	2.827	2.598	1		
0.003	-0.0308	0.19	105.68	0.408	0.762	2.75	53104.41	0	2.825	2.593	1		
0.0033	-0.0308	0.14	105.63	0.408	0.759	3	53104.66	0	2.827	2.6	1		
0.0038	-0.0301	0.14	105.92	0.406	0.759	3.25	53104.91	0	2.827	2.6	1		
0.0067	-0.0298	0.19	105.82	0.406	0.767	3.5	53105.16	0	2.827	2.6	1		
0.0074	-0.0306	0.19	105.82	0.407	0.767	3.75	53105.41	0	2.822	2.603	1		
0.0099	-0.0298	0.19	105.63	0.407	0.759	4	53105.66	0	2.825	2.598	1		
0.0106	-0.0306	0.14	105.72	0.405	0.762	4.25	53105.91	0	2.827	2.603	0	----------	1
0.0101	-0.0306	0.19	105.77	0.404	0.767	4.5	53106.16	0	2.83	2.603	0		
0.0106	-0.0306	0.19	105.68	0.402	0.762	4.75	53106.41	0	2.825	2.598	1		
0.0089	-0.0323	0.19	105.77	0.403	0.764	5	53106.66	0	2.827	2.603	1		
0.0084	-0.0325	0.14	105.63	0.405	0.759	5.25	53106.91	0	2.825	2.595	1		
0.0069	-0.034	0.14	105.63	0.405	0.754	5.5	53107.16	0	2.825	2.598	1		
0.0055	-0.0345	0.19	105.68	0.405	0.762	5.75	53107.41	0	2.827	2.6	1		
0.0055	-0.0338	0.14	105.72	0.403	0.759	6	53107.66	0	2.832	2.607	0	----------	
0.004	-0.0335	0.14	105.77	0.407	0.767	6.25	53107.91	0	2.832	2.607	1		
0.0038	-0.0313	0.14	105.72	0.408	0.767	6.5	53108.16	0	2.825	2.6	1		
0.0028	-0.0311	0.14	105.72	0.409	0.764	6.75	53108.41	0	2.832	2.603	0	----------	3
0.0025	-0.0303	0.19	105.72	0.41	0.764	7	53108.66	0	2.83	2.603	0		
0.0035	-0.0298	0.19	105.63	0.406	0.762	7.25	53108.91	0	2.827	2.598	1		
0.0045	-0.0301	0.19	105.82	0.405	0.767	7.5	53109.16	0	2.834	2.612	0	----------	
0.0072	-0.0294	0.19	105.77	0.406	0.767	7.75	53109.41	0	2.834	2.607	0		
0.0086	-0.0301	0.14	105.72	0.407	0.762	8	53109.66	0	2.83	2.6	1		
0.0099	-0.0298	0.19	105.58	0.407	0.764	8.25	53109.91	0	2.83	2.6	1		
0.0116	-0.0301	0.14	105.68	0.407	0.762	8.5	53110.16	0	2.825	2.6	1		
0.0111	-0.032	0.19	105.68	0.406	0.762	8.75	53110.41	0	2.827	2.6	1		
0.0106	-0.0313	0.19	105.77	0.406	0.764	9	53110.66	0	2.83	2.6	1		
0.0099	-0.032	0.14	105.68	0.407	0.762	9.25	53110.91	0	2.827	2.6	1		
0.0082	-0.0328	0.19	105.58	0.408	0.781	9.5	53111.16	0	2.83	2.598	1		
0.0062	-0.0316	0.14	105.63	0.408	0.762	9.75	53111.41	0	2.825	2.6	1		
0.004	-0.033	0.19	105.58	0.407	0.747	10	53111.66	0	2.83	2.603	1		
0.003	-0.032	0.19	105.68	0.408	0.767	10.25	53111.91	0	2.834	2.607	1		
0.0016	-0.0318	0.19	105.63	0.408	0.764	10.5	53112.16	0	2.83	2.61	1		

0.0018	-0.0313	0.14	105.58	0.407	0.757	10.75	53112.41	0	2.83	2.6	1		
0.0028	-0.0303	0.14	105.63	0.407	0.762	11	53112.66	0	2.832	2.598	1		
0.0028	-0.0308	0.19	105.77	0.406	0.762	11.25	53112.91	0	2.834	2.607	0	----------	1
0.0045	-0.0296	0.19	105.82	0.405	0.762	11.5	53113.16	0	2.839	2.598	0		
0.0062	-0.0294	0.14	105.82	0.407	0.767	11.75	53113.41	0	2.834	2.607	1		
0.0072	-0.0294	0.14	105.68	0.406	0.759	12	53113.66	0	2.834	2.6	1		
0.0089	-0.0291	0.14	105.63	0.406	0.764	12.25	53113.91	0	2.832	2.6	1		
0.0089	-0.0308	0.19	105.63	0.406	0.762	12.5	53114.16	0	2.83	2.605	1		
0.0091	-0.0313	0.19	105.72	0.4	0.767	12.75	53114.41	0	2.837	2.607	0	----------	
0.0101	-0.0323	0.14	105.82	0.401	0.767	13	53114.66	0	2.839	2.612	0		
0.0099	-0.0333	0.14	105.72	0.401	0.762	13.25	53114.91	0	2.832	2.6	1		2
0.0099	-0.0338	0.19	105.68	0.401	0.762	13.5	53115.16	0	2.83	2.605	1		
0.0082	-0.035	0.14	105.72	0.405	0.757	13.75	53115.41	0	2.837	2.607	0	----------	
0.0072	-0.0342	0.14	105.68	0.405	0.762	14	53115.66	0	2.832	2.607	1		
0.0067	-0.0342	0.14	105.72	0.406	0.764	14.25	53115.91	0	2.834	2.61	1		
0.0057	-0.0333	0.14	105.58	0.408	0.767	14.5	53116.16	0	2.834	2.607	1		
0.0057	-0.0325	0.19	105.68	0.408	0.762	14.75	53116.41	0	2.832	2.603	1		
0.004	-0.0333	0.19	105.63	0.407	0.762	15	53116.66	0	2.837	2.605	1		
0.0028	-0.0323	0.19	105.68	0.406	0.757	15.25	53116.91	0	2.834	2.605	1		
0.0025	-0.0328	0.19	105.72	0.405	0.762	15.5	53117.16	0	2.834	2.603	1		
0.002	-0.0323	0.19	105.77	0.407	0.764	15.75	53117.41	0	2.839	2.61	1		
0.0038	-0.0306	0.14	105.58	0.407	0.759	16	53117.66	0	2.837	2.605	1		
0.0045	-0.0311	0.14	105.63	0.407	0.759	16.25	53117.91	0	2.834	2.605	1		
0.0062	-0.0291	0.14	105.68	0.408	0.759	16.5	53118.16	0	2.837	2.605	1		
0.0082	-0.0296	0.14	105.58	0.406	0.759	16.75	53118.41	0	2.837	2.605	1		
0.0089	-0.0301	0.14	105.72	0.407	0.767	17	53118.66	0	2.839	2.607	1		
0.0103	-0.0296	0.19	105.63	0.408	0.762	17.25	53118.91	0	2.837	2.607	0	----------	1
0.0106	-0.0316	0.19	105.68	0.407	0.767	17.5	53119.16	0	2.839	2.605	0		
0.0108	-0.0306	0.14	105.63	0.407	0.762	17.75	53119.41	0	2.839	2.605	1		
0.0108	-0.0313	0.19	105.68	0.406	0.762	18	53119.66	0	2.837	2.607	1		
0.0106	-0.0311	0.14	105.82	0.407	0.764	18.25	53119.91	0	2.842	2.612	1		
0.0113	-0.0301	0.14	105.63	0.409	0.764	18.5	53120.16	0	2.839	2.61	1		
0.0101	-0.0318	0.19	105.82	0.402	0.764	18.75	53120.41	0	2.842	2.61	0	----------	
0.0079	-0.0318	0.14	105.63	0.402	0.764	19	53120.66	0	2.839	2.607	0		
0.0057	-0.033	0.19	105.58	0.4	0.759	19.25	53120.91	0	2.837	2.607	1		2
0.0023	-0.0338	0.19	105.63	0.399	0.757	19.5	53121.16	0	2.834	2.605	1		
0.0018	-0.0325	0.19	105.82	0.406	0.769	19.75	53121.41	0	2.844	2.615	0	----------	
0.002	-0.0323	0.14	105.68	0.406	0.762	20	53121.66	0	2.837	2.605	1		
0.002	-0.0318	0.14	105.53	0.406	0.762	20.25	53121.91	0	2.839	2.607	1		
0.0028	-0.0311	0.19	105.68	0.407	0.762	20.5	53122.16	0	2.839	2.61	1		
0.0028	-0.0318	0.14	105.63	0.406	0.762	20.75	53122.41	0	2.839	2.61	1		
0.003	-0.0313	0.19	105.68	0.407	0.781	21	53122.66	0	2.847	2.612	1		
0.004	-0.0316	0.14	105.63	0.407	0.764	21.25	53122.91	0	2.839	2.612	1		
0.0042	-0.0325	0.14	105.68	0.407	0.762	21.5	53123.16	0	2.839	2.607	1		
0.0057	-0.0308	0.19	105.33	0.407	0.759	21.75	53123.41	0	2.842	2.607	1		
0.0067	-0.0316	0.19	105.68	0.406	0.759	22	53123.66	0	2.837	2.615	1		
0.0072	-0.0318	0.14	105.68	0.406	0.762	22.25	53123.91	0	2.844	2.61	1		
0.0082	-0.0311	0.19	105.82	0.407	0.764	22.5	53124.16	0	2.844	2.615	1		
0.0077	-0.0328	0.19	105.63	0.407	0.762	22.75	53124.41	0	2.842	2.612	1		
0.0089	-0.0325	0.19	105.63	0.406	0.737	23	53124.66	0	2.842	2.607	1		
0.0096	-0.0323	0.19	105.72	0.406	0.764	23.25	53124.91	0	2.847	2.61	0	----------	1

0.0099	-0.0325	0.19	105.58	0.405	0.762	23.5	53125.16	0	2.847	2.615	0		
0.0103	-0.0325	0.19	105.72	0.406	0.767	23.75	53125.41	0	2.844	2.615	1		
0.0089	-0.0333	0.14	105.68	0.407	0.762	24	53125.66	0	2.842	2.61	1		
0.0079	-0.0335	0.19	105.63	0.407	0.759	24.25	53125.91	0	2.842	2.61	1		
0.0069	-0.0345	0.19	105.58	0.407	0.762	24.5	53126.16	0	2.844	2.607	1		
0.0047	-0.0347	0.14	105.68	0.406	0.762	24.75	53126.41	0	2.849	2.615	0	----------	
0.004	-0.034	0.19	105.77	0.407	0.769	25	53126.66	0	2.844	2.615	0		
0.0033	-0.0342	0.14	105.68	0.408	0.764	25.25	53126.91	0	2.847	2.62	1		2
0.002	-0.0333	0.19	105.58	0.408	0.762	25.5	53127.16	0	2.837	2.607	1		
0.0028	-0.032	0.14	105.68	0.407	0.764	25.75	53127.41	0	2.844	2.593	0	----------	
0.0018	-0.0316	0.14	105.68	0.406	0.762	26	53127.66	0	2.847	2.61	1		
0.0016	-0.0306	0.19	105.72	0.405	0.759	26.25	53127.91	0	2.844	2.61	1		
0.0025	-0.0296	0.19	105.72	0.406	0.764	26.5	53128.16	0	2.849	2.615	1		
0.0028	-0.0301	0.14	105.58	0.406	0.757	26.75	53128.41	0	2.842	2.612	1		
0.004	-0.0298	0.19	105.63	0.406	0.757	27	53128.66	0	2.844	2.612	1		
0.0055	-0.0294	0.14	105.58	0.406	0.757	27.25	53128.91	0	2.844	2.61	1		
0.0069	-0.0298	0.19	105.58	0.405	0.759	27.5	53129.16	0	2.847	2.612	1		
0.0084	-0.0294	0.19	105.77	0.406	0.762	27.75	53129.41	0	2.849	2.615	1		
0.0103	-0.0303	0.14	105.68	0.407	0.764	28	53129.66	0	2.844	2.61	1		
0.0108	-0.0318	0.19	105.63	0.407	0.762	28.25	53129.91	0	2.844	2.607	1		
0.0111	-0.032	0.19	105.68	0.406	0.762	28.5	53130.16	0	2.844	2.61	1		
0.0113	-0.0325	0.14	105.63	0.405	0.762	28.75	53130.41	0	2.844	2.607	1		
0.0103	-0.033	0.14	105.72	0.405	0.762	29	53130.66	0	2.849	2.615	1		
0.0099	-0.032	0.19	105.82	0.406	0.767	29.25	53130.91	0	2.852	2.622	0	----------	1
0.0086	-0.0323	0.19	105.68	0.405	0.754	29.5	53131.16	0	2.847	2.615	0		
0.0069	-0.0328	0.1	105.63	0.406	0.762	29.75	53131.41	0	2.844	2.61	1		
0.006	-0.032	0.19	105.68	0.406	0.762	30	53131.66	0	2.847	2.612	1		
0.0042	-0.0325	0.19	105.58	0.405	0.757	30.25	53131.91	0	2.842	2.61	1		
0.0035	-0.0323	0.19	105.72	0.406	0.764	30.5	53132.16	0	2.849	2.615	1		
0.003	-0.032	0.14	105.58	0.406	0.762	30.75	53132.41	0	2.849	2.615	0	----------	
0.002	-0.0323	0.14	105.77	0.406	0.762	31	53132.66	0	2.847	2.615	0		
0.0025	-0.0316	0.14	105.72	0.406	0.759	31.25	53132.91	0	2.844	2.612	1		
0.0023	-0.0313	0.14	105.68	0.405	0.762	31.5	53133.16	0	2.847	2.607	1		
0.0025	-0.0316	0.14	105.72	0.405	0.764	31.75	53133.41	0	2.854	2.62	0	----------	3
0.0045	-0.0306	0.14	105.58	0.408	0.762	32	53133.66	0	2.854	2.615	1		
0.0055	-0.0308	0.14	105.53	0.409	0.759	32.25	53133.91	0	2.847	2.607	1		
0.0074	-0.0313	0.19	105.63	0.404	0.762	32.5	53134.16	0	2.852	2.617	0	----------	
0.0094	-0.0308	0.14	105.63	0.403	0.759	32.75	53134.41	0	2.847	2.615	1		
0.0096	-0.0318	0.19	105.77	0.4	0.757	33	53134.66	0	2.849	2.612	1		
0.0099	-0.0325	0.19	105.72	0.402	0.764	33.25	53134.91	0	2.849	2.62	1		
0.0101	-0.0318	0.19	105.63	0.406	0.762	33.5	53135.16	0	2.849	2.615	1		
0.0099	-0.0323	0.14	105.63	0.406	0.759	33.75	53135.41	0	2.844	2.61	1		
0.0089	-0.0325	0.14	105.63	0.407	0.762	34	53135.66	0	2.847	2.612	1		
0.0086	-0.032	0.14	105.68	0.406	0.759	34.25	53135.91	0	2.847	2.615	1		
0.0074	-0.033	0.19	105.63	0.407	0.764	34.5	53136.16	0	2.854	2.617	1		
0.0055	-0.033	0.14	105.68	0.408	0.767	34.75	53136.41	0	2.847	2.62	1		
0.0052	-0.0328	0.19	105.58	0.408	0.762	35	53136.66	0	2.852	2.615	1		
0.004	-0.0338	0.14	105.63	0.408	0.762	35.25	53136.91	0	2.844	2.612	1		
0.003	-0.0338	0.14	105.63	0.407	0.759	35.5	53137.16	0	2.849	2.615	1		
0.0035	-0.033	0.19	105.72	0.406	0.762	35.75	53137.41	0	2.852	2.615	1		
0.003	-0.0325	0.14	105.77	0.406	0.769	36	53137.66	0	2.854	2.622	0	----------	1

0.0028	-0.0318	0.14	105.68	0.405	0.759	36.25	53137.91	0	2.852	2.617	0		
0.0035	-0.0316	0.14	105.63	0.41	0.762	36.5	53138.16	0	2.852	2.612	1		
0.0033	-0.0318	0.19	105.63	0.41	0.759	36.75	53138.41	0	2.852	2.617	1		
0.0045	-0.0313	0.14	105.58	0.41	0.762	37	53138.66	0	2.849	2.615	1		
0.0064	-0.0311	0.19	105.68	0.411	0.764	37.25	53138.91	0	2.854	2.622	1		
0.0072	-0.0308	0.19	105.58	0.407	0.759	37.5	53139.16	0	2.849	2.615	1		
0.0091	-0.0303	0.19	105.68	0.407	0.762	37.75	53139.41	0	2.854	2.62	0	----------	
0.0101	-0.0308	0.19	105.63	0.409	0.757	38	53139.66	0	2.849	2.615	1		
0.0103	-0.0313	0.14	105.63	0.408	0.759	38.25	53139.91	0	2.854	2.62	1		
0.0106	-0.0313	0.14	105.77	0.403	0.769	38.5	53140.16	0	2.859	2.627	0	----------	3
0.0101	-0.0318	0.14	105.63	0.404	0.767	38.75	53140.41	0	2.861	2.627	0		
0.0091	-0.0323	0.19	105.68	0.402	0.759	39	53140.66	0	2.852	2.617	1		
0.0086	-0.0316	0.14	105.68	0.402	0.762	39.25	53140.91	0	2.856	2.617	0	----------	
0.0077	-0.0328	0.19	105.63	0.406	0.762	39.5	53141.16	0	2.854	2.62	0		
0.0067	-0.0328	0.19	105.68	0.406	0.759	39.75	53141.41	0	2.849	2.617	1		
0.006	-0.0325	0.19	105.68	0.407	0.764	40	53141.66	0	2.856	2.622	1		
0.0045	-0.0338	0.19	105.58	0.407	0.759	40.25	53141.91	0	2.854	2.617	1		
0.0042	-0.033	0.14	105.58	0.408	0.759	40.5	53142.16	0	2.854	2.62	1		
0.0035	-0.0333	0.14	105.58	0.408	0.757	40.75	53142.41	0	2.852	2.617	1		
0.0028	-0.034	0.19	105.63	0.407	0.762	41	53142.66	0	2.854	2.61	1		
0.0033	-0.0325	0.19	105.72	0.408	0.764	41.25	53142.91	0	2.854	2.62	1		
0.0028	-0.0323	0.19	105.63	0.409	0.764	41.5	53143.16	0	2.849	2.62	1		
0.0028	-0.0323	0.19	105.63	0.408	0.762	41.75	53143.41	0	2.852	2.615	1		
0.0038	-0.0308	0.19	105.63	0.409	0.759	42	53143.66	0	2.854	2.62	1		
0.0042	-0.0311	0.14	105.63	0.407	0.757	42.25	53143.91	0	2.854	2.615	1		
0.006	-0.0311	0.14	105.68	0.406	0.752	42.5	53144.16	0	2.861	2.615	1		
0.0074	-0.0306	0.19	105.72	0.408	0.764	42.75	53144.41	0	2.859	2.622	1		
0.0084	-0.0316	0.14	105.63	0.407	0.762	43	53144.66	0	2.861	2.622	0	----------	1
0.0091	-0.032	0.14	105.63	0.406	0.757	43.25	53144.91	0	2.859	2.62	1		
0.0094	-0.0318	0.14	105.68	0.407	0.759	43.5	53145.16	0	2.856	2.62	1		
0.0103	-0.0318	0.14	105.63	0.406	0.762	43.75	53145.41	0	2.856	2.622	1		
0.0106	-0.032	0.19	105.72	0.407	0.767	44	53145.66	0	2.859	2.625	1		
0.0099	-0.0325	0.14	105.63	0.408	0.762	44.25	53145.91	0	2.856	2.62	1		
0.0086	-0.033	0.19	105.68	0.408	0.762	44.5	53146.16	0	2.859	2.622	0	----------	?
0.0064	-0.0342	0.19	105.68	0.407	0.759	44.75	53146.41	0	2.859	2.625	0		
0.0047	-0.0342	0.14	105.58	0.406	0.759	45	53146.66	0	2.856	2.62	1		
0.0038	-0.033	0.19	105.72	0.405	0.764	45.25	53146.91	0	2.866	2.625	0	----------	
0.0028	-0.034	0.05	104.85	0.409	0.718	45.5	53147.16	0	2.815	2.576	0		
0.0025	-0.0342	0.1	104.65	0.415	0.713	45.75	53147.41	0	2.813	2.576	0		

APPENDIX E

Accelerometer Specification Sheet

Solid State Accelerometer Signal Conditioned Output

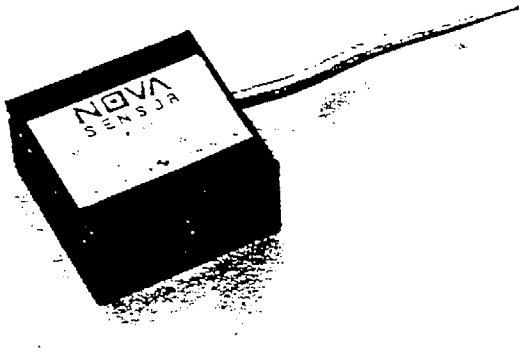

Features

- Range ±2 g
- Solid state, high reliability
- Advanced silicon micromachined cantilever beam design
- High sensitivity, 1.25 volts/g, with linear 5 V_{DC} FSO
- Integral micromachined stops yield superior shock resistance to 1500 g
- On-chip integrated air damping for DC response and wide bandwidth
- Temperature compensation, 0 to +70°C
- Smallest die size (3.4 × 3.4 × 1.5 mm) in volume production. Complete package, with signal conditioning is 1″ square × 0.5″ high
- Resonant frequency greater than 500 Hz
- Cross Axis sensitivity is <3%
- Low price

Applications

- Automotive: smart suspension, airbag & crash sensors, ABS brakes
- Vibration monitoring & analysis
- Computer peripherals
- Consumer appliances & audio speakers
- Aircraft flight controls
- Military arming & fuzing

Description

The Nova AS series high output accelerometer contains a unique silicon cantilever sensor chip with integral air damping, over-range protection to 1500 G in all axes, and low cross-axis sensitivity.

The 3.4 mm square by 1.5 mm thick silicon chip is placed in a 1″ × 1″ × 0.5″ module containing an input voltage regulator, temperature compensation, and signal amplification. This small, low-cost module provides new applications opportunities in a wide range of motion sensing applications. Four mounting holes are provided as standard for mounting.

This product is initially provided for ±2 G inputs. Additional acceleration ranges will be available. Smaller packaging configurations for the accelerometer die are available upon request.

[illegible]

Parameter	Value	Units	Notes
GENERAL			
Input Range*	±2	g	
Output	0.1–5.0	V_{DC}	grounded load
Acceleration Limits	1500	g	any direction
ELECTRICAL (@ 12 V_{DC}, 25°C unless stated otherwise)			
Excitation	8–16	V_{DC}	
Supply Current	5	mA	maximum
Output Impedance	50	Ω	maximum
Insulation Resistance	100	MΩ	@ 50 V_{DC}

Parameter	Value	Units	Notes
ENVIRONMENTAL			
Temperature Range			
Operating	–40° to +100°	°C	–40° to +212°F
Compensated	0° to +70°	°C	+32° to +158°F
MECHANICAL			
Weight	10	grams	without cable
Case Material	Valox thermoplastic polyester		

Other ranges are available for OEM applications; please consult factory.

PERFORMANCE

Parameter	Units	Typ.	Min/Max	Notes
Zero Acceleration Output	V_{DC}	2.5	2.50 ±.10	4
Sensitivity	V/g	1.25	1.25 ±.03	5, 7
Nonlinearity	%FSO	0.5	±1.0	8
Frequency Response	Hz	0–200		6
Mounted Resonant Frequency	Hz	550		
Damping Ratio		0.7		
Cross Axis Sensitivity	%FSO	1.0	±3.0	
Thermal Accuracy – Offset	%FSO		±2.0	3
Thermal Accuracy – FSO	%FSO		±2.0	3
Thermal Hysteresis	%FSO	0.1	±0.5	
Short Term Stability – Offset	mV	2.0	±5.0	

Notes:
1. Positive acceleration gives positive voltage; negative voltage for negative acceleration.
2. All values measured in reference to 12 V_{DC}, 25°C (77°F).
3. 0 to 70°C in reference to 25°C.
4. Reverse polarity protected.
5. Gravimetric calibration
6. ±5% max, ref 100 Hz
7. There is no output change below –2 g. See output vs. acceleration performance characteristics.
8. Best fit straight line

[illegible]

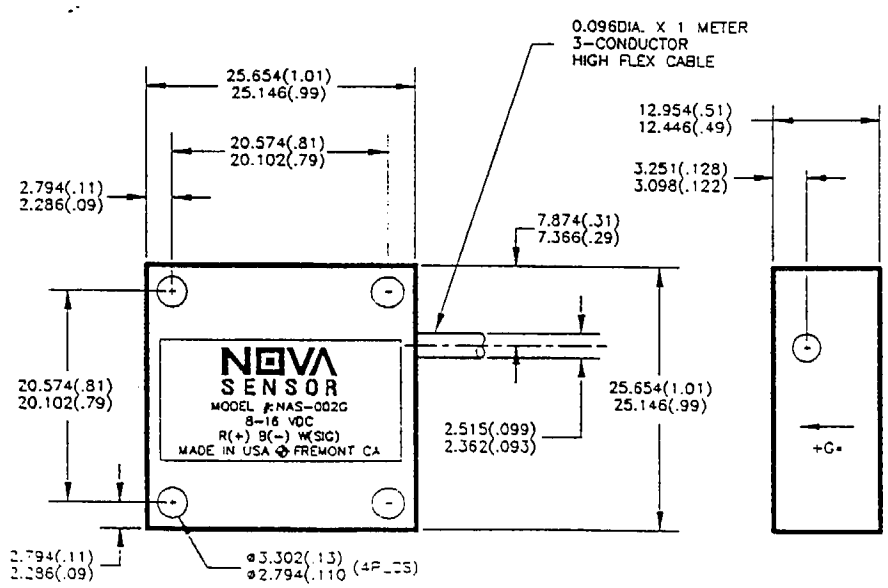

* Acceleration in this direction produces positive output.

All dimensions in mm(inches).

FREQUENCY RESPONSE

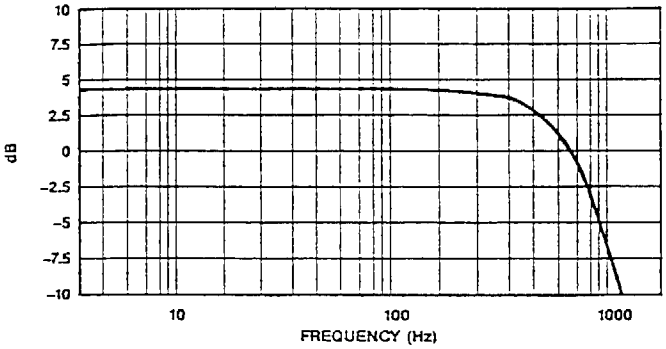

PHASE RESPONSE

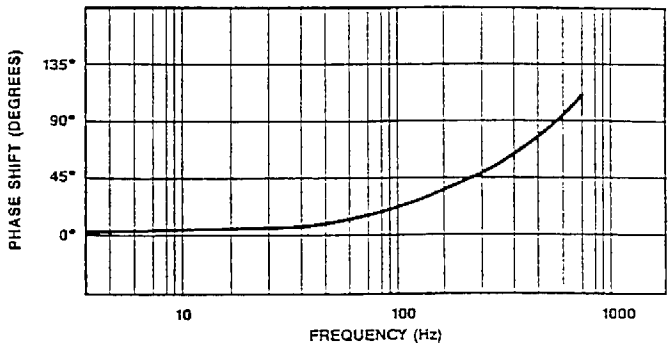

OUTPUT VS. ACCELERATION

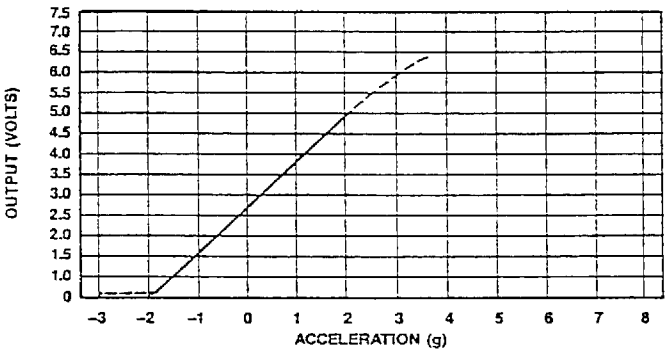

THERMAL HYSTERESIS OF ZERO
(THROUGH 6 CYCLES)

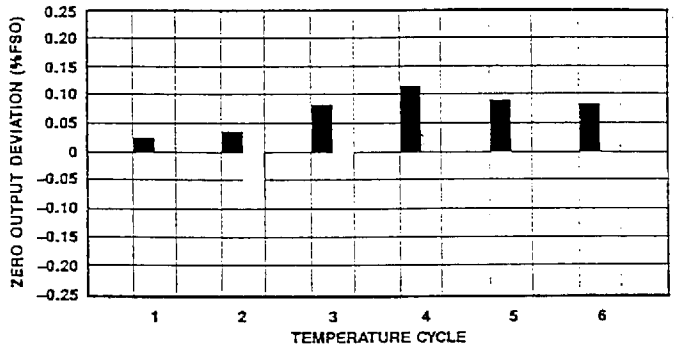

NOTE: Data taken at 25°C
TEMPERATURE CYCLE: 25°C, 85°C, 25°C, -20°C, 25°C

■ Room Temp. Hyst. after 85°C soak. ⋮ Room Temp. Hyst. after full cycle.

NONLINEARITY

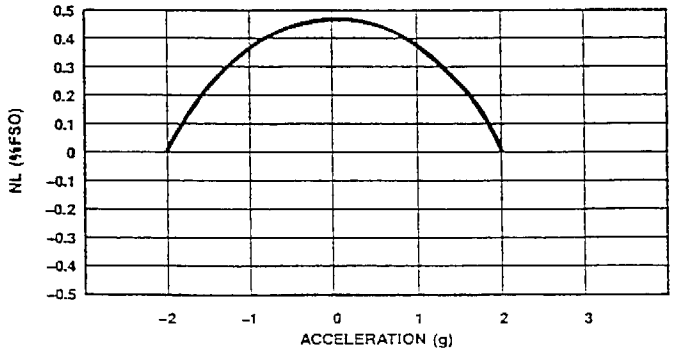

SHORT-TERM STABILITY — OFFSET

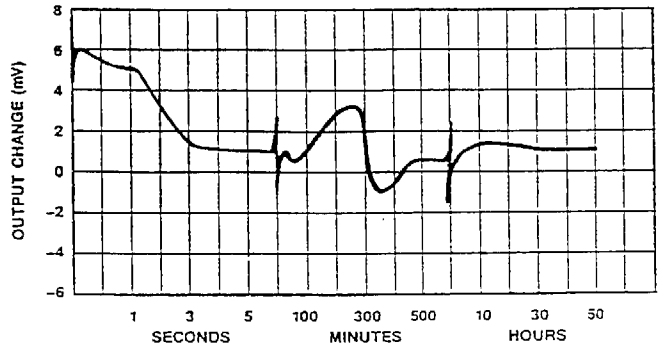

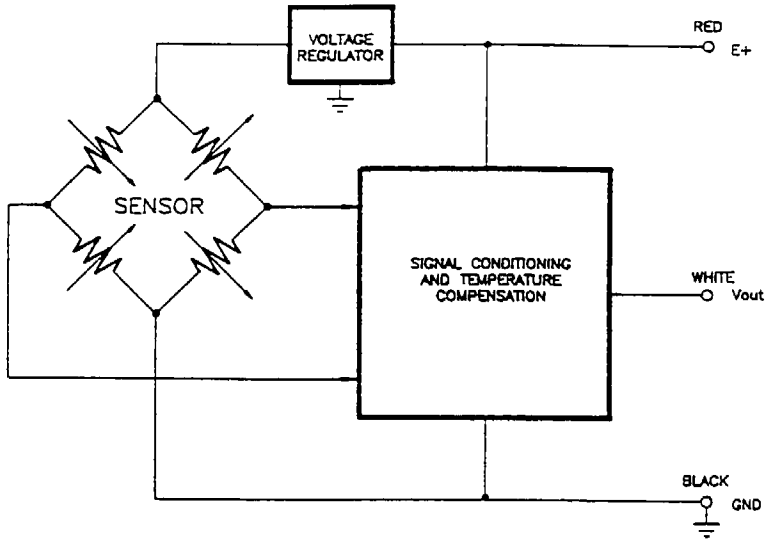

N A S - 002 - C

NovaSensor
Acceleration
Type = Signal Conditioned

Acceleration Range (±) in g

Electrical Connection
C = 3 Conductor
Flexible Cable (Std)

Ordering Example:

Sales Terms: NovaSensor standard sales terms apply. Prices and specifications are subject to change without notice.

Warranty: NovaSensor warrants its products against defects in material and workmanship for 12 months from date of shipment. Products not subjected to misuse will be repaired or replaced. THE FOREGOING IS IN LIEU OF ANY OTHER EXPRESSED OR IMPLIED WARRANTIES. NovaSensor reserves the right to make changes to any product herein and assumes no liability arising out of the application or use of any product or circuit described or referenced herein.

NOVA SENSOR

APPENDIX F

Memorandum from Nick Zayan

ınator: Nick Zayan
.e: 31 JAN 91
ɔpic: in-house document

PGA 9000 Software Modifications for HOST Communications

V3.10E modifications for engineering testing
31 JAN 91

MPSI HOST communication protocal:

1) command 'A' - HOST turns Remote Terminal data output mode to OFF.

2) command 'B' - Host requests the present Gas values.

Data format:

command 'A' (ASCII "A") - no response sent.

command 'B' (ASCII "B") - <STX>a,b,c,d,e,f,g<ETX><cks>

character definitions:

",," = data separator

<STX> = ASCII 02h 'start Tx' used as a 'start of text' marker

a = HC reading, as nnnn (ppm)

b = CO reading, as n.nn (%)

c = CO2 reading, as nn.n (%)

d = O2 reading, as nn.n (%)

e = RPM reading as nnnn (rpm)

f = AFR reading as nn.nn

<ETX> = ASCII 03h 'end Tx' used as an 'end of text' marker

<cks> = value that forces the packet summation (8 bit) to zero

note: leading zero's omitted (ex. '00.2' sent as '0.2')

Response time:

Command response occurs synchronous with gas data acquisition from the PR3 (gas sampling unit). This data rate is one update every 0.5 seconds. When a HOST command is received, a response may be delayed up to 0.5 seconds.

Command 'C' (ASCII "C") - data and display request

RESPONSE - The response to command 'C' will include any ALL of the following FIELDS enclosed by <STX>.....<ETX><CKS>.
The data stream can include any or all of the following. At least one of the following FIELDS must be included.

aL n L = Label for data (ex. CO2, CO etc)
  n = data value in ascii
    the format of n depends on the label
    L = HC format = nnnn (ppm)
    L = CO format = n.nn (%)
    L = CO2 format = nn.n (%)
    L = O2 format = nn.n (%)
    L = RPM format = nnnn (rpm)
    L = AFR format = nn.nn

bT T = Screen title usually display in the middle of the screen. This title may have spaces.

cM M = Menu item label of menu item in first column. These must be sent in sequential order.

dN N = menu item label of menu item in second column These must be sent in sequential order.

eP P = Menu item number pointed to by the arrow.
  format = nn (leading zeros omitted)
  Menu items are numbered as follows:

0	4
1	5
2	6
3	7

fC C = Comment label
  There may be any number of these.

gB B = Button labels. There must be 5 of these. These must be sent in order. If a button is not assigned a function then the label will be white space (a blank).

hS S = STATUS (DIRECT OPER EFFECT)
  SINGLE ASCII CHAR.

command 'D' (ASCII "D") - put analyzer in STANDBY MODE.
- no response sent from unit.
- ANY F KEY FOR OP RETURN

• Default to standby mode

• Change logo (TAGISIZED HELVETICA) DIGITIZED FORMAT

{F1, F2, F3, F4, F5} CHANGE TO ASCII 1, 2, 3, 4, 5.

* CAN STANDBY BE STORED FOR EXE AFTER WARM-UP/ DRIFT IS ACHIEVED ?

APPENDIX G

Wiring Connections ("Pinout") for MPSI/Computer Serial Port Data Link

DATA LOGGER PORT	MPSI SERIAL (PRINTER) PORT
DB9 FEMALE CONNECTOR (LABELLED "PC")	DB9 FEMALE CONNECTOR (LABELLED "MPSI")

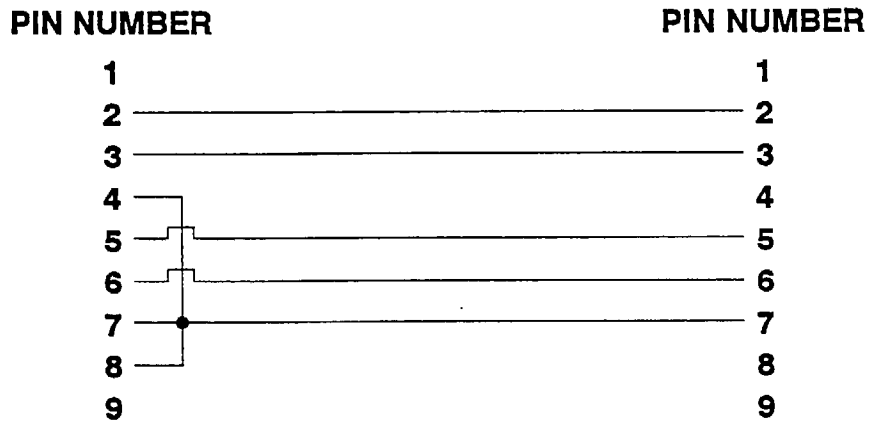

APPENDIX H

Discussion of Volumetric Efficiency

APPENDIX I

Sample Data Set of Second-by-Second Engine Parameters, Exhaust Concentrations, and Exhaust Emissions and FORTAN Program "LUMNA-EM"

Volumetric Efficiency

The air intake system restricts the amount of air that an engine of a given displacement can induct. The effectiveness of the induction process (for four-stroke engines) is referred to as the volumetric efficiency, which is defined[1*] as "the volume flow rate of air into the intake system divided by the rate at which volume is displaced by the piston." According to Heywood[1], "typical maximum values of (volumetric efficiency) for naturally aspirated engines are in the range of 80 to 90 percent" (emphasis added).

The Lumina, like many late-model GM cars, relies upon the measurement of air pressure and temperature, along with engine RPM, to provide a measure of air in-flow to the engine. A theoretical calculation made of the air flow into the engine using only these parameters could, due to the air restrictions mentioned earlier, result in an overestimate of air flow into the engine. The vehicle's ECM is not subject to this problem because it can be programmed using calibrated data from previously conducted experiments to scale the flows. Absent such calibration, a volumetric efficiency of 0.75 has been assumed based on the following considerations.

In a four-stroke cycle engine, the intake valves are usually opened before the piston reaches top dead center (TDC) and kept open until after the piston passes bottom dead center (BDC) in order to help overcome the flow resistance due to elements of the air intake system. For a typical automotive spark ignition engine, the respective timing for these two events are 20° (of crank angle) before TDC and 60° after BDC[2]. Assuming that the momentum of the intake charge is sufficient to overcome pressure in the cylinder, thus allowing a net air flow into the cylinder during the entire period when the intake valve is open, the maximum theoretical air intake is proportional to the swept volume corresponding to the crank angles when the intake valve is open. The fractional swept volume represented during this period is:

$$\text{maximum fractional swept volume} = \frac{1 + [1-\cos(60°)] + [1-\cos(20°)]}{2}$$

$$= 0.78$$

This maximum fractional swept volume is rounded down to 0.75 to represent a more reasonable estimate for the volumetric efficiency of a real engine.

---

* Superscripts denote references provided at the end of the text.

There are at least two other factors that enter into the calculation of mass air flows: charge cooling due to evaporation of fuel, and volume of vaporized fuel. Neither of these effects, which are partly compensating, has been accounted for in the current analysis.

According to Heywood[1], complete evaporation of iso-octane with phi=1.0 (air-fuel ratio = 1.0) gives a drop of 18° C. Heywood goes on to say that the decrease in air temperature that accompanies fuel evaporation more than offsets the reduction in air partial pressure due to the increased amount of fuel vapor.

References

1. Internal Combustion Engine Fundamentals, John B. Heywood, McGraw-Hill, 1988.

2. Emissions from Combustion Engines and Their Control, D.J. Patterson and N.A. Henein, Ann Arbor Science Publishers, 1974.

FILE 07206.PRN

SIERRA RESEARCH
ALLGAS
The time is 10:21:35.39.
The date is 7-20-1993.

LONG G'S	LAT G'S	SPD,MPH	MAP,KPA	O2 AVG V	THROT,V	DURATION SECS	CUMTIME SECS	ENG.SPD. RPM	COOL T,V	MAT,V
0.0386	-0.0298	-0.1	49.4	0.7104	0.7153	0	37427.2	0	2.729	1.75
0.0388	-0.0289	-0.05	50.65	0.6028	0.6982	1	37428.2	940	2.712	1.736
0.0435	-0.0277	-0.05	50.69	0.5193	0.7007	2	37429.2	940	2.732	1.76
0.0425	-0.0295	-0.05	49.26	0.5952	0.686	3	37430.2	840	2.732	1.753
0.04	-0.0312	-0.05	49.54	0.5583	0.6982	4	37431.2	780	2.722	1.755
0.0415	-0.0314	-0.1	49.17	0.5334	0.7007	5	37432.2	860	2.71	1.738
0.0394	-0.0275	-0.05	49.4	0.4846	0.7031	6	37433.2	960	2.708	1.736
0.0407	-0.0322	-0.14	50.09	0.4761	0.6958	7	37434.2	1000	2.71	1.75
0.0417	-0.0289	-0.1	50.6	0.2722	0.6958	8	37435.2	940	2.7	1.75
0.0402	-0.0279	-0.05	50.74	0.4238	0.7031	9	37436.2	880	2.7	1.748
0.0407	-0.0302	0	49.67	0.2424	0.686	10	37437.2	860	2.693	1.741
0.0689	-0.0283	-0.1	62.27	0.1738	0.9351	11	37438.2	880	2.708	1.755
0.13	-0.0201	2.52	65.79	0.1865	1.1011	12	37439.2	1380	2.712	1.77
0.2011	-0.0074	5.05	71.81	0.0022	1.3232	13	37440.2	1960	2.727	1.782
0.2155	-0.0115	9.09	65.79	0.1025	1.3062	14	37441.2	2600	2.708	1.785
0.1718	-0.0236	11.85	57.36	0.4373	1.2256	15	37442.2	2820	2.693	1.785
0.1275	-0.0404	14	48.98	0.0339	1.1133	16	37443.2	2760	2.693	1.79
0.0841	-0.042	15.19	52.04	0.0193	0.9619	17	37444.2	2660	2.678	1.775
0.0548	-0.0347	16.28	49.3	0.0413	0.8569	18	37445.2	1960	2.654	1.768
0.0361	-0.0427	16.09	35.41	0.4138	0.708	19	37446.2	1620	2.642	1.755
0.0288	-0.025	15.9	35.13	0.0513	0.708	20	37447.2	1500	2.646	1.775
-0.0634	-0.0347	14.81	35.87	0.0007	0.6909	21	37448.2	1320	2.639	1.768
-0.1208	-0.048	11.95	42.4	0.0029	0.6982	22	37449.2	1240	2.644	1.765
-0.2022	-0.0463	7.28	42.36	0.4214	0.6982	23	37450.2	1140	2.649	1.78
-0.1641	-0.0388	2.76	47.17	0.8562	0.708	24	37451.2	1040	2.642	1.772
0.0452	-0.0423	3.19	49.3	0.7351	0.7495	25	37452.2	1080	2.654	1.775
0.1134	-0.0443	3.48	56.16	0.2114	0.9253	26	37453.2	1180	2.644	1.777
0.1484	-0.0046	5.67	57.69	0.0134	1.0034	27	37454.2	1620	2.664	1.836
0.1193	0.1082	8.33	55.32	0.3076	1.0205	28	37455.2	1780	2.644	1.772
0.0728	0.1645	10.19	55.14	0.3474	1.1084	29	37456.2	2300	2.642	1.782
0.113	0.1918	11.66	52.04	0.6797	1.0645	30	37457.2	2200	2.649	1.809
0.0952	0.1668	12.9	42.54	0.7546	0.9692	31	37458.2	2420	2.634	1.785
0.0589	0.035	13.76	32.45	0.283	0.7568	32	37459.2	2240	2.62	1.792
0.0404	-0.0019	14	38.47	0.2637	0.7031	33	37460.2	1420	2.605	1.775
0.0073	-0.0117	13.71	38.28	0.0046	0.7373	34	37461.2	1140	2.603	1.775
-0.0141	-0.0029	12.71	38.61	0.0139	0.6885	35	37462.2	1180	2.62	1.772
-0.0745	-0.015	10.57	43.47	0.3899	0.6934	36	37463.2	1160	2.625	1.807
-0.103	-0.0062	7.86	38.79	0.8555	0.7007	37	37464.2	1140	2.607	1.77
-0.0893	-0.0111	5.43	43.01	0.8535	0.6982	38	37465.2	1160	2.593	1.765
-0.0643	-0.0074	3.14	46.06	0.8598	0.7056	39	37466.2	1240	2.605	1.772
-0.0641	-0.0072	-0.05	46.34	0.8445	0.6982	40	37467.2	980	2.605	1.775
0.0058	-0.0076	-0.05	48.79	0.7917	0.6909	41	37468.2	1180	2.593	1.775
0.0337	-0.0097	-0.1	48.98	0.6038	0.7007	42	37469.2	900	2.59	1.77
0.0357	-0.0107	-0.1	46.57	0.5215	0.7007	43	37470.2	880	2.595	1.763
0.0355	-0.0101	-0.05	48.75	0.4204	0.708	44	37471.2	920	2.595	1.758
0.0353	-0.0109	-0.05	47.96	0.229	0.7007	45	37472.2	900	2.583	1.758
0.0364	-0.0115	-0.1	47.27	0.2349	0.6958	46	37473.2	940	2.583	1.76
0.0345	-0.0062	-0.1	48.01	0.1082	0.708	47	37474.2	1000	2.578	1.755
0.0363	-0.0107	-0.1	48.56	0.095	0.7007	48	37475.2	840	2.605	1.775
0.0368	-0.0127	-0.1	48.89	0.1555	0.6909	49	37476.2	940	2.59	1.765
0.0351	-0.0113	-0.05	48.84	0.0999	0.6909	50	37477.2	880	2.588	1.758
0.0413	-0.0107	-0.1	48.93	0.2656	0.7104	51	37478.2	920	2.583	1.765
0.1308	-0.0068	2.86	82.69	0.2217	1.5063	52	37479.2	1400	2.598	1.782
0.3216	-0.0136	6.95	76.3	0.145	1.5259	53	37480.2	2580	2.615	1.785
0.2279	-0.0056	11.38	71.63	0.4797	1.5112	54	37481.2	2920	2.595	1.782
0.2081	0.011	14.62	67.55	0.5044	1.5356	55	37482.2	3340	2.598	1.794
0.1894	-0.0158	17.76	58.98	0.425	1.4307	56	37483.2	3660	2.576	1.785
0.1398	-0.0201	20.52	66.35	0.3403	1.3623	57	37484.2	3500	2.607	1.799
0.1271	0.0209	21.99	61.48	0.3723	1.2231	58	37485.2	2960	2.585	1.799
0.1189	-0.0086	23.38	53.1	0.3447	1.0718	59	37486.2	2760	2.576	1.79
0.0808	-0.0089	23.9	50.88	0.1299	0.9204	60	37487.2	2400	2.563	1.775
0.0476	-0.0072	23.8	37.87	0.4131	0.7178	61	37488.2	1900	2.539	1.76
0.0575	-0.0287	23.76	35.18	0.5317	0.7153	62	37489.2	1560	2.544	1.763
-0.0175	-0.0338	23.18	35.78	0.158	0.6982	63	37490.2	1360	2.563	1.78
-0.0979	-0.0101	20.9	36.85	0.3357	0.7056	64	37491.2	1220	2.546	1.748
-0.0266	-0.0091	19.14	39.02	0.1582	0.7031	65	37492.2	1180	2.529	1.731
-0.0061	0	18.42	32.31	0.4751	0.708	66	37493.2	1380	2.551	1.76
0.0769	-0.0052	18.57	55.65	0.5906	1.084	67	37494.2	1840	2.573	1.775
0.1148	-0.0041	19.57	54.95	0.6118	1.001	68	37495.2	2160	2.581	1.77
0.1079	0.0143	19.8	56.58	0.165	1.0132	69	37496.2	1920	2.583	1.775
0.0843	0.0106	20.66	53.89	0.2695	1.0815	70	37497.2	2460	2.563	1.76
0.1234	-0.0086	21.8	48.47	0.4302	0.9229	71	37498.2	2220	2.576	1.775
0.022	-0.016	21.71	30.27	0.7158	0.7056	72	37499.2	2080	2.554	1.755
0.0198	-0.0119	21.28	28.74	0.4097	0.7153	73	37500.2	1960	2.554	1.763
0.014	-0.0074	20.47	28.42	0.4209	0.6982	74	37501.2	1620	2.537	1.748
-0.0958	-0.0027	18.42	32.12	0.0017	0.7202	75	37502.2	1680	2.539	1.753
-0.2046	-0.0341	14	36.38	-0.0129	0.7056	76	37503.2	1360	2.551	1.755
-0.153	-0.0002	10	44.21	0.1677	0.7202	77	37504.2	1040	2.546	1.775
-0.0591	-0.0371	8.09	36.52	0.8328	0.708	78	37505.2	1160	2.544	1.77
-0.0335	-0.0263	6.9	37.17	0.8201	0.7153	79	37506.2	1300	2.534	1.748
-0.137	-0.0158	3.57	45.14	0.8203	0.7031	80	37507.2	1040	2.554	1.76
-0.119	-0.0246	-0.1	47.31	0.821	0.6958	81	37508.2	840	2.546	1.765
0.038	-0.0214	-0.05	50.6	0.7939	0.7031	82	37509.2	860	2.556	1.765
0.0632	-0.0257	-0.1	53.01	0.5417	0.896	83	37510.2	940	2.549	1.765
0.1396	-0.0271	2.38	64.77	0.2505	1.106	84	37511.2	1460	2.551	1.76
0.2148	-0.0234	5.86	61.81	0.2512	1.1938	85	37512.2	2180	2.563	1.782
0.1782	-0.0175	8.81	55.79	0.4399	1.167	86	37513.2	2360	2.581	1.782
0.1333	-0.0384	11.28	51.71	0.4509	1.1938	87	37514.2	2540	2.563	1.775
0.1118	-0.023	13.23	49.17	0.5691	1.2085	88	37515.2	3100	2.559	1.772
0.1433	-0.0214	15.09	51.34	0.5974	1.2158	89	37516.2	3160	2.576	1.787
0.112	-0.0312	17.09	61.16	0.5234	1.1792	90	37517.2	2800	2.571	1.792
0.1101	-0.0068	18.33	58.89	0.5156	1.1377	91	37518.2	2500	2.563	1.792
0.0884	-0.0023	19.52	57.36	0.4978	1.1426	92	37519.2	2500	2.573	1.792
0.0898	0.0073	20.71	51.99	0.4673	1.1182	93	37520.2	2540	2.556	1.777
0.0913	-0.0074	21.57	51.16	0.3484	1.0962	94	37521.2	2540	2.568	1.799
0.0923	-0.0181	22.61	52.13	0.5107	1.0913	95	37522.2	2480	2.568	1.794

0.0837	-0.0283	23.42	58.75	0.3345	1.1035	96	37523.2	2380	2.571	1.809
0.0784	-0.0082	24.14	61.07	0.6348	1.106	97	37524.2	2300	2.568	1.792
0.0917	-0.0103	24.9	56.44	0.5999	1.0376	98	37525.2	2160	2.559	1.785
0.0634	-0.0222	25.9	58.29	0.6833	1.0522	99	37526.2	2300	2.563	1.79
0.0525	-0.005	26.09	51.71	0.5801	0.9058	100	37527.2	2400	2.566	1.777
0.0458	-0.0062	26.33	50.42	0.1643	0.9448	101	37528.2	1940	2.563	1.787
0.0544	-0.0048	26.56	36.24	0.6223	0.7129	102	37529.2	2040	2.537	1.76
0.0402	-0.0207	26.61	49.17	0.4768	0.9497	103	37530.2	1780	2.561	1.785
0.0601	-0.0298	26.95	48.1	0.7627	0.9717	104	37531.2	2000	2.561	1.782
0.0614	-0.013	27.71	49.58	0.7151	0.9546	105	37532.2	2120	2.566	1.785
0.0566	-0.0052	27.9	47.36	0.4939	0.9619	106	37533.2	2060	2.561	1.79
0.0497	-0.0095	28.37	47.36	0.3848	0.9595	107	37534.2	2040	2.566	1.775
0.0476	-0.0052	28.85	41.8	0.5461	0.813	108	37535.2	2060	2.566	1.792
0.0364	-0.0134	28.52	43.24	0.0786	0.835	109	37536.2	1980	2.571	1.799
0.0441	-0.0214	28.95	44.86	0.1956	0.8936	110	37537.2	1800	2.571	1.794
0.0335	-0.008	28.9	44.86	0.2988	0.9009	111	37538.2	1980	2.566	1.785
0.047	-0.0091	29.28	60.19	0.5681	1.1255	112	37539.2	2100	2.578	1.794
0.0698	-0.017	30.28	61.25	0.4607	1.1792	113	37540.2	2240	2.573	1.797
0.0823	-0.0166	30.8	59.63	0.385	1.1768	114	37541.2	2560	2.583	1.797
0.087	-0.0074	32.09	59.82	0.4307	1.1694	115	37542.2	2500	2.573	1.797
0.081	-0.0058	32.9	58.75	0.334	1.1719	116	37543.2	2360	2.576	1.785
0.0771	-0.0246	33.52	53.66	0.7136	1.062	117	37544.2	2840	2.595	1.794
0.0646	-0.0011	33.99	43.84	0.4873	0.8765	118	37545.2	2480	2.588	1.79
0.0245	-0.022	34.13	32.54	0.4141	0.7495	119	37546.2	2100	2.566	1.785
0.0296	-0.0052	33.37	28.74	0.4985	0.7446	120	37547.2	1980	2.576	1.79
0.0236	-0.014	33.18	30.04	0.4917	0.7495	121	37548.2	2020	2.566	1.782
0.0306	-0.0285	33.04	31.61	0.0186	0.7568	122	37549.2	1780	2.585	1.79
0.0409	-0.0203	32.47	35.5	0.3181	0.8154	123	37550.2	1980	2.59	1.797
0.0452	0.0051	32.52	34.25	0.6738	0.8252	124	37551.2	2200	2.585	1.804
0.0253	-0.0091	32.61	35.36	0.5427	0.8179	125	37552.2	2080	2.576	1.797
0.0318	-0.006	32.47	35.5	0.4951	0.8301	126	37553.2	2060	2.578	1.809
0.0265	-0.0267	32.33	36.01	0.4382	0.8203	127	37554.2	1980	2.576	1.802
0.0474	0.01	32.61	35.41	0.4956	0.8179	128	37555.2	2220	2.595	1.802
0.0189	0.0239	32.28	34.9	0.4504	0.8105	129	37556.2	2020	2.595	1.797
0.0413	-0.0068	32.52	35.18	0.407	0.8057	130	37557.2	2000	2.578	1.782
0.0298	0.0034	32.52	34.76	0.7283	0.8105	131	37558.2	1960	2.593	1.804
0.031	0.003	32.09	36.43	0.3287	0.813	132	37559.2	2100	2.595	1.809
0.0396	-0.0058	32.14	43.28	0.3284	0.9448	133	37560.2	2040	2.605	1.814
0.047	0.0121	32.42	44.44	0.7727	0.957	134	37561.2	2280	2.6	1.807
0.0441	-0.0164	32.52	31.75	0.7161	0.7056	135	37562.2	2000	2.607	1.812
0.023	-0.0179	31.99	28.46	0.4714	0.7153	136	37563.2	1840	2.6	1.809
0.0124	0.0061	31.56	34.86	0.0823	0.7007	137	37564.2	1480	2.61	1.812
0.0171	0.0067	31.37	34.99	-0.0034	0.7056	138	37565.2	1460	2.598	1.809
0.0249	0.0024	30.85	31.38	0.0161	0.7104	139	37566.2	1520	2.588	1.797
0.0157	-0.0113	30.47	32.54	0.1865	0.7104	140	37567.2	1420	2.61	1.814
0.0148	0.0016	30.18	34.76	-0.0039	0.7227	141	37568.2	1400	2.605	1.814
0.0011	-0.0111	29.8	32.35	0.0022	0.7178	142	37569.2	1480	2.605	1.812
0.0343	-0.0013	29.75	31.38	0.1919	0.7007	143	37570.2	1540	2.605	1.807
0.0175	-0.0123	29.28	34.81	0.0278	0.7104	144	37571.2	1520	2.583	1.802
0.0167	0.0022	29.23	33.23	0.012	0.7178	145	37572.2	1520	2.595	1.824
0.0347	-0.0144	29.18	45.04	0.1951	0.9082	146	37573.2	1860	2.615	1.829
0.0464	-0.0084	29.61	31.89	0.8291	0.7007	147	37574.2	2200	2.598	1.797
0.0222	-0.0187	28.99	34.3	0.5632	0.7007	148	37575.2	1620	2.59	1.797
-0.0352	-0.0097	28.18	33.28	-0.0007	0.7153	149	37576.2	1340	2.595	1.812
-0.0628	0.0096	26.28	32.49	0.0098	0.6909	150	37577.2	1540	2.603	1.824
-0.0593	0.0055	24.04	34.02	0.4023	0.708	151	37578.2	1560	2.6	1.812
-0.0895	-0.0105	21.52	35.5	0.7664	0.7056	152	37579.2	1300	2.615	1.814
-0.0776	0.0012	19.28	38.1	0.6755	0.7031	153	37580.2	1380	2.603	1.826
-0.0911	-0.0035	16.52	35.13	0.0657	0.6982	154	37581.2	1280	2.605	1.814
-0.1071	-0.0007	13.43	34.76	0.3914	0.7007	155	37582.2	1360	2.595	1.809
-0.0979	-0.008	10.81	40.13	0.8025	0.7056	156	37583.2	1220	2.593	1.829
-0.1286	-0.0105	7.33	37.77	0.8472	0.7056	157	37584.2	1120	2.595	1.814
-0.0891	-0.0107	4.76	42.64	0.8455	0.708	158	37585.2	1160	2.59	1.812
-0.0089	-0.0082	3.33	44.63	0.8479	0.7056	159	37586.2	1080	2.615	1.829
0.0989	-0.0127	4.43	53.75	0.5173	0.9375	160	37587.2	1340	2.6	1.819
0.1749	-0.0148	7.05	60.65	0.5225	1.1279	161	37588.2	2120	2.627	1.829
0.1728	-0.0029	10.09	54.49	0.5356	1.1499	162	37589.2	2300	2.595	1.814
0.1523	-0.0056	12.85	56.25	0.365	1.1719	163	37590.2	2560	2.625	1.838
0.1288	-0.0164	14.81	54.17	0.4731	1.1597	164	37591.2	2900	2.634	1.831
0.1345	-0.0041	16.66	61.99	0.397	1.1816	165	37592.2	2540	2.629	1.833
0.115	0.0069	18.52	60.65	0.5847	1.1621	166	37593.2	2500	2.637	1.833
0.112	0.0073	20.09	59.72	0.4683	1.1304	167	37594.2	2540	2.617	1.819
0.0968	0.0059	21.57	56.02	0.6213	1.0815	168	37595.2	2500	2.629	1.819
0.0767	0.0108	22.47	51.71	0.3567	1.0767	169	37596.2	2800	2.642	1.819
0.0825	-0.0015	23.14	56.53	0.406	1.0718	170	37597.2	2840	2.646	1.824
0.0704	0.0211	24.33	62.92	0.3074	1.1816	171	37598.2	2220	2.625	1.802
0.1144	-0.0048	25.37	64.86	0.4717	1.2134	172	37599.2	2420	2.646	1.819
0.0831	0.0155	27.09	65.61	0.4526	1.2354	173	37600.2	2460	2.654	1.809
0.1009	0.0012	28.14	66.72	0.4063	1.2573	174	37601.2	2460	2.646	1.812
0.0978	-0.0099	29.75	64.91	0.5601	1.2427	175	37602.2	2580	2.664	1.804
0.0925	-0.0187	30.75	62.78	0.5486	1.2085	176	37603.2	2640	2.634	1.782
0.0939	0.009	32.04	58.24	0.6875	1.123	177	37604.2	2620	2.642	1.782
0.0657	0.0055	32.33	45.32	0.5715	0.8716	178	37605.2	2400	2.649	1.785
0.0364	-0.0152	32.85	41.85	0.4568	0.9155	179	37606.2	2240	2.651	1.785
0.0527	0.0104	33.23	58.06	0.0671	1.1719	180	37607.2	2360	2.651	1.77
0.0745	0.0016	34.04	71.16	0.3284	1.4233	181	37608.2	2900	2.668	1.792
0.103	-0.0033	35.32	69.82	0.3608	1.3989	182	37609.2	3000	2.681	1.797
0.0792	0.0006	36.37	57.55	0.5383	1.0986	183	37610.2	2960	2.673	1.775
0.0613	0	37.09	43.05	0.6067	0.9229	184	37611.2	2640	2.659	1.765
0.0407	0.0102	36.94	34.11	0.3315	0.8203	185	37612.2	2180	2.646	1.748
0.0304	0.0061	36.71	33.65	0.6646	0.7715	186	37613.2	2060	2.661	1.76
0.0259	0.0291	36.13	26.01	0.6599	0.7202	187	37614.2	2420	2.666	1.763
0.0187	0.0131	36.23	29.99	0.4104	0.7104	188	37615.2	1880	2.654	1.755
0.0218	0.0016	35.75	31.66	0.082	0.791	189	37616.2	2080	2.644	1.743
0.0339	-0.0119	35.56	31.01	0.3511	0.8008	190	37617.2	2180	2.649	1.755
0.0441	-0.0537	35.42	31.34	0.4561	0.7861	191	37618.2	2260	2.656	1.765
0.0083	-0.0236	35.13	30.36	0.6006	0.791	192	37619.2	2120	2.659	1.753
0.0241	0.0092	35.18	31.71	0.52	0.8032	193	37620.2	2100	2.654	1.753
0.0185	0.0282	34.61	36.24	0.4663	0.8691	194	37621.2	2300	2.642	1.753
0.0437	0.0246	34.8	32.03	0.4851	0.73	195	37622.2	2220	2.659	1.755
0.0243	0.0698	34.37	28.19	0.7581	0.6982	196	37623.2	1900	2.661	1.755
0.0253	0.0495	33.94	30.69	0.2043	0.7178	197	37624.2	1820	2.661	1.77

0.0099	0.0375	33.66	30.97	0.0039	0.7153	198	37625.2	1740	2.659	1.765
0.0357	0.0526	33.94	39.86	0.1038	0.9155	199	37626.2	1940	2.651	1.753
0.0579	0.044	33.61	42.31	0.7878	0.9229	200	37627.2	2140	2.659	1.765
0.0021	0.0545	33.8	39.9	0.6614	0.8838	201	37628.2	2340	2.668	1.763
0.0472	0.0438	33.85	29.62	0.4861	0.7104	202	37629.2	2060	2.661	1.755
0.0062	0.0198	33.23	29.58	0.4707	0.7104	203	37630.2	1900	2.651	1.753
0.0173	0.0471	33.09	35.46	-0.0022	0.7202	204	37631.2	1540	2.661	1.772
0.0343	0.0563	32.8	41.01	-0.0105	0.8301	205	37632.2	1460	2.659	1.765
0.0571	0.0082	32.37	40.97	0.3906	0.9155	206	37633.2	2160	2.668	1.772
0.0548	0.0752	32.75	43.84	0.7173	0.8862	207	37634.2	2160	2.673	1.775
0.0779	0.0567	33.04	43.7	0.3623	0.9326	208	37635.2	2200	2.673	1.777
0.0243	0.0496	32.9	33.28	0.7429	0.769	209	37636.2	2160	2.671	1.775
0.0171	0.0012	32.61	29.02	0.446	0.7031	210	37637.2	2380	2.671	1.78
0.006	0.0248	32.66	30.97	0.053	0.7007	211	37638.2	1500	2.659	1.794
-0.1919	0.0493	28.14	33.93	-0.0083	0.6885	212	37639.2	1480	2.668	1.772
-0.4137	0.0131	19.38	37.31	-0.0056	0.6958	213	37640.2	1300	2.656	1.76
-0.4925	0.0381	8.62	36.99	0.1611	0.7104	214	37641.2	1260	2.659	1.775
-0.2845	0.0444	-0.14	56.85	0.8467	0.6836	215	37642.2	860	2.651	1.765
0.0376	0.0379	-0.05	44.49	0.8435	0.708	216	37643.2	880	2.654	1.775
0.0343	0.0366	-0.05	50.18	0.4316	0.6958	217	37644.2	1100	2.644	1.765
0.0331	0.0346	-0.05	48.66	0.79	0.6934	218	37645.2	1020	2.654	1.772
0.0384	0.0329	-0.1	47.96	0.7605	0.6885	219	37646.2	1020	2.654	1.772
0.0341	0.0362	-0.1	50.79	0.5862	0.6958	220	37647.2	1020	2.661	1.78
0.0312	0.0389	-0.1	49.3	0.5718	0.708	221	37648.2	980	2.651	1.775
0.0333	0.0348	-0.05	48.1	0.5105	0.7007	222	37649.2	940	2.644	1.76
0.0341	0.0373	0	48.75	0.6575	0.6934	223	37650.2	860	2.664	1.77
0.0327	0.0387	-0.1	49.07	0.5815	0.7007	224	37651.2	1100	2.642	1.77
0.0357	0.036	-0.05	48.66	0.3469	0.6909	225	37652.2	900	2.642	1.77
0.0339	0.0348	-0.1	49.58	0.3665	0.7031	226	37653.2	960	2.642	1.768
0.0298	0.0323	-0.05	49.63	0.073	0.6982	227	37654.2	940	2.644	1.768
0.0321	0.0319	-0.05	50.65	0.0684	0.6934	228	37655.2	940	2.644	1.77
0.0351	0.0332	-0.19	53.19	0.1399	0.6958	229	37656.2	800	2.634	1.765
0.0366	0.0354	0	52.31	0.0313	0.7007	230	37657.2	820	2.649	1.763
0.0366	0.0391	-0.05	51.11	0.0273	0.7007	231	37658.2	860	2.632	1.755
0.0335	0.0364	-0.1	50.55	0.052	0.7031	232	37659.2	900	2.644	1.772
0.0333	0.0368	-0.1	49.72	0.0459	0.686	233	37660.2	760	2.644	1.755
0.0314	0.0375	-0.05	50.14	0.2339	0.6958	234	37661.2	880	2.654	1.755
0.0331	0.0381	-0.05	49.4	0.5161	0.7153	235	37662.2	980	2.639	1.753
0.0351	0.0366	-0.05	50.14	0.5466	0.6962	236	37663.2	840	2.629	1.741
0.0302	0.0354	-0.05	51.25	0.3813	0.7031	237	37664.2	820	2.644	1.75
0.031	0.0383	-0.05	49.58	0.4963	0.686	238	37665.2	780	2.639	1.741
0.0349	0.0358	-0.05	50.28	0.2837	0.7007	239	37666.2	900	2.632	1.741
0.0318	0.0375	-0.05	50.18	0.0613	0.7007	240	37667.2	800	2.625	1.716
0.0366	0.0411	-0.1	50.65	0.2327	0.7031	241	37668.2	840	2.642	1.729
0.032	0.036	-0.1	51.06	0.2786	0.6958	242	37669.2	860	2.632	1.733
0.0374	0.0362	-0.14	50.51	0.1787	0.7007	243	37670.2	900	2.632	1.721
0.0337	0.0342	-0.05	49.3	0.6494	0.7007	244	37671.2	860	2.634	1.716
0.0353	0.0373	-0.05	50.32	0.6565	0.7056	245	37672.2	880	2.615	1.702
0.0556	0.0463	-0.05	55.7	0.426	0.8252	246	37673.2	880	2.634	1.731
0.1566	0.0383	2.19	78.48	0.1792	1.3843	247	37674.2	1620	2.639	1.738
0.3052	0.0223	7.66	77.09	0.0942	1.5503	248	37675.2	2540	2.654	1.746
0.2552	-0.0492	12.33	78.06	0.4888	1.5991	249	37676.2	3080	2.659	1.726
0.1894	-0.197	16.52	74.91	0.4731	1.626	250	37677.2	3380	2.656	1.741
0.1636	-0.2562	20.28	75.28	0.501	1.6968	251	37678.2	4000	2.659	1.763
0.1534	-0.2443	23.61	90.15	0.3474	1.9751	252	37679.2	3480	2.668	1.753
0.1808	-0.2414	26.71	89.87	0.2192	2.0508	253	37680.2	3620	2.673	1.743
0.1929	-0.1996	29.52	90.85	0.4705	2.2192	254	37681.2	3820	2.646	1.721
0.1741	-0.2644	32.71	94.18	0.456	2.4634	255	37682.2	3940	2.654	1.733
0.2023	-0.1945	35.71	90.71	0.4888	2.4585	256	37683.2	4160	2.659	1.729
0.1784	-0.0941	38.23	90.71	0.4556	2.4756	257	37684.2	4160	2.678	1.738
0.1716	0.0051	40.94	87.74	0.5298	2.3315	258	37685.2	4620	2.69	1.736
0.1441	0.0516	43.18	86.82	0.5049	2.1582	259	37686.2	4520	2.705	1.755
0.1554	0.0586	44.8	83.16	0.3577	2.0703	260	37687.2	4440	2.727	1.76
0.1544	0.0366	46.04	88.85	0.3374	2.0093	261	37688.2	4140	2.739	1.746
0.14	0.0629	47.37	86.96	0.4475	2.041	262	37689.2	3660	2.742	1.76
0.146	0.0428	0.0428	48.46	88.85	0.3469	2.063	263	37690.2	3800	2.729	1.746
0.1036	0.0084	49.61	89.73	0.4517	2.0776	264	37691.2	3780	2.761	1.75
0.0866	0.0928	50.8	88.85	0.5364	2.0703	265	37692.2	3780	2.764	1.743
0.1081	0.0875	52.08	89.13	0.4922	2.29	266	37693.2	3840	2.781	1.746
0.1591	0.044	53.99	93.21	0.6604	2.8394	267	37694.2	4220	2.766	1.726
0.1521	0.0137	56.22	90.29	0.8127	2.8345	268	37695.2	4280	2.773	1.721
0.1489	-0.048	58.22	95.8	0.8125	2.8125	269	37696.2	4640	2.798	1.733
0.1289	-0.0089	59.79	88.62	0.8108	2.4292	270	37697.2	4260	2.81	1.731
0.1161	-0.0066	61.94	88.81	0.6289	2.3291	271	37698.2	4280	2.839	1.755
0.128	-0.0187	63.41	85.47	0.4399	2.229	272	37699.2	4160	2.844	1.746
0.09	0.0543	64.22	89.69	0.4304	2.0679	273	37700.2	4060	2.888	1.772
0.113	0.0651	65.36	77.69	0.3547	1.438	274	37701.2	3120	2.9	1.777
0.0427	0.0241	65.56	73.11	0.1621	1.3379	275	37702.2	2660	2.891	1.775
0.0786	-0.0166	65.51	60.28	0.1409	1.2134	276	37703.2	2900	2.888	1.77
-0.002	0.0129	65.27	56.9	0.1062	1.1401	277	37704.2	2800	2.876	1.755
0.0263	0.0338	65.17	45.65	0.135	1.0254	278	37705.2	2740	2.888	1.758
0.0452	0.0512	64.89	45.09	0.2375	1.0156	279	37706.2	2760	2.878	1.755
0.0263	0.0157	64.75	43.28	0.3059	1.0425	280	37707.2	2820	2.878	1.753
0.0366	-0.0175	64.41	44.02	0.4541	1.04	281	37708.2	2640	2.861	1.741
0.0654	0.0272	64.32	43.42	0.5515	1.0229	282	37709.2	2980	2.878	1.755
0.0415	-0.0125	64.27	44.77	0.5859	1.0034	283	37710.2	2820	2.888	1.77
0.0155	0.0325	64.13	36.11	0.5718	0.9741	284	37711.2	2860	2.878	1.765
0.0329	0.0127	63.84	34.76	0.625	0.9326	285	37712.2	2880	2.881	1.772
0.0204	-0.0117	63.37	37.26	0.5945	0.9277	286	37713.2	2760	2.876	1.77
0.0523	0.027	62.79	36.89	0.3735	0.9351	287	37714.2	2760	2.886	1.792
0.0081	-0.0232	62.98	35.23	0.4844	0.9229	288	37715.2	2720	2.886	1.792
0.0279	0.0233	62.6	31.8	0.6321	0.8496	289	37716.2	2760	2.883	1.794
0.0105	0.0207	62.03	27.4	0.7822	0.8374	290	37717.2	2900	2.874	1.782
-0.0001	-0.0084	61.65	29.71	0.3464	0.874	291	37718.2	2840	2.866	1.809
0.0175	-0.0271	61.27	32.59	0.1135	0.9131	292	37719.2	2740	2.878	1.807
0.0154	0.0153	60.99	34.95	0.5266	0.8984	293	37720.2	2540	2.876	1.812
-0.0137	-0.0134	60.7	34.62	0.4053	0.9106	294	37721.2	2600	2.874	1.821
0.0247	0.0368	60.08	34.72	0.3765	0.9351	295	37722.2	2820	2.856	1.804
0.0009	0.0047	59.94	34.21	0.3022	0.9106	296	37723.2	2540	2.869	1.824
0.0167	0.033	59.65	34.9	0.3074	0.896	297	37724.2	2600	2.883	1.836
0.0364	0.0137	59.22	35.23	0.3972	0.9131	298	37725.2	2360	2.878	1.826
0.0394	-0.0183	58.65	47.87	0.1919	1.0498	299	37726.2	2780	2.878	1.841

0.0429	0.0424	58.8	54.35	0.5847	1.0962	300	37727.2	2460	2.898	1.836
0.0624	-0.0105	58.7	53.56	0.4045	1.0913	301	37728.2	2660	2.898	1.855
0.0402	0.0186	58.8	62.27	0.376	1.1401	302	37729.2	2580	2.891	1.87
0.0286	0.0194	58.94	63.75	0.5864	1.1499	303	37730.2	2380	2.908	1.865
0.062	0.0082	58.89	62.83	0.6768	1.1548	304	37731.2	2540	2.908	1.858
0.0681	-0.0099	59.18	60.65	0.5874	1.1597	305	37732.2	2680	2.908	1.877
0.0284	0.0407	59.13	58.8	0.5488	1.0913	306	37733.2	2560	2.908	1.87
0.0462	0.0342	58.8	46.57	0.5486	1.0107	307	37734.2	2640	2.893	1.86
0.0333	0.0241	58.37	45.92	0.4382	0.9937	308	37735.2	2620	2.908	1.882
0.0421	0.0332	57.65	46.16	0.3105	1.0034	309	37736.2	2440	2.893	1.863
0.0146	0.0116	57.27	40.13	0.5317	0.9229	310	37737.2	2460	2.898	1.89
0.031	0.0166	56.61	41.34	0.1216	0.9424	311	37738.2	2280	2.896	1.887
0.0021	0.0127	55.94	41.06	0.5525	0.9424	312	37739.2	2420	2.9	1.89
0.0202	0.0055	55.7	39.58	0.5732	0.9328	313	37740.2	2740	2.898	1.88
0.0138	-0.005	55.51	40.32	0.5146	0.9351	314	37741.2	2660	2.903	1.892
0.037	0.0147	55.18	41.34	0.3484	0.9668	315	37742.2	2560	2.908	1.892
0.0807	0.1914	55.13	40.51	0.3696	0.9351	316	37743.2	2300	2.908	1.902
0.0132	0.2848	55.18	39.86	0.5088	0.9277	317	37744.2	2640	2.893	1.902
-0.0007	0.3086	54.84	31.2	0.7097	0.896	318	37745.2	2480	2.881	1.873
0.02	0.3334	54.37	25.78	0.6882	0.8911	319	37746.2	3100	2.893	1.887
0.057	0.3274	54.22	33.79	0.4082	0.9131	320	37747.2	3280	2.893	1.902
0.0302	0.3067	54.18	37.03	0.1836	0.9351	321	37748.2	2660	2.888	1.89
0.0517	0.311	54.22	39.95	0.4333	0.9692	322	37749.2	2680	2.913	1.909
0.0402	0.2848	54.51	56.44	0.4846	1.1841	323	37750.2	2860	2.896	1.912
0.0767	0.3114	54.8	70.01	0.4819	1.2598	324	37751.2	2580	2.937	1.943
0.0579	0.1916	55.65	81.35	0.1985	1.5161	325	37752.2	3160	2.937	1.938
0.0716	-0.0162	56.46	86.58	0.2925	1.6455	326	37753.2	2860	2.942	1.956
0.1046	-0.0375	57.03	89.32	0.4302	1.6479	327	37754.2	2580	2.937	1.926
0.0872	-0.0634	57.84	88.07	0.5669	1.6431	328	37755.2	2520	2.942	1.96
0.1032	-0.0195	58.51	90.85	0.3599	1.7969	329	37756.2	2540	2.952	1.946
0.0566	-0.1011	59.13	90.8	0.4373	1.792	330	37757.2	2620	2.961	1.948
0.0736	-0.0373	59.94	87.37	0.5842	1.6211	331	37758.2	2480	2.966	1.953
0.0704	-0.05	59.94	79.04	0.5671	1.416	332	37759.2	2340	2.976	1.946
0.0486	-0.0324	60.32	78.48	0.3542	1.4087	333	37760.2	2520	2.981	1.96
0.0638	-0.048	60.65	75.84	0.387	1.3403	334	37761.2	2800	2.971	1.96
0.062	-0.0576	60.41	69.36	0.5339	1.2671	335	37762.2	2620	2.986	1.973
0.0527	-0.0168	60.65	70.28	0.5061	1.2573	336	37763.2	2400	2.993	1.956
0.0347	0.0614	60.51	69.91	0.478	1.2817	337	37764.2	2580	2.986	1.963
0.0247	0.0225	60.7	70.42	0.4395	1.2744	338	37765.2	2820	3.008	1.968
0.0152	0.0496	60.89	70.98	0.4446	1.2524	339	37766.2	2420	3	1.96
0.0417	0.0106	61.03	71.26	0.4534	1.2646	340	37767.2	2580	2.998	1.975
0.0306	0.0815	60.79	70.79	0.4834	1.2769	341	37768.2	2380	3.005	1.968
0.065	0.0295	61.22	72	0.4326	1.2842	342	37769.2	2800	3.003	1.958
0.0507	0.0725	61.7	71.16	0.4211	1.2866	343	37770.2	2660	2.996	1.968
0.0427	0.044	62.13	69.91	0.4792	1.2695	344	37771.2	2720	3.02	1.97
0.0586	0.05	62.46	63.85	0.6899	1.1938	345	37772.2	2700	3.015	1.968
0.0404	0.052	62.79	54.77	0.3906	1.1499	346	37773.2	2700	2.996	1.953
0.0611	0.0221	63.08	54.17	0.2983	1.1182	347	37774.2	2700	3.008	1.958
0.0402	0.0789	63.41	43.24	0.5574	0.9814	348	37775.2	2760	2.996	1.965
0.0283	0.0596	63.56	40.09	0.2949	0.9937	349	37776.2	3000	3	1.951
0.0318	0.0289	63.37	36.01	0.6196	0.957	350	37777.2	2560	3.003	1.948
0.0116	0.0463	63.51	35.92	0.3687	0.9595	351	37778.2	2700	3.008	1.953
0.0343	0.0043	63.46	38.42	0.6641	0.9497	352	37779.2	2820	2.998	1.96
0.0218	0.0006	63.46	36.99	0.344	0.9668	353	37780.2	2900	2.998	1.96
0.0093	0.0596	63.65	41.2	0.2896	1.0254	354	37781.2	2800	2.993	1.956
0.0351	0.087	63.7	49.3	0.2976	1.106	355	37782.2	3040	2.993	1.951
0.0486	0.0465	63.89	49.95	0.6646	1.106	356	37783.2	2860	3.01	1.965
0.048	0.067	63.89	41.52	0.6338	1.0181	357	37784.2	3000	2.998	1.951
0.0269	0.0524	63.94	36.94	0.4351	0.9595	358	37785.2	2900	3.005	1.96
0.0093	0.053	63.7	34.58	0.3457	0.9399	359	37786.2	2980	3.003	1.953
0.0136	-0.0115	63.51	31.98	0.4907	0.8813	360	37787.2	2720	3.003	1.98
0.0036	-0.0371	63.37	28	0.7988	0.8594	361	37788.2	2620	2.991	1.946
0.0318	-0.067	63.32	31.75	0.3767	0.9229	362	37789.2	3060	3	1.948
0.0372	-0.0324	63.13	38.19	0.2517	1.0034	363	37790.2	3080	3.01	1.96
0.0267	0.0219	62.98	45.41	0.2813	1.0913	364	37791.2	2980	3.003	1.951
0.0396	0.0223	63.13	45.74	0.4402	1.0864	365	37792.2	2800	3.005	1.963
0.0554	0.0262	63.08	48.61	0.5955	1.0718	366	37793.2	2700	3.032	1.985
0.0589	-0.0308	63.18	49.54	0.5215	1.0815	367	37794.2	2520	3.025	1.97
0.0618	-0.0533	63.13	49.67	0.3857	1.0889	368	37795.2	2600	3.022	1.963
0.0187	-0.0289	63.08	50	0.3333	1.0889	369	37796.2	2700	3.01	1.963
0.032	-0.0884	62.79	48.47	0.4485	1.0791	370	37797.2	2720	3.042	1.982
0.0521	0.0006	62.7	48.89	0.3147	1.0645	371	37798.2	2920	3.03	1.96
0.0499	-0.0615	62.51	49.17	0.5225	1.0767	372	37799.2	2920	3.025	1.978
0.0355	0.0104	62.32	48.19	0.5706	1.0718	373	37800.2	2860	3.01	1.956
0.0521	0.0504	62.27	48.19	0.4995	1.0498	374	37801.2	2500	3.025	1.987
0.0226	0.0225	62.03	47.64	0.5642	1.0425	375	37802.2	2500	3.03	1.985
0.0491	-0.0296	62.13	46.76	0.5449	1.0522	376	37803.2	2400	3.035	1.975
0.0363	0.0446	61.89	45.69	0.4199	1.0547	377	37804.2	2820	3.035	1.978
0.037	0.0315	61.75	48.93	0.2813	1.0693	378	37805.2	2980	3.04	1.97
0.032	0.0321	61.79	50.09	0.4546	1.062	379	37806.2	2540	3.042	1.978
0.0563	0.0516	61.51	50.69	0.4565	1.1011	380	37807.2	2740	3.035	1.975
0.0417	0.0194	61.6	55	0.4905	1.1206	381	37808.2	2900	3.03	1.97
0.0489	0.0293	61.37	55.05	0.5232	1.1108	382	37809.2	2500	3.037	1.963
0.0478	0.0118	61.65	53.06	0.4836	1.123	383	37810.2	2740	3.04	1.99
0.0029	0.0918	61.84	52.82	0.4839	1.123	384	37811.2	2800	3.049	1.978
0.0374	0.0522	62.18	51.06	0.585	1.106	385	37812.2	2900	3.047	1.98
0.0511	0.0819	62.56	51.85	0.48	1.1206	386	37813.2	2740	3.052	1.973
0.0296	0.0012	62.89	50.88	0.5098	1.106	387	37814.2	2960	3.04	1.96
0.0558	0.0135	63.51	50.14	0.4136	1.106	388	37815.2	2800	3.047	1.965
0.0265	0.0098	63.56	51.25	0.4351	1.1011	389	37816.2	2820	3.057	1.973
0.0423	0	63.65	50.28	0.4382	1.1108	390	37817.2	3140	3.054	1.97
0.0489	0.0332	63.46	52.92	0.4326	1.145	391	37818.2	2780	3.052	1.97
0.0575	-0.0029	63.75	51.71	0.5491	1.1304	392	37819.2	2540	3.052	1.97
0.0253	0.0102	63.51	48.19	0.5476	1.0645	393	37820.2	3040	3.064	1.98
0.013	-0.0183	63.56	47.59	0.6177	1.0425	394	37821.2	2860	3.064	1.987
0.0429	-0.0353	63.27	46.16	0.2883	1.062	395	37822.2	2800	3.064	1.968
0.0159	-0.0168	63.32	43.84	0.4761	1.0327	396	37823.2	2820	3.054	1.963
0.0374	-0.0127	63.18	43.28	0.3176	1.0229	397	37824.2	2740	3.064	1.968
0.0271	0.0186	62.98	45.23	0.2529	1.0083	398	37825.2	2800	3.069	1.963
0.0491	-0.0289	62.94	43.01	0.2998	1.0205	399	37826.2	2720	3.064	1.963
0.0437	-0.0492	62.89	42.91	0.427	1.0181	400	37827.2	2700	3.052	1.956
0.0312	-0.0214	62.51	43.84	0.3567	1.0278	401	37828.2	2580	3.052	1.965

0.029	-0.0269	62.32	43.56	0.3833	1.0205	402	37829.2	2980	3.074	1.97
0.0392	-0.0025	62.27	43.98	0.4397	1.0107	403	37830.2	2620	3.071	1.98
0.0234	0.0125	62.27	38.47	0.6489	0.9399	404	37831.2	2740	3.047	1.958
0.0407	0.0348	62.22	39.9	0.4395	0.9473	405	37832.2	2940	3.052	1.951
0.0152	0.0211	61.84	39.16	0.6006	0.957	406	37833.2	2960	3.064	1.958
0.0079	0.012	61.84	41.01	0.6558	0.9546	407	37834.2	2760	3.081	1.965
0.046	0.0102	61.79	38.33	0.564	0.9814	408	37835.2	2700	3.059	1.948
0.0163	-0.0138	61.79	38.79	0.5945	0.9692	409	37836.2	2860	3.069	1.958
0.0238	0.0049	61.6	38.93	0.5352	0.9424	410	37837.2	2560	3.062	1.948
0.0394	-0.0263	61.98	36.85	0.3689	0.9595	411	37838.2	2860	3.054	1.941
0.0114	-0.0697	61.65	35.69	0.4421	0.9351	412	37839.2	2880	3.059	1.948
0.0167	-0.072	61.84	38.14	0.4741	0.9399	413	37840.2	2920	3.069	1.958
0.0657	-0.064	61.41	36.43	0.5522	0.9546	414	37841.2	2680	3.057	1.934
0.0048	-0.0029	61.75	39.12	0.6057	0.9473	415	37842.2	2540	3.062	1.948
0.0429	-0.0552	61.51	36.94	0.3892	0.9277	416	37843.2	2680	3.069	1.951
0.0411	-0.0738	61.27	37.63	0.5962	0.9204	417	37844.2	2720	3.066	1.958
0.0534	-0.0521	61.18	38.84	0.5276	0.9424	418	37845.2	2460	3.083	1.953
0.0337	-0.0326	61.13	36.15	0.4473	0.9399	419	37846.2	2620	3.079	1.956
0.0497	-0.0394	61.08	37.17	0.4363	0.9424	420	37847.2	2500	3.064	1.96
0.0204	-0.0974	60.41	37.45	0.3582	0.9399	421	37848.2	2680	3.057	1.941
0.0405	-0.0961	60.46	36.43	0.5405	0.9424	422	37849.2	2860	3.071	1.956
0.0331	-0.0468	60.27	38.1	0.5603	0.9424	423	37850.2	2900	3.062	1.946
0.0521	-0.0767	60.27	39.53	0.5325	0.9351	424	37851.2	2940	3.059	1.946
0.021	-0.0365	59.79	37.91	0.3853	0.9424	425	37852.2	2780	3.071	1.948
0.0251	-0.0246	59.6	37.63	0.415	0.9302	426	37853.2	2920	3.076	1.958
0.0189	-0.0849	59.41	37.73	0.3054	0.9473	427	37854.2	2560	3.074	1.953
0.0169	-0.0564	59.32	39.39	0.3655	0.9473	428	37855.2	2400	3.064	1.941
0.0257	-0.0252	59.08	51.76	0.2896	1.1255	429	37856.2	2560	3.074	1.951
0.0452	-0.0341	59.32	59.54	0.4434	1.1328	430	37857.2	2600	3.088	1.968
0.0359	-0.0312	59.37	60.47	0.5671	1.145	431	37858.2	2520	3.108	1.97
0.0374	-0.0568	59.84	59.35	0.3538	1.1377	432	37859.2	2640	3.093	1.96
0.0652	-0.0332	59.75	59.08	0.2957	1.1548	433	37860.2	2480	3.074	1.943
0.081	-0.0111	60.03	57.04	0.5098	1.1377	434	37861.2	2580	3.101	1.98
0.0232	-0.0289	60.13	54.91	0.5452	1.0962	435	37862.2	2820	3.096	1.965
0.0181	-0.0841	60.08	53.1	0.5752	1.0913	436	37863.2	2940	3.103	1.963
0.0267	-0.0927	60.03	52.27	0.4761	1.0864	437	37864.2	2660	3.088	1.943
0.0374	-0.0427	60.51	52.82	0.6182	0.9937	438	37865.2	2940	3.103	1.958
0.0433	-0.0496	60.37	50.05	0.6223	1.062	439	37866.2	2620	3.103	1.956
0.0253	-0.0588	60.18	53.1	0.3872	1.0962	440	37867.2	2660	3.096	1.956
0.055	-0.0853	59.99	55.32	0.3887	1.0962	441	37868.2	2340	3.098	1.958
0.0113	-0.0461	59.51	53.84	0.4766	1.1011	442	37869.2	2500	3.086	1.948
0.0405	-0.0539	59.32	54.4	0.469	1.0986	443	37870.2	2540	3.108	1.956
0.0581	-0.022	58.75	55.97	0.427	1.0938	444	37871.2	2660	3.101	1.948
0.0571	-0.0134	58.56	55.97	0.3489	1.123	445	37872.2	2520	3.11	1.953
0.0677	-0.0625	58.51	70.79	0.282	1.2915	446	37873.2	2300	3.135	1.97
0.0624	-0.0326	58.46	72.41	0.3972	1.2842	447	37874.2	2740	3.113	1.965
0.0847	0.0379	58.8	71.72	0.5298	1.2817	448	37875.2	2780	3.12	1.968
0.0607	0.0246	58.75	72.74	0.5225	1.2793	449	37876.2	2400	3.123	1.968
0.0452	0.0196	59.27	66.25	0.595	1.1987	450	37877.2	2640	3.132	1.96
0.0739	0.0412	59.27	64.12	0.6296	1.2012	451	37878.2	2940	3.127	1.97
0.0544	0.0075	59.56	55.28	0.6194	1.1157	452	37879.2	2700	3.127	1.975
0.0404	0.0123	59.32	53.06	0.3328	1.0791	453	37880.2	2780	3.127	1.96
0.0587	-0.0021	59.56	48.56	0.4719	1.0303	454	37881.2	2560	3.11	1.953
0.0267	0.0241	59.65	46.99	0.6375	1.0059	455	37882.2	3060	3.118	1.943
0.0333	0.0256	59.56	48.01	0.2727	1.001	456	37883.2	2820	3.113	1.941
0.0407	0.0209	59.56	46.48	0.4038	0.9937	457	37884.2	2820	3.123	1.956
0.0396	0.0016	59.51	46.76	0.3655	0.9839	458	37885.2	2760	3.12	1.953
0.0296	0.0037	59.22	48.33	0.4973	0.9985	459	37886.2	2400	3.118	1.953
0.021	0.0633	59.18	45.92	0.4272	1.0034	460	37887.2	2620	3.11	1.931
0.0415	0.0481	58.8	47.41	0.4429	1.0107	461	37888.2	2640	3.12	1.956
0.0181	-0.0107	58.6	49.77	0.5874	1.001	462	37889.2	2420	3.113	1.946
0.0296	0.0063	58.22	47.96	0.4485	1.0229	463	37890.2	2480	3.118	1.953
0.0298	-0.0146	57.65	56.34	0.2595	1.1108	464	37891.2	2520	3.113	1.943
0.0751	0.0049	57.56	57.73	0.5105	1.1279	465	37892.2	2820	3.113	1.936
0.0491	0.0071	57.22	60.65	0.6045	1.1182	466	37893.2	2380	3.127	1.956
0.0532	0.0434	57.18	59.77	0.5408	1.1182	467	37894.2	2520	3.135	1.98
0.0394	0.0422	57.22	58.94	0.4695	1.1182	468	37895.2	2240	3.137	1.958
0.0673	0.0565	57.46	60.84	0.4077	1.1206	469	37896.2	2580	3.127	1.956
0.039	0.0543	57.7	72.55	0.2969	1.2915	470	37897.2	2520	3.142	1.96
0.0845	0.0555	58.08	73.2	0.2039	1.2988	471	37898.2	2800	3.147	1.965
0.0706	0.0293	58.89	73.25	0.4751	1.2988	472	37899.2	2580	3.159	1.963
0.0593	0.0594	59.6	71.26	0.4834	1.3013	473	37900.2	2580	3.149	1.968
0.0681	0.0952	60.56	68.06	0.6448	1.2354	474	37901.2	2460	3.164	1.97
0.0497	0.1129	60.84	62.23	0.6021	1.145	475	37902.2	2540	3.147	1.968
0.0421	0.051	61.56	58.89	0.4395	1.1328	476	37903.2	2640	3.142	1.951
0.0507	0.0348	62.03	54.72	0.4448	1.1157	477	37904.2	2720	3.142	1.958
0.0386	0.0762	62.51	50.51	0.4287	1.084	478	37905.2	2660	3.137	1.943
0.0275	0.0745	63.46	44.63	0.5188	1.0083	479	37906.2	2780	3.137	1.946
0.0538	0.0166	64.08	43.47	0.304	1.0181	480	37907.2	2820	3.13	1.946
0.0353	0.0381	64.6	42.22	0.2305	1.0034	481	37908.2	2980	3.132	1.946
0.0085	0.0153	64.89	39.25	0.3467	1.0156	482	37909.2	2540	3.13	1.946
-0.0018	-0.0004	65.03	39.67	0.6458	1.0132	483	37910.2	3160	3.137	1.936
0.0282	0.0418	65.32	41.94	0.6245	1.0132	484	37911.2	2880	3.137	1.96
0.0335	-0.0152	65.32	38.98	0.688	1.0034	485	37912.2	2920	3.142	1.951
0.0523	0.0321	65.27	38.42	0.4373	1.0156	486	37913.2	3140	3.13	1.931
0.0284	-0.0224	65.46	40.51	0.3936	0.9863	487	37914.2	2840	3.14	1.948
0.0282	-0.0365	65.36	38.24	0.5386	1.0034	488	37915.2	2480	3.123	1.931
0.0243	-0.0834	65.27	39.16	0.5669	0.9717	489	37916.2	3080	3.14	1.946
0.0304	-0.1435	64.6	35.83	0.5818	0.9668	490	37917.2	3060	3.125	1.929
0.0298	-0.0923	64.51	38.47	0.2363	0.9595	491	37918.2	2960	3.142	1.951
0.0155	-0.1402	64.27	38	0.4302	0.9717	492	37919.2	2900	3.132	1.941
0.0099	-0.1373	63.89	37.91	0.5032	0.979	493	37920.2	2940	3.142	1.948
0.0267	-0.0562	63.75	37.77	0.4722	0.9717	494	37921.2	2840	3.142	1.953
0.0333	-0.0974	63.51	29.02	0.5962	0.8179	495	37922.2	2940	3.149	1.946
0.0029	-0.0994	62.89	23.97	0.8269	0.7935	496	37923.2	2780	3.132	1.936
0.0109	-0.0779	62.18	24.06	0.1997	0.7983	497	37924.2	2920	3.118	1.921
0.02	-0.0515	61.65	32.82	0.054	0.9351	498	37925.2	2800	3.132	1.941
0.0271	-0.031	60.7	35.41	0.4956	0.9351	499	37926.2	2520	3.137	1.956
0.04	0.0098	60.56	46.8	0.4731	1.0596	500	37927.2	2720	3.167	1.958
0.0642	0.0086	60.13	54.77	0.7083	1.123	501	37928.2	2760	3.147	1.948
0.0603	-0.0209	59.22	55.14	0.4412	1.1133	502	37929.2	2520	3.142	1.946
0.0259	-0.0357	58.75	39.72	0.6992	0.9131	503	37930.2	2740	3.145	1.958

0.0402	0.0219	57.89	51.02	0.0154	1.0913	504	37931.2	2620	3.14	1.953
0.0657	0.0545	57.56	83.85	0.0684	1.5088	505	37932.2	2580	3.159	1.973
0.0552	0.1397	58.03	86.08	0.3025	1.6064	506	37933.2	2560	3.152	1.953
0.1138	0.1491	58.51	86.54	0.4319	1.604	507	37934.2	2560	3.167	1.963
0.0634	0.0496	58.75	85.1	0.4653	1.5869	508	37935.2	2660	3.181	1.97
0.0823	-0.0091	59.13	83.2	0.4658	1.5015	509	37936.2	2600	3.181	1.97
0.0671	0.0204	59.65	78.94	0.5881	1.3989	510	37937.2	2880	3.179	1.97
0.0712	0.035	59.51	73.02	0.3369	1.2964	511	37938.2	2480	3.169	1.965
0.0861	0.0227	59.84	72.69	0.3975	1.2866	512	37939.2	2440	3.169	1.958
0.0777	0.0858	60.27	71.63	0.5229	1.2671	513	37940.2	2800	3.174	1.968
0.0586	0.0594	60.41	68.85	0.6003	1.2451	514	37941.2	2760	3.179	1.96
0.0239	0.0465	60.27	56.02	0.6858	1.1255	515	37942.2	2660	3.186	1.953
0.0544	0.0516	60.65	56.99	0.2854	1.1157	516	37943.2	2420	3.169	1.958
0.0411	0.0164	60.7	57.18	0.3433	1.1255	517	37944.2	2480	3.174	1.953
0.0564	0.0071	60.84	59.72	0.282	1.145	518	37945.2	2660	3.186	1.96
0.0415	0.0145	61.27	57.55	0.4448	1.1353	519	37946.2	2460	3.176	1.948
0.0439	0.0356	61.94	47.78	0.7009	1.0596	520	37947.2	2720	3.162	1.931
0.0966	0.0159	61.96	47.54	0.5757	1.0425	521	37948.2	3080	3.181	1.943
0.0415	0.0653	61.96	46.57	0.6089	1.0425	522	37949.2	2700	3.176	1.946
0.0298	0.0348	62.51	48.24	0.4438	1.0547	523	37950.2	2740	3.174	1.941
0.0331	0.0416	62.6	47.36	0.3108	1.0474	524	37951.2	2660	3.157	1.919
0.0214	-0.048	62.7	48.98	0.3171	1.04	525	37952.2	2580	3.179	1.943
0.0343	-0.057	63.13	40.88	0.5518	0.9766	526	37953.2	2780	3.162	1.948
0.0036	0.0254	62.89	34.39	0.3376	0.9351	527	37954.2	3040	3.176	1.934
0.0212	0.0608	63.37	31.57	0.6343	0.8765	528	37955.2	2800	3.162	1.936
0.0327	-0.0179	63.18	25.22	0.7825	0.8228	529	37956.2	2820	3.152	1.926
0.0282	0.0258	62.98	24.85	0.0879	0.8228	530	37957.2	2820	3.162	1.931
0.0179	0.0287	63.08	22.77	0.4031	0.7007	531	37958.2	2720	3.157	1.934
0.0015	0.0243	62.79	21.61	0.5071	0.7446	532	37959.2	2840	3.159	1.919
0.0079	0.0204	62.6	22.07	0.0134	0.7642	533	37960.2	2640	3.157	1.921
-0.0028	0.0473	61.79	21.15	0.3005	0.7227	534	37961.2	2640	3.159	1.929
0.0071	0.0147	61.56	20.13	0.7942	0.7056	535	37962.2	2980	3.145	1.912
-0.0171	-0.0213	61.03	19.94	0.4763	0.6934	536	37963.2	2580	3.157	1.929
0.0236	-0.0357	60.27	21.19	0.1729	0.708	537	37964.2	2580	3.142	1.931
0.0032	-0.0681	59.41	20.45	0.5625	0.7104	538	37965.2	2460	3.13	1.924
-0.0483	-0.0252	58.37	23.05	0.7283	0.7007	539	37966.2	2620	3.132	1.921
-0.0688	-0.0234	55.84	22.12	0.3335	0.6885	540	37967.2	2400	3.147	1.924
-0.0788	-0.0271	53.37	25.59	0.4104	0.6982	541	37968.2	2220	3.13	1.917
-0.0559	-0.0539	51.65	25.41	0.3979	0.7007	542	37969.2	2300	3.132	1.919
-0.022	-0.0461	50.61	26.29	0.5579	0.708	543	37970.2	2220	3.113	1.921
-0.055	0.0276	48.65	27.03	0.3774	0.7104	544	37971.2	2120	3.137	1.926
-0.1032	0.0774	46.51	27.91	0.3145	0.6934	545	37972.2	2100	3.135	1.943
-0.0827	0.1014	44.04	29.21	0.4343	0.7031	546	37973.2	1640	3.135	1.931
-0.0903	0.0643	41.28	30.78	0.1001	0.6958	547	37974.2	1740	3.125	1.921
-0.1596	0.0172	38.42	31.2	0.0674	0.7056	548	37975.2	1660	3.132	1.931
-0.1784	0.036	34.71	30.59	0.7432	0.6982	549	37976.2	1680	3.137	1.931
-0.1962	0.0321	30.75	30.83	0.7473	0.6958	550	37977.2	1620	3.147	1.934
-0.213	0.0397	26.47	33.79	0.3242	0.7007	551	37978.2	1680	3.137	1.929
-0.1993	0.0184	21.99	37.12	0.0002	0.7007	552	37979.2	1460	3.113	1.919
-0.1772	-0.0515	18.38	40.09	0.0037	0.7104	553	37980.2	1260	3.123	1.926
-0.2009	-0.1263	14.33	34.95	0.0068	0.6958	554	37981.2	1400	3.132	1.941
-0.1923	-0.0525	9.33	43.79	0.5352	0.6982	555	37982.2	1340	3.125	1.941
-0.1167	-0.0023	5.28	40.09	0.8569	0.6982	556	37983.2	1040	3.137	1.931
0.0827	-0.0095	5.76	66.95	0.5366	1.1084	557	37984.2	1560	3.142	1.931
0.1929	-0.0488	8.14	62.32	0.3528	1.2231	558	37985.2	2260	3.14	1.948
0.1775	-0.0935	11	63.85	0.2024	1.3135	559	37986.2	2920	3.162	1.948
0.2001	-0.1101	14.14	67.64	0.2051	1.3867	560	37987.2	3060	3.171	1.948
0.1966	-0.0314	17.23	68.29	0.5286	1.4624	561	37988.2	3460	3.152	1.941
0.1827	0.0141	20.09	76.03	0.3591	1.5405	562	37989.2	3080	3.186	1.965
0.1849	0.0202	22.71	77.65	0.5183	1.5454	563	37990.2	3200	3.174	1.98
0.1779	0.0317	25.61	75.56	0.4658	1.5503	564	37991.2	3060	3.191	1.978
0.1511	0.051	27.71	74.68	0.5244	1.4941	565	37992.2	3420	3.198	1.98
0.1224	0.1016	29.52	72.69	0.6025	1.4795	566	37993.2	3100	3.191	1.965
0.1321	0.111	31.33	73.29	0.4321	1.4331	567	37994.2	2920	3.206	1.985
0.1154	0.1053	32.8	70.33	0.4226	1.377	568	37995.2	2760	3.193	1.995
0.1122	0.0618	34.13	70.79	0.5723	1.3892	569	37996.2	2860	3.191	1.97
0.1089	0.0901	35.18	70.05	0.4888	1.3501	570	37997.2	2960	3.191	1.956
0.0907	0.1166	36.32	61.25	0.385	1.2036	571	37998.2	2840	3.198	1.958
0.0755	0.0469	36.9	58.8	0.5894	1.1597	572	37999.2	2720	3.188	1.948
0.0671	0.0352	37.42	49.4	0.6057	1.0522	573	38000.2	2600	3.179	1.953
0.0695	0.0182	37.47	48.24	0.6042	1.0425	574	38001.2	2500	3.176	1.943
0.056	0.0444	37.61	49.95	0.4333	1.0547	575	38002.2	2780	3.171	1.919
0.0691	0.0135	37.99	47.54	0.2339	1.0718	576	38003.2	2900	3.179	1.919
0.0431	0.019	38.32	49.12	0.3481	1.0815	577	38004.2	2800	3.176	1.924
0.0708	0.0252	38.47	55.88	0.2363	1.0889	578	38005.2	2720	3.176	1.909
0.0657	0.0514	38.99	61.11	0.4841	1.1011	579	38006.2	2240	3.174	1.912
0.0823	0.0434	39.28	58.24	0.4927	1.1011	580	38007.2	2360	3.198	1.919
0.0693	0.0262	39.94	57.69	0.3391	1.0884	581	38008.2	2420	3.186	1.909
0.0708	0.0479	40.04	57.78	0.4224	1.0327	582	38009.2	2440	3.176	1.897
0.0306	-0.0295	40.37	40.13	0.6387	0.9277	583	38010.2	2440	3.179	1.892
0.037	0.0495	40.28	39.67	0.1145	0.9277	584	38011.2	2440	3.171	1.882
0.0306	0.0442	40.23	39.35	0.5413	0.9351	585	38012.2	2580	3.171	1.902
0.0405	0.0598	40.13	39.53	0.5632	0.9302	586	38013.2	2620	3.179	1.882
0.0575	0.0258	40.28	39.76	0.6099	0.9351	587	38014.2	2400	3.162	1.882
0.0486	0.0436	40.23	39.39	0.4849	0.9351	588	38015.2	2360	3.169	1.868
0.0343	0.0239	40.66	41.25	0.5408	0.9351	589	38016.2	2440	3.164	1.882
0.0226	0.0325	40.7	39.53	0.4441	0.9351	590	38017.2	2400	3.169	1.865
0.0468	0.0037	41.09	39.12	0.6895	0.9326	591	38018.2	2680	3.176	1.877
0.0446	0.0219	41.28	39.21	0.3708	0.9326	592	38019.2	2480	3.181	1.882
0.0325	0.0178	41.28	37.54	0.6897	0.9326	593	38020.2	2520	3.159	1.865
0.0304	-0.0373	41.37	38.1	0.4019	0.9351	594	38021.2	2220	3.169	1.875
0.038	-0.1	41.51	36.94	0.2976	0.9229	595	38022.2	2120	3.167	1.875
0.039	-0.1041	41.37	37.63	0.5588	0.9399	596	38023.2	2340	3.169	1.875
0.039	-0.0707	41.66	37.17	0.4741	0.9448	597	38024.2	2280	3.157	1.868
0.0484	-0.0242	41.61	38.1	0.373	0.9351	598	38025.2	2780	3.171	1.89
0.03	0.0034	41.28	38.61	0.4321	0.9351	599	38026.2	2540	3.162	1.88
0.0247	0.0266	41.04	36.43	0.6689	0.8423	600	38027.2	2300	3.176	1.882
0.0263	0.0536	40.8	31.85	0.5225	0.835	601	38028.2	2420	3.162	1.873
0.021	0.0379	40.7	33.84	0.4749	0.8301	602	38029.2	2380	3.147	1.873
0.0357	0.0258	40.28	32.08	0.2056	0.8252	603	38030.2	2380	3.171	1.877
0.0353	0.0268	39.94	31.1	0.1853	0.8276	604	38031.2	2400	3.181	1.882
0.0214	0.0151	39.94	29.99	0.6243	0.7446	605	38032.2	2540	3.142	1.868

0.0218	0.0016	39.47	25.08	0.8003	0.7397	606	38033.2	2620	3.152	1.868
0.0187	-0.0173	38.99	31.8	0.02	0.7324	607	38034.2	1980	3.162	1.87
0.0314	0.0129	38.99	30.59	0.0222	0.769	608	38035.2	1800	3.147	1.868
0.0253	0.0211	38.75	27.35	0.668	0.7861	609	38036.2	2540	3.152	1.877
0.0351	0.0344	38.42	30.64	0.3145	0.8276	610	38037.2	2460	3.147	1.875
0.0255	0.0164	38.56	30.55	0.3125	0.8105	611	38038.2	2360	3.137	1.853
0.0228	0.0485	38.56	30.22	0.5413	0.8154	612	38039.2	2520	3.152	1.873
0.0343	0.0018	38.42	30.69	0.7134	0.7959	613	38040.2	2180	3.152	1.868
0.0249	0.0219	38.56	30.78	0.3687	0.8154	614	38041.2	2380	3.157	1.868
0.0427	0.0487	38.32	35.27	0.3	0.9253	615	38042.2	2540	3.154	1.875
0.0517	0.0305	38.37	39.12	0.5042	0.9155	616	38043.2	2360	3.145	1.877
0.0349	0.0553	38.8	40.64	0.7834	0.9082	617	38044.2	2340	3.152	1.882
0.0441	0.0516	38.9	40.41	0.5498	0.896	618	38045.2	2380	3.149	1.868
0.0443	0.0301	39.28	38.56	0.5476	0.9326	619	38046.2	2000	3.147	1.875
0.0339	0.0221	39.28	41.11	0.229	0.9399	620	38047.2	2460	3.171	1.892
0.0439	0.0315	39.37	46.06	0.6465	0.9839	621	38048.2	2440	3.179	1.899
0.0685	0.0375	39.51	47.36	0.5713	0.9741	622	38049.2	2540	3.171	1.89
0.0521	-0.0013	39.8	44.95	0.3591	0.9937	623	38050.2	2540	3.171	1.895
0.0648	0.0481	40.28	44.63	0.2048	0.9937	624	38051.2	2200	3.167	1.892
0.0636	0.0524	40.23	44.95	0.4177	0.9839	625	38052.2	2540	3.159	1.882
0.0499	0.0256	40.61	41.89	0.5276	0.9717	626	38053.2	2600	3.171	1.897
0.0611	0.0256	40.56	42.91	0.3135	0.9473	627	38054.2	2340	3.171	1.89
0.0558	0.0743	40.8	40.88	0.333	0.9692	628	38055.2	2720	3.171	1.895
0.0302	0.051	40.99	41.34	0.3247	0.9619	629	38056.2	2480	3.162	1.885
0.0534	0.0485	41.09	42.91	0.6313	0.9546	630	38057.2	2640	3.171	1.909
0.0509	0.0334	41.18	37.31	0.582	0.9204	631	38058.2	2520	3.167	1.907
0.0372	0.0166	41.04	27.86	0.7573	0.8032	632	38059.2	2340	3.159	1.887
0.0202	0.0446	40.7	27.72	0.5659	0.8154	633	38060.2	2540	3.167	1.887
0.0048	0.058	40.28	34.39	0.0056	0.9106	634	38061.2	2360	3.142	1.882
0.0503	0.0317	40.32	36.62	0.3657	0.8936	635	38062.2	2400	3.171	1.892
0.0376	0.0598	40.51	36.38	0.4316	0.9058	636	38063.2	2560	3.157	1.887
0.0282	0.0524	40.66	35.5	0.4348	0.9058	637	38064.2	2540	3.162	1.897
0.0386	0.0262	40.7	36.15	0.3752	0.896	638	38065.2	2460	3.157	1.887
0.0327	0.044	40.47	35.74	0.4448	0.8789	639	38066.2	2560	3.152	1.882
0.0355	0.0473	40.32	32.73	0.7031	0.8911	640	38067.2	2380	3.171	1.902
0.0368	0.0465	40.42	33	0.429	0.8594	641	38068.2	2280	3.167	1.897
0.0509	0.0139	40.13	31.89	0.5247	0.8545	642	38069.2	2540	3.159	1.907
0.0435	0.0293	40.13	33.28	0.5444	0.8374	643	38070.2	2500	3.159	1.895
0.0314	-0.0048	39.94	29.95	0.2979	0.8594	644	38071.2	2480	3.162	1.912
0.0281	0.0286	39.8	31.52	0.4644	0.835	645	38072.2	2260	3.162	1.902
0.0282	0.077	39.85	31.98	0.4663	0.8545	646	38073.2	2440	3.149	1.897
0.0234	0.1082	39.56	32.08	0.4834	0.8472	647	38074.2	2520	3.159	1.902
0.0333	0.1766	39.51	32.03	0.3413	0.8594	648	38075.2	2180	3.145	1.887
0.0388	0.2088	39.37	33.28	0.3564	0.8447	649	38076.2	2660	3.164	1.902
0.0374	0.2055	39.28	32.31	0.604	0.8423	650	38077.2	2280	3.159	1.902
0.0304	0.1821	38.99	32.77	0.4639	0.8521	651	38078.2	2320	3.157	1.907
0.0321	0.1762	38.8	33.37	0.5581	0.8496	652	38079.2	2280	3.152	1.899
0.0417	0.1157	38.94	35.6	0.2712	0.8662	653	38080.2	2320	3.149	1.907
0.0308	0.0213	38.85	37.4	0.5349	0.874	654	38081.2	2380	3.162	1.902
0.0282	0.0061	39.18	35.13	0.7617	0.9204	655	38082.2	2180	3.152	1.909
0.0515	0.0274	39.18	38.84	0.5164	0.9082	656	38083.2	2600	3.167	1.917
0.021	0.0194	39.09	33.37	0.7356	0.8179	657	38084.2	2300	3.142	1.897
0.04	-0.0041	38.8	31.34	0.4807	0.8325	658	38085.2	2380	3.149	1.912
0.0157	-0.0496	38.7	28.51	0.572	0.7837	659	38086.2	2280	3.159	1.914
0.0296	-0.09	38.32	29.07	0.3569	0.7715	660	38087.2	2480	3.145	1.902
0.0323	-0.0841	37.8	36.43	0.3115	0.9155	661	38088.2	2420	3.137	1.89
0.0421	-0.0211	37.99	43.05	0.4729	0.9521	662	38089.2	2420	3.147	1.902
0.0544	0.0137	38.04	45.69	0.7598	0.9937	663	38090.2	2120	3.179	1.929
0.0571	0.0225	38.23	50.74	0.3525	1.0107	664	38091.2	2320	3.162	1.921
0.0517	-0.0015	39.09	48.38	0.2844	1.0181	665	38092.2	2300	3.174	1.924
0.0384	0.0176	39.37	45.51	0.4915	0.9912	666	38093.2	2380	3.152	1.912
0.0433	0.0303	39.66	42.17	0.7456	0.957	667	38094.2	2520	3.162	1.929
0.0425	0.0188	39.75	40.92	0.3696	0.9351	668	38095.2	2420	3.167	1.931
0.0404	0.0092	39.8	41.34	0.4001	0.9009	669	38096.2	2300	3.176	1.931
0.0632	-0.0185	39.85	38.56	0.7048	0.8667	670	38097.2	2300	3.152	1.907
0.0292	-0.0086	39.8	36.75	0.2219	0.8643	671	38098.2	2340	3.171	1.929
0.0364	0.0317	39.56	35.87	0.2368	0.8667	672	38099.2	2180	3.167	1.931
0.0286	0.0444	39.37	34.21	0.6912	0.8521	673	38100.2	2400	3.171	1.931
0.0363	0.0289	39.37	34.86	0.3022	0.8472	674	38101.2	2660	3.167	1.936
0.0417	0.0241	39.28	34.58	0.5354	0.8447	675	38102.2	2240	3.159	1.919
0.0398	0.1014	39.09	34.3	0.5151	0.8325	676	38103.2	2280	3.167	1.931
0.0409	0.1389	38.7	34.95	0.3347	0.835	677	38104.2	2320	3.171	1.926
0.0329	0.1766	38.8	34.99	0.5347	0.8423	678	38105.2	2540	3.174	1.956
0.0232	0.1672	38.42	35.5	0.6738	0.8472	679	38106.2	2240	3.162	1.926
0.0366	0.1389	38.7	37.54	0.6138	0.8447	680	38107.2	2200	3.157	1.924
0.0243	0.1311	38.32	37.45	0.5674	0.8447	681	38108.2	2440	3.162	1.929
0.047	0.1362	38.32	36.57	0.5693	0.835	682	38109.2	2080	3.159	1.929
0.0396	0.1661	38.28	35.6	0.2993	0.8447	683	38110.2	2320	3.167	1.938
0.0339	0.17	38.32	37.22	0.5527	0.8374	684	38111.2	2760	3.142	1.917
0.0437	0.1659	38.23	35.36	0.3865	0.8423	685	38112.2	2420	3.164	1.936
0.037	0.1592	38.37	36.43	0.4143	0.8252	686	38113.2	2300	3.159	1.936
0.0249	0.1662	38.23	35.78	0.6411	0.8618	687	38114.2	2420	3.159	1.931
0.037	0.1662	38.56	35.69	0.479	0.8569	688	38115.2	2080	3.164	1.936
0.0355	0.1795	38.56	35.83	0.4902	0.8545	689	38116.2	2300	3.159	1.936
0.0321	0.1641	38.61	37.12	0.313	0.8594	690	38117.2	2320	3.152	1.931
0.045	0.1467	38.42	35.55	0.3728	0.8252	691	38118.2	2420	3.169	1.938
0.0212	0.0889	38.75	34.35	0.4729	0.8496	692	38119.2	2180	3.179	1.951
0.0372	0.0069	38.9	35.46	0.4658	0.8423	693	38120.2	2200	3.162	1.931
0.0357	-0.0117	39.09	35.87	0.7288	0.8423	694	38121.2	2560	3.167	1.951
0.0499	-0.0023	39.04	34.21	0.4907	0.835	695	38122.2	2620	3.169	1.943
0.0445	-0.0714	39.28	36.38	0.4114	0.8472	696	38123.2	2300	3.167	1.953
0.023	-0.1148	39.23	34.39	0.5605	0.8472	697	38124.2	2320	3.167	1.946
0.0321	-0.1156	38.8	35.69	0.5532	0.8496	698	38125.2	2600	3.169	1.938
0.0411	-0.1209	38.8	35.55	0.2866	0.8374	699	38126.2	2380	3.181	1.951
0.0267	-0.131	38.61	34.95	0.623	0.8374	700	38127.2	2500	3.169	1.96
0.0286	-0.1404	38.28	38.14	0.553	0.8643	701	38128.2	2400	3.159	1.948
0.0267	-0.1306	38.13	33.37	0.2695	0.8374	702	38129.2	2520	3.167	1.938
0.0093	-0.1033	38.04	34.16	0.1787	0.8423	703	38130.2	2300	3.154	1.941
0.0286	-0.1119	37.71	33.74	0.759	0.835	704	38131.2	2440	3.157	1.938
0.0448	-0.1007	37.42	35.83	0.5947	0.8618	705	38132.2	2040	3.162	1.951
0.0472	-0.0082	37.28	37.08	0.4702	0.8862	706	38133.2	2200	3.169	1.951
0.0446	0.0223	37.61	39.63	0.5505	0.918	707	38134.2	2240	3.164	1.941

0.0339	0.0014	37.42	42.31	0.6995	0.9204	708	38135.2	2260	3.152	1.938
0.0501	0.0045	37.42	40	0.6375	0.9106	709	38136.2	2240	3.164	1.953
0.046	0.0313	37.66	39.95	0.5894	0.9277	710	38137.2	2160	3.164	1.963
0.0292	0.0471	37.66	40.32	0.6077	0.9351	711	38138.2	2180	3.149	1.934
0.0534	0.0266	37.56	39.21	0.5869	0.9302	712	38139.2	2220	3.164	1.948
0.0484	0.0116	37.42	39.25	0.5415	0.9131	713	38140.2	2120	3.167	1.948
0.0341	0.0139	37.37	38.75	0.5842	0.9204	714	38141.2	2260	3.167	1.951
0.053	0.0141	37.8	38.98	0.6597	0.9155	715	38142.2	2300	3.167	1.951
0.0359	0.0284	37.94	39.44	0.5859	0.9253	716	38143.2	2300	3.154	1.931
0.0304	0.0315	37.8	24.3	0.7798	0.7031	717	38144.2	2160	3.159	1.941
0.0019	0.0184	36.9	31.43	0.3347	0.6885	718	38145.2	2020	3.152	1.938
-0.0405	0.0284	35.56	36.15	0.0034	0.6982	719	38146.2	1540	3.157	1.946
-0.0747	0.0145	33.56	33.1	0.0117	0.6982	720	38147.2	1320	3.14	1.926
-0.0956	0.0317	31.37	32.17	0.0652	0.6909	721	38148.2	1560	3.152	1.936
-0.122	0.034	27.95	36.62	0.2075	0.6982	722	38149.2	1560	3.162	1.941
-0.1409	0.0329	24.09	34.44	-0.0022	0.6909	723	38150.2	1360	3.159	1.938
-0.1417	0.0245	20.71	35.74	0.2974	0.6982	724	38151.2	1460	3.157	1.936
-0.1452	0.0102	17.04	38.1	0.1775	0.6934	725	38152.2	1200	3.14	1.924
-0.1552	0.0266	13.09	35.97	0.4856	0.7007	726	38153.2	1500	3.157	1.931
-0.1782	0.026	8.66	42.36	0.8022	0.6958	727	38154.2	1360	3.149	1.941
-0.1679	0.035	4.33	41.06	0.8416	0.6982	728	38155.2	1240	3.149	1.929
0.1038	0.0332	4.95	77.09	0.4988	1.3159	729	38156.2	1340	3.193	1.96
0.2861	0.0256	9.95	76.63	0.2517	1.5723	730	38157.2	2760	3.176	1.948
0.2874	0.0264	14.61	72.6	0.4739	1.5625	731	38158.2	4720	3.186	1.953
0.2468	0.0274	18.95	72.51	0.5857	1.6016	732	38159.2	3720	3.203	1.968
0.214	0.0512	21.99	78.57	0.3809	1.6162	733	38160.2	3420	3.21	1.968
0.1863	0.0381	25.42	78.39	0.415	1.6138	734	38161.2	3260	3.176	1.941
0.1665	0.0354	27.85	78.43	0.4968	1.5918	735	38162.2	3500	3.201	1.978
0.1327	0.0397	30.04	73.76	0.4861	1.521	736	38163.2	3400	3.21	1.968
0.1323	0.0284	32.14	76.49	0.3816	1.4868	737	38164.2	3000	3.215	1.978
0.1105	0.0184	33.66	63.8	0.2161	1.1841	738	38165.2	2920	3.196	1.97
0.0695	0.0405	34.42	54.95	0.2693	1.0571	739	38166.2	2680	3.179	1.956
0.0568	0.0287	35.13	48.89	0.7266	0.9839	740	38167.2	2520	3.196	1.956
0.0484	0.0151	35.28	43.79	0.4375	0.9497	741	38168.2	2420	3.164	1.941
0.0402	0.0217	35.61	41.89	0.1968	0.9473	742	38169.2	2540	3.169	1.938
0.0536	0.0235	35.56	40.88	0.3557	0.9497	743	38170.2	2580	3.162	1.924
0.0525	0.0162	35.71	42.5	0.3955	0.9521	744	38171.2	2360	3.167	1.917
0.04	0.0162	35.85	41.8	0.375	0.9521	745	38172.2	2480	3.169	1.926
0.0527	0.0221	36.13	41.43	0.3098	0.9497	746	38173.2	2220	3.169	1.919
0.0321	0.0354	36.51	40.69	0.1072	0.9424	747	38174.2	2620	3.167	1.917
0.0519	0.017	36.32	39.63	0.6484	0.957	748	38175.2	2500	3.162	1.895
0.0386	0.0438	36.37	43.1	0.4995	1.0034	749	38176.2	2300	3.162	1.909
0.0431	0.0276	36.28	41.57	0.7046	0.9937	750	38177.2	2520	3.181	1.907
0.0542	0.0159	36.8	43.28	0.5859	0.9961	751	38178.2	2640	3.184	1.902
0.0489	0.0323	36.85	42.36	0.6196	1.0059	752	38179.2	2560	3.154	1.88
0.0552	0.0104	37.13	41.39	0.5796	1.0059	753	38180.2	2660	3.174	1.912
0.053	0.011	37.51	42.68	0.5403	0.9985	754	38181.2	2820	3.179	1.885
0.0695	0.0225	38.04	50.46	0.3701	1.0107	755	38182.2	2260	3.257	1.919
0.0554	0.0227	38.56	48.89	0.6519	1.0034	756	38183.2	2260	3.193	1.907
0.0667	0.0317	38.66	47.41	0.6331	0.9985	757	38184.2	2660	3.176	1.902
0.0491	0.0338	39.09	47.04	0.4893	0.9863	758	38185.2	2940	3.186	1.907
0.0544	0.01	39.13	41.01	0.6436	0.9448	759	38186.2	2460	3.186	1.89
0.0384	0.0348	39.13	44.21	0.2932	0.957	760	38187.2	2420	3.171	1.902
0.0388	0.0231	39.51	42.08	0.291	0.9546	761	38188.2	2420	3.171	1.873
0.0532	0.0385	39.47	41.06	0.364	0.9448	762	38189.2	2480	3.176	1.899
0.0536	0.0325	39.18	39.72	0.2925	0.9302	763	38190.2	2420	3.171	1.882
0.0622	0.0149	39.13	40.41	0.2444	0.9351	764	38191.2	2320	3.181	1.892
0.0484	0.0176	39.32	41.2	0.3665	0.9229	765	38192.2	2160	3.181	1.882
0.0513	0.0233	39.37	40.88	0.5403	0.9009	766	38193.2	2380	3.162	1.87
0.0417	0.0155	39.56	38.14	0.303	0.8862	767	38194.2	2380	3.179	1.887
0.0366	0.0485	39.56	36.48	0.5752	0.8374	768	38195.2	2380	3.171	1.885
0.0238	0.0512	39.23	24.99	0.812	0.7373	769	38196.2	2380	3.159	1.875
0.02	0.0272	38.8	27.86	0.26	0.7373	770	38197.2	2340	3.167	1.87
0.0232	-0.0011	38.61	29.62	0.0278	0.7275	771	38198.2	2040	3.169	1.87
0.0044	0.0149	38.28	28	0.3586	0.7129	772	38199.2	1860	3.159	1.87
0.0142	0.0096	37.75	29.53	0.4985	0.7178	773	38200.2	2040	3.159	1.87
0.0228	0.0125	37.09	29.62	0.1082	0.7275	774	38201.2	2000	3.162	1.875
0.0152	0.0223	36.8	29.39	0.4849	0.73	775	38202.2	1880	3.149	1.863
0.0124	0.026	36.28	30.32	0.6614	0.7349	776	38203.2	1860	3.169	1.873
0.0144	0.0243	35.75	28.74	0.6287	0.7031	777	38204.2	1940	3.157	1.868
0.0279	0.0418	35.37	30.55	0.1777	0.7153	778	38205.2	1820	3.176	1.88
0.0144	0.0725	34.71	31.2	0.0532	0.7104	779	38206.2	1620	3.157	1.868
-0.0032	0.1268	33.94	31.01	0.6387	0.7056	780	38207.2	1700	3.152	1.863
-0.0348	0.1221	32.47	31.24	0.2183	0.7056	781	38208.2	1720	3.164	1.873
-0.0733	0.0967	29.85	30.78	0.6125	0.7007	782	38209.2	1680	3.157	1.877
-0.113	0.062	27.04	30.69	0.6145	0.6982	783	38210.2	1680	3.162	1.87
-0.128	0.053	23.76	33.84	0.012	0.7104	784	38211.2	1540	3.142	1.863
-0.121	-0.0369	20.42	37.54	0.1372	0.7007	785	38212.2	1360	3.157	1.87
-0.136	-0.2187	17.23	40	-0.0032	0.708	786	38213.2	1300	3.159	1.875
-0.0345	-0.3404	16.76	39.86	0.0149	0.8472	787	38214.2	1540	3.157	1.873
-0.0163	-0.3888	17	52.5	0.3491	0.9546	788	38215.2	1940	3.176	1.89
0.0282	-0.3017	17.66	63.11	0.564	1.1182	789	38216.2	2020	3.169	1.882
0.0859	-0.1726	18.8	59.4	0.5398	1.1304	790	38217.2	2600	3.191	1.899
0.1003	-0.1283	19.85	58.66	0.3608	1.1304	791	38218.2	2440	3.196	1.899
0.0954	-0.1255	21.04	57.59	0.4316	1.145	792	38219.2	2440	3.193	1.902
0.1118	-0.1289	22.42	56.76	0.4333	1.1401	793	38220.2	2600	3.191	1.895
0.0833	-0.1705	23.18	57.55	0.3633	1.145	794	38221.2	2920	3.206	1.909
0.0675	-0.1416	23.95	61.16	0.4965	1.1499	795	38222.2	2760	3.196	1.912
0.0849	-0.0937	24.8	61.95	0.5359	1.1011	796	38223.2	2640	3.201	1.912
0.0864	-0.0144	25.52	47.54	0.5798	0.7446	797	38224.2	2420	3.188	1.912
0.0378	0.0061	25.76	36.62	0.418	0.7202	798	38225.2	1760	3.167	1.885
0.0159	0.0016	25.09	34.3	0.449	0.7349	799	38226.2	1640	3.171	1.892
-0.0608	0.0139	23.47	35.23	0.3909	0.6812	800	38227.2	1360	3.171	1.902
-0.1001	0.0088	20.85	36.8	0.0337	0.6982	801	38228.2	1400	3.171	1.897
-0.1266	0.1805	17.76	38.7	0.4316	0.7031	802	38229.2	1320	3.157	1.882
-0.0569	0.3332	15.71	36.62	0.0581	0.7056	803	38230.2	1580	3.188	1.902
0.013	0.3186	16.14	55.23	0.3604	1.0156	804	38231.2	1920	3.203	1.931
0.0804	0.3313	16.9	59.59	0.5505	1.1499	805	38232.2	2420	3.196	1.912
0.0948	0.1741	18.14	58.66	0.3203	1.1597	806	38233.2	2400	3.193	1.912
0.114	0.0305	19.09	60.14	0.4182	1.1621	807	38234.2	2540	3.188	1.902
0.1136	0.0108	20.28	57.83	0.5129	1.1304	808	38235.2	2740	3.206	1.909
0.0556	0.0467	20.47	35.83	0.7478	0.7178	809	38236.2	2320	3.179	1.887

0.0368	0.0504	20.14	32.73	0.4331	0.7031	810	38237.2	2400	3.176	1.875
-0.0749	-0.0027	18.14	30.87	0.7288	0.6982	811	38238.2	1880	3.149	1.868
-0.1522	-0.2589	14.81	34.72	0.0083	0.7056	812	38239.2	1500	3.154	1.868
-0.0554	-0.3338	13.81	40.88	0.0291	0.8374	813	38240.2	1500	3.179	1.873
-0.0003	-0.3197	14.43	57.73	0.387	0.9937	814	38241.2	1760	3.206	1.904
0.088	-0.1394	15.52	63.34	0.4626	1.1499	815	38242.2	2360	3.208	1.902
0.1435	0.0051	17.47	68.06	0.262	1.2378	816	38243.2	2500	3.196	1.895
0.1314	0.0159	19.52	65.33	0.4773	1.2402	817	38244.2	2780	3.201	1.897
0.1343	-0.0004	21.28	61.11	0.562	1.1377	818	38245.2	2820	3.201	1.892
0.0989	0.0246	22.52	51.48	0.3625	1.0205	819	38246.2	2740	3.201	1.882
0.0726	-0.0029	22.95	44.63	0.7439	0.9497	820	38247.2	2520	3.176	1.863
0.073	-0.0058	23.76	44.02	0.2637	0.73	821	38248.2	1980	3.186	1.863
0.0388	0.0094	23.76	35.13	0.3694	0.7056	822	38249.2	1600	3.162	1.865
0.0277	0.0243	23.57	33.65	0.7092	0.7056	823	38250.2	1420	3.171	1.853
0.0099	0.0278	23.14	34.39	0.6172	0.6982	824	38251.2	1520	3.181	1.855
-0.0288	0.0379	21.95	34.81	0.4365	0.7104	825	38252.2	1520	3.152	1.829
-0.0507	0.01	20.8	36.24	0.2285	0.7056	826	38253.2	1420	3.171	1.841
-0.0993	0.11	18.04	40.04	0.167	0.6885	827	38254.2	1200	3.176	1.848
-0.0589	0.2381	15.95	37.45	0.4041	0.708	828	38255.2	1400	3.179	1.848
-0.0044	0.295	15.71	35.23	0.457	0.708	829	38256.2	1380	3.176	1.848
0.0075	0.3405	15.52	56.99	0.509	1.0205	830	38257.2	2120	3.196	1.858
0.0625	0.2409	16.47	61.99	0.6121	1.1743	831	38258.2	2540	3.196	1.86
0.1271	0.0467	17.66	67.6	0.2568	1.2744	832	38259.2	2800	3.206	1.863
0.1388	0.0348	19.14	67.27	0.3477	1.3354	833	38260.2	2780	3.203	1.858
0.164	0.0108	20.95	67.69	0.3696	1.3599	834	38261.2	2980	3.188	1.843
0.1548	0.0159	22.95	67.41	0.6064	1.3623	835	38262.2	3060	3.21	1.865
0.1548	0.0164	24.47	62.6	0.5039	1.2451	836	38263.2	2880	3.21	1.855
0.1189	0.0362	25.42	53.38	0.2976	1.0303	837	38264.2	2600	3.203	1.855
0.0788	0.0278	26.14	56.02	0.6218	1.0425	838	38265.2	2380	3.196	1.843
0.0663	0.0262	26.85	49.95	0.7178	0.9009	839	38266.2	2080	3.186	1.833
0.0454	0.0321	26.99	46.53	0.3787	0.8545	840	38267.2	1760	3.191	1.833
0.0603	0.036	27.37	45.14	0.0334	0.8521	841	38268.2	1960	3.191	1.841
0.0501	0.0305	27.61	45.14	0.5063	0.8667	842	38269.2	1940	3.191	1.833
0.0388	0.0211	27.52	33.19	0.7905	0.7178	843	38270.2	1940	3.167	1.802
0.0386	0.026	26.95	32.91	0.6055	0.708	844	38271.2	1880	3.171	1.804
0.0212	0.0202	26.61	33.47	-0.0125	0.7129	845	38272.2	1620	3.188	1.821
0.0077	0.0198	26.04	34.72	0.0303	0.7007	846	38273.2	1480	3.171	1.802
-0.0518	0.0254	24.23	35.23	0.0737	0.6982	847	38274.2	1360	3.181	1.802
-0.0948	-0.0166	21.57	36.71	0.0579	0.7104	848	38275.2	1620	3.152	1.782
-0.1223	-0.1955	18.33	39.39	0.2358	0.7007	849	38276.2	1460	3.181	1.797
-0.1889	-0.3537	14.28	35.23	0.5256	0.6934	850	38277.2	1460	3.171	1.799
-0.1137	-0.2529	11.52	40.09	0.6401	0.7007	851	38278.2	1140	3.171	1.792
-0.0669	-0.2123	10.33	43.05	0.5994	0.7056	852	38279.2	1100	3.152	1.78
-0.0987	-0.0734	8.14	37.63	0.8186	0.7056	853	38280.2	1300	3.171	1.809
-0.0723	0.0758	5.86	41.01	0.6069	0.7007	854	38281.2	1420	3.171	1.782
-0.0102	0.05	4.62	43.89	0.783	0.7129	855	38282.2	1240	3.176	1.787
-0.0493	0.0131	3.09	45.32	0.6777	0.7031	856	38283.2	1200	3.171	1.792
-0.087	0.028	-0.1	46.71	0.2922	0.6958	857	38284.2	1080	3.159	1.772
0.0177	0.036	-0.1	48.61	0.0457	0.6958	858	38285.2	1000	3.174	1.78
0.0329	0.0391	-0.1	44.02	0.0413	0.6885	859	38286.2	980	3.174	1.782
0.0304	0.0409	-0.05	42.96	0.0281	0.6982	860	38287.2	1080	3.181	1.78
0.0312	0.0399	-0.05	43.14	0.6672	0.7007	861	38288.2	1080	3.169	1.758
0.0288	0.0373	-0.1	42.08	0.323	0.7056	862	38289.2	940	3.162	1.78
0.0288	0.0411	0	42.17	0.6033	0.7007	863	38290.2	1040	3.181	1.775
0.032	0.0409	0	44.21	0.7166	0.7007	864	38291.2	1060	3.171	1.78
0.0284	0.037	-0.05	43.47	0.6367	0.7104	865	38292.2	980	3.171	1.777
0.0282	0.0393	-0.05	43.05	0.3628	0.7056	866	38293.2	1240	3.162	1.76
0.0298	0.0391	-0.05	44.21	0.509	0.6982	867	38294.2	1040	3.167	1.763
0.0304	0.0391	-0.1	46.8	0.4265	0.686	868	38295.2	920	3.171	1.763
0.0308	0.0368	-0.05	45	0.6406	0.7153	869	38296.2	900	3.169	1.763
0.0312	0.0416	-0.05	44.02	0.5415	0.7007	870	38297.2	900	3.174	1.768

FILE 07207T.PRN
(FIRST 100 RECORDS)

SIERRA RESEARCH
ALLGAS
The time is 10:21:37.98
The date is 7-20-1993.

CUMTIME SECONDS	THROT 4H SECONDS
37427.2	0.7031
37427.45	0.7007
37427.7	0.7056
37427.95	0.6885
37428.2	0.6812
37428.45	0.6958
37428.7	0.708
37428.95	0.7007
37429.2	0.7104
37429.45	0.6934
37429.7	0.7056
37429.95	0.6421
37430.2	0.7031
37430.45	0.7056
37430.7	0.7007
37430.95	0.7007
37431.2	0.7007
37431.45	0.6958
37431.7	0.7007
37431.95	0.7031
37432.2	0.6616
37432.45	0.6885
37432.7	0.708
37432.95	0.6885
37433.2	0.6885
37433.45	0.6982
37433.7	0.7031
37433.95	0.6982
37434.2	0.6982
37434.45	0.7056
37434.7	0.7129
37434.95	0.6982
37435.2	0.7031
37435.45	0.6982
37435.7	0.7031
37435.95	0.7056
37436.2	0.6982
37436.45	0.7031
37436.7	0.7031
37436.95	0.6885
37437.2	0.6885
37437.45	0.7568
37437.7	0.7251
37437.95	0.708
37438.2	0.9302

37438.45	0.9399
37438.7	0.9619
37438.95	0.9814
37439.2	1.0962
37439.45	1.2744
37439.7	1.3013
37439.95	1.311
37440.2	1.3232
37440.45	1.3208
37440.7	1.3159
37440.95	1.3208
37441.2	1.3159
37441.45	1.2842
37441.7	1.3013
37441.95	1.2427
37442.2	1.2329
37442.45	1.0889
37442.7	1.1499
37442.95	1.1548
37443.2	1.1157
37443.45	1.0962
37443.7	1.0254
37443.95	0.9961
37444.2	0.9644
37444.45	0.9595
37444.7	0.9229
37444.95	0.9229
37445.2	0.835
37445.45	0.769
37445.7	0.7031
37445.95	0.6934
37446.2	0.6958
37446.45	0.6934
37446.7	0.708
37446.95	0.7031
37447.2	0.7056
37447.45	0.7007
37447.7	0.7153
37447.95	0.6982
37448.2	0.7056
37448.45	0.7031
37448.7	0.6958
37448.95	0.6958
37449.2	0.7056
37449.45	0.7031
37449.7	0.7153
37449.95	0.7056
37450.2	0.7031
37450.45	0.6982

FILE 072086.DOT

HC PPM	CO %	CO_2 %	~~A/F~~ O_2 %	—	—	A/F
0	0	0.1	21.7	9054	109	0
1	0	1.6	21.7	9054	103	0
1	0	2.9	21.7	9048	103	0
2	0	6.4	21.7	9048	105	0
3	0	11.2	21.7	9054	104	0
4	0.01	14	20	9054	104	0
3	0.01	14.3	17	9054	104	0
3	0.01	14.4	13.8	9048	105	24.2
3	0	14.4	10.9	9048	104	22.19
3	0	14.4	8.8	9054	104	20.73
3	0	14.4	7.4	9048	104	19.75
3	0	14.4	6.5	9048	104	19.12
3	0	14.4	5.9	9054	104	18.7
3	0	14.4	5.7	9054	105	18.57
4	0	14.3	5.4	9054	99	18.38
5	0.01	14.2	5.1	9048	103	18.19
6	0.01	13.6	4.9	9054	105	18.2
7	0.01	13.4	4.8	9054	104	18.17
8	0.01	13.4	4.7	9048	106	18.1
7	0.01	13.7	4.7	9048	104	18.03
8	0.01	13.9	4.8	9048	104	18.04
7	0.01	13.8	4.8	9054	104	18.07
7	0.01	13.7	4.7	9054	104	18.03
7	0.01	13.7	4.6	9048	105	17.95
7	0.01	13.8	4.4	9054	104	17.78
5	0	13.6	4.3	9054	104	17.76
5	0.01	13.3	4.2	9060	105	17.75
7	0.02	13.2	4.2	9054	104	17.76
10	0.07	13.3	4.1	9054	105	17.63
19	0.31	13.6	4.2	9048	105	17.5
23	0.49	13.7	4.2	9042	103	17.37
22	0.48	13.5	4.2	9048	103	17.41
15	0.22	13.6	4	9054	104	17.4
11	0.12	13.7	3.9	9054	104	17.37
6	0.03	14.1	3.8	9054	109	17.27
6	0.02	14.5	3.6	9048	106	17.06
5	0.02	14.6	3.5	9048	105	16.97
4	0.02	14.4	3.3	9048	104	16.87
3	0.01	13.9	3.1	9054	105	16.81
3	0.01	13.7	3	9048	107	16.79
4	0.01	13.5	2.9	9048	105	16.74
7	0.06	13.7	2.9	9048	104	16.68
15	0.3	14	2.9	9024	104	16.51
30	0.92	13.9	3	8982	104	16.29
46	1.79	13.6	3	8982	104	15.81
49	1.96	13.5	2.9	8994	104	15.68
47	1.6	13.6	2.8	9036	102	15.75
34	0.89	13.9	2.7	9048	102	16.1
18	0.37	14.3	2.6	9048	104	16.23
9	0.16	14.4	2.5	9060	104	16.24
4	0.07	14.4	2.4	9072	104	16.23
4	0.05	14.4	2.4	9060	103	16.23
3	0.03	14.4	2.3	9054	103	16.17
3	0.02	14.3	2.3	9054	105	16.19
3	0.01	14.3	2.2	9054	103	16.13
4	0.03	14.1	2.2	9054	104	16.14
5	0.04	14	2.2	9048	104	16.14
6	0.04	14	2.2	9054	108	16.14
6	0.04	14.1	2.2	9048	103	16.13
6	0.02	14.4	2.2	9048	104	16.11
5	0.01	14.5	2.2	9048	104	16.1
5	0.01	14.5	2.2	9054	104	16.1
5	0.01	14.5	2.1	9054	103	16.04
5	0.01	14.4	2.1	9048	103	16.04
6	0.01	14.3	2	9054	104	15.98
6	0.01	14.4	2	9048	104	15.97
6	0.01	14.4	1.9	9048	104	15.91
5	0.01	14.4	1.9	9048	104	15.91
4	0.01	14.3	1.9	9054	105	15.91
5	0.01	14.2	1.9	9054	105	15.92
6	0.01	14.2	1.9	9054	104	15.92
9	0.01	14.3	1.9	9054	104	15.91
7	0.02	14.4	1.9	9054	104	15.89
6	0.02	14.5	1.9	9054	104	15.89
4	0.01	14.5	1.9	9048	106	15.89
4	0.01	14.5	1.9	9048	106	15.89
3	0.02	14.6	1.9	9048	104	15.88
3	0.03	14.7	1.8	9054	104	15.81
3	0.03	14.7	1.8	9054	104	15.81
3	0.03	14.5	1.7	9048	105	15.75
3	0.01	14.1	1.7	9048	105	15.79
3	0.01	13.9	1.7	9048	105	15.81
3	0.01	13.9	1.7	9042	104	15.81
4	0.02	14	1.7	9048	106	15.79
5	0.06	14.4	1.7	9048	106	15.75
7	0.13	14.7	1.8	9048	104	15.76
7	0.2	14.7	1.9	9054	104	15.79
8	0.29	14.5	1.9	9042	108	15.78
7	0.25	14.3	1.8	9048	104	15.73
6	0.21	14.3	1.8	9054	104	15.76
5	0.14	14.3	1.8	9048	104	15.79
4	0.04	14.4	1.7	9048	104	15.75
3	0.01	14.6	1.7	9054	104	15.75
3	0.01	14.6	1.6	9054	103	15.69
3	0.01	14.6	1.6	9054	104	15.69
3	0.01	14.6	1.5	9054	103	15.62
3	0.01	14.6	1.5	9054	104	15.62
3	0.01	14.6	1.5	9048	104	15.62
3	0.01	14.6	1.5	9048	104	15.62
3	0.01	14.5	1.5	9048	106	15.62
3	0.01	14.6	1.5	9048	105	15.62
3	0.01	14.6	1.4	9054	103	15.54

3	0.01	14.6	1.4	9054	106	15.54
3	0.01	14.6	1.4	9054	107	15.54
3	0.02	14.6	1.4	9048	105	15.54
3	0.02	14.4	1.4	9054	104	15.56
3	0.02	14.4	1.4	9048	104	15.56
3	0.04	14.4	1.4	9048	104	15.54
3	0.09	14.6	1.4	9048	104	15.51
3	0.1	14.6	1.4	9054	105	15.51
3	0.11	14.6	1.4	9054	106	15.5
3	0.07	14.6	1.4	9054	104	15.51
3	0.02	14.5	1.4	9054	105	15.54
3	0.01	14.4	1.4	9048	104	15.56
3	0.01	14.3	1.4	9048	104	15.56
3	0.01	14.3	1.4	9048	104	15.56
3	0.01	14.3	1.4	9054	104	15.56
3	0.01	14.4	1.4	9054	103	15.56
4	0.01	14.4	1.4	9054	104	15.56
4	0.01	14.5	1.4	9048	104	15.54
4	0.01	14.5	1.4	9048	104	15.54
4	0.01	14.5	1.4	9048	104	15.54
4	0.01	14.6	1.4	9048	106	15.54
3	0.01	14.6	1.4	9054	104	15.54
3	0.01	14.6	1.4	9048	104	15.54
2	0.01	14.5	1.4	9054	104	15.56
3	0.01	14.5	1.4	9054	104	15.56
3	0.01	14.5	1.4	9054	104	15.56
3	0.01	14.4	1.3	9054	103	15.49
3	0.01	14.4	1.3	9048	104	15.49
5	0.01	14.4	1.4	9048	104	15.56
5	0.01	14.4	1.4	9048	104	15.56
5	0.01	14.4	1.4	9048	104	15.56
5	0.01	14.4	1.4	9048	106	15.56
5	0.01	14.4	1.4	9054	106	15.56
5	0.01	14.5	1.4	9054	104	15.54
4	0.01	14.5	1.4	9054	104	15.54
4	0.01	14.5	1.4	9048	103	15.54
4	0.01	14.6	1.4	9048	104	15.54
4	0.02	14.6	1.4	9048	105	15.54
3	0.03	14.5	1.4	9048	104	15.54
3	0.03	14.2	1.4	9054	105	15.56
2	0.03	14	1.4	9054	105	15.57
3	0.02	13.7	1.4	9054	104	15.6
3	0.01	13.6	1.5	9054	106	15.69
3	0.01	13.6	1.5	9048	104	15.69
4	0.01	13.6	1.6	9048	104	15.76
4	0	13.7	1.7	9048	104	15.84
3	0	13.7	1.8	9048	107	15.91
3	0	13.7	1.8	9048	107	15.91
4	0.01	13.9	1.9	9054	104	15.95
4	0.04	14.1	1.9	9048	103	15.92
4	0.08	14.5	2	9048	105	15.94
3	0.09	14.5	2	9048	104	15.94
3	0.07	14.3	1.9	9048	99	15.89
3	0.03	14	1.8	9048	104	15.87
3	0.02	14	1.8	9048	104	15.87
3	0.01	14.3	1.7	9054	104	15.78
2	0.01	14.5	1.6	9054	104	15.69
2	0	14.5	1.5	9048	104	15.63
3	0.01	14.5	1.5	9048	104	15.62
3	0.05	14.7	1.5	9054	104	15.59
3	0.09	14.8	1.5	9048	105	15.57
6	0.25	14.9	1.4	9048	104	15.43
7	0.37	14.8	1.4	9054	104	15.38
7	0.34	14.6	1.4	9060	104	15.41
5	0.19	14.5	1.4	9054	104	15.47
3	0.07	14.5	1.4	9048	104	15.53
3	0.02	14.5	1.3	9048	104	15.49
3	0.02	14.5	1.3	9048	105	15.49
3	0.01	14.5	1.3	9048	102	15.49
3	0.01	14.5	1.3	9048	104	15.49
2	0.01	14.5	1.3	9048	104	15.49
3	0.01	14.5	1.3	9054	106	15.49
3	0.01	14.5	1.3	9054	104	15.49
3	0.01	14.5	1.3	9054	106	15.49
3	0.01	14.5	1.2	9054	105	15.41
3	0.01	14.5	1.2	9048	100	15.41
3	0.01	14.5	1.2	9048	106	15.41
3	0.01	14.6	1.2	9048	104	15.41
3	0.01	14.6	1.2	9048	105	15.41
3	0.02	14.6	1.2	9048	104	15.4
3	0.04	14.5	1.2	9054	105	15.4
3	0.04	14.4	1.2	9054	105	15.41
3	0.03	14.3	1.2	9048	104	15.41
4	0.02	14.3	1.2	9054	104	15.43
4	0.01	14.3	1.2	9048	104	15.43
4	0.01	14.5	1.3	9048	103	15.49
3	0.01	14.6	1.3	9048	105	15.47
3	0.01	14.6	1.3	9060	106	15.47
3	0.01	14.6	1.3	9060	104	15.47
3	0.01	14.6	1.3	9060	106	15.47
3	0.01	14.6	1.3	9054	106	15.47
2	0.02	14.5	1.2	9048	104	15.41
3	0.02	14.4	1.2	9042	104	15.41
3	0.01	14.4	1.2	9048	104	15.41
3	0.01	14.4	1.2	9048	106	15.41
3	0	14.5	1.2	9048	106	15.41
3	0	14.4	1.2	9054	104	15.43
3	0.01	14.5	1.2	9054	104	15.41
4	0.01	14.6	1.2	9048	104	15.41
3	0.01	14.6	1.2	9048	104	15.41
3	0.01	14.5	1.2	9048	106	15.41
3	0.01	14.4	1.3	9048	105	15.49

3	0.01	14.4	1.3	9048	104	15.49
3	0	14.4	1.3	9048	101	15.5
3	0	14.6	1.3	9054	104	15.49
3	0	14.5	1.3	9054	103	15.49
3	0	14.2	1.3	9054	104	15.5
3	0	13.9	1.3	9054	104	15.53
4	0	13.8	1.3	9048	104	15.53
3	0	13.9	1.3	9048	104	15.53
3	0	14.1	1.4	9048	104	15.59
3	0.01	14.5	1.4	9048	104	15.56
2	0.01	14.6	1.5	9054	103	15.62
1	0	14.5	1.5	9054	106	15.63
2	0	14.1	1.5	9048	105	15.66
2	0	13.7	1.4	9048	104	15.62
2	0	13.5	1.4	9048	104	15.63
3	0.02	13.8	1.4	9054	104	15.6
5	0.12	14.3	1.5	9048	105	15.59
5	0.21	14.8	1.6	9054	105	15.59
5	0.25	14.8	1.7	9054	104	15.63
4	0.26	14.8	1.7	9048	104	15.63
3	0.15	14.6	1.7	9048	104	15.69
3	0.09	14.5	1.6	9048	104	15.66
2	0.05	14.4	1.5	9048	109	15.62
2	0.03	14.4	1.5	9048	107	15.62
3	0.03	14.4	1.5	9048	102	15.62
2	0.02	14.4	1.4	9048	104	15.56
2	0.01	14.4	1.4	9054	103	15.56
2	0.01	14.4	1.4	9048	105	15.56
2	0.01	14.3	1.4	9048	105	15.56
2	0.01	14.2	1.4	9048	104	15.57
2	0.01	14.1	1.4	9048	104	15.57
3	0.01	14.1	1.4	9054	103	15.57
2	0.01	14.1	1.4	9054	105	15.57
3	0.01	14.1	1.4	9054	104	15.57
3	0.01	14.1	1.3	9054	108	15.51
3	0.01	14.2	1.3	9054	104	15.5
3	0.01	14.2	1.3	9048	104	15.5
3	0.01	14.3	1.3	9048	104	15.5
3	0.01	14.3	1.3	9048	105	15.5
3	0.01	14.3	1.3	9048	105	15.5
3	0	14.3	1.3	9048	106	15.5
3	0	14.3	1.3	9054	104	15.5
4	0	14.3	1.3	9054	105	15.5
3	0	14.3	1.3	9054	105	15.5
4	0	14.3	1.3	9054	103	15.5
4	0	14.3	1.3	9048	104	15.5
4	0	14	1.3	9048	104	15.51
4	0	13.9	1.3	9054	103	15.53
5	0.01	13.9	1.4	9054	104	15.59
5	0.01	14	1.4	9054	104	15.59
4	0.03	14.4	1.5	9054	103	15.62
3	0.05	14.6	1.6	9060	104	15.66
4	0.07	14.5	1.6	9054	105	15.66
4	0.08	14.5	1.5	9048	104	15.59
4	0.08	14.5	1.5	9048	104	15.59
4	0.05	14.5	1.4	9048	104	15.53
4	0.04	14.6	1.3	9054	106	15.46
5	0.04	14.6	1.3	9054	105	15.46
6	0.09	14.6	1.2	9060	105	15.37
7	0.14	14.5	1.2	9054	104	15.35
7	0.16	14.5	1.2	9054	104	15.35
6	0.15	14.5	1.2	9060	104	15.35
6	0.12	14.5	1.2	9054	104	15.37
6	0.1	14.5	1.2	9048	104	15.37
6	0.12	14.5	1.2	9048	108	15.37
9	0.24	14.4	1.2	9048	104	15.33
19	0.84	13.7	1.2	9006	101	15.12
38	2.3	12.6	1.2	8972	104	14.46
49	3.27	11.9	1.2	8972	106	14.03
66	5.2	11.2	1.1	8972	104	13.16
63	4.57	11.4	1.1	8978	105	13.34
48	2.8	12.1	1.1	9012	104	14.11
31	1.31	13.2	1.1	9042	104	14.87
15	0.41	14.1	1.1	9048	104	15.19
13	0.28	14.2	1.1	9048	104	15.25
10	0.13	14.2	1.1	9054	104	15.31
6	0.05	14.2	1.1	9054	105	15.34
5	0.02	14.2	1.1	9054	104	15.35
4	0.01	14.2	1.1	9054	104	15.35
4	0.01	14.3	1.1	9048	104	15.35
4	0.01	14.3	1.1	9048	104	15.35
4	0.01	14.4	1.1	9054	104	15.35
4	0.01	14.5	1.1	9054	108	15.34
4	0.01	14.6	1.1	9054	106	15.34
4	0.02	14.6	1.1	9054	106	15.34
5	0.02	14.6	1.1	9054	104	15.34
5	0.02	14.6	1.1	9054	104	15.34
5	0.02	14.6	1.1	9048	105	15.34
5	0.01	14.6	1.1	9048	104	15.34
6	0.05	14.6	1.1	9048	103	15.33
9	0.09	14.6	1.1	9048	107	15.31
10	0.1	14.6	1.1	9054	104	15.3
10	0.1	14.5	1.1	9054	104	15.31
6	0.06	14.4	1.1	9048	104	15.33
4	0.02	14.4	1.1	9054	104	15.34
3	0.01	14.4	1.1	9066	104	15.35
3	0.01	14.4	1.1	9054	104	15.35
3	0.01	14.4	1.1	9054	104	15.35
3	0.01	14.4	1.1	9054	104	15.35
3	0.01	14.4	1.1	9054	104	15.35
3	0.01	14.4	1.1	9054	102	15.35
2	0.01	14.4	1.1	9048	104	15.35

2	0.01	14.5	1.1	9048	105	15.34
3	0.01	14.5	1.1	9048	105	15.34
3	0.01	14.6	1.1	9048	105	15.34
4	0.05	14.6	1.1	9048	103	15.33
6	0.1	14.5	1.1	9048	104	15.31
7	0.11	14.5	1.1	9054	104	15.3
7	0.1	14.5	1.1	9054	103	15.31
6	0.07	14.4	1.1	9048	105	15.33
5	0.03	14.4	1.1	9060	104	15.34
5	0.02	14.4	1.1	9060	104	15.34
4	0.01	14.4	1.1	9060	101	15.35
4	0.01	14.4	1.1	9054	104	15.35
3	0.01	14.4	1.1	9048	104	15.35
4	0	14.4	1.1	9054	104	15.35
3	0	14.4	1.1	9054	108	15.35
4	0	14.4	1.1	9054	103	15.35
4	0.01	14.5	1.1	9054	104	15.34
4	0.02	14.5	1.1	9042	104	15.34
4	0.02	14.4	1.1	9048	103	15.34
4	0.02	14.4	1.1	9048	104	15.34
4	0.02	14.3	1.1	9054	104	15.35
3	0.01	14.3	1.1	9054	107	15.35
3	0.01	14.4	1.1	9048	104	15.35
2	0.01	14.4	1.1	9048	104	15.35
3	0.01	14.5	1.1	9054	105	15.34
2	0.01	14.5	1.1	9048	105	15.34
2	0.01	14.6	1.2	9048	104	15.41
2	0.01	14.6	1.2	9054	103	15.41
3	0.02	14.6	1.2	9048	104	15.4
2	0.05	14.6	1.2	9048	103	15.4
2	0.07	14.5	1.1	9054	104	15.33
3	0.08	14.5	1.1	9054	106	15.31
3	0.08	14.5	1.1	9048	104	15.31
3	0.07	14.5	1.1	9042	104	15.33
4	0.08	14.5	1.1	9048	104	15.31
4	0.08	14.5	1.1	9048	105	15.31
4	0.07	14.4	1.1	9054	106	15.33
5	0.05	14.4	1.1	9054	105	15.33
5	0.04	14.5	1.1	9048	105	15.33
5	0.03	14.5	1.1	9054	106	15.34
5	0.03	14.5	1.1	9066	104	15.34
5	0.03	14.5	1.1	9066	104	15.34
5	0.05	14.5	1.1	9060	107	15.33
4	0.08	14.5	1.1	9054	103	15.31
5	0.08	14.4	1.1	9048	105	15.33
4	0.07	14.5	1.1	9054	104	15.33
4	0.04	14.5	1.1	9054	104	15.33
3	0.02	14.5	1.1	9054	104	15.34
3	0.02	14.5	1.1	9054	103	15.34
3	0.02	14.5	1.1	9048	104	15.34
3	0.01	14.5	1.1	9048	104	15.34
3	0.01	14.5	1.1	9048	104	15.34
4	0.01	14.4	1.1	9054	103	15.35
3	0.01	14.4	1.1	9054	105	15.35
4	0.01	14.5	1.1	9054	102	15.34
3	0.02	14.5	1.1	9054	104	15.34
3	0.03	14.5	1.1	9054	104	15.34
2	0.03	14.5	1.1	9048	104	15.34
2	0.05	14.5	1.1	9048	104	15.33
3	0.08	14.5	1.1	9048	105	15.31
3	0.09	14.5	1.1	9048	106	15.31
3	0.09	14.4	1.1	9054	104	15.33
3	0.06	14.3	1.1	9054	104	15.34
3	0.02	14.4	1.1	9054	104	15.34
3	0.01	14.4	1.1	9048	104	15.35
3	0.01	14.5	1.1	9048	104	15.34
2	0.01	14.5	1.1	9048	104	15.34
2	0.01	14.5	1.1	9048	103	15.34
2	0.01	14.5	1.1	9054	104	15.34
3	0.01	14.4	1.1	9054	104	15.35
3	0.01	14.5	1.1	9054	106	15.34
2	0.01	14.5	1.1	9054	104	15.34
3	0.01	14.5	1.1	9054	104	15.34
3	0	14.5	1.1	9048	104	15.35
3	0	14.5	1.1	9048	107	15.35
3	0	14.5	1.1	9054	104	15.35
3	0.01	14.4	1.1	9048	103	15.35
3	0.01	14.4	1.1	9054	104	15.35
3	0.01	14.4	1.1	9054	104	15.35
2	0.01	14.5	1.1	9048	105	15.34
3	0.01	14.5	1.1	9048	103	15.34
3	0.01	14.5	1.1	9042	104	15.34
3	0.01	14.5	1.1	9042	104	15.34
3	0.01	14.5	1.1	9048	104	15.34
2	0.01	14.5	1.1	9054	104	15.34
3	0.01	14.5	1.1	9054	105	15.34
3	0.01	14.5	1.1	9048	104	15.34
3	0.01	14.5	1.1	9048	105	15.34
3	0.01	14.4	1.1	9054	103	15.35
3	0.01	14.5	1.1	9048	104	15.34
3	0.01	14.5	1.1	9048	104	15.34
2	0.01	14.5	1.1	9054	104	15.34
3	0.01	14.5	1.1	9054	105	15.34
3	0.01	14.5	1.1	9054	105	15.34
2	0.01	14.5	1.1	9054	104	15.34
2	0.01	14.5	1.1	9048	104	15.34
2	0.01	14.4	1.1	9048	104	15.35
2	0.01	14.4	1.1	9048	104	15.35
3	0.01	14.4	1.1	9054	104	15.35
4	0.01	14.4	1.1	9054	104	15.35
3	0.01	14.5	1.1	9054	106	15.34
4	0.01	14.5	1.1	9054	104	15.34

3	0.01	14.5	1.1	9054	104	15.34
3	0.01	14.5	1.1	9054	105	15.34
3	0	14.5	1.1	9054	102	15.35
3	0	14.5	1.1	9060	103	15.35
2	0.01	14.5	1.1	9054	104	15.34
2	0.01	14.5	1.1	9048	103	15.34
3	0.01	14.5	1.1	9048	103	15.34
2	0.01	14.5	1.1	9048	105	15.34
2	0.01	14.5	1.1	9054	104	15.34
2	0.01	14.5	1.1	9054	106	15.34
2	0.01	14.5	1.1	9054	104	15.34
2	0.01	14.4	1.1	9048	103	15.35
2	0.01	14.5	1.1	9048	104	15.34
3	0.01	14.5	1.1	9054	106	15.34
3	0.01	14.5	1.1	9054	105	15.34
3	0.01	14.5	1.1	9054	105	15.34
3	0.01	14.5	1.1	9054	105	15.34
3	0.01	14.4	1.1	9054	104	15.35
3	0.01	14.4	1.1	9054	104	15.35
3	0.01	14.4	1.1	9048	108	15.35
3	0.01	14.5	1.1	9048	104	15.34
3	0.01	14.5	1.1	9048	104	15.34
4	0.01	14.4	1.1	9048	104	15.35
4	0.01	14.4	1.1	9048	105	15.35
4	0.01	14.4	1.1	9054	104	15.35
4	0.01	14.3	1.1	9054	107	15.35
3	0.01	14.3	1.2	9054	104	15.43
3	0.01	14.3	1.2	9048	104	15.43
3	0.01	14.4	1.2	9048	105	15.41
3	0.01	14.5	1.2	9048	106	15.41
3	0.01	14.5	1.2	9054	108	15.41
3	0.01	14.5	1.2	9054	104	15.41
2	0.01	14.6	1.2	9060	104	15.41
2	0	14.6	1.2	9054	105	15.41
2	0	14.6	1.2	9054	104	15.41
2	0	14.5	1.2	9060	105	15.41
2	0	14.5	1.1	9054	104	15.35
2	0.01	14.5	1.1	9048	106	15.34
2	0.01	14.5	1.1	9048	105	15.34
3	0.01	14.4	1.1	9048	103	15.35
3	0.01	14.4	1.1	9054	107	15.35
3	0.01	14.4	1.1	9054	105	15.35
3	0.01	14.4	1.1	9054	104	15.35
3	0.01	14.4	1.1	9048	103	15.35
2	0.01	14.5	1.1	9054	104	15.34
3	0.01	14.5	1.1	9048	105	15.34
3	0.01	14.5	1.2	9048	105	15.41
2	0.01	14.6	1.2	9048	104	15.41
3	0.01	14.5	1.1	9054	105	15.34
2	0.01	14.5	1.1	9054	106	15.34
2	0.01	14.5	1.1	9054	105	15.34
3	0	14.5	1.1	9048	102	15.35
3	0	14.5	1.1	9048	106	15.35
2	0	14.5	1.1	9048	101	15.35
2	0	14.4	1.1	9048	105	15.35
2	0	14.5	1.1	9054	105	15.35
2	0	14.5	1.1	9054	103	15.35
2	0	14.5	1.1	9054	104	15.35
2	0	14.5	1.1	9048	104	15.35
3	0	14.5	1.1	9048	104	15.35
3	0.01	14.4	1.1	9054	104	15.35
3	0.01	14.4	1.1	9048	104	15.35
3	0.01	14.4	1.1	9054	106	15.35
3	0.01	14.5	1.1	9054	104	15.34
3	0.01	14.4	1.1	9054	104	15.35
2	0	14.4	1.1	9054	104	15.35
3	0	14.4	1.1	9054	104	15.35
3	0	14.4	1.1	9054	104	15.35
3	0	14.4	1.1	9048	103	15.35
3	0	14.5	1.1	9048	108	15.35
3	0.01	14.5	1.1	9048	106	15.34
3	0.01	14.6	1.1	9054	104	15.34
3	0.01	14.6	1.1	9054	106	15.34
3	0.01	14.5	1.1	9054	106	15.34
3	0.01	14.5	1.1	9054	104	15.34
2	0.01	14.5	1.1	9060	106	15.34
3	0.01	14.5	1.1	9054	105	15.34
2	0.01	14.4	1.1	9048	103	15.35
3	0.01	14.4	1.1	9048	104	15.35
3	0.01	14.4	1.1	9060	104	15.35
3	0.01	14.5	1.1	9066	105	15.34
2	0.01	14.5	1.1	9054	104	15.34
2	0.01	14.5	1.1	9054	104	15.34
2	0.01	14.5	1.1	9048	107	15.34
2	0.01	14.5	1.1	9048	104	15.34
2	0.01	14.5	1.1	9048	104	15.34
2	0.01	14.5	1.1	9048	104	15.34
2	0.01	14.5	1.1	9048	104	15.34
2	0.01	14.5	1.1	9048	104	15.34
2	0.01	14.5	1.1	9054	104	15.34
3	0.01	14.5	1.1	9048	105	15.34
2	0.04	14.6	1.1	9048	106	15.33
3	0.11	14.7	1.1	9048	104	15.3
3	0.14	14.6	1.1	9042	104	15.28
3	0.15	14.6	1.1	9048	105	15.28
2	0.07	14.5	1.1	9054	103	15.33
3	0.03	14.5	1.1	9048	104	15.34
3	0.03	14.5	1.1	9048	104	15.34
3	0.03	14.5	1.1	9054	105	15.34
2	0.04	14.4	1.1	9048	104	15.34
3	0.04	14.2	1.1	9048	104	15.35
3	0.03	14.1	1.1	9048	104	15.35

4	0.02	14.1	1.1	9048	104	15.35
3	0.01	14.3	1.2	9048	104	15.43
3	0.01	14.4	1.2	9048	103	15.41
3	0.01	14.5	1.2	9054	104	15.41
3	0.01	14.5	1.2	9048	104	15.41
3	0.01	14.5	1.2	9048	104	15.41
2	0.01	14.5	1.2	9054	105	15.41
3	0.01	14.5	1.2	9048	104	15.41
3	0.04	14.5	1.1	9048	106	15.34
2	0.05	14.5	1.1	9048	104	15.33
3	0.05	14.4	1.1	9054	103	15.34
3	0.05	14.4	1.1	9054	102	15.34
3	0.02	14.4	1.1	9048	105	15.34
3	0.01	14.4	1.1	9048	106	15.35
3	0.01	14.5	1.1	9048	104	15.34
2	0.01	14.5	1.1	9048	103	15.34
2	0.01	14.5	1.1	9048	104	15.34
2	0.01	14.5	1.1	9054	106	15.34
2	0.01	14.4	1.1	9054	104	15.35
2	0.01	14.4	1.1	9054	104	15.35
2	0.01	14.4	1.1	9054	102	15.35
2	0.01	14.5	1.1	9054	105	15.34
3	0.02	14.5	1.1	9048	104	15.34
2	0.08	14.5	1.1	9048	104	15.31
3	0.1	14.5	1.1	9048	103	15.31
3	0.11	14.4	1.1	9054	102	15.31
2	0.07	14.3	1.1	9060	106	15.33
2	0.03	14.3	1.1	9054	108	15.35
2	0.02	14.3	1.1	9048	103	15.35
3	0.01	14.4	1.1	9048	104	15.35
2	0.02	14.5	1.1	9048	105	15.34
2	0.03	14.6	1.2	9048	104	15.4
2	0.03	14.6	1.2	9048	106	15.4
2	0.04	14.5	1.2	9048	104	15.4
2	0.05	14.5	1.2	9054	104	15.4
2	0.05	14.4	1.2	9054	104	15.4
2	0.05	14.4	1.3	9054	104	15.47
2	0.04	14.4	1.2	9054	104	15.41
2	0.03	14.3	1.2	9054	103	15.41
2	0.02	14.4	1.2	9048	106	15.41
2	0.01	14.3	1.2	9048	104	15.43
2	0.01	14.3	1.2	9054	107	15.43
2	0.01	14.3	1.2	9054	106	15.43
2	0.01	14.4	1.2	9054	105	15.41
1	0.01	14.5	1.2	9054	107	15.41
0	0.01	14.5	1.2	9054	106	15.41
0	0.01	14.4	1.2	9054	105	15.43
1	0.01	14.1	1.2	9048	105	15.44
2	0	13.8	1.2	9054	104	15.46
2	0.01	13.9	1.2	9048	105	15.46
2	0.06	14.1	1.2	9048	104	15.41
4	0.13	14.2	1.2	9054	104	15.38
4	0.14	14.4	1.3	9054	104	15.44
5	0.12	14.2	1.3	9054	105	15.46
4	0.02	14.3	1.3	9054	104	15.49
3	0.01	14.4	1.3	9042	107	15.49
3	0	14.5	1.3	9048	104	15.49
3	0.01	14.5	1.3	9048	102	15.49
3	0.02	14.5	1.3	9054	102	15.49
3	0.03	14.5	1.2	9060	104	15.41
2	0.04	14.5	1.2	9060	104	15.4
3	0.04	14.5	1.2	9054	104	15.4
3	0.03	14.5	1.1	9048	104	15.34
3	0.03	14.5	1.1	9048	103	15.34
3	0.04	14.5	1.1	9048	104	15.34
3	0.04	14.5	1.1	9042	105	15.34
3	0.07	14.5	1.1	9048	105	15.33
3	0.07	14.5	1.1	9048	106	15.33
3	0.07	14.5	1.1	9048	105	15.33
3	0.04	14.4	1.1	9054	104	15.34
3	0.03	14.4	1.1	9054	104	15.34
2	0.02	14.4	1.1	9048	104	15.34
3	0.01	14.3	1.1	9048	104	15.35
3	0.01	14.4	1.1	9048	104	15.35
3	0.01	14.4	1.1	9048	104	15.35
2	0.01	14.4	1.1	9048	105	15.35
3	0	14.5	1.1	9054	103	15.35
2	0	14.5	1.1	9054	101	15.35
2	0	14.5	1.1	9054	106	15.35
3	0	14.5	1.1	9054	106	15.35
3	0	14.5	1.1	9054	103	15.35
2	0	14.5	1.1	9054	105	15.35
3	0	14.5	1.1	9054	104	15.35
2	0	14.5	1.1	9054	104	15.35
2	0	14.5	1.1	9054	106	15.35
2	0	14.5	1.1	9054	106	15.35
2	0	14.5	1.1	9054	104	15.35
1	0	14.5	1.1	9048	104	15.35
2	0	14.5	1.1	9048	104	15.35
2	0.01	14.5	1.1	9048	103	15.34
2	0	14.5	1.1	9048	103	15.35
2	0	14.5	1.1	9054	103	15.35
2	0	14.5	1.1	9054	103	15.35
3	0.01	14.4	1.1	9054	105	15.35
3	0.01	14.2	1.1	9054	104	15.35
3	0	14.1	1.2	9048	105	15.44
3	0	14.3	1.2	9048	104	15.43
3	0	14.3	1.2	9048	104	15.43
4	0	14.4	1.2	9048	105	15.43
3	0	14.4	1.2	9048	104	15.43
3	0	14.4	1.2	9054	104	15.43
3	0	14.4	1.2	9048	103	15.43

3	0	14.5	1.2	9054	104	15.41
2	0	14.6	1.2	9054	104	15.41
2	0	14.6	1.2	9048	104	15.41
2	0.01	14.5	1.2	9048	107	15.41
2	0.01	14.5	1.2	9048	105	15.41
2	0.01	14.5	1.2	9054	104	15.41
2	0.01	14.5	1.2	9048	104	15.41
2	0.01	14.4	1.2	9048	101	15.41
2	0	14.4	1.1	9054	104	15.35
2	0	14.4	1.1	9048	105	15.35
2	0	14.4	1.1	9048	104	15.35
2	0	14.4	1.1	9048	104	15.35
2	0	14.4	1.1	9048	107	15.35
3	0	14.5	1.1	9048	104	15.35
3	0	14.5	1.1	9054	103	15.35
3	0.01	14.6	1.1	9054	106	15.34
2	0.01	14.6	1.1	9054	104	15.34
2	0.02	14.4	1.1	9054	104	15.34
3	0.02	14.3	1.1	9048	104	15.35
3	0.01	14.2	1.1	9048	105	15.35
3	0.01	14.2	1.1	9048	104	15.35
4	0.01	14.3	1.1	9048	104	15.35
4	0	14.4	1.2	9048	103	15.43
3	0	14.4	1.2	9048	104	15.43
3	0	14.4	1.2	9054	104	15.43
3	0	14.4	1.2	9054	107	15.43
3	0	14.4	1.2	9054	103	15.43
4	0	14.4	1.2	9060	106	15.43
4	0	14.4	1.2	9060	104	15.43
4	0	14.3	1.2	9054	106	15.43
4	0	14.3	1.2	9060	105	15.43
4	0	14.3	1.2	9060	104	15.43
4	0	14.3	1.2	9054	105	15.43
4	0	14.3	1.2	9048	104	15.43
4	0	14.4	1.2	9048	107	15.43
4	0	14.4	1.2	9048	104	15.43
4	0	14.4	1.2	9048	108	15.43
4	0.01	14.5	1.2	9048	104	15.41
3	0.01	14.5	1.2	9048	105	15.41
3	0.01	14.6	1.2	9054	99	15.41
2	0.01	14.7	1.2	9054	105	15.4
2	0.01	14.6	1.2	9054	104	15.41
2	0.01	14.6	1.2	9054	104	15.41
2	0.01	14.5	1.2	9054	104	15.41
3	0.01	14.4	1.2	9048	106	15.41
3	0.01	14.4	1.2	9048	105	15.41
2	0.01	14.4	1.2	9048	102	15.41
2	0.01	14.5	1.2	9048	104	15.41
2	0.01	14.5	1.2	9054	105	15.41
2	0	14.5	1.1	9048	104	15.35
2	0	14.5	1.1	9054	105	15.35
2	0	14.5	1.1	9048	106	15.35
2	0	14.5	1.1	9048	104	15.35
2	0	14.5	1.1	9048	106	15.35
2	0	14.5	1.1	9048	108	15.35
2	0	14.4	1.1	9048	104	15.35
3	0	14.4	1.1	9054	103	15.35
3	0	14.4	1.1	9048	102	15.35
3	0	14.4	1.1	9054	105	15.35
4	0	14.3	1.1	9048	104	15.35
4	0	14.3	1.1	9048	104	15.35
3	0	14.4	1.1	9048	103	15.35
3	0	14.4	1.1	9048	106	15.35
3	0	14.5	1.1	9054	104	15.35
3	0	14.5	1.2	9054	106	15.41
3	0	14.4	1.2	9048	104	15.43
4	0	14.4	1.2	9054	103	15.43
4	0	14.4	1.2	9060	104	15.43
4	0	14.4	1.2	9060	107	15.43
4	0	14.4	1.2	9054	105	15.43
4	0	14.4	1.2	9048	104	15.43
4	0	14.4	1.2	9054	104	15.43
4	0	14.4	1.2	9054	106	15.43
4	0	14.4	1.2	9048	104	15.43
4	0	14.4	1.2	9054	105	15.43
5	0	14.4	1.2	9048	104	15.43
5	0	14.4	1.2	9048	104	15.43
4	0	14.5	1.2	9048	104	15.41
4	0.01	14.5	1.2	9048	104	15.41
3	0.01	14.5	1.2	9048	103	15.41
3	0	14.5	1.2	9048	106	15.41
3	0	14.5	1.2	9048	104	15.41
3	0	14.5	1.2	9054	104	15.41
3	0	14.5	1.2	9054	105	15.41
3	0	14.5	1.2	9054	105	15.41
3	0	14.4	1.2	9060	104	15.43
3	0	14.3	1.2	9066	105	15.43
3	0	14.3	1.2	9066	105	15.43
3	0	14.3	1.2	9054	104	15.43
3	0	14.4	1.2	9054	108	15.43
2	0	14.5	1.3	9054	103	15.49
2	0	14.5	1.3	9054	106	15.49
2	0	14.5	1.3	9054	104	15.49
2	0.01	14.5	1.2	9048	108	15.41
2	0.01	14.5	1.2	9048	104	15.41
3	0.01	14.5	1.2	9054	104	15.41
3	0.01	14.5	1.2	9048	102	15.41
3	0.01	14.5	1.2	9054	107	15.41
3	0.01	14.5	1.2	9054	107	15.41
3	0.01	14.5	1.2	9054	105	15.41
2	0.01	14.6	1.1	9054	105	15.34
2	0.01	14.7	1.1	9048	104	15.34

3	0.01	14.4	1.1	9048	104	15.35
3	0.01	14.1	1.2	9048	104	15.44
3	0	13.8	1.2	9048	106	15.46
3	0	13.6	1.2	9048	105	15.47
2	0	13.6	1.3	9054	104	15.54
2	0	13.7	1.4	9054	104	15.62
3	0	13.7	1.5	9054	103	15.69
3	0	13.9	1.6	9054	104	15.75
3	0	14.3	1.7	9054	104	15.78
5	0.08	14.4	1.7	9054	103	15.73
6	0.11	14.4	1.7	9048	105	15.72
6	0.11	14.4	1.7	9048	105	15.72
7	0.12	14.4	1.6	9054	105	15.65
4	0.05	14.5	1.5	9048	104	15.6
4	0.04	14.6	1.5	9054	104	15.6
3	0.05	14.5	1.4	9048	103	15.53
3	0.05	14.5	1.3	9048	105	15.47
3	0.05	14.5	1.3	9048	104	15.47
3	0.05	14.5	1.3	9048	104	15.47
3	0.04	14.4	1.2	9048	103	15.41
3	0.03	14.5	1.2	9054	104	15.41
3	0.02	14.5	1.2	9054	105	15.41
3	0.01	14.5	1.1	9054	104	15.34
3	0.01	14.6	1.1	9054	104	15.34
2	0	14.5	1.1	9048	104	15.35
2	0	14.4	1.1	9060	105	15.35
2	0	14.4	1.1	9060	104	15.35
2	0	14.4	1.1	9054	105	15.35
2	0	14.3	1.1	9054	104	15.35
3	0	14.4	1.1	9054	106	15.35
2	0	14.5	1.1	9054	107	15.35
2	0	14.6	1.1	9048	104	15.34
2	0	14.6	1.1	9048	104	15.34
2	0	14.6	1.2	9054	104	15.41
2	0	14.6	1.2	9048	104	15.41
2	0	14.5	1.1	9048	106	15.35
2	0	14.5	1.1	9048	104	15.35
2	0	14.5	1.1	9054	105	15.35
2	0	14.5	1.1	9054	104	15.35
2	0	14.5	1.1	9048	106	15.35
2	0	14.5	1.1	9054	104	15.35
2	0	14.5	1.1	9048	103	15.35
2	0	14.5	1.1	9048	102	15.35
2	0	14.4	1.1	9048	105	15.35
2	0	14.4	1.1	9048	104	15.35
3	0	14.4	1.1	9054	103	15.35
3	0	14.4	1.1	9054	104	15.35
3	0	14.4	1.1	9054	104	15.35
3	0	14.5	1.1	9054	103	15.35
3	0	14.5	1.1	9054	104	15.35
3	0.01	14.6	1.1	9048	103	15.34
3	0.01	14.7	1.1	9048	104	15.34
3	0.01	14.6	1.1	9048	104	15.34
3	0.01	14.5	1.1	9054	105	15.34
2	0.01	14.3	1.1	9054	104	15.35
3	0	14.3	1.1	9048	104	15.35
3	0	14.4	1.1	9054	104	15.35
3	0	14.4	1.1	9054	104	15.35
3	0	14.4	1.2	9060	104	15.43
3	0	14.4	1.2	9066	102	15.43
3	0	14.3	1.2	9060	106	15.43
3	0	14.3	1.2	9054	103	15.43
2	0	14.3	1.2	9054	104	15.43
3	0	14.4	1.2	9048	104	15.43
2	0.01	14.5	1.2	9054	104	15.41
2	0.01	14.5	1.2	9054	105	15.41
2	0.01	14.3	1.2	9054	104	15.43
2	0.01	14.1	1.2	9048	101	15.44
3	0.01	13.8	1.2	9048	103	15.46
3	0.01	13.9	1.3	9054	105	15.51
2	0.01	14.2	1.4	9054	102	15.57
2	0.01	14.4	1.5	9048	103	15.63
2	0.01	14.5	1.5	9054	104	15.62
2	0	14.5	1.5	9054	104	15.63
2	0	14.5	1.5	9048	106	15.63
3	0	14.5	1.4	9054	104	15.56
2	0	14.5	1.4	9054	104	15.56
3	0	14.5	1.3	9054	104	15.49
3	0.04	14.6	1.2	9048	105	15.4
3	0.08	14.6	1.2	9048	104	15.38
3	0.09	14.5	1.2	9054	104	15.38
3	0.1	14.5	1.2	9048	104	15.38
2	0.06	14.3	1.2	9048	106	15.4
4	0.02	14.3	1.2	9066	104	15.43
3	0.02	14.3	1.2	9060	106	15.43
3	0.02	14.4	1.2	9048	104	15.41
3	0.03	14.5	1.2	9048	105	15.41
3	0.03	14.5	1.2	9054	105	15.41
2	0.02	14.5	1.2	9054	104	15.41
2	0.02	14.6	1.2	9048	104	15.4
2	0.07	14.6	1.2	9048	105	15.38
1	0.09	14.7	1.2	9048	108	15.37
2	0.13	14.7	1.1	9042	104	15.28
1	0.11	14.4	1.1	9048	104	15.31
2	0.08	14.4	1.1	9048	104	15.33
3	0.07	14.3	1.1	9054	103	15.33
2	0.05	14.3	1.1	9054	104	15.34
3	0.04	14.4	1.2	9054	104	15.41
2	0.02	14.5	1.2	9054	104	15.41
2	0.01	14.5	1.2	9054	104	15.41
2	0	14.5	1.2	9048	103	15.41
2	0	14.5	1.2	9054	104	15.41

2	0.01	14.5	1.2	9054	106	15.41
2	0.02	14.5	1.1	9054	105	15.34
2	0.03	14.5	1.1	9054	106	15.34
3	0.04	14.6	1.1	9048	106	15.33
3	0.02	14.5	1.1	9048	104	15.34
3	0.01	14.5	1.1	9054	105	15.34
3	0.01	14.4	1.1	9048	104	15.35
3	0	14.4	1.2	9054	105	15.43
3	0.03	14.4	1.2	9048	104	15.41
3	0.07	14.4	1.2	9048	106	15.4
3	0.08	14.5	1.2	9048	105	15.38
4	0.08	14.4	1.2	9048	103	15.38
3	0.06	14.5	1.2	9054	104	15.4
3	0.02	14.5	1.2	9048	106	15.41
3	0.01	14.5	1.1	9048	106	15.34
3	0.01	14.6	1.1	9048	106	15.34
3	0.01	14.5	1.1	9048	104	15.34
3	0.02	14.5	1.1	9054	103	15.34
2	0.04	14.5	1.1	9048	104	15.34
2	0.05	14.4	1.1	9048	105	15.34
2	0.05	14.4	1.1	9054	104	15.34
2	0.04	14.3	1.1	9048	105	15.34
2	0.03	14.5	1.1	9054	106	15.34
2	0.05	14.7	1.1	9054	102	15.33
2	0.07	14.6	1.1	9048	104	15.31
2	0.08	14.4	1.1	9054	103	15.33
2	0.08	14.3	1.1	9048	103	15.33
1	0.04	14.1	1.1	9048	104	15.35
2	0.02	14.2	1.1	9060	104	15.35
2	0.01	14.2	1.1	9048	103	15.35
2	0	14.3	1.2	9048	104	15.43
2	0	14.4	1.2	9054	107	15.43
2	0	14.6	1.2	9048	104	15.41
2	0.01	14.7	1.2	9054	104	15.4
2	0.01	14.7	1.2	9054	102	15.4
2	0.01	14.7	1.2	9054	104	15.4
2	0.01	14.6	1.2	9060	104	15.41
2	0.01	14.5	1.2	9054	104	15.41
2	0	14.3	1.2	9054	102	15.43
2	0	14.1	1.2	9060	104	15.44
2	0	14.1	1.2	9066	104	15.44
2	0	14.1	1.2	9066	104	15.44
2	0	14.2	1.3	9054	104	15.5
2	0	14.3	1.3	9048	103	15.5
2	0	14.4	1.3	9054	103	15.5

C:\MPV\07206.OUT 8/12/93

SEC	TIME SEC	SPEED MPH	RPM	ONRD (G s)	ACCL (G s)	ALAT (G s)	GRADE (%)	EXHM grams	EXHCM Mg	EXCO2M grams	EXCOM grams	R	A/F CALC ratio	A/F ANL ratio	MPG sec
1	37427.	.0	0	.000	.001	-.030	.00	.00	.00	.00	.00	.00	28.74	.00	.00
2	37428.	.0	940	.000	.001	-.027	.00	9.43	.16	1.92	.00	.00	26.36	.00	.00
3	37429.	.0	940	.000	.006	-.028	.00	9.50	.16	1.95	.00	.00	24.06	24.20	.00
4	37430.	.0	840	.000	.005	-.030	.00	8.23	.14	1.70	.00	.00	22.07	22.19	.00
5	37431.	.0	780	.000	.002	-.031	.00	7.68	.13	1.59	.00	.00	20.62	20.73	.00
6	37432.	.0	860	.000	.004	-.031	.00	8.36	.14	1.73	.00	.00	19.65	19.75	.00
7	37433.	.0	960	.000	.002	-.027	.00	9.36	.16	1.94	.00	.00	19.03	19.12	.00
8	37434.	.0	1000	.000	.003	-.032	.00	9.93	.17	2.06	.00	.00	18.62	18.70	.00
9	37435.	.0	940	.000	.004	-.029	.00	9.43	.16	1.96	.00	.00	18.48	18.57	.00
10	37436.	.0	880	.000	.002	-.028	.00	8.85	.20	1.82	.00	.00	18.30	18.38	.00
11	37437.	.0	860	.000	.003	-.030	.00	8.44	.24	1.73	.00	.00	18.10	18.19	.00
12	37438.	.0	880	.057	.031	-.028	.00	10.88	.37	2.14	.00	.00	18.11	18.20	.00
13	37439.	2.5	1380	.115	.092	-.020	.00	18.12	.72	3.52	.00	.00	18.09	18.17	1.78
14	37440.	5.1	1960	.150	.163	-.007	.00	28.22	1.28	5.48	.00	.00	18.01	18.10	2.29
15	37441.	9.1	2600	.155	.178	-.012	.00	34.33	1.36	6.81	.00	.00	17.94	18.03	3.31
16	37442.	11.9	2820	.112	.134	-.024	.00	32.46	1.47	6.53	.00	.00	17.96	18.04	4.51
17	37443.	14.0	2760	.076	.090	-.040	.00	27.18	1.08	5.43	.00	.00	17.99	18.07	6.40
18	37444.	15.2	2660	.052	.046	-.042	.00	27.68	1.10	5.49	.00	.00	17.94	18.03	6.87
19	37445.	16.3	1960	.021	.017	-.035	.00	19.27	.76	3.82	.00	.00	17.87	17.95	10.57
20	37446.	16.1	1620	-.009	-.002	-.043	.00	11.39	.45	2.28	.00	.00	17.70	17.78	17.55
21	37447.	15.9	1500	-.029	-.009	-.025	.00	10.53	.30	2.08	.00	.00	17.68	17.76	19.02
22	37448.	14.8	1320	-.090	-.101	-.035	.00	9.44	.27	1.82	.00	.00	17.67	17.75	20.16
23	37449.	11.9	1240	-.172	-.158	-.048	.00	10.47	.42	2.01	.00	.00	17.68	17.76	14.75
24	37450.	7.3	1140	-.210	-.240	-.046	.00	9.67	.55	1.87	.01	.01	17.55	17.63	9.63
25	37451.	2.8	1040	-.093	-.202	-.039	.00	9.80	1.05	1.93	.03	.02	17.38	17.50	3.47
26	37452.	3.2	1080	.016	.007	-.042	.00	10.64	1.39	2.11	.05	.04	17.23	17.37	3.62
27	37453.	3.5	1180	.057	.076	-.044	.00	13.26	1.65	2.60	.06	.04	17.28	17.41	3.21
28	37454.	5.7	1620	.111	.111	-.005	.00	19.15	1.63	3.78	.04	.02	17.30	17.40	3.67
29	37455.	8.3	1780	.103	.081	.108	.00	19.66	1.23	3.90	.02	.01	17.28	17.37	5.25
30	37456.	10.2	2300	.076	.035	.164	.00	25.41	.86	5.18	.01	.00	17.20	17.27	4.87
31	37457.	11.7	2200	.062	.075	.192	.00	23.18	.79	4.85	.00	.00	16.99	17.06	5.96
32	37458.	12.9	2420	.048	.057	.167	.00	20.65	.58	4.35	.00	.00	16.91	16.97	7.35
33	37459.	13.8	2240	.025	.021	.035	.00	14.62	.33	3.04	.00	.00	16.81	16.87	11.22
34	37460.	14.0	1420	-.001	.003	-.002	.00	10.91	.19	2.20	.00	.00	16.75	16.81	15.81
35	37461.	13.7	1140	-.029	-.031	-.012	.00	8.72	.15	1.73	.00	.00	16.71	16.79	19.64
36	37462.	12.7	1180	-.072	-.052	-.003	.00	9.09	.21	1.78	.00	.00	16.67	16.74	17.69
37	37463.	10.6	1160	-.111	-.112	-.015	.00	10.20	.41	2.03	.01	.00	16.60	16.68	12.89
38	37464.	7.9	1140	-.117	-.141	-.006	.00	8.82	.75	1.79	.02	.02	16.41	16.51	10.68
39	37465.	5.4	1160	-.108	-.127	-.011	.00	9.93	1.69	2.00	.08	.07	16.12	16.29	6.31
40	37466.	3.1	1240	-.124	-.102	-.007	.00	11.39	2.97	2.25	.19	.13	15.67	15.81	3.05
41	37467.	.0	980	-.072	-.102	-.007	.00	9.07	2.52	1.78	.16	.15	15.53	15.68	.00
42	37468.	.0	1180	.000	-.032	-.008	.00	11.50	3.07	2.27	.17	.12	15.64	15.75	.00
43	37469.	.0	900	.000	-.004	-.010	.00	8.79	1.69	1.77	.07	.06	15.93	16.10	.00
44	37470.	.0	880	.000	-.002	-.011	.00	8.15	.83	1.69	.03	.03	16.12	16.23	.00
45	37471.	.0	920	.000	-.002	-.010	.00	8.90	.45	1.86	.01	.01	16.17	16.24	.00
46	37472.	.0	900	.000	-.003	-.011	.00	8.57	.19	1.79	.01	.00	16.16	16.23	.00
47	37473.	.0	940	.000	-.001	-.012	.00	8.83	.20	1.84	.00	.00	16.17	16.23	.00
48	37474.	.0	1000	.000	-.003	-.006	.00	9.52	.16	1.98	.00	.00	16.11	16.17	.00
49	37475.	.0	840	.000	-.002	-.011	.00	8.15	.14	1.69	.00	.00	16.13	16.19	.00
50	37476.	.0	940	.000	-.001	-.013	.00	9.14	.16	1.89	.00	.00	16.07	16.13	.00
51	37477.	.0	880	.000	-.003	-.011	.00	8.53	.19	1.74	.00	.00	16.08	16.14	.00
52	37478.	.0	920	.065	.003	-.011	.00	8.96	.25	1.82	.00	.00	16.08	16.14	.00

53	37479.	2.9	1400	.159	.093	-.007	.00	23.18	.79	4.71	.01	.00	16.08	16.14	1.51
54	37480.	6.9	2580	.194	.284	-.014	.00	39.45	1.34	8.07	.01	.00	16.07	16.13	2.13
55	37481.	11.4	2920	.175	.190	-.006	.00	41.87	1.42	8.73	.01	.00	16.05	16.11	3.23
56	37482.	14.6	3340	.146	.170	.011	.00	45.38	1.28	9.52	.00	.00	16.04	16.10	3.81
57	37483.	17.8	3660	.135	.152	-.016	.00	43.26	1.22	9.08	.00	.00	16.04	16.10	4.86
58	37484.	20.5	3500	.096	.102	-.020	.00	46.80	1.32	9.82	.00	.00	15.97	16.04	5.19
59	37485.	22.0	2960	.065	.089	.021	.00	36.67	1.04	7.65	.00	.00	15.98	16.04	7.14
60	37486.	23.4	2760	.044	.081	-.009	.00	29.43	1.00	6.10	.00	.00	15.92	15.98	9.52
61	37487.	23.9	2400	.010	.043	-.009	.00	24.38	.83	5.08	.00	.00	15.91	15.97	11.67
62	37488.	23.8	1900	-.003	.010	-.007	.00	14.29	.49	2.98	.00	.00	15.84	15.91	19.83
63	37489.	23.8	1560	-.014	.020	-.029	.00	10.91	.31	2.28	.00	.00	15.85	15.91	25.93
64	37490.	23.2	1360	-.065	-.055	-.034	.00	9.73	.22	2.02	.00	.00	15.86	15.91	28.54
65	37491.	20.9	1220	-.092	-.136	-.010	.00	8.89	.25	1.83	.00	.00	15.86	15.92	28.34
66	37492.	19.1	1180	-.057	-.064	-.009	.00	9.06	.31	1.87	.00	.00	15.86	15.92	25.48
67	37493.	18.4	1380	-.013	-.044	.000	.00	8.85	.45	1.83	.00	.00	15.85	15.91	24.92
68	37494.	18.6	1840	.026	.039	-.005	.00	20.44	.81	4.26	.00	.00	15.84	15.89	10.80
69	37495.	19.6	2160	.028	.077	-.004	.00	23.65	.80	4.96	.00	.00	15.83	15.89	9.78
70	37496.	19.8	1920	.025	.070	.014	.00	21.69	.49	4.55	.00	.00	15.84	15.89	10.80
71	37497.	20.7	2460	.046	.046	.011	.00	26.33	.60	5.53	.00	.00	15.84	15.89	9.28
72	37498.	21.8	2220	.024	.086	-.009	.00	21.48	.36	4.54	.00	.00	15.83	15.88	11.92
73	37499.	21.7	2080	-.012	-.016	-.016	.00	12.48	.21	2.65	.00	.00	15.75	15.81	20.29
74	37500.	21.3	1960	-.028	-.018	-.012	.00	11.20	.19	2.38	.00	.00	15.75	15.81	22.17
75	37501.	20.5	1620	-.065	-.024	-.007	.00	9.10	.15	1.91	.00	.00	15.69	15.75	26.55
76	37502.	18.4	1680	-.148	-.134	-.003	.00	10.69	.18	2.19	.00	.00	15.74	15.79	20.91
77	37503.	14.0	1360	-.192	-.242	-.034	.00	9.81	.17	1.98	.00	.00	15.75	15.81	17.56
78	37504.	10.0	1040	-.135	-.191	.000	.00	9.18	.16	1.85	.00	.00	15.75	15.81	13.40
79	37505.	8.1	1160	-.071	-.097	-.037	.00	8.44	.19	1.72	.00	.00	15.74	15.79	11.70
80	37506.	6.9	1300	-.103	-.071	-.026	.00	9.56	.27	1.99	.01	.00	15.68	15.75	8.56
81	37507.	3.6	1040	-.157	-.175	-.016	.00	9.32	.37	1.98	.01	.01	15.69	15.76	4.44
82	37508.	.0	840	-.081	-.157	-.025	.00	7.90	.31	1.68	.01	.01	15.72	15.79	.00
83	37509.	.0	860	.000	.000	-.021	.00	8.66	.39	1.82	.02	.02	15.69	15.78	.00
84	37510.	.0	940	.054	.025	-.026	.00	9.91	.39	2.05	.02	.02	15.66	15.73	.00
85	37511.	2.4	1460	.134	.102	-.027	.00	18.78	.64	3.89	.04	.01	15.68	15.76	1.50
86	37512.	5.9	2180	.147	.177	-.023	.00	26.97	.76	5.59	.03	.01	15.72	15.79	2.58
87	37513.	8.8	2360	.124	.140	-.018	.00	26.35	.60	5.50	.01	.00	15.69	15.75	3.97
88	37514.	11.3	2540	.101	.095	-.038	.00	26.22	.44	5.54	.00	.00	15.70	15.75	5.06
89	37515.	13.2	3100	.087	.074	-.023	.00	30.39	.52	6.42	.00	.00	15.63	15.69	5.12
90	37516.	15.1	3160	.088	.105	-.021	.00	32.53	.55	6.87	.00	.00	15.63	15.69	5.45
91	37517.	17.1	2800	.074	.074	-.031	.00	34.40	.58	7.27	.00	.00	15.56	15.62	5.84
92	37518.	18.3	2500	.055	.072	-.007	.00	29.57	.50	6.25	.00	.00	15.56	15.62	7.28
93	37519.	19.5	2500	.054	.051	-.002	.00	28.81	.49	6.09	.00	.00	15.56	15.62	7.96
94	37520.	20.7	2540	.047	.052	.007	.00	26.38	.45	5.57	.00	.00	15.56	15.62	9.23
95	37521.	21.6	2540	.043	.053	-.007	.00	26.18	.44	5.50	.00	.00	15.57	15.62	9.74
96	37522.	22.6	2480	.042	.054	-.018	.00	25.99	.44	5.49	.00	.00	15.56	15.62	10.22
97	37523.	23.4	2360	.035	.046	-.028	.00	28.04	.48	5.93	.00	.00	15.49	15.54	9.81
98	37524.	24.1	2300	.034	.041	-.008	.00	28.21	.48	5.96	.00	.00	15.49	15.54	10.05
99	37525.	24.9	2160	.040	.054	-.010	.00	24.42	.41	5.16	.00	.00	15.49	15.54	11.98
100	37526.	25.9	2300	.027	.026	-.022	.00	26.91	.46	5.69	.00	.00	15.49	15.54	11.30
101	37527.	26.1	2400	.010	.015	-.005	.00	24.79	.42	5.17	.00	.00	15.50	15.56	12.52
102	37528.	26.3	1940	.011	.008	-.006	.00	19.61	.33	4.09	.00	.00	15.50	15.56	15.97
103	37529.	26.6	2040	.006	.017	-.005	.00	14.68	.25	3.06	.01	.00	15.49	15.54	21.49
104	37530.	26.6	1780	.009	.002	-.021	.00	17.53	.30	3.71	.01	.01	15.45	15.51	17.73
105	37531.	27.0	2000	.025	.022	-.030	.00	19.25	.33	4.07	.02	.01	15.45	15.51	16.35
106	37532.	27.7	2120	.022	.024	-.013	.00	21.06	.36	4.45	.02	.01	15.44	15.50	15.36
107	37533.	27.0	[illegible]	[illegible]	[illegible]	[illegible]	[illegible]	[illegible]	[illegible]	[illegible]	[illegible]	[illegible]	[illegible]	[illegible]	[illegible]

108	37534.	28.4	2040	.022	.012	-.009	.00	19.28	.33	4.05	.00	.00	15.49	15.54	17.38
109	37535.	28.9	2060	.003	.010	-.005	.00	17.30	.29	3.61	.00	.00	15.50	15.56	19.85
110	37536.	28.5	1980	.002	-.001	-.013	.00	17.25	.29	3.58	.00	.00	15.51	15.56	19.80
111	37537.	29.0	1800	.009	.006	-.021	.00	16.23	.28	3.37	.00	.00	15.51	15.56	21.36
112	37538.	28.9	1980	.008	-.004	-.008	.00	17.79	.30	3.69	.00	.00	15.51	15.56	19.45
113	37539.	29.3	2100	.031	.009	-.009	.00	25.41	.43	5.30	.00	.00	15.50	15.56	13.71
114	37540.	30.3	2240	.035	.032	-.017	.00	27.61	.63	5.76	.00	.00	15.50	15.56	13.05
115	37541.	30.8	2560	.041	.044	-.017	.00	30.72	.70	6.45	.00	.00	15.50	15.54	11.85
116	37542.	32.1	2500	.048	.049	-.007	.00	30.10	.68	6.32	.00	.00	15.50	15.54	12.60
117	37543.	32.9	2360	.033	.043	-.006	.00	27.78	.63	5.83	.00	.00	15.50	15.54	14.00
118	37544.	33.5	2840	.025	.039	-.025	.00	30.63	.69	6.48	.00	.00	15.49	15.54	12.85
119	37545.	34.0	2480	.014	.027	-.001	.00	21.82	.37	4.61	.00	.00	15.49	15.54	18.30
120	37546.	34.1	2100	-.014	-.013	-.022	.00	13.69	.23	2.89	.00	.00	15.49	15.54	29.29
121	37547.	33.4	1960	-.022	-.008	-.005	.00	11.31	.13	2.37	.00	.00	15.50	15.56	34.90
122	37548.	33.2	2020	-.008	-.014	-.014	.00	12.14	.21	2.55	.00	.00	15.50	15.56	32.31
123	37549.	33.0	1780	-.016	-.007	-.029	.00	11.29	.19	2.37	.00	.00	15.50	15.56	34.59
124	37550.	32.5	1980	-.012	.003	-.020	.00	14.15	.24	2.95	.00	.00	15.44	15.49	27.31
125	37551.	32.5	2200	.003	.007	.005	.00	15.21	.26	3.17	.00	.00	15.44	15.49	25.44
126	37552.	32.6	2080	-.001	-.013	-.009	.00	14.80	.42	3.09	.00	.00	15.50	15.56	26.21
127	37553.	32.5	2060	-.006	-.006	-.006	.00	14.79	.42	3.09	.00	.00	15.50	15.56	26.12
128	37554.	32.3	1980	.003	-.011	-.027	.00	14.38	.41	3.00	.00	.00	15.50	15.56	26.75
129	37555.	32.6	2220	-.001	.010	.010	.00	15.85	.45	3.31	.00	.00	15.50	15.56	24.47
130	37556.	32.3	2020	-.002	-.019	.024	.00	14.19	.40	2.96	.00	.00	15.50	15.56	27.07
131	37557.	32.5	2000	.005	.003	-.007	.00	14.08	.40	2.96	.00	.00	15.49	15.54	27.30
132	37558.	32.5	1960	-.010	-.008	.003	.00	13.75	.31	2.89	.00	.00	15.50	15.54	27.96
133	37559.	32.1	2100	-.009	-.007	.003	.00	15.47	.35	3.25	.00	.00	15.50	15.54	24.52
134	37560.	32.1	2040	.008	.002	-.006	.00	17.89	.41	3.78	.00	.00	15.49	15.54	21.10
135	37561.	32.4	2280	.009	.009	.012	.00	20.48	.46	4.33	.00	.00	15.48	15.54	18.59
136	37562.	32.5	2000	-.010	.006	-.016	.00	12.86	.22	2.70	.00	.00	15.49	15.54	29.86
137	37563.	32.0	1840	-.022	-.015	-.018	.00	10.59	.18	2.18	.00	.00	15.51	15.56	36.36
138	37564.	31.6	1480	-.014	-.025	.006	.00	10.45	.12	2.12	.00	.00	15.52	15.57	36.84
139	37565.	31.4	1460	-.016	-.021	.007	.00	10.33	.18	2.06	.00	.00	15.55	15.60	37.80
140	37566.	30.9	1520	-.021	-.013	.002	.00	9.60	.16	1.90	.00	.00	15.63	15.69	40.31
141	37567.	30.5	1420	-.015	-.022	-.011	.00	9.37	.16	1.85	.00	.00	15.63	15.69	40.82
142	37568.	30.2	1400	-.015	-.023	.002	.00	9.86	.22	1.95	.00	.00	15.71	15.76	38.39
143	37569.	29.8	1480	-.010	-.037	-.011	.00	9.70	.22	1.93	.00	.00	15.77	15.84	38.33
144	37570.	29.8	1540	-.012	-.004	-.001	.00	9.77	.17	1.95	.00	.00	15.85	15.91	37.99
145	37571.	29.3	1520	-.012	-.020	-.012	.00	10.67	.18	2.13	.00	.00	15.85	15.91	34.22
146	37572.	29.2	1520	-.002	-.021	.002	.00	10.28	.23	2.08	.00	.00	15.89	15.95	34.96
147	37573.	29.2	1860	.009	-.003	-.014	.00	17.09	.39	3.50	.01	.00	15.86	15.92	20.68
148	37574.	29.6	2200	-.004	.009	-.008	.00	14.12	.32	2.96	.01	.01	15.87	15.94	24.68
149	37575.	29.0	1620	-.033	-.016	-.019	.00	11.19	.19	2.35	.01	.01	15.87	15.94	30.49
150	37576.	28.2	1340	-.062	-.073	-.010	.00	9.03	.15	1.87	.01	.00	15.83	15.89	37.23
151	37577.	26.3	1540	-.094	-.101	.010	.00	10.19	.17	2.07	.00	.00	15.80	15.87	31.48
152	37578.	24.0	1560	-.109	-.097	.005	.00	10.75	.18	2.18	.00	.00	15.81	15.87	27.31
153	37579.	21.5	1300	-.109	-.127	-.010	.00	9.35	.16	1.94	.00	.00	15.72	15.78	27.56
154	37580.	19.3	1380	-.114	-.115	.001	.00	10.71	.12	2.25	.00	.00	15.64	15.69	21.29
155	37581.	16.5	1280	-.133	-.129	-.004	.00	9.11	.10	1.91	.00	.00	15.57	15.63	21.45
156	37582.	13.4	1360	-.130	-.145	-.001	.00	9.56	.16	2.01	.00	.00	15.57	15.62	16.61
157	37583.	10.8	1220	-.139	-.136	-.008	.00	9.99	.17	2.12	.00	.00	15.53	15.59	12.60
158	37584.	7.3	1120	-.138	-.166	-.010	.00	8.57	.15	1.83	.01	.01	15.51	15.57	9.87
159	37585.	4.8	1160	-.091	-.127	-.011	.00	10.02	.34	2.16	.02	.02	15.35	15.43	5.39
160	37586.	3.3	1080	-.008	-.047	-.008	.00	9.83	.39	2.10	.03	.03	15.30	15.38	3.84
161	37587.	4.4	1340	.085	.061	-.013	.00	14.63	.58	3.09	.05	.02	15.33	15.41	3.48
162	37588.	7.1	2120	.129	.137	-.015	.00	26.23	.74	5.51	.05	.01	15.41	15.47	3.14

163	37589.	10.1	2300	.132	.135	-.003	.00	25.40	.43	5.33	.02	.00	15.47	15.53	4.68
164	37590.	12.9	2560	.108	.114	-.006	.00	29.49	.50	6.19	.01	.00	15.42	15.49	5.15
165	37591.	14.8	2900	.087	.091	-.016	.00	32.07	.54	6.74	.01	.00	15.42	15.49	5.46
166	37592.	16.7	2540	.085	.097	-.004	.00	32.17	.55	6.76	.00	.00	15.43	15.49	6.12
167	37593.	18.5	2500	.078	.077	.007	.00	30.98	.53	6.51	.00	.00	15.43	15.49	7.07
168	37594.	20.1	2540	.070	.074	.007	.00	30.81	.35	6.47	.00	.00	15.43	15.49	7.71
169	37595.	21.6	2500	.054	.059	.006	.00	28.44	.48	5.97	.00	.00	15.43	15.49	8.96
170	37596.	22.5	2600	.036	.039	.011	.00	27.30	.46	5.74	.00	.00	15.43	15.49	9.73
171	37597.	23.1	2840	.042	.045	-.002	.00	32.68	.56	6.86	.00	.00	15.43	15.49	8.37
172	37598.	24.3	2220	.051	.033	.021	.00	28.17	.48	5.92	.00	.00	15.36	15.41	10.21
173	37599.	25.4	2420	.063	.077	-.005	.00	31.87	.54	6.70	.00	.00	15.36	15.41	9.41
174	37600.	27.1	2460	.063	.045	.015	.00	32.64	.55	6.86	.00	.00	15.36	15.41	9.81
175	37601.	28.1	2460	.061	.063	.001	.00	33.23	.56	7.03	.00	.00	15.36	15.41	9.95
176	37602.	29.8	2580	.060	.060	-.010	.00	33.80	.57	7.15	.00	.00	15.36	15.41	10.34
177	37603.	30.8	2640	.052	.055	-.019	.00	33.16	.56	7.01	.01	.00	15.35	15.40	10.88
178	37604.	32.0	2620	.036	.056	.009	.00	30.53	.52	6.41	.01	.00	15.35	15.40	12.38
179	37605.	32.3	2400	.018	.028	.005	.00	21.79	.37	4.55	.01	.00	15.35	15.41	17.62
180	37606.	32.8	2240	.021	-.001	-.015	.00	18.78	.32	3.89	.01	.00	15.36	15.41	20.92
181	37607.	33.2	2360	.027	.015	.010	.00	27.29	.62	5.66	.01	.00	15.37	15.43	14.56
182	37608.	34.0	2900	.048	.037	.002	.00	41.45	.94	8.60	.00	.00	15.37	15.43	9.83
183	37609.	35.3	3000	.053	.065	-.003	.00	42.15	.95	8.85	.00	.00	15.43	15.49	9.90
184	37610.	36.4	2960	.040	.041	.001	.00	34.00	.58	7.19	.00	.00	15.42	15.47	12.57
185	37611.	37.1	2640	.013	.023	.000	.00	22.60	.38	4.78	.00	.00	15.42	15.47	19.28
186	37612.	36.9	2180	-.009	.003	.010	.00	14.70	.25	3.11	.00	.00	15.42	15.47	29.51
187	37613.	36.7	2060	-.018	-.007	.006	.00	13.76	.23	2.91	.00	.00	15.42	15.47	31.34
188	37614.	36.1	2420	-.011	-.012	.029	.00	12.51	.21	2.64	.00	.00	15.42	15.47	33.93
189	37615.	36.2	1880	-.009	-.019	.013	.00	11.17	.13	2.35	.00	.00	15.36	15.41	38.31
190	37616.	35.8	2080	-.015	-.016	.002	.00	13.00	.22	2.71	.00	.00	15.36	15.41	32.69
191	37617.	35.6	2180	-.008	-.004	-.012	.00	13.40	.23	2.80	.00	.00	15.37	15.41	31.58
192	37618.	35.4	2260	-.010	.006	-.054	.00	14.08	.24	2.94	.00	.00	15.37	15.41	29.92
193	37619.	35.1	2120	-.005	-.030	-.024	.00	12.75	.22	2.68	.00	.00	15.37	15.41	32.60
194	37620.	35.2	2100	-.012	-.014	.009	.00	13.19	.22	2.75	.00	.00	15.37	15.43	31.76
195	37621.	34.6	2300	-.009	-.019	.028	.00	16.51	.28	3.47	.00	.00	15.36	15.41	24.78
196	37622.	34.8	2220	-.005	.006	.025	.00	14.09	.32	2.98	.00	.00	15.35	15.41	29.00
197	37623.	34.4	1900	-.020	-.014	.070	.00	10.61	.18	2.24	.00	.00	15.36	15.41	38.03
198	37624.	33.9	1820	-.016	-.013	.049	.00	11.13	.19	2.34	.00	.00	15.36	15.41	36.06
199	37625.	33.7	1740	.000	-.028	.038	.00	10.72	.18	2.24	.00	.00	15.44	15.49	37.37
200	37626.	33.9	1940	-.001	-.002	.053	.00	15.31	.26	3.20	.00	.00	15.44	15.49	26.37
201	37627.	33.6	2140	-.003	.020	.044	.00	18.01	.31	3.76	.00	.00	15.44	15.50	22.22
202	37628.	33.8	2340	.005	-.036	.054	.00	18.55	.32	3.92	.00	.00	15.43	15.49	21.41
203	37629.	33.8	2060	-.013	.009	.044	.00	12.09	.21	2.54	.00	.00	15.43	15.49	33.11
204	37630.	33.2	1900	-.017	-.032	.020	.00	11.13	.19	2.29	.00	.00	15.45	15.50	36.01
205	37631.	33.1	1540	-.010	-.021	.047	.00	10.89	.19	2.20	.00	.00	15.47	15.53	37.39
206	37632.	32.8	1460	-.016	-.004	.056	.00	11.91	.27	2.39	.00	.00	15.48	15.53	34.11
207	37633.	32.4	2160	-.001	.019	.008	.00	17.64	.30	3.56	.00	.00	15.47	15.53	22.57
208	37634.	32.8	2160	.015	.017	.075	.00	18.90	.32	3.87	.00	.00	15.53	15.59	21.04
209	37635.	33.0	2200	.003	.040	.057	.79	19.20	.33	4.03	.00	.00	15.50	15.56	20.34
210	37636.	32.9	2160	-.010	-.014	.050	1.78	14.35	.16	3.03	.00	.00	15.56	15.62	26.95
211	37637.	32.6	2380	-.005	-.021	.001	3.21	13.81	.08	2.90	.00	.00	15.57	15.63	27.94
212	37638.	32.7	1500	-.102	-.032	.025	2.36	9.34	.11	1.91	.00	.00	15.60	15.66	42.47
213	37639.	28.1	1480	-.303	-.230	.049	.66	10.01	.11	2.00	.00	.00	15.56	15.62	35.05
214	37640.	19.4	1300	-.445	-.452	.013	.00	9.63	.11	1.89	.00	.00	15.58	15.63	25.44
215	37641.	8.6	1260	-.442	-.530	.038	.00	9.30	.16	1.87	.00	.00	15.54	15.60	11.46
216	37642.	.0	860	-.197	-.322	.044	.00	[illegible]	[illegible]	[illegible]	[illegible]	[illegible]	[illegible]	[illegible]	[illegible]

218	37644.	.0	1100	.000	-.004	.037	.00	10.98	.31	2.35	.03	.02	15.56	15.63	.00
219	37645.	.0	1020	.000	-.005	.035	.00	9.90	.22	2.12	.02	.02	15.56	15.63	.00
220	37646.	.0	1020	.000	.001	.033	.00	9.75	.17	2.06	.01	.01	15.62	15.69	.00
221	37647.	.0	1020	.000	-.004	.036	.00	10.36	.18	2.18	.01	.01	15.59	15.66	.00
222	37648.	.0	960	.000	-.007	.039	.00	9.45	.11	1.97	.00	.00	15.55	15.62	.00
223	37649.	.0	940	.000	-.005	.035	.00	8.98	.10	1.87	.00	.00	15.56	15.62	.00
224	37650.	.0	860	.000	-.004	.037	.00	8.35	.14	1.74	.00	.00	15.56	15.62	.00
225	37651.	.0	1100	.000	-.005	.039	.00	10.75	.12	2.24	.00	.00	15.50	15.56	.00
226	37652.	.0	900	.000	-.002	.036	.00	8.72	.10	1.82	.00	.00	15.51	15.56	.00
227	37653.	.0	960	.000	-.004	.035	.00	9.48	.11	1.98	.00	.00	15.51	15.56	.00
228	37654.	.0	940	.000	-.008	.032	.00	9.29	.11	1.93	.00	.00	15.51	15.56	.00
229	37655.	.0	940	.000	-.006	.032	.00	9.49	.11	1.95	.00	.00	15.52	15.57	.00
230	37656.	.0	800	.000	-.003	.033	.00	8.46	.10	1.73	.00	.00	15.53	15.57	.00
231	37657.	.0	820	.000	-.001	.035	.00	8.52	.15	1.74	.00	.00	15.52	15.57	.00
232	37658.	.0	860	.000	-.001	.039	.00	8.71	.10	1.78	.00	.00	15.53	15.57	.00
233	37659.	.0	900	.000	-.004	.036	.00	9.07	.15	1.86	.00	.00	15.52	15.57	.00
234	37660.	.0	760	.000	-.005	.037	.00	7.49	.13	1.53	.00	.00	15.45	15.51	.00
235	37661.	.0	880	.000	-.006	.038	.00	8.74	.15	1.80	.00	.00	15.45	15.50	.00
236	37662.	.0	960	.000	-.005	.038	.00	9.39	.16	1.94	.00	.00	15.45	15.50	.00
237	37663.	.0	840	.000	-.003	.037	.00	8.31	.14	1.72	.00	.00	15.44	15.50	.00
238	37664.	.0	820	.000	-.008	.035	.00	8.31	.14	1.72	.00	.00	15.44	15.50	.00
239	37665.	.0	780	.000	-.007	.038	.00	7.63	.13	1.58	.00	.00	15.44	15.50	.00
240	37666.	.0	900	.000	-.003	.036	.00	8.93	.15	1.85	.00	.00	15.45	15.50	.00
241	37667.	.0	800	.000	-.006	.038	.00	7.86	.13	1.63	.00	.00	15.45	15.50	.00
242	37668.	.0	840	.000	-.001	.041	.00	8.36	.19	1.73	.00	.00	15.45	15.50	.00
243	37669.	.0	860	.000	-.006	.036	.00	8.64	.15	1.79	.00	.00	15.45	15.50	.00
244	37670.	.0	900	.000	.000	.036	.00	8.91	.20	1.85	.00	.00	15.45	15.50	.00
245	37671.	.0	860	.000	-.004	.034	.00	8.30	.19	1.72	.00	.00	15.45	15.50	.00
246	37672.	.0	880	.000	-.003	.037	.00	8.64	.20	1.76	.00	.00	15.46	15.51	.00
247	37673.	.0	880	.050	.018	.046	.00	9.64	.22	1.95	.00	.00	15.47	15.53	.00
248	37674.	2.2	1620	.175	.119	.038	.00	25.06	.71	5.06	.00	.00	15.54	15.59	1.07
249	37675.	7.7	2540	.231	.267	.022	.00	38.69	1.10	7.87	.00	.00	15.53	15.59	2.42
250	37676.	12.3	3080	.202	.217	-.049	.00	47.22	1.07	9.85	.01	.00	15.56	15.62	3.10
251	37677.	16.5	3380	.181	.152	-.197	.00	49.96	.85	10.56	.02	.00	15.61	15.66	3.88
252	37678.	20.3	4000	.162	.126	-.256	.00	59.85	1.36	12.57	.04	.00	15.60	15.66	3.99
253	37679.	23.6	3480	.147	.116	-.244	.00	62.14	1.41	13.05	.05	.01	15.53	15.59	4.47
254	37680.	26.7	3620	.135	.143	-.241	.00	64.23	1.45	13.49	.05	.01	15.53	15.59	4.89
255	37681.	29.5	3820	.137	.155	-.200	.00	68.06	1.54	14.29	.03	.00	15.48	15.53	5.11
256	37682.	32.7	3940	.141	.136	-.264	.00	73.02	1.65	15.44	.03	.00	15.41	15.46	5.25
257	37683.	35.7	4160	.126	.164	-.194	1.87	74.17	2.10	15.68	.03	.00	15.41	15.46	5.64
258	37684.	38.2	4160	.119	.141	-.094	1.87	74.37	2.53	15.72	.06	.01	15.31	15.37	6.00
259	37685.	40.9	4620	.113	.134	.005	3.02	79.84	3.17	16.77	.10	.01	15.29	15.35	6.01
260	37686.	43.2	4520	.088	.106	.052	3.41	77.76	3.08	16.34	.11	.01	15.28	15.35	6.49
261	37687.	44.8	4440	.065	.118	.059	3.92	73.29	2.49	15.40	.10	.01	15.29	15.35	7.15
262	37688.	46.0	4140	.059	.117	.037	4.65	72.67	2.47	15.27	.08	.01	15.30	15.37	7.43
263	37689.	47.4	3660	.055	.102	.063	4.53	63.18	2.15	13.27	.06	.01	15.31	15.37	8.81
264	37690.	48.5	3800	.051	.108	.043	3.33	66.71	2.27	14.01	.07	.01	15.30	15.37	8.52
265	37691.	49.6	3780	.053	.066	.008	2.12	67.10	3.42	14.01	.15	.02	15.25	15.33	8.65
266	37692.	50.8	3780	.056	.049	.093	1.72	66.28	7.16	13.21	.52	.06	14.97	15.12	8.99
267	37693.	52.1	3840	.073	.070	.087	.93	67.58	14.69	12.46	1.45	.18	14.30	14.46	8.76
268	37694.	54.0	4220	.094	.121	.044	1.28	77.17	21.71	13.49	2.36	.27	13.86	14.03	7.77
269	37695.	56.2	4280	.096	.114	.014	1.51	75.65	28.77	12.49	3.69	.46	13.03	13.16	7.60
270	37696.	58.2	4640	.081	.111	-.048	1.48	87.34	31.68	14.66	3.74	.40	13.26	13.34	7.01
271	37697.	59.8	4260	.085	.089	-.009	1.70	74.18	20.43	13.17	1.94	.23	14.00	14.11	9.13
272	37698.	61.9	4280	.083	.078	-.007	1.50	75.30	13.31	14.50	.92	.10	14.68	14.87	9.63

273	37699.	63.4	4160	.052	.090	-.019	1.80	70.24	5.98	14.38	.27	.03	15.10	15.19	10.64
274	37700.	64.2	4060	.044	.052	.054	1.75	72.58	5.35	14.96	.19	.02	15.16	15.25	10.45
275	37701.	65.4	3120	.031	.075	.065	2.78	48.40	2.75	9.98	.06	.01	15.24	15.31	16.12
276	37702.	65.6	2660	.003	.005	.024	1.38	38.81	1.32	8.00	.02	.00	15.28	15.34	20.29
277	37703.	65.5	2900	-.007	.041	-.017	1.16	34.82	.99	7.18	.01	.00	15.30	15.35	22.65
278	37704.	65.3	2800	-.008	-.040	.013	.61	31.57	.72	6.51	.00	.00	15.31	15.35	24.91
279	37705.	65.2	2740	-.009	-.012	.034	.00	24.81	.56	5.15	.00	.00	15.30	15.35	31.44
280	37706.	64.9	2760	-.010	.007	.051	.00	24.66	.56	5.12	.00	.00	15.30	15.35	31.50
281	37707.	64.8	2620	-.011	-.012	.016	.00	22.45	.51	4.69	.00	.00	15.30	15.35	34.30
282	37708.	64.4	2640	-.010	-.001	-.018	.00	22.92	.52	4.82	.00	.00	15.29	15.34	33.20
283	37709.	64.3	2980	-.003	.028	.027	.00	25.64	.58	5.42	.00	.00	15.29	15.34	29.46
284	37710.	64.3	2820	-.004	.004	-.013	.00	25.15	.57	5.32	.00	.00	15.28	15.34	29.99
285	37711.	64.1	2860	-.010	-.022	.032	.00	20.53	.58	4.34	.00	.00	15.28	15.34	36.64
286	37712.	63.8	2880	-.017	-.005	.013	.00	19.95	.56	4.22	.00	.00	15.28	15.34	37.54
287	37713.	63.4	2760	-.024	-.017	-.012	.00	20.48	.58	4.33	.00	.00	15.28	15.34	36.30
288	37714.	62.8	2760	-.009	.014	.027	.00	20.45	.58	4.32	.00	.00	15.28	15.34	36.06
289	37715.	63.0	2720	-.004	-.030	-.023	.00	19.24	.65	4.07	.01	.00	15.26	15.33	38.32
290	37716.	62.6	2760	-.022	-.010	.023	.00	17.64	.90	3.73	.01	.01	15.24	15.31	41.43
291	37717.	62.0	2900	-.022	-.027	.021	-.91	15.90	.90	3.36	.01	.01	15.23	15.30	45.52
292	37718.	61.7	2840	-.017	-.038	-.008	-.59	17.06	.97	3.58	.02	.01	15.24	15.31	42.42
293	37719.	61.3	2740	-.015	-.020	-.027	-1.44	18.04	.61	3.77	.01	.00	15.27	15.33	40.24
294	37720.	61.0	2540	-.013	-.022	.015	-1.24	17.97	.41	3.75	.00	.00	15.29	15.34	40.33
295	37721.	60.7	2600	-.021	-.052	-.013	-1.37	18.29	.31	3.82	.00	.00	15.30	15.35	39.46
296	37722.	60.1	2820	-.017	-.013	.037	.00	19.76	.34	4.12	.00	.00	15.30	15.35	36.17
297	37723.	59.9	2540	-.010	-.037	.005	.00	17.68	.30	3.69	.00	.00	15.30	15.35	40.32
298	37724.	59.7	2600	-.016	-.021	.033	.00	18.56	.32	3.88	.00	.00	15.30	15.35	38.22
299	37725.	59.2	2360	-.023	-.001	.014	.00	16.93	.29	3.54	.00	.00	15.30	15.35	41.59
300	37726.	58.7	2780	-.010	.002	-.018	.00	27.29	.46	5.70	.00	.00	15.30	15.35	25.56
301	37727.	58.8	2460	.001	.005	.042	.00	27.35	.31	5.71	.00	.00	15.30	15.35	25.57
302	37728.	58.7	2660	.000	.025	-.010	.00	29.40	.33	6.18	.00	.00	15.29	15.34	23.59
303	37729.	58.8	2580	.005	.002	.019	.00	33.40	.57	7.02	.00	.00	15.29	15.34	20.81
304	37730.	58.9	2380	.002	-.009	.019	.00	31.47	.53	6.65	.00	.00	15.29	15.34	22.00
305	37731.	58.9	2540	.005	.024	.008	.56	32.98	.75	6.97	.02	.00	15.27	15.33	20.91
306	37732.	59.2	2680	.005	.030	-.010	1.14	33.91	1.15	7.12	.03	.01	15.24	15.31	20.49
307	37733.	59.1	2560	-.009	-.009	.041	1.80	31.29	1.24	6.58	.03	.01	15.24	15.30	22.17
308	37734.	58.8	2640	-.017	.008	.034	2.01	25.44	1.01	5.34	.02	.01	15.24	15.31	27.14
309	37735.	58.4	2620	-.026	-.005	.024	1.52	25.16	.86	5.25	.02	.00	15.26	15.33	27.47
310	37736.	57.7	2440	-.025	.004	.033	2.01	23.34	.66	4.87	.01	.00	15.28	15.34	29.34
311	37737.	57.3	2460	-.024	-.023	.012	1.20	20.73	.59	4.33	.00	.00	15.29	15.34	32.83
312	37738.	56.6	2280	-.030	-.007	.017	.61	19.76	.45	4.13	.00	.00	15.30	15.35	34.06
313	37739.	55.9	2420	-.021	-.036	.013	.00	20.87	.47	4.36	.00	.00	15.30	15.35	31.88
314	37740.	55.7	2740	-.010	-.018	.005	.00	22.66	.39	4.73	.00	.00	15.30	15.35	29.24
315	37741.	55.5	2660	-.012	-.024	-.005	.00	22.55	.51	4.71	.00	.00	15.30	15.35	29.30
316	37742.	55.2	2560	-.009	-.001	.015	.00	22.25	.38	4.65	.00	.00	15.30	15.35	29.52
317	37743.	55.1	2300	.000	.023	.191	.00	19.69	.45	4.11	.00	.00	15.30	15.35	33.32
318	37744.	55.2	2640	-.007	-.025	.285	.00	22.24	.50	4.67	.00	.00	15.29	15.34	29.32
319	37745.	54.8	2480	-.018	-.039	.309	.00	16.11	.37	3.39	.00	.00	15.29	15.34	40.20
320	37746.	54.4	3100	-.014	-.018	.333	.00	16.76	.38	3.50	.00	.00	15.29	15.34	38.56
321	37747.	54.2	3260	-.004	.019	.327	.00	23.28	.53	4.86	.00	.00	15.29	15.34	27.68
322	37748.	54.2	2660	.000	-.008	.307	.00	20.69	.47	4.29	.00	.00	15.30	15.35	31.33
323	37749.	54.2	2680	.008	.014	.311	.00	22.71	.39	4.71	.00	.00	15.30	15.35	28.58
324	37750.	54.5	2860	.013	.002	.285	.00	34.30	.58	7.16	.00	.00	15.30	15.35	18.90
325	37751.	54.8	2580	.026	.039	.311	.00	39.05	.44	8.15	.00	.00	15.30	15.35	16.69
326	37752.	55.7	3160	.038	.020	.192	.00	55.41	.94	11.64	.01	.00	15.29	15.34	11.87

328	37754.	57.0	2580	.031	.067	-.038	1.42	49.34	.56	10.43	.00	.00	15.36	15.41	13.58
329	37755.	57.8	2520	.034	.049	-.063	1.50	48.46	.55	10.25	.00	.00	15.36	15.41	14.02
330	37756.	58.5	2540	.029	.065	-.020	1.80	49.97	.85	10.57	.01	.00	15.35	15.40	13.74
331	37757.	59.1	2620	.033	.019	-.101	1.57	51.58	.58	10.91	.02	.00	15.34	15.40	13.43
332	37758.	59.9	2480	.018	.036	-.037	1.15	47.11	.53	9.90	.03	.00	15.26	15.33	14.98
333	37759.	59.9	2340	.009	.033	-.050	.91	40.05	.68	8.42	.03	.01	15.26	15.31	17.60
334	37760.	60.3	2520	.016	.011	-.032	1.67	43.18	.73	9.07	.03	.01	15.26	15.31	16.43
335	37761.	60.7	2600	.002	.026	-.048	1.58	43.05	.73	9.05	.03	.00	15.26	15.33	16.58
336	37762.	60.4	2620	.000	.024	-.058	1.01	39.98	.91	8.40	.03	.01	15.26	15.31	17.77
337	37763.	60.7	2400	.002	.015	-.017	.69	36.74	.83	7.72	.03	.01	15.26	15.31	19.41
338	37764.	60.5	2580	.001	-.003	.061	.00	39.45	.89	8.24	.03	.00	15.27	15.33	18.17
339	37765.	60.7	2820	.009	-.013	.023	.00	43.56	1.23	9.10	.02	.00	15.27	15.33	16.52
340	37766.	60.9	2420	.008	-.023	.050	.00	37.50	1.06	7.88	.01	.00	15.27	15.33	19.14
341	37767.	61.0	2580	-.002	.004	.011	.00	40.50	1.15	8.51	.01	.00	15.28	15.34	17.78
342	37768.	60.8	2380	.004	-.007	.082	.00	36.96	1.05	7.77	.01	.00	15.28	15.34	19.41
343	37769.	61.2	2800	.021	.027	.030	.00	43.96	1.25	9.24	.01	.00	15.28	15.34	16.43
344	37770.	61.7	2660	.021	.013	.072	.00	41.52	1.18	8.72	.02	.00	15.27	15.33	17.51
345	37771.	62.1	2720	.017	.005	.044	.00	41.76	.95	8.78	.03	.01	15.26	15.31	17.50
346	37772.	62.5	2700	.015	.019	.050	.00	37.82	1.07	7.90	.03	.01	15.26	15.33	19.55
347	37773.	62.8	2700	.014	.003	.052	.00	32.15	.73	6.76	.02	.00	15.26	15.33	22.98
348	37774.	63.1	2700	.014	.023	.022	.00	31.90	.72	6.70	.01	.00	15.28	15.33	23.32
349	37775.	63.4	2760	.011	.002	.079	.00	26.13	.44	5.49	.00	.00	15.29	15.34	28.66
350	37776.	63.6	3000	-.001	-.012	.060	.00	26.12	.44	5.49	.00	.00	15.29	15.34	28.74
351	37777.	63.4	2560	-.001	-.006	.029	-1.10	19.99	.34	4.20	.00	.00	15.29	15.34	37.45
352	37778.	63.5	2700	.002	-.026	.046	-1.34	21.09	.36	4.43	.00	.00	15.29	15.34	35.59
353	37779.	63.5	2820	-.001	-.004	.004	-1.80	23.66	.40	4.97	.00	.00	15.29	15.34	31.70
354	37780.	63.5	2900	.004	-.016	.001	-1.87	23.42	.53	4.89	.00	.00	15.30	15.35	32.22
355	37781.	63.7	2800	.005	-.029	.060	-1.18	25.13	.43	5.25	.00	.00	15.30	15.35	30.13
356	37782.	63.7	3040	.005	-.003	.087	-.95	32.55	.74	6.84	.00	.00	15.29	15.34	23.13
357	37783.	63.9	2860	.004	.011	.047	.00	31.28	.53	6.57	.01	.00	15.29	15.34	24.12
358	37784.	63.9	3000	.001	.010	.067	.00	27.05	.46	5.68	.01	.00	15.28	15.34	27.87
359	37785.	63.9	2900	-.004	-.011	.052	-.54	23.39	.26	4.91	.01	.00	15.28	15.34	32.27
360	37786.	63.7	2980	-.010	-.029	.053	-1.26	22.41	.25	4.71	.01	.00	15.27	15.33	33.51
361	37787.	63.5	2720	-.008	-.024	-.012	-1.46	19.22	.33	4.04	.01	.01	15.26	15.31	38.86
362	37788.	63.4	2620	-.004	-.034	-.037	-1.18	15.89	.27	3.34	.01	.01	15.25	15.31	46.88
363	37789.	63.3	3060	-.005	-.006	-.067	-1.03	21.06	.36	4.40	.02	.01	15.26	15.33	35.56
364	37790.	63.1	3080	-.008	-.001	-.032	.00	25.68	.44	5.33	.01	.00	15.28	15.34	29.32
365	37791.	63.0	2980	.000	-.011	.022	.00	29.39	.50	6.14	.01	.00	15.29	15.34	25.47
366	37792.	63.1	2800	.002	.002	.022	.00	28.01	.48	5.85	.00	.00	15.30	15.35	26.80
367	37793.	63.1	2700	.001	.018	.026	.00	29.09	.49	6.11	.00	.00	15.29	15.34	25.63
368	37794.	63.2	2520	.001	.021	-.031	.00	27.42	.31	5.76	.00	.00	15.29	15.34	27.23
369	37795.	63.1	2600	-.002	.024	-.053	.00	28.25	.32	5.93	.00	.00	15.29	15.34	26.42
370	37796.	63.1	2700	-.008	-.019	-.029	.00	29.53	.33	6.20	.00	.00	15.29	15.34	25.25
371	37797.	62.8	2720	-.009	-.006	-.088	.00	29.17	.50	6.09	.00	.00	15.30	15.35	25.60
372	37798.	62.7	2920	-.006	.014	.001	.00	31.55	.54	6.63	.00	.00	15.29	15.34	23.49
373	37799.	62.5	2920	-.009	.012	-.062	.00	31.69	.36	6.66	.00	.00	15.29	15.34	23.32
374	37800.	62.3	2860	-.005	-.002	.010	.00	30.02	.51	6.31	.00	.00	15.29	15.34	24.53
375	37801.	62.3	2500	-.007	.014	.050	.00	26.74	.45	5.62	.00	.00	15.30	15.35	27.54
376	37802.	62.0	2500	-.003	-.015	.023	.00	26.40	.45	5.55	.00	.00	15.30	15.35	27.79
377	37803.	62.1	2400	-.003	.011	-.030	.00	24.72	.42	5.19	.00	.00	15.30	15.35	29.72
378	37804.	61.9	2820	-.009	-.002	.045	.00	28.44	.48	5.94	.00	.00	15.30	15.35	25.89
379	37805.	61.8	2980	-.002	-.001	.032	.00	32.03	.54	6.69	.00	.00	15.30	15.35	22.93
380	37806.	61.8	2540	-.005	-.006	.032	.00	28.08	.48	5.86	.00	.00	15.30	15.35	26.17
381	37807.	61.5	2740	-.004	.020	.052	.00	30.60	.35	6.43	.00	.00	15.29	15.34	23.76
382	37808.	61.6	2900	-.003	.004	.019	.00	35.03	.60	7.36	.00	.00	15.29	15.34	20.78

383	37809.	61.4	2500	.001	.011	.029	.00	30.10	.51	6.32	.00	.00	15.29	15.34	24.09
384	37810.	61.7	2740	.011	.010	.012	-.96	32.32	.55	6.79	.00	.00	15.29	15.34	22.54
385	37811.	61.8	2600	.012	-.035	.092	-1.16	30.31	.52	6.37	.00	.00	15.29	15.34	24.11
386	37812.	62.2	2900	.016	.000	.052	-1.95	32.72	.37	6.87	.00	.00	15.29	15.34	22.46
387	37813.	62.6	2740	.016	.013	.082	-1.89	31.26	.53	6.57	.00	.00	15.29	15.34	23.65
388	37814.	62.9	2960	.022	-.008	.001	-1.24	32.88	.56	6.91	.00	.00	15.29	15.34	22.60
389	37815.	63.5	2800	.015	.018	.014	-.76	30.74	.52	6.46	.00	.00	15.29	15.34	24.41
390	37816.	63.6	2820	.003	-.011	.010	.00	31.80	.54	6.64	.00	.00	15.30	15.35	23.77
391	37817.	63.7	3140	-.002	.004	.000	.00	34.68	.59	7.29	.00	.00	15.29	15.34	21.69
392	37818.	63.5	2780	.002	.011	.033	.00	32.31	.55	6.79	.00	.00	15.29	15.34	23.21
393	37819.	63.8	2540	.001	.020	-.003	.00	28.85	.33	6.06	.00	.00	15.29	15.34	26.12
394	37820.	63.5	3040	-.004	-.013	.010	.00	32.37	.55	6.80	.00	.00	15.29	15.34	23.19
395	37821.	63.6	2860	-.005	-.025	-.018	.00	30.21	.51	6.35	.00	.00	15.29	15.34	24.87
396	37822.	63.3	2800	-.005	.005	-.035	.00	28.35	.32	5.96	.00	.00	15.29	15.34	26.37
397	37823.	63.3	2820	-.002	-.022	-.017	.00	27.04	.31	5.68	.00	.00	15.29	15.34	27.68
398	37824.	63.2	2740	-.008	.000	-.013	.00	26.02	.29	5.43	.00	.00	15.30	15.35	28.89
399	37825.	63.0	2800	-.005	-.011	.019	.00	27.70	.31	5.78	.00	.00	15.30	15.35	27.04
400	37826.	62.9	2720	-.002	.011	-.029	.00	25.59	.44	5.34	.00	.00	15.30	15.35	29.26
401	37827.	62.9	2700	-.010	.006	-.049	.00	25.24	.57	5.27	.00	.00	15.30	15.35	29.64
402	37828.	62.5	2580	-.013	-.007	-.021	.00	24.77	.42	5.20	.00	.00	15.29	15.34	29.83
403	37829.	62.3	2980	-.005	-.009	-.027	.00	28.51	.65	5.99	.00	.00	15.29	15.34	25.83
404	37830.	62.3	2620	-.001	.001	-.002	.00	25.46	.43	5.35	.00	.00	15.29	15.34	28.90
405	37831.	62.3	2740	-.001	-.014	.013	.00	22.99	.39	4.83	.00	.00	15.29	15.34	32.01
406	37832.	62.2	2940	-.010	.003	.035	.00	25.48	.43	5.35	.00	.00	15.30	15.35	28.88
407	37833.	61.8	2960	-.009	-.023	.021	-.69	25.28	.43	5.31	.00	.00	15.30	15.35	28.93
408	37834.	61.8	2760	-.001	-.030	.012	-.76	24.79	.28	5.21	.00	.00	15.29	15.34	29.49
409	37835.	61.8	2700	-.001	.008	.010	-1.39	22.44	.25	4.71	.00	.00	15.29	15.34	32.55
410	37836.	61.8	2860	-.004	-.022	-.014	-1.10	24.19	.41	5.08	.00	.00	15.29	15.34	30.18
411	37837.	61.6	2560	.004	-.014	.005	-.99	21.61	.24	4.54	.00	.00	15.29	15.34	33.70
412	37838.	62.0	2860	.001	.002	-.026	-1.49	22.76	.26	4.78	.00	.00	15.29	15.34	32.19
413	37839.	61.7	2880	-.003	-.026	-.070	-.54	22.28	.25	4.68	.00	.00	15.29	15.34	32.70
414	37840.	61.8	2920	-.005	-.021	-.072	-.88	24.29	.28	5.10	.00	.00	15.29	15.34	30.09
415	37841.	61.4	2680	-.002	.028	-.064	.00	21.00	.24	4.38	.00	.00	15.30	15.35	34.79
416	37842.	61.8	2540	.002	-.033	-.003	.00	21.54	.24	4.53	.00	.00	15.29	15.34	33.88
417	37843.	61.5	2680	-.011	.005	-.055	.80	21.50	.37	4.52	.00	.00	15.29	15.34	33.81
418	37844.	61.3	2720	-.008	.003	-.074	.16	22.32	.38	4.69	.00	.00	15.29	15.34	32.44
419	37845.	61.2	2460	-.003	.016	-.052	1.43	20.78	.35	4.37	.00	.00	15.29	15.34	34.80
420	37846.	61.1	2620	-.002	-.004	-.033	1.05	20.63	.35	4.33	.00	.00	15.29	15.34	35.02
421	37847.	61.1	2500	-.016	.012	-.039	.95	20.29	.34	4.24	.00	.00	15.30	15.35	35.81
422	37848.	60.4	2680	-.014	-.017	-.097	.00	21.67	.37	4.52	.00	.00	15.30	15.35	33.15
423	37849.	60.5	2860	-.003	.003	-.096	.00	22.69	.39	4.74	.00	.00	15.30	15.35	31.69
424	37850.	60.3	2900	-.004	-.005	-.047	.00	23.93	.41	5.03	.00	.00	15.29	15.34	29.77
425	37851.	60.3	2940	-.011	.014	-.077	.00	25.17	.43	5.29	.00	.00	15.29	15.34	28.30
426	37852.	59.8	2780	-.015	-.017	-.036	.00	22.85	.52	4.77	.00	.00	15.30	15.35	31.12
427	37853.	59.6	2920	-.009	-.013	-.025	.00	23.96	.54	5.00	.00	.00	15.30	15.35	29.58
428	37854.	59.4	2560	-.006	-.019	-.085	.00	21.00	.48	4.38	.00	.00	15.30	15.35	33.64
429	37855.	59.3	2400	-.008	-.021	-.056	.00	20.41	.46	4.23	.00	.00	15.30	15.35	34.78
430	37856.	59.1	2560	.000	-.012	-.025	.00	28.78	.49	5.97	.00	.00	15.37	15.43	24.58
431	37857.	59.3	2600	.007	.007	-.034	.00	33.96	.58	7.04	.00	.00	15.37	15.43	20.91
432	37858.	59.4	2520	.012	-.002	-.031	.00	33.47	.57	6.99	.00	.00	15.37	15.41	21.10
433	37859.	59.8	2640	.009	.000	-.057	.00	34.21	.58	7.19	.00	.00	15.36	15.41	20.67
434	37860.	59.8	2480	.004	.027	-.033	.00	31.68	.54	6.65	.00	.00	15.36	15.41	22.29
435	37861.	60.0	2580	.009	.043	-.011	.00	32.52	.55	6.83	.00	.00	15.36	15.41	21.82
436	37862.	60.1	2820	.001	-.015	-.029	.00	33.91	.38	7.17	.00	.00	[illegible]	[illegible]	[illegible]

438	37864.	60.0	2660	.010	-.011	-.093	.00	30.06	.34	6.36	.00	.00	15.36	15.41	23.47
439	37865.	60.5	2940	.008	.000	-.043	.00	33.87	.38	7.12	.00	.00	15.37	15.41	21.13
440	37866.	60.4	2620	-.008	.005	-.050	.00	28.56	.32	6.00	.00	.00	15.30	15.35	25.00
441	37867.	60.2	2660	-.009	-.013	-.059	.44	30.77	.35	6.46	.00	.00	15.29	15.34	23.12
442	37868.	60.0	2340	-.015	.017	-.085	1.00	28.23	.32	5.93	.00	.00	15.29	15.34	25.12
443	37869.	59.5	2500	-.015	-.027	-.046	1.49	29.18	.50	6.09	.00	.00	15.30	15.35	24.25
444	37870.	59.3	2540	-.017	.003	-.054	2.07	30.10	.51	6.28	.00	.00	15.30	15.35	23.44
445	37871.	58.8	2660	-.017	.020	-.022	2.06	32.28	.55	6.74	.00	.00	15.30	15.35	21.65
446	37872.	58.6	2520	-.005	.019	-.013	2.64	30.67	.52	6.40	.00	.00	15.30	15.35	22.71
447	37873.	58.5	2300	-.002	.030	-.063	3.05	35.76	.61	7.47	.00	.00	15.30	15.35	19.46
448	37874.	58.5	2740	.007	.025	-.033	2.54	43.45	.49	9.13	.00	.00	15.29	15.34	15.90
449	37875.	58.8	2780	.007	.047	.038	1.95	43.74	.74	9.19	.00	.00	15.29	15.34	15.89
450	37876.	58.8	2400	.011	.023	.025	1.90	38.30	.65	8.05	.00	.00	15.36	15.41	18.13
451	37877.	59.3	2640	.012	.007	.020	1.85	38.19	.43	8.07	.00	.00	15.36	15.41	18.23
452	37878.	59.3	2940	.007	.036	.041	1.10	41.40	.70	8.70	.00	.00	15.29	15.34	16.92
453	37879.	59.6	2700	.001	.017	.007	1.12	32.88	.37	6.91	.00	.00	15.29	15.34	21.41
454	37880.	59.3	2780	.000	.003	.012	.00	32.21	.36	6.77	.00	.00	15.29	15.34	21.77
455	37881.	59.6	2560	.008	.021	-.002	.00	27.03	.46	5.68	.00	.00	15.30	15.35	26.06
456	37882.	59.7	3060	.000	-.011	.024	.00	31.08	.53	6.53	.00	.00	15.30	15.35	22.69
457	37883.	59.6	2820	-.002	-.005	.026	.00	29.23	.33	6.14	.00	.00	15.30	15.35	24.10
458	37884.	59.6	2820	-.001	.003	.021	.00	28.55	.32	5.96	.00	.00	15.30	15.35	24.83
459	37885.	59.5	2760	-.008	.002	.002	.00	28.06	.32	5.90	.00	.00	15.30	15.35	25.08
460	37886.	59.2	2400	-.008	-.008	.004	.00	25.22	.29	5.30	.00	.00	15.30	15.35	27.77
461	37887.	59.2	2620	-.010	-.017	.063	.00	25.83	.29	5.43	.00	.00	15.30	15.35	27.10
462	37888.	58.8	2640	-.013	.004	.048	.31	27.26	.31	5.73	.00	.00	15.30	15.35	25.51
463	37889.	58.6	2420	-.013	-.020	-.011	.47	26.08	.44	5.48	.00	.00	15.30	15.35	26.57
464	37890.	58.2	2480	-.022	-.008	.006	1.55	25.86	.44	5.40	.00	.00	15.30	15.35	26.77
465	37891.	57.7	2520	-.015	-.008	-.015	1.61	30.69	.52	6.41	.00	.00	15.30	15.35	22.34
466	37892.	57.6	2820	-.010	.037	.005	2.05	35.05	.60	7.32	.00	.00	15.30	15.35	19.53
467	37893.	57.2	2380	-.009	.011	.007	1.69	31.44	.53	6.61	.00	.00	15.29	15.34	21.51
468	37894.	57.2	2520	.000	.015	.043	1.92	33.28	.57	6.95	.00	.00	15.30	15.35	20.43
469	37895.	57.2	2240	.006	.002	.042	.72	28.79	.33	6.01	.00	.00	15.30	15.35	23.66
470	37896.	57.5	2580	.011	.029	.056	.71	34.19	.58	7.14	.00	.00	15.30	15.35	20.00
471	37897.	57.7	2520	.014	.001	.054	.00	39.92	.68	8.33	.00	.00	15.30	15.35	17.20
472	37898.	58.1	2600	.027	.047	.056	.00	41.68	.71	8.70	.00	.00	15.30	15.35	16.59
473	37899.	58.9	2580	.035	.033	.029	.00	41.34	.70	8.69	.00	.00	15.30	15.35	16.85
474	37900.	59.6	2580	.038	.021	.059	.00	40.33	.69	8.47	.00	.00	15.29	15.34	17.46
475	37901.	60.6	2460	.028	.030	.095	-1.01	36.77	.62	7.78	.00	.00	15.29	15.34	19.34
476	37902.	60.8	2540	.023	.012	.113	-1.15	34.68	.59	7.33	.00	.00	15.29	15.34	20.60
477	37903.	61.6	2640	.027	.004	.051	-1.46	33.77	.57	7.09	.00	.00	15.29	15.34	21.55
478	37904.	62.0	2720	.022	.013	.035	-2.42	32.46	.55	6.82	.00	.00	15.29	15.34	22.59
479	37905.	62.5	2660	.033	.001	.076	-2.40	29.05	.33	6.10	.00	.00	15.29	15.34	25.44
480	37906.	63.5	2780	.036	-.010	.075	-2.36	26.87	.46	5.65	.00	.00	15.29	15.34	27.91
481	37907.	64.1	2820	.026	.016	.017	-2.97	26.55	.30	5.54	.00	.00	15.30	15.35	28.71
482	37908.	64.6	2980	.018	-.003	.038	-3.32	27.25	.46	5.69	.00	.00	15.30	15.35	28.20
483	37909.	64.9	2540	.010	-.029	.015	-2.72	21.59	.37	4.51	.00	.00	15.30	15.35	35.75
484	37910.	65.0	3160	.010	-.040	.000	-2.59	26.99	.46	5.67	.00	.00	15.29	15.34	28.47
485	37911.	65.3	2880	.007	-.010	.042	-1.94	26.37	.30	5.54	.00	.00	15.29	15.34	29.27
486	37912.	65.3	2920	-.001	-.004	-.015	-1.39	24.72	.28	5.19	.00	.00	15.29	15.34	31.23
487	37913.	65.3	3140	.003	.014	.032	-.50	25.90	.29	5.44	.00	.00	15.29	15.34	29.78
488	37914.	65.5	2840	.002	-.009	-.022	-.10	24.94	.28	5.24	.00	.00	15.29	15.34	31.02
489	37915.	65.4	2480	-.004	-.010	-.036	.00	20.36	.23	4.28	.00	.00	15.29	15.34	37.94
490	37916.	65.3	3080	-.017	-.014	-.083	.00	26.12	.30	5.49	.00	.00	15.29	15.34	29.53
491	37917.	64.6	3060	-.017	-.007	-.144	.00	23.51	.27	4.94	.00	.00	15.29	15.34	32.47
492	37918.	64.5	2960	-.008	-.008	-.092	.00	24.73	.28	5.20	.00	.00	15.29	15.34	30.83

493	37919.	64.3	2900	-.014	-.022	-.140	.00	23.80	.27	5.00	.00	.00	15.29	15.34	31.92
494	37920.	63.9	2940	-.012	-.028	-.137	.00	24.16	.41	5.08	.00	.00	15.29	15.34	31.25
495	37921.	63.8	2840	-.009	-.011	-.056	.00	23.32	.26	4.93	.01	.00	15.27	15.33	32.04
496	37922.	63.5	2940	-.020	-.005	-.097	.00	18.48	.31	3.93	.02	.01	15.23	15.30	39.84
497	37923.	62.9	2780	-.030	-.035	-.099	.00	14.35	.24	3.03	.02	.01	15.22	15.28	51.02
498	37924.	62.2	2920	-.028	-.027	-.078	.83	15.00	.25	3.17	.02	.01	15.22	15.28	48.22
499	37925.	61.7	2600	-.034	-.018	-.052	.83	18.43	.21	3.87	.01	.00	15.26	15.33	39.38
500	37926.	60.7	2520	-.025	-.011	-.031	2.06	19.44	.33	4.08	.01	.00	15.28	15.34	36.86
501	37927.	60.6	2720	-.013	.002	.010	3.12	27.76	.47	5.83	.01	.00	15.28	15.34	25.75
502	37928.	60.1	2760	-.031	.026	.009	3.17	32.77	.56	6.89	.01	.00	15.28	15.34	21.65
503	37929.	59.2	2520	-.031	.022	-.021	3.47	30.09	.34	6.28	.01	.00	15.28	15.34	23.36
504	37930.	58.8	2740	-.030	-.012	-.036	3.66	23.73	.40	4.89	.01	.00	15.29	15.35	29.76
505	37931.	57.9	2620	-.027	.002	.022	2.44	29.07	.49	5.95	.01	.00	15.30	15.35	24.12
506	37932.	57.6	2580	.003	.028	.054	2.55	47.60	1.08	9.75	.01	.00	15.31	15.35	14.65
507	37933.	58.0	2560	.022	.017	.140	2.41	47.92	.82	9.94	.00	.00	15.37	15.43	14.50
508	37934.	58.5	2560	.016	.076	.149	2.30	48.46	.82	10.12	.00	.00	15.37	15.41	14.36
509	37935.	58.8	2660	.014	.026	.050	2.22	49.72	.84	10.45	.00	.00	15.36	15.41	13.97
510	37936.	59.1	2600	.021	.044	-.009	2.89	47.52	.81	9.98	.00	.00	15.36	15.41	14.71
511	37937.	59.7	2880	.009	.029	.020	2.31	49.94	.85	10.49	.00	.00	15.36	15.41	14.12
512	37938.	59.5	2480	.004	.033	.035	2.62	39.66	.45	8.33	.00	.00	15.36	15.41	17.74
513	37939.	59.8	2440	.017	.048	.023	2.52	38.68	.66	8.13	.00	.00	15.36	15.41	18.29
514	37940.	60.3	2800	.013	.040	.086	1.72	44.00	.75	9.24	.02	.00	15.28	15.34	16.16
515	37941.	60.4	2760	.000	.019	.059	1.27	41.49	.47	8.72	.02	.00	15.27	15.33	17.16
516	37942.	60.3	2660	.005	-.014	.047	.63	32.40	.55	6.76	.01	.00	15.28	15.34	22.06
517	37943.	60.7	2420	.010	.017	.052	.00	30.08	.51	6.28	.01	.00	15.28	15.34	23.92
518	37944.	60.7	2480	.004	.003	.016	.00	30.83	.52	6.44	.01	.00	15.29	15.34	23.40
519	37945.	60.8	2660	.013	.019	.007	.00	34.68	.59	7.24	.00	.00	15.30	15.35	20.86
520	37946.	61.3	2460	.025	.004	.014	.00	30.69	.52	6.45	.00	.00	15.29	15.34	23.59
521	37947.	61.9	2720	.016	.006	.036	.00	27.90	.32	5.86	.00	.00	15.29	15.34	26.24
522	37948.	62.0	3080	.001	.059	.016	.00	31.65	.36	6.65	.00	.00	15.29	15.34	23.14
523	37949.	62.0	2700	.012	.004	.065	.16	27.23	.31	5.72	.00	.00	15.29	15.34	26.90
524	37950.	62.5	2740	.014	-.008	.035	-.21	28.54	.32	5.96	.00	.00	15.30	15.35	26.05
525	37951.	62.6	2660	.004	-.005	.042	-1.53	26.87	.30	5.61	.00	.00	15.30	15.35	27.71
526	37952.	62.7	2580	.012	-.016	-.048	-2.15	27.32	.31	5.70	.00	.00	15.30	15.35	27.30
527	37953.	63.1	2780	.004	-.004	-.057	-2.17	24.64	.28	5.18	.00	.00	15.29	15.34	30.28
528	37954.	62.9	3040	.005	-.034	.025	-1.92	22.49	.38	4.72	.00	.00	15.29	15.34	33.03
529	37955.	63.4	2800	.007	-.017	.061	-1.49	19.03	.22	4.00	.01	.01	15.26	15.31	39.16
530	37956.	63.2	2820	-.009	-.005	-.018	-1.65	15.23	.26	3.20	.01	.01	15.25	15.31	48.73
531	37957.	63.0	2820	-.002	-.010	.026	-1.36	15.05	.26	3.14	.02	.01	15.25	15.31	49.44
532	37958.	63.1	2720	-.004	-.020	.029	-1.04	13.32	.15	2.76	.01	.00	15.27	15.33	56.46
533	37959.	62.8	2840	-.011	-.036	.024	-1.45	13.09	.15	2.72	.00	.00	15.29	15.35	57.35
534	37960.	62.6	2640	-.023	-.030	.020	-1.57	12.44	.14	2.58	.00	.00	15.30	15.35	60.20
535	37961.	61.8	2640	-.024	-.041	.047	-1.77	11.98	.20	2.50	.00	.00	15.30	15.35	61.37
536	37962.	61.6	2980	-.017	-.031	.015	-.81	12.75	.14	2.68	.00	.00	15.29	15.34	57.05
537	37963.	61.0	2580	-.029	-.055	-.021	-.49	11.03	.12	2.33	.00	.00	15.35	15.40	64.80
538	37964.	60.3	2580	-.037	-.014	-.036	.00	11.74	.13	2.48	.00	.00	15.35	15.40	60.22
539	37965.	59.4	2460	-.043	-.035	-.068	.00	10.76	.12	2.26	.00	.00	15.35	15.40	65.13
540	37966.	58.4	2620	-.081	-.086	-.025	.00	12.90	.15	2.71	.01	.00	15.34	15.40	53.36
541	37967.	55.8	2400	-.114	-.107	-.023	.00	11.35	.13	2.37	.01	.00	15.35	15.40	58.34
542	37968.	53.4	2220	-.096	-.117	-.027	.00	12.10	.14	2.53	.01	.00	15.42	15.47	52.31
543	37969.	51.7	2300	-.063	-.094	-.054	.00	12.47	.14	2.60	.00	.00	15.35	15.41	49.19
544	37970.	50.6	2220	-.068	-.060	-.046	.00	12.46	.14	2.58	.00	.00	15.36	15.41	48.55
545	37971.	48.7	2120	-.094	-.093	.028	.00	12.27	.14	2.56	.00	.00	15.36	15.41	47.14
546	37972.	46.5	2100	-.105	-.141	.077	-.56	12.67	.14	2.63	.00	.00	[illegible]	[illegible]	[illegible]

548	37974.	41.3	1740	-.128	-.128	.064	-2.53	11.44	.13	2.37	.00	.00	15.37	15.43	43.22
549	37975.	38.4	1660	-.150	-.198	.017	-2.73	11.12	.13	2.32	.00	.00	15.37	15.41	41.10
550	37976.	34.7	1680	-.175	-.216	.036	-3.73	11.03	.06	2.32	.00	.00	15.36	15.41	37.18
551	37977.	30.8	1620	-.188	-.234	.032	-4.78	10.74	.00	2.26	.00	.00	15.37	15.41	33.84
552	37978.	26.5	1680	-.200	-.251	.040	-4.63	12.18	.00	2.54	.00	.00	15.37	15.43	25.87
553	37979.	22.0	1460	-.185	-.237	.018	-4.45	11.56	.07	2.37	.00	.00	15.39	15.44	23.08
554	37980.	18.4	1260	-.175	-.215	-.052	-4.00	10.82	.12	2.17	.00	.00	15.41	15.46	21.04
555	37981.	14.3	1400	-.206	-.239	-.126	-4.45	10.57	.12	2.13	.00	.00	15.40	15.46	16.67
556	37982.	9.3	1340	-.206	-.230	-.052	.00	12.67	.14	2.59	.01	.00	15.36	15.41	8.90
557	37983.	5.3	1040	-.081	-.155	-.002	.00	8.95	.20	1.84	.01	.01	15.32	15.38	7.05
558	37984.	5.8	1560	.065	.045	-.009	.00	22.43	.51	4.68	.03	.01	15.37	15.44	3.03
559	37985.	8.1	2260	.120	.155	-.049	.00	30.50	.87	6.28	.03	.01	15.39	15.46	3.19
560	37986.	11.0	2920	.137	.140	-.094	.00	40.43	.92	8.38	.01	.00	15.43	15.49	3.26
561	37987.	14.1	3060	.142	.162	-.110	.00	44.88	.76	9.37	.00	.00	15.44	15.49	3.75
562	37988.	17.2	3460	.136	.159	-.031	.00	51.03	.87	10.72	.00	.00	15.43	15.49	3.99
563	37989.	20.1	3080	.125	.145	.014	.00	51.29	.87	10.77	.00	.00	15.43	15.49	4.63
564	37990.	22.7	3200	.126	.147	.020	.00	54.91	.93	11.54	.01	.00	15.42	15.49	4.89
565	37991.	25.6	3060	.114	.140	.032	.00	51.03	.87	10.72	.01	.00	15.35	15.41	5.92
566	37992.	27.7	3420	.089	.113	.051	.00	56.44	.64	11.86	.02	.00	15.35	15.40	5.79
567	37993.	29.5	3100	.083	.085	.102	.00	49.35	.84	10.37	.02	.00	15.35	15.40	7.06
568	37994.	31.3	2920	.075	.094	.111	.00	47.43	.81	9.97	.01	.00	15.28	15.34	7.80
569	37995.	32.8	2760	.064	.078	.105	.00	43.29	.74	9.10	.01	.00	15.28	15.34	8.94
570	37996.	34.1	2860	.054	.074	.062	.00	44.47	.76	9.34	.02	.00	15.28	15.34	9.05
571	37997.	35.2	2980	.050	.071	.090	.00	45.47	.77	9.55	.02	.00	15.28	15.34	9.12
572	37998.	36.3	2840	.039	.053	.117	.00	37.93	.64	7.97	.02	.00	15.26	15.33	11.27
573	37999.	36.9	2720	.025	.038	.047	.00	34.67	.59	7.29	.02	.00	15.26	15.33	12.52
574	38000.	37.4	2600	.013	.029	.035	.00	27.93	.47	5.87	.02	.00	15.26	15.33	15.77
575	38001.	37.5	2500	.004	.032	.018	.00	26.07	.44	5.44	.01	.00	15.28	15.34	17.06
576	38002.	37.6	2780	.012	.018	.044	.00	29.62	.50	6.18	.01	.00	15.29	15.34	15.08
577	38003.	38.0	2900	.016	.031	.014	.00	29.40	.33	6.14	.01	.00	15.29	15.34	15.36
578	38004.	38.3	2600	.011	.005	.019	.00	27.31	.46	5.67	.00	.00	15.30	15.35	16.79
579	38005.	38.5	2720	.015	.033	.025	.00	32.24	.55	6.73	.00	.00	15.30	15.35	14.19
580	38006.	39.0	2240	.018	.028	.051	.00	29.08	.49	6.07	.00	.00	15.30	15.35	15.94
581	38007.	39.3	2360	.022	.044	.043	.00	29.32	.33	6.12	.00	.00	15.30	15.35	15.94
582	38008.	39.9	2420	.017	.031	.026	.00	29.62	.50	6.22	.00	.00	15.30	15.35	15.95
583	38009.	40.0	2440	.010	.033	.048	.00	29.72	.34	6.24	.00	.00	15.30	15.35	15.94
584	38010.	40.4	2440	.005	-.007	-.030	.00	20.58	.23	4.33	.00	.00	15.30	15.35	23.19
585	38011.	40.3	2440	-.003	-.001	.049	.00	20.24	.34	4.25	.00	.00	15.30	15.35	23.53
586	38012.	40.2	2580	-.003	-.007	.044	.00	21.46	.36	4.51	.00	.00	15.30	15.35	22.17
587	38013.	40.1	2620	.001	.003	.060	.00	21.66	.25	4.55	.00	.00	15.30	15.35	21.91
588	38014.	40.3	2400	.002	.020	.026	.00	19.96	.34	4.19	.00	.00	15.30	15.35	23.87
589	38015.	40.2	2360	.009	.011	.044	.00	19.31	.22	4.06	.00	.00	15.30	15.35	24.64
590	38016.	40.7	2440	.011	-.004	.024	.00	21.05	.24	4.42	.00	.00	15.30	15.35	22.84
591	38017.	40.7	2400	.010	-.015	.032	.00	19.68	.22	4.13	.00	.00	15.30	15.35	24.47
592	38018.	41.1	2680	.013	.009	.004	.00	21.87	.25	4.60	.00	.00	15.30	15.35	22.22
593	38019.	41.3	2480	.004	.007	.022	.00	20.34	.12	4.27	.00	.00	15.30	15.35	24.01
594	38020.	41.3	2520	.002	-.005	.018	.00	19.62	.22	4.12	.00	.00	15.30	15.35	24.89
595	38021.	41.4	2220	.005	-.007	-.037	.00	17.63	.20	3.70	.00	.00	15.29	15.34	27.74
596	38022.	41.5	2120	.000	.000	-.100	.00	.00	.00	.00	.00	.00	.00	.00	.00
597	38023.	41.4	2340	.003	.001	-.104	.00	.00	.00	.00	.00	.00	.00	.00	.00
598	38024.	41.7	2280	.005	.001	-.071	.00	.00	.00	.00	.00	.00	.00	.00	.00
599	38025.	41.6	2780	-.009	.011	-.024	.00	.00	.00	.00	.00	.00	.00	.00	.00
600	38026.	41.3	2540	-.013	-.008	.003	.00	.00	.00	.00	.00	.00	.00	.00	.00
601	38027.	41.0	2300	-.011	-.013	.027	.00	.00	.00	.00	.00	.00	.00	.00	.00
602	38028.	40.8	2420	-.008	-.012	.054	.00	.00	.00	.00	.00	.00	.00	.00	.00

603	38029.	40.7	2380	-.012	-.017	.038	.00	.00	.00	.00	.00	.00	.00	.00	.00	.00	.00
604	38030.	40.3	2380	-.017	-.002	.026	.00	.00	.00	.00	.00	.00	.00	.00	.00	.00	.00
605	38031.	39.9	2400	-.008	-.003	.027	.00	15.61	.18	3.28	.00	.00	15.30	15.35	30.26		
606	38032.	39.9	2540	-.011	-.016	.015	.00	15.82	.18	3.32	.00	.00	15.30	15.35	29.86		
607	38033.	39.5	2620	-.022	-.016	.002	.00	13.65	.15	2.87	.00	.00	15.30	15.35	34.21		
608	38034.	39.0	1980	-.011	-.019	-.017	.00	13.09	.22	2.73	.00	.00	15.30	15.35	35.43		
609	38035.	39.0	1800	-.005	-.006	.013	.00	11.44	.19	2.36	.00	.00	15.31	15.35	41.08		
610	38036.	38.8	2540	-.013	-.013	.021	.00	14.49	.25	2.97	.00	.00	15.39	15.44	32.45		
611	38037.	38.4	2460	-.004	-.003	.034	.00	15.71	.27	3.26	.00	.00	15.38	15.43	29.30		
612	38038.	38.6	2360	.003	-.012	.016	.00	14.87	.25	3.08	.00	.00	15.38	15.43	31.07		
613	38039.	38.6	2520	-.003	-.015	.049	.00	15.86	.36	3.31	.00	.00	15.37	15.43	28.94		
614	38040.	38.4	2180	.000	-.004	.002	.00	13.90	.24	2.90	.00	.00	15.37	15.43	32.91		
615	38041.	38.6	2380	-.002	-.013	.022	.00	15.22	.26	3.18	.00	.00	15.37	15.43	30.17		
616	38042.	38.3	2540	-.004	.005	.049	.00	18.67	.32	3.90	.00	.00	15.37	15.43	24.43		
617	38043.	38.4	2360	.011	.014	.031	.00	19.26	.33	4.05	.00	.00	15.37	15.41	23.56		
618	38044.	38.8	2340	.012	-.003	.055	.00	19.89	.23	4.21	.00	.00	15.36	15.41	22.93		
619	38045.	38.9	2380	.011	.006	.052	.00	19.98	.23	4.22	.00	.00	15.36	15.41	22.89		
620	38046.	39.3	2000	.009	.006	.030	.00	16.07	.18	3.38	.00	.00	15.36	15.41	28.89		
621	38047.	39.3	2460	.002	-.004	.022	.00	21.26	.24	4.47	.00	.00	15.36	15.41	21.84		
622	38048.	39.4	2440	.005	.006	.032	.00	23.71	.27	4.98	.00	.00	15.36	15.41	19.62		
623	38049.	39.5	2540	.010	.031	.038	.00	25.26	.29	5.31	.00	.00	15.36	15.41	18.49		
624	38050.	39.8	2540	.018	.014	-.001	.00	24.04	.27	5.02	.00	.00	15.37	15.41	19.69		
625	38051.	40.3	2200	.010	.027	.048	.00	20.64	.23	4.31	.00	.00	15.30	15.35	23.23		
626	38052.	40.2	2540	.008	.026	.052	.00	23.88	.27	4.99	.00	.00	15.30	15.35	20.05		
627	38053.	40.6	2600	.008	.012	.026	.00	22.96	.26	4.79	.00	.00	15.30	15.35	21.06		
628	38054.	40.6	2340	.004	.023	.026	.00	21.09	.24	4.40	.00	.00	15.30	15.35	22.89		
629	38055.	40.8	2720	.010	.018	.074	.00	23.41	.27	4.89	.00	.00	15.30	15.35	20.74		
630	38056.	41.0	2480	.007	-.008	.051	.00	21.48	.36	4.51	.00	.00	15.30	15.35	22.57		
631	38057.	41.1	2640	.004	.016	.049	.00	24.03	.41	5.05	.00	.00	15.30	15.35	20.22		
632	38058.	41.2	2520	-.001	.013	.033	.00	19.92	.34	4.21	.00	.00	15.29	15.34	24.27		
633	38059.	41.0	2340	-.011	-.001	.017	.00	13.67	.15	2.89	.00	.00	15.29	15.34	35.26		
634	38060.	40.7	2540	-.017	-.018	.045	.00	14.76	.17	3.08	.00	.00	15.29	15.34	32.77		
635	38061.	40.3	2360	-.009	-.033	.058	.00	16.97	.29	3.52	.00	.00	15.30	15.35	28.39		
636	38062.	40.3	2400	.005	.012	.032	.00	18.48	.31	3.81	.00	.00	15.31	15.35	26.29		
637	38063.	40.5	2560	.008	.000	.060	.00	19.53	.33	4.02	.00	.00	15.31	15.35	24.99		
638	38064.	40.7	2540	.004	-.010	.052	.00	19.01	.43	3.94	.00	.00	15.30	15.35	25.61		
639	38065.	40.7	2460	-.004	.001	.026	.00	18.65	.42	3.89	.00	.00	15.37	15.43	25.98		
640	38066.	40.5	2560	-.009	-.005	.044	.00	19.14	.33	3.99	.00	.00	15.37	15.43	25.17		
641	38067.	40.3	2380	-.001	-.002	.047	.00	16.46	.28	3.44	.00	.00	15.37	15.43	29.15		
642	38068.	40.4	2280	-.004	-.001	.047	.00	15.86	.27	3.31	.00	.00	15.37	15.43	30.34		
643	38069.	40.1	2540	-.007	.013	.014	.00	17.17	.29	3.58	.00	.00	15.37	15.43	27.83		
644	38070.	40.1	2500	-.004	.006	.029	.00	17.52	.40	3.66	.00	.00	15.37	15.43	27.26		
645	38071.	39.9	2480	-.008	-.006	-.005	.00	15.78	.36	3.29	.00	.00	15.37	15.43	30.12		
646	38072.	39.8	2260	-.002	-.012	.029	.00	15.06	.34	3.12	.00	.00	15.38	15.43	31.67		
647	38073.	39.8	2440	-.005	-.010	.077	.00	16.45	.37	3.41	.00	.00	15.38	15.43	29.02		
648	38074.	39.6	2520	-.008	-.014	.108	.00	17.09	.39	3.54	.00	.00	15.38	15.43	27.74		
649	38075.	39.5	2180	-.004	-.005	.177	.00	14.64	.33	3.04	.00	.00	15.38	15.43	32.32		
650	38076.	39.4	2660	-.005	.001	.209	.00	18.71	.42	3.88	.00	.00	15.38	15.43	25.21		
651	38077.	39.3	2280	-.009	.000	.206	.00	15.57	.35	3.25	.00	.00	15.37	15.43	30.03		
652	38078.	39.0	2320	-.011	-.007	.182	.00	16.11	.37	3.36	.00	.00	15.37	15.43	28.80		
653	38079.	38.8	2280	-.001	-.006	.176	.00	16.06	.36	3.35	.00	.00	15.37	15.43	28.77		
654	38080.	38.9	2320	.001	.004	.116	.00	17.50	.40	3.68	.00	.00	15.36	15.41	26.29		
655	38081.	38.8	2380	.005	-.007	.021	.00	18.81	.32	3.95	.00	.00	15.36	15.41	[illegible]		
656	38082.	39.2	2180	.008	-.010	.006	.00	[illegible]	[illegible]								

658	38084.	39.1	2300	-.009	-.017	.019	.00	16.18	.18	3.42	.00	.00	15.36	15.41	28.38
659	38085.	38.8	2380	-.009	.002	-.004	.00	15.85	.18	3.35	.00	.00	15.36	15.41	28.76
660	38086.	38.7	2280	-.011	-.022	-.050	.00	13.83	.16	2.90	.00	.00	15.36	15.41	33.08
661	38087.	38.3	2480	-.021	-.008	-.090	.00	15.24	.26	3.18	.00	.00	15.37	15.41	29.92
662	38088.	37.8	2420	-.008	-.006	-.084	.00	18.52	.31	3.87	.00	.00	15.37	15.41	24.28
663	38089.	38.0	2420	.005	.004	-.021	.00	22.02	.25	4.60	.00	.00	15.37	15.41	20.53
664	38090.	38.0	2120	.005	.017	.014	.00	20.78	.24	4.36	.00	.00	15.36	15.41	21.64
665	38091.	38.2	2320	.024	.019	.023	.00	25.14	.28	5.28	.00	.00	15.36	15.41	17.98
666	38092.	39.1	2300	.026	.014	-.002	.00	23.80	.27	5.00	.00	.00	15.30	15.35	19.43
667	38093.	39.4	2380	.013	.001	.018	.00	23.01	.26	4.84	.00	.00	15.30	15.35	20.23
668	38094.	39.7	2520	.009	.005	.030	.00	22.79	.26	4.79	.00	.00	15.30	15.35	20.58
669	38095.	39.8	2420	.003	.005	.019	.00	21.26	.24	4.47	.00	.00	15.30	15.35	22.11
670	38096.	39.8	2300	.002	.003	.009	.00	20.42	.23	4.29	.00	.00	15.30	15.35	23.06
671	38097.	39.8	2300	.000	.025	-.019	.00	18.79	.21	3.95	.00	.00	15.30	15.35	25.08
672	38098.	39.8	2340	-.007	-.009	-.009	.00	18.44	.21	3.85	.00	.00	15.30	15.35	25.69
673	38099.	39.6	2180	-.010	-.001	.032	.00	16.79	.29	3.51	.00	.00	15.30	15.35	28.04
674	38100.	39.4	2400	-.004	-.009	.044	.00	17.63	.30	3.68	.00	.00	15.30	15.35	26.58
675	38101.	39.4	2660	-.002	-.002	.029	.00	19.97	.34	4.17	.00	.00	15.30	15.35	23.47
676	38102.	39.3	2240	-.006	.004	.024	.00	16.52	.37	3.43	.00	.00	15.31	15.35	28.48
677	38103.	39.1	2280	-.013	.002	.101	.00	16.79	.38	3.48	.00	.00	15.31	15.35	27.88
678	38104.	38.7	2320	-.007	.003	.139	.00	17.36	.30	3.62	.00	.00	15.30	15.35	26.53
679	38105.	38.8	2540	-.006	-.005	.177	.00	19.36	.33	4.04	.00	.00	15.30	15.35	23.85
680	38106.	38.4	2240	-.002	-.015	.167	.00	17.03	.29	3.58	.00	.00	15.30	15.35	26.69
681	38107.	38.7	2200	-.002	-.001	.139	.00	17.66	.30	3.71	.00	.00	15.37	15.41	25.91
682	38108.	38.3	2440	-.009	-.014	.131	.00	19.60	.33	4.09	.00	.00	15.37	15.43	23.27
683	38109.	38.3	2080	-.001	.009	.136	.00	16.32	.37	3.41	.00	.00	15.37	15.43	27.96
684	38110.	38.3	2320	.000	.002	.166	.00	17.81	.40	3.72	.00	.00	15.37	15.43	25.59
685	38111.	38.3	2760	-.001	-.004	.170	.00	21.89	.50	4.57	.00	.00	15.37	15.43	20.84
686	38112.	38.2	2420	.001	.006	.166	.00	18.43	.42	3.85	.00	.00	15.37	15.43	24.69
687	38113.	38.4	2300	.000	-.001	.159	.00	18.04	.41	3.77	.00	.00	15.37	15.43	25.31
688	38114.	38.2	2420	.004	-.013	.166	.00	18.59	.42	3.88	.00	.00	15.37	15.43	24.47
689	38115.	38.6	2080	.008	-.001	.166	.00	15.99	.36	3.34	.00	.00	15.37	15.43	28.71
690	38116.	38.6	2300	.001	-.002	.179	.00	17.75	.40	3.70	.00	.00	15.37	15.43	25.86
691	38117.	38.6	2320	-.003	-.006	.164	.00	18.49	.42	3.86	.00	.00	15.37	15.43	24.85
692	38118.	38.4	2420	.003	.007	.147	.00	18.55	.53	3.87	.00	.00	15.37	15.43	24.65
693	38119.	38.8	2180	.011	-.017	.089	.00	16.26	.46	3.40	.00	.00	15.37	15.43	28.36
694	38120.	38.9	2200	.008	-.001	.007	.00	16.75	.38	3.52	.00	.00	15.36	15.41	27.46
695	38121.	39.1	2560	.003	-.002	-.012	.00	19.94	.45	4.19	.00	.00	15.36	15.41	23.16
696	38122.	39.0	2620	.004	.012	-.002	.00	19.38	.33	4.07	.00	.00	15.36	15.41	23.81
697	38123.	39.3	2300	.004	.007	-.071	.00	18.20	.31	3.82	.00	.00	15.37	15.41	25.53
698	38124.	39.2	2320	-.011	-.015	-.115	.00	17.28	.29	3.63	.00	.00	15.37	15.41	26.85
699	38125.	38.8	2600	-.010	-.006	-.116	.00	20.00	.34	4.20	.00	.00	15.37	15.41	22.94
700	38126.	38.8	2380	-.004	.003	-.121	.00	18.38	.31	3.86	.00	.00	15.37	15.41	24.97
701	38127.	38.6	2500	-.012	-.011	-.131	.00	19.08	.32	4.01	.00	.00	15.37	15.41	23.94
702	38128.	38.3	2400	-.011	-.009	-.140	.00	19.85	.34	4.14	.00	.00	15.37	15.43	22.96
703	38129.	38.1	2520	-.005	-.011	-.131	.00	18.13	.31	3.76	.00	.00	15.38	15.43	25.20
704	38130.	38.0	2300	-.010	-.029	-.103	.00	16.97	.29	3.52	.00	.00	15.38	15.43	26.86
705	38131.	37.7	2440	-.014	-.009	-.112	.00	17.75	.30	3.68	.00	.00	15.38	15.43	25.46
706	38132.	37.4	2040	-.010	.007	-.101	.00	15.88	.27	3.31	.00	.00	15.37	15.43	28.06
707	38133.	37.3	2200	.004	.009	-.008	.00	17.72	.20	3.72	.00	.00	15.44	15.49	24.89
708	38134.	37.6	2240	.003	.007	.022	.00	19.17	.22	4.03	.00	.00	15.44	15.49	23.21
709	38135.	37.4	2260	-.004	-.004	.001	.00	20.61	.23	4.33	.00	.00	15.44	15.49	21.47
710	38136.	37.4	2240	.005	.012	.004	.00	19.48	.22	4.09	.00	.00	15.36	15.41	22.70
711	38137.	37.7	2160	.005	.008	.031	.00	18.88	.21	3.97	.00	.00	15.36	15.41	23.58
712	38138.	37.7	2180	-.002	-.009	.047	.00	18.91	.32	3.97	.00	.00	15.36	15.41	23.54

713	38139.	37.6	2220	-.005	.016	.027	.00	18.87	.32	3.97	.00	.00	15.36	15.41	23.52
714	38140.	37.4	2120	-.004	.011	.012	.00	18.04	.31	3.79	.00	.00	15.36	15.41	24.52
715	38141.	37.4	2260	.009	-.004	.014	.00	19.02	.32	4.00	.00	.00	15.36	15.41	23.22
716	38142.	37.8	2300	.013	.015	.014	.00	19.47	.33	4.09	.00	.00	15.36	15.41	22.94
717	38143.	37.9	2300	.000	-.002	.028	.00	19.48	.22	4.12	.00	.00	15.29	15.34	22.88
718	38144.	37.8	2160	-.024	-.007	.032	.00	11.33	.13	2.41	.00	.00	15.28	15.34	38.92
719	38145.	36.9	2020	-.051	-.036	.018	.00	13.69	.23	2.86	.00	.00	15.30	15.35	32.07
720	38146.	35.6	1540	-.076	-.078	.028	.00	12.06	.21	2.47	.00	.00	15.38	15.44	35.77
721	38147.	33.6	1320	-.096	-.113	.014	.00	9.36	.16	1.88	.00	.00	15.41	15.46	44.41
722	38148.	31.4	1560	-.128	-.133	.032	.00	10.81	.18	2.14	.00	.00	15.42	15.47	36.43
723	38149.	28.0	1560	-.166	-.160	.034	.00	12.34	.14	2.44	.00	.00	15.49	15.54	28.44
724	38150.	24.1	1360	-.165	-.179	.033	.00	10.10	.11	2.01	.00	.00	15.56	15.62	29.75
725	38151.	20.7	1460	-.161	-.180	.024	.00	11.24	.19	2.24	.00	.00	15.63	15.69	22.98
726	38152.	17.0	1200	-.174	-.183	.010	.00	9.78	.17	1.98	.00	.00	15.69	15.75	21.44
727	38153.	13.1	1500	-.191	-.193	.027	.00	11.59	.20	2.40	.00	.00	15.72	15.78	13.54
728	38154.	8.7	1360	-.200	-.216	.026	.00	12.44	.35	2.60	.01	.01	15.67	15.73	8.24
729	38155.	4.3	1240	-.085	-.206	.035	.00	10.92	.37	2.28	.01	.01	15.66	15.72	4.68
730	38156.	4.9	1340	.128	.066	.033	.00	22.56	.77	4.71	.02	.01	15.66	15.72	2.59
731	38157.	9.9	2760	.225	.248	.026	.00	45.87	1.82	9.57	.05	.01	15.58	15.65	2.56
732	38158.	14.8	4720	.205	.250	.026	.00	74.53	1.69	15.65	.03	.00	15.54	15.60	2.34
733	38159.	19.0	3720	.164	.209	.027	.00	59.19	1.34	12.51	.02	.00	15.54	15.60	3.75
734	38160.	22.0	3420	.148	.176	.051	.00	58.96	1.00	12.38	.03	.00	15.48	15.53	4.40
735	38161.	25.4	3260	.134	.148	.038	.00	55.19	.94	11.59	.03	.00	15.41	15.47	5.43
736	38162.	27.9	3500	.105	.129	.035	.00	60.59	1.03	12.73	.03	.00	15.41	15.47	5.42
737	38163.	30.0	3400	.098	.095	.040	.00	55.02	.93	11.56	.03	.00	15.41	15.47	6.44
738	38164.	32.1	3000	.083	.094	.028	.00	50.65	.86	10.57	.02	.00	15.35	15.41	7.53
739	38165.	33.7	2920	.052	.073	.018	.00	40.92	.70	8.60	.01	.00	15.35	15.41	9.71
740	38166.	34.4	2680	.034	.032	.041	.00	32.08	.55	6.74	.01	.00	15.36	15.41	12.67
741	38167.	35.1	2520	.020	.019	.029	.00	26.84	.46	5.64	.00	.00	15.29	15.34	15.47
742	38168.	35.3	2420	.011	.011	.015	.00	22.88	.39	4.84	.00	.00	15.29	15.34	18.11
743	38169.	35.6	2540	.006	.002	.022	.00	22.94	.26	4.82	.00	.00	15.30	15.35	18.36
744	38170.	35.6	2580	.002	.016	.023	.00	22.56	.26	4.71	.00	.00	15.30	15.35	18.76
745	38171.	35.7	2360	.007	.015	.016	.00	21.37	.24	4.46	.00	.00	15.30	15.35	19.89
746	38172.	35.8	2480	.010	.002	.016	.00	22.20	.25	4.63	.00	.00	15.30	15.35	19.23
747	38173.	36.1	2220	.015	.015	.022	.00	19.62	.22	4.07	.00	.00	15.31	15.35	22.06
748	38174.	36.5	2620	.004	-.006	.035	.00	22.71	.39	4.74	.00	.00	15.30	15.35	19.13
749	38175.	36.3	2500	-.003	.014	.017	.00	20.86	.24	4.38	.00	.00	15.30	15.35	20.59
750	38176.	36.4	2300	-.001	.001	.044	.00	21.03	.24	4.45	.00	.00	15.29	15.34	20.33
751	38177.	36.3	2520	.010	.005	.028	.00	22.20	.25	4.69	.00	.00	15.29	15.34	19.21
752	38178.	36.8	2640	.013	.016	.016	.00	24.15	.27	5.11	.00	.00	15.36	15.41	17.91
753	38179.	36.8	2560	.008	.011	.032	.00	22.66	.26	4.79	.00	.00	15.36	15.41	19.12
754	38180.	37.1	2660	.015	.017	.010	.00	23.39	.27	4.92	.00	.00	15.30	15.35	18.77
755	38181.	37.5	2820	.021	.015	.011	.00	25.21	.29	5.30	.00	.00	15.30	15.35	17.60
756	38182.	38.0	2260	.024	.032	.023	.00	24.32	.28	5.11	.00	.00	15.30	15.35	18.50
757	38183.	38.6	2260	.014	.018	.023	.00	23.41	.27	4.92	.00	.00	15.30	15.35	19.48
758	38184.	38.7	2660	.012	.029	.032	.00	26.65	.30	5.60	.00	.00	15.30	15.35	17.16
759	38185.	39.1	2940	.011	.011	.034	.00	29.31	.33	6.16	.00	.00	15.30	15.35	15.78
760	38186.	39.1	2460	.001	.017	.010	.00	21.19	.24	4.45	.00	.00	15.30	15.35	21.84
761	38187.	39.1	2420	.009	.001	.035	.00	22.61	.26	4.75	.00	.00	15.30	15.35	20.47
762	38188.	39.5	2420	.008	.001	.023	.00	21.20	.24	4.43	.00	.00	15.30	15.35	22.18
763	38189.	39.5	2480	-.008	.015	.038	.00	21.49	.24	4.49	.00	.00	15.30	15.35	21.87
764	38190.	39.2	2420	-.008	.016	.032	.00	20.10	.34	4.20	.00	.00	15.30	15.35	23.20
765	38191.	39.1	2320	.003	.024	.015	.00	19.71	.34	4.11	.00	.00	15.30	15.35	23.63
766	38192.	39.3	2160	.005	.011	.018	.00	18.61	.32	[illegible]	[illegible]	[illegible]	[illegible]	[illegible]	[illegible]
767	38193.	[illegible]	[illegible]	[illegible]	[illegible]	[illegible]	[illegible]	[illegible]	[illegible]	[illegible]	[illegible]	[illegible]	[illegible]	[illegible]	[illegible]

768	38194.	39.6	2380	.004	.004	.015	.00	19.03	.32	4.00	.00	.00	15.30	15.35	24.58
769	38195.	39.6	2380	-.008	-.001	.049	.00	18.19	.31	3.85	.00	.00	15.29	15.34	25.54
770	38196.	39.2	2380	-.017	-.014	.051	.00	12.40	.21	2.64	.00	.00	15.28	15.34	36.93
771	38197.	38.8	2340	-.014	-.018	.027	.00	13.55	.23	2.87	.00	.00	15.29	15.34	33.62
772	38198.	38.6	2040	-.012	-.015	-.001	.00	12.56	.21	2.64	.00	.00	15.29	15.34	36.32
773	38199.	38.3	1860	-.020	-.033	.015	.00	10.83	.12	2.25	.00	.00	15.30	15.35	42.33
774	38200.	37.8	2040	-.027	-.024	.010	.00	12.52	.21	2.60	.00	.00	15.31	15.35	36.11
775	38201.	37.1	2000	-.022	-.015	.013	.00	12.35	.21	2.58	.00	.00	15.30	15.35	35.75
776	38202.	36.8	1880	-.018	-.023	.022	.00	11.45	.19	2.39	.00	.00	15.30	15.35	38.26
777	38203.	36.3	1860	-.024	-.025	.026	.00	11.74	.20	2.45	.00	.00	15.37	15.43	36.78
778	38204.	35.8	1940	-.021	-.023	.024	.00	11.58	.20	2.42	.00	.00	15.37	15.43	36.75
779	38205.	35.4	1820	-.024	-.010	.042	.00	11.62	.20	2.41	.00	.00	15.38	15.43	36.47
780	38206.	34.7	1620	-.033	-.023	.072	.00	10.50	.18	2.18	.00	.00	15.38	15.43	39.61
781	38207.	33.9	1700	-.051	-.041	.127	.00	10.92	.12	2.27	.00	.00	15.38	15.43	37.23
782	38208.	32.5	1720	-.093	-.073	.122	.00	11.19	.19	2.34	.00	.00	15.37	15.43	34.55
783	38209.	29.9	1680	-.124	-.111	.097	.00	10.79	.12	2.27	.00	.00	15.36	15.41	32.71
784	38210.	27.0	1680	-.139	-.151	.062	.00	10.72	.12	2.25	.00	.00	15.36	15.41	29.82
785	38211.	23.8	1540	-.151	-.166	.053	.00	10.80	.12	2.24	.00	.00	15.37	15.43	26.35
786	38212.	20.4	1360	-.149	-.159	-.037	.00	10.61	.12	2.17	.00	.00	15.39	15.44	23.33
787	38213.	17.2	1300	-.083	-.174	-.219	.00	10.84	.18	2.18	.00	.00	15.40	15.46	19.67
788	38214.	16.8	1540	-.005	-.072	-.340	.00	12.78	.22	2.58	.00	.00	15.47	15.51	16.12
789	38215.	17.0	1940	.021	-.054	-.389	.00	21.39	.24	4.41	.00	.00	15.52	15.57	9.58
790	38216.	17.7	2020	.041	-.010	-.302	.00	26.67	.30	5.57	.00	.00	15.57	15.63	7.88
791	38217.	18.8	2600	.050	.048	-.173	.00	32.59	.37	6.85	.00	.00	15.57	15.62	6.82
792	38218.	19.9	2440	.051	.062	-.128	.00	30.21	.34	6.34	.00	.00	15.57	15.63	7.78
793	38219.	21.0	2440	.059	.058	-.125	.00	29.70	.34	6.24	.00	.00	15.57	15.63	8.38
794	38220.	22.4	2600	.049	.074	-.129	.00	31.08	.53	6.53	.00	.00	15.50	15.56	8.53
795	38221.	23.2	2920	.035	.045	-.170	.00	35.65	.40	7.49	.00	.00	15.50	15.56	7.69
796	38222.	24.0	2760	.037	.030	-.142	.00	35.87	.61	7.53	.00	.00	15.43	15.49	7.90
797	38223.	24.8	2640	.036	.047	-.094	.00	34.75	.59	7.35	.01	.00	15.34	15.40	8.36
798	38224.	25.5	2420	.022	.049	-.014	.00	24.44	.42	5.17	.02	.01	15.32	15.38	12.20
799	38225.	25.8	1760	-.010	.000	.006	.00	13.50	.23	2.84	.01	.01	15.32	15.38	22.43
800	38226.	25.1	1640	-.052	-.022	.002	.00	11.83	.20	2.48	.01	.01	15.32	15.38	24.92
801	38227.	23.5	1360	-.097	-.099	.014	.00	10.13	.11	2.10	.01	.00	15.35	15.40	27.65
802	38228.	20.9	1400	-.130	-.138	.009	.00	10.86	.25	2.25	.00	.00	15.37	15.43	22.97
803	38229.	17.8	1320	-.117	-.164	.181	.00	10.69	.18	2.22	.00	.00	15.37	15.43	19.89
804	38230.	15.7	1580	-.037	-.095	.333	.00	12.23	.21	2.55	.00	.00	15.36	15.41	15.27
805	38231.	16.1	1920	.027	-.025	.319	.00	22.77	.39	4.78	.01	.00	15.35	15.41	8.37
806	38232.	16.9	2420	.046	.043	.331	.00	30.64	.52	6.44	.01	.00	15.35	15.41	6.51
807	38233.	18.1	2400	.050	.057	.174	.00	29.91	.34	6.28	.01	.00	15.36	15.41	7.16
808	38234.	19.1	2540	.049	.076	.031	.00	32.28	.37	6.83	.01	.00	15.35	15.40	6.94
809	38235.	20.3	2740	.031	.076	.011	.00	33.61	.38	7.11	.02	.00	15.33	15.38	7.06
810	38236.	20.5	2320	-.003	.018	.047	.00	17.43	.10	3.71	.01	.01	15.31	15.37	13.63
811	38237.	20.1	2400	-.053	-.001	.050	.00	16.37	.19	3.48	.02	.01	15.23	15.28	14.24
812	38238.	18.1	1880	-.122	-.113	-.003	.00	12.05	.07	2.52	.01	.01	15.25	15.31	17.78
813	38239.	14.8	1500	-.099	-.190	-.259	.00	10.82	.12	2.26	.01	.01	15.26	15.33	16.21
814	38240.	13.8	1500	-.009	-.093	-.334	.00	12.77	.22	2.65	.01	.00	15.27	15.33	12.89
815	38241.	14.4	1760	.039	-.038	-.320	.00	21.50	.24	4.46	.01	.00	15.28	15.34	8.01
816	38242.	15.5	2360	.069	.050	-.139	.00	31.59	.54	6.59	.01	.00	15.35	15.41	5.83
817	38243.	17.5	2500	.091	.106	.005	.00	35.83	.41	7.53	.01	.00	15.36	15.41	5.76
818	38244.	19.5	2780	.087	.094	.016	.00	38.28	.43	8.04	.00	.00	15.36	15.41	6.03
819	38245.	21.3	2820	.068	.096	.000	.00	36.23	.41	7.61	.00	.00	15.37	15.41	6.95
820	38246.	22.5	2740	.038	.061	.025	.00	29.50	.33	6.20	.00	.00	15.37	15.41	9.03
821	38247.	23.0	2520	.028	.035	-.003	.00	23.30	.26	4.90	.00	.00	15.36	15.41	11.64
822	38248.	23.8	1980	.018	.035	-.006	.00	18.06	.20	3.79	.00	.00	15.29	15.34	15.54

823	38249.	23.8	1600	-.004	.001	.009	.00	11.66	.13	2.45	.00	.00	15.28	15.34	24.06
824	38250.	23.6	1420	-.014	-.010	.024	.00	9.85	.17	2.08	.00	.00	15.27	15.33	28.04
825	38251.	23.1	1520	-.037	-.028	.028	.00	10.79	.18	2.27	.00	.00	15.29	15.34	25.33
826	38252.	22.0	1520	-.053	-.067	.038	.00	10.79	.18	2.27	.00	.00	15.29	15.34	24.04
827	38253.	20.8	1420	-.089	-.089	.010	.00	10.55	.18	2.20	.00	.00	15.30	15.35	23.44
828	38254.	18.0	1200	-.111	-.137	.110	.00	9.88	.17	2.06	.00	.00	15.37	15.43	21.72
829	38255.	15.9	1400	-.053	-.097	.238	.00	10.79	.18	2.25	.00	.00	15.36	15.41	17.57
830	38256.	15.7	1380	-.010	-.042	.295	.00	10.00	.17	2.09	.01	.00	15.34	15.40	18.61
831	38257.	15.5	2120	.017	-.030	.340	.00	24.97	.42	5.25	.02	.01	15.33	15.38	7.31
832	38258.	16.5	2540	.049	.045	.241	.00	32.58	.74	6.80	.02	.01	15.33	15.38	5.98
833	38259.	17.7	2800	.061	.089	.047	.00	39.22	.67	8.24	.02	.00	15.34	15.40	5.30
834	38260.	19.1	2780	.075	.101	.035	2.52	38.66	.66	8.12	.01	.00	15.36	15.41	5.85
835	38261.	21.0	2980	.087	.126	.011	3.81	41.40	.70	8.70	.00	.00	15.29	15.34	5.98
836	38262.	23.0	3060	.080	.117	.016	4.10	42.78	.73	9.05	.00	.00	15.29	15.34	6.30
837	38263.	24.5	2880	.056	.117	.016	3.75	37.21	.63	7.82	.00	.00	15.29	15.34	7.77
838	38264.	25.4	2600	.038	.081	.036	3.15	28.64	.49	6.02	.01	.00	15.29	15.34	10.48
839	38265.	26.1	2380	.033	.041	.028	2.33	27.36	.31	5.75	.01	.00	15.28	15.34	11.27
840	38266.	26.9	2080	.019	.028	.026	.00	21.23	.24	4.43	.01	.00	15.28	15.34	15.00
841	38267.	27.0	1760	.012	.008	.032	.00	16.73	.19	3.49	.01	.00	15.28	15.34	19.14
842	38268.	27.4	1960	.014	.022	.036	.00	18.14	.21	3.76	.01	.00	15.29	15.34	18.02
843	38269.	27.6	1940	.003	.012	.031	.00	17.89	.20	3.76	.00	.00	15.28	15.34	18.21
844	38270.	27.5	1940	-.015	.001	.021	.00	12.98	.15	2.76	.01	.00	15.26	15.33	24.67
845	38271.	27.0	1880	-.021	.001	.026	.00	12.48	.14	2.64	.01	.00	15.26	15.31	25.25
846	38272.	26.6	1620	-.021	-.017	.020	.00	11.02	.12	2.30	.01	.01	15.26	15.33	28.59
847	38273.	26.0	1480	-.054	-.030	.020	.00	10.36	.12	2.15	.01	.01	15.27	15.33	29.94
848	38274.	24.2	1360	-.102	-.090	.025	.00	9.66	.05	1.98	.00	.00	15.30	15.35	30.36
849	38275.	21.6	1620	-.135	-.133	-.017	.00	11.90	.14	2.45	.00	.00	15.30	15.35	21.83
850	38276.	18.3	1460	-.166	-.160	-.196	.00	11.57	.13	2.39	.00	.00	15.31	15.35	19.09
851	38277.	14.3	1460	-.155	-.227	-.354	.00	10.36	.12	2.15	.00	.00	15.38	15.43	16.52
852	38278.	11.5	1140	-.090	-.152	-.253	.00	9.18	.10	1.92	.00	.00	15.37	15.43	14.94
853	38279.	10.3	1100	-.077	-.105	-.212	.00	9.47	.11	2.00	.00	.00	15.36	15.41	12.83
854	38280.	8.1	1300	-.102	-.137	-.073	.00	9.89	.11	2.10	.00	.00	15.35	15.40	9.60
855	38281.	5.9	1420	-.080	-.110	.076	.00	11.65	.13	2.48	.00	.00	15.35	15.40	5.87
856	38282.	4.6	1240	-.063	-.048	.050	.00	10.91	.12	2.32	.00	.00	15.35	15.40	4.94
857	38283.	3.1	1200	-.105	-.087	.013	.00	10.92	.12	2.31	.00	.00	15.36	15.41	3.32
858	38284.	.0	1080	-.070	-.125	.028	.00	10.06	.11	2.11	.00	.00	15.36	15.41	.00
859	38285.	.0	1000	.000	-.020	.036	.00	9.72	.11	2.02	.00	.00	15.38	15.43	.00
860	38286.	.0	980	.000	-.005	.039	.00	8.63	.10	1.77	.00	.00	15.39	15.44	.00
861	38287.	.0	1080	.000	-.007	.041	.00	9.28	.11	1.90	.00	.00	15.39	15.44	.00
862	38288.	.0	1080	.000	-.007	.040	.00	9.24	.10	1.89	.00	.00	15.39	15.44	.00
863	38289.	.0	940	.000	-.009	.037	.00	7.91	.09	1.63	.00	.00	15.45	15.50	.00
864	38290.	.0	1040	.000	-.009	.041	.00	8.75	.10	1.82	.00	.00	15.45	15.50	.00
865	38291.	.0	1060	.000	-.006	.041	.00	9.37	.11	1.96	.00	.00	15.44	15.50	.00

C:\MPV\07206.OAT 8/12/93

TIME (SEC)	DIST (MI)	AVG SPD MPH	MAX SPD MPH	MAX ACCL G's	MIN ACCL G's	PKE (miles/ hr^2)	OVER_FTP_ACCL # OF SECS	OVER_FTP_ACCL % OF Time	FUEL # OF Gal.	FUEL ECON mpg	--- EMISSIONS PER MILE --- EXHAUST g/mi	HC mg/mi	CO2 g/mi	CO g/mi
865	8.75	36.4	65.6	.231	-.445	17747.6	13	1.493	.47	18.6	2293.46	60.35	477.82	2.36

```
      PROGRAM LUMNA_EM
C ------------------------------------------------------------------------
C THIS PROGRAM READS IN 2 LUMINA DATA FILES AND CALCULATES THE EMISSIONS
C AND FUEL CONSUMPTION ALONG WITH OTHER DRIVING CHARACTERISTICS.  THESE
C VALUES ARE WRITTEN TO A SECOND BY SECOND OUTPUT FILE AND A SUMMARY
C OUTPUT FILE.
C
C AUTHOR:  JOHN LEE
C DATE:    08/10/93
C
C Copyright © 1993 Sierra Research, Inc.
C
C ------------------------------------------------------------------------
C *****  DEFINITIONS  *****
C  ACCL(*) = LONGITUDINAL ACCELERATION (g's)
C  ALAT(*) = LATERAL ACCELERATION (g's)
C  SPD(*) = PATROL CAR SPEED (mph)
C  ONRDAXL(*) = ON ROAD ACCELERATION (g's)
C  PRESS = MANIFOLD AIR PRESSURE (volts)
C  ATM(*) = MANIFOLD AIR PRESSURE (atmospheres)
C  OXS(*)  = AVERAGE Oxygen sensor (volts)
C  THRTL(*) = THROTTLE POSITION (volts)
C  SECS(*) = DURATION DURING RUN (seconds)
C  GTIME(*) = TIME OF DAY ON THE GAS FILE (seconds since midnight)
C  TIME(*) = TIME OF DAY (seconds since midnight)
C  RPM(*) = ENGINE SPEED (rpm)
C  COOL(*) = COOLANT TEMPERATURE (volts)
C  TEMP = MANIFOLD AIR TEMPERATURE (volts)
C  FTEMP(*)= MANIFOLD AIR TEMPERATURE (deg. C)
C  CTEMP(*) = COOLANT TEMPERATURE (DEG. C)
C  OX(*) = OXYGEN IN EXHAUST
C  HC(*) = HYDROCARBON IN EXHAUST
C  CO(*) = CARBON MONOXIDE IN EXHAUST
C  CO2(*) = CARBON DIOXIDE IN EXHAUST
C  FCARB = WEIGHT FRACTION OF FUEL THAT IS CARBON (INDOLENE IS 0.866)
C  RESM = INTERNAL RESISTANCE FOR MANIFOLD AIR TEMPERATURE (ohms)
C  RESC = INTERNAL RESISTANCE FOR COOLANT TEMPERATURE (ohms)
C  AIRV(*) = VOLUME OF AIR (l/sec)
C  AIRM(*) = MASS OF AIR (gm/sec)
C  FUELM(*) = MASS OF FUEL (gm/sec)
C  EXHM(*) = MASS OF EXHAUST (gm/sec)
C  EXMOL(*) = EXHAUST (grams/mole)
C  EXGMOL(*) = EXHAUST (gmole/sec)
C  EXHC(*) = EXHAUST HC AS PROPANE (mg/sec)
C  EXCO2(*) = EXHAUST CO2 (g/sec)
C  EXCO(*) = EXHAUST CO(g/sec)
C  GRADE(*) = % GRADE OF THE ROADWAY WHILE MOVING
C
C
C
C  NAMING INTEGERS
C
      INTEGER CARDATA,GASDATA,SECS(5000),
     +RESC,OVRFTP,RPM(5000)
      REAL PRESS, TEMP, HYDROC
      CHARACTER*20 CCO,CAR
      CHARACTER*30 CTYME,DATE
      CHARACTER*130 HDR1,HDR2,SUMHDR1,SUMHDR2,SUMHDR3,SUMHDR4
      CHARACTER*12 INPUT1,INPUT2,SIERROUT,SIERROAT
C
C  DIMENSIONING ARRAYS (VARIABLE LENGTH FILES WITH A MAXIMUM OF 5000 RECORDS)
```

```
C
      DIMENSION SPD(5000),THRTL(5000),COOL(5000),
     + ACCL(5000),ALAT(5000),FTEMP(5000),OXS(5000),
     + CO2(5000),CO(5000),OX(5000),ATM(5000),AIRV(5000),
     + AIRM(5000),FUELM(5000),GRADE(5000),TIME(5000),
     + ONRDAXL(5000),EXHC(5000),EXCO2(5000),EXCO(5000),
     + R(5000),Q(5000),FB(5000),AF(5000),DIST(5000),
     + EXGMOL(5000),EXMOL(5000),EXHM(5000),HC(5000),
     + UNK(5000),AFGAS(5000),TG(5000),GTIME(5000)

C
C  REQUEST INPUT FILES AND OUTPUT FILE NAMES
C
       WRITE(*,*)'ENTER THE FIRST INPUT FILE WITH ".PRN" EXTENSION'
       READ(*,FMT='(A)') INPUT1
       WRITE(*,*)'ENTER CORRESPONDING INPUT FILE WITH ".DOT" EXTENSION'
       READ(*,FMT='(A)') INPUT2
       WRITE(*,*)'ENTER SECOND BY SECOND OUTPUT FILE NAME'
       READ(*,FMT='(A)') SIERROUT
       WRITE(*,*)'ENTER SUMMARY OUTPUT FILE NAME'
       READ(*,FMT='(A)') SIERROAT
C
C   OPEN FILES
C
      OPEN (UNIT=2,FILE='LUMNAHDR.DAT', STATUS='OLD')
      OPEN (UNIT=3,FILE=INPUT1, STATUS='OLD')
      OPEN (UNIT=4,FILE=INPUT2, STATUS='OLD')
C
      OPEN (UNIT=5,FILE=SIERROUT, STATUS='UNKNOWN',RECL=132,
     +    ACCESS='APPEND')
C
      OPEN (UNIT=7,FILE=SIERROAT, STATUS='UNKNOWN', RECL=132,
     +    ACCESS='APPEND')
C
C
C*******  INITIALIZE VALUES  ***********
C
      CARDATA=3
      GASDATA=4
      AXSPD=0.0
      PKE=0.0
      TTLDST=0.0
      NHC=0
      NEGHC=0
C
C ESTIMATED WEIGHT FRACTION OF FUEL
C
      FCARB = 0.866
C
C ESTIMATED INTERNAL RESISTANCE FOR COOLANT TEMP
C
      RESC =  330
C
C *** VOLUMETRIC EFFICIENCY ****
C
       VOLEFF = 0.75
C
C***   READ IN LUMINA DATA  ***
C
      READ(CARDATA, 11)CCO
      READ(CARDATA, 11)CAR
      READ(CARDATA, 12)CTYME
```

```
      READ(CARDATA, 12)DATE
      READ(CARDATA, 13)HDR1
      READ(CARDATA, 13)HDR2
 11   FORMAT(A20)
 12   FORMAT(A30)
 13   FORMAT(A130)
C
  5   N=N+1
      READ(CARDATA, *, ERR=999,END=999)ACCL(N),ALAT(N),SPD(N),PRESS
     +,OXS(N),THRTL(N),SECS(N),TIME(N),RPM(N),COOL(N),TEMP
      IF (SPD(N).LT.0.1) SPD(N)=0.0
C
C *** CALCULATE LUMINA PERFORMANCE CHARACTERISTICS ***
C
      ATM(N) = PRESS/100
      Z =((0.00493*(LOG(TEMP))**3)-(.00295*LOG(TEMP))+.003719)
      IF (Z .EQ. 0.0) Z=1
      FTEMP(N)=(1/Z)-273

      GOTO 5
 999  N=N-1
C
C *** CALCULATE ON ROAD ACCELERATION, DISTANCE AND CLEAN RPM ***
C
      DO 27 M=2,N
       ONRDAXL(M)=((SPD(M+1)-SPD(M-1))*88/(2*60*32.15))
       DIST(M)=(SPD(M)/3600)
       IF (RPM(M) .GT. 8000) THEN
        RPM(M)=((RPM(M-1)+RPM(M+1))/2)
       ENDIF
   27 CONTINUE
      DO 28 M=1,N
       AIRV(M)=(RPM(M)*3.1*VOLEFF/(2*60))
       AIRM(M)=(ATM(M)*AIRV(M)*28.96)/(0.08205*((FTEMP(M)+273)))
   28 CONTINUE
C
C     DO THE GRADE CALCULATION
C     DON'T FORGET TO SET THE CAR TYPE
C
      ICAR=1
      CALL GCALC(N,ACCL,ALAT,SPD,GRADE,ICAR,IFLAG)
C
C***   READ IN LUMINA EXHUAST DATA  ***
C
      L=0
C
 15   L=L+1
      IF (L .EQ. 601) L=610
      READ(GASDATA, *,ERR=998,END=998)HYDROC,CO(L),CO2(L),OX(L),
     + GTIME(L),UNK(L),AFGAS(L)
C
C*** GAS CONCENTRATIONS MEASURED AS HEXANE EQUIVALENT ARE DOUBLED
C    TO REPRESENT EXHUAST HYDROCARBONS
C
      HC(L)=2*HYDROC
      IF (L .GE. N) GOTO 886
      IF (HC(L).LT.0) THEN
       NHC=1
       IF (HC(L) .LT. NEGHC) NEGHC=HC(L)
      ENDIF
      GOTO 15
 998  L=L-1
```

```
C
C *** 5 SECOND DELAY IN GAS READINGS ***
C
 886  DO 137 I=6,L
       HC(I-5)=HC(I)
       CO(I-5)=CO(I)
       CO2(I-5)=CO2(I)
       OX(I-5)=OX(I)
       GTIME(I-5)=GTIME(I)
       UNK(I-5)=UNK(I)
       AFGAS(I-5)=AFGAS(I)
 137  CONTINUE
       L=L-5
C
C **** SHIFT HC VALUES IF HC OFFSET IS NEGATIVE ***
C
      IF (NHC .EQ. 0) GOTO 888
      DO 140 I=1,L
       HC(I)=HC(I)-NEGHC
 140  CONTINUE
C
C**** CALCULATE EXHAUST GAS RELATIONSHIPS R, Q, FB, and AF ****
C
 888  DO 150 J=1,L
       IF (J .GT. 595 .AND. J .LT.605) THEN
        R(J)=0
        Q(J)=0
        FB(J)=0
        AF(J)=0
        EXMOL(J)=0
        GOTO 150
       ENDIF
       R(J)= CO(J)/CO2(J)
       Q(J)= OX(J)/CO2(J)
       FB(J)= ((CO(J)+CO2(J))/(CO(J)+CO2(J)+HC(J)/1000))
       AF(J)= (FB(J)*11.492*FCARB*((1+.5*R(J)+Q(J))/(1+R(J)))
     + +(120*(1-FCARB)/(3.5+R(J))))
       EXMOL(J)=(CO2(J)*44+CO(J)*28+OX(J)*32+(HC(J)*86/10000)+
     + (100-CO2(J)-CO(J)-OX(J)-(HC(J)/10000))*28)/100
 150  CONTINUE
C
C *** CALCULATE MASS OF FUEL IN GM/SEC ***
C
      DO 160 K=1,L
       IF (K .GT. 595 .AND. K .LT. 605) THEN
        FUELM(K)=0
        EXHM(K)=0
        EXGMOL(K)=0
        EXHC(K)=0
        EXCO2(K)=0
        EXCO(K)=0
        GOTO 160
       ENDIF
       FUELM(K)=AIRM(K)/AF(K)
C
C MASS EXHAUST = MASS AIR + MASS FUEL - MASS WATER
C
       EXHM(K)=AIRM(K)+FUELM(K)-(FUELM(K)*(1-.866)*FB(K)*18/2)
       EXGMOL(K)=EXHM(K)/EXMOL(K)
       EXHC(K)=1000*(EXGMOL(K)*HC(K)*86/1000000)
       EXCO2(K)=EXGMOL(K)*44*CO2(K)/100
       EXCO(K)=EXGMOL(K)*28*CO(K)/100
```

```
 160  CONTINUE

      DO 165 K=2,L
       IF (K .GT. 595 .AND. K .LT. 605) THEN
        TG(K)=0
        GOTO 165
       ENDIF
        G=(((EXHC(K)/1000)*72/86+EXCO2(K)*12/44+
     +  EXCO(K)*12/28)/(.866*454.5*6.2))
        IF (G .EQ. 0) G=0.000001
        TG(K)=DIST(K)/G
 165  CONTINUE
C
      DO 170 M=1,L
       CUMHM=EXHM(M)+CUMHM
       CUMHC=EXHC(M)+CUMHC
       CUMCO2=EXCO2(M)+CUMCO2
       CUMCO=EXCO(M)+CUMCO
       IF (M .GT. 595 .AND. M .LT. 605) GOTO 170
       TTLDIST = TTLDIST+DIST(M)
       TTLSPD = TTLSPD+SPD(M)
       IF (DIST(M).GT.0.) THEN
        PKP=(((SPD(M))**2) - ((SPD(M-1))**2))
         IF (PKP.GT.0.) THEN
          PKE=PKE+PKP
         ENDIF
       ENDIF
C
C ***  FIND MAXIMUM SPD AND ON ROAD ACCELERATIONS ***
C
       IF (SPD(M).GT.AXSPD) THEN
        AXSPD=SPD(M)
       ENDIF
       IF (ONRDAXL(M).GT.AXONRD) THEN
        AXONRD=ONRDAXL(M)
       ENDIF
C
C ***  FIND MINIMUM ON ROAD ACCELERATIONS ***
C
       IF (ONRDAXL(M).LT.EGONRD) THEN
        EGONRD=ONRDAXL(M)
       ENDIF
C
C ***  FIND FRACTION OF ACCELERATIONS OVER 3.3 MPH/S
C
       IF ((SPD(M)-SPD(M-1)).GT. 3.3) THEN
        OVRFTP=OVRFTP+1
       ENDIF
 170  CONTINUE


      FTPER=100*FLOAT(OVRFTP)/N

       TGAL=((CUMHC/1000)*72/86+CUMCO2*12/44+CUMCO*12/28)/
     + (.866*454.5*6.2)
       EMPG=TTLDIST/TGAL
       ECUMHM=CUMHM/TTLDIST
       ECUMHC=CUMHC/TTLDIST
       ECUMCO2=CUMCO2/TTLDIST
       ECUMCO=CUMCO/TTLDIST
       AVGSPD=TTLSPD/L
C
```

```
C****** WRITE TO OUTPUT FILE ********
C
      WRITE(5,220)
      DO 700 K=1,L
      WRITE(5,200) K,TIME(K),SPD(K),RPM(K),
     +ONRDAXL(K),ACCL(K),ALAT(K),GRADE(K),
     +EXHM(K),EXHC(K),EXCO2(K),EXCO(K),
     +R(K),AF(K),AFGAS(K),TG(K)
 700  CONTINUE
C
 200  FORMAT(I7,F7.0,F7.1,1X,I6,1X,
     +3(F5.3,1X),F6.2,1X,
     +7(F7.2),1X,F8.2)
 220  FORMAT(' SEC     TIME   SPEED   RPM   ONRD   ACCL  ALAT  GRADE
     +EXHM   EXHCM EXCO2M  EXCOM   R   A/F CALC  A/F ANL  MPG',/,
     +'          SEC    MPH            (G s) (G s) (G s)    (%)    grams
     + Mg   grams   grams       ratio     ratio    sec',/,
     +'==================================================================
     +==================================================')
C
C*** WRITE summary OUTPUT TO ANOTHER FILE ***
C
C
      READ(2,345)SUMHDR1,SUMHDR2,SUMHDR3,SUMHDR4
      WRITE(7,345)SUMHDR1,SUMHDR2,SUMHDR3,SUMHDR4
C
 345  FORMAT(A130,/,A130,/,A130,/,A130)
C
      WRITE(7,350)L,TTLDIST,AVGSPD,AXSPD,AXONRD, EGONRD,
     +PKE,OVRFTP,FTPER,TGAL,EMPG,
     +ECUMHM,ECUMHC,ECUMCO2,ECUMCO
C
 350  FORMAT(I5,1X,F5.2,2(1X,F5.1),2(1X,F5.3),
     +1X,F7.1,1X,I5,1X,F6.3,1X,F7.2,1X,F5.1,
     +4(1X,F7.2))
C
C
      CLOSE (4)
      CLOSE (3)
      CLOSE (7)
      CLOSE (5)

      END
C
C
      SUBROUTINE GCALC(N,ACC,ALAT,VEL,GRADE,ICAR,IFLAG)
C
C     CALCULATE GRADE FROM LONGITUDINAL ACCELEROMETER AND
C     SPEED DATA. PROGRAM SCREENS OUT ACCELEROMETER NOISE
C     BY INTEGRATING ELEVATION CHANGE FOR TSEC SEC. IF THE
C     ELEVATION CHANGE IS LESS THAN ELIM FT THE REGION IS
C     SET TO ZERO. GRADE IN THE NON ZERO REGIONS IS SMOOTHED
C     USING AN ISEC SECOND MOVING AVERAGE. INPUT DATA IS
C     ASSUMED TO BE SECOND BY SECOND VALUES.
C
C     GTEST V0.B JWT 19JUN92
C
C     INPUT ARGUMENTS
C
C     N        = NO. OF ACCELERATION AND VELOCITY VALUES
C     ACC      = LONGITUDINAL ACCELERATION ARRAY (G'S)
C     ALAT     = LATERAL ACCELERATION ARRAY (G'S)
```

```
C       VEL      = VELOCITY ARRAY (MI/HR)
C       ICAR     = VEHICLE FLAG; 1=LUMINA, 2=CAPRICE
C
C       RETURNED ARGUMENTS
C
C       GRADE    = COMPUTED GRADE (RAD OR %)
C       IFLAG    =  RETURN CODE; 0=OK, 1= ARRAY CHECK,
C                                2=MEAN ERROR IN ACCELERATION
C
C       ADJUSTABLE PARAMETERS
C
        PARAMETER (ELIML=4.25, ELIMC=7.5, ITIME=5, NPOINT=5)
        PARAMETER (SLIM=0.03, M=10000)
C
C       ELIML    = CUTOFF ELEVATION FOR LUMINA (FT)started @ 3.5
C       ELIMC    = CUTOFF ELEVATION FOR CAPRICE (FT)started @ 6.5
C       ITIME    = INTEGRATION TIME FOR ELEVATION CHANGE (SEC)
C       NPOINT   = NO. OF POINTS FOR MOVING AVERAGE .
C       SLIM     = CUTTOFF FOR ACCELERATION MEAN (G'S)
C       M        = ARRAY LIMITS
C
C       PHYSICAL CONSTANTS
C
        PARAMETER (G=32.15, CMITOFT=1.4666667)
C
        DIMENSION ACC(N),ALAT(N),VEL(N),GRADE(N),TEMP(M),IFILTER(M)
C
C       CHECK ARRAY LIMITS - RETURN IF NOT ENOUGH STORAGE
C
        IFLAG=0
        IF (N .GT. M) THEN
         IFLAG=1
         RETURN
        ENDIF
C
C       SET ELEVATION LIMIT FOR VEHICLE - DEFAULTS TO CAPRICE
C
        IF (ICAR .EQ. 1) THEN
         ELIM=ELIML
        ELSE
         ELIM=ELIMC
        ENDIF
C
C       CONVERT MEASURED ACCELERATION TO ZERO MEAN
C
        SUM=0.0
        DO 10 I=1,N
        SUM=SUM+ACC(I)
 10     CONTINUE
        SUM=SUM/FLOAT(N)
        DO 20 I=1,N
        ACC(I)=ACC(I)-SUM
 20     CONTINUE
        IF (ABS(SUM) .GT. SLIM) THEN
         IFLAG=2
        ENDIF
C
C       COMPUTE ACCELERATION FROM SPEED
C       COMPUTE GRADE (%) FROM TWO ACCELERATION VALUES
C       STORE IN TEMP ARRAY FOR SMOOTHING LATER
C       INITIALIZE FILTER ARRAY
C
```

```
      TEMP(1)=0.0
      TEMP(N)=0.0
      IFILTER(1)=0
      IFILTER(N)=0
      DO 30 I=2,N-1
      TEMP(I)= ACC(I)-CMITOFT*(VEL(I+1)-VEL(I-1))/2.0/G
      IFILTER(I)=0
   30 CONTINUE
C
C     COMPUTE ELEVATION FOR NOISE FILTERING
C
      NSTEP=(N-2)/ITIME
C     DO 60 J=1,NSTEP
      DO 60 J=1,N
      ELEV=0.0
      IST=ITIME*(J-1)
C
C     DO 40 I=IST+1,IST+ITIME
      DO 40 I=J+1,J+ITIME
      ELEV=ELEV+TEMP(I)*VEL(I)
        IF (ABS(ALAT(I)).GE.0.25 .AND. VEL(I).LT.25.) ELEV=0.0
 40   CONTINUE
C
C     INCLUDE ONLY REGIONS WHERE ELEVATION CHANGE IS .GE. ELIM
C
      IF (ABS(ELEV) .GE. ELIM) THEN
C      DO 50 I=IST+1,IST+ITIME
       DO 50 I=J+1,J+ITIME
       IFILTER(I)=1
 50    CONTINUE
      ENDIF
 60   CONTINUE
C
C     DO NOT CALCULATE GRADE WHEN TURNING OVER .25 G'S AND SPEED UNDER 25 MPH
C
      DO 65 I=2,N-2
       IF (ABS(ALAT(I)).GE.0.25 .AND. VEL(I).LT.25.) IFILTER(I)=0
   65   CONTINUE
C
C     NPOINT MOVING AVERAGE TO SMOOTH THE GRADE
C
      IW=NPOINT/2
      I1=IW+1
      I2=N-IW
C
C     ZERO END VALUES NOT INCLUDED IN MOVING AVERAGES
C
      DO 70 I=1,IW
      GRADE(I)=0.0
      GRADE(N+1-I)=0.0
 70   CONTINUE
C
C     INITIALIZE MOVING AVERAGE SUM
C
      SUM=0.0
      DO 80 I=1,NPOINT
      SUM=SUM+TEMP(I)
 80   CONTINUE
C
C     COMPUTE MOVING AVERAGES
C     SHIFT MOVING AVERAGE SUM
C
```

```
      DO 90 I=I1,I2
      IF (IFILTER(I) .EQ. 1) GRADE(I)=SUM/FLOAT(NPOINT)
      SUM=SUM-TEMP(I-IW)+TEMP(I+IW+1)
 90   CONTINUE
C
        DO 95 I=1,N
         GRADE(I)=GRADE(I)*100
 95     CONTINUE
C
        RETURN
      END
```

APPENDIX J

Sample Data Set Illustrating Grade Measurement

LABTECH NOTEBOOK
Data file
The time is 15:23:45.64.
The date is 6-09-1992.

accel1 G'S	accel2 G'S	SPEED MPH	MAP VOLTS	O2 SENS AVG VLTS	THROTTLE VOLTS	DURATION SECS	CUMTIME SECS	ENG SPD RPM
2.045	1.881	0	2.07	0.4639	0.725	0	55427.3	0
2.05	1.885	0.04	2.075	0.458	0.732	1	55428.3	880
2.033	1.885	-0.1	2.102	0.4634	0.72	2	55429.3	880
2.036	1.874	-0.1	2.119	0.469	0.718	3	55430.3	860
2.039	1.888	0	2.266	0.4771	0.723	4	55431.3	840
2.033	1.878	-0.1	2.361	0.4829	0.725	5	55432.3	740
2.026	1.88	0	2.449	0.4917	0.725	6	55433.3	700
2.022	1.883	1.62	2.454	0.4912	0.732	7	55434.3	680
2.016	1.906	2.42	2.529	0.4897	0.737	8	55435.3	760
1.972	1.922	3.57	2.344	0.4844	0.735	9	55436.3	1020
2	1.95	4.52	2.241	0.5132	0.732	10	55437.3	980
2.032	1.941	5.14	2.319	0.5225	0.718	11	55438.3	800
2.105	1.921	4.04	2.336	0.52	0.715	12	55439.3	860
2.1	1.9	2.71	2.4	0.5269	0.732	13	55440.3	780
2.029	1.914	3.19	2.48	0.5366	0.718	14	55441.3	800
2.048	1.953	3.95	2.388	0.5354	0.715	15	55442.3	820
2.046	1.982	4.47	2.148	0.5313	0.73	16	55443.3	820
2.084	1.931	3.61	2.19	0.533	0.723	17	55444.3	820
2.118	1.919	0.62	2.305	0.5327	0.723	18	55445.3	760
2.151	1.893	0.04	3.018	0.5093	1.113	19	55446.3	940
2.283	1.894	4.85	3.384	0.5325	1.255	20	55447.3	1640
2.213	1.846	8.9	3.052	0.5637	1.252	21	55448.3	1820
2.153	1.882	11.76	2.722	0.5208	1.052	22	55449.3	1960
2.124	1.921	12.99	2.256	0.6409	1.05	23	55450.3	1860
2.05	1.914	13.9	2.109	0.3809	1.028	24	55451.3	1980
2.062	1.903	14.66	2.053	0.4028	0.732	25	55452.3	1520
2.052	1.85	14.66	1.724	0.5	0.74	26	55453.3	1140
1.978	1.9	14.61	1.714	0.7136	0.73	27	55454.3	1080
2.027	1.885	14.56	1.807	0.687	0.72	28	55455.3	1060
2.014	1.898	13.99	1.848	0.3984	0.72	29	55456.3	1020
1.976	1.865	12.47	1.973	0.4075	0.728	30	55457.3	1000
1.929	1.858	9.04	2.239	0.6973	0.72	31	55458.3	860
1.832	1.907	4.9	2.202	0.7063	0.71	32	55459.3	860
1.842	1.926	0.14	2.373	0.7085	0.725	33	55460.3	760
1.983	1.891	0	2.434	0.6833	0.735	34	55461.3	760
2.121	1.876	2.23	3.176	0.5662	1.135	35	55462.3	1060
2.258	1.92	6.61	3.457	0.3735	1.423	36	55463.3	1800
2.291	2.058	10.61	3.55	0.5166	1.536	37	55464.3	2240
2.215	2.128	14.56	3.13	0.6296	1.357	38	55465.3	2340
2.154	2.056	17.18	3.918	0.4326	1.707	39	55466.3	2480
2.221	1.942	20.61	3.599	0.6274	1.506	40	55467.3	2380
2.146	1.927	22.13	2.275	0.5461	0.72	41	55468.3	2000
1.941	1.915	21.04	1.682	0.4326	0.73	42	55469.3	1660
1.972	1.892	20.09	2.598	0.2981	1.147	43	55470.3	1280
2.128	1.874	21.37	3.772	0.5007	1.616	44	55471.3	2180
2.104	1.857	23.99	3.154	0.46	1.243	45	55472.3	2320
2.092	1.89	24.99	3.142	0.4492	1.143	46	55473.3	1900
2.085	1.9	25.61	3.135	0.6729	1.057	47	55474.3	1720
2.099	1.879	25.94	2.139	0.7214	0.728	48	55475.3	1420
2.03	1.874	25.7	1.797	0.0171	0.732	49	55476.3	1200
2.028	1.9	25.23	1.692	0.4905	0.728	50	55477.3	1200
2.071	1.926	24.99	3.386	0.656	1.194	51	55478.3	1260
2.115	1.853	25.75	2.932	0.7363	0.979	52	55479.3	1840
2.063	1.908	25.7	2.805	0.5776	0.889	53	55480.3	1500
2.046	1.879	25.99	2.517	0.3423	0.881	54	55481.3	1380
1.992	1.916	25.94	2.463	0.0247	0.908	55	55482.3	1320
2.036	1.905	25.85	3.967	0.0771	1.423	56	55483.3	1480
2.068	1.895	27.51	2.991	0.4753	1.123	57	55484.3	2060
2.032	1.882	27.89	2.273	0.7737	0.742	58	55485.3	1680
2.046	1.855	27.75	1.875	0.3462	0.728	59	55486.3	1500
1.978	1.895	27.18	1.567	0.1697	0.715	60	55487.3	1340
1.898	1.88	25.23	1.626	0.4387	0.725	61	55488.3	1220
1.853	1.894	22.23	1.733	0.8103	0.74	62	55489.3	1080
1.9	1.876	18.9	2.029	0.7195	0.713	63	55490.3	1000
1.948	1.825	17.09	3.076	0.2158	1.147	64	55491.3	1180
2.119	1.902	18.18	3.511	0.6519	1.377	65	55492.3	1860

2.193	1.972	20.37	3.928	0.2749	1.631	66	55493.3	2180
2.226	1.993	23.51	3.811	0.3728	1.646	67	55494.3	2480
2.189	1.905	25.85	3.313	0.5303	1.426	68	55495.3	2500
2.094	1.894	27.37	3.049	0.5015	1.187	69	55496.3	2060
2.122	1.913	28.32	2.803	0.7434	0.967	70	55497.3	1920
2.037	1.95	28.47	2.043	0.8298	0.725	71	55498.3	1540
2.076	1.947	28.42	1.602	0.0767	0.72	72	55499.3	1400
2.022	1.921	28.08	1.682	0.3259	0.725	73	55500.3	1240
1.942	1.916	25.8	1.694	0.677	0.718	74	55501.3	1140
1.857	1.93	22.61	1.711	0.8225	0.742	75	55502.3	1100
1.899	1.924	19.8	1.953	0.6992	0.72	76	55503.3	1000
1.992	1.929	18.18	1.875	0.0647	0.72	77	55504.3	980
2.176	1.934	19.37	4.163	0.3518	1.87	78	55505.3	1860
2.229	1.903	22.61	3.838	0.4995	1.606	79	55506.3	2540
2.067	1.904	25.13	3.374	0.4277	1.416	80	55507.3	2340
2.161	1.936	26.89	3.555	0.47	1.416	81	55508.3	2120
2.123	1.936	28.47	3.342	0.5295	1.34	82	55509.3	2120
2.111	1.96	29.99	3.093	0.7278	1.189	83	55510.3	2100
2.083	1.899	30.56	2.961	0.7307	1.13	84	55511.3	1900
2.093	1.917	31.18	2.93	0.5503	1.099	85	55512.3	1840
2.089	1.904	31.66	2.783	0.6799	1.001	86	55513.3	1880
2.053	1.948	31.8	2.7	0.4692	0.981	87	55514.3	1720
2.021	1.927	31.99	2.656	0.5471	0.957	88	55515.3	1700
2.023	1.974	32.04	2.483	0.3416	0.94	89	55516.3	1600
2.013	1.994	31.89	2.434	0.2407	0.913	90	55517.3	1660
2.021	1.954	31.8	1.584	0.7268	0.752	91	55518.3	1540
2.009	1.899	31.04	1.584	0.3396	0.73	92	55519.3	1340
2.018	1.869	30.61	1.765	0.0688	0.725	93	55520.3	1120
1.966	1.891	29.08	1.694	0.6741	0.713	94	55521.3	1160
1.92	1.904	27.04	1.812	0.2512	0.725	95	55522.3	1140
1.913	1.869	23.99	1.702	0.3823	0.725	96	55523.3	1180
2.034	1.828	23.04	1.814	0.2463	0.735	97	55524.3	1100
2.076	1.812	22.75	1.821	0.6294	0.767	98	55525.3	1120
2.088	1.842	23.42	3.748	0.3706	1.46	99	55526.3	1680
2.121	1.852	25.04	3.828	0.3572	1.589	100	55527.3	2220
2.148	1.818	27.37	3.904	0.3496	1.611	101	55528.3	2300
2.078	1.804	29.47	3.647	0.4893	1.489	102	55529.3	2420
2.141	1.862	30.89	3.347	0.446	1.365	103	55530.3	2260
2.051	1.891	31.89	2.8	0.4866	0.984	104	55531.3	2000
2.088	1.909	32.13	2.588	0.7825	0.938	105	55532.3	1760
2.063	1.93	32.13	2.622	0.6951	0.955	106	55533.3	1740
2.048	1.889	32.23	2.62	0.4065	0.945	107	55534.3	1700
2.056	1.88	32.04	2.666	0.3826	0.967	108	55535.3	1640
2.083	1.881	32.27	2.561	0.3501	0.95	109	55536.3	1700
2.048	1.873	32.08	1.572	0.6187	0.732	110	55537.3	1540
2.028	1.876	31.61	1.626	0.0554	0.725	111	55538.3	1340
2.025	1.921	31.37	1.743	0.0366	0.732	112	55539.3	1120
2.041	1.928	30.89	1.694	0.1355	0.732	113	55540.3	1160
2	1.924	30.61	1.719	0.7341	0.728	114	55541.3	1240
1.979	1.908	30.13	1.602	0.5613	0.723	115	55542.3	1180
2.022	1.897	29.56	1.597	0.1689	0.73	116	55543.3	1220
2.043	1.878	29.18	1.768	0.7119	0.752	117	55544.3	1180
2.047	1.919	29.18	2.705	0.3916	0.967	118	55545.3	1440
2.028	1.906	29.28	2.559	0.3689	0.84	119	55546.3	1520
2.06	1.932	29.08	1.704	0.3057	0.737	120	55547.3	1300
2.032	1.921	28.8	1.736	0.0334	0.732	121	55548.3	1120
2.017	1.902	28.51	1.621	0.0479	0.728	122	55549.3	1180
2.024	1.935	28.32	1.694	0.6958	0.718	123	55550.3	1240
2.03	1.92	27.66	1.792	0.5288	0.737	124	55551.3	1160
2.056	1.935	27.7	2.236	0.0337	0.908	125	55552.3	1340
2.041	1.924	27.94	2.603	0.0325	0.935	126	55553.3	1440
2.054	1.938	27.94	2.756	0.033	1.001	127	55554.3	1540
2.124	1.929	28.23	3.074	0.1799	1.118	128	55555.3	1700
2.051	1.901	28.89	3.005	0.6997	1.113	129	55556.3	1840
2.104	1.889	29.28	2.891	0.6692	1.05	130	55557.3	1800
2.051	1.879	29.28	2.212	0.3069	0.723	131	55558.3	1520
2.037	1.925	29.04	1.56	0.2505	0.737	132	55559.3	1380
2.028	1.88	28.8	1.802	0.032	0.74	133	55560.3	1160
2.052	1.896	28.18	2.163	0.0273	0.806	134	55561.3	1120
1.987	1.918	28.51	2.786	0.0906	1.003	135	55562.3	1440
2.035	1.914	28.75	2.952	0.02	1.028	136	55563.3	1600
2.09	1.966	28.8	2.922	0.1738	1.008	137	55564.3	1660

2.088	1.951	29.04	2.795	0.6384	0.955	138	55565.3	1660
2.056	1.895	29.28	2.434	0.3435	0.869	139	55566.3	1520
2.05	1.923	29.13	1.777	0.0535	0.732	140	55567.3	1560
2.064	1.963	28.85	1.565	0.3228	0.728	141	55568.3	1300
2.103	1.938	28.7	1.685	0.0481	0.725	142	55569.3	1100
2.017	1.951	28.23	1.672	0.0991	0.728	143	55570.3	1120
2.061	1.927	27.85	1.675	0.3845	0.728	144	55571.3	1200
2.038	1.969	27.7	2.007	0.2139	0.84	145	55572.3	1220
2.075	1.935	27.61	2.178	0.0417	0.886	146	55573.3	1240
2.032	1.927	27.66	2.712	0.1028	0.964	147	55574.3	1440
2.039	1.937	27.8	3.066	0.0132	1.089	148	55575.3	1580
2.069	1.913	28.13	2.671	0.2913	0.891	149	55576.3	1640
2.018	1.968	27.94	2.419	0.0439	0.869	150	55577.3	1440
2.032	1.946	27.89	1.658	0.2085	0.737	151	55578.3	1380
2.007	1.901	27.75	1.587	0.0415	0.728	152	55579.3	1280
2.053	1.926	27.18	1.775	0.0405	0.718	153	55580.3	1160
1.974	1.947	25.85	1.702	0.0864	0.708	154	55581.3	1160
1.941	1.919	23.8	1.619	0.7795	0.73	155	55582.3	1200
1.9	1.939	21.13	1.873	0.5979	0.723	156	55583.3	1100
1.994	1.927	19.42	1.914	0.1799	0.718	157	55584.3	1060
2.068	1.927	19.18	2.881	0.4143	0.969	158	55585.3	1060
2.095	1.909	19.66	3.713	0.0339	1.431	159	55586.3	1500
2.145	1.921	21.8	3.784	0.3633	1.533	160	55587.3	2260
2.094	1.893	22.85	3.137	0.3918	0.974	161	55588.3	1860
2.097	1.931	23.66	3.66	0.042	1.345	162	55589.3	1600
2.128	1.913	24.8	3.613	0.0776	1.455	163	55590.3	2000
2.168	1.911	26.89	3.691	0.4626	1.509	164	55591.3	2260
2.147	1.903	28.61	3.665	0.4905	1.499	165	55592.3	2260
2.142	1.927	30.47	3.076	0.6704	1.182	166	55593.3	2240
2.055	1.926	31.18	2.82	0.1997	1.042	167	55594.3	1840
2.065	1.942	31.32	2.676	0.5051	1.003	168	55595.3	1760
2.068	1.932	31.56	2.747	0.3706	1.001	169	55596.3	1740
2.049	1.903	31.94	2.717	0.5537	1.006	170	55597.3	1740
2.067	1.894	31.99	2.698	0.5742	1.011	171	55598.3	1740
2.041	1.922	32.37	2.607	0.5437	1.001	172	55599.3	1740
2.065	1.901	32.75	2.688	0.5146	1.011	173	55600.3	1820
2.06	1.932	32.51	1.724	0.6345	0.74	174	55601.3	1760
2.012	1.927	32.27	1.382	0.5334	0.72	175	55602.3	1600
2.008	1.948	32.18	2.285	0.5205	0.923	176	55603.3	1600
2.087	1.927	32.13	2.273	0.6545	0.935	177	55604.3	1700
2.034	1.935	32.23	2.231	0.2119	0.94	178	55605.3	1640
2.04	1.938	32.37	2.268	0.1436	0.933	179	55606.3	1700
2.041	1.927	32.42	2.134	0.7068	0.884	180	55607.3	1700
2.04	1.955	32.42	1.394	0.6953	0.72	181	55608.3	1540
2.024	1.953	31.94	1.699	0.3032	0.742	182	55609.3	1280
2.011	1.889	31.75	1.672	0.0461	0.728	183	55610.3	1160
2.024	1.937	30.7	1.694	0.6226	0.732	184	55611.3	1200
1.898	1.969	27.32	1.709	0.6582	0.713	185	55612.3	1140
1.797	1.94	22.47	1.79	0.2854	0.72	186	55613.3	1140
1.803	1.94	17.47	1.948	0.6519	0.715	187	55614.3	1020
1.77	1.931	12.28	1.807	0.646	0.73	188	55615.3	1180
1.828	1.948	6.99	2.188	0.7495	0.708	189	55616.3	880
1.853	1.925	3.09	2.268	0.0818	0.718	190	55617.3	900
1.912	1.94	0.04	2.375	0.6746	0.723	191	55618.3	800
2.047	1.934	-0.05	2.397	0.1294	0.723	192	55619.3	760
2.045	1.933	-0.05	2.341	0.4702	0.737	193	55620.3	760
2.038	1.928	-0.05	2.349	0.3171	0.72	194	55621.3	760
2.044	1.928	0	2.363	0.1831	0.728	195	55622.3	760
2.046	1.929	-0.05	2.395	0.677	0.718	196	55623.3	760
2.022	1.924	-0.05	2.454	0.4592	0.723	197	55624.3	760
2.015	1.923	0	2.446	0.2939	0.732	198	55625.3	740
2.065	1.937	0	2.476	0.6187	0.723	199	55626.3	740
2.046	1.918	0	2.363	0.2446	0.723	200	55627.3	780
2.057	1.931	-0.05	2.366	0.3411	0.728	201	55628.3	780
2.035	1.939	-0.05	2.439	0.1636	0.723	202	55629.3	800
2.077	1.917	-0.05	2.378	0.3137	0.723	203	55630.3	760
2.026	1.932	0	2.473	0.134	0.72	204	55631.3	740
2.048	1.933	0	2.373	0.5359	0.723	205	55632.3	800
2.046	1.906	-0.05	2.456	0.427	0.737	206	55633.3	740
1.997	1.937	0.04	2.48	0.603	0.723	207	55634.3	760
2.04	1.927	0	2.366	0.3572	0.723	208	55635.3	780
2.038	1.936	-0.05	2.48	0.199	0.732	209	55636.3	720

2.071	1.936	-0.05	2.395	0.239	0.732	210	55637.3	740
2.084	1.937	-0.05	2.371	0.4236	0.73	211	55638.3	740
2.038	1.932	-0.05	2.434	0.2583	0.723	212	55639.3	780
2.029	1.946	-0.05	2.373	0.4663	0.718	213	55640.3	760
2.043	1.944	0	2.446	0.5576	0.718	214	55641.3	760
2.046	1.93	-0.05	2.373	0.6902	0.723	215	55642.3	720
2.044	1.929	-0.05	2.419	0.322	0.725	216	55643.3	800
2.026	1.926	-0.05	2.41	0.5139	0.752	217	55644.3	780
2.028	1.922	-0.05	2.349	0.4075	0.728	218	55645.3	740
2.106	1.916	-0.05	3.181	0.4492	1.062	219	55646.3	980
2.281	1.918	5.52	3.489	0.084	1.377	220	55647.3	1740
2.238	1.891	10.47	3.623	0.324	1.511	221	55648.3	2240
2.226	1.833	14.8	3.501	0.3127	1.533	222	55649.3	2440
2.221	1.652	17.66	3.621	0.3296	1.631	223	55650.3	2620
2.229	1.575	21.23	4.063	0.3667	1.724	224	55651.3	2420
2.246	1.63	23.85	4.229	0.5061	1.936	225	55652.3	2480
2.182	1.728	27.42	4.353	0.3472	2.124	226	55653.3	2720
2.229	1.701	30.66	4.431	0.5298	2.241	227	55654.3	2860
2.204	1.649	33.8	4.524	0.5227	2.866	228	55655.3	3120
2.285	1.663	36.75	4.624	0.5168	2.891	229	55656.3	3180
2.262	1.848	39.99	4.475	0.5872	2.939	230	55657.3	3340
2.259	1.89	42.8	4.504	0.5251	2.991	231	55658.3	3560
2.146	1.897	45.7	4.617	0.8567	2.983	232	55659.3	3780
2.215	1.854	48.22	4.575	0.8582	2.983	233	55660.3	3920
2.211	1.886	50.65	4.507	0.8547	2.988	234	55661.3	4120
2.193	1.917	52.98	4.165	0.6729	2.046	235	55662.3	3940
2.09	1.924	53.65	3.689	0.3308	1.587	236	55663.3	2920
1.945	1.94	53.27	2.905	0.2002	1.157	237	55664.3	2160
2.124	1.935	52.94	3.191	0.3147	1.157	238	55665.3	1800
2.115	1.884	53.36	3.14	0.4727	1.128	239	55666.3	1760
2.003	1.885	53.08	2.695	0.667	0.984	240	55667.3	1800
2.012	1.93	52.56	2.19	0.6462	0.908	241	55668.3	1800
2.032	1.92	52.32	1.97	0.3362	0.879	242	55669.3	1820
2.019	1.897	51.84	1.719	0.1804	0.876	243	55670.3	1720
2.002	1.866	51.75	1.704	0.4812	0.854	244	55671.3	1700
2.07	1.897	51.27	1.821	0.1665	0.923	245	55672.3	1680
2.029	1.858	51.13	2.29	0.0996	0.964	246	55673.3	1780
2.108	1.828	50.89	2.28	0.3835	0.991	247	55674.3	1720
2.036	1.86	50.94	2.327	0.3909	0.962	248	55675.3	1780
2.062	1.918	50.56	2.273	0.6162	0.994	249	55676.3	1720
2.06	1.93	50.7	2.305	0.6545	0.977	250	55677.3	1780
2.105	1.948	50.32	2.427	0.3479	0.974	251	55678.3	1700
2.11	1.918	50.46	2.49	0.5344	1.011	252	55679.3	1660
2.061	1.881	50.51	3.081	0.0933	1.099	253	55680.3	1680
2.165	1.906	50.79	3.364	0.6323	1.157	254	55681.3	1700
2.078	1.883	50.89	3.438	0.5925	1.226	255	55682.3	1640
2.037	1.906	51.36	3.54	0.5425	1.23	256	55683.3	1680
2.095	1.947	51.6	3.572	0.6416	1.23	257	55684.3	1780
2.125	1.939	52.17	3.557	0.4968	1.245	258	55685.3	1740
2.058	1.877	52.6	3.491	0.5408	1.235	259	55686.3	1720
2.11	1.942	53.22	3.513	0.522	1.235	260	55687.3	1780
1.97	1.924	53.6	3.42	0.4998	1.226	261	55688.3	1720
2.074	1.925	53.75	3.398	0.551	1.221	262	55689.3	1740
2.037	1.876	54.32	3.506	0.5237	1.228	263	55690.3	1820
2.039	1.885	54.46	2.197	0.7529	0.762	264	55691.3	1900
2.11	1.899	54.22	1.113	0.856	0.708	265	55692.3	1820
1.984	1.922	53.84	1.135	0.6638	0.718	266	55693.3	1700
1.98	1.927	53.03	1.15	0.0449	0.742	267	55694.3	1620
1.97	1.91	52.98	1.707	0.2739	0.967	268	55695.3	1660
2.038	1.873	52.75	1.841	0.8169	0.964	269	55696.3	1940
2.101	1.893	52.27	1.077	0.8276	0.718	270	55697.3	1800
2.016	1.885	51.7	1.14	0.3081	0.723	271	55698.3	1620
1.923	1.911	50.84	1.16	0.0537	0.72	272	55699.3	1580
1.959	1.998	48.79	1.218	0.3704	0.742	273	55700.3	1500
1.973	1.969	47.37	1.267	0.1528	0.723	274	55701.3	1520
1.933	1.905	44.99	1.328	0.2632	0.723	275	55702.3	1460
1.979	1.951	43.6	1.313	0.05	0.737	276	55703.3	1420
1.959	1.874	43.22	1.345	0.5093	0.718	277	55704.3	1420
2.034	1.892	42.46	1.35	0.3982	0.718	278	55705.3	1380
2.008	1.868	42.37	2.749	0.4304	1.133	279	55706.3	1440
2.028	1.915	42.22	3.062	0.5991	1.157	280	55707.3	1920
2.092	1.89	42.41	3.027	0.603	0.942	281	55708.3	1500

2.06	1.901	42.37	1.799	0.7383	0.747	282	55709.3	1440
2.048	1.873	42.22	1.35	0.1956	0.747	283	55710.3	1380
2.032	1.922	41.8	2.256	0.0928	0.923	284	55711.3	1400
1.985	1.941	41.51	2.842	0.551	0.977	285	55712.3	1360
2.104	1.928	41.7	2.852	0.7668	0.972	286	55713.3	1380
2.115	1.908	41.8	2.825	0.2173	0.952	287	55714.3	1420
2.061	1.929	41.84	2.905	0.3018	0.964	288	55715.3	1420
2.043	1.917	41.65	3.074	0.3889	0.981	289	55716.3	1360
2.054	1.93	41.8	3.386	0.4988	1.072	290	55717.3	1360
2.038	1.905	41.65	3.452	0.3369	1.05	291	55718.3	1400
2.101	1.894	41.51	3.398	0.5601	1.055	292	55719.3	1400
2.043	1.927	41.46	3.225	0.5432	1.001	293	55720.3	1420
2.015	1.923	41.32	2.856	0.7244	0.833	294	55721.3	1400
2.011	1.869	40.75	1.641	0.8494	0.747	295	55722.3	1360
1.995	1.914	40.32	1.472	0.563	0.732	296	55723.3	1320
2.026	1.912	39.7	1.543	0.0498	0.742	297	55724.3	1320
2.043	1.897	39.08	1.541	0.5198	0.75	298	55725.3	1280
2.052	1.88	38.84	1.45	0.5354	0.747	299	55726.3	1320
2.074	1.925	38.32	1.411	0.7832	0.73	300	55727.3	1380
1.963	1.932	38.42	1.548	0.2246	0.737	301	55728.3	1320
2.054	1.913	38.03	1.765	0.0352	0.82	302	55729.3	1340
2.052	1.938	38.51	1.76	0.7766	0.957	303	55730.3	1860
1.934	1.974	38.7	1.846	0.7275	0.964	304	55731.3	2000
2.066	2.036	39.18	1.758	0.3953	0.967	305	55732.3	1980
2.067	2.029	39.7	1.785	0.3467	0.955	306	55733.3	2000
2.029	1.946	40.03	1.819	0.6694	0.974	307	55734.3	2020
2.088	1.975	40.46	1.912	0.3628	1.03	308	55735.3	2080
2.071	2.026	40.65	2.642	0.3091	1.099	309	55736.3	1920
2.078	2.046	41.7	3.091	0.6042	1.323	310	55737.3	1920
2.08	2.058	43.22	4.487	0.2109	2.061	311	55738.3	2040
2.177	1.989	45.37	4.517	0.3933	2.114	312	55739.3	2100
2.228	2.042	47.41	4.617	0.5327	2.305	313	55740.3	2320
2.174	1.943	50.17	4.597	0.4634	2.344	314	55741.3	2360
2.184	1.841	52.03	4.565	0.3955	2.397	315	55742.3	2420
2.159	1.846	54.03	4.363	0.4307	2.09	316	55743.3	2460
2.152	1.861	55.22	4.109	0.5808	1.816	317	55744.3	2560
2.018	1.883	55.98	4.363	0.3289	1.772	318	55745.3	1860
2.081	1.938	56.94	4.238	0.4348	1.694	319	55746.3	1900
2.124	1.807	57.13	3.967	0.6448	1.47	320	55747.3	1900
2.066	1.831	57.6	3.838	0.5623	1.433	321	55748.3	1880
2.083	1.894	57.79	3.599	0.2617	1.292	322	55749.3	1940
2.001	1.836	57.7	3.123	0.3867	1.167	323	55750.3	1920
2.063	1.856	57.51	2.93	0.3113	1.138	324	55751.3	1980
2.024	1.899	57.46	2.91	0.3311	1.145	325	55752.3	1860
1.941	1.905	57.17	3.125	0.1772	1.196	326	55753.3	1940
2.054	1.926	57.13	3.228	0.3191	1.201	327	55754.3	1980
2.059	1.942	57.32	3.242	0.2422	1.204	328	55755.3	1880
1.978	1.904	57.36	3.02	0.5029	1.143	329	55756.3	1880
2.082	1.933	57.03	1.992	0.6968	0.962	330	55757.3	1880
2.028	1.958	56.51	2.109	0.2075	0.991	331	55758.3	1860
1.992	1.922	56.6	2.178	0.2471	1.018	332	55759.3	1920
2.047	1.886	56.74	2.839	0.1804	1.108	333	55760.3	1940
2.029	1.922	57.03	3.035	0.6455	1.167	334	55761.3	1880
1.952	1.926	57.51	3.667	0.2441	1.345	335	55762.3	1940
2.007	1.936	58.13	3.669	0.3796	1.348	336	55763.3	1920
2.15	1.913	58.84	3.335	0.4451	1.24	337	55764.3	1920
1.965	1.946	59.46	2.864	0.6008	1.162	338	55765.3	1980
1.955	1.944	59.55	2.827	0.5718	1.108	339	55766.3	2060
2.111	1.944	59.55	1.729	0.6255	0.957	340	55767.3	1960
1.989	1.937	59.74	1.521	0.0811	0.908	341	55768.3	2020
2.041	1.853	59.51	1.589	0.387	0.894	342	55769.3	2040
2.112	1.916	59.36	1.55	0.6589	0.908	343	55770.3	2060
2.011	1.927	59.46	1.558	0.5313	0.908	344	55771.3	1980
1.962	1.939	59.17	1.47	0.5305	0.906	345	55772.3	2060
2.007	1.949	59.27	1.272	0.52	0.774	346	55773.3	2060
1.945	1.927	58.79	0.845	0.832	0.742	347	55774.3	2020
2.071	1.976	58.27	0.864	0.343	0.737	348	55775.3	1900
1.955	1.903	57.55	0.835	0.0662	0.73	349	55776.3	1840
2.063	1.951	57.13	0.859	0.3721	0.735	350	55777.3	1880
1.999	1.878	56.84	0.864	0.4875	0.735	351	55778.3	1820
1.928	1.868	56.03	0.923	0.6013	0.742	352	55779.3	1840
2.044	1.875	55.7	0.933	0.0901	0.735	353	55780.3	1800

2.009	1.841	55.17	0.964	0.3347	0.745	354	55781.3	1760
1.998	1.868	54.46	1.067	0.7183	0.779	355	55782.3	1800
1.978	1.924	54.41	1.418	0.6409	0.874	356	55783.3	1820
1.969	1.913	54.17	1.55	0.1965	0.884	357	55784.3	1880
2.023	1.849	53.89	1.724	0.7168	0.928	358	55785.3	1840
2.04	1.87	53.65	1.917	0.7512	0.938	359	55786.3	1780
2.117	1.878	53.55	1.841	0.7502	0.93	360	55787.3	1800
2.105	1.947	53.17	1.958	0.4392	0.942	361	55788.3	1780
1.961	1.876	52.79	1.978	0.4263	0.942	362	55789.3	1820
2.062	1.916	52.41	1.987	0.3936	0.918	363	55790.3	1720
1.968	1.854	52.03	2.104	0.2285	0.928	364	55791.3	1760
2.031	1.895	52.08	2.803	0.3364	1.089	365	55792.3	1820
2.026	1.934	52.36	3.201	0.6362	1.143	366	55793.3	1740
2.012	1.89	52.51	3.225	0.5981	1.16	367	55794.3	1720
2.147	1.885	52.46	3.242	0.5117	1.152	368	55795.3	1800
2.041	1.94	52.65	3.269	0.4722	1.138	369	55796.3	1740
2.061	1.932	52.65	3.157	0.5266	1.135	370	55797.3	1760
2.138	1.92	52.75	3.21	0.5056	1.135	371	55798.3	1820
2.104	1.864	52.89	3.154	0.4802	1.172	372	55799.3	1740
2.145	1.887	53.22	3.154	0.4963	1.145	373	55800.3	1760
2.085	1.877	53.22	3.108	0.5159	1.138	374	55801.3	1760
2.02	1.882	52.98	3.149	0.511	1.145	375	55802.3	1800
2.029	1.945	53.08	3.074	0.5203	1.128	376	55803.3	1800
2.096	1.908	53.65	2.776	0.7339	1.035	377	55804.3	1880
2.113	1.903	53.51	2.092	0.5569	0.955	378	55805.3	1780
2.077	1.953	53.75	2.073	0.1558	0.952	379	55806.3	1800
2.07	1.924	53.65	2.007	0.2778	0.92	380	55807.3	1820
2.078	1.853	53.6	1.96	0.3748	0.935	381	55808.3	1840
2.015	1.883	53.65	1.904	0.4973	0.942	382	55809.3	1780
2.036	1.918	53.89	1.851	0.1313	0.933	383	55810.3	1800
2.085	1.882	53.84	1.882	0.5486	0.942	384	55811.3	1820
1.961	1.964	53.7	1.995	0.7202	0.938	385	55812.3	1800
2.028	1.899	53.51	2.244	0.4495	1.069	386	55813.3	1800
2.094	1.923	53.46	3.32	0.3008	1.216	387	55814.3	1780
2.048	1.907	53.75	3.535	0.3618	1.284	388	55815.3	1860
2.081	1.9	54.32	3.884	0.3237	1.416	389	55816.3	1840
2.067	1.833	55.03	3.872	0.532	1.46	390	55817.3	1940
2.094	1.906	55.41	3.73	0.5562	1.323	391	55818.3	1860
2.018	1.855	55.74	3.616	0.6084	1.299	392	55819.3	1840
2.07	1.887	56.27	3.066	0.7024	1.104	393	55820.3	1880
2.083	1.911	55.98	2.5	0.7112	1.072	394	55821.3	1900
2.089	1.888	55.98	2.427	0.3145	1.052	395	55822.3	1880
2.04	1.841	56.17	2.244	0.3389	0.981	396	55823.3	1860
2.08	1.914	55.79	2.261	0.2314	1.006	397	55824.3	1900
2.039	1.871	55.6	2.478	0.1914	1.079	398	55825.3	1920
2.068	1.896	55.89	2.954	0.5398	1.128	399	55826.3	1860
2.008	1.866	55.79	2.93	0.6528	1.121	400	55827.3	1860
2.031	1.905	56.32	2.913	0.5095	1.16	401	55828.3	1920
2.022	1.918	56.22	2.937	0.5586	1.125	402	55829.3	1880
2.046	1.919	56.6	2.866	0.5127	1.128	403	55830.3	1900
2.092	1.911	56.84	2.92	0.5574	1.128	404	55831.3	1900
2.074	1.908	57.27	2.756	0.5435	1.13	405	55832.3	1880
2.021	1.889	57.36	2.791	0.4492	1.128	406	55833.3	1960
2.026	1.878	57.93	2.82	0.239	1.13	407	55834.3	1860
2.045	1.885	57.84	2.732	0.5818	1.094	408	55835.3	1960
2.081	1.891	58.32	2.783	0.585	1.113	409	55836.3	1960
2.135	1.871	58.74	2.744	0.3413	1.113	410	55837.3	1940
2.056	1.811	58.89	2.729	0.2627	1.15	411	55838.3	1920
2.071	1.764	59.03	2.993	0.3606	1.201	412	55839.3	2020
2.01	1.862	59.51	3.013	0.3804	1.189	413	55840.3	1940
2.049	1.815	59.79	2.947	0.498	1.201	414	55841.3	1960
1.97	1.858	60.03	2.974	0.5679	1.189	415	55842.3	2000
2.144	1.855	60.32	2.93	0.5212	1.211	416	55843.3	2100
2.13	1.85	60.32	2.905	0.6606	1.196	417	55844.3	2000
2.03	1.867	60.74	2.954	0.5081	1.189	418	55845.3	2100
2.056	1.86	61.08	3.015	0.5171	1.177	419	55846.3	2020
2.105	1.832	61.27	2.69	0.624	1.108	420	55847.3	2060
2.043	1.903	60.84	1.201	0.8232	0.742	421	55848.3	2060
2.007	1.852	60.17	1.072	0.8269	0.847	422	55849.3	2040
2.021	1.862	59.79	1.882	0.3726	1.05	423	55850.3	2100
2.112	1.872	60.12	2.864	0.4211	1.199	424	55851.3	2100
2.057	1.802	60.17	3.013	0.6545	1.206	425	55852.3	1980

2.071	1.795	60.36	3.044	0.311	1.23	426	55853.3	2000
1.972	1.849	60.6	3.032	0.4216	1.238	427	55854.3	2060
2.013	1.883	60.65	1.98	0.6582	0.933	428	55855.3	2060
1.989	1.806	60.08	1.504	0.374	0.918	429	55856.3	2020
1.899	1.879	59.46	1.538	0.375	0.942	430	55857.3	2040
2.088	1.851	59.08	2.048	0.2502	1.062	431	55858.3	1960
2.069	1.846	59.36	2.852	0.3411	1.162	432	55859.3	2060
2.047	1.854	59.22	2.82	0.6284	1.128	433	55860.3	1960
1.949	1.803	59.27	2.488	0.6106	1.079	434	55861.3	1960
2.19	1.866	59.22	1.79	0.5608	0.925	435	55862.3	1980
2.036	1.882	58.65	1.353	0.3369	0.859	436	55863.3	2040
2.036	1.864	58.51	1.711	0.1885	0.952	437	55864.3	1980
1.992	1.853	58.03	2.742	0.2312	1.16	438	55865.3	1940
2.078	1.86	58.36	3.352	0.2302	1.284	439	55866.3	1960
2.197	1.828	58.22	3.638	0.4309	1.362	440	55867.3	1940
2.02	1.839	58.32	3.643	0.4678	1.353	441	55868.3	1920
2.092	1.946	58.22	3.647	0.4841	1.367	442	55869.3	1940
2.037	1.898	58.03	3.716	0.5889	1.355	443	55870.3	1960
2.03	1.917	58.03	3.625	0.4829	1.353	444	55871.3	2000
2.05	1.876	58.08	3.594	0.6045	1.323	445	55872.3	2080
2.18	1.922	58.27	3.555	0.5632	1.321	446	55873.3	1920
2.05	1.902	58.27	3.452	0.5659	1.328	447	55874.3	2000
2.031	1.92	58.36	3.008	0.6956	1.094	448	55875.3	2000
2.163	1.914	58.32	2.266	0.6714	0.991	449	55876.3	1980
2.047	1.882	58.17	3.127	0.0315	1.23	450	55877.3	2000
2.008	1.92	58.55	3.389	0.5339	1.265	451	55878.3	1940
2.054	1.886	59.03	3.306	0.5051	1.277	452	55879.3	1960
1.983	1.923	59.17	2.93	0.6748	1.138	453	55880.3	2000
2.076	1.89	59.27	2.698	0.5752	1.135	454	55881.3	2000
2.046	1.905	59.51	2.705	0.4067	1.133	455	55882.3	1980
2.093	1.928	59.41	2.749	0.4609	1.099	456	55883.3	1940
2.048	1.905	59.55	2.791	0.4243	1.147	457	55884.3	2060
2.047	1.885	59.74	2.759	0.4773	1.128	458	55885.3	1980
2.105	1.912	59.65	2.71	0.4465	1.138	459	55886.3	2020
1.987	1.933	59.55	2.732	0.3398	1.133	460	55887.3	2060
2.123	1.837	59.22	2.871	0.2078	1.152	461	55888.3	2020
1.962	1.89	59.08	3.059	0.3491	1.196	462	55889.3	2000
2.112	1.9	58.7	3.091	0.5864	1.218	463	55890.3	1940
2.101	1.938	58.41	2.827	0.6833	1.133	464	55891.3	1940
2.012	1.985	57.89	2.849	0.5042	1.13	465	55892.3	1960
2.073	1.956	57.79	2.952	0.3203	1.172	466	55893.3	1940
2.055	1.95	58.03	3.118	0.3796	1.199	467	55894.3	2000
2.094	1.99	58.27	3.181	0.3511	1.187	468	55895.3	1960
2.063	1.94	58.32	3.579	0.2141	1.333	469	55896.3	1940
2.17	1.961	59.17	4.06	0.1873	1.592	470	55897.3	1980
2.099	1.938	59.84	3.818	0.543	1.45	471	55898.3	2000
2.104	1.989	60.65	3.794	0.6069	1.455	472	55899.3	2000
2.025	2.016	61.41	3.755	0.5698	1.421	473	55900.3	2020
2.162	1.948	62.36	3.364	0.6863	1.338	474	55901.3	2040
1.993	1.958	62.89	2.898	0.6069	1.189	475	55902.3	2060
2.147	1.958	63.36	2.168	0.5608	1.038	476	55903.3	2100
1.951	1.933	63.6	0.986	0.7864	0.728	477	55904.3	2160
1.842	1.868	63.55	0.742	0.8579	0.728	478	55905.3	2040
1.962	1.942	63.5	0.774	0.1897	0.732	479	55906.3	1960
1.958	1.934	63.27	0.728	0.0522	0.752	480	55907.3	1980
2.056	1.906	62.89	0.754	0.3291	0.747	481	55908.3	2060
2.074	1.883	62.31	0.725	0.6001	0.728	482	55909.3	1980
2.014	1.887	61.55	0.789	0.5459	0.73	483	55910.3	1980
2.034	1.949	61.08	0.886	0.1565	0.779	484	55911.3	1960
2.012	1.874	60.93	0.969	0.563	0.798	485	55912.3	2140
1.996	1.87	60.79	1.411	0.3184	0.928	486	55913.3	2020
2.006	1.834	60.22	2.129	0.3269	1.05	487	55914.3	2020
2.061	1.797	60.46	2.327	0.7212	1.099	488	55915.3	1980
2.153	1.824	60.27	2.39	0.3274	1.091	489	55916.3	2040
2.101	1.823	60.22	2.373	0.4619	1.101	490	55917.3	1980
2.039	1.848	60.17	2.358	0.4358	1.101	491	55918.3	2020
2.062	1.853	60.36	2.361	0.5718	1.111	492	55919.3	2040
2.077	1.818	60.32	2.759	0.3186	1.187	493	55920.3	2080
2.073	1.815	60.7	3.232	0.3843	1.274	494	55921.3	2000
1.956	1.765	60.89	3.433	0.3357	1.311	495	55922.3	2000
2.183	1.756	60.98	3.445	0.5435	1.313	496	55923.3	2020
2.066	1.868	60.98	3.401	0.4836	1.316	497	55924.3	2140

2.085	1.851	60.84	3.457	0.5811	1.309	498	55925.3	2080
2.069	1.925	60.89	3.391	0.5762	1.323	499	55926.3	2140
2.086	1.938	60.55	3.491	0.4758	1.323	500	55927.3	2100
2.055	1.89	60.12	3.486	0.5476	1.301	501	55928.3	2060
2.029	1.907	59.98	2.654	0.5872	1.072	502	55929.3	2020
2.032	1.909	59.17	2.378	0.6558	1.06	503	55930.3	2020
2.065	1.99	58.32	2.397	0.5125	1.074	504	55931.3	2040
2.02	1.986	57.89	3.22	0.2393	1.226	505	55932.3	1920
2.126	1.932	57.51	3.325	0.4363	1.252	506	55933.3	1960
2.036	1.963	57.46	3.215	0.4983	1.257	507	55934.3	1940
2.101	1.967	57.79	3.198	0.6741	1.206	508	55935.3	1920
2.032	1.977	57.55	3.306	0.4265	1.228	509	55936.3	1940
2.033	2.015	57.65	3.274	0.4241	1.24	510	55937.3	1940
2.088	1.987	57.55	3.262	0.4929	1.243	511	55938.3	1880
2.13	1.966	57.79	3.267	0.4873	1.228	512	55939.3	1960
2.029	1.91	58.32	3.164	0.5208	1.218	513	55940.3	1940
2.06	1.922	58.27	3.086	0.5361	1.172	514	55941.3	1940
1.985	1.967	58.65	2.759	0.7095	1.101	515	55942.3	1980
2.051	1.949	58.22	1.411	0.7168	0.847	516	55943.3	1980
2.031	1.918	57.7	1.34	0.271	0.84	517	55944.3	1920
1.951	1.884	57.79	1.318	0.0549	0.845	518	55945.3	1900
2.019	1.903	57.74	1.782	0.0461	0.967	519	55946.3	2000
2.075	1.909	57.89	1.992	0.7947	0.981	520	55947.3	1940
2.087	1.868	57.79	2.036	0.7388	1.033	521	55948.3	2040
1.988	1.817	57.84	1.982	0.5996	1.003	522	55949.3	1880
2.107	1.84	57.84	2.017	0.6899	1.016	523	55950.3	2000
2.073	1.879	58.36	1.985	0.553	0.984	524	55951.3	1980
1.97	1.95	58.41	1.616	0.6318	0.925	525	55952.3	1900
2.086	1.919	58.22	1.289	0.6899	0.811	526	55953.3	1920
2.029	1.937	58.03	0.852	0.7959	0.762	527	55954.3	1920
2.001	1.919	57.98	0.864	0.1616	0.767	528	55955.3	1920
2.098	1.897	57.51	0.879	0.2686	0.762	529	55956.3	1920
2.021	1.913	57.22	0.828	0.281	0.757	530	55957.3	1940
2.008	1.896	57.36	0.867	0.1504	0.75	531	55958.3	1900
1.964	1.894	56.79	0.916	0.4082	0.769	532	55959.3	1940
1.98	1.893	56.46	0.94	0.762	0.745	533	55960.3	1840
2.008	1.951	56.36	0.986	0.5166	0.747	534	55961.3	1880
1.99	1.927	55.94	0.925	0.6211	0.747	535	55962.3	1840
2.08	1.901	55.6	1.062	0.207	0.74	536	55963.3	1760
2.059	1.914	55.13	1.003	0.5046	0.759	537	55964.3	1800
2.036	1.826	54.41	0.972	0.4775	0.73	538	55965.3	1840
2.013	1.862	53.6	0.952	0.6826	0.72	539	55966.3	1700
1.973	1.903	52.94	0.979	0.2712	0.723	540	55967.3	1740
1.994	1.902	52.03	1.118	0.5691	0.723	541	55968.3	1680
1.991	1.862	50.89	1.094	0.7048	0.725	542	55969.3	1640
1.999	1.872	49.84	1.14	0.1841	0.718	543	55970.3	1580
2.01	1.889	48.41	1.201	0.5693	0.73	544	55971.3	1560
1.905	1.935	46.79	1.208	0.2063	0.723	545	55972.3	1500
1.948	1.926	45.46	1.277	0.1892	0.698	546	55973.3	1460
1.919	1.957	43.65	1.213	0.4929	0.737	547	55974.3	1420
1.877	1.98	41.61	1.379	0.2107	0.72	548	55975.3	1400
1.908	1.919	39.42	1.394	0.269	0.728	549	55976.3	1320
1.771	1.963	36.13	1.46	0.2488	0.71	550	55977.3	1220
1.806	1.935	32.61	1.475	0.7883	0.742	551	55978.3	1320
1.827	1.903	28.47	1.482	0.4294	0.715	552	55979.3	1200
1.757	1.938	23.99	1.609	0.1975	0.703	553	55980.3	1200
1.803	1.854	19.33	1.87	0.0813	0.723	554	55981.3	1040
1.737	1.858	13.56	1.611	0.1213	0.71	555	55982.3	1140
1.853	1.86	8.57	2.124	0.5613	0.728	556	55983.3	980
1.871	1.876	5.04	2.034	0.7498	0.72	557	55984.3	940
1.975	1.907	3.47	2.378	0.7898	0.894	558	55985.3	920
2.185	1.876	5.47	3.416	0.3606	1.257	559	55986.3	1460
2.31	1.821	9.99	4.038	0.2676	1.831	560	55987.3	2120
2.348	1.733	15.95	4.253	0.3103	2.039	561	55988.3	2920
2.313	1.68	20.8	4.143	0.5627	2.104	562	55989.3	3140
2.253	1.787	25.32	4.211	0.4856	2.117	563	55990.3	3600
2.249	1.93	28.7	4.343	0.3262	2.063	564	55991.3	2840
2.188	1.943	31.7	3.867	0.5872	1.726	565	55992.3	2900
2.104	1.977	33.7	3.923	0.2034	1.653	566	55993.3	2560
2.154	1.985	35.27	3.689	0.4807	1.489	567	55994.3	2380
2.133	2.007	36.56	3.582	0.3562	1.475	568	55995.3	2360
2.102	1.989	37.56	3.367	0.481	1.382	569	55996.3	2380

2.057	2.018	38.27	2.935	0.4026	1.199	570	55997.3	2280
2.077	2.004	39.08	2.834	0.4014	1.216	571	55998.3	2200
2.084	1.989	39.42	2.888	0.4585	1.216	572	55999.3	2220
2.096	1.917	39.8	2.859	0.4502	1.216	573	56000.3	2240
2.078	1.895	40.27	2.986	0.4358	1.13	574	56001.3	2120
2.072	1.894	41.03	2.102	0.7761	0.959	575	56002.3	1940
2.086	1.929	40.7	1.714	0.3904	0.95	576	56003.3	1960
2.023	1.934	40.61	1.843	0.1245	0.952	577	56004.3	1920
1.983	1.9	40.51	1.772	0.6064	0.955	578	56005.3	1920
2.063	1.941	40.22	1.746	0.6489	0.959	579	56006.3	1880
2.063	1.926	40.32	1.855	0.5488	0.947	580	56007.3	1940
2.033	1.902	39.7	1.067	0.76	0.713	581	56008.3	1900
1.902	1.848	37.27	1.206	0.6497	0.73	582	56009.3	1700
1.842	1.892	33.51	1.743	0.0183	0.732	583	56010.3	1260
1.876	1.903	29.7	1.719	0.0251	0.728	584	56011.3	1160
1.906	1.933	26.66	1.675	0.0481	0.723	585	56012.3	1180
1.883	1.961	23.51	1.709	0.5386	0.728	586	56013.3	1140
1.885	1.919	19.99	1.819	0.7507	0.715	587	56014.3	1040
1.892	1.933	16.52	1.665	0.7322	0.718	588	56015.3	1040
1.862	1.947	12.71	1.865	0.3438	0.725	589	56016.3	1100
1.852	1.943	8.66	2.156	0.8059	0.737	590	56017.3	880
1.866	1.914	4.61	2.163	0.5518	0.72	591	56018.3	960
1.939	1.923	2.14	2.319	0.7646	0.72	592	56019.3	880
1.93	1.944	0	2.4	0.5881	0.725	593	56020.3	780
2.071	1.918	-0.05	2.361	0.0522	0.732	594	56021.3	780
2.033	1.921	-0.05	2.39	0.3552	0.723	595	56022.3	720
2.239	1.901	3.33	4.004	0.2593	1.597	596	56023.3	1420
2.434	1.888	11.04	4.443	0.3276	2.212	597	56024.3	2420
2.348	1.858	17.99	4.39	0.5291	2.324	598	56025.3	2920
2.287	1.899	23.47	4.048	0.5642	2.095	599	56026.3	3380
2.257	1.93	27.89	4.314	0.5005	2.021	600	56027.3	3180
2.244	1.917	30.99	3.992	0.4116	1.753	601	56028.3	2760
2.134	1.914	33.37	3.826	0.3435	1.633	602	56029.3	2680
2.151	1.921	35.18	3.921	0.606	1.619	603	56030.3	2460
2.159	1.904	36.89	3.528	0.4893	1.482	604	56031.3	2400
2.13	1.886	38.46	3.572	0.4792	1.404	605	56032.3	2300
2.081	1.852	39.89	3.76	0.3694	1.401	606	56033.3	1900
2.099	1.801	40.7	3.101	0.6541	1.04	607	56034.3	1880
2.059	1.763	41.03	2.104	0.6724	0.842	608	56035.3	1940
2.015	1.828	40.65	1.304	0.8096	0.762	609	56036.3	1960
2.034	1.923	40.18	1.494	0.5979	0.93	610	56037.3	1900
2.042	1.878	39.84	1.121	0.8491	0.769	611	56038.3	2040
2.046	1.901	39.32	1.133	0.8306	0.769	612	56039.3	1820
2.03	1.91	38.84	1.348	0.1409	0.779	613	56040.3	1580
2.031	1.923	38.46	1.333	0.0996	0.762	614	56041.3	1500
2.005	1.921	37.84	1.372	0.491	0.769	615	56042.3	1580
1.998	1.913	37.7	1.858	0.4399	0.991	616	56043.3	1760
2.08	1.904	37.99	2.114	0.7378	1.006	617	56044.3	1920
2.054	1.905	38.03	2.058	0.6194	0.969	618	56045.3	1860
2.005	1.916	38.03	1.885	0.6067	0.93	619	56046.3	1860
2.041	1.9	38.03	1.809	0.2246	0.903	620	56047.3	1840
2.018	1.89	38.23	2.263	0.2253	1.05	621	56048.3	1840
2.049	1.904	38.8	2.639	0.6079	1.06	622	56049.3	1780
2.101	1.92	39.18	2.444	0.6182	1.05	623	56050.3	1840
2.058	1.902	39.75	2.368	0.6306	1.038	624	56051.3	1960
2.1	1.891	39.99	2.449	0.3301	1.042	625	56052.3	1900
2.058	1.857	40.22	2.358	0.6057	1.06	626	56053.3	1920
2.11	1.846	40.75	2.415	0.4331	1.05	627	56054.3	1900
1.996	1.963	41.03	2.319	0.5371	1.064	628	56055.3	1880
2.069	1.978	41.56	1.938	0.6191	0.947	629	56056.3	2000
2.043	1.983	41.42	1.216	0.731	0.84	630	56057.3	1980
2.049	1.902	41.08	1.26	0.5276	0.835	631	56058.3	2020
2.032	1.913	40.94	1.357	0.1372	0.867	632	56059.3	1920
1.996	1.908	40.22	1.606	0.0977	0.933	633	56060.3	1900
2.103	1.908	40.37	1.863	0.5256	1.006	634	56061.3	1980
2.036	1.9	40.51	2.676	0.283	1.145	635	56062.3	1980
2.01	1.946	40.94	2.827	0.7253	1.14	636	56063.3	1920
2.054	1.931	41.51	2.856	0.5244	1.118	637	56064.3	2000
2.107	1.913	42.13	2.778	0.5496	1.147	638	56065.3	1960
2.09	1.918	42.65	2.747	0.551	1.138	639	56066.3	1980
2.04	1.955	42.7	1.655	0.7649	0.945	640	56067.3	2040
2.092	1.945	42.41	1.631	0.0791	0.945	641	56068.3	2000

2.006	1.975	42.46	1.567	0.4734	0.952	642	56069.3	1960
2.027	1.91	42.18	1.76	0.6604	0.94	643	56070.3	2100
2.044	1.908	42.13	1.641	0.5457	0.947	644	56071.3	1960
2.061	1.936	42.41	2.471	0.2336	1.138	645	56072.3	2000
2.048	1.954	42.75	2.51	0.6548	1.13	646	56073.3	2080
2.034	1.913	43.22	2.524	0.6213	1.14	647	56074.3	2060
2.078	1.909	43.89	2.534	0.519	1.138	648	56075.3	2040
2.113	1.9	44.13	2.273	0.5642	1.035	649	56076.3	2060
2.042	1.937	44.27	3.071	0.3811	1.021	650	56077.3	1500
2.057	1.93	44.51	1.702	0.7725	0.72	651	56078.3	1480
2.013	1.93	43.8	1.333	0.7441	0.742	652	56079.3	1520
2.017	1.919	43.41	1.355	0.0332	0.737	653	56080.3	1400
2.071	1.912	42.7	1.504	0.0388	0.774	654	56081.3	1400
2.026	1.933	42.41	1.685	0.4263	0.818	655	56082.3	1540
2.012	1.954	42.7	2.087	0.6528	0.894	656	56083.3	1480
2.004	1.986	42.56	2.141	0.7129	0.881	657	56084.3	1440
1.963	2.09	42.22	1.873	0.7451	0.823	658	56085.3	1380
2	2.103	42.08	1.938	0.2837	0.84	659	56086.3	1400
2.034	2.108	41.75	1.912	0.353	0.85	660	56087.3	1420
1.981	2.087	41.42	1.882	0.5513	0.835	661	56088.3	1420
2.02	2.08	41.32	2.065	0.6199	0.886	662	56089.3	1340
2.07	2.006	41.46	3.179	0.1072	1.035	663	56090.3	1340
2.05	1.927	41.7	3.218	0.7781	1.033	664	56091.3	1420
2.055	1.917	41.89	3.223	0.2856	1.035	665	56092.3	1420
2.027	1.928	42.03	2.783	0.4856	0.913	666	56093.3	1380
1.999	1.909	41.61	1.719	0.7832	0.767	667	56094.3	1460
1.987	1.873	41.03	1.489	0.3586	0.769	668	56095.3	1380
2.046	1.798	40.56	1.531	0.2197	0.786	669	56096.3	1340
2.043	1.827	40.22	1.387	0.5024	0.752	670	56097.3	1340
1.999	1.872	39.8	1.492	0.0747	0.732	671	56098.3	1280
1.989	1.921	39.23	1.609	0.4995	0.767	672	56099.3	1300
2.026	1.907	38.94	1.426	0.5447	0.767	673	56100.3	1480
2.024	1.899	38.51	1.196	0.821	0.779	674	56101.3	1760
2.031	1.913	37.94	1.121	0.854	0.769	675	56102.3	1840
2.029	1.891	37.61	1.06	0.7324	0.745	676	56103.3	1700
2.019	1.918	37.32	1.697	0.03	0.752	677	56104.3	1260
2.014	1.937	37.08	1.548	0.0413	0.728	678	56105.3	1160
2.048	1.89	36.51	1.924	0.4231	0.986	679	56106.3	1520
2.066	1.901	36.65	1.904	0.7905	0.957	680	56107.3	1860
2.04	1.951	36.75	1.899	0.5313	0.952	681	56108.3	1880
2.041	1.925	36.84	1.88	0.335	0.918	682	56109.3	1860
2.023	1.888	36.46	1.479	0.3955	0.776	683	56110.3	1820
1.997	1.952	35.99	1.165	0.6902	0.73	684	56111.3	1680
1.997	1.936	35.75	1.484	0.272	0.73	685	56112.3	1300
2.028	1.991	35.23	1.726	0.0349	0.747	686	56113.3	1100
2.039	2.058	35.04	2.109	0.4082	0.947	687	56114.3	1500
2.032	2.001	34.85	1.995	0.8345	0.952	688	56115.3	1840
2.042	2.001	35.23	2.073	0.2993	0.957	689	56116.3	1840
2.045	1.991	35.42	2.048	0.2449	0.962	690	56117.3	1820
2.025	2.027	35.46	2.036	0.4409	0.977	691	56118.3	1840
2.034	2.015	35.32	1.919	0.4382	0.933	692	56119.3	1840
1.976	2.04	35.61	3.577	0.522	1.387	693	56120.3	1900
2.12	2.022	36.8	3.34	0.2954	1.396	694	56121.3	2340
2.078	2.028	37.89	3.025	0.5483	1.245	695	56122.3	2320
2.036	2.047	38.84	2.49	0.5559	1.118	696	56123.3	2120
2.065	2.07	39.13	2.158	0.5063	0.989	697	56124.3	1980
2.015	2.054	39.51	1.997	0.6692	0.974	698	56125.3	1840
1.983	2.059	39.46	1.03	0.7517	0.771	699	56126.3	1880
1.984	2.08	38.94	1.433	0.4097	0.847	700	56127.3	1720
1.996	2.09	39.23	1.902	0.3523	1.04	701	56128.3	1900
2.067	1.965	39.46	2.356	0.6648	1.082	702	56129.3	2040
2.037	1.865	40.32	2.329	0.481	1.03	703	56130.3	1860
2.028	1.872	40.56	2.048	0.6887	0.986	704	56131.3	1880
2.02	1.887	40.61	1.494	0.4136	0.918	705	56132.3	1900
2.045	1.864	40.84	1.47	0.1636	0.886	706	56133.3	1900
2.007	1.769	40.42	1.565	0.3618	0.889	707	56134.3	1980
2.079	1.766	40.32	1.65	0.2627	0.925	708	56135.3	1880
2.094	1.742	39.75	1.948	0.3247	0.989	709	56136.3	1920
2.079	1.768	40.27	2.468	0.4265	1.06	710	56137.3	2020
2.047	1.764	40.42	2.529	0.6697	1.055	711	56138.3	1920
2.054	1.74	40.61	2.41	0.4832	1.06	712	56139.3	1920
2.039	1.769	40.89	2.458	0.5078	1.064	713	56140.3	1880

2.089	1.771	40.8	2.39	0.3909	1.06	714	56141.3	2020
2.017	1.85	41.27	2.351	0.3994	1.062	715	56142.3	2000
2.073	1.894	41.13	2.351	0.5552	1.074	716	56143.3	2000
2.029	1.911	41.42	1.465	0.7651	0.811	717	56144.3	2040
2.04	1.891	40.61	1.152	0.7949	0.796	718	56145.3	1920
2.063	1.933	40.46	1.099	0.3142	0.806	719	56146.3	1880
2.044	1.936	39.94	1.055	0.1687	0.889	720	56147.3	1900
2.026	1.903	39.37	1.113	0.3433	0.806	721	56148.3	2480
1.962	1.913	38.89	1.272	0.4199	0.808	722	56149.3	1860
2.038	1.918	38.23	1.157	0.3245	0.813	723	56150.3	1820
2.002	1.918	37.99	1.221	0.6245	0.806	724	56151.3	1800
2.018	1.924	37.42	1.25	0.5396	0.796	725	56152.3	1760
2.04	1.916	37.13	1.23	0.4058	0.796	726	56153.3	1740
2.019	1.906	37.08	1.375	0.2932	0.808	727	56154.3	1820
2.056	1.923	36.7	1.06	0.5793	0.723	728	56155.3	1700
2.009	1.936	36.04	1.367	0.4753	0.72	729	56156.3	1420
1.936	1.938	33.46	1.665	0.0122	0.73	730	56157.3	1160
1.935	1.941	30.42	1.694	0.0225	0.725	731	56158.3	1080
1.79	1.937	25.61	1.555	0.033	0.718	732	56159.3	1120
1.721	1.945	19.9	1.785	0.437	0.718	733	56160.3	1120
1.708	1.947	13.14	1.541	0.824	0.715	734	56161.3	1080
1.719	1.972	6.38	2.209	0.8047	0.728	735	56162.3	960
2.005	1.919	4	2.834	0.2947	0.969	736	56163.3	960
2.353	1.92	8.95	4.504	0.1936	2.253	737	56164.3	2260
2.396	1.87	17.52	4.788	0.6208	3.179	738	56165.3	3060
2.416	1.911	24.09	4.272	0.6899	2.3	739	56166.3	3680
2.267	1.927	28.99	4.302	0.5142	2.207	740	56167.3	3640
2.174	1.929	32.42	3.923	0.4844	1.831	741	56168.3	3080
2.106	1.937	34.65	3.518	0.1919	1.465	742	56169.3	2620
2.057	1.923	35.99	3.193	0.3806	1.304	743	56170.3	2360
2.111	1.912	36.7	2.62	0.291	1.035	744	56171.3	2260
2.048	1.934	37.04	2.139	0.7009	1.016	745	56172.3	2040
2.01	1.916	37.51	2.917	0.1099	1.133	746	56173.3	1760
2.148	1.912	38.23	3.179	0.4045	1.143	747	56174.3	1820
2.069	1.885	38.84	3.04	0.627	1.14	748	56175.3	1900
2.075	1.929	39.37	3.003	0.4912	1.145	749	56176.3	1860
2.107	1.907	40.08	2.971	0.5254	1.128	750	56177.3	1920
2.046	1.907	40.32	2.588	0.6597	1.079	751	56178.3	1920
2.051	1.926	40.89	2.49	0.4016	1.074	752	56179.3	2060
2.085	1.925	40.99	2.31	0.3247	1.067	753	56180.3	2020
2.039	1.937	40.99	2.292	0.3301	1.035	754	56181.3	1900
2.051	1.907	41.42	2.246	0.5059	1.028	755	56182.3	1980
2.041	1.935	41.51	1.992	0.5388	0.996	756	56183.3	1980
2.083	1.913	41.46	1.997	0.3604	0.999	757	56184.3	1960
2.079	1.922	41.51	1.875	0.2668	1.011	758	56185.3	2020
2.045	1.917	41.65	1.753	0.5781	0.952	759	56186.3	1960
2.061	1.905	41.84	1.606	0.6956	0.952	760	56187.3	1960
1.991	1.911	41.65	1.594	0.3748	0.947	761	56188.3	1860
2.025	1.959	41.51	1.667	0.5027	0.933	762	56189.3	1960
2.066	1.91	41.46	1.685	0.3391	0.957	763	56190.3	2000
2.085	1.918	41.32	1.841	0.2793	0.95	764	56191.3	1960
2.059	1.934	41.08	1.763	0.5574	0.955	765	56192.3	1900
2.071	1.925	41.08	1.699	0.4612	0.957	766	56193.3	2040
2.055	1.91	40.99	1.821	0.5007	0.967	767	56194.3	1980
2.064	1.946	40.7	1.875	0.7214	0.933	768	56195.3	1920
2.045	1.908	40.56	1.892	0.613	0.964	769	56196.3	2000
2.108	1.921	40.94	1.873	0.6272	0.967	770	56197.3	1980
2.057	1.902	40.84	1.843	0.387	0.945	771	56198.3	1940
2	1.938	41.18	1.748	0.4163	0.957	772	56199.3	1980
2.042	1.939	40.84	1.76	0.2791	0.964	773	56200.3	1900
2.023	1.941	41.08	1.782	0.363	0.962	774	56201.3	1960
2.009	1.926	40.8	1.748	0.3481	0.957	775	56202.3	1960
2.069	1.906	40.75	1.882	0.5281	0.955	776	56203.3	2000
2.02	1.917	40.75	1.851	0.7019	0.952	777	56204.3	1920
2.101	1.881	40.94	1.897	0.5464	0.935	778	56205.3	1940
2.026	1.932	40.75	1.904	0.6318	0.962	779	56206.3	1920
2.02	1.948	40.75	1.797	0.5776	0.957	780	56207.3	2000
2.034	1.979	40.56	0.962	0.7427	0.728	781	56208.3	1880
2.038	2.028	39.61	1.104	0.5667	0.72	782	56209.3	1740
1.9	2.062	37.37	1.499	0.0181	0.73	783	56210.3	1300
1.845	2.034	33.89	1.504	0.0254	0.718	784	56211.3	1200
1.816	1.985	29.47	1.462	0.0396	0.713	785	56212.3	1240

1.762	1.942	24.04	1.575	0.2568	0.72	786	56213.3	1220
1.706	1.897	17.71	1.89	0.0305	0.73	787	56214.3	1020
1.841	1.765	13.56	1.738	0.051	0.72	788	56215.3	1160
2.054	1.679	13.04	2.822	0.7952	1.003	789	56216.3	1100
2.175	1.586	14.95	3.796	0.1897	1.57	790	56217.3	1920
2.207	1.591	18.18	3.792	0.3816	1.565	791	56218.3	2340
2.261	1.621	21.47	3.635	0.4656	1.543	792	56219.3	2400
2.174	1.669	23.47	3.137	0.281	1.306	793	56220.3	2280
2.154	1.648	24.7	3.347	0.3767	1.284	794	56221.3	2140
2.131	1.688	25.85	3.33	0.5183	1.274	795	56222.3	2080
2.157	1.69	26.56	2.683	0.6365	0.935	796	56223.3	1780
2.114	1.759	26.7	2.512	0.6118	0.913	797	56224.3	1580
2.004	1.913	26.56	1.809	0.2749	0.73	798	56225.3	1440
2.039	1.901	26.47	1.56	0.3601	0.723	799	56226.3	1340
1.96	1.904	25.23	1.563	0.2087	0.728	800	56227.3	1300
1.912	1.909	23.23	1.716	0.1199	0.72	801	56228.3	1180
1.908	1.921	20.28	1.812	0.6946	0.701	802	56229.3	1120
1.858	1.897	16.71	1.665	0.4036	0.713	803	56230.3	1060
1.876	2.003	12.9	1.841	0.3228	0.73	804	56231.3	1140
2.041	2.155	12.76	3.54	0.5696	1.245	805	56232.3	1180
2.142	2.243	15.37	3.76	0.2791	1.582	806	56233.3	2040
2.205	2.197	18.42	3.77	0.3528	1.543	807	56234.3	2300
2.213	2.029	21.13	3.662	0.5305	1.545	808	56235.3	2360
2.225	1.945	23.47	3.335	0.4827	1.362	809	56236.3	2380
2.082	1.927	24.23	2.231	0.5583	0.72	810	56237.3	1860
1.962	1.911	22.66	2.056	0.407	0.723	811	56238.3	1420
1.922	1.852	19.37	1.938	0.2258	0.728	812	56239.3	1220
1.932	1.677	15.99	1.746	0.3076	0.723	813	56240.3	1120
2.025	1.58	15.42	2.644	0.2266	0.967	814	56241.3	1240
2.153	1.504	16.66	3.484	0.2661	1.353	815	56242.3	1820
2.227	1.633	19.18	3.65	0.4644	1.492	816	56243.3	2220
2.213	1.804	21.66	3.633	0.4082	1.499	817	56244.3	2320
2.177	1.859	24.28	2.781	0.583	1.074	818	56245.3	2420
2.086	1.895	24.94	2.244	0.5967	0.74	819	56246.3	1720
2.105	1.927	25.28	2.095	0.3455	0.737	820	56247.3	1540
2.03	1.911	25.47	2.043	0.6604	0.732	821	56248.3	1460
2.067	1.921	25.75	1.846	0.6675	0.742	822	56249.3	1420
2.043	1.904	25.7	1.616	0.3188	0.723	823	56250.3	1340
1.979	1.908	24.18	1.631	0.1704	0.718	824	56251.3	1200
1.937	1.958	22.42	1.743	0.5649	0.723	825	56252.3	1180
1.984	2.007	20.71	1.836	0.5925	0.72	826	56253.3	1040
1.932	2.158	18.66	2.012	0.5508	0.723	827	56254.3	1000
2.009	2.239	17.61	2.876	0.2759	1.16	828	56255.3	1260
2.167	2.281	18.99	3.723	0.3962	1.519	829	56256.3	2020
2.178	2.104	21.47	3.621	0.4585	1.509	830	56257.3	2340
2.17	2.016	23.75	3.589	0.3982	1.523	831	56258.3	2460
2.198	1.905	25.66	3.477	0.4741	1.445	832	56259.3	2540
2.153	1.934	27.13	3.132	0.4932	1.182	833	56260.3	2240
2.122	1.911	27.51	2.798	0.5671	0.962	834	56261.3	1780
2.042	1.902	27.8	2.5	0.7981	0.942	835	56262.3	1700
2.054	1.888	27.7	2.249	0.4944	0.854	836	56263.3	1560
2.006	1.92	27.94	1.868	0.2058	0.747	837	56264.3	1420
2.029	1.904	28.18	1.44	0.646	0.747	838	56265.3	1340
2.001	1.914	27.85	1.431	0.1311	0.74	839	56266.3	1420
1.978	1.884	27.47	1.367	0.2537	0.728	840	56267.3	1320
2.032	1.905	26.85	1.438	0.2969	0.718	841	56268.3	1320
2.005	1.898	26.37	1.365	0.467	0.725	842	56269.3	1280
2.031	1.901	25.85	1.47	0.4329	0.725	843	56270.3	1260
1.906	1.911	24.18	1.631	0.0723	0.728	844	56271.3	1200
1.89	1.937	20.94	1.726	0.4119	0.723	845	56272.3	1120
1.921	1.858	17.56	1.782	0.6067	0.718	846	56273.3	1060
1.989	1.728	16.14	1.602	0.0513	0.728	847	56274.3	1260
2.081	1.544	15.56	1.563	0.1807	0.728	848	56275.3	1200
2.08	1.569	14.71	1.677	0.7402	0.713	849	56276.3	1220
1.977	1.688	14.33	1.68	0.3792	0.728	850	56277.3	1120
1.945	1.803	12.23	1.836	0.3901	0.732	851	56278.3	1020
1.908	1.802	10.14	2.156	0.7803	0.725	852	56279.3	980
1.971	1.791	7.66	1.812	0.4995	0.718	853	56280.3	1020
1.904	1.815	5.76	2.134	0.5674	0.732	854	56281.3	980
2.006	1.811	4.61	2.241	0.3691	0.723	855	56282.3	880
2.053	1.821	3.38	2.339	0.71	0.754	856	56283.3	880
2.031	1.871	2.42	2.344	0.5754	0.737	857	56284.3	860

2.038	1.866	0.62	2.31	0.7446	0.723	858	56285.3	820
2.07	1.896	0.04	2.415	0.6711	0.718	859	56286.3	740
2.092	1.873	-0.05	2.434	0.2954	0.737	860	56287.3	740
2.121	1.868	-0.05	2.402	0.4209	0.73	861	56288.3	740
2.087	1.887	-0.05	2.295	0.1992	0.715	862	56289.3	760
2.113	1.882	0.04	2.449	0.334	0.728	863	56290.3	800
2.02	1.877	-0.05	2.29	0.2842	0.713	864	56291.3	780
2.078	1.896	2.23	2.607	0.1038	0.715	865	56292.3	780
2.073	1.931	3.09	2.349	0.7612	0.723	866	56293.3	800
2.051	1.917	3.57	2.292	0.512	0.718	867	56294.3	820
2.09	1.96	3.57	2.363	0.5188	0.728	868	56295.3	800
2.054	1.929	3.23	2.351	0.637	0.723	869	56296.3	840
2.071	1.891	1.62	2.285	0.3123	0.737	870	56297.3	800
2.174	1.846	0.04	2.7	0.2627	0.933	871	56298.3	900
2.218	1.816	3.71	3.42	0.3105	1.162	872	56299.3	1360
2.225	1.794	7.52	3.198	0.5217	1.206	873	56300.3	1760
2.163	1.74	10.42	2.878	0.478	1.199	874	56301.3	1920
2.162	1.858	12.52	2.639	0.5986	1.067	875	56302.3	2020
2.035	2.02	14.09	2.163	0.7117	1.03	876	56303.3	2020
2.058	2.13	14.75	2.856	0.0679	1.028	877	56304.3	1560
2.081	2.198	16.14	3.101	0.428	1.138	878	56305.3	1680
2.163	2.242	18.37	4.097	0.1013	1.807	879	56306.3	2080
2.193	2.144	21.94	3.801	0.5864	1.589	880	56307.3	2560
2.153	1.944	24.23	3.013	0.1643	1.23	881	56308.3	2360
2.131	1.876	25.8	2.7	0.4768	0.835	882	56309.3	1920
2.051	1.87	26.28	2.07	0.6523	0.757	883	56310.3	1500
2.02	1.89	26.42	1.753	0.3503	0.737	884	56311.3	1400
2.055	1.897	26.75	1.519	0.2036	0.742	885	56312.3	1280
1.981	1.922	26.32	1.531	0.7268	0.74	886	56313.3	1260
2.058	1.917	26.42	1.47	0.1538	0.742	887	56314.3	1300
1.99	1.895	26.13	1.479	0.7305	0.747	888	56315.3	1320
2.018	1.886	25.7	1.543	0.333	0.754	889	56316.3	1280
2.009	1.921	25.37	1.565	0.168	0.735	890	56317.3	1220
2.078	1.906	25.04	1.572	0.304	0.728	891	56318.3	1200
2.037	1.901	25.23	1.55	0.7871	0.747	892	56319.3	1160
2.024	1.903	25.23	1.597	0.5347	0.72	893	56320.3	1180
1.946	1.884	24.04	1.587	0.7493	0.718	894	56321.3	1180
1.88	1.899	21.85	1.702	0.4954	0.715	895	56322.3	1100
1.854	1.87	18.61	1.941	0.0862	0.72	896	56323.3	940
1.86	1.836	15.33	1.528	0.3452	0.732	897	56324.3	1080
2.047	1.683	13.95	2.817	0.6865	1.05	898	56325.3	1060
2.146	1.57	15.18	3.56	0.3286	1.382	899	56326.3	1860
2.208	1.62	17.61	3.462	0.3535	1.406	900	56327.3	2120
2.177	1.79	19.71	3.418	0.4558	1.392	901	56328.3	2220
2.192	1.889	21.94	3.394	0.4331	1.401	902	56329.3	2220
2.154	1.894	24.13	3.354	0.5166	1.392	903	56330.3	2320
2.136	1.866	25.85	3.491	0.5391	1.406	904	56331.3	2240
2.113	1.901	27.42	3.157	0.5566	1.216	905	56332.3	2120
2.077	1.882	27.75	1.831	0.6755	0.718	906	56333.3	1600
1.994	1.903	27.42	1.655	0.4893	0.728	907	56334.3	1480
1.964	1.936	25.85	1.563	0.7727	0.723	908	56335.3	1280
1.894	1.932	23.18	1.541	0.5305	0.72	909	56336.3	1160
1.828	1.942	19.56	1.885	0.7566	0.732	910	56337.3	1040
1.834	1.943	14.8	1.577	0.0996	0.718	911	56338.3	1080
1.721	1.984	9.38	2.178	0.561	0.723	912	56339.3	940
1.928	1.96	6.04	2.007	0.6313	0.742	913	56340.3	980
2.118	1.972	7.04	3.503	0.2856	1.343	914	56341.3	1420
2.273	2.059	11.42	3.701	0.425	1.563	915	56342.3	2240
2.256	2.182	16.14	3.643	0.5874	1.636	916	56343.3	2600
2.195	2.121	19.71	3.616	0.4487	1.643	917	56344.3	2940
2.167	1.98	23.47	3.572	0.4321	1.497	918	56345.3	2500
2.086	1.885	24.99	2.124	0.5869	0.723	919	56346.3	1940
1.921	1.846	23.18	1.912	0.4363	0.737	920	56347.3	1380
1.84	1.784	19.85	1.963	0.509	0.723	921	56348.3	1180
1.765	1.788	14.85	1.636	0.6643	0.732	922	56349.3	1060
1.775	1.835	9.09	2.256	0.5371	0.723	923	56350.3	920
2.053	1.832	7.99	3.423	0.5593	1.294	924	56351.3	1240
2.278	1.69	12.33	3.909	0.48	1.721	925	56352.3	2340
2.374	1.604	17.33	4.402	0.4229	2.278	926	56353.3	2820
2.381	1.714	22.94	4.409	0.4885	2.478	927	56354.3	3420
2.257	1.857	27.94	3.613	0.5154	1.985	928	56355.3	3980
2.219	1.866	30.94	3.208	0.2446	1.294	929	56356.3	2700

2.113	1.899	31.56	2.036	0.7822	0.723	930	56357.3	1920
2.081	1.989	31.89	1.731	0.3682	0.735	931	56358.3	1620
1.987	2.097	31.61	1.404	0.7754	0.723	932	56359.3	1580
1.952	2.14	30.8	1.411	0.6567	0.72	933	56360.3	1420
1.932	2.183	29.28	1.665	0.1367	0.723	934	56361.3	1140
1.938	2.229	26.85	1.719	0.126	0.723	935	56362.3	1080
1.819	2.178	23.04	1.685	0.1658	0.723	936	56363.3	1100
1.749	2.092	17.56	1.924	0.7102	0.718	937	56364.3	980
1.734	2.066	11.23	1.777	0.7478	0.725	938	56365.3	1040
1.685	1.979	3.23	2.205	0.7053	0.72	939	56366.3	820
1.966	1.913	0	2.329	0.1282	0.718	940	56367.3	760
2.089	1.913	0	2.363	0.1511	0.723	941	56368.3	680
2.099	1.899	-0.05	2.322	0.1145	0.728	942	56369.3	760
2.023	1.903	0.09	2.415	0.3701	0.725	943	56370.3	740
2.036	1.901	-0.05	2.427	0.2688	0.723	944	56371.3	740
2.091	1.894	0	2.708	0.2661	0.918	945	56372.3	780
2.193	1.904	2.47	3.599	0.1682	1.245	946	56373.3	1300
2.29	1.923	7.23	4.026	0.304	1.694	947	56374.3	1940
2.348	2.002	13.14	4.082	0.5598	1.831	948	56375.3	2460
2.22	2.145	18.04	4.229	0.5471	1.99	949	56376.3	2820
2.312	2.21	22.75	4.355	0.5552	2.817	950	56377.3	3320
2.318	2.171	28.7	4.282	0.8796	2.727	951	56378.3	4080
2.271	2.006	33.7	4.216	0.7288	2.102	952	56379.3	4120
2.203	1.879	36.99	4.089	0.55	2.026	953	56380.3	3280
2.202	1.81	39.37	4.043	0.4038	1.792	954	56381.3	2960
2.109	1.81	41.46	3.364	0.3337	1.394	955	56382.3	2640
2.113	1.818	42.13	2.783	0.3726	1.172	956	56383.3	2240
2.14	1.943	42.8	2.727	0.5789	1.167	957	56384.3	2040
2.029	1.889	43.32	2.327	0.5415	0.984	958	56385.3	2040
2.052	1.934	43.18	0.996	0.8257	0.747	959	56386.3	2080
1.99	1.907	42.7	1.116	0.5515	0.745	960	56387.3	1760
2.05	1.917	42.41	1.543	0.0225	0.742	961	56388.3	1280
2.036	1.928	42.18	1.501	0.0344	0.742	962	56389.3	1240
1.992	1.934	41.99	1.677	0.0408	0.82	963	56390.3	1380
2.034	1.9	41.65	1.45	0.792	0.879	964	56391.3	1840
2.047	1.906	41.22	1.436	0.8042	0.928	965	56392.3	2000
2.078	1.93	41.03	1.563	0.2822	0.918	966	56393.3	1960
2.079	1.903	41.13	1.616	0.3687	0.933	967	56394.3	1940
2.053	1.901	41.13	1.719	0.6125	0.967	968	56395.3	2040
1.99	1.899	41.32	1.655	0.6833	0.962	969	56396.3	1880
2.072	1.91	41.13	1.643	0.4243	0.962	970	56397.3	1960
2.094	1.92	41.61	1.907	0.479	0.981	971	56398.3	2000
2.048	1.896	41.61	1.814	0.5234	0.999	972	56399.3	1940
2.061	1.91	41.75	1.88	0.4688	0.981	973	56400.3	2040
2.038	1.929	41.61	1.069	0.7698	0.742	974	56401.3	2020
1.992	1.93	41.8	0.977	0.5125	0.737	975	56402.3	1860
2.068	1.929	41.18	1.443	0.0339	0.767	976	56403.3	1460
2.02	1.902	41.08	1.587	0.1821	0.908	977	56404.3	1560
2.069	1.922	40.7	1.509	0.8262	0.928	978	56405.3	2060
2.051	1.927	40.42	1.626	0.5564	0.942	979	56406.3	1960
2.035	1.927	40.32	1.626	0.4324	0.938	980	56407.3	1920
2.034	1.91	40.37	1.626	0.3557	0.938	981	56408.3	1920
2.111	1.922	40.42	1.694	0.47	0.925	982	56409.3	1920
2.005	1.917	40.61	1.584	0.4751	0.923	983	56410.3	1920
2.08	1.932	40.51	0.964	0.7783	0.718	984	56411.3	1920
2.04	1.922	40.32	1.226	0.4119	0.713	985	56412.3	1540
2.097	1.902	39.84	1.621	0.0234	0.723	986	56413.3	1160
2.008	1.923	39.23	1.443	0.0247	0.73	987	56414.3	1240
2.024	1.903	39.03	1.357	0.4602	0.72	988	56415.3	1200
2.025	1.946	38.13	1.414	0.6301	0.72	989	56416.3	1200
2.001	1.956	36.84	1.497	0.7639	0.737	990	56417.3	1200
1.98	1.967	35.08	1.509	0.3223	0.728	991	56418.3	1200
1.907	1.941	32.56	1.506	0.3708	0.72	992	56419.3	1200
1.913	1.912	29.61	1.479	0.553	0.73	993	56420.3	1200
1.902	1.915	26.51	1.477	0.7188	0.728	994	56421.3	1200
1.848	1.913	23.61	1.592	0.3469	0.776	995	56422.3	1140
1.834	1.91	19.33	1.833	0.5583	0.73	996	56423.3	1060
1.73	1.925	13.47	1.519	0.4163	0.735	997	56424.3	1080
1.725	1.935	7.14	2.156	0.5852	0.728	998	56425.3	940
1.918	1.928	3.66	2.449	0.2166	0.945	999	56426.3	860
2.258	1.91	7.09	4.16	0.3049	1.863	1000	56427.3	1720
2.382	1.897	14.47	4.365	0.46	2.124	1001	56428.3	2680

2.319	1.883	20.71	4.153	0.5017	2.229	1002	56429.3	3160
2.301	1.907	26.23	4.219	0.5891	2.395	1003	56430.3	3740
2.256	1.887	30.42	4.534	0.4363	2.402	1004	56431.3	3400
2.226	1.911	34.37	4.263	0.533	2.212	1005	56432.3	3120
2.177	1.901	36.94	3.674	0.3821	1.602	1006	56433.3	2940
2.152	1.914	38.42	3.64	0.5583	1.519	1007	56434.3	2660
2.171	1.928	40.03	3.904	0.3884	1.411	1008	56435.3	1920
2.107	1.912	40.7	2.949	0.6372	1.086	1009	56436.3	1940
2.056	1.926	41.13	1.917	0.6663	0.862	1010	56437.3	1960
2.032	1.934	40.99	1.326	0.3232	0.874	1011	56438.3	1980
2.003	1.902	40.84	1.375	0.2964	0.867	1012	56439.3	1900
1.97	1.931	40.46	1.382	0.1633	0.874	1013	56440.3	1900
2.057	1.924	40.42	1.404	0.7334	0.879	1014	56441.3	1940
2.058	1.93	40.13	1.455	0.1877	0.859	1015	56442.3	1920
1.992	1.91	40.27	1.448	0.2683	0.867	1016	56443.3	1960
2.038	1.952	40.08	1.401	0.4871	0.879	1017	56444.3	1900
2.111	1.916	40.32	1.558	0.4883	0.859	1018	56445.3	1900
2.052	1.896	40.08	0.85	0.7632	0.74	1019	56446.3	1920
2.049	1.907	39.61	1.287	0.342	0.737	1020	56447.3	1540
2.027	1.952	39.56	1.787	0.0947	0.886	1021	56448.3	1500
2.025	1.952	39.27	1.465	0.8059	0.898	1022	56449.3	1920
2.026	2.012	39.32	1.855	0.1348	0.942	1023	56450.3	1820
2.029	2.088	39.56	1.741	0.6519	0.957	1024	56451.3	1920
2.041	2.071	39.51	1.729	0.6401	0.972	1025	56452.3	1900
2.044	2.037	39.65	1.748	0.2952	0.967	1026	56453.3	1860
2.056	2.029	39.8	1.804	0.3621	0.964	1027	56454.3	1840
2.038	2.057	39.99	1.794	0.4626	0.947	1028	56455.3	1880
2.037	2.05	39.8	1.821	0.5234	0.952	1029	56456.3	1940
2.046	2.068	39.89	1.75	0.3635	0.964	1030	56457.3	1920
2.041	2.094	40.13	2.046	0.2942	1.03	1031	56458.3	1900
2.034	2.042	40.37	2.056	0.6804	1.04	1032	56459.3	1920
2.076	1.943	40.27	2.056	0.4993	1.035	1033	56460.3	1880
2.073	1.918	40.56	2.112	0.6873	1.038	1034	56461.3	1960
2.077	1.879	40.65	2.136	0.5322	1.042	1035	56462.3	1960
2.048	1.892	40.7	2.151	0.5129	1.047	1036	56463.3	1880
2.095	1.76	40.84	2.139	0.4851	1.021	1037	56464.3	1900
2.068	1.715	40.75	2.085	0.4797	1.033	1038	56465.3	1940
2.063	1.74	40.94	2.097	0.5791	1.038	1039	56466.3	1940
2.089	1.779	41.03	2.175	0.418	1.023	1040	56467.3	1940
2.068	1.766	40.89	2.063	0.5225	1.035	1041	56468.3	1980
2.093	1.747	41.22	2.173	0.3723	1.03	1042	56469.3	1980
2.03	1.759	41.22	2.075	0.541	1.055	1043	56470.3	2000
2.066	1.768	41.13	1.082	0.6296	0.745	1044	56471.3	1960
2.089	1.768	40.65	0.994	0.7788	0.735	1045	56472.3	1780
2.038	1.76	40.37	1.294	0.1687	0.718	1046	56473.3	1460
2.005	1.775	39.84	1.482	0.0203	0.728	1047	56474.3	1240
2.019	1.734	39.27	1.567	0.0142	0.725	1048	56475.3	1180
2.058	1.763	38.65	1.431	0.0361	0.737	1049	56476.3	1260
1.955	1.767	37.75	1.538	0.0208	0.747	1050	56477.3	1160
1.886	1.886	34.75	1.501	0.0127	0.73	1051	56478.3	1140
1.801	1.949	30.04	1.528	0.0334	0.718	1052	56479.3	1160
1.807	1.933	25.09	1.453	0.2229	0.728	1053	56480.3	1220
1.773	1.952	19.8	1.694	0.6663	0.723	1054	56481.3	1060
1.806	1.946	14.52	1.558	0.394	0.723	1055	56482.3	1120
1.774	1.972	8.99	2.048	0.6514	0.728	1056	56483.3	940
1.805	1.961	3.66	2.046	0.8198	0.723	1057	56484.3	920
1.877	1.934	0	2.163	0.8186	0.718	1058	56485.3	840
1.975	1.939	0	2.346	0.239	0.73	1059	56486.3	760
2.054	1.938	-0.05	2.327	0.0559	0.725	1060	56487.3	780
2.035	1.933	-0.05	2.349	0.1963	0.725	1061	56488.3	760
2.039	1.926	0	2.417	0.3516	0.713	1062	56489.3	780
2.022	1.928	0	2.434	0.3901	0.742	1063	56490.3	720
2.024	1.932	0	2.388	0.6235	0.715	1064	56491.3	780
2.062	1.93	0	2.417	0.3923	0.737	1065	56492.3	720
2.076	1.935	0	2.339	0.3503	0.728	1066	56493.3	780
2.022	1.922	0.09	2.363	0.2178	0.72	1067	56494.3	720
2.057	1.941	-0.05	2.31	0.2549	0.728	1068	56495.3	760
2.089	1.933	-0.05	2.383	0.1902	0.737	1069	56496.3	760
2.044	1.929	-0.05	2.368	0.2844	0.723	1070	56497.3	740
2.044	1.908	-0.05	2.317	0.4133	0.725	1071	56498.3	780
2.035	1.934	-0.05	2.334	0.3633	0.723	1072	56499.3	780
2.069	1.928	-0.05	2.31	0.4846	0.708	1073	56500.3	740

2.112	1.949	0.04	3.672	0.624	1.221	1074	56501.3	880
2.363	1.9	6.66	4.321	0.1201	1.973	1075	56502.3	2040
2.423	1.935	14.23	4.46	0.2734	2.212	1076	56503.3	2640
2.345	1.889	20.71	4.463	0.4124	2.7	1077	56504.3	3140
2.314	1.874	26.42	4.126	0.5183	2.427	1078	56505.3	3840
2.275	1.853	30.89	4.517	0.4473	2.454	1079	56506.3	3500
2.246	1.91	34.56	4.39	0.4351	2.476	1080	56507.3	3120
2.196	1.917	38.03	4.387	0.6184	2.439	1081	56508.3	3260
2.213	1.909	40.42	3.999	0.5386	2.058	1082	56509.3	3440
2.128	1.901	42.99	3.718	0.3401	1.57	1083	56510.3	2820
2.095	1.947	44.13	3.411	0.4609	1.287	1084	56511.3	2320
2.084	1.957	44.37	3.518	0.4844	1.072	1085	56512.3	1820
2.046	1.964	44.75	3.118	0.5586	1.025	1086	56513.3	1480
2.035	2.009	44.65	1.548	0.7925	0.737	1087	56514.3	1500
2.035	1.998	44.32	1.313	0.1868	0.725	1088	56515.3	1540
2.078	1.989	43.7	1.313	0.0801	0.75	1089	56516.3	1420
2.017	1.943	43.41	1.323	0.2261	0.75	1090	56517.3	1420
1.994	1.947	43.03	1.309	0.2192	0.752	1091	56518.3	1460
2.016	1.841	43.08	1.284	0.5825	0.759	1092	56519.3	1500
2.032	1.919	42.56	1.992	0.2551	0.903	1093	56520.3	1500
2.035	1.903	42.41	2.273	0.6692	0.957	1094	56521.3	1620
2.041	1.828	42.75	2.671	0.0381	0.986	1095	56522.3	1440
2.062	1.74	42.8	3.208	0.4116	1.06	1096	56523.3	1420
2.052	1.703	43.03	3.303	0.603	1.074	1097	56524.3	1400
2.068	1.712	42.94	3.237	0.4426	1.069	1098	56525.3	1420
2.042	1.693	43.22	3.242	0.4341	1.084	1099	56526.3	1420
2.073	1.764	43.56	3.306	0.5752	1.074	1100	56527.3	1440
2.007	1.864	43.8	3.262	0.7087	1.074	1101	56528.3	1480
2.088	1.881	44.08	3.235	0.6047	1.055	1102	56529.3	1460
2.088	1.887	44.18	3.281	0.5212	1.074	1103	56530.3	1480
2.098	1.9	44.46	3.281	0.4629	1.069	1104	56531.3	1480
2.046	1.953	44.8	3.188	0.6877	1.069	1105	56532.3	1440
2.059	1.955	44.7	3.24	0.3723	1.072	1106	56533.3	1480
2.086	1.897	45.08	2.683	0.6003	0.979	1107	56534.3	1540
2.023	1.89	45.27	2.554	0.3372	0.972	1108	56535.3	1560
2.074	1.903	44.75	1.25	0.7063	0.747	1109	56536.3	1460
1.999	1.937	44.37	1.189	0.5461	0.752	1110	56537.3	1500
2.028	1.949	44.18	1.355	0.0391	0.752	1111	56538.3	1560
2.05	1.899	43.6	1.333	0.1492	0.762	1112	56539.3	1500
2.017	1.918	43.22	1.362	0.4741	0.759	1113	56540.3	1480
2.048	1.93	43.18	1.343	0.4812	0.767	1114	56541.3	1440
2.083	1.913	42.61	1.377	0.7014	0.771	1115	56542.3	1500
2.087	1.926	42.41	1.365	0.4033	0.774	1116	56543.3	1520
2.01	1.929	41.89	1.396	0.4448	0.771	1117	56544.3	1440
2.052	1.901	41.7	1.426	0.2454	0.767	1118	56545.3	1460
1.973	1.903	41.37	1.294	0.5664	0.728	1119	56546.3	1340
1.986	1.907	40.75	1.289	0.0408	0.737	1120	56547.3	1320
1.978	1.919	39.61	1.316	0.3926	0.725	1121	56548.3	1320
1.919	1.932	37.94	1.462	0.4199	0.718	1122	56549.3	1260
1.958	1.944	36.23	1.401	0.4612	0.725	1123	56550.3	1300
1.99	1.912	35.42	1.304	0.4944	0.723	1124	56551.3	1300
1.95	1.908	34.04	1.362	0.572	0.723	1125	56552.3	1280
1.963	1.901	32.61	1.338	0.1636	0.718	1126	56553.3	1260
1.985	1.911	31.18	1.375	0.75	0.728	1127	56554.3	1320
1.909	1.907	28.89	1.426	0.2312	0.723	1128	56555.3	1280
1.864	1.912	25.32	1.375	0.666	0.737	1129	56556.3	1260
1.833	1.939	20.71	1.719	0.1433	0.723	1130	56557.3	1080
1.806	1.953	15.18	1.592	0.0422	0.708	1131	56558.3	1020
1.741	1.948	9.47	2.124	0.447	0.723	1132	56559.3	1020
1.816	1.934	4.28	1.941	0.8342	0.728	1133	56560.3	940
1.923	1.933	0.95	2.134	0.834	0.728	1134	56561.3	900
1.994	1.924	0	2.229	0.5813	0.72	1135	56562.3	760
2.06	1.931	-0.05	2.239	0.106	0.72	1136	56563.3	760
2.022	1.911	0	2.236	0.5017	0.718	1137	56564.3	820
2.018	1.924	-0.05	2.378	0.228	0.718	1138	56565.3	760
2.058	1.915	0	2.368	0.5754	0.71	1139	56566.3	720
2.058	1.915	0	2.778	0.6045	0.994	1140	56567.3	740
2.344	1.921	4.19	4.011	0.3423	1.675	1141	56568.3	1800
2.396	1.887	11.47	4.248	0.4246	2.004	1142	56569.3	2460
2.342	1.888	18.42	4.585	0.4487	2.939	1143	56570.3	3020
2.318	1.876	24.8	4.568	0.8667	2.905	1144	56571.3	3620
2.305	1.886	30.47	4.185	0.6846	2.446	1145	56572.3	4300

2.247	1.907	34.13	4.417	0.5798	2.473	1146	56573.3	3260
2.183	1.916	37.23	4.021	0.5518	1.946	1147	56574.3	3260
2.211	1.899	39.42	3.647	0.4058	1.543	1148	56575.3	2840
2.096	1.908	40.65	3.137	0.2961	1.338	1149	56576.3	2400
2.088	1.91	41.42	2.971	0.4424	1.245	1150	56577.3	2400
2.102	1.93	41.8	2.651	0.5552	1.211	1151	56578.3	2260
2.067	1.915	42.22	2.573	0.4348	1.189	1152	56579.3	2300
2.051	1.913	42.61	2.427	0.4668	1.201	1153	56580.3	2300
1.997	1.911	42.89	2.053	0.4668	1.021	1154	56581.3	2200
2.06	1.916	43.32	1.858	0.585	1.018	1155	56582.3	2000
2.042	1.929	43.27	1.802	0.5095	1.038	1156	56583.3	2140
2.053	1.939	43.41	1.79	0.6848	1.03	1157	56584.3	2080
2.055	1.935	43.51	1.733	0.2769	0.955	1158	56585.3	2080
2.058	1.947	43.6	2.29	0.3733	0.923	1159	56586.3	1520
2.077	1.96	43.56	2.163	0.4304	0.857	1160	56587.3	1420
2.018	1.957	43.65	2.041	0.5417	0.859	1161	56588.3	1520
2.071	2.038	43.6	1.956	0.3347	0.864	1162	56589.3	1460
2.01	2.026	43.32	2.136	0.2603	0.881	1163	56590.3	1500
1.999	2.017	43.22	2.156	0.1228	0.876	1164	56591.3	1480
2.042	1.918	43.03	2.188	0.5547	0.884	1165	56592.3	1420
2.111	1.924	42.61	2.166	0.5874	0.874	1166	56593.3	1380
2.079	1.893	42.41	2.173	0.4438	0.894	1167	56594.3	1440
2.027	1.938	41.99	2.197	0.5747	0.898	1168	56595.3	1420
2.03	1.921	42.08	2.236	0.3997	0.935	1169	56596.3	1380
2.015	1.92	41.89	2.505	0.1079	0.947	1170	56597.3	1380
2.055	1.926	42.03	2.507	0.6228	0.942	1171	56598.3	1380
2.075	1.913	42.56	2.456	0.6023	0.952	1172	56599.3	1400
2.109	1.932	42.7	2.517	0.5374	0.957	1173	56600.3	1440
2.021	1.896	42.99	2.524	0.5071	0.962	1174	56601.3	1400
2.037	1.914	43.03	2.568	0.5703	0.974	1175	56602.3	1420
2	1.94	43.56	2.478	0.6814	0.959	1176	56603.3	1460
2.036	1.958	43.75	2.495	0.334	0.964	1177	56604.3	1500
2.043	1.95	43.94	2.456	0.4058	0.969	1178	56605.3	1500
2.054	1.908	43.89	2.454	0.4277	0.935	1179	56606.3	1460
2.014	1.899	43.94	1.335	0.8484	0.728	1180	56607.3	1460
2.024	1.926	43.37	1.27	0.6069	0.745	1181	56608.3	1420
2.043	1.992	43.18	1.831	0.0366	0.894	1182	56609.3	1420
2.007	1.905	43.37	2.078	0.5498	0.938	1183	56610.3	1660
2.057	1.869	43.32	2.346	0.5212	0.923	1184	56611.3	1520
2.032	1.812	43.18	1.287	0.6641	0.73	1185	56612.3	1520
2.036	1.747	42.56	1.255	0.4558	0.723	1186	56613.3	1420
1.972	1.723	41.37	1.362	0.0393	0.728	1187	56614.3	1340
1.925	1.797	38.56	1.394	0.0276	0.728	1188	56615.3	1280
1.937	1.881	34.99	1.465	0.0476	0.725	1189	56616.3	1220
1.978	1.826	32.32	1.538	0.4216	0.723	1190	56617.3	1180
1.995	1.849	31.37	1.489	0.436	0.708	1191	56618.3	1180
1.965	1.865	29.8	1.416	0.4146	0.73	1192	56619.3	1200
2.003	1.888	28.94	1.416	0.6763	0.728	1193	56620.3	1200
1.959	1.894	28.04	1.472	0.1721	0.73	1194	56621.3	1160
2.011	1.938	27.56	1.482	0.7007	0.723	1195	56622.3	1200
2.008	1.905	27.23	1.519	0.0964	0.73	1196	56623.3	1140
1.946	1.911	25.61	1.538	0.0313	0.723	1197	56624.3	1180
1.878	1.914	22.51	1.484	0.5339	0.737	1198	56625.3	1200
1.797	1.936	17.8	1.638	0.4294	0.72	1199	56626.3	1020
1.978	1.92	15.52	1.558	0.085	0.73	1200	56627.3	1100
1.979	1.923	13.9	1.636	0.02	0.725	1201	56628.3	1060
1.939	1.931	13.14	1.76	0.0508	0.725	1202	56629.3	1040
2.131	2	13.28	3.521	0.4329	1.206	1203	56630.3	1360
2.125	2.099	15.09	2.852	0.7244	1.052	1204	56631.3	1880
2.106	2.219	15.75	3.062	0.4346	1.045	1205	56632.3	1660
2.028	2.232	16.71	3.481	0.3196	1.287	1206	56633.3	1620
2.152	2.232	19.52	4.456	0.0381	2.156	1207	56634.3	2320
2.207	2.049	23.61	4.634	0.5696	2.451	1208	56635.3	2740
2.269	1.911	27.94	4.326	0.4314	2.397	1209	56636.3	2960
2.194	1.875	31.08	4.097	0.543	1.919	1210	56637.3	2920
2.207	1.895	33.32	4.001	0.5933	1.826	1211	56638.3	2980
2.074	1.903	34.13	1.924	0.5791	0.728	1212	56639.3	2440
2.112	1.919	33.51	1.687	0.0669	0.718	1213	56640.3	1740
2.051	1.94	32.89	1.44	0.5933	0.728	1214	56641.3	1660
1.955	1.956	31.18	1.245	0.8091	0.723	1215	56642.3	1500
2.022	1.925	29.85	1.726	0.2476	0.879	1216	56643.3	1320
2.067	1.889	30.18	3.459	0.446	1.392	1217	56644.3	1940

2.118	1.898	31.66	3.762	0.5525	1.55	1218	56645.3	2200
2.123	1.929	33.61	4.233	0.4275	1.88	1219	56646.3	2480
2.188	1.959	35.99	4.167	0.6113	1.851	1220	56647.3	2680
2.169	1.913	37.99	3.953	0.5464	1.724	1221	56648.3	2640
2.118	1.917	40.22	4.277	0.4812	2.004	1222	56649.3	2640
2.145	1.891	42.65	4.414	0.3794	2.251	1223	56650.3	2900
2.181	1.895	45.22	4.424	0.5442	2.273	1224	56651.3	2860
2.222	1.851	47.89	4.465	0.5647	2.271	1225	56652.3	2980
2.119	1.936	50.13	4.707	0.6543	4.155	1226	56653.3	3100
2.125	1.917	52.41	4.6	0.853	2.544	1227	56654.3	3800
2.145	1.851	54.94	4.329	0.6404	2.522	1228	56655.3	3260
2.03	1.89	56.51	4.043	0.5999	1.902	1229	56656.3	3300
2.12	1.848	57.32	2.969	0.3142	1.226	1230	56657.3	2780
2.039	1.921	57.22	2.297	0.5107	1.069	1231	56658.3	2120
1.998	1.947	56.98	2.566	0.6411	1.228	1232	56659.3	2140
1.935	1.978	57.13	3.484	0.2205	1.475	1233	56660.3	2400
2.077	1.903	57.32	3.601	0.5151	1.531	1234	56661.3	2500
2.162	1.867	57.7	4.207	0.4341	1.66	1235	56662.3	2260
2.069	1.917	58.17	4.275	0.467	1.743	1236	56663.3	1920
2.063	1.911	58.55	4.321	0.6328	1.746	1237	56664.3	1940
2.002	1.908	58.98	4.343	0.5969	1.748	1238	56665.3	2000
2.079	1.914	59.55	4.307	0.6523	1.738	1239	56666.3	1980
2.118	1.874	59.89	4.077	0.6633	1.572	1240	56667.3	2020
2.052	1.932	60.22	3.442	0.6279	1.294	1241	56668.3	2120
2.04	1.934	59.55	1.567	0.7202	0.815	1242	56669.3	2060
2.101	1.908	59.17	0.901	0.6887	0.813	1243	56670.3	1920
2.071	1.929	58.22	1.802	0.407	1.035	1244	56671.3	2040
2.136	1.904	58.6	3.877	0.3586	1.443	1245	56672.3	2140
2.02	1.892	58.89	3.914	0.614	1.455	1246	56673.3	1960
2.131	1.881	59.74	2.886	0.6956	1.138	1247	56674.3	2000
1.998	1.925	59.46	1.824	0.5813	0.974	1248	56675.3	2020
1.911	1.907	59.51	1.768	0.1082	1.001	1249	56676.3	1960
2.075	1.883	59.36	2.104	0.4319	1.079	1250	56677.3	2000
2.065	1.812	59.36	2.429	0.4792	1.121	1251	56678.3	2080
2.063	1.823	59.65	2.495	0.6167	1.128	1252	56679.3	2080
2.151	1.833	59.55	2.095	0.7522	1.035	1253	56680.3	2040
2.013	1.844	59.7	1.606	0.615	0.967	1254	56681.3	1920
2.115	1.813	59.51	1.855	0.1538	1.001	1255	56682.3	1960
2.026	1.855	59.93	2.622	0.1553	1.16	1256	56683.3	2000
2.075	1.789	60.08	2.739	0.6343	1.172	1257	56684.3	2040
2.021	1.814	60.79	1.997	0.7671	0.986	1258	56685.3	2060
2.037	1.836	60.41	0.898	0.7534	0.742	1259	56686.3	2040
2.016	1.807	60.74	0.735	0.8022	0.745	1260	56687.3	1940
1.995	1.885	60.65	0.847	0.0386	0.73	1261	56688.3	1860
1.926	1.866	60.12	0.75	0.021	0.742	1262	56689.3	2000
1.932	1.844	60.03	1.182	0.0393	0.874	1263	56690.3	1920
1.925	1.956	59.6	1.326	0.3887	0.938	1264	56691.3	2040
2.068	1.915	59.41	1.453	0.4814	0.935	1265	56692.3	2020
2.008	1.889	59.36	1.45	0.4124	0.942	1266	56693.3	1960
2.049	1.921	59.41	1.541	0.5313	0.94	1267	56694.3	2020
1.932	1.976	58.89	1.643	0.6233	0.938	1268	56695.3	2000
2.09	1.983	58.74	1.841	0.6428	1.011	1269	56696.3	1940
2.054	1.956	58.84	2.297	0.5176	1.101	1270	56697.3	1960
2.087	1.955	59.03	2.681	0.4436	1.138	1271	56698.3	2080
2.142	1.905	59.41	2.544	0.3906	1.169	1272	56699.3	2020
2.083	1.945	59.74	2.661	0.4651	1.174	1273	56700.3	2000
1.999	1.971	59.98	2.742	0.4985	1.169	1274	56701.3	1980
2.069	1.984	60.32	2.661	0.2825	1.174	1275	56702.3	2020
1.98	1.984	60.32	1.587	0.752	0.94	1276	56703.3	2000
1.977	1.986	60.17	1.528	0.1914	1.035	1277	56704.3	2020
2.046	1.971	59.89	1.641	0.543	0.942	1278	56705.3	2160
2.108	1.935	60.08	1.538	0.521	0.942	1279	56706.3	2020
2.024	1.973	59.79	1.536	0.4277	0.945	1280	56707.3	2020
2.025	1.856	59.55	1.521	0.6116	0.95	1281	56708.3	1980
2.095	1.924	59.65	1.646	0.6292	0.952	1282	56709.3	1960
1.953	1.896	59.03	1.636	0.3818	0.957	1283	56710.3	2000
2.026	1.899	58.6	1.624	0.4626	0.964	1284	56711.3	2000
2.086	1.935	57.98	1.738	0.6243	0.942	1285	56712.3	1960
1.994	1.873	57.6	1.68	0.5454	0.959	1286	56713.3	1900
2.07	1.909	56.79	1.758	0.5234	0.957	1287	56714.3	1880
2.175	1.904	56.32	2.114	0.4426	1.052	1288	56715.3	1860
2.04	1.83	56.03	2.4	0.3762	1.079	1289	56716.3	1880

2.053	1.838	55.84	2.915	0.5354	1.16	1290	56717.3	1860
2.005	1.862	55.51	3.093	0.5354	1.174	1291	56718.3	1840
2.003	1.798	55.13	3.145	0.4312	1.165	1292	56719.3	1820
2.04	1.82	55.22	3.25	0.3906	1.228	1293	56720.3	1860
2.059	1.829	55.41	4.363	0.0549	1.704	1294	56721.3	1860
2.046	1.888	56.13	4.37	0.4734	1.743	1295	56722.3	1900
2.03	1.875	57.08	4.312	0.6448	1.714	1296	56723.3	1940
2.127	1.807	57.7	4.026	0.6902	1.499	1297	56724.3	1960
2.049	1.789	58.27	3.513	0.6423	1.343	1298	56725.3	1920
2.052	1.821	58.65	3.203	0.6177	1.25	1299	56726.3	1900
2.023	1.858	58.65	2.444	0.5171	1.111	1300	56727.3	1940
2.146	1.864	58.74	2.515	0.1829	1.094	1301	56728.3	1980
2.026	1.87	58.79	1.814	0.6172	1.006	1302	56729.3	1940
2.04	1.911	58.7	1.792	0.1392	1.025	1303	56730.3	1980
2.118	1.943	58.79	1.826	0.5874	1.001	1304	56731.3	2020
1.998	1.861	59.03	1.887	0.6848	1.016	1305	56732.3	2000
2.095	1.88	59.22	1.777	0.5923	1.011	1306	56733.3	2000
2.022	1.913	59.36	1.78	0.5388	1.006	1307	56734.3	2040
2.001	1.946	59.27	1.626	0.696	0.947	1308	56735.3	2000
2.051	1.864	59.22	1.616	0.4001	0.938	1309	56736.3	1940
2.082	1.908	58.84	1.599	0.3542	0.955	1310	56737.3	1980
2.04	1.888	58.51	1.096	0.6079	0.764	1311	56738.3	1980
1.999	1.968	57.7	0.73	0.8472	0.72	1312	56739.3	1980
2.004	1.949	57.51	1.501	0.4956	0.957	1313	56740.3	1900
1.995	1.857	57.22	1.88	0.6626	1.069	1314	56741.3	2140
1.933	1.896	57.27	2.671	0.2791	1.128	1315	56742.3	2060
2.129	1.861	57.41	2.627	0.4836	1.152	1316	56743.3	2060
2.141	1.956	57.84	2.466	0.6653	1.057	1317	56744.3	1960
2.103	1.971	57.98	1.912	0.6096	0.996	1318	56745.3	1900
1.934	1.913	57.89	1.726	0.1768	0.984	1319	56746.3	1900
2.007	1.879	58.03	1.641	0.4487	0.972	1320	56747.3	1900
2.081	1.932	58.27	1.643	0.6245	0.952	1321	56748.3	1940
2.023	1.932	58.27	1.616	0.3372	0.95	1322	56749.3	1960
2.135	1.898	58.27	0.923	0.7664	0.762	1323	56750.3	1900
1.981	1.889	58.13	0.854	0.7791	0.732	1324	56751.3	1940
1.897	1.904	57.79	0.874	0.0415	0.725	1325	56752.3	1860
2.085	1.919	58.17	3.059	0.2578	1.335	1326	56753.3	2160
2.003	1.875	58.98	3.237	0.4434	1.406	1327	56754.3	2480
2.145	1.963	60.03	3.823	0.3713	1.45	1328	56755.3	2000
2.072	1.949	60.74	3.442	0.5598	1.321	1329	56756.3	2020
2.07	1.879	60.79	2.969	0.5715	1.235	1330	56757.3	2000
1.986	1.886	61.08	2.505	0.5676	1.096	1331	56758.3	2040
1.957	1.972	61.27	2.148	0.4319	1.091	1332	56759.3	2120
2.041	1.91	61.31	2.449	0.2209	1.157	1333	56760.3	2040
2.055	1.943	61.51	2.466	0.4329	1.172	1334	56761.3	2120
2.012	1.924	61.7	2.517	0.5713	1.172	1335	56762.3	2120
2.087	1.969	61.41	1.414	0.7844	0.801	1336	56763.3	2060
1.954	1.927	61.03	0.728	0.8459	0.737	1337	56764.3	1980
2.132	1.999	60.51	0.835	0.3289	0.684	1338	56765.3	2220
1.997	1.961	59.74	0.767	0.0459	0.745	1339	56766.3	1900
1.927	1.932	59.08	0.835	0.1101	0.767	1340	56767.3	1920
2.129	1.993	58.36	1.414	0.2214	0.928	1341	56768.3	1980
2.056	1.944	58.55	1.929	0.498	1.052	1342	56769.3	2120
2.137	1.933	58.41	2.378	0.5991	1.128	1343	56770.3	2000
2.058	1.923	58.6	2.488	0.5747	1.135	1344	56771.3	1960
1.998	1.933	58.98	2.588	0.3958	1.157	1345	56772.3	1960
1.937	1.972	58.79	2.554	0.3303	1.152	1346	56773.3	1940
2.012	1.954	58.65	2.114	0.6499	1.055	1347	56774.3	1940
2.105	1.972	58.65	2.124	0.55	1.042	1348	56775.3	1940
2.068	1.951	58.89	3.14	0.2549	1.221	1349	56776.3	1980
2.085	1.949	59.17	3.201	0.4858	1.238	1350	56777.3	2040
2.079	1.951	59.17	3.218	0.51	1.23	1351	56778.3	1920
2.148	1.945	59.36	3.105	0.6343	1.24	1352	56779.3	1980
2.037	1.981	59.6	3.083	0.5515	1.201	1353	56780.3	2000
2.08	1.945	59.7	3.013	0.606	1.206	1354	56781.3	2000
2.069	1.956	59.65	2.524	0.5356	0.989	1355	56782.3	1960
2.161	1.958	59.74	1.667	0.5076	0.974	1356	56783.3	2040
2.025	1.948	59.17	1.592	0.1807	0.962	1357	56784.3	1940
2.095	1.926	59.22	2.314	0.2246	1.096	1358	56785.3	2020
1.99	1.919	59.32	2.395	0.644	1.089	1359	56786.3	1980
2.17	1.917	58.84	0.835	0.8569	0.728	1360	56787.3	2020
1.989	1.928	58.46	1.489	0.5132	0.957	1361	56788.3	1960

2.134	1.896	57.84	2.051	0.6326	1.101	1362	56789.3	2080
1.956	1.93	58.13	2.52	0.4585	1.147	1363	56790.3	2020
2.045	1.914	58.17	2.673	0.5598	1.125	1364	56791.3	1980
2.051	1.89	58.17	2.551	0.3525	1.14	1365	56792.3	1940
1.982	1.931	58.55	2.461	0.5139	1.121	1366	56793.3	1940
2.067	1.939	58.32	2.388	0.5347	1.118	1367	56794.3	1960
2.024	1.921	58.51	2.441	0.4272	1.118	1368	56795.3	1920
1.989	1.926	58.6	2.407	0.5305	1.113	1369	56796.3	1940
1.987	1.935	58.74	2.4	0.4885	1.118	1370	56797.3	1980
2.025	1.878	58.84	2.373	0.4822	1.135	1371	56798.3	2020
1.964	1.904	58.65	1.655	0.6421	0.952	1372	56799.3	2020
2.017	1.87	58.6	1.599	0.2224	0.945	1373	56800.3	1960
2.019	1.913	58.41	2.114	0.1191	1.079	1374	56801.3	1900
2.029	1.944	58.55	2.524	0.5593	1.133	1375	56802.3	1980
2.121	1.867	58.89	2.532	0.6528	1.133	1376	56803.3	1940
2.031	1.921	58.98	2.578	0.5796	1.121	1377	56804.3	1960
2.036	1.854	59.41	2.505	0.614	1.138	1378	56805.3	1980
2.054	1.929	59.65	2.429	0.4583	1.138	1379	56806.3	2020
1.979	1.917	60.12	2.49	0.5706	1.138	1380	56807.3	2100
2.118	1.868	60.41	2.38	0.5593	1.113	1381	56808.3	2040
2.132	1.93	60.7	2.3	0.6423	1.104	1382	56809.3	2020
1.956	1.878	60.51	1.453	0.729	0.928	1383	56810.3	2000
1.903	1.878	60.17	1.479	0.1279	0.913	1384	56811.3	2020
2	1.857	59.32	1.467	0.4158	0.935	1385	56812.3	1980
2.022	1.834	59.32	2.578	0.1665	1.128	1386	56813.3	2040
2.054	1.818	59.32	2.598	0.5481	1.13	1387	56814.3	2000
2.007	1.838	59.36	2.524	0.6084	1.14	1388	56815.3	1940
2.128	1.923	59.08	2.561	0.5042	1.116	1389	56816.3	2060
2.06	1.893	59.41	2.578	0.5757	1.138	1390	56817.3	2000
2.125	1.916	59.17	2.52	0.481	1.152	1391	56818.3	1980
1.966	1.904	59.51	2.485	0.5471	1.13	1392	56819.3	2040
2.13	1.902	59.93	2.551	0.5769	1.147	1393	56820.3	2020
2.167	1.863	60.7	4.033	0.3555	1.538	1394	56821.3	2060
2.04	1.838	61.6	4.05	0.384	1.648	1395	56822.3	2080
2.097	1.849	62.41	3.613	0.595	1.406	1396	56823.3	2140
1.916	1.952	62.93	2.874	0.5288	1.189	1397	56824.3	2120
2.147	1.974	62.41	1.113	0.7207	0.737	1398	56825.3	2120
1.995	2.021	62.12	0.752	0.8418	0.723	1399	56826.3	2080
2.09	1.928	61.46	0.796	0.2375	0.73	1400	56827.3	1980
1.944	1.955	60.65	1.367	0.1641	0.933	1401	56828.3	2120
1.956	1.961	60.22	1.309	0.6418	0.945	1402	56829.3	2080
2.041	1.926	60.36	1.516	0.5154	0.945	1403	56830.3	2100
2.086	1.91	60.17	1.47	0.4587	0.94	1404	56831.3	2060
2.051	1.951	60.12	1.509	0.4622	0.935	1405	56832.3	2060
2.07	1.892	59.98	1.392	0.6062	0.933	1406	56833.3	2060
1.88	1.89	59.89	1.392	0.6172	0.94	1407	56834.3	2020
2.035	1.806	59.55	1.423	0.3835	0.945	1408	56835.3	1980
2.025	1.837	59.32	1.348	0.5405	0.933	1409	56836.3	1960
2.042	1.881	59.55	1.567	0.272	0.972	1410	56837.3	2060
2.027	1.928	59.55	3.093	0.3479	1.289	1411	56838.3	2000
1.999	1.942	60.03	3.418	0.4983	1.316	1412	56839.3	2000
2.031	1.805	60.46	3.401	0.3098	1.321	1413	56840.3	2020
2.064	1.921	60.41	3.398	0.4407	1.331	1414	56841.3	2100
2.033	1.881	60.89	3.359	0.439	1.343	1415	56842.3	2060
2.137	1.857	60.7	3.142	0.5486	1.257	1416	56843.3	2060
2.007	1.798	60.79	3.123	0.5295	1.25	1417	56844.3	2080
2.064	1.784	60.6	3.13	0.5476	1.243	1418	56845.3	1980
2.004	1.745	60.51	3.149	0.5295	1.265	1419	56846.3	2040
2.1	1.77	60.65	3.247	0.5403	1.27	1420	56847.3	2080
2.067	1.755	60.55	3.406	0.332	1.333	1421	56848.3	2020
2.153	1.806	60.84	3.44	0.4561	1.335	1422	56849.3	2000
2.069	1.739	60.79	3.472	0.6516	1.323	1423	56850.3	2080
2.051	1.782	60.55	2.908	0.6936	1.191	1424	56851.3	2040
1.967	1.794	60.51	1.572	0.7603	0.942	1425	56852.3	2060
2.105	1.863	59.6	1.565	0.0989	0.945	1426	56853.3	1980
2.005	1.89	59.08	1.587	0.4346	0.95	1427	56854.3	2020
2.081	1.932	58.65	1.702	0.4805	0.947	1428	56855.3	1980
1.973	1.85	58.22	1.67	0.5149	0.952	1429	56856.3	1920
2.057	1.805	57.89	1.704	0.5745	0.942	1430	56857.3	1880
1.975	1.808	57.6	1.89	0.3955	1.04	1431	56858.3	1940
2.054	1.817	57.65	2.197	0.5813	1.045	1432	56859.3	1960
2.173	1.793	57.7	2.046	0.709	1.045	1433	56860.3	1900

2.053	1.774	57.7	2.083	0.6377	1.057	1434	56861.3	2020
2.064	1.766	57.51	2.08	0.4324	1.035	1435	56862.3	1920
2.096	1.785	57.51	2.092	0.4453	1.025	1436	56863.3	1920
2.007	1.754	57.6	2.197	0.5364	1.03	1437	56864.3	1900
2.026	1.791	57.79	2.085	0.4238	1.04	1438	56865.3	1960
2.055	1.803	57.6	1.631	0.5576	0.894	1439	56866.3	1940
2.059	1.781	57.13	1.438	0.3767	0.913	1440	56867.3	1980
2.058	1.789	56.98	1.47	0.2234	0.918	1441	56868.3	1940
2.008	1.803	56.89	1.523	0.4583	0.884	1442	56869.3	1940
1.897	1.746	56.65	1.675	0.4666	0.972	1443	56870.3	1920
2.14	1.772	56.51	2.832	0.0273	1.167	1444	56871.3	1900
2.046	1.795	57.22	3.23	0.4944	1.235	1445	56872.3	1940
2.005	1.804	57.46	2.937	0.5669	1.018	1446	56873.3	1920
2.08	1.83	57.17	1.147	0.8533	0.752	1447	56874.3	2020
2.032	1.81	56.79	1.414	0.2703	0.942	1448	56875.3	1960
2.113	1.879	56.6	1.553	0.676	0.952	1449	56876.3	2060
2.039	1.87	56.32	1.294	0.6003	0.735	1450	56877.3	1980
1.939	1.874	55.46	0.84	0.8457	0.713	1451	56878.3	1860
1.99	1.844	54.65	1.055	0.064	0.786	1452	56879.3	1840
2.164	1.835	54.17	1.516	0.2698	0.935	1453	56880.3	1920
2.109	1.818	53.7	2.476	0.5613	1.216	1454	56881.3	2020
2.032	1.829	54.17	3.574	0.4277	1.216	1455	56882.3	1820
2.096	1.852	54.22	2.8	0.7715	1.101	1456	56883.3	1860
1.975	1.821	54.51	3.516	0.4131	1.289	1457	56884.3	1840
2.059	1.886	54.41	1.509	0.6689	0.737	1458	56885.3	1840
2.024	1.86	54.22	0.889	0.7764	0.725	1459	56886.3	1820
2.032	1.831	54.03	0.942	0.3044	0.737	1460	56887.3	1660
2.001	1.865	52.56	0.945	0.1401	0.723	1461	56888.3	1660
2.016	1.84	51.56	1.013	0.4678	0.718	1462	56889.3	1620
2.014	1.875	51.41	3.118	0.2759	1.335	1463	56890.3	1880
2.053	1.9	51.98	2.573	0.6975	1.013	1464	56891.3	2180
2.115	1.89	52.13	1.06	0.6917	0.728	1465	56892.3	1780
1.931	1.902	52.36	3.745	0.2646	1.631	1466	56893.3	2180
2.105	1.916	53.36	2.502	0.5381	0.908	1467	56894.3	2460
2.071	1.819	53.08	1.272	0.3801	0.715	1468	56895.3	1920
1.866	2.003	51.7	1.003	0.7332	0.73	1469	56896.3	1720
2.003	1.852	50.41	1.135	0.5073	0.728	1470	56897.3	1640
2.024	1.867	49.46	1.062	0.1802	0.737	1471	56898.3	1640
2.167	1.906	49.37	2.939	0.4287	1.235	1472	56899.3	1600
2.076	1.895	49.56	3.457	0.3713	1.453	1473	56900.3	2280
2.19	1.965	50.65	4.143	0.3008	1.477	1474	56901.3	1860
2.061	1.98	51.36	4.106	0.5286	1.458	1475	56902.3	1700
2.098	1.92	52.13	4.253	0.4724	1.555	1476	56903.3	1920
2.01	1.899	53.13	4.363	0.5303	1.648	1477	56904.3	1760
2.083	1.876	53.94	4.382	0.4807	1.704	1478	56905.3	1760
2.139	1.91	54.7	4.126	0.571	1.47	1479	56906.3	1820
2.036	1.913	55.17	2.461	0.6892	0.759	1480	56907.3	1860
1.967	1.938	54.6	0.981	0.686	0.728	1481	56908.3	1880
2.058	1.916	53.94	0.977	0.7637	0.73	1482	56909.3	1680
1.971	1.913	53.65	1.072	0.094	0.723	1483	56910.3	1640
2.042	1.849	52.79	0.935	0.2747	0.74	1484	56911.3	1700
1.945	1.931	52.6	0.945	0.4028	0.742	1485	56912.3	1640
2.015	1.954	52.08	0.972	0.4265	0.735	1486	56913.3	1620
2.075	1.958	51.7	0.981	0.1421	0.718	1487	56914.3	1620
1.988	1.907	51.03	1.033	0.5012	0.728	1488	56915.3	1600
2.025	1.922	50.32	1.016	0.606	0.728	1489	56916.3	1640
2.059	1.961	50.17	1.052	0.3428	0.723	1490	56917.3	1620
2.061	1.943	49.56	1.138	0.4021	0.735	1491	56918.3	1600
1.988	1.93	49.08	1.123	0.7102	0.728	1492	56919.3	1580
1.961	1.878	48.89	1.077	0.1563	0.737	1493	56920.3	1560
1.984	1.966	48.27	1.704	0.0247	0.935	1494	56921.3	1680
2.008	1.869	48.18	1.851	0.8164	0.952	1495	56922.3	1840
2.133	1.814	48.13	1.282	0.5422	0.723	1496	56923.3	1660
1.875	1.846	47.65	1.084	0.4346	0.737	1497	56924.3	1580
2.015	1.894	47.46	1.101	0.1589	0.723	1498	56925.3	1540
1.976	1.948	47.03	1.165	0.4131	0.73	1499	56926.3	1540
1.994	1.948	46.7	1.079	0.4661	0.725	1500	56927.3	1560
1.968	2.021	46.41	1.133	0.6833	0.74	1501	56928.3	1480
1.949	2.013	46.03	1.157	0.4724	0.715	1502	56929.3	1480
2.068	1.911	45.79	1.179	0.2073	0.71	1503	56930.3	1480
2.012	1.955	45.6	1.182	0.3193	0.728	1504	56931.3	1460
2.023	1.926	44.99	1.191	0.49	0.713	1505	56932.3	1520

1.932	1.933	44.13	1.169	0.3464	0.713	1506	56933.3	1400
1.905	1.941	42.51	1.194	0.0723	0.725	1507	56934.3	1440
1.885	1.932	40.42	1.255	0.313	0.73	1508	56935.3	1340
1.877	1.926	38.03	1.372	0.2605	0.723	1509	56936.3	1240
1.875	1.924	34.8	1.34	0.4187	0.718	1510	56937.3	1260
1.841	1.827	31.23	1.426	0.7288	0.718	1511	56938.3	1220
1.88	1.732	26.8	1.433	0.5483	0.728	1512	56939.3	1260
1.743	1.759	21.28	1.699	0.0576	0.713	1513	56940.3	1100
1.764	1.827	15.37	1.626	0.0244	0.723	1514	56941.3	1020
1.826	1.888	10.66	2.009	0.2427	0.74	1515	56942.3	1040
1.808	1.926	5.38	1.86	0.8159	0.71	1516	56943.3	920
1.857	1.923	0.38	2.349	0.6228	0.737	1517	56944.3	820
2.001	1.899	0	2.202	0.051	0.718	1518	56945.3	760
2.045	1.895	0	2.236	0.0476	0.715	1519	56946.3	820
2.012	1.901	0	2.234	0.0642	0.725	1520	56947.3	740
2.036	1.907	-0.15	2.29	0.1008	0.72	1521	56948.3	740
2.051	1.906	-0.05	2.371	0.2268	0.723	1522	56949.3	760
2.014	1.905	-0.05	2.454	0.7278	0.73	1523	56950.3	740
2.023	1.901	-0.05	2.312	0.6313	0.723	1524	56951.3	760
2.027	1.908	-0.05	2.341	0.6172	0.723	1525	56952.3	740
2.039	1.9	-0.05	2.38	0.5125	0.73	1526	56953.3	740
2.032	1.89	-0.05	2.371	0.6599	0.73	1527	56954.3	720
2.02	1.902	-0.05	2.305	0.4004	0.725	1528	56955.3	740
2.031	1.901	0	2.3	0.6157	0.732	1529	56956.3	740
2.037	1.905	0	2.402	0.699	0.737	1530	56957.3	700
2.033	1.902	-0.05	2.388	0.5271	0.713	1531	56958.3	760
2.046	1.902	-0.05	2.324	0.2576	0.728	1532	56959.3	740
2.024	1.896	-0.05	2.358	0.3628	0.718	1533	56960.3	760
2.044	1.901	0.04	2.39	0.6772	0.73	1534	56961.3	720
2.035	1.897	0	2.336	0.533	0.742	1535	56962.3	780
2.026	1.911	-0.05	2.371	0.2373	0.728	1536	56963.3	740
2.058	1.9	-0.05	2.383	0.2686	0.72	1537	56964.3	940
2.02	1.902	-0.05	2.358	0.4001	0.737	1538	56965.3	740
2.025	1.906	0	2.332	0.241	0.725	1539	56966.3	700
2.042	1.899	-0.05	2.363	0.1763	0.72	1540	56967.3	720
2.055	1.906	-0.05	2.332	0.0889	0.725	1541	56968.3	780
2.036	1.906	0	2.351	0.6196	0.737	1542	56969.3	740
2.117	1.903	0.76	3.374	0.396	1.184	1543	56970.3	1000
2.302	1.89	6.23	3.416	0.2859	1.353	1544	56971.3	1800
2.235	1.892	10.85	2.81	0.5974	1.187	1545	56972.3	2100
2.137	1.9	13.18	2.712	0.5752	1.162	1546	56973.3	2120
2.13	1.91	14.85	3.098	0.3477	1.169	1547	56974.3	2120
2.118	1.967	16.47	3.562	0.5017	1.406	1548	56975.3	1820
2.192	2.008	18.9	3.789	0.1775	1.587	1549	56976.3	2220
2.223	2.014	22.47	4.263	0.2788	1.909	1550	56977.3	2460
2.224	1.922	26.04	4.199	0.4617	1.902	1551	56978.3	2680
2.197	1.857	29.04	3.743	0.4766	1.589	1552	56979.3	2780
2.137	1.866	30.47	2.341	0.4878	0.745	1553	56980.3	2280
2.045	1.857	30.51	1.865	0.4536	0.73	1554	56981.3	1680
1.96	1.87	28.61	1.614	0.6479	0.723	1555	56982.3	1480
1.891	1.843	25.85	1.541	0.4641	0.732	1556	56983.3	1220
1.865	1.856	21.9	1.812	0.0662	0.708	1557	56984.3	1020
1.854	2.015	17.52	1.75	0.0461	0.723	1558	56985.3	980
1.985	2.244	16.71	3.413	0.1738	1.211	1559	56986.3	1240
2.209	2.307	18.42	4.509	0.1626	2.183	1560	56987.3	2300
2.24	2.103	22.85	4.507	0.624	2.192	1561	56988.3	2780
2.238	1.996	26.51	3.691	0.575	1.582	1562	56989.3	2720
2.129	1.971	28.32	2.332	0.3684	0.74	1563	56990.3	2160
2.034	1.888	28.28	1.953	0.2988	0.728	1564	56991.3	1560
1.914	1.936	25.85	1.753	0.5374	0.725	1565	56992.3	1360
1.923	1.906	22.8	1.55	0.3743	0.728	1566	56993.3	1180
1.887	1.898	20.04	1.833	0.2693	0.728	1567	56994.3	1060
1.855	1.901	15.95	1.609	0.092	0.728	1568	56995.3	1040
1.803	1.903	11.04	1.978	0.301	0.728	1569	56996.3	980
1.777	1.912	5.71	2.012	0.8071	0.735	1570	56997.3	880
1.847	1.918	0.52	2.266	0.7859	0.73	1571	56998.3	820
2.007	1.906	0	2.41	0.4714	0.718	1572	56999.3	720
2.059	1.876	-0.05	2.385	0.2603	0.72	1573	57000.3	760
2.041	1.89	0	2.373	0.3176	0.728	1574	57001.3	720
2.054	1.883	0	2.39	0.3201	0.725	1575	57002.3	720
2.057	1.892	-0.05	2.322	0.3154	0.737	1576	57003.3	740
2.034	1.89	-0.1	2.354	0.5396	0.73	1577	57004.3	740

2.049	1.892	0	2.415	0.4172	0.725	1578	57005.3	740
2.038	1.898	-0.05	2.371	0.27	0.723	1579	57006.3	720
2.037	1.905	0	2.307	0.3511	0.73	1580	57007.3	740
2.041	1.895	0	2.332	0.1379	0.728	1581	57008.3	700
2.067	1.894	0	2.41	0.2454	0.728	1582	57009.3	720
2.049	1.878	-0.05	2.371	0.3728	0.735	1583	57010.3	760
2.04	1.909	0	2.385	0.585	0.723	1584	57011.3	720
2.04	1.891	0	2.327	0.3665	0.71	1585	57012.3	720
2.033	1.891	0	2.312	0.5444	0.723	1586	57013.3	720
2.045	1.887	-0.05	2.407	0.5637	0.728	1587	57014.3	720
2.214	1.89	2.42	3.54	0.2964	1.357	1588	57015.3	1360
2.407	1.867	10.04	4.541	0.2881	2.41	1589	57016.3	2360
2.386	1.863	17.8	4.604	0.7478	2.886	1590	57017.3	3060
2.322	1.868	23.9	3.855	0.7593	2.095	1591	57018.3	3640
2.242	1.908	27.66	3.875	0.4089	1.667	1592	57019.3	3320
2.148	1.879	30.08	3.704	0.3921	1.531	1593	57020.3	2560
2.148	1.911	31.89	3.699	0.3953	1.523	1594	57021.3	2300
2.138	1.87	33.42	3.56	0.4465	1.46	1595	57022.3	2420
2.118	1.877	34.94	3.499	0.522	1.448	1596	57023.3	2360
2.102	1.894	35.99	2.952	0.5449	1.182	1597	57024.3	2300
2.114	1.888	36.89	2.383	0.5325	1.011	1598	57025.3	2040
2.065	1.894	36.99	1.899	0.6399	0.796	1599	57026.3	2020
2.012	1.915	36.75	1.077	0.8149	0.72	1600	57027.3	1780
2.006	1.889	36.46	1.443	0.3894	0.728	1601	57028.3	1380
2.042	1.912	35.8	1.704	0.0215	0.72	1602	57029.3	1060
2.051	1.927	35.75	2.19	0.0266	0.925	1603	57030.3	1360
2.061	1.913	35.42	1.804	0.8406	0.913	1604	57031.3	1880
2.024	1.909	35.18	1.189	0.8	0.737	1605	57032.3	1740
2.012	1.888	35.08	1.438	0.4109	0.745	1606	57033.3	1400
2.039	1.912	34.75	1.58	0.022	0.732	1607	57034.3	1120
1.975	1.89	34.08	1.685	0.0259	0.723	1608	57035.3	1080
2.045	1.882	33.13	1.584	0.2368	0.728	1609	57036.3	1140
1.994	1.882	31.51	1.536	0.6846	0.73	1610	57037.3	1140
1.883	1.922	28.89	1.531	0.53	0.73	1611	57038.3	1120
1.908	1.904	25.85	1.624	0.3452	0.728	1612	57039.3	1100
1.959	1.917	24.18	1.575	0.2756	0.73	1613	57040.3	1080
2.022	1.913	22.9	1.511	0.6948	0.745	1614	57041.3	1080
2.019	1.883	22.42	1.65	0.6704	0.718	1615	57042.3	1100
2.044	1.878	22.42	2.356	0.1838	0.952	1616	57043.3	1200
2.091	1.877	22.42	2.446	0.5479	0.942	1617	57044.3	1440
2.049	1.891	23.23	2.632	0.54	1.003	1618	57045.3	1500
2.095	1.89	23.85	2.974	0.3274	1.138	1619	57046.3	1720
2.088	1.903	24.61	3.003	0.6257	1.14	1620	57047.3	1760
2.091	1.891	25.7	2.856	0.4846	1.125	1621	57048.3	1760
2.095	1.883	26.66	2.913	0.6323	1.14	1622	57049.3	1840
2.074	1.889	26.99	1.738	0.8064	0.735	1623	57050.3	1660
1.993	1.936	26.28	1.499	0.1519	0.745	1624	57051.3	1280
2.013	1.901	25.47	1.611	0.6235	0.72	1625	57052.3	1120
1.999	1.889	25.28	1.587	0.5044	0.732	1626	57053.3	1080
2.019	1.894	25.61	3.154	0.261	1.169	1627	57054.3	1420
2.069	1.906	26.37	3.035	0.658	1.194	1628	57055.3	1960
2.085	1.911	27.37	2.991	0.5503	1.14	1629	57056.3	1900
2.088	1.87	28.23	2.371	0.6948	0.842	1630	57057.3	1740
2.094	1.928	28.13	1.958	0.2019	0.789	1631	57058.3	1440
2.056	1.934	28.18	2.239	0.186	0.945	1632	57059.3	1420
2.095	1.882	28.37	3.032	0.0876	1.218	1633	57060.3	1680
2.094	1.878	29.51	3.059	0.3171	1.257	1634	57061.3	1980
2.056	1.895	30.23	2.813	0.6172	1.16	1635	57062.3	2000
2.014	1.888	30.66	1.577	0.8179	0.73	1636	57063.3	1780
2.052	1.897	30.42	1.296	0.2986	0.723	1637	57064.3	1440
2.064	1.865	30.42	1.587	0.0344	0.728	1638	57065.3	1200
2.026	1.895	29.85	1.577	0.0261	0.723	1639	57066.3	1180
2.041	1.883	29.75	1.526	0.0688	0.728	1640	57067.3	1100
2.024	1.899	29.32	1.465	0.2344	0.732	1641	57068.3	1160
1.962	1.905	27.42	1.545	0.2302	0.735	1642	57069.3	1120
1.898	1.96	24.8	1.604	0.7393	0.747	1643	57070.3	1080
1.947	1.944	22.99	1.609	0.6809	0.723	1644	57071.3	1040
2.061	1.873	22.9	1.621	0.3008	0.718	1645	57072.3	1060
2.043	1.815	22.71	1.628	0.1797	0.73	1646	57073.3	1080
2.067	1.816	23.04	2.373	0.4609	0.92	1647	57074.3	1220
2.077	1.85	23.23	2.288	0.6448	0.913	1648	57075.3	1460
2.049	1.823	23.47	2.141	0.5798	0.864	1649	57076.3	1420

2.056	1.849	23.47	2.1	0.177	0.796	1650	57077.3	1300
2.065	1.867	23.66	2.117	0.342	0.876	1651	57078.3	1160
2.079	1.849	24.18	3.484	0.0957	1.372	1652	57079.3	1660
2.133	1.817	25.85	3.484	0.5339	1.377	1653	57080.3	2140
2.119	1.836	26.94	2.051	0.7512	0.732	1654	57081.3	1880
2.041	1.82	26.99	1.616	0.1343	0.728	1655	57082.3	1420
2.038	1.844	26.56	1.394	0.2729	0.74	1656	57083.3	1340
2.017	1.856	25.66	1.484	0.6255	0.735	1657	57084.3	1180
1.977	1.855	24.61	1.599	0.5762	0.718	1658	57085.3	1100
2.005	1.859	24.23	1.633	0.075	0.723	1659	57086.3	1060
2.044	1.834	23.75	1.584	0.0654	0.708	1660	57087.3	1080
2.062	1.851	23.94	1.548	0.5015	0.72	1661	57088.3	1140
2.047	1.879	23.56	2.41	0.4465	0.969	1662	57089.3	1340
2.054	1.892	24.7	2.998	0.6077	1.14	1663	57090.3	1780
2.095	1.87	25.47	2.993	0.509	1.147	1664	57091.3	1840
2.103	1.899	26.32	2.9	0.3391	1.138	1665	57092.3	1860
2.079	1.875	27.04	2.844	0.5938	1.14	1666	57093.3	1940
2.098	1.872	27.89	1.831	0.6438	0.742	1667	57094.3	1760
2.031	1.869	27.7	1.46	0.3018	0.735	1668	57095.3	1380
2.045	1.873	27.85	1.538	0.262	0.752	1669	57096.3	1260
2.033	1.865	27.66	1.96	0.0322	0.925	1670	57097.3	1100
2.066	1.86	27.75	3.022	0.5305	1.226	1671	57098.3	1580
2.116	1.868	29.08	2.761	0.4893	0.918	1672	57099.3	2060
1.987	1.828	29.28	1.646	0.521	0.723	1673	57100.3	1500
2.021	1.834	28.7	1.399	0.6245	0.73	1674	57101.3	1420
2.024	1.87	28.28	1.589	0.3792	0.728	1675	57102.3	1240
2.003	1.864	27.8	1.692	0.0356	0.723	1676	57103.3	1020
1.99	1.86	27.37	1.692	0.1267	0.708	1677	57104.3	1040
2.035	1.847	26.8	1.68	0.3071	0.732	1678	57105.3	1100
2.004	1.844	26.51	1.572	0.3826	0.723	1679	57106.3	1060
2.079	1.86	25.99	1.56	0.397	0.725	1680	57107.3	1100
2.047	1.869	25.66	1.55	0.179	0.725	1681	57108.3	1160
1.993	1.832	25.32	1.538	0.4207	0.737	1682	57109.3	1160
2.049	1.863	24.75	2.368	0.6638	1.003	1683	57110.3	1260
2.065	1.793	25.42	2.625	0.5354	1.03	1684	57111.3	1700
2.039	1.849	25.94	1.733	0.8333	0.728	1685	57112.3	1520
2.035	1.878	25.75	1.516	0.1453	0.737	1686	57113.3	1240
1.996	1.887	25.51	1.694	0.0232	0.723	1687	57114.3	1080
2.009	1.846	24.42	1.616	0.0532	0.732	1688	57115.3	1020
2.023	1.891	23.51	1.572	0.4436	0.723	1689	57116.3	1080
1.999	1.871	23.09	1.57	0.418	0.73	1690	57117.3	1100
2.008	1.857	22.85	1.536	0.5667	0.725	1691	57118.3	1060
2.028	1.866	22.04	1.665	0.749	0.747	1692	57119.3	1040
2.026	1.838	21.71	1.672	0.5203	0.723	1693	57120.3	1020
2.033	1.847	21.52	1.672	0.1104	0.718	1694	57121.3	1060
2.045	1.892	21.13	1.743	0.519	0.747	1695	57122.3	1020
2.049	1.895	21.47	2.476	0.1951	0.962	1696	57123.3	1280
2.081	1.869	22.04	2.363	0.8372	0.933	1697	57124.3	1460
2.075	1.842	22.28	2.544	0.343	0.952	1698	57125.3	1360
2.035	1.855	22.42	1.809	0.342	0.723	1699	57126.3	1360
2.059	1.829	22.13	1.626	0.3645	0.718	1700	57127.3	1100
2.061	1.864	21.8	1.663	0.0781	0.762	1701	57128.3	1040
2.075	1.869	21.94	2.7	0.0645	1.021	1702	57129.3	1300
2.099	1.869	22.61	3.457	0.6558	1.306	1703	57130.3	1660
2.156	1.853	24.51	3.63	0.238	1.494	1704	57131.3	2160
2.162	1.882	26.23	3.394	0.5989	1.355	1705	57132.3	2220
2.12	1.904	27.89	3.167	0.5525	1.211	1706	57133.3	2200
2.059	1.869	28.32	1.858	0.6482	0.73	1707	57134.3	1880
2.014	1.868	28.47	1.462	0.5007	0.747	1708	57135.3	1460
2.004	1.887	27.99	1.558	0.5098	0.737	1709	57136.3	1220
2.034	1.877	27.8	1.56	0.0417	0.732	1710	57137.3	1080
2.015	1.855	27.7	1.545	0.0779	0.708	1711	57138.3	1060
2.045	1.863	27.32	1.558	0.6145	0.737	1712	57139.3	1160
2.023	1.889	27.18	2.144	0.3311	0.93	1713	57140.3	1240
2.059	1.866	27.23	2.229	0.6204	0.933	1714	57141.3	1560
2.047	1.876	27.42	2.217	0.5955	0.952	1715	57142.3	1540
2.063	1.875	27.56	2.214	0.6523	0.952	1716	57143.3	1580
2.047	1.847	27.94	2.502	0.4014	1.035	1717	57144.3	1660
2.021	1.896	28.28	2.544	0.4939	1.03	1718	57145.3	1660
2.037	1.883	28.99	2.507	0.6104	1.018	1719	57146.3	1700
2.117	1.87	29.13	2.778	0.4133	1.074	1720	57147.3	1720
2.087	1.856	29.89	2.62	0.4758	1.074	1721	57148.3	1800

2.065	1.849	30.47	2.258	0.5703	0.769	1722	57149.3	1820
2.025	1.852	30.27	1.36	0.6006	0.73	1723	57150.3	1480
2.03	1.862	30.08	1.494	0.0425	0.742	1724	57151.3	1280
2.019	1.895	29.18	1.646	0.0327	0.73	1725	57152.3	1040
1.98	1.898	27.8	1.531	0.0408	0.742	1726	57153.3	1060
2.022	1.844	26.42	1.592	0.6216	0.728	1727	57154.3	1140
2.005	1.866	25.23	1.545	0.6965	0.747	1728	57155.3	1120
1.971	1.862	24.85	1.589	0.2959	0.74	1729	57156.3	1080
2.04	1.865	24.61	1.514	0.6248	0.73	1730	57157.3	1140
1.908	1.889	22.99	1.606	0.2351	0.728	1731	57158.3	1140
1.821	1.878	18.52	1.765	0.499	0.737	1732	57159.3	1000
2.009	1.853	17.9	2.195	0.3899	0.955	1733	57160.3	1220
2.089	1.851	18.66	3.542	0.2085	1.45	1734	57161.3	1880
2.183	1.854	21.37	3.413	0.5559	1.409	1735	57162.3	2260
2.111	1.873	23.32	2.878	0.4563	1.189	1736	57163.3	2260
2.111	1.862	24.37	3.152	0.5583	1.14	1737	57164.3	1880
2.142	1.848	25.75	3.083	0.5378	1.118	1738	57165.3	1760
2.078	1.869	26.75	3.022	0.5337	1.133	1739	57166.3	1860
2.076	1.883	26.85	1.748	0.7407	0.72	1740	57167.3	1620
2.076	1.891	26.85	1.511	0.2065	0.73	1741	57168.3	1420
2.007	1.863	26.09	1.628	0.1287	0.73	1742	57169.3	1100
1.935	1.827	24.04	1.711	0.1348	0.735	1743	57170.3	1020
1.862	1.878	20.61	1.76	0.5454	0.73	1744	57171.3	1000
1.764	1.951	14.9	1.675	0.4607	0.73	1745	57172.3	1000
1.85	2.125	10.95	2.09	0.344	0.718	1746	57173.3	920
2.053	2.255	11.14	3.704	0.5225	1.409	1747	57174.3	1360
2.309	2.089	13.99	3.545	0.4631	1.531	1748	57175.3	2360
2.191	1.926	16.94	1.675	0.6819	0.735	1749	57176.3	2600
2.003	1.902	16.75	1.877	0.313	0.713	1750	57177.3	1520
1.872	1.97	14.09	1.763	0.0564	0.723	1751	57178.3	1200
1.864	2.098	10.42	2.068	0.6785	0.718	1752	57179.3	920
1.904	2.076	7.14	1.96	0.6606	0.723	1753	57180.3	860
2.029	2.01	6.57	1.846	0.1492	0.725	1754	57181.3	980
2.07	1.982	6.23	1.96	0.7463	0.745	1755	57182.3	980
2.046	1.982	6.19	2.004	0.4673	0.74	1756	57183.3	880
2.017	2.015	5.52	2.122	0.4019	0.728	1757	57184.3	920
1.947	1.951	3.76	2.134	0.3442	0.73	1758	57185.3	820
1.999	1.906	3	2.341	0.355	0.723	1759	57186.3	800

APPENDIX K

List of Acronyms Used

List of Acronyms Used

AC	alternating current, usually 110 volts
A/D	analog-to-digital, circuit board
A/F	air to fuel ratio by weight for the engine intake charge
ALDL	assembly line data link
ASCII	American Standard Code for Information Interchange
CO	carbon monoxide
CO_2	carbon dioxide
DC	direct current
DOS	disk operating system
DTE	data terminal equipment
ECU	electronic control unit, also referred to as "ECM," electronic control module
g	acceleration due to gravity, 32.15 ft/sec^2
HC	hydrocarbons
ISA	industry standard architecture, type of comupter bus
I/O	input/output
kPa	kilopascals, unit of pressure (100 kPa = 1 atmosphere)
LCD	liquid crystal display
LTC	Labtech Control
log	logarithm to the base 10
MAP	manifold absolute pressure, usually in kilopascals
MAT	manifold air temperature
O_2	oxygen
OEM	original equipment manufacturer
PPS	pulses per second
RAM	random access memory
ROM	read only memory
RPM	revolutions per minute
RS232	receive-send 232, serial data exchange protocol
SRAM	static RAM, type of memory that is battery-backed
SES	Service Engine Soon
TOD	time of day
TTL	transistor-transistor logic
TPS	throttle position sensor
TWC	three-way catalyst
UPS	uninterruptible power supply
°K	degrees Kelvin
°R	degrees Rankine

APPENDIX D

Addendum to VEHSIM User's Manual - Specifying Grade

In the original version of the VEHSIM/VEHSIME models, road grade could be prescribed only through the "ROUTE" command. In the ROUTE command, road grade (in %) can be prescribed as a function of distance over the route being simulated (MILEPOST). The original version of the program code only accommodated up to 100 points per route. To model driving schedule simulations of the 1992 Los Angeles Chase Car travel, it was necessary to address up to 5000 segments or points along a route. Road grade measurements were collected for <u>each</u> segment in this database. As a result, VEHSIM was modified to allow the prescription of road grade in either of two ways: (1) using the ROUTE command as described; or (2) by segment in the DRIVING (driving schedule) command. The code is set up so that any non-zero grade listed in the ROUTE command overrides segment-by-segment grade input through the DRIVING command. To run the model with segment-based grades, the grade data lines in the ROUTE command must be zeroed out.

(Although the use of "segment grade" (vs. route grade) was discussed in the March 1993 draft of the VEHSIM User's Manual, that version of the program <u>added</u> the segment and road grades if both were input with non-zero values. As stated above, in the latest version, non-zero route grade overrides non-zero segment grade.)

A second series of modifications was made to VEHSIM/VEHSIME to allow the user to perform a "Road Grade Distribution Analysis".

First, VEHSIM was re-written so that multiple model simulations can now be embedded within a single VEHSIM output file. This can be accomplished by using multiple SIMULATE commands in the VEHSIM Run Commands file. This use is illustrated below.

```
*USE  G-16.5      ROUTE
*PRINT UNITS      ENGINE      RPM          TORQUE      LB/HR
*LIMIT PRINT      SEGMENT
*USE  COCY2       CONVERTER
*USE  CODY2       CONVERTER
*USE  CN91G1      GEAR                     1
*USE  CN91G2      GEAR                     2
*USE  CN91G3      GEAR                     3
*USE  CN91G4      GEAR                     4
*USE  GEN3        SHIFT LOGIC
*USE  LFANA       ACCESSORY
*USE  CNY91V      VEHICLE
*USE  CNY91E      ENGINE          1        1 2 3 4
*USE  SQN081      DRIVING SCHEDULE
*TITLE      LA92 Route 081 for Typical P/W, -16.5% Constant Grade
*MODIFY           SHIFT          2.
*MODIFY           WEIGHT      3750.
*SIMULATE
*USE  G-15.5      ROUTE
*TITLE      LA92 Route 081 for Typical P/W, -15.5% Constant Grade
*SIMULATE
```

In this example, the first simulation is performed based on all the VEHSIM parts specified in the USE commands above the first SIMULATE command. The program then interprets any USE or MODIFY commands which follow the first simulate command as updates of the vehicle configuration modeled in the first simulation. The second simulate command then directs the program to perform a second simulation using this updated vehicle configuration. The VEHSIM output file for these run commands then contains segment-by-segment performance simulations for both simulations (in this case, a driving trace run at -16.5% grade followed by the same trace at -15.5% grade). Any number of simulations can be embedded into a single program execution in this manner.

In turn, the VEHSIME program was also modified to read and process these multiple-simulation outputs from VEHSIM. To perform the Road Grade Analysis, an additional prompt was added to VEHSIME inquiring if the user wants the model to read a "Road Grade Distribution" file. The Road Grade Distribution file is a small ASCII file called GRADIST.DAT which shows frequency of travel by grade "bin". (This file must be named GRADIST.DAT.) The GRADIST.DAT file used to perform the analysis of 1992 Los Angeles driving is shown below.

Sample Road Grade Distribution File

-13%	0.03
-12%	0.01
-11%	0.02
-10%	0.01
-9%	0.00
-8%	0.00
-7%	0.00
-6%	0.10
-5%	0.44
-4%	2.03
-3%	2.66
-2%	1.57
-1%	0.29
0%	84.94
1%	0.42
2%	1.40
3%	3.35
4%	1.52
5%	0.47
6%	0.36
7%	0.11
8%	0.12
9%	0.14
10%	0.03

The file contains two fields: the grade "bin" (in %, e.g., 5 = 5% grade) and the frequency of travel which occurs within that grade bin. The fields can be entered in an column range as long as they are separated by one or more spaces. Each record contains a single grade bin and frequency.

CARB LIBRARY
11333

When the Road Grade Distribution Analysis option is selected, VEHSIME also expects the user to specify as input, a multi-simulation VEHSIM output file such as described earlier. This file must contain simulations of a single "level" driving schedule over each of the constant grades specified in the GRADIST.DAT file. (If the list of simulated "driving schedule grades" in the VEHSIM output file does not match those grades listed in GRADIST.DAT, an error occurs.) When these two input are consistent, VEHSIME then reads and generates modal emissions for each simulated schedule-grade route, weights them together according to the frequencies in GRADIST.DAT and outputs the composite results.