AV-FR-87/649
AV Project No.: 91051

DESIGN AND TESTING OF THE SCAQS SAMPLER FOR THE SCAQS STUDY, 1987

Contract No.: A6-077-32

Prepared for

California Air Resources Board
P.O. Box 2815
Sacramento, CA 95812

By

Dennis Fitz and Judith Zwicker

AeroVironment Inc.
825 Myrtle Avenue
Monrovia, CA 91016

March 1988

DISCLAIMER

The statements and conclusions in this report are those of the contractor and not necessarily those of the California Air Resources Board. The mention of commercial products, their source or their use in connection with material reported herein is not to be construed as either an actual or implied endorsement of such products.

ABSTRACT

The principal objectives of this project were the design, construction and testing of an integrated gas and aerosol sampler in order to provide a set of nine equivalent samplers for the Southern California Air Quality Study (SCAQS).

The design initially proposed was similar to that built by Prof. Glen Cass of the California Institute of Technology. This design was modified in response to SCAQS requirements, potential problems noted by reviewers, and deficiencies observed during the prototype testing. The prototype sampler showed a precision of 3 percent to 7 percent. Significant losses of ammonia and nitric acid in the original prototype sampler were reduced to less than 5 percent in the final design. The side-by-side evaluation showed that the coefficients of variation of the mean concentrations averaged over all samplers for each of the 20 species determined were within the overall detection limits, indicating the equivalency of the samplers.

The final result was the delivery on time to the California Air Resources Board of nine fully tested and equivalent samplers which could be easily and quickly serviced in the field and that provided adequate sensitivity for the species to be determined.

ACKNOWLEDGMENTS

The design, construction, and testing of the SCAQS integrated sampler was made possible by a team of individuals whose valuable contributions are greatly appreciated. The sampler was designed with the invaluable cooperation of Professor Glen Cass of the California Institute of Technology. Many helpful suggestions on the design and testing of the prototype and final samplers were received from Dr. Richard Countess of Environmental Monitoring and Services, Inc. (EMSI), Dr. Bruce Appel of AIHL, Dr. Susanne Hering of UCLA, Dr. Kenneth Knapp of the EPA, Dr. Paul Roberts of Sonoma Technology Inc. (STI), and Drs. Douglas Lawson and Lowell Ashbaugh of the California Air Resources Board (CARB). The construction of the prototype and final samplers was mainly carried out at AeroVironment Headquarters in Monrovia, California, and was headed by Paul Pruss who was assisted by Jack Hardy, Nick Contreras, Eric Larson, and Steve Kerchner. In addition, Prof. Glen Cass of Caltech was involved in the construction of some of the parts. Assistance in the writing of protocols for testing, actual testing and training of technicians for operating the samplers both during testing and in the field was provided by Dr. K.C. Moon, Jerry Thelen and Alex Barnett. The protocols for sampler operation were written by Dave Pankratz. For operating the prototype and final samplers during the prototype testing and final side-by-side testing, we would like to acknowledge Sheryl Thurston, Cheryl Sandifer, Joanne Nowak, Peter Iskandar, Tom McDowell, John Conner, Keith Shannon, Joel Herr, Joanne Engelke, Ruth Barili, Jeff Gray, Minh Do, Hoang Ly, Xiaoming Li, Bong Mann Kim, Bill Reid, and Lisa Scheinost. We are especially grateful to Dr. Richard Countess of EMSI for coordinating the preparation and analysis of the filters used in the testing procedure. The analyses were overseen by Dr. Richard Countess at EMSI for mass and ion analyses, Barbara Wright at ERT for carbon analyses and ion quality assurance, Bob Kellogg at Northrup Services Inc. for XRF analyses, Dr. Thomas Cahill at UCD for b_{abs} analyses. The analysis of the test data was supported by K.C. Moon and Peter Iskandar. The final report production was carried out with the assistance of Rosalie Barili, Barbara McMurray, Linda Ferrington, Keri Bowman, Monica Sweeney, Lydia Chu, and reviewed by Anita Spiess. Our special thanks to Mike Chan for his guidance and suggestions.

Finally, we wish to acknowledge the support and guidance of California Air Resources Board.

This report was submitted in fulfillment of ARB Agreement No. A6-077-32: Southern California Air Quality Study (SCAQS) Sampler by AeroVironment Inc. under the sponsorship of the California Air Resources Board. Work was completed as of 31 October 1987.

TABLE OF CONTENTS

		Page
Abstract		iii
Acknowledgements		v
List of Figures		ix
List of Tables		xi
Summary and Conclusions		xiii
1.	INTRODUCTION AND BACKGROUND	1-1
2.	SAMPLER DESIGN	2-1
2.1	Originally Proposed Design	2-1
2.2	Final Design	2-5
3.	PROTOTYPE TESTING	3-1
3.1	Precision Testing	3-1
3.2	PM-10 Manifold Testing	3-5
3.3	Penetration Testing of Carbonate Impregnated Filters	3-5
3.4	Penetration Testing of Oxalic-Acid- Impregnated Whatman 41 Filters	3-6
3.5	Nitric Acid and Ammonia Losses in the Sample Line and Denuder Efficiency Testing	3-6
4.	SIDE-BY-SIDE EVALUATION PROCEDURE	4-1
4.1	Detection Limits and Dynamic Blank Levels	4-2
4.2	Results of Collocated Sampling	4-2
5.	REFERENCES	5-1
APPENDICES		
A	Memoranda Related to SCAQS Schematics and Layout Drawings	A-1
	Memoranda Related to Protocols for Testing	A-17
	Protocol for SCAQS B Intensive Days	A-27
B	Results of ERT Quality Check on Ion Analysis	B-1

LIST OF FIGURES

		Page
2-1	Original design for a gas and size-selective aerosol sampling system	2-2
2-2	SCAQS sampler	2-6
2-3	SCAQS sampler flow diagram for final use at SCAQS B sites	2-7
2-4	Final layout of the components of the SCAQS sampler	2-9
3-1	SCAQS sampler flow diagram for prototype precision testing	3-2
3-2	Schematics of sampling methods used to evaluate losses of ammonia and nitric acid	3-7
3-3	Schematics of sampling methods used to test key sampler components	3-11
3-4	Schematic of sampling system to evaluate ammonia and ammonium losses	3-14
4-1	Mean percent deviations for data from the side-by-side evaluation - Component 1	4-7
4-2	Mean percent deviations for data from the side-by-side evaluation - Component 2	4-8
4-3	Mean percent deviations for data from the side-by-side evaluation - Component 3	4-9

LIST OF TABLES

		Page
1-1	Network measurements at Type B sites	1-2
3-1	Statistical summary of mass concentrations for SCAQS prototype precision testing ($\mu g/m^3$)	3-3
3-2	Dynamic blank value summary for SCAQS prototype precision testing (μg/filter)	3-4
3-3	Results of initial nitric acid and ammonia penetration tests (blank corrected)	3-9
3-4	Penetration of nitric acid through the glass inlet ($\mu g\ NO_3^-/m^3$)	3-10
3-5	Penetration of nitric acid through SCAQS sampler components ($\mu g/m^3\ NO_3^-$)	3-13
3-6	Testing ammonia penetration through SCAQS sampler components (blank corrected in NH_4^+ $\mu g/m^3$)	3-16
4-1	Data sampled and analyzed for the side-by-side evaluation	4-3
4-2	Detection limits for species collected by SCAQS gas and aerosol sampler	4-4
4-3	Period K - dynamic blank summary (μg/filter - lab blanks subtracted)	4-5
4-4	Summary of SCAQS side-by-side evaluation	4-6
4-5	Line 1: Total nitrate on nylon filters ($\mu g\ NO_3^-/m^3$)	4-11
4-6	Line 2: SO_2 by $SO_4^=$ analysis of carbonate impregnated filters ($\mu g\ SO_4^=/m^3$)	4-12
4-7	Line 3: PM-2.5 nitrate on nylon filters ($\mu g\ NO_3^-/m^3$)	4-13
4-8	Line 4: Nitric acid and PM-2.5 nitrate on nylon filters ($\mu g\ NO_3^-/m^3$)	4-14
4-9	Line 5A: NH_3 as NH_4^+ on oxalic acid coated denuder ($\mu g\ NH_4^+/m^3$)	4-15
4-10	Line 5B: PM-2.5 NH_4^+ on oxalic acid impregnated filter ($\mu g\ NH_4^+/m^3$)	4-16
4-11	Line 6: b_{abs} data ($10^6 m^{-1}$)	4-17
4-12	Line 7: PM-2.5 carbon on quartz filters ($\mu g\ C/m^3$)	4-18
4-13	Line 8: PM-2.5 mass ($\mu g/m^3$)	4-19
4-14	Line 8: PM-2.5 S on Teflon filter by XRF ($\mu g\ S/m^3$)	4-20
4-15	Line 9: PM-2.5 Cl^- on Teflon filters ($\mu g\ Cl^-/m^3$)	4-21
4-16	Line 9: PM-2.5 $SO_4^=$ on Teflon filters ($\mu g\ SO_4^=/m^3$)	4-22
4-17	Line 9B: Artifact organic carbon on quartz filters ($\mu g\ C/m^3$)	4-23
4-18	Line 10: PM-10 carbon on quartz filters ($\mu g\ C/m^3$)	4-24
4-19	Line 11: PM-10 mass ($\mu g/m^3$)	4-25
4-20	Line 11: PM-10 Fe on Teflon filter by XRF ($\mu g/m^3$)	4-26
4-21	Line 12: PM-10 $SO_4^=$ by IC on Teflon filters ($\mu g/m^3$)	4-27
4-22	Line 12: PM-10 Cl^- on Teflon filters ($\mu g/m^3$)	4-28

SUMMARY AND CONCLUSIONS

The Southern California Air Quality Study (SCAQS) required an integrated sampler that could sample gases, PM-2.5 and PM-10 particles, could have the sampling media changed every four hours in as short a time as possible for consistency, and could be operated by one technician who would also be responsible for the other sampling at the site. It was decided to build rather than buy the integrated sampler since no single available instrument was capable of all the measurements required or of the ease of operation needed. A suggested basis for this sampler was that designed at the California Institute of Technology, versions of which have been deployed in Southern California. The original design was modified in response to SCAQS requirements and potential problems noted by reviewers, and to rectify deficiencies observed during the prototype testing. The end result of the program was a quality sampler, easily and quickly serviced in the field, that provided adequate sensitivity for the parameters to be measured. The fully tested product was delivered on time to the SCAQS monitoring sites.

A summary of the testing and results of the testing follows.

o Prototype Testing

In order to evaluate collection precision, which reflects uncertainties in the flow and inequality of the sample streams, the sampler was operated for 16 intervals (including 4 intervals for blanks). The sampler as used in this testing is shown in Figure 3-1. All sample lines except Line 5 were sampled with ringed Teflon filters, which were analyzed gravimetrically for mass. Sample Line 5 was excepted from this testing and used to determine ammonia-collection efficiency. The coefficients of variation of the mean values over the 12 tests give an indication of the mean collection precision. The mass loadings on the filters sampled in Line 6 with a nominal flow of 2 lpm were near or below the blank values for all tests. The results for the field blank corrected data are summarized below:

- Total inlet with average blanks subtracted (Lines 1 and 2): 7%.

- Low capacity (nominal flow 10 lpm - Lines 3 and 4)
  PM-2.5 inlet: 4%.

- High capacity (nominal flow 37 lpm - Lines 7, 8 and 9)
  PM-2.5 inlet: 3%.

- High capacity (nominal flow 38 lpm - Lines 10, 11 and 12)
  PM-10 inlet: 3%.

- Mean low capacity PM-2.5 inlet and mean high capacity PM-2.5 inlet taking mean blank values into account: 6%.

- Ratio of mean PM-2.5 (Lines 7, 8 and 9) mass to mean total (Lines 1 and 2) mass is 0.41 and the ratio of mean PM-10 (9, 10, 11) to mean total mass is 0.81 which are typical of urban air.

- The overall detection limits and precision agree with those obtained for sampler reproducibility in the side-by-side evaluation of 10 samplers.

- The sample loadings were below the overall detection limits for 4 of the 12 tests for the low capacity PM-2.5 inlet and 1 of the 12 for the high capacity PM-2.5 inlet.

o **PM-10 Manifold Testing**

The manifold which split the PM-10 flow evenly between three lines was evaluated to determine that no particles were being lost. The mean of the three PM-10 mass concentrations from the lines following the manifold (Lines 10, 11, and 12) was compared with the mean of the masses collected with the single collocated PM-10 inlet sampling with three times the flow. The coefficient of variation of the two was less than 1 percent.

o **Penetration Testing of Carbonate-Impregnated Filters**

The flow for Line 2 was lowered from 35 lpm to 22 lpm since SO_2 was shown to penetrate the sodium carbonate-impregnated Whatman 541 filter at 35 lpm during the precision testing but not significantly ($\leq$ 5%) at 22 lpm during laboratory testing by EMSI.

o **Penetration of Whatman-41 Oxalic-Acid-Impregnated Filters**

The Whatman-41 filter media were replaced by quartz fiber filters for oxalic acid impregnation for NH_3 collection since the Whatman-41 filters showed poor collection efficiency during the precision testing.

o **Nitric Acid Loss Testing**

The prototype sampler was tested to check for loss of nitric acid. The following are the results:

- Considerable nitric acid (81%) was lost in the original design.

- The loss was found to be mostly in the stilling chamber (74%) and to some extent the glass inlet.

- The final design with the stilling chamber replaced by a Teflon manifold and the glass inlet replaced with a Teflon inlet showed a greatly reduced loss of 5%.

o **Ammonia Losses and Denuder Efficiency**

The prototype sampler was tested for losses of ammonia and for denuder efficiency. The results and changes were as follows:

- Initial losses of ammonia were 56%, denuder efficiency was 84% and ammonia collection was 90%.

- In the final sampler the stilling chamber was replaced with a Teflon manifold, the HF etching of the denuder tube was increased from 30 seconds to 5 minutes, and the Whatman-41 filter substrate was replaced with quartz fiber filters. The results were no significant loss of ammonia, no significant penetration of the filters and a denuder efficiency of 90% or better.

o **Side-by-Side Evaluation of Ten Samplers**

The ten samplers built by AeroVironment (nine for the SCAQS and one for General Motors Research Laboratory) were tested side by side to determine their comparability. Because of unusually clean air during the evaluation, the loadings on the low flow filters were sometimes near or below the overall detection limits. However, even under these strained conditions the samplers showed very good agreement as is summarized below:

- When the loadings were greater than four times the overall detection limit, the coefficients of variation were between 5% and 10%. The typical ambient concentrations for the particulate species determined were between four and twenty times the overall detection limit. For very low loadings, the coefficients of variation were generally less than the percent overall detection limit (detection limit for species/mean concentration of species x 100%).

- For each of the ten samplers, the concentrations of twenty species were determined for four to six sampling periods. Only one species for one sampler showed any significant bias over the sampling periods. The ammonia concentrations from the denuder (5A) for Sampler 5 were consistently between 1.5 and 2 times the mean for all samplers for each of the six periods during which measurements were made. This deviation was most likely due to a loose or missing ferrule at one of the denuder tube connections. This sampler was refitted and checked for leaks before being sent to the field. The technicians were further trained in the insertion of the ferrules and in the importance of checking the ferrules at each denuder change.

- The high variability in the ammonia and ammonium ion data from Line 5 is probably also due to ferrule problems with randomly misplaced ferrules. The additional training on the importance of the ferrules should have corrected this problem.

- The large variability of the blanks for the b_{abs} measurements is being corrected by the preanalysis of all filters before going into the field.

The results of this testing and consequent changes in the design and protocol were the presentation of a set of samplers that provided adequate precision and ease of use to fulfill the requirements of the study.

1. INTRODUCTION AND BACKGROUND

In recent years in California, the composition and spatial distribution of air pollutant emissions have changed substantially, and several new classes of pollutants have gained the public's attention. In the next few years, many difficult regulatory issues relating to these changes will confront the California Air Resources Board (CARB). Resolution of these issues and development of effective control strategies to ameliorate California's air quality problems will require a better understanding of the relationships among the sources, receptors, and effects of the pollutants in question. This understanding can only be developed through measurement, data analysis, and modeling in an iterative fashion. Design and evaluation of alternative control strategies must be done using models that incorporate our best understanding of the above relationships.

The Southern California Air Quality Study (SCAQS) has been designed to construct a database that could be used to evaluate and improve air quality simulation models in order to provide CARB with the necessary understanding to make effective regulatory decisions. The program is described in detail in the program plan (Sonoma Technologies Inc, 1986). The database needs to contain measurements of oxidants, fine and coarse paticles (PM-2.5 and PM-10), and toxic air contaminants, as well as meteorological and visibility parameters, at a number of sites across the South Coast Air Basin. Since it is impractical to measure all species at all sites, the sites have been classified as Type A, B or C depending on the completeness of the measurements at the site. The Type C sites consist of existing monitoring stations. The nine Type B sites have the basic instrumentation used at the Type C sites with additional instrumentation for the collection of gas and aerosol species to be run by trained technicians. The two Type A sites have sophisticated instrumentation run by research personnel.

Table 1-1 lists the species to be determined at the Type B sites along with the sampling times and methods of analysis. Measurements such as peroxyacetyl nitrate, hydrocarbon speciation and hydrogen peroxide were best made with specialized individual instruments. However, to sample gases and PM-2.5 and PM-10 particles, the Type B sites required an integrated sampler whose sampling

TABLE 1-1. Network measurements at Type B sites (Source: Sonoma Technology Inc., 1986).

Observable	Duration	No. per site-day	Potential meas. method	Ambient concentrations typical	Ambient concentrations range	Units*	Lower quantifiable limit	Precision**
METEOROLOGY - AQMD								
Wind speed	Cont.	24	Cup anemometer	3	0-20	m/sec	0.25	0.25
Wind direction	Cont.	24	Vane	IA	0-360	degrees	IA	3
Temperature	Cont.	24	Thermistor	IA	0-45	degrees C	IA	0.5
Dew point	Cont.	4	Psychrometer	IA	-10-25	degrees C	IA	0.5
UV radiation	Cont.	24	UV pyranometer	IA		eppleys	IA	
GASES - AQMD								
O3	Cont.	24	UV absorption	30	1-400	ppb	10	15%
NO	Cont.	24	Chemiluminescence	30	0-300	ppb	10	15%
NOx	Cont.	24	Chemiluminescence	50	0-350	ppb	10	15%
SO2	Cont.	24	Pulsed fluores.	6	0-320	ppb	10	15%
CO	Cont.	24	NDIR	2	0.5-30	ppm	0.5	15%
GASES - SCAQS								
SO2	4 hr.	6	Impreg. filter	6	0-320	ppb	<0.1	7%
NH3	4 hr.	6	Denuder tube	5	0-150	ppb	0.1	10%
HNO3	4 hr.	6	Denuder method		0-25	ppb	0.1	10%
Carbonyls	4 hr.	3	DNPH filter	3-7	1-30 (HCHO)	ppb	0.05	10%
C1-C10 HC	4 hr.	3	Can. or abs & GC/F			ppbC	0.1-1ea.	10%
PAN	1 hr.	24	GC/EC	5-10	0-50	ppb	0.5	15%
H2O2	1 hr.	24	POHPAA-enzyme	5 (est.)		ppb	0.5	3%
AEROSOL PHYSICAL PROPERTIES								
Size dist.	Cont.	24	OPC	IA	IA	IA		
Size dist.	Cont.	24	EAA	IA	IA	IA	Resolves diameter ratio of 1.6	
Light scattering	Cont.	24	Integrating nephelometer	350	15-1500	Mm-1	10	10%
Data acquisition	Cont.	--	Micro computer	IA	IA	IA	IA	5mV for 10V f.s.
AEROSOL CHEMISTRY								
Total/fine:	4 hr.	6	Size selective sampler					
Mass			Grav. or beta	40	5-220	ug/m3		7%
SO4=			IC or AC	5	0.5-25	ug/m3		7%
NO3-			IC or AC	8	0.5-30	ug/m3		7%
NH4+			IC or AC			ug/m3		7%
H+			Gran titration					
Trace elements			EDXRF or WDXRF			ng/m3	see separate table	
Elemental C			Ref. or therm.			ug/m3		
Total C			Therm.			ug/m3		
PM-10 (AQMD)	4 hr.	6	SSI-HiVol					
Mass			Grav.	50	5-250	ug/m3		7%
SO4=			AC	5	0.5-25	ug/m3		7%
NO3-			AC	8	0.5-30	ug/m3		7%
TSP (AQMD)	24 hr.	1	HiVol					
Mass			Grav.	80	10-450	ug/m3		7%
SO4=			IC or AC	9	0.5-30	ug/m3		7%
NO3-			IC or AC	12	0.5-50	ug/m3		7%
Pb			AA or EDXRF	0.2	0-2	ug/m3		
SIZE RESOLVED CHEMISTRY			UDI					
SO4=	4 hr.	6	IC or AC			ug/m3	0.4***	7%
NO3-	4 hr.	6	IC or AC			ug/m3	0.8***	7%
NH4+	4 hr.	6	IC or AC			ug/m3	0.8***	7%
Elemental carbon	4 hr.	6	Ref. or therm.			ug/m3		
Total carbon	4 hr.	6	Therm.			ug/m3		

* Units apply to both ambient concentrations and the lower quantifiable limit.
** Precision for values well above the lower quantifiable limit.
*** ug/m3 per stage

media could be changed quickly every four hours. It also needed to be operable by a single technician who would also be responsible for the other sampling at the site. The program plan recommended building rather than buying the integrated sampler, since no single instrument was available and capable of all the measurements required or offered the ease of operation needed. A suggested basis for this sampler was that designed at the California Institute of Technology, versions of which have been tested and deployed in Southern California. This report is concerned with the program to design, construct and test this integrated sampler (the SCAQS sampler).

The program was divided into six components:

1. Sampler design
2. Prototype construction
3. Prototype testing
4. Design revision
5. Construction of eight more samplers for SCAQS and one for the General Motors Research Laboratory
6. Side-by-side comparison testing of all ten samplers

The end result of the program was a set of equivalent samplers easily and quickly serviced in the field that provided adequate sensitivity for the parameters to be measured. The fully tested product was delivered on time to the SCAQS monitoring sites.

2. SAMPLER DESIGN

The sampler was designed to take into account the criteria listed in the Program Plan:

- To sample the gases and particles listed in Table 2-1
- To be able to be run by one technician
- To have the sample media changed easily and quickly

2.1 Originally Proposed Design

A schematic design of a suitable sampler was made with the assistance of Professor Glen Cass of the California Institute of Technology. This design was submitted with the original proposal and is shown in Figure 2-1 from which the final design (Figure 2-3) evolved. It consisted of three components each of which is run off a separate pump to minimize time loss when reloading filters and data loss from individual pump failures. Below is a description of the three components of the original design.

- Component 1: To determine gaseous concentrations

  Following a low-flow-rate cyclone, the flow is divided between three lines for the determination of nitric acid and ammonia gases (along with PM-2.5 nitrate and ammonium). The first and second lines contain nylon filters, which quantitatively trap nitrate and nitric acid. In the second line, the nylon filter is preceded by a magnesium-oxide-coated, multi-tube denuder to remove vapor-phase nitric acid. Thus, the vapor-phase nitric acid is determined by the difference between the nitrate measured on the nylon filters in Lines 1 and 2 (Shaw et al., 1982). The nitrate on the filter below the denuder is a measure of PM-2.5 nitrate. Line 3 contains an oxalic acid-coated denuder that collects ammonia gas and is extracted and analyzed for ammonium ion (Ferm, 1979). Below the ammonia denuder, an oxalic acid-impregnated filter quantitatively traps PM-2.5 particulate ammonium.

TABLE 2-1. Measurements at Type B sites to be made by the proposed "SCAQS" sampler

Observable	Duration (hrs)	Number Per Day	Method	Precision (%)*
PM-10/PM-2.5				
Mass	4	6	Gravimetric	7
$SO_4^=$	4	6	IC	7
NO_3^-	4	6	IC	7
NH_4^+	4	6	Colorimetric	7
Trace Elements	4	6	XRF	Varies
Organic Carbon	4	6	Thermal	7
Elemental Carbon	4	6	Combustion	7
Gases				
SO_2	4	6	Impreg. Filter	7
NH_3	4	6	Impreg. Denuder	10
HNO_3	4	6	Denuder Difference	10

*Precision for values well above the lower quantifiable limit.

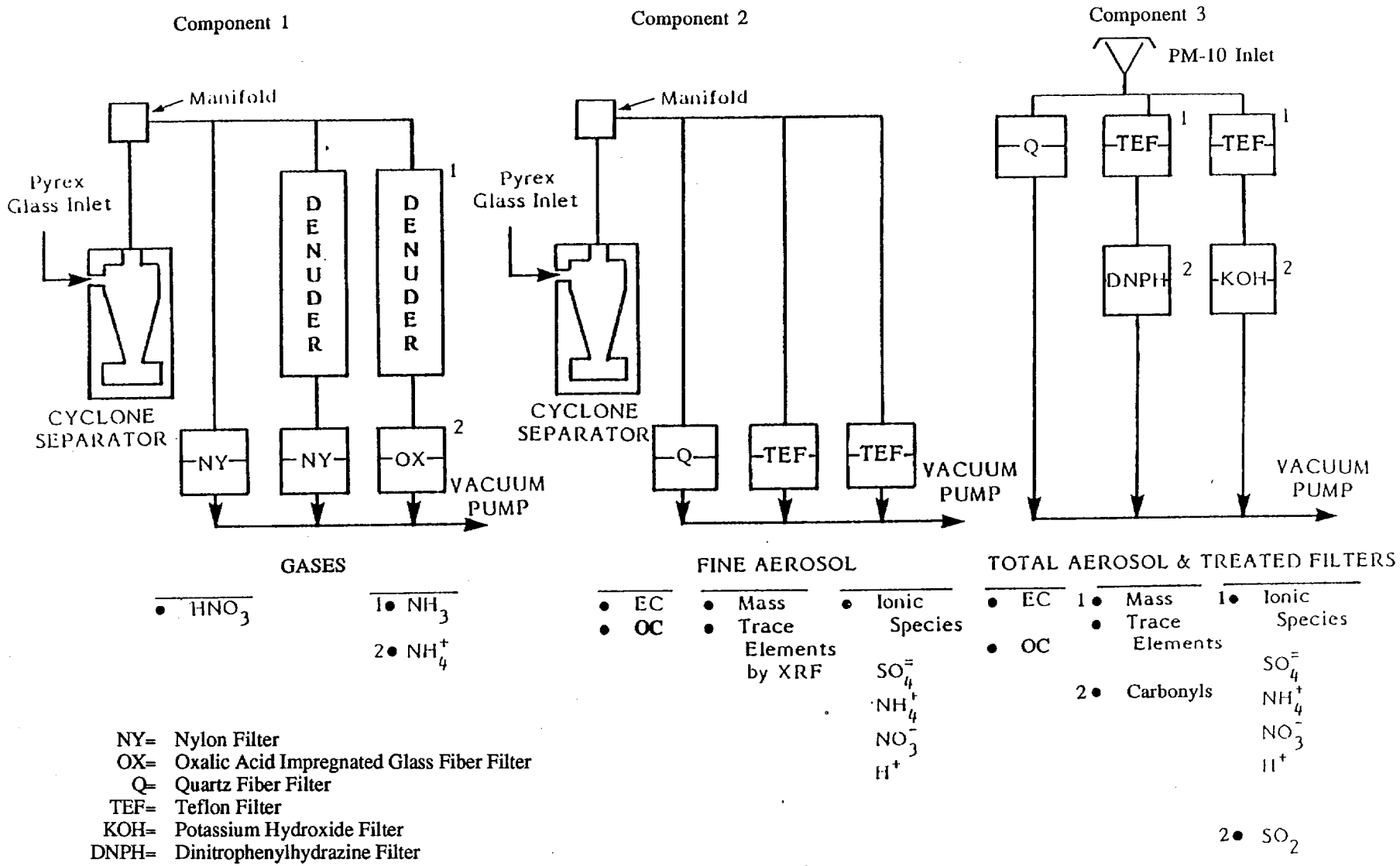

NY= Nylon Filter
OX= Oxalic Acid Impregnated Glass Fiber Filter
Q= Quartz Fiber Filter
TEF= Teflon Filter
KOH= Potassium Hydroxide Filter
DNPH= Dinitrophenylhydrazine Filter

FIGURE 2-1. Original design for a gas and size-selective aerosol sampling system.

- Component 2: To determine fine particulate composition.

  A high flow rate PM-2.5 cyclone is used to provide the necessary mass collection and analytical sensitivity for collecting PM-2.5 particles. The flow following the cyclone is split evenly between three lines. The first contains a quartz fiber filter suitable for carbon analysis by a volatilization/combustion technique. The other two lines contain polyolefin-ringed Teflon filters. One of these is tared and used for mass determination and then analyzed for elements by X-ray fluorescence (XRF); the other is extracted and analyzed for ionic species by ion chromatography and colorimetry.

- Component 3: To determine PM-10 particulate composition.

  The flow following a PM-10 inlet is split evenly between three lines as in Component 2. The quartz and Teflon filters are analyzed in the same way. However, the Teflon filters of the last two lines are followed by chemically treated filters to collect gaseous components. A dinitrophenylhydrazine-impregnated (DNPH) quartz filter is used to collect carbonyls for high pressure liquid chromatography (HPLC) analysis while sulfur dioxide is trapped by a potassium hydroxide-impregnated (KOH) quartz filter to be analyzed by ion chromatography as sulfate. This technique of sulfur dioxide (SO_2) determination is much more sensitive than that of the continuous analyzer it was used to supplement.

The sampler hardware and layout was designed so that it could be easily operated by one technician. Flow through filters was controlled by critical orifices. Two sets of filter holders were provided with quick-connect type fittings so that the sampling media could be changed quickly and easily to minimize time lost between sequentially taken samples. One set was to contain the sampled filters and the other, unexposed filters.

2.2 Final Design

Figure 2-2 shows a photograph of the sampler. Figure 2-3 shows the final sampler design schematically. This final design differs somewhat from that given in the original proposal.

The design went through several iterations and changes were made based on recommendations of the SCAQS planning committee and other consultants and on the results of the testing. After each iteration, schematic and layout drawings were circulated for review. These are included in Appendix A.

The DNPH filter holder was removed since carbonyl collection was conducted with a separate instrument. The KOH-impregnated filter was changed to a potassium-carbonate-impregnated filter and switched to an open-face holder to ensure that SO_2 was not lost in the sampling equipment; a separate Teflon front filter was used to remove particulate sulfate. An open-face nylon filter was added to collect particulate nitrate greater than 10 μm diameter and to set an upper limit to nitric acid which may be lost in the cyclone inlet system. A Nuclepore filter was added to the PM-2.5 sampling manifold for determining b_{ap} (extinction due to particulate absorption). A quartz back-up filter was added behind the PM-2.5 Teflon filter in order to estimate the amount of artifact organic carbon collected. Teflon filters were added in front of the nylon filters for lines 1, 3 and 4 because the nylon filters became plugged in the field by high particulate loadings.

The glass inlet for the PM-2.5 cyclone in Component 1 (see Figure 2-1) was replaced by an FEP Teflon one and the stilling chamber by a Teflon manifold to reduce losses of nitric acid and ammonia in the sampler. The etching of the NH_3 denuder was increased from 30 seconds to 5 minutes and quartz fiber filters used instead of the Whatman-41 for NH_3 collection. An inlet for the PM-2.5 fine aerosol (Component 2) was not necessary since the cyclone was inside the bucket but outside of the shelter and thus exposed to ambient air; only a stilling chamber was needed.

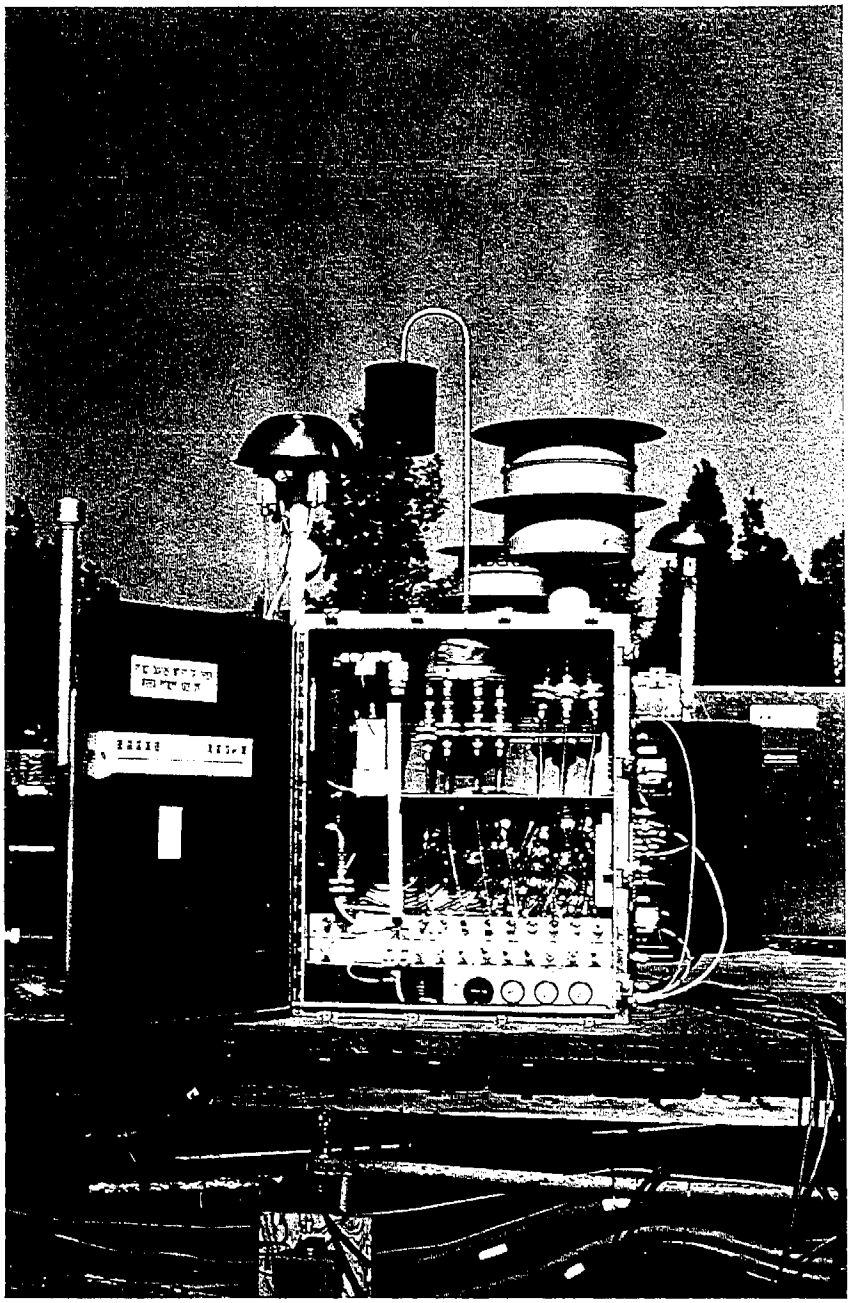

FIGURE 2-2. SCAQS sampler.

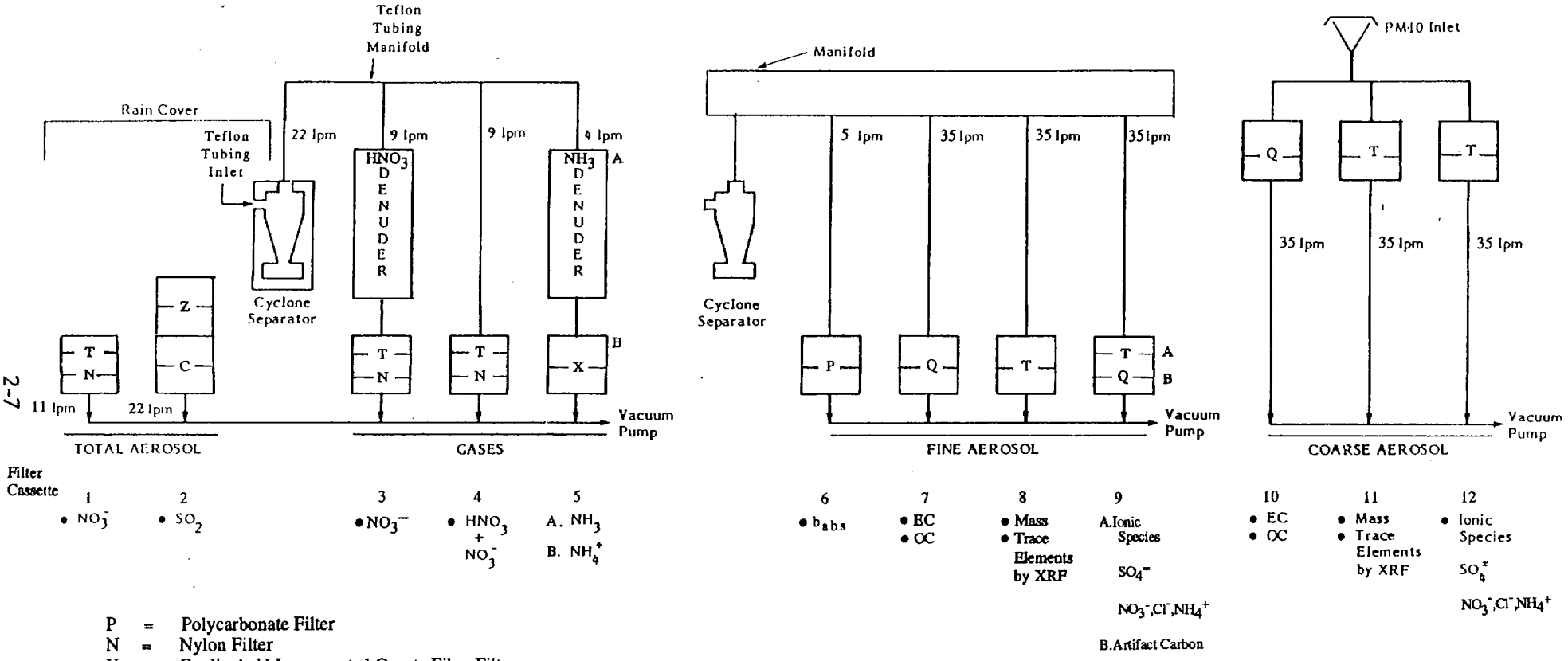

P = Polycarbonate Filter
N = Nylon Filter
X = Oxalic Acid Impregnated Quartz Fiber Filter
Q = Quartz Fiber Filter
T = (Teflo) Teflon Filter
C = Carbonate Impregnated Cellulose Filter
Z = (Zefluor) Teflon Filter

FIGURE 2-3. SCAQS sampler flow diagram for final use at SCAQS B Sites.

o **Hardware Description**

Figure 2-4 shows the final layout of the components of the sampler. All in-line filter holders use Ultra-Torr "o"-ring sealed fittings to the sampling port to provide an easily changed, leak-free connection that does not perturb the air flow. This fitting also allowed the operator to connect the filter holder to a rotameter to measure flow rates. Filter holders are attached to a keyed male quick-connect fitting via a flexible hose. To start sampling, this quick-connect is joined to the corresponding bulkhead-mounted female quick-connect, which is attached to the appropriate critical orifice on the vacuum manifold. The keyed quick-connects are built so that they cannot be inadvertantly mixed. For Line 5, the flow rate is measured with a rotameter without the ammonia denuder (5A) in place. The denuder is then installed using Ultra-Torr fittings which attach to the glass tubing on each end of the denuder.

o **Final Components (Figure 2-2)**

Component 1 -- Gases (Lines 1-5). Lines 1 and 2 were added under a rainshield to the original design. Teflon filters were added before the nylon filters in lines 1, 3 and 4 because the nylon filters became plugged with heavy particulate loadings.

Line 1: An open-face nylon filter and Teflon prefilter with a Teflon holder is used to collect total nitrate (including nitric acid). The nylon and Teflon filters are coextracted and analyzed for nitrate by ion chromatography.

Line 2: An open-face filter pack, consisting of a Zefluor Teflon filter and a sodium carbonate-impregnated Whatman 41 filter in a two-stage Teflon holder is used to collect sulfur dioxide. The carbonate-impregnated filter is analyzed for sulfate resulting from collection of sulfur dioxide. This filter pack was moved from Component 3 of the original design to avoid adsorption of SO_2 on the PM-10 inlet and the aluminum filter holder used in Line 12.

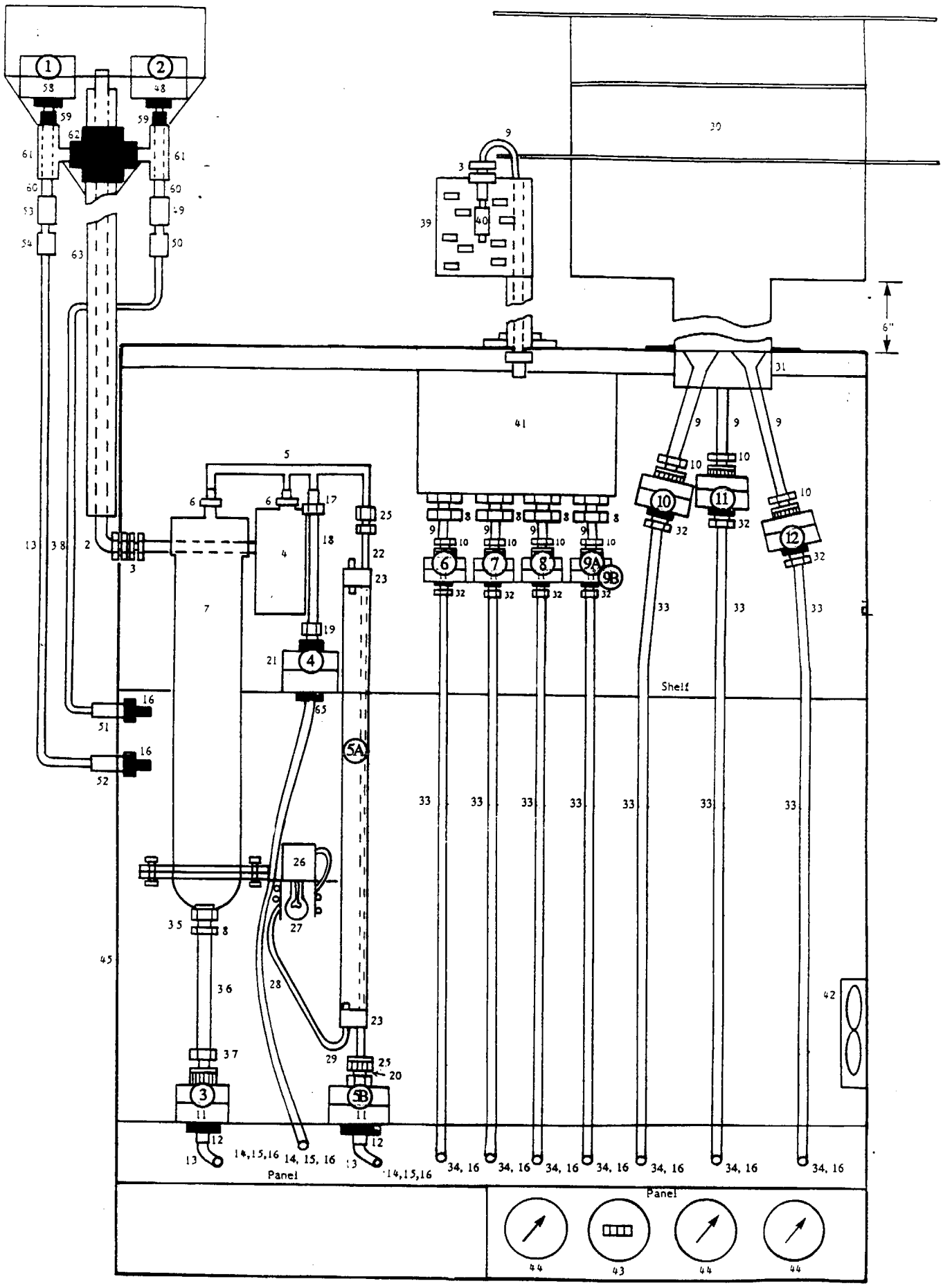

FIGURE 2-4. Final layout of the components of the SCAQS sampler.

87-788A

SCAQS Sampler Parts List

1. Stainless steel bucket with support
2. PFA Teflon tubing, 1/2" OD
3. Drilled-through 1/2" brass Swagelock bulkhead union (BR-810-61)
4. AIHL design cyclone (manufactured by Caltech), Teflon coated
5. PFA Teflon manifold
6. TFE Teflon adapter to 1/2-m OD
7. Nitric acid denuder (manufactured by Caltech)
8. 3/8" pipe x 1/2" tube male Swagelock adapter (BR-810-1-6)
9. Stainless steel tubing, 1/2" OD
10. 1/2" tube x 3/8" pipe Ultra-Torr male connector (BR-8-UT-1-6)
11. 47 mm filter holder, Al, (Gelman cat. number 1235)
12. 3/8" pipe x 1/4" tube Swagelock male elbow (BR-400-2-6)
13. 1/4" Bev-a-Line tubine
14. 1/4" tube x 1/4" pipe Swagelock bulkhead quick connector (BR-QC4-S-400 and QC4-B1400)
15. 1/4" tube x 1/4" male pipe adapter (BR-4-TA-1-4)
16. 1/4" pipe x 3/8" hose Swagelock female hose connector (BR-4-FHC-65)
17. 1/2" tube x 3/8" tube PFA Teflon reducing union
18. 3/8" Teflon tubing
19. 3/8" x 3/8" Ultra-Torr union, drilled through (BR-6-UT-6)
20. 1/4" x 3/8" bushing, BR
21. 45 mm Teflon filter holder (Savillek 6-47-6T)
22. 6 mm OD x 2' glass tube
23. Number 3 two-hole rubber stopper
24. 3/4" PVC pipe
25. 1/4" pipe x 1/4" tube Ultra-Torr male connector (BR-4-UT-1-4)
26. Aquarium pump
27. Light bulb with holder
28. 1/4" Tygon tubing
29. 5 mm OD glass "L"
30. 10 µm inlet (GMW-254-1)
31. Aluminum adapter plate (custom by AV)
32. 3/8" pipe x 3/8" tube Swagelock male connector (BR-600-1-6)
33. 3/8" Tygon tubing
34. 3/8" tube x 1/4" pipe Swagelock bulkhead quick connector (QC6-S-600 and QC6-B1-4PM)
35. 3/8" pipe x 3/8" tube Swagelock adapter
36. 3/8" copper tubing
37. 3/8" tube x 3/8" pipe Ultra-Torr male connector
38. 3/8" Bev-a-line
39. Inlet stilling chamber (AV design) with support
40. Sensidyne Model 240 cyclone
41. Stilling chamber
42. Fan

FIGURE 2-4. (continued)

43. Elapsed timer
44. Vacuum gauge
45. Aluminum cabinet 36" high x 12" deep x 30" wide
46. Removed
47. Removed
48. Two-stage open face 47 mm filter holder, 1/4" male pipe outlet (Savillex 0-472-4N)
49. 1/4" female pipe stem (BR-QC6-S-4PF)
50. 3/8" tube body (BR-QC6-B-600)
51. 3/8" tube x 1/4" male pipe bulkhead connector (BR-600-11-4)
52. 1/4" tube x 1/4" male pipe bulkhead connector (BR-400-11-4)
53. 1/4" female pipe stem (BR-QC4-S-4PF)
54. 1/4" tube QC body (BR-QC4-B-400)
55. 1/2" x 1/2" bulkhead union (BR-810-61) for vacuum line, not shown
56. 3/8" pipe x 1/2" tube male connector (BR-810-1-6) for vacuum system, not shown
57. 1/2" pipe x 1/2" tube bulkhead male connector (BR-810-1-6) for vacuum system, not shown
58. Teflon open face 47 mm filter holder 1/4" male pipe outlet (Savillex 0-471-4N)
59. Removed
60. Removed
61. 3/4" branch tee, PVC, with 1" x 3/4" bushing
62. 1" cross, PVC
63. 1" schedule 80, PVC pipe
64. Removed
65. 1/4" pipe x 1/4" tube female elbow (BR-400-8-4)

Not Shown

A Vacuum Manifolds -- consists of 3/4" PVC pipe "T"s connected by 3/4" PVC pipe with 1/2" pipe x 3/8" hose (BR-6-HC-1-4) connectors into arms of "T"s. The various orifices (BGI custom) screw into the hose connectors.

B Fluorescent Light

C Pump Box -- similar cabinet, attached to back of sampler cabinet with three 3/4-hp carbon vane pumps (W.W. Graingers 4Z337).

D Vacuum-actuated switch for each of the three vacuum manifolds, normally closed.

FIGURE 2-4. (continued)

Lines 3-5 are preceded by an AIHL PM-2.5 cyclone.

Line 3: Line 3 corresponds to Line 2 of the original design and is the same (see Section 2.1) except for the addition of a Teflon filter between the denuder and the nylon filter to avoid the plugging of the nylon filter observed in the field, and the replacement of the stilling chamber with Teflon manifolds and of the glass inlet with a Teflon one to reduce losses of nitric acid in the system as determined from testing (see Section 3.5).

Line 4: Line 4 is the same as Line 1 of the original design except for the addition of the Teflon prefilter as discussed for Line 3.

Line 5: Line 5 contains an oxalic-acid-coated denuder tube to collect ammonia gas followed by an in-line oxalic-acid-impregnated quartz filter to collect PM-2.5 ammonium. This is the same as the original design except for the use of a quartz rather than cellulose ester fiber filter (i.e., Whatman 41).

Component 2 -- PM-2.5 Aerosols. The four lines of Component 2 are preceded by a Sensidyne 240 PM-2.5 cyclone. This component is the same as the original Component 2 except for the order of the lines, the addition of Line 6 and the addition of a sheet metal mask for the filter holder on Line 7.

Line 6: An in-line Nuclepore polycarbonate filter in an aluminum holder is used to measure PM-2.5 b_{abs}.

Line 7: An in-line quartz filter in an aluminum holder is used to measure PM-2.5 elemental and organic carbon. A sheet metal "mask" (46 mm OD by 35 mm ID) placed over the top of the quartz filter ensures even particle distribution by clearly defining the collection area.

Line 8: An in-line, tared Teflon filter in an aluminum holder is used to determine PM-2.5 mass and trace elements.

Line 9: An in-line Teflon filter in an aluminum holder is used to measure PM-2.5 ionic species. A quartz filter directly behind the Teflon filter is used to estimate organic carbon artifact.

Component 3 -- PM-10 Aerosols. The three lines of Component 3 are the same as the original design except for the removal of the DNPH and KOH after filters and the addition of the sheet metal "mask" on Line 10.

Line 10: An in-line quartz filter in an aluminum holder is used to measure PM-10 elemental and organic carbon. Again, a sheet metal "mask" is used to define the particulate deposit more clearly.

Line 11: An in-line Teflon filter in an aluminum holder is used to measure PM-10 mass and trace elements.

Line 12: An in-line Teflon filter in an aluminum holder is used to measure PM-10 ionic species.

o **Packaging**

The components of the sampler are laid out in the 30"x 36"x 12" aluminum box as shown in Figure 2-4. Aluminum was chosen to reduce weight so that one person could set it up at the various monitoring sites. A high-capacity fan in combination with a screened louver is used to circulate air to prevent heat build-up. The temperature rise is approximately $1^{o}C$ with ambient temperatures of 33-$35^{o}C$.

The nitric acid denuder consists of ten standard wall glass tubes (6 mm OD) coated with a layer of magnesium carbonate. These tubes are held in a parallel spaced bundle with Teflon plugs. This assembly, in turn, is housed in a 2-1/2" PVC pipe with a cap on one end and a flange on the other to allow disassembly. Conical adapters are used at each end.

3. PROTOTYPE TESTING

The initial protocol for performance testing was circulated in a memo dated February 6, 1987. After comments were received, a finalized protocol was issued on March 11, 1987. These documents are included in Appendix A.

3.1 Precision Testing

In order to evaluate collection precision, which depends on mass measurement uncertainty, flow control and equality of the sample streams, the sampler was operated for 16 intervals (including 4 intervals for blanks) using ringed Teflon filters which were analyzed only for mass. Sample Line 5 was excepted from this testing; it was used to determine ammonia collection efficiency, as discussed below (Section 3.3). Figure 3-1 shows the schematic for the precision testing. For this testing, uncoated tubes were used in Line 3 for the nitric acid denuder. The sampling intervals varied from four to twenty-four hours.

Table 3-1 summarizes the results for the 12 sampling periods. The results are grouped by the four types of aerosol inlets: total (open-face - Lines 1 and 2) low capacity PM-2.5 (AIHL design cyclone - Lines 3-5), high capacity PM-2.5 (Sensidyne 240 cyclone - Lines 6-12) and PM-10. (The table also includes the results from a collocated single PM-10 inlet sampler which will be discussed in Section 3.2.) The widest variation was between the two open-face filters (13%), which was reduced to 7% when the average blank values were subtracted. The mean coefficients of variation within each inlet data set are shown in Table 3-1.

The two cyclones did differ in mass collection results. Some of the difference is due to the greater importance of blanks for the low flow data. Subtracting the average blank values yields a coefficient of variation of 6%. The large variations of the low-capacity cyclone data for a few tests is mostly due to the errors involved in determining smaller masses (8 of the 24 samples had loadings below the overall detection limits shown in Table 3.2). The ratio of PM-2.5 mean mass to total mean mass was .45 and that of PM-10 mean mass to total mean mass was 0.71. These values are typical of urban air.

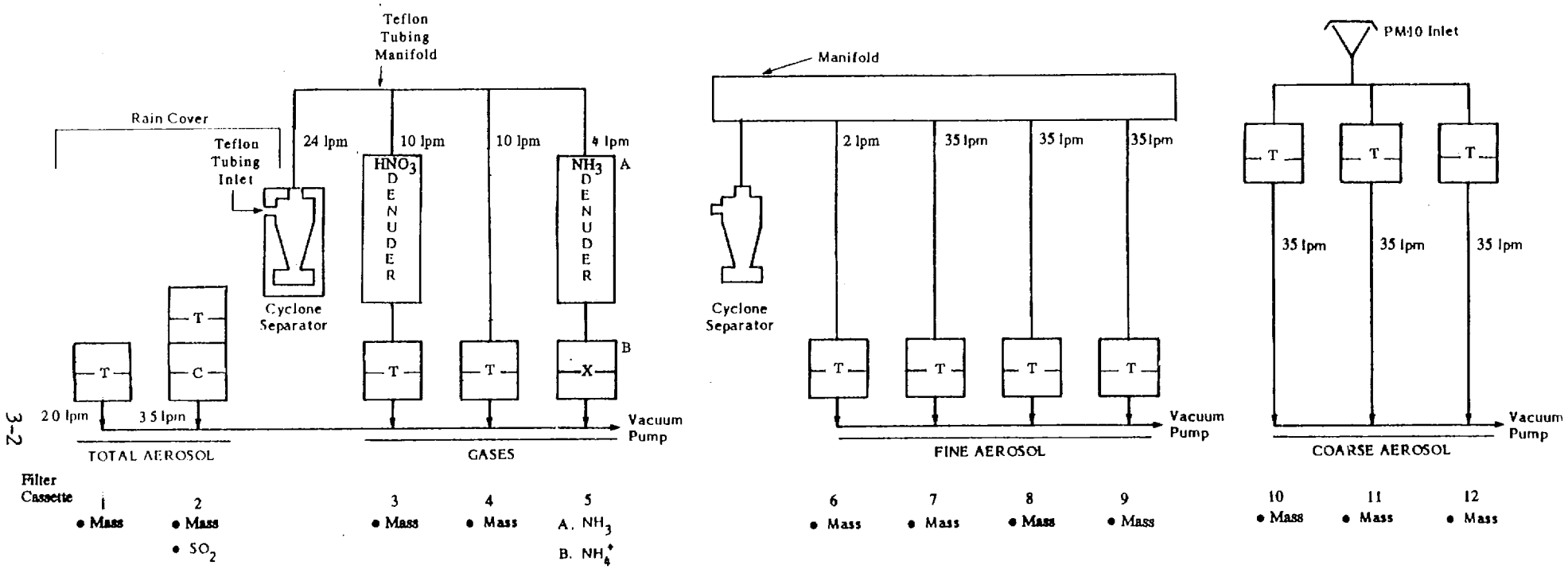

3-2

P = Nuclepore
N = Nylon Filter
X = Oxalic Acid Impregnated Quartz Fiber Filter
Q = Quartz Fiber Filter
T = (Teflo) Teflon Filter
C = Carbonate Impreganted Cellulose Filter
Z = (Zefluor) Teflon Filter

FIGURE 3-1. SCAQS sampler flow diagram for prototype prescision testing.

TABLE 3-1. Statistical summary of mass concentrations for SCAQS prototype precision testing ($\mu g/m^3$).

Inlet	Test No. / Duration (min) / Filter Position	Nominal Flow (ALPM)	1 341	2 295	3 635	5 237	6 255	7 616	9 596	10 240	11 240	13 648	14 296	16 1410	Mean	Coeff. of Var.
Total	1	20	47.1	44.7	30.1	62.4	56.8	77.9	27.1	59.0	42.5	34.4	69.6	51.1	50.2	
Total	2A	35	48.9	41.5	42.4	84.7	74.2	40.7	40.5	54.6	62.3	52.3	100.6	78.3	60.1	
Total	Mean		48.0	43.1	36.3	73.6	65.5	59.3	33.8	56.8	52.4	43.4	85.1	64.7	55.2	13%
2.5 µm (LC)	3	10	42.9	24.7	42.7	63.1	37.3	33.9	22.5	57.2	11.3	19.9	35.1	NA	37.7	
2.5 µm (LC)	4	10	27.9	39.8	28.9	67.4	48.1	36.6	26.2	44.5	38.4	35.9	44.2	NA	39.8	
2.5 µm (LC)	Mean		35.4	32.3	35.8	65.3	64.2	26.0	24.4	50.9	24.9	27.9	39.7	NA	38.8	4%
2.5 µm (HC)	7	37	27.0	25.6	19.5	43.7	27.5	17.3	17.0	13.0	24.6	22.9	34.3	27.7	25.0	
2.5 µm (HC)	8	37	39.6	26.3	21.5	40.4	30.5	19.4	13.5	14.7	24.8	24.4	32.9	27.3	26.3	
2.5 µm (HC)	9	37	34.6	24.1	20.1	37.1	32.2	16.1	15.4	14.4	20.8	25.3	32.8	27.7	25.1	
2.5 µm (HC)	Mean		33.7	25.3	20.4	40.4	30.1	17.6	15.3	14.0	23.4	24.2	33.3	27.6	25.5	3%
10 µm	10	38	46.1	27.2	34.5	60.7	46.7	28.5	21.9	32.8	42.5	38.8	58.7	48.4	40.6	
10 µm	11	38	48.8	27.5	32.2	51.6	44.8	29.2	23.2	28.9	36.5	36.3	54.7	46.9	38.4	
10 µm	12	38	44.1	29.7	34.3	56.7	44.1	31.6	25.7	29.8	39.5	37.9	55.0	47.7	39.7	
10 µg	Mean		46.3	28.1	33.7	56.3	45.2	29.8	23.6	30.5	39.5	37.7	56.1	47.7	39.5	3%
10 µm (SF)*	13	120	36.1	26.3	29.9	51.2	43.3	29.6	27.2	32.1	41.6	40.2	55.0	44.4	38.1	

HC = High capacity
LC = Low capacity
SF = Single filter at outlet of inlet
*Collocated PM-10 inelt, not part of sampler

TABLE 3-2. Dynamic blank value summary for SCAQS prototype precision testing. (µg/filter)

Inlet	Filter Position	Test 4	Test 8	Test 12	Test 15	Mean	σ	Overall Detection Limit = 3σ
Total	1	62	51	NA	NA	57	8	24
	2	110	184	NA	NA	147	52	156
PM-2.5 (LC)	3	61	57	1	-1	30	34	102
	4	114	47	92	85	85	28	84
PM-2.5 (HC)	7	190	34	147	46	104	76	228
	8	120	5	6	42	43	54	162
	9	13	53	3	77	37	35	105
PM-10 (HC)	10	41	8	107	17	43	45	135
	11	50	16	-17	17	17	27	81
	12	23	19	21	10	18	6	18
PM-10 (SF)	13		45	0	NA	23	--	--

Four of the intervals were used to collect dynamic blanks; Table 3-2 summarizes the results. The blank filters were loaded into the sampler, operated for less than one-minute and allowed to stay in the sampler for two to twelve hours. For the two inlets normally used for mass collection, the high-capacity PM-2.5 and PM-10, the blank accounted for approximately 25% and 5% of the calculated particulate mass concentration, respectively. The results from the blanks were higher than expected and showed wide variability, accounting for a significant fraction of the standard errors calculated for the mass concentration measurements. Although the relative blank levels for the low-capacity cyclone were particularly high and varied widely, the coefficients of variation of the mean data is quite good. Similarly, the mean precision for these lines for determining nitrate in the side-by-side evaluation (Section 4) was much better than the overall detection limits would suggest. The overall detection limits in Table 3-1 for Lines 8 and 11, used for mass determinations in the side-by-side evaluation, agree quite well with the results of that study (Section 4).

3.2 PM-10 Manifold Testing

A concern that arose during the circulation of the prototype testing memo was whether the manifold used to split the flow following the PM-10 inlet caused particle loss. This was evaluated by collocation of a single PM-10 sampler using an identical PM-10 size-selective inlet. This single filter was held in an open-face filter holder that was inserted into the bottom of the PM-10 inlet using a specially made adapter. Since the single filter was also 47-mm in diameter, this resulted in face velocity thrice that of the three filters sampling from the same manifold. The results are shown in the last row of Table 3-1. There was no significant difference between the calculated mass using a single PM-10 filter and the mean of the calculated mass of the three filters that used a common manifold (0.5% when mean blanks were subtracted).

3.3 Penetration Testing of Carbonate Impregnated Filters

During the precision testing, a pair of sodium carbonate-impregnated filters (22% coating solution) was placed in position 2B (Figure 3-1). Breakthrough of SO_2

to the second filter ranged from 10-35% at flow rates of 35 to 38 lpm. For this reason, the flow for these filters was decreased from 38 lpm to 22 lpm. Penetration at the lower flow rate was found to be insignificant (about 5%) when a synthetic source was used at EMSI.

3.4 Penetration Testing of Oxalic Acid-Impregnated Whatman 41 Filters

Also during the precision testing, a pair of Whatman-41 filters impregnated with oxalic acid (5% solution) was operated in position 5B (Figure 3-1). Ammonia denuders were used in position 5A. The Whatman-41 filters were not quantitative for ammonium collection (assuming the denuder removed ammonia). The probable cause was the known poor collection efficiency for this filter type. As a result, a change was made to a quartz fiber filter medium that has greater than 99.9% collection efficiency.

3.5 Nitric Acid and Ammonia Losses in the Sample Line and Denuder Efficiency Testing

o Original Sampling Scheme

Figure 3-2 shows the experimental setup used to detect losses of ammonia and nitric acid in the sample line. A polytetrafluoroethylene Teflon filter (TEF) was used to remove particulate ammonium and nitrate. A nylon filter (Line 1) and two oxalic acid filters (Line 2) were positioned immediately after the Teflon prefilter as well as in their normal positions in Lines 3, 4 and 5. Since the collection efficiency of the oxalic-acid-impregnated filters was not known, back-up filters were used in positions 2B and 5C. With this experimental setup, the difference in nitrate on the nylon filters without denuders (1 and 4) would be due to losses of nitric acid in the sample line. Loss of ammonia in the sample line would be taken as the difference of ammonium on the oxalic-acid-impregnated filters (2A and 2B) and the sum of ammonium in the ammonia denuder and the following filters (5A, B and C). The efficiency of the nitric acid denuder is determined by the nitrate on the nylon filters with and without a denuder (3 and 4). The efficiency of the ammonia denuder is determined by the ammonium in the denuder and that on the following filters (5A, 5B and C).

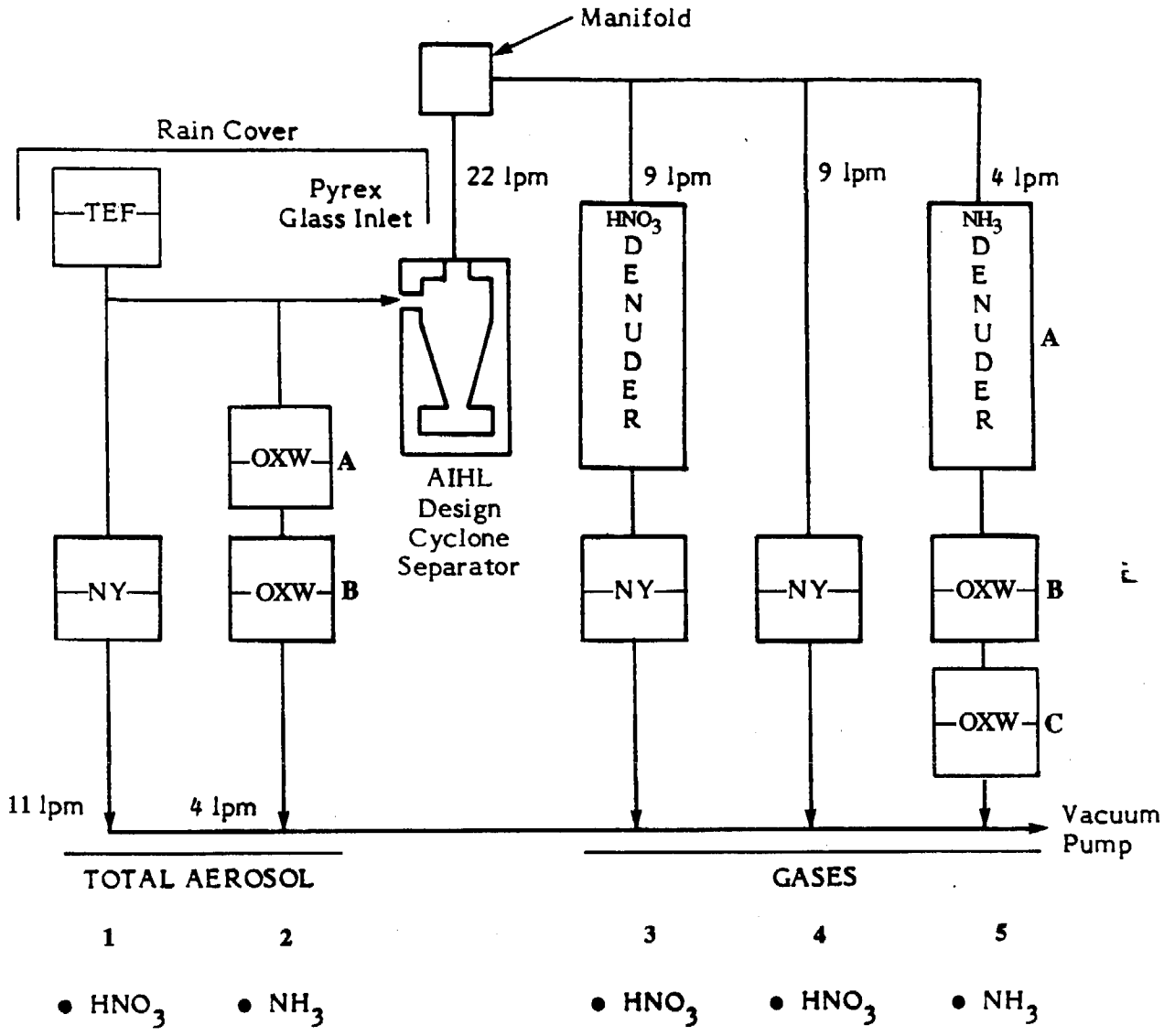

NY= Nylon Filter
OXW= Oxalic Acid Impregnated Cellulose Acetate Filter
TEF= Teflon Filter

FIGURE 3-2. Schematics of sampling methods to evaluate losses of ammonia and nitric acid.

87-54B

Table 3-3 shows the results of the four testing intervals. The following conclusions may be drawn from the mean concentrations observed:

- Considerable nitric acid is lost in the sampling system (11.8 $\mu g/m^3$ before and 2.19 $\mu g/m^3$ after or 81%).
- A significant amount of ammonia is also lost in the sampling system (3.67 $\mu g/m^3$ before and 1.62 $\mu g/m^3$ after or 56%).
- About 10% of the ammonia penetrates the first oxalic acid-impregnated filter.
- The nitric acid denuder efficiency is approximately 70%, based on the mean, but it appears that for 1 of the 4 intervals, more nitric acid is observed after the denuder. The efficiency is 80% with this data point left out. These results may have been compromised by unequal loss of nitric acid in the manifold, which was later replaced.
- The efficiency of the ammonia denuder (5A/(5A+5B+5C) is about 84%.

o **Testing to Locate Source of Nitric Acid Loss**

Since nitric acid loss was more severe than ammonia loss, this was investigated first. The glass inlet was investigated separately by isolating it from the other components. A Teflon filter was used to remove particulate nitrate. The sample stream was then split between a nylon filter in an in-line holder and the inlet followed by another nylon filter in an in-line holder. All connections were made with short glass tubing using tygon to make butt connections. A sampling rate of 9 lpm was used; thus the residence time was slightly over twice as long as for the normal sampling configuration (22 lpm). This residence time is acceptable since the objective was to locate the loss, not quantify it. The results are shown in Tests 1-3 of Table 3-4 and indicate a mean loss of 37%. Since the loss in the glass inlet was much less than the total loss of 81%, testing was conducted to pinpoint the loss as being either in the cyclone or in the stilling chamber. An alternative to the stilling chamber, which also serves as a manifold, was also tested. This alternative manifold consisted of 1/2" FEP tubing with PFA injection-molded fittings. Figure 3-3 shows the sampling schemes used: 3-3a is the normal combination, 3-3b is the cyclone alone, 3-3c is the stilling chamber alone, 3-3d is

TABLE 3-3. Results of initial nitric acid and ammonia penetration tests (blank corrected).

Position	Description	Test 1 $\mu g/m^3$	Test 2 $\mu g/m^3$	Test 3 $\mu g/m^3$	Test 4 $\mu g/m^3$	Mean $\mu g/m^3$
1	HNO_3 Before Inlet	18.8	4.36	19.8	4.41	11.8
3	HNO_3 After Denuder	0.51	0.35	1.18	0.61	0.66
4	HNO_3 No Denuder	0.06	1.02	5.86	1.82	2.19
5A	NH_3 Denuder	0.84	1.06	1.85	NA	1.25
* 2A	NH_3 Before Inlet	4.22	3.06	3.74	NA	3.67
* 2B	NH_3 Before Inlet Backup	0.54	0.30	0.37	NA	0.40
* 5B	NH_3 After Denuder	0.33	0.35	0.43	NA	0.37
* 5C	NH_3 After Denuder, Backup	-0.07	-0.09	-0.28	NA	-0.14

*Whatman 41 oxalic acid-impregnated filter

TABLE 3-4. Penetration of nitric acid through the glass inlet (μg NO_3^-/m^3).

	Test 1	Test 2	Test 3	Mean
Before Glass Inlet	5.82	1.00	11.1	5.97
After Glass Inlet	3.13	0.98	7.22	3.78

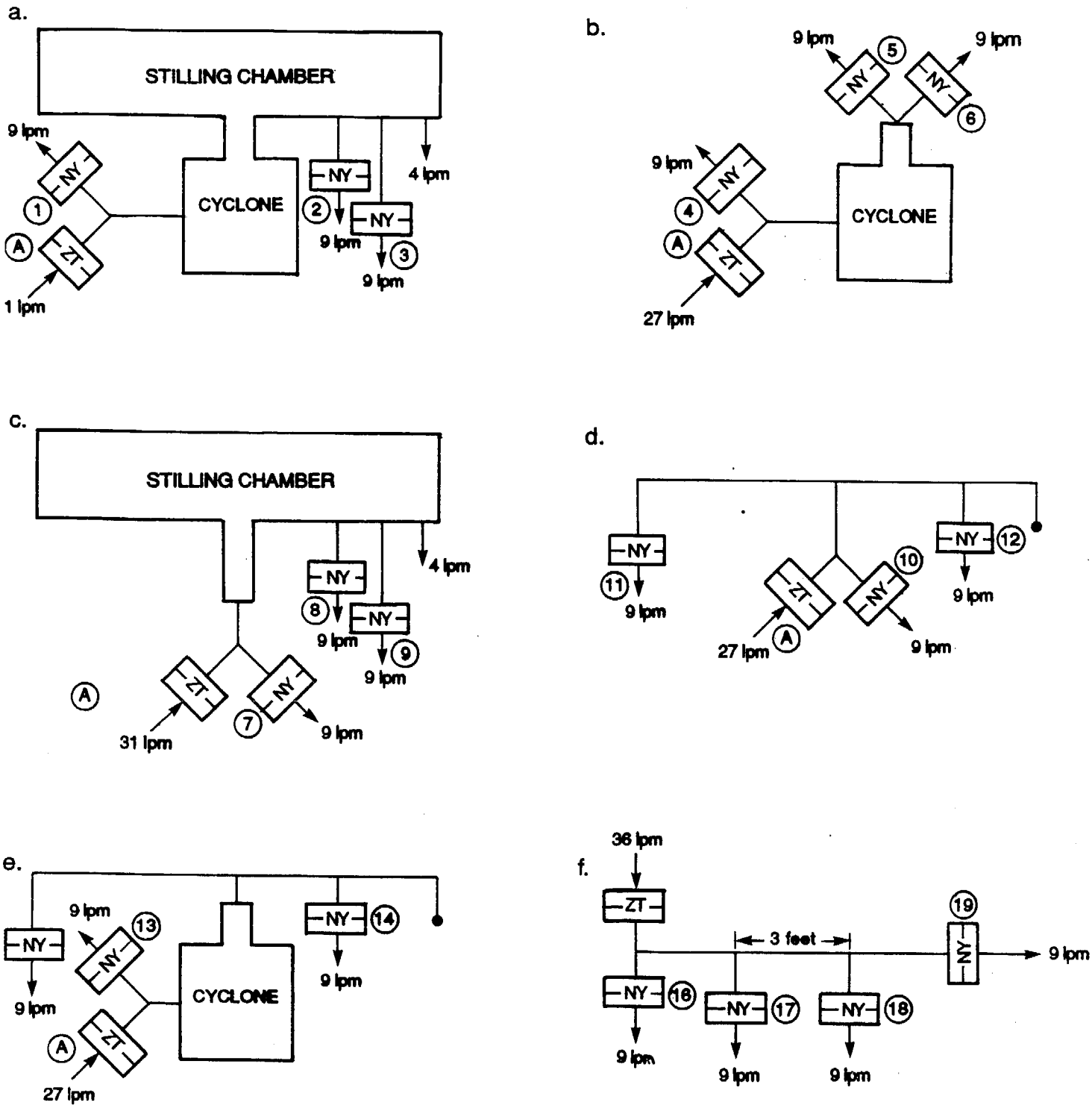

NY = Nylon Filter
ZT = (Zefluor) Teflon Filter

FIGURE 3-3. Schematics of sampling methods used to test key sampler components.

the 1/2" Teflon manifold alone, 3-3e is the proposed final configuration using the Teflon manifold with the cyclone, and 3-3f is three feet of FEP Teflon tubing. All of the filters were attached to the equipment using glass "Y's", 3/8" ID, which had been washed with dilute HCl. Tygon tubing was used to make leak-proof butt connections. Table 3-5 gives the results and the following conclusions may be drawn from them.

- The precision of the analysis of the air sampled after the pre-filter is quite good. For the four equivalent means (mean of filters 1, 4, 7, 10) the coefficient of variation is 3%.
- The loss of nitric acid through the cyclone alone is 8%, the stilling chamber alone is 74%, and a combination of both is 78%.
- The loss of nitric acid through the Teflon manifold is insignificant, 4%.
- The loss of nitric acid through the sampling system, consisting of a cyclone and a Teflon manifold is 5%, which should be acceptable since it is near the analytical precision.
- Based on limited data, the loss of nitric acid through 3 feet of FEP Teflon was about 10%.

Based on these results, the samplers were retrofitted with Teflon manifolds to replace the stilling chamber and a Teflon inlet to replace the glass one.

o **Testing Ammonia Penetration and Collection Efficiency**

The initial testing showed losses of ammonia in the sample line (56%), a denuder efficiency of 84%, and a filter collection of ammonium of 90%. In order to improve these statistics, these components were modified and evaluated. Figure 3-4 shows the experimental system. Since a Teflon manifold was adopted to control nitric acid losses, a 1/2" Teflon manifold system was used. The hydrogen fluoride (HF) etching of the ammonia denuder was increased from 30 seconds to 5 minutes. Quartz fiber filters were used instead of Whatman-41 filters for impregnating with oxalic acid.

TABLE 3-5. Penetration of nitric acid through SCAQS sampler components, blank corrected (μg NO_3^-/m^3)

Holder No.	Holder Position	Figure	Test 1	Test 2	Test 3	Mean
1	Before stilling chamber/cyclone	3.3.a	18.8	2.46	23.5	14.9
2	After stilling chamber		4.01	0.81	5.27	3.36
3	After stilling chamber		3.76	0.83	5.38	3.32
4	Before cyclone	3.3.b	19.3	2.51	20.8	14.2
5	After cyclone		16.5	1.91	20.2	12.9
6	After cyclone		17.0	2.00	20.2	13.1
7	Before stilling chamber	3.3.c	18.6	2.38	21.4	14.1
8	After stilling chamber		4.36	0.93	5.70	3.66
9	After stilling chamber		4.41	0.97	5.53	3.64
10	Before Teflon manifold	3.3.d	19.0	2.13	20.7	13.9
11	After Teflon manifold		17.6	2.02	19.4	13.0
12	After Teflon manifold		18.7	2.24	20.1	13.7
13	Before cyclone/Teflon manifold	3.3.e	13.4*	1.95	17.5	11.0
14	After cyclone/Teflon manifold		12.2*	1.60	17.1	10.3
15	After cyclone/Teflon manifold		12.4*	1.66	17.2	10.4
16	**Before Teflon inlet	3.3.f	47.0	NA	42.0	44.5
17	**Before Teflon inlet		NA	NA	NA	
18	**After Teflon inlet		39.2	NA	37.6	38.4
19	**After Teflon inlet		NA	NA	NA	

* Started 2 hrs. later than others in the test.
** Samples collected at a different time.

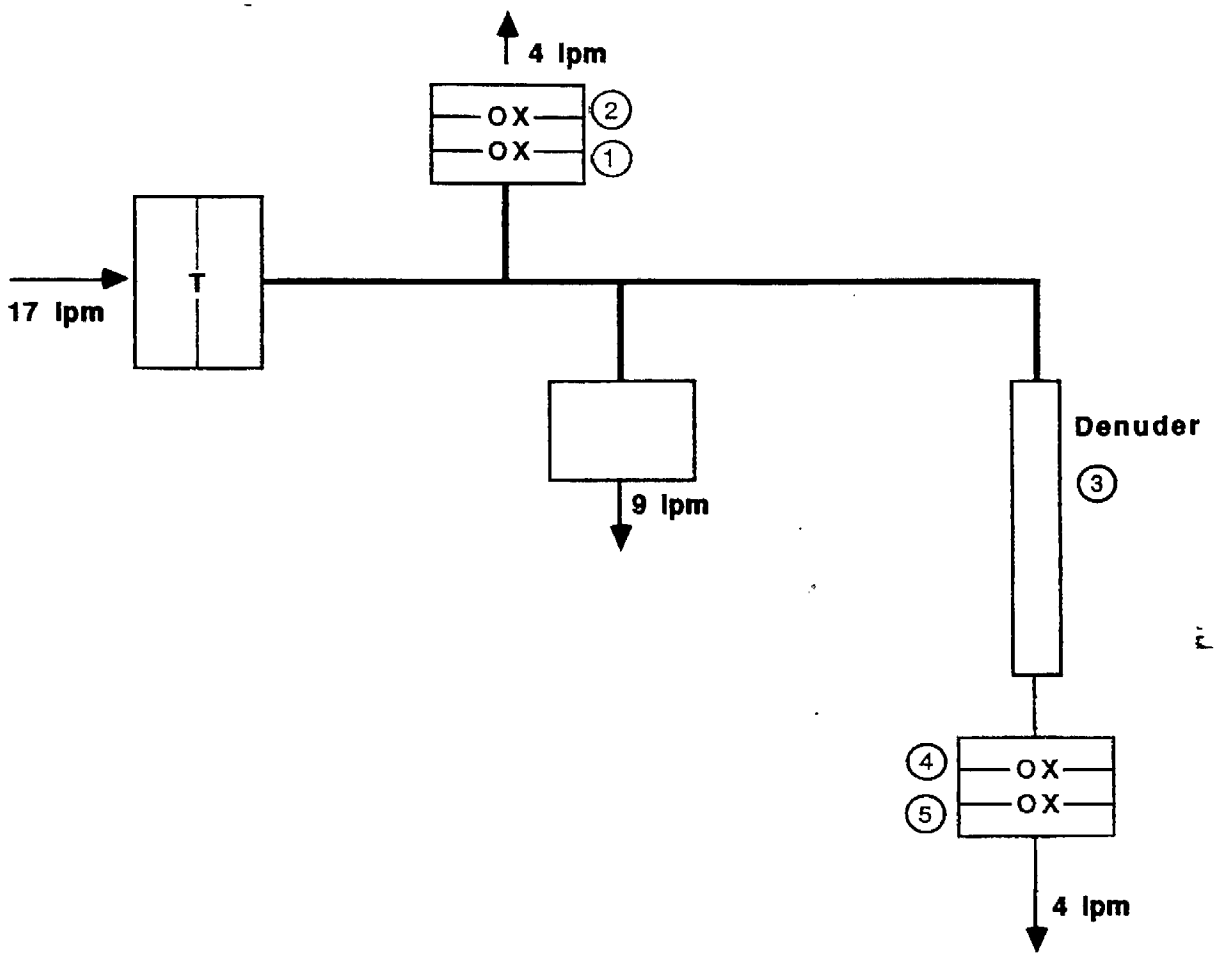

T = Teflon Filter
OX = Oxalic Acid Impregnated Quartz Fiber Filter

FIGURE 3-4. Schematic of sampling system to evaluate ammonia and ammonium losses.

Table 3-6 shows the results. Because of the low flow rate, the filter blank can be quite significant; thus, all filters were blank corrected. The standard deviation of the filter blank was 0.1 µg/filter; with the nominal flow rates and sampling interval, this corresponds to a concentration of 0.05 $\mu g/m^3$. The standard deviation of the denuder blank was .36 µg/filter, resulting in a concentration of 0.2 $\mu g/m^3$. The following conclusions may be drawn:

- Ammonia was not lost in the sampling system, since the amount of ammonium on the denuder and after filter was somewhat greater than the amount of ammonium on the front filter.
- The first oxalic-acid-impregnated filter removed essentially all of the ammonia.
- The denuder removes about 90% of the ammonia.

TABLE 3-6. Testing ammonia penetration through SCAQS sampler components, blank corrected (μg NH_4^+/m^3).

Sample Position	Sample Type	Test 1	Test 2	Mean
1	Before Denuder, Front Filter	4.83	5.73	5.28
2	Before Denuder, Back Filter	0.0	0.0	0.0
3	Denuder	4.83	6.40	5.62
4	After Denuder, Front Filter	0.68	0.22	0.45
5	After Denuder, Back Filter	0.0	0.0	0.0

4. SIDE-BY-SIDE EVALUATION PROCEDURE

In order to meet the objectives of SCAQS, all samplers must be equivalent. To verify equivalency and to determine the precision of the results, all ten samplers (the prototype, one built for GMRL and the eight built for SCAQS) were operated side-by-side for a series of tests. The protocol for this side-by-side sampling was described in two memos on performance testing that were circulated in preliminary form on February 6, 1987 and in final form March 11, 1987. These protocols are included in Appendix A.

The samplers were used in the standard mode shown in Figure 2-3 except that the Teflon prefilters were not used on Lines 1, 3 and 4, since the clogging of the nylon filters was not noticed until the field studies due to unusually clean air during the testing periods. During the first four periods, A-D, Lines 6-12 were operated, since the final modifications of Lines 3-5 (Sections 3-2 to 3-5) had not been completed. The validated modified Lines 3-5 and Lines 1 and 2 were operated during periods E-H. Finally, the complete sampling system, Lines 1-12, was operated during Tests I and J. Dynamic blanks, filters positioned in the sampler for a period of time corresponding to a typical interval with no flow, were collected during Period K.

The samplers were operated at the AeroVironment Monrovia facility with five of them (Samplers 3, 4, 5, 8, and GM) located at 909 Myrtle Avenue and the other five (Samplers 1, 2, 6, 7, and P [the original prototype]) at 825 Myrtle Avenue, approximately 100 meters to the north. The side-by-side testing also functioned as a final operator training session. Technician performance was critiqued during and after each sampling episode. Special emphasis was put on the replacement of the denuder tubes, which was more complicated than filter replacement. These critiques resulted in the final changes to the operations manual (final protocol for the SCAQS sampler is in Appendix A). No further changes were necessary to the SCAQS samplers.

The sampling was conducted between June 3 and June 7, 1987, using intervals of 3.5 to 12 hours. The laboratories did not feel that it was cost effective to

analyze all of the samples collected; Table 4-1 shows the analyzed periods by sample line and component analyzed. The PM-10 and PM-2.5 Teflon samples originally collected for mass and XRF analysis during Test I were directly extracted and analyzed by ERT as a quality assurance test. The results of this testing are included in Appendix B, as they are not a part of the sampler testing, but rather a QA evaluation.

The rotameters were calibrated against mass flowmeters after the sampling was concluded. Samples that were flagged due to flow uncertainty or filter-handling problems were omitted from the data set; these amounted to 4 percent of the samples. Although field blanks were analyzed to determine measurement detection limits, these values were not used for blank corrections.

4.1 Detection Limits and Dynamic Blank Levels

In order to assess the statistical significance of samples collected during the side-by-side comparison, it is necessary to look at the precision and sensitivity of the analytical method. The overall detection limit is defined as the analytical detection limit or three times the filter blank variability, whichever is larger. These overall detection limits are calculated in Table 4-2, assuming the normal flow rates and a 3.5 hr collection period. This table also includes the parameters needed to calculate the detection limits and typical ambient concentrations. The filter blank variability was calculated from actual blank samples collected during Period K; Table 4-3 shows these results.

4.2 Results of Collocated Sampling

Table 4-4 and Figures 4-1 to 4-3 summarize the results of the side-by-side evaluation. Because of the unusually clean air in Monrovia, California, during the side-by-side evaluation, the loadings on some of the filters, especially those sampled at low volumes, are near or below the overall detection limit (three times the dynamic blank variability). As Table 4-4 shows, all the species except ammonium ion, mass, sulfur (S and $SO_4^=$), organic carbon and iron have mean

TABLE 4-1. Data sampled (S) and analyzed (A) for the side-by-side evaluation.

Period		A		B		C		D		E		F		G		H		I		J		K*	
Time (PDT)		2000-0800		0800-1400		1400-2000		2000-0800		0900-1230		1230-1600		1600-2000		2000-0800		0800-1200		1200-1600		1600-2000	
Date (1987)		6/3-6/4		6/4		6/4		6/4-6/5		6/6		6/6		6/6		6/6-6/7		6/7		6/7		6/7	
Duration (hr)		12		6		6		12		3-1/2		3-1/2		4		12		4		4		4	
Line	Species	S	A	S	A	S	A	S	A	S	A	S	A	S	A	S	A	S	A	S	A	S	A
1	Total Nitrate									X	X	X	X	X	X	X	X	X	X	X	X	X	X
2	SO_2									X	--	X	X	X	X	X	--	X	X	X	X	X	X
3	PM-2.5 NO_3^-									X	X	X	X	X	X	X	X	X	X	X	X	X	X
4	HNO_3 + PM-2.5 NO_3^-									X	X	X	X	X	X	X	X	X	X	X	X	X	X
5A	NH_3									X	X	X	X	X	X	X	X	X	X	X	X	X	X
5B	PM-2.5 NH_4^+									X	--	X	X	X	X	X	--	X	X	X	X	X	X
6	b_{abs}	X	X	X	X	X	X	X	X									X	X	X	X	X	X
7	PM-2.5 Carbon	X	--	X	--	X	X	X	X									X	X	X	X	X	
8	PM-2.5 Elements	X	X	X	X	X	X	X	X									X	**	X	**	X	X
8	PM-2.5 Mass	X	X	X	X	X	X	X	X									X	**	X	**	X	X
9	PM-2.5 Cl^- and $SO_4^=$	X	--	X	--	X	X	X	X									X	X	X	X	X	X
9B	PM-2.5 Artifact Carbon	X	--	X	--	X	X	X	X									X	X	X	X	X	X
10	PM-10 Carbon	X	--	X	--	X	X	X	X									X	X	X	X	X	
11	PM-10 Elements	X	X	X	X	X	X	X	X									X	**	X	**	X	X
11	PM-10 Mass	X	X	X	X	X	X	X	X									X	**	X	**	X	X
12	PM-10 Cl^- and $SO_4^=$	X	--	X	--	X	X	X	X									X	X	X	X	X	X

*Dynamic field blanks
**These filters were analyzed by ERT for Cl^-, $SO_4^=$, NH_4^+ and NO_3^- only for quality assurance.

TABLE 4-2. Detection limits for species collected by AV-SCAQS Gas and Aerosol Sampler

Line No.	Species	Collection Substrate	Flow Rate (lpm)	Sample Volume (m^3)	Extraction Volume (ml)	Analytical Detection Limit+ (µg/ml)	Analytical Detection Limit+ ($\mu g/m^3$)	Filter Blank Variability (3σ (µg/filter)	Overall** D.L. ($\mu g/m^3$)	Typical Ambient Conc. ($\mu g/m^3$)
1	Total Nitrate	Nylon	11	1.9	10 (IC eluent)	0.018	0.09	1.2	0.8	10
2	SO_2	$CO_3^=$-CE behind Teflon	20	4.2	10 (0.00% H_2O_2) 0 (H_2O)	0.015	0.14	0.69	0.16	15
3	PM-2.5 NO_3^-	Nylon behind MgO denuder	9	1.9	10 (IC eluent)	0.018	0.09	1.5	0.8	8
4	HNO_3 + PM-2.5 NO_3^-	Nylon	9	1.9	10 (IC eluent)	0.018	0.09	1.5	0.8	21
5a	NH_3	Oxalic acid denuder	4	0.84	10 (H_2O)	0.012	0.14	0.45	0.54	3
5b	PM-2.5 NH_4^+	Oxalic acid-CE	4	0.84	10 (H_2O)	0.012	0.14	0.9	1.1	5
6	B-absorption	Polycarbonate	5	1.2	--	--	32^{++}	96^{++}	96^{++}	200^{++}
7	PM-2.5 Org C.	Quartz	37	7.8	--	--	0.13		0.39	10
7	PM-2.5 Elem C.	Quartz	37	7.8	--	--	0.13		0.39	2
9B	Organic Artifacts	Quartz	37	7.8	--	--	0.13		0.39	2
8	PM-2.5 Elements (S)	Teflon	37	7.8	--	--	0.06	0.93	0.12	0.5
8	PM-2.5 Mass	Teflon	37	7.8	--	15 µg	1.9	150	19	40
9	PM-2.5 $SO_4^=$	Teflon	37	7.8	15 (H_2O)	0.015	0.03	1.35	0.17	5
9	PM-2.5 Cl^-	Teflon	37	7.8	15 (H_2O)	0.015	0.03	0.21	0.03	
10	PM-10 Org. C	Quartz	38	8.0	--	--	0.13		0.39	10
10	PM-10 Elem. C	Quartz	38	8.0	--	--	0.13		0.39	2
11	PM-10 Elements (Fe)	Teflon	38	8.0	--	--	0.06	0.30	0.04	2
11	PM-10 Mass	Teflon	38	8.0	--	15 µg	1.9	79	9.9	50
12	PM-10 $SO_4^=$	Teflon	38	8.0	15 (H_2O)	0.015	0.03	1.35	0.17	5
12	PM-10 Cl^-	Teflon	38	8.0	15 (H_2O)	0.015	0.03	0.21	0.03	5

* Assume 3.5 hour collection
** Overall detection limit = 3 x filter blank variability (µg/filter) divided by m^3
\+ Analytical detection limit µg/ml x ml divided by m^3
++ Units - $10^{-6} m^{-1}$

TABLE 4-3. Period K - dynamic blank summary (µg/filter - lab blanks subtracted).

Line Species	1 Total Nitrate	2 SO_2	3 PM-2.5 NO_3^-	4 HNO^+ PM-2.5 NO_3^-	5A NH_3	5B PM-2.5 NH_4^+	6 PM-2.5 b_{abs}*	8 PM-2.5 Mass	8 PM-2.5 S	9 PM-2.5 Cl^-	9 PM-2.5 $SO_4^=$	11 PM-10 Mass	11 PM-10 Fe
n	2	5	3	1	8	10	10	6	10	5	5	8	10
$\bar{x}$	5.3	0.35	1.87	1.80	0.14	0.60	39	40.6	-0.26	0.208	3.04	36.4	0.34
σ	0.4	0.23	0.52		0.15	0.28	32	50.5	0.31	0.069	0.45	26.3	0.10
Coef. of Var.	8%	65%	29%		107%	47%	82%	124%	119%	33.2%	15%	72%	30%
3σ	1.2	0.69	1.5		0.45	0.9	96	150	0.93	0.21	1.35	79	0.30

* $10^{-6} m^{-1}$ assuming volume of 7.8 m^3

TABLE 4-4. Summary of SCAQS side-by-side evaluation.

Line	Species	Typical Concentration for the SCAB* $\mu g/m^3$	Mean Concentration for the Evaluation $\mu g/m^3$	Mean Overall Detection Limit** %	Mean Coefficient of Variation*** %
1	Total NO_3^-	10	5	16	9
2	SO_2 as $SO_4^=$	15	1	16	21
3	PM-2.5 NO_3^-	8	3	26	7
4	HNO_3 + PM-2.5 NO_3^-	21	4	20	11
5A	NH_3 as NH_4^+	3	1	54	42
5B	PM-2.5 NH_4^+	5	4	28	30
6	b_{abs}	200+	40+	238	20
7	PM-2.5 OC	15	1	4	9
	PM-2.5 EC	2	1	39	25
8	PM-2.5 Mass	40	40	48	8
	PM-2.5 S	0.5	2	6	5
9A	PM-2.5 Cl^-	3	0.1	18	43
	PM-2.5 $SO_4^=$	5	5	3	6
9B	Organic Artifacts	3	6	7	10
10	PM-10 OC	20	13	3	10
	PM-10 EC	4	2	20	20
11	PM-10 Mass	50	60	17	5
	PM-10 Fe	2	2	2	9
12	PM-10 Cl^-	5	0.7	4	11
	PM-10 $SO_4^=$	5	6	3	7

*From Table 1-1.
**Mean overall detection limit is the overall detection limit expressed as a percentage of the mean value for the study.
***Mean coefficient of variation is the mean of the coefficients of variation for each period.
+Units $10^{-6} m^{-1}$

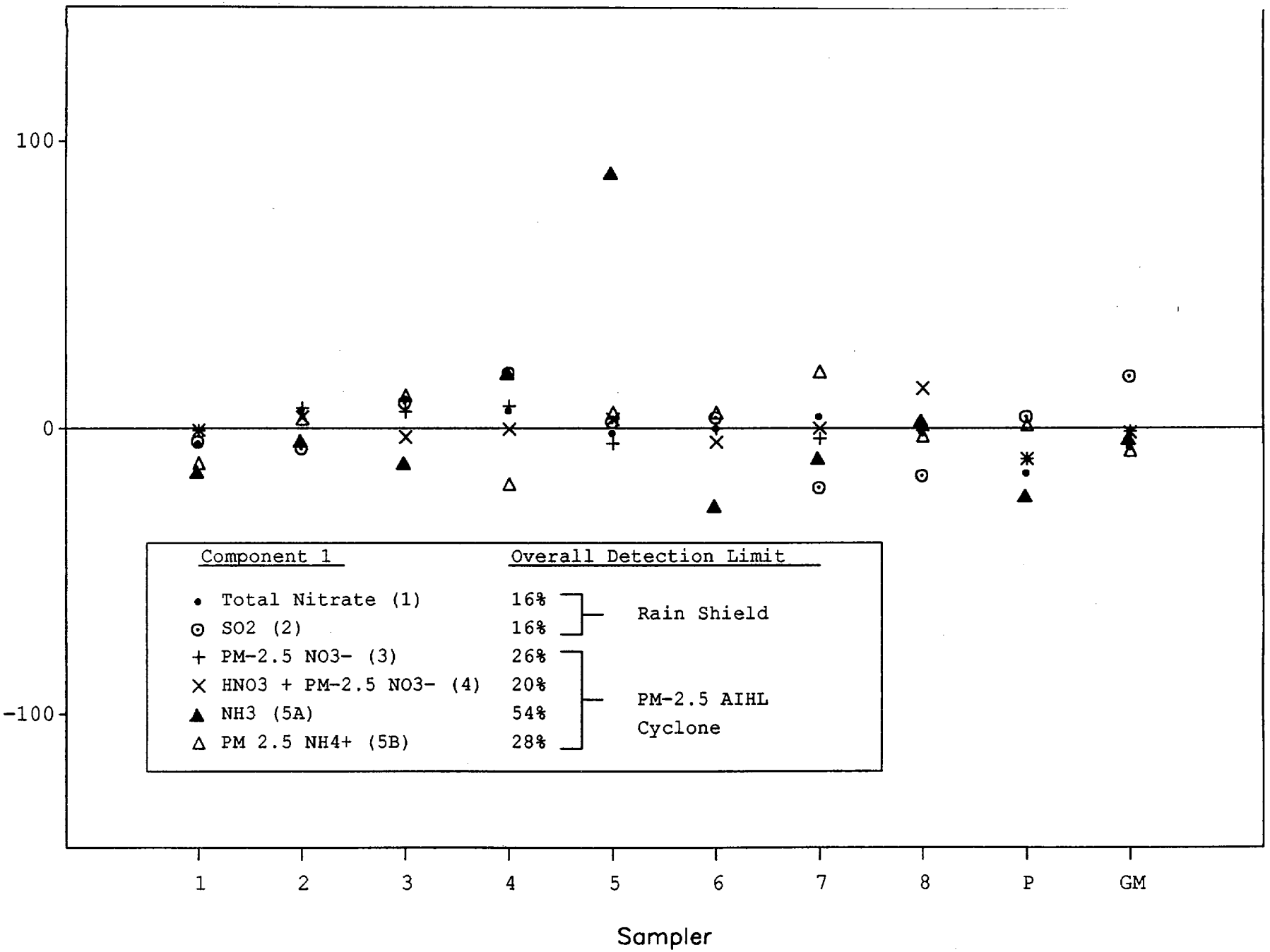

FIGURE 4-1. Mean percent deviations for data from the side-by-side evaluation. Data from Tables 4-5 to 4-10. The number of parentheses indicates the filter position shown in Figure 2-3.

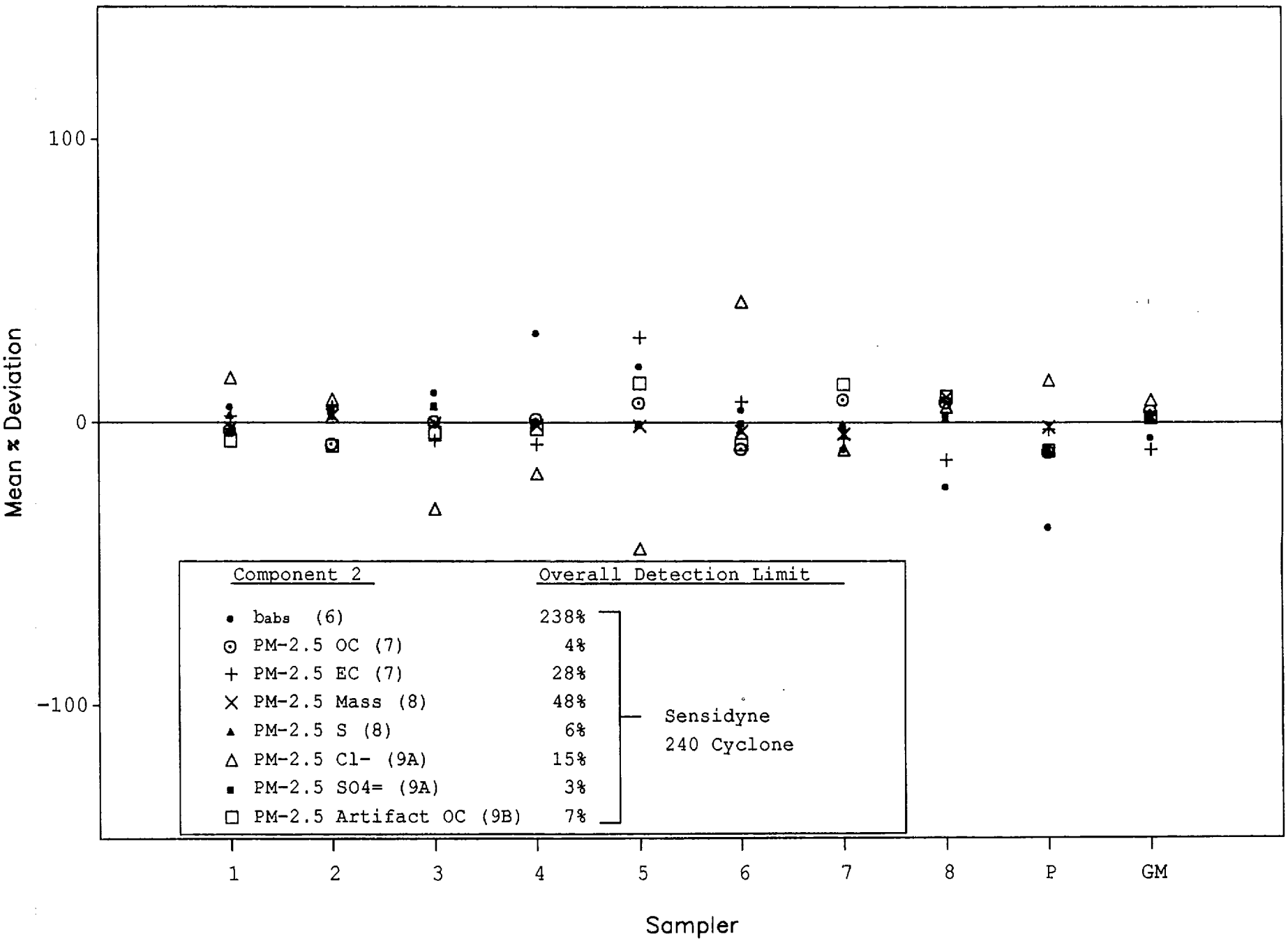

FIGURE 4-2. Mean percent deviations for data from the side-by-side evaluation. The number in parentheses indicates the filter position shown in Figure 2-3. Data from Tables 4-11 to 4-17.

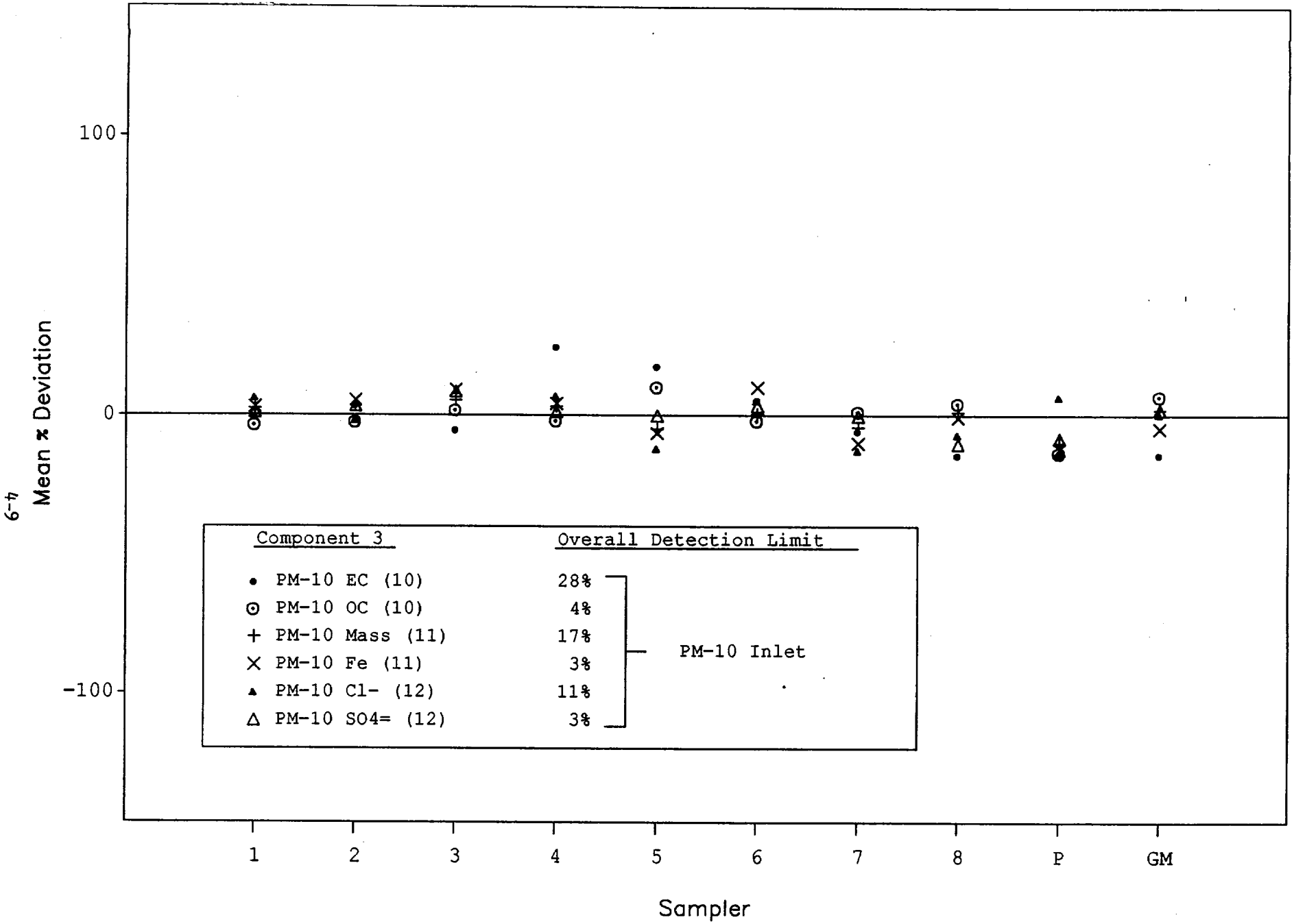

FIGURE 4-3. Mean percent deviations for data from the side-by-side evaluation. The number in parentheses indicates the filter position shown in Figure 2-3. Data from Tables 4-18 to 4-23.

concentrations for the study less than half the typical values. Thus the ratio of detection limit to mean concentration is often quite large (sometimes over 100%).

For species for which typical or near typical concentrations were observed, the mean coefficients of variation were between 5 and 10 percent, which is quite acceptable. The only exception was the ammonium ion from Line 5 which showed large coefficients of variability. The problems of loose or missing ferrules on the denuder above these filters may account for some of the variability in these data as well as the ammonia data. These problems were addressed by training the technicians further in the reloading of the denuders with emphasis on the importance of the proper placement and tightening of the ferrules.

In order to see more clearly the effects of pump and inlet bias for each sampler, the percent deviations of each sampler from the mean of all samplers are plotted in Figures 4-1 to 4-3. Figure 4-1 shows the species collected by Component 1 (Lines 1-5); Figure 4-2 shows those collected by Component 2 (Lines 6-9); and Figure 4-3 shows those collected by Component 3 (Lines 10-12).

Figure 4-1 shows the only significant deviation to be ammonia measured in Sampler 5. For this sampler, the ammonia concentrations are nearly double the mean. The other data points that have significant deviations are for chloride and elemental carbon, for which the concentrations were very low. The large deviations for these two species reflect small differences divided by small concentrations. The detailed data in Tables 4-5 to 4-22 confirm that the ammonia determinations for Sampler 5 are the only ones that show a sampler bias. This bias is probably due to defective or missing ferrules at the denuder connections in Sampler 5. As mentioned above, to resolve this problem the sampler was checked for leaks and its ferrules were replaced; the technicians also received additional training.

Below is a detailed description of the results for each line.

- Line 1. An open-face nylon filter was used to collect total particulate and gas-phase nitrate. Six sets were collected and then analyzed by ion

TABLE 4-5. Line 1: Total nitrate on nylon filters ($\mu g\ NO_3^-/m^3$)

Period / Sampler	E	F	G	H	I	J	Mean	Mean % Dev
1	1.20	15.50	8.26	1.14	1.69	3.04	5.14	-5.1
2	1.60	17.77	9.56	1.27	1.68	3.18	5.84	+6.9
3	1.76	17.61	8.57	1.43	1.82	3.29	5.75	+10.8
4	1.51	18.72	8.72	1.33	1.71	3.23	5.87	+6.6
5	1.33	16.70	8.21	1.18	1.70	3.11	5.37	-1.4
6	1.46	16.20	8.05	1.15	1.74	3.33	5.32	+0.3
7	1.63	18.42	8.47	1.27	1.71	2.90	5.73	+4.5
8	1.41	15.64	7.69	1.13	1.85	3.26	5.16	-1.1
P	1.27	13.59	6.63	1.04	1.64	2.33	4.41	-15.3
GM	1.32	14.87	7.07	1.12	1.74	3.09	4.87	-6.3
Mean	1.45	16.50	8.12	1.21	1.73	3.07		
Std. Dev.	0.17	1.57	0.79	0.11	0.06	0.28		
Coeff. of Var.	12%	9%	10%	9%	3%	9%		
Overall Detection Limit ($0.8\ \mu g/m^3$)	55%*	5%*	10%*	66%*	46%*	26%*		

*Overall detection limit divided by mean value for each period.

TABLE 4-6. Line 2: SO_2 by $SO_4^=$ analysis of carbonate impregnated filters ($\mu g\ SO_4^=/m^3$).*

Period / Sampler	F	G	I	J	Mean	Mean % Dev
1	0.91	2.10	ND	0.65	1.22	-4.4
2	0.97	2.02	0.20	0.78	0.99	-6.8
3	1.06	2.40	0.34	0.68	1.12	+9.2
4	ND	ND	0.27	1.21	0.74	+19.6
5	0.94	1.98	0.33	0.76	1.00	+2.4
6	ND	1.89	0.24	1.09	1.07	+3.9
7	0.75	1.63	0.15	0.84	0.84	-20.5
8	0.82	1.57	0.24	0.69	0.83	-16.3
P	1.04	2.24	0.35	0.57	1.05	+4.2
GM	0.79	2.04	0.52	0.86	1.05	+18.3
Mean	0.91	1.98	0.29	0.81		
Std. Dev.	0.11	0.26	0.10	0.19		
Coeff. of Var	13%	13%	35%	23%		
Overall Detection Limit ($0.16\ \mu g/m^3$)	18%**	8%**	55%**	20%**		

*Samples not analyzed for periods E and H.
**Overall detection limit divided by mean for each period.

TABLE 4-7. Line 3: PM-2.5 nitrate on nylon filters (μg NO_3^-/m^3)

Period / Sampler	E	F	G	H	I	J	Mean	Mean % Dev
1	0.84	10.54	4.76	0.69	0.90	1.29	3.17	-0.8
2	0.99	10.95	6.05	0.68	0.90	1.32	3.48	+7.2
3	0.95	11.42	4.92	0.68	0.98	1.39	3.39	+5.8
4	0.99	11.35	5.42	0.75	0.93	1.31	3.46	+7.7
5	0.91	10.29	4.65	0.61	0.83	1.16	3.08	-5.4
6	0.89	10.42	4.87	0.70	0.89	1.24	3.17	-0.2
7	1.00	9.39	4.64	0.67	0.80	1.21	2.95	-3.6
8	0.96	9.16	4.72	0.71	ND	1.29	3.37	-0.7
P	1.03	8.39	4.05	0.64	0.83	1.18	3.02	-10.7
GM	0.97	10.01	4.40	0.65	0.93	1.27	3.04	-1.2
Mean	0.95	10.19	4.85	0.68	0.89	1.26		
Std. Dev.	0.06	0.97	0.55	0.04	0.06	0.07		
Coeff. of Var.	6%	10%	11%	6%	6%	5%		
Overall Detection Limit (0.8 μg/m^3)	84%*	8%*	16%*	118%*	89%*	63%*		

*Overall detection limit divided by the mean value for each period.

TABLE 4-8. Line 4: Nitric acid and PM-2.5 nitrate on nylon filters (μg NO_3^-/m^3)

Period / Sampler	E	F	G	H	I	J	Mean	Mean % Dev
1	0.93	13.37	6.69	0.89	1.40	2.63	4.32	-0.6
2	1.28	13.81	6.67	0.89	1.38	2.46	4.41	+3.9
3	0.99	12.32	5.83	0.88	1.46	2.62	4.02	-3.1
4	1.11	14.36	4.19	0.88	1.39	3.21	4.19	-0.3
5	1.06	13.73	6.59	0.95	1.41	2.71	4.41	+3.2
6	0.96	12.34	6.07	0.85	1.37	2.55	4.02	-4.9
7	1.25	12.91	6.03	0.88	1.34	2.49	4.15	0.0
8	1.03	13.41	6.41	0.98	2.48	2.65	4.49	+14.0
P	1.00	11.29	5.43	0.83	1.29	2.27	3.68	-10.7
GM	1.38	12.38	5.45	0.84	1.38	2.34	3.96	-1.6
Mean	1.10	12.99	5.94	0.89	1.49	2.59		
Std. Dev.	0.15	0.87	0.73	0.04	0.33	0.24		
Coeff. of Var.	13%	7%	12%	5%	22%	9%		
Overall Detection Limit (0.8 μg/m^3)	72%*	6%*	13%*	89%*	53%*	31%*		

*Overall detection limit divided by the mean for each period.

TABLE 4-9. Line 5A: NH_3 as NH_4^+ on oxalic acid coated denuder (µg NH_4^+/m^3).

Period / Sampler	E	F	G	H	I	J	Mean	Mean % Dev
1	ND	0.72	1.46	0.38	0.74	ND	0.83	-15.0
2	1.65	1.30	1.52	0.57	0.68	1.07	1.13	-4.3
3	2.33	0.56	1.33	ND	ND	1.17	1.35	-12.0
4	ND	0.85	ND	0.83	0.96	2.15	1.20	+19.5
5+	3.31	ND	2.70	1.25	1.78	ND	2.26	+89.4
6	2.13	0.76	1.23	0.39	0.27	ND	0.96	-26.9
7	3.07	0.75	ND	ND	1.24	ND	1.29	-10.2
8	ND	1.30	2.00	0.82	1.15	ND	0.87	+2.9
P	ND	1.34	1.00	0.48	0.47	0.42	0.74	-23.4
GM	1.54	0.82	1.34	0.46	0.74	2.31	1.20	-3.5
Mean	2.34	0.93	1.57	0.65	0.89	1.42		
Std. Dev.	0.67	0.28	0.54	0.28	0.43	0.71		
Coeff. of Var.	28%	30%	34%	43%	48%	50%		
Overall Detection Limit (0.54 µg/m^3)	23%*	58%*	34%*	83%*	61%*	38%*		

*Overall detection limit divided by the mean for each period.
+Statistical bias for Sampler 5.

TABLE 4-10. Line 5B: PM-2.5 NH_4^+ on oxalic acid impregnated filter (µg NH_4^+/m^3).*

Period / Sampler	F	G	I	J	Mean	Mean % Dev
1	4.21	2.48	2.86	5.35	3.72	-12.1
2	6.70	3.14	2.33	5.53	4.43	+3.3
3	4.40	7.14	3.41	3.12	4.52	+11.6
4	3.39	1.51	2.86	6.07	3.46	-19.5
5	5.34	3.84	2.41	6.58	4.54	+5.5
6	3.04	4.03	4.64	5.55	4.31	+5.5
7	3.24	5.97	4.36	ND	4.53	+19.9
8	2.84	4.17	2.99	6.56	4.14	-2.7
P	4.03	3.32	4.62	4.42	4.10	+1.2
GM	5.74	4.42	1.87	3.46	3.87	-7.8
Mean	4.29	4.00	3.23	5.18		
Std. Dev.	1.21	1.54	0.94	1.19		
Coeff. of Var.	28%	38%	29%	23%		
Overall Detection Limit (1.1 µg/m^3)	26%**	28%**	34%**	21%**		

*Samples not analyzed for periods E and H

**Overall detection limit divided by the mean for each period.

TABLE 4-11. Line 6: b_{abs} data ($10^{-6}m^{-1}$).*

Period / Sampler	A	B	C	D	Mean	Mean % Dev
1	34.4	ND	63.3	ND	48.9	+4.1%
2	28.3	87.2	77.1	45.8	59.6	+0.4%
3	ND	101	52.5	63.2	72.1	+9.0%
4	45.7	128	73.0	50.2	74.2	+19.3%
5	43.2	101	63.2	55.5	65.6	+3.1%
6	39.3	ND	55.0	ND	47.2	+4.6%
7	35.7	ND	43.3	52.1	43.7	-5.1%
8	36.3	76.4	53.3	30.4	49.1	-6.1%
P	17.4	86.3	30.4	42.5	44.2	-30.0%
GM	39.5	ND	57.6	33.6	43.6	-5.6%
Mean	35.4	96.6	56.87	46.7		
Std. Dev.	8.0	16.5	13.63	11.0		
Coeff. of Var	23%	17%	24%	24%		
Overall Detection Limit ($96 \times 10^{-6}m^{-1}$)	268%**	98%**	169%**	206%**		

*Periods I and J had values below the overall detection limit. **Overall detection limit divided by the mean for each period.

TABLE 4-12. Line 7: PM-2.5 carbon on quartz filters (µg C/m^3).*

Period	C		D		I		J		Mean		Mean % Dev.	
Sampler	OC	EC	OC	EC	OC	EC	OC	EC	OC	EC	OC	EC
1	16.30	3.15	7.55	1.83	7.43	0.68	9.28	0.20	10.14	1.46	-2.5	+2.3
2	16.84	3.45	6.89	1.68	6.37	0.39	9.42	0.49	9.88	1.50	-7.3	+5.5
3	17.47	2.98	7.27	1.87	6.81	0.20	11.18	0.51	10.68	1.39	+0.6	-6.3
4	16.66	2.41	6.70	1.78	8.20	0.41	10.84	0.41	10.60	1.25	+1.4	-7.6
5	17.96	2.47	7.95	2.58	7.55	0.69	11.56	0.59	11.26	1.58	+7.2	+30.0
6	16.98	2.42	7.04	2.38	5.33	0.57	9.89	0.38	9.81	1.44	-9.1	+7.3
7	17.48	1.93	8.01	2.44	7.69	0.29	12.07	0.49	11.31	1.29	+8.3	-5.6
8	17.76	1.88	7.85	2.44	7.43	0.39	12.05	0.29	11.27	1.25	+7.2	-13.3
P	15.89	3.05	6.17	2.16	6.89	0.36	9.07	0.36	9.50	1.48	-10.2	-2.6
GM	17.07	3.25	7.16	2.13	8.70	0.40	10.38	0.20	10.83	1.49	+4.3	-9.7
Mean	17.04	2.70	7.26	2.13	7.24	0.44	10.57	0.39				
Std. Dev.	0.62	0.52	0.56	0.31	0.90	0.15	1.08	0.13				
Coeff. of Var.	4%	19%	8%	14%	12%	35%	10%	32%				
Overall Detection Limit (0.39 µg/m^3)	2%**	14%**	5%**	18%**	5%**	88%**	4%**	100%**				

*Samples not analyzed for Periods A and B.
**Overall detection limit divided by the mean for each period.

TABLE 4-13. Line 8: PM-2.5 mass ($\mu g/m^3$)*.

Period / Sampler	A	B	C	D	J	Mean	Mean % Dev
1	25.9	ND	48.2	28.2	28.5	32.7	-2.0
2	31.7	63.4	45.8	27.0	33.6	40.3	2.6
3	26.1	64.6	46.1	28.7	32.9	39.7	-0.3
4	28.3	66.7	45.3	27.1	ND	41.8	-1.0
5	29.8	64.4	39.0	27.1	33.7	38.8	-1.2
6	27.0	61.1	46.0	28.0	29.8	38.4	-3.1
7	26.3	65.8	44.7	27.3	28.6	38.5	-4.1
8	26.8	85.5	49.9	29.5	33.4	45.0	+8.9
P	24.5	76.3	43.4	27.5	30.4	40.4	-1.6
GM	ND	ND	49.8	30.4	27.4	35.9	+1.9
Mean	27.4	68.5	45.8	28	31		
Std. Dev.	2	8	3	1	2		
Coeff. of Var.	8%	11%	7%	4%	8%		
Overall Detection Limit ($19\ \mu g/m^3$)	70%**	28%**	41%**	68%**	61%**		

*Samples not analyzed for mass for Period I.
**Overall detection limit divided by mean for each period.

TABLE 4-14. Line 8: PM-2.5 S on Teflon filter by XRF (µg S/m^3).*

Period / Sampler	A	B	C	D	J	Mean	Mean % Dev
1	1.40	ND	2.53	1.67	2.08	1.91	+2.7
2	1.33	2.42	2.49	1.60	2.33	2.03	+2.5
3	1.42	2.46	2.63	1.61	2.35	2.09	+5.7
4	1.36	2.41	2.70	1.48	1.96	1.98	-0.5
5	1.31	2.50	2.55	1.49	2.06	1.98	-0.7
6	1.29	2.20	2.59	1.52	2.07	1.93	-2.7
7	1.32	2.49	2.47	1.58	2.03	1.98	-0.4
8	1.35	2.43	2.70	1.54	2.08	2.02	+1.4
P	1.20	2.21	2.31	1.35	1.93	1.80	-9.6
GM	ND	ND	2.72	1.56	2.15	2.14	+3.2
Mean	1.33	2.39	2.57	1.54	2.10		
Std. Dev.	0.06	0.11	0.12	0.08	0.13		
Coeff. of Var.	5%	5%	5%	5%	6%		
Overall Detection Limit (0.12 µg/m^3)	9%**	5%**	5%**	8%**	6%**		

*Samples not analyzed by XRF for Period I.
**Overall detection limit divided by the mean for each period.

TABLE 4-15. Line 9: PM-2.5 Cl^- on Teflon filters (µg Cl^-/m^3).*

Period / Sampler	C	D	I	J	Mean	Mean % Dev
1	0.04	0.36	0.06	0.01	0.12	+15.8
2	0.02	0.31	0.08	0.05	0.11	+8.3
3	0.00	0.36	ND	0.04	0.13	-30.5
4	0.01	0.38	0.07	0.03	0.12	-18.0
5	0.00	0.24	0.05	0.03	0.08	-44.7
6	0.05	0.38	0.05	0.03	0.13	+42.7
7	0.00	0.26	0.08	0.07	0.10	-9.7
8	0.02	0.27	0.05	0.07	0.10	+5.5
P	0.02	0.30	0.11	0.05	0.12	+14.9
GM	0.01	0.40	0.09	0.05	0.14	+7.9
Mean	0.02	0.33	0.07	0.04		
Std. Dev.	0.02	0.05	0.02	0.02		
Coeff. of Var.	95%	15%	25%	37%		
Overall Detection Limit (Cl^-=0.018 µg/m^3)	150%**	9%**	43%**	75%**		

*Samples not analyzed for Periods A and B.
**Overall detection limit divided by the mean for each period.

TABLE 4-16. Line 9: PM-2.5 $SO_4^=$ on Teflon Filters (µg $SO_4^=/m^3$).*

Period / Sampler	C	D	I	J	Mean	Mean % Dev
1	5.87	4.11	4.77	5.72	5.52	-2.7
2	7.54	4.29	4.91	5.86	6.01	+4.7
3	7.65	4.09		6.35	6.47	+6.4
4	7.25	3.88	4.95	5.90	5.79	+0.7
5	7.08	3.93	4.83	5.88	5.74	-0.1
6	7.21	4.10	4.63	5.57	5.75	+0.1
7	6.88	3.90	4.71	5.82	5.66	-1.4
8	7.42	4.13	4.85	5.95	5.93	+3.1
P	6.46	3.58	4.30	5.01	5.15	-10.3
GM	7.10	4.05	4.94	5.98	5.80	+1.0
Mean	7.05	4.01	4.76	5.80		
Std. Dev.	0.51	0.19	0.19	0.33		
Coeff. of Var.	7%	5%	4%	6%		
Overall Detection Limit ($SO_4^=$ = 0.17 µg/m^3)	2%**	4%**	4%**	3%**		

*Samples not analyzed for Periods A and B.
**Overall detection limit divided by the mean for each period.

TABLE 4-17. Line 9B: Artifact organic carbon on quartz filters (µg C/m^3).*

Period / Sampler	C	D	I	J	Mean	Mean % Dev
1	5.06	2.01	2.38	3.74	5.95	-6.4
2	5.04	2.46	2.55	3.63	5.48	-8.2
3	5.12	2.37	2.64	4.06	5.82	-3.5
4	4.64	2.13	3.44	3.95	5.87	-2.3
5	5.54	2.45	3.33	5.29	6.58	+13.9
6	5.09	2.30	2.38	3.80	5.31	-7.7
7	6.30	2.40	3.41	4.48	6.62	+13.5
8	5.88	2.36	3.38	4.14	6.33	+9.2
P	4.69	2.46	2.56	4.04	5.45	-10.0
GM	5.85	2.47	2.76	4.25	6.49	+1.7
Mean	5.32	2.34	2.88	4.14		
Std. Dev.	0.52	0.15	0.43	0.45		
Coeff. of Var.	10%	6%	15%	11%		
Overall Detection Limit (0.39 µg/m^3)	7%**	5%**	5%**	9%**		

*Samples not analyzed for periods E and H
**Overall detection limit divided by the mean for each period.

TABLE 4-18. Line 10: PM-10 carbon on quartz filters (µg C/m^3)*.

Period	C		D		I		J		Mean		Mean % Dev.	
Sampler	OC	EC	OC	EC	OC	EC	OC	EC	OC	EC	OC	EC
1	19.63	3.99	11.89	2.52	7.67	0.59	12.89	0.59	13.02	1.92	-3.4	-0.5
2	20.07	3.83	11.68	2.99	8.53	0.49	12.07	0.78	13.09	2.02	-2.4	+3.8
3	20.42	3.93	12.44	2.64	8.43	0.41	13.42	0.71	13.68	1.92	+2.0	-5.0
4	22.89	4.65	9.31	2.59	8.61	0.61	13.18	0.91	13.49	2.44	-1.8	+2.5
5	23.47	3.34	11.87	3.44	8.74	0.49	16.09	1.18	15.05	2.11	+10.4	+17.9
6	19.98	2.83	11.23	3.50	7.33	0.48	14.81	0.95	13.34	1.94	-1.9	+5.8
7	22.16	2.49	12.38	3.53	7.40	0.49	13.82	0.68	13.94	1.80	+1.5	-5.4
8	22.89	2.46	11.50	3.22	9.35	0.58	12.82	0.39	14.14	1.66	+4.5	-13.9
P	17.66	3.42	10.51	2.98	7.06	0.44	10.07	0.45	11.74	1.82	-13.4	-13.8
GM	22.98	3.66	12.40	3.26	9.50	0.40	12.85	0.40	14.43	1.93	+7.1	-13.8
Mean	21.2	3.46	11.5	3.07	8.26	0.50	13.20	0.70				
Std. Dev.	1.8	0.67	0.93	0.36	0.81	0.07	1.5	0.25				
Coeff. of Var.	9%	19%	8%	12%	10%	14%	11%	35%				
Overall Detection Limit (0.39 $\mu g/m^3$)	2%**	11%**	3%**	13%**	5%**	78%**	3%**	56%**				

*Data not analyzed for Periods A and B.
**Overall detction limit divided by the mean for each period.

TABLE 4-19. Line 11: PM-10 mass ($\mu g/m^3$).*

Period / Sampler	A	B	C	D	J	Mean	Mean % Dev
1	49.0	ND	69.2	ND	47.2	55.1	+2.5
2	52.6	107.5	79.6	64.6	42.5	69.4	+3.5
3	48.0	114.4	79.4	65.8	47.1	71.0	+5.4
4	51.3	112.9	78.5	61.7	43.6	69.6	+3.2
5	46.2	111.7	72.0	56.6	38.7	65.1	-4.8
6	47.3	116.7	78.0	62.4	39.8	68.8	+0.5
7	46.4	108.1	71.2	57.7	40.7	64.8	-4.3
8	48.1	115.0	78.9	62.9	40.6	69.1	+1.3
P	43.5	ND	67.0	57.6	36.6	51.2	-9.8
GM	48.9	ND	76.1	68.3	39.7	58.2	+2.1
Mean	48.1	112.3	75.0	62.0	41.7		
Std. Dev.	2.5	3.5	4.7	4.0	3.5		
Coeff. of Var.	5%	3%	6%	6%	8%		
Overall Detection Limit ($9.9\ \mu g/m^3$)	21%**	9%**	13%**	16%**	24%**		

*Samples not analyzed for mass for Period I.
**Overall detection limit divided by the mean for each period.

TABLE 4-20. Line 11: PM-10 Fe on Teflon filter by XRF ($\mu g/m^3$).*

Period / Sampler	A	B	C	D	J	Mean	Mean % Dev
1	1.49	ND	2.09	ND	0.66	1.41	+3.0
2	1.48	3.64	2.24	2.48	0.64	2.10	+5.4
3	1.53	3.86	2.56	2.34	0.74	2.21	+9.2
4	1.49	3.93	2.27	2.07	0.67	2.09	+4.2
5	1.33	4.09	1.85	1.73	0.61	1.92	-6.5
6	1.77	3.64	2.36	2.30	0.68	2.15	+10.1
7	1.28	3.80	1.91	1.72	0.55	1.85	-10.0
8	1.33	4.03	2.10	2.20	0.58	2.05	-0.7
P	1.21	ND	1.69	1.84	0.62	1.34	-12.0
GM	1.29	ND	1.99	1.98	0.63	1.47	-4.7
Mean	1.42	3.86	2.08	2.07	0.64		
Std. Dev.	0.16	0.16	0.20	0.26	0.05		
Coeff. of Var.	11%	4%	10%	13%	8%		
Overall Detection Limit ($0.3\ \mu g/m^3$)	4%**	1%**	2%**	2%**	6%**		

*Samples not analyzed by XRF for Period I.
**Overall detection limit divided by the mean for each period.

TABLE 4-21. Line 12: PM-10 $SO_4^=$ by IC on Teflon filters ($\mu g/m^3$).*

Period / Sampler	C	D	I	J	Mean	Mean % Dev
1	8.40	5.35	5.65	7.46	6.71	+0.9
2	8.81	5.41	5.59	7.80	6.90	+3.4
3	8.94	5.30	6.36	8.41	7.25	+8.6
4	8.59	5.01	5.71	7.83	6.78	+1.4
5	8.16	5.12	5.64	7.69	6.65	-0.2
6	8.75	5.29	ND	7.68	7.24	+3.4
7	8.30	5.00	5.50	7.90	6.67	-0.3
8	4.73	5.33	5.63	7.55	5.81	-10.3
P	7.74	4.68	5.20	6.86	6.12	-8.2
GM	8.48	5.10	5.84	7.86	6.82	+2.1
Mean	8.09	5.16	5.68	7.70		
Std. Dev.	1.17	0.21	0.29	0.37		
Coeff. of Var.	14%	4%	5%	5%		
Overall Detection Limit ($SO_4^=$ = 0.17 $\mu g/m^3$)**	2%***	2%***	3%***	2%***		

*Samples not analyzed for Periods A and B.
**No dynamic blanks were analyzed for line 12, assuming them to be the same as line 9.
***Overall detection limit divided by the mean for each period.

TABLE 4-22. Line 12: PM-10 Cl^- on Teflon filters ($\mu g/m^3$).*

Period / Sampler	C	D	I	J	Mean	Mean % Dev
1	0.22	2.49	0.10	0.13	0.74	+6.3
2	0.20	2.49	0.09	0.12	0.72	-1.9
3	0.20	2.50	0.13	0.12	0.74	+8.7
4	0.20	2.47	0.10	0.15	0.73	+7.0
5	0.19	2.10	0.07	0.12	0.62	-12.0
6	0.21	2.53	ND	0.13	0.96	+5.3
7	0.16	1.99	0.08	0.13	0.59	-12.6
8	0.17	2.27	0.09	0.13	0.66	-6.9
P	0.22	2.07	0.12	0.14	0.64	+6.7
GM	0.19	2.41	0.11	0.12	0.72	+0.6
Mean	0.20	2.33	0.10	0.13		
Std. Dev.	0.02	0.20	0.02	0.01		
Coeff. of Var.	10%	9%	20%	8%		
Overall Detection Limit (Cl^- = 0.018 $\mu g/m^3$)**	9%***	1%***	18%***	14%***		

*Samples not analyzed for Periods A and B.
**No dynamic blanks were analyzed for line 12, assuming them to be the same as line 9.
***Overall detection limit divided by the mean for each period.

chromatography (IC). Table 4-5 shows the results. The overall detection limit, expressed as a percentage of the mean concentration for the study is 16 percent. Five data points are more than 16 percent different from the mean (17 percent to 21 percent). However, since they are for different samplers and in different directions, they indicate no bias for the samplers. The coefficient of variability was consistently below the percent overall detection limits, generally about 9 percent.

- Line 2. A sodium carbonate-impregnated Whatman-41 filter, which had a Teflon prefilter, was used to determine SO_2. The prefilter removed particulate sulfate while the Whatman filter adsorbed sulfur dioxide as sulfate, which was analyzed by IC. Table 4-6 shows the results. Although there was significant scatter at low concentration, the coefficient of variation is generally 10-20 percent. No sampler bias was observed, although nine data points varied more than 20 percent from the mean. The detection limit for SO_2 is 16 percent of the mean value for the study. The coefficients of variability were about the same as the percent overall detection limit for each period. Again, the large variability was due to very low concentrations.

- Line 3. A nylon filter was used to quantitatively collect PM-2.5 particulate nitrate. This filter was extracted and nitrate measured by IC. Table 4-7 shows the results. The coefficient of variation remained below 11 percent. No sampler bias was observed, only one data point (Sampler 2, Period G) was more than 20 percent from the mean. The detection limit for PM-2.5 NO_3^- was 23 percent of the mean value for this study. The values for Periods E, H, I and J were less than twice the detection limit.

- Line 4. A nylon filter was used to quantitatively collect both PM-2.5 particulate and gas-phase nitrate. This was extracted and nitrate measured by IC. Table 4-8 shows the results. The coefficients of variation are generally about 10 percent. No sampler bias was observed, although three data points varied by more than 20 percent from the mean. The detection limit for these species was 20 percent of the mean value for the study. The values for Periods E, H and I were less than twice the detection limit.

- Line 5. Line 5 contained the oxalic acid-coated denuder in position 5A above an oxalic acid-impregnated quartz fiber filter in position 5B. The oxalic acid-coated denuder tube removed ammonia and was later extracted with water and analyzed for ammonium by a colorimetric technique. Table 4-9 shows the results. There is considerable scatter in the data, the coefficient of variation ranged from 30 to 60 percent. The relatively low concentrations (most of the values for periods F, G, H and I are less than twice the detection limit), combined with low flow rate, contribute substantially to this scatter. In addition, since this was also a training period, technicians had trouble in properly installing the denuders. With the denuder removed, the nut of the fitting that held the top of the denuder had a tendency to unscrew and fall off, releasing two small ferrules in the process. Technicians often did not notice the ferrules and replaced just the nut, or only one ferrule. In addition, the ferrules were sometimes placed in the reverse order or upside down. These problems were often not flagged because the technicians did not know of the error. Flagged data involving ferrules were removed. Also, there does appear to be a statistical bias for Sampler 5: it is consistantly about two standard deviations higher than the mean.

All technicians were alerted to tighten the nut after removing the denuder to prevent the nut and ferrules from vibrating off. They were also trained on the proper insertion of the nuts and ferrules and advised to check for it during each denuder change. This training eliminated the problem during SCAQS.

Since it was in the same line as the denuder, the ferrule problems also affected the data from Filter 5B. This was an oxalic-acid-impregnated quartz filter that quantitatively collected ammonium after the ammonia had been removed. It was extracted in water and analyzed colorimetrically. Table 4-10 shows the results. Again, there is considerable scatter with a coefficient of variation of typically 30 percent with these values corresponding to the percent overall detection limits. All of the reasons for erratic results mentioned for the ammonia denuder apply. In addition, since people exhale fairly high concentrations of ammonia, there is more chance of contamination during handling. No sampler bias was observed, including Sampler 5, which showed a positive bias for ammonia. The steps mentioned above concerning the proper use and tightening of the ferrules should reduce variability.

- Line 6. A Nuclepore filter was analyzed for b_{abs} by an absorption technique. A flow rate of 9 lpm was used for Periods A-D. Since the flows dropped during sampling indicating that the filters were becoming overloaded, the flow was lowered to 5 lpm for Periods I and J. Table 4-11 shows the results. There is considerable scatter in the data, primarily due to variability of the initial absorbance. This value was measured only for lab blanks and not for each filter, thus the initial absorbance had to be assumed. The filters were also very light in color, although often loaded to or near to capacity. The values for Periods I and J were all below the overall detection limit and thus are not reported. This combination of effects could explain the range of coefficients of variation, from 23 percent to 34 percent. No sampler bias was observed. The problem of initial absorbance is being solved by the preanalysis of each filter to be used in the winter SCAQS study.

- Line 7. A quartz filter was analyzed for PM-2.5 elemental and organic carbon by a thermal volatilization/combustion technique. Table 4-12 shows the results. The organic carbon precision is quite good, while that of the elemental carbon has considerably more scatter. Sampler bias was not observed for either species; comparing organic carbon to elemental for each sampler also did not show a bias. For Periods I and J the elemental carbon are less than five times the analytical detection limit for all samplers. Again, the coefficients of variation agree with the percent overall detection limits. The highest coefficients of variation (35 percent and 32 percent) are for these periods.

- Line 8. A tared Teflon filter collected PM-2.5 samples for mass and elemental analysis. Table 4-13 shows the results for the mass analysis. The coefficient of variation was low, ranging from 4 to 11 percent. Since it would be impractical to look at all the elements analyzed by XRF, sulfur was chosen as a major component measured in the fine particulate sample. Table 4-14 gives the values for sulfur. The coefficients of variation are low and nearly all are 5 percent. No sampler bias was noticable for either PM-2.5 mass or sulfur and all data points were within 15 percent of the mean.

Line 9. Line 9 contained two filters: a Teflon filter for ion analysis in Position 9A and a quartz fiber filter for artifact organic carbon in Position 9B. The Teflon filter was extracted and analyzed for sulfate and chloride by ion chromatography. It was also analyzed for ammonium and nitrate; however, since these species are more appropriately collected using denuder technology, they will not be discussed further. Table 4-15 shows the results for chloride (Cl^-) and Table 4-16 for sulfate ($SO_4^=$). The sulfate is very consistent between samplers, the coefficient of variation ranging between 4 and 7 percent. No bias between samplers was observed; all of the data points were within 10 percent of the mean. There was more variation of chloride, as would be expected for a PM-2.5 sample since only a tail of the distribution is collected. The concentrations, except for Period D are very low: less than 0.1 $\mu g/m^3$. The best sampler comparison is therefore for the day of relatively high concentration, where the coefficient of variation was 16 percent. No sampler bias was observable for this period, all data points were within 15 percent of the mean. The coefficients of variation were all in relative agreement with the percent overall detection limits.

The 9B quartz filter below the 9A Teflon filter was used to estimate the positive collection artifact of organic vapors on the filter medium. It was analyzed for organic carbon by thermal volatilization/combustion. The values (see Table 4-17) have the coefficients of variation ranging between 6 percent and 15 percent. As with the ions, no sampler bias was seen and all data points were within 14 percent of the mean.

- Line 10. A quartz filter was used to measure PM-10 organic and elemental carbon. Since there is very little carbon larger than 2 µm, the results shown in Table 4-18 are very similar to those of the PM-2.5 carbon. No bias was observed, organic carbon was always within 15 percent of the mean with coefficients of variation about 10 percent. There was considerable variation of the elemental carbon, which had coefficients of variation from 12 percent to 35 percent due to the low concentrations, as is borne out in the percent overall detection limits.

- Line 11. A tared Teflon filter was used to measure PM-10 mass and PM-10 elements by XRF. Iron was chosen as being representative of the larger particles that are mainly soil-derived dust. Table 4-19 shows the results for mass and Table 4-20 the results for iron. Mass is tightly distributed due to the higher loadings; the coefficient of variation ranged between 3 and 18 percent. No significant bias was observed, all data points were within 10 percent of the mean. The iron was also tightly distributed for each sample interval, the coefficient of variation ranging between 4 and 13 percent. Again, no sampler bias was observed.

- Line 12. A Teflon filter was used for ion analysis. The results, shown in Table 4-21 for sulfate and Table 4-22 for chloride, are very similar to those obtained by Line 9 sampling PM-2.5 aerosol. Sulfate is distributed tightly about the mean, the coefficients of variation mostly around 5 percent. Most of the sulfate was less than 2.5 μm in size. The PM-10 chloride concentrations were generally an order of magnitude higher than those for PM-2.5. For this reason, there was less scatter, the coefficients of variation ranging from 8 to 20 percent. The 20 percent variation was for Period I when the Cl^- concentrations were less than half the average blank value. Sampler bias was not observed for chloride or sulfate.

5. REFERENCES

Sonoma Technologies Inc. (1986): Southern California Air Quality Study (SCAQS) suggested program plan Sonoma Technology Inc. Ref. 1095050-605. Contract No. A4-114-32, Santa Rosa, California.

Ferm, M. (1979): Method for determination of atmospheric ammonia. Atmos. Environ., 13:1385.

Shaw, R.W., Jr., R.K. Stevens, J. Bowermaster, J.W. Tesch, and E. Tew (1982): Measurements of atmospheric nitrate and nitric acid: The denuder difference experiment. Atmos. Environ., 16:845-853.

APPENDIX A

Memoranda related to SCAQS schematics and layout drawings.

4 November 1986

26 November 1986

12 January 1987

Memoranda related to testing protocols.

6 February 1987

11 March 1987

Protocol for SCAQS B Intensive Days

AeroVironment Inc.

FILE COPY

MEMORANDUM

Please Reference: 91034G

To: Distribution

From: D R. Fitz

Date: November 4, 1986

Subject: SCAQS Aerosol Sampler Schematic

Enclosed is a schematic, a layout drawing and a parts list for the sampler. Please relay any comments you may have as soon as possible so that we may finalize the design. Some of the features are:

- All sample holders in one cabinet; pumps in another.
- Stilling chambers 5 and 38 are circular with taps near the outer perimeter, equally spaced.
- The filter holders set into slots on shelves for calibration checks and raise into position for sampling.
- The filter holders connect to the sample line with Ultra-Torr fittings and to the vacuum line with quick connects. No wrenches are necessary and they cannot be installed backwards.
- The NH_3 denuder has a purge casing to warm it slightly above ambient temperature to prevent condensation.
- The PM-10 sample ports are funnel shaped to allow gradual acceleration.
- By-pass ports will be available if necessary (not shown).
- The manifolding for the nitrogeneous species component is Teflon or acid washed pyrex where necessary.

DRF:sr

Distribution: B. Appel (AIHL)
L. Ashbaugh (CARB)
D. Blumenthal (STI)
G. Cass (Cal Tech)
M. Chan (AV)
R. Countess (EMSI)
S. Hering (UCLA)
W. John (AIHL)
D. Lawson (CARB)
J. Watson (DRI)
G. Wolfe (GM)

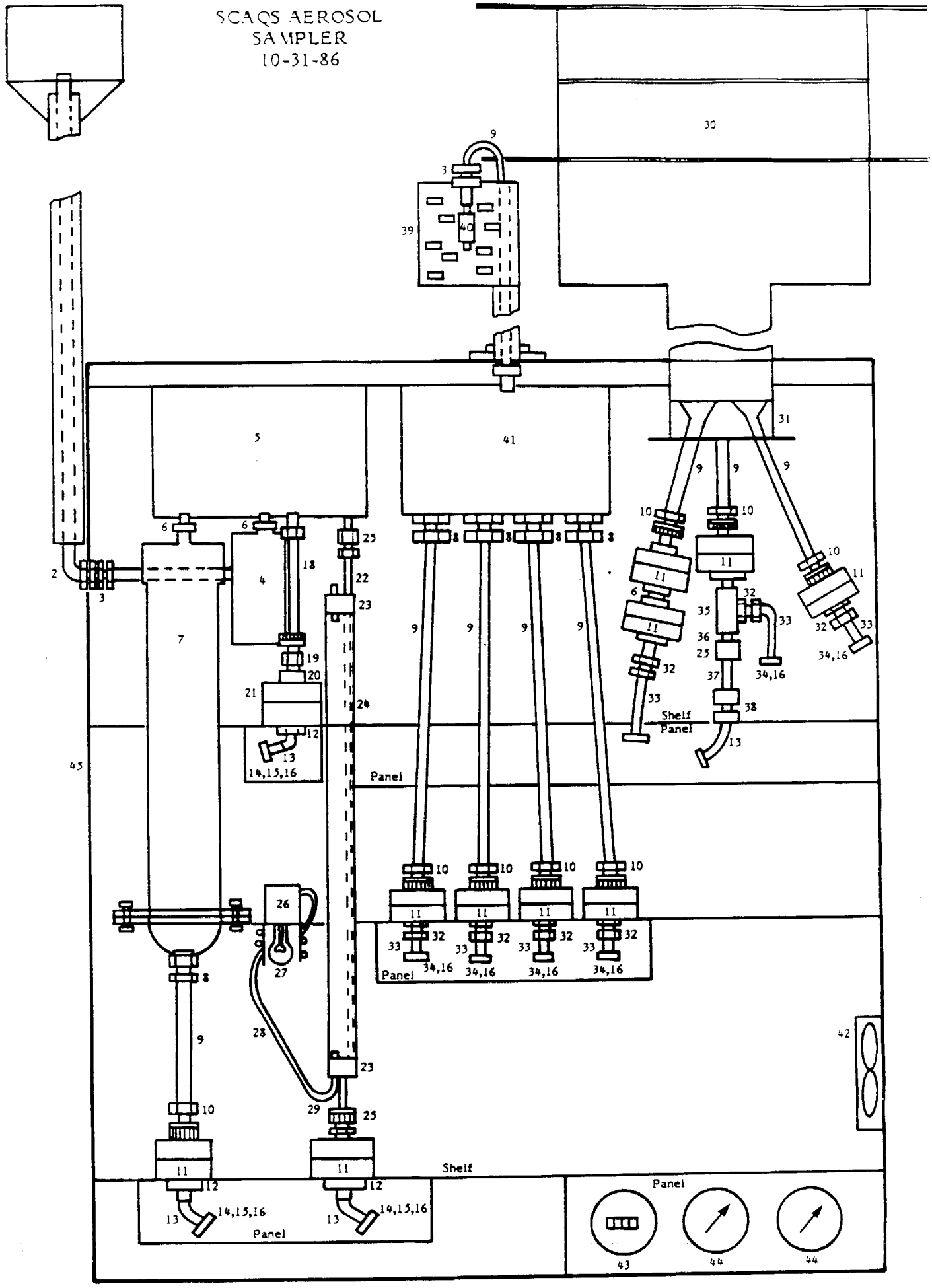
SCAQS AEROSOL
SAMPLER
10-31-86
Panel
Shelf
Panel
Panel
Shelf
Panel
Panel

SCAQS AEROSOL SAMPLER PARTS LIST (91034G)

1. Poly ethylene bucket with support
2. Acid washed pyrex tubing, 1/2" OD
3. Drilled through 1/2" brass Swagelock bulkhead union (BR-810-61)
4. AIHL design cyclone (manufactured by Cal Tech), Teflon coated
5. Stilling chamber (manufactured by Cal Tech), Teflon coated
6. Pipe nipple (3/8" x close)
7. Nitric acid denuder (manufactured by Cal Tech)
8. 3/8" pipe x 1/2" tube male Swagelock adapter (BR-810-1-6)
9. Stainless steel tubing, 1/2" OD
10. 1/2" tube x 3/8" pipe Ultra-Torr male adapter (BR-8-UT-1-6)
11. Gelman 47 mm filler holder, Al, cat. number 1235
12. 3/8" pipe x 1/4" tube Swagelock male elbow (BR-400-2-6)
13. 1/4" Bev-a-Line tubing
14. 1/4" tube x 1/8" pipe Swagelock bulkhead quick connector (BR-QC4-S-400 and QC4B1-2PM)
15. 1/4" x 1/8" pipe bushing
16. 1/4" pipe x 3/8" hose Swagelock female hose connector (BR-4-FHC-65)
17. 3/8" pipe x 1/4" tube Swagelock male adapter, drilled thru (BR-400-1-6)
18. 1/4" Teflon tubing
19. 1/4" pipe x 1/4" tube Ultra-Torr male connector, drilled thru (BR-4-UT-1-4)
20. 1/4" x 3/8" bushing, Br
21. Teflon filter holder (Savillek 6-47-6T)
22. 6mm OD x 2' glass tube
23. Number 3 two-hole rubber stopper
24. 3/4" PVC pipe
25. 1/4" pipe x 1/4" tube Ultra-Torr male connector (BR-400-1-4)
26. Aquarium pump
27. Light bulb with holder
28. Tygon tubing
29. 5mm OD glass "L"
30. 10 µm inlet (GMW-254-1)
31. Aluminum adapter plate (custom by AV)
32. 3/8" pipe x 3/8" tube Swagelock male connector (BR-600-1-6)
33. 3/8" Bev-a-Line tubing
34. 3/8" tube x 1/4" pipe Swagelock bulkhead connector (QC6-S-600 and QC6-B1-4PM)
35. 3/8" Br male run T
36. 3/8" x 1/4" Br bushing
37. 1/4" DNPH trap
38. 1/4" tube Ultra-Torr union (BR-4-UT-6)
39. Inlet stilling chamber (AV design) with support
40. Sensidyne Model 18 cyclone
41. Stilling chamber
42. Fan

43. Elapsed timer
44. Vacuum gauge
45. Steel cabinet 30" high x 12" deep x 30" wide

NOT SHOWN

A Vacuum Mainfolds - Consists of 1/2" steel pipe 'T's connected by 1/2" x close pipe nipples with 1/2" pipe x 3/8" hose (BR-6-HC-1-4) connectors into arms of 'T's. The various orifices (BGI custom) screw into the hose connectors.

B Flourescent Light

C Pump Box - Similar cabinet attached to back of sampler cabinet with two pumps, 1 1/2 HP and 3/4 (W.W. Graingers 4Z337 and 7Z782) 3/4 HP pump used with nitrogeneous species filters and PM10 and 2.5 quartz fillers, 1 1/2 HP for all others.

D Vacuum actuated normally closed switch for each of the two vacuum manifolds.

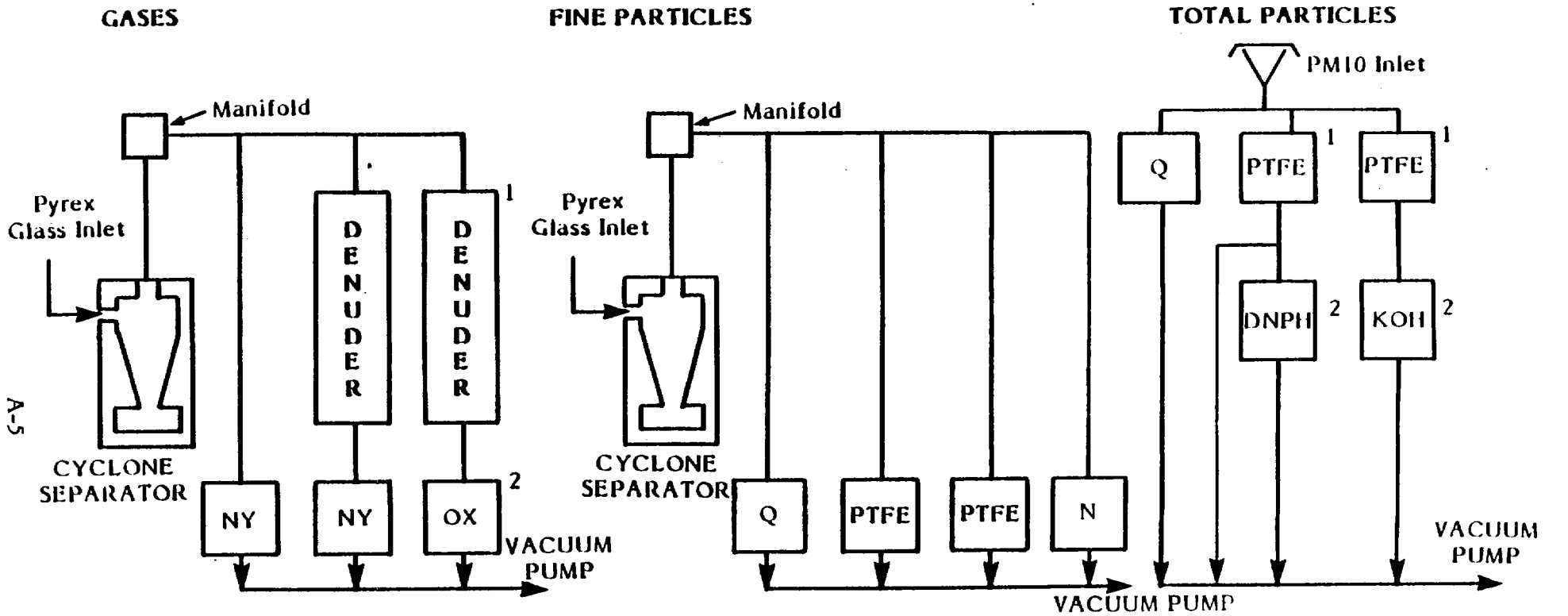

A-5

GASES	FINE AEROSOL		TOTAL AEROSOL & TREATED FILTERS		
• HNO_3	• EC • TC	• Mass • Trace Elements By XRF	• Ionic Species $SO_4^=$ NH_4^+ NO_3^- H^+	• EC • TC	1 • Mass • Trace Elements 2 • Carbonyes

1. NH_3
2. NH_4^+

1
• Ionic Species
$SO_4^=$
NH_4^+
NO_3^-
H^+

2
SO_2

N = Nuclepore
NY = Nylon Filter
OX = Oxalic Acid Impregnated Glass Fiber Filter
Q = Quartz Fiber Filter
PTFE = Polytetran Fluoroethylene Filter
KOH = Potassium Hydroxide Filter
DNPH = Dinitrophenylhydrazine Filter

FIGURE 1. Optional gas and size-selective aerosol sampling system design with denuder systems.

4. Procurement of other equipment, such as EAAs, OPCs and nephelometers will begin.

5. Preparation of SOPs for the operation of B sites will begin.

6. AV will work with STI on the design of a data acquisition system for the B sites.

CRITICAL ISSUES

1. The approach for sampling and analysis of H_2O_2 needs to be established.

2. CARB should issue contracts for procuring equipment for the B sites.

3 The source or sources of equipment for monitoring routine air quality and meteorological parameters at San Nicholas Island and Long Beach and the party responsible for providing this equipment to AV should be indentified.

4. Decisions should be made regarding solar radiation measurements during SCAQS.

Please reference: 91034G

MEMORANDUM

To: Distribution

From: Dennis Fitz

Date: 26 November 1986

Subject: Comments and Questions
SCAQS Aerosol Sampler Schematic memo of 11/4/86

I have received questions and comments from most of you and have summarized them below along with my answers and rebuttals. If further questions or comments are generated please direct them to me as soon as possible.

Comment: Will sulfur dioxide be retained by the aluminum filter holder?

Rebuttal: After performing a literature search it is likely that the Gelman aluminum filter holder would not be suitable, especially for short term sampling (R.L. Byers and J.W. Davis, 1970: Sulfur dioxide adsorption and desorption on various filter media, JAPCA, 20, 236-238.

Comment: Use an open face nylon filter to determine total nitrate and subtract fine particulate nitrate to yield coarse nitrate.

Rebuttal: Using the nitrate from the PM10 Teflon filter and substracting the nitrate on the PM-2.5 Teflon filter would yield coarse nitrate if coarse nitrate was not volatile and the nitrate lost from the Teflon filters due to volatility was the same for both filters. Since this method involves several assumptions, the design will be altered to include an open face nylon filter.

Comment: Flow rates and detection limits were not specified.

Rebuttal: The design schematic included only the sampling hardware; these two concerns are addressed in a separate memo.

Comment: Quartz back-up filters behind the Teflon ones used for ionic species determination would be useful as an indication of the magnitude of carbon sampling artifacts.

Rebuttal: This would involve no hardware change; the filters could be run back-to-front with little chance of cross-contamination.

Comment: The long inlet and 90° bend on the sampling apparatus for nitrogenous species may remove some of the nitric acid.

Rebuttal: A inlet is necessary for rain protection and to allow sampling from clean air above the sampler. The inlet tube is acid-washed pyrex and losses of nitric acid have been shown to be negligible. A 90° turn is unavoidable and the eddies generated would not lead to significant losses, especially when compared to the flow patterns in the cyclone.

Comment: It needs to be shown that the sampling in the PM10 manifold gives equivalent samples.

Rebuttal: This will be shown in the sampler prototype testing, a subject of a future memo. The manifold is symmetric and the flows will be equal, using by-pass lines if necessary.

Comment: Why not Teflon and glass manifolding for species other than nitrogenous?

Rebuttal: I am not aware of any testing which shows that this is necessary.

Comment: What are the cut points of the cyclone?

Answer: Nominally 2.5 μm.

Comment: Why use Gelman filter holders after HNO_3 and not Savillex?

Answer: There is not nitric acid in the air stream at that point to cause a problem.

Comment: Insects which penetrate the inlets may invalidate filters.

Rebuttal: Teflon screens will be incorporated into the fine aerosol and PM10 inlets to prevent entrainment of insects. Due to possible losses of nitric acid it is not prudent to place a screen in that equipment; no carbon measurements are made on these filters (nitrate in insects is probably negligible).

Comment: What type of Teflon is used to coat the inlet and manifold?

Answer: Perfluoroalkoxy (PFA)

Comment: Does the Sensidyne model 18 cyclone cut at 2.5 μm with 115 lpm flow?

Answer: No, the model 18 was in error; it should be the model 240.

Comment: What is the aquarium pump and light bulb for?

Answer: To provide slightly warmed air about the ammonia denuder to prevent condensation.

Comment: Why bypass the air around the DNPH trap?

Answer: A 40 lpm flow is required throught the Teflon pre-filter but the trap can only sample 1-2 lpm.

Comment: Why a bucket over the AIHL cyclone inlet?

Answer: Prevents rain from entering and it is economical.

Comment: What is the nitric acid denuder coating?

Answer: Magnesium oxide

Comment: The nylon filter is for determining b_{abs}.

Comment: Inline filters usually give nonuniform particulate deposits, heavier at the center.

Rebuttal: This seems likely to me although I have not heard other reports of this being a problem. A possible solution would be to use Savillex open face holder with Teflon receptacles (PN4750) to induct the air from the manifold to the filter. This is sketched in the following figure. I am not aware of any proven design of an inline open-face type holder and the design suggested would require rigorous testing under field conditions. The need for such a redesign will be dependant on comments received.

Distribution:

B. Appel (AIHL)
L. Ashbaugh (CARB)
D. Blumenthal (STI)
G. Cass (CalTech)
M. Chan (AV)
R. Countess (EMSI)
S. Hering (UCLA)
W. John (AIHL)
D. Lawson (CARB)
J. Watson (DRI)
K. Knapp ((EPA)
G. Wolff (GM)

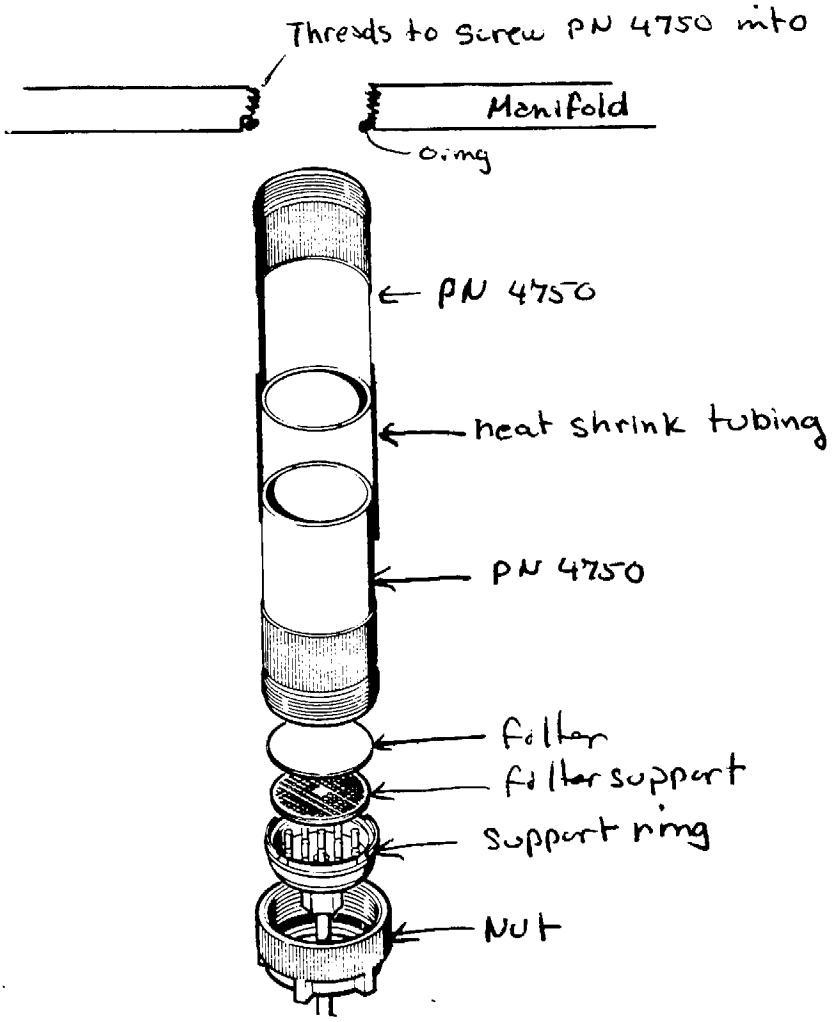
Threads to screw PN 4750 into
Manifold
o-ring
PN 4750
heat shrink tubing
PN 4750
filter
filter support
support ring
NUT

91051

MEMORANDUM

To: Distribution

From: D.R. Fitz

Date: January 12, 1987

Subject: SCAQS Aerosol Sampler Schematic Near Final Design

Enclosed is the latest schematic, layout drawing and parts list for the SCAQS Aerosol Sampler. Several issues still need to be addressed.

- o Filter uniformity - the use of 25mm filters to improve uniformity has been ruled out because 47mm ones are necessary for XRF analysis. S. Hering has suggested a conical adapter for the Gelman 47mm holders, the cost implications are being investigated.

- o The use of 25mm quartz fiber filters would aid in the detection limits improvement for EC, which is marginal, especially for the background. The use of conical adapters for these holders would then need to be investigated. Alternately, a larger aliquot of filter could be used in the analysis.

- o Should quartz backup filters be placed behind the Teflon or quartz filters for estimating filter adsorption artifacts; or should both be done? The Teflon-quartz combination could done filter to filter but the quartz-quartz combination would probably require another holder.

Several changes in the design have been made since the memo of November 4th.

- o The DNPH tube/filter has been dropped since that device will operate on a separate schedule.

- o Provision has been made for an open face Teflon holder with a nylon filter for collecting total nitrate.

- o The impregnated filter for SO_2 has been moved from the PM-10 inlet, a Teflon open face filter holder is now used. This was done due to the reported uptake of SO_2 by aluminum surfaces.

- o Three 3/4 HP carbon vane pumps are now used. This allows great flexibility in the distribution of the power load. A pump is now used for each sampling inlet so a single pump failure will only bring down one component of the sampling system.

- o Absolute filters have been added to the exhaust of the carbon vane pumps.

This is the final memo concerning sample design prior to construction of a prototype. Please give me any comments as soon as possible so that they may be incorporated into prototype testing.

pe

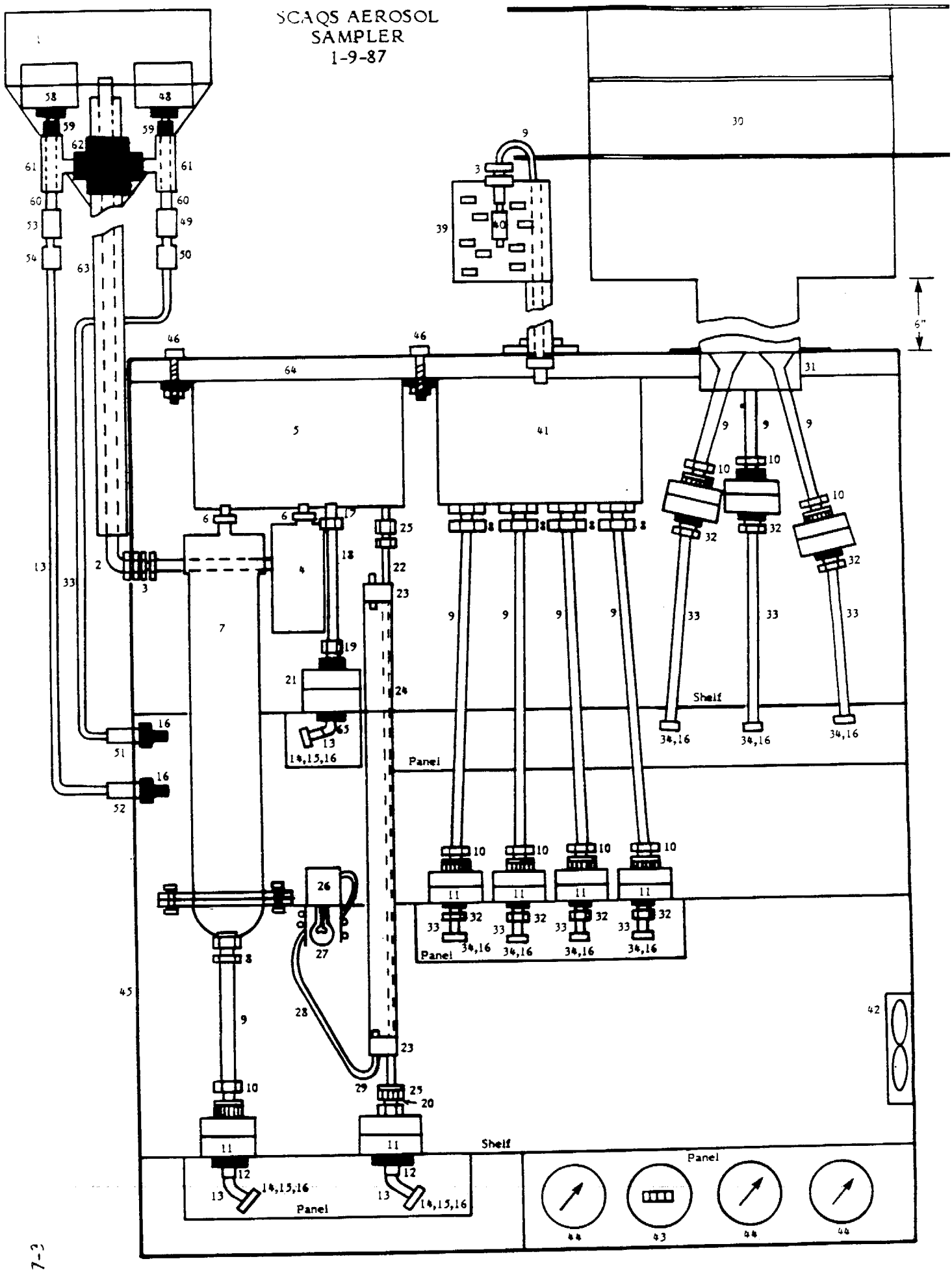
SCAQS AEROSOL
SAMPLER
1-9-87
Shelf
Panel
Panel
Shelf
Panel
Panel
6"

SCAQS AEROSOL SAMPLER PARTS LIST (91051)

1. Polyethylene bucket with support
2. Acid washed pyrex tubing, 1/2" OD
3. Drilled through 1/2" brass Swagelock bulkhead union (BR-810-61)
4. AIHL design cyclone (manufactured by Cal Tech), Teflon coated
5. Stilling chamber (manufactured by Cal Tech), Teflon coated
6. Screw thread with "O" ring
7. Nitric acid denuder (manufactured by Cal Tech)
8. 3/8" pipe x 1/2" tube male Swagelock adapter (BR-810-1-6)
9. Stainless steel tubing, 1/2" OD
10. 1/2" tube x 3/8" pipe Ultra-Torr male connector (BR-8-UT-1-6)
11. 47 mm filler holder, Al, (Gelman cat. number 1235)
12. 3/8" pipe x 1/4" tube Swagelock male elbow (BR-400-2-6)
13. 1/4" Bev-a-Line tubing
14. 1/4" tube x 1/4" pipe Swagelock bulkhead quick connector (BR-QC4-S-400 and QC4-B1400)
15. 1/4" tube x 1/4" male pipe adapter (BR-4-TA-1-4)
16. 1/4" pipe x 3/8" hose Swagelock female hose connector (BR-4-FHC-65)
17. 3/8" pipe x 3/8" tube Swagelock male connector, drilled thru (BR-600-1-6)
18. 3/8" Teflon tubing
19. 3/8" x 3/8" Ultra-Torr union, drilled through (BR-6-UT-6)
20. 1/4" x 3/8" bushing, BR
21. 47mm Teflon filter holder (Savillek 6-47-6T)
22. 6mm OD x 2' glass tube
23. Number 3 two-hole rubber stopper
24. 3/4" PVC pipe
25. 1/4" pipe x 1/4" tube Ultra-Torr male connector (BR-400-1-4)
26. Aquarium pump
27. Light bulb with holder
28. 1/4" Tygon tubing
29. 5mm OD glass "L"
30. 10 ¢m inlet (GMW-254-1) with DRI modification to prevent leakage
31. Aluminum adapter plate (custom by AV)
32. 3/8" pipe x 3/8" tube Swagelock male connector (BR-600-1-6)
33. 3/8" Bev-a-Line tubing
34. 3/8" tube x 1/4" pipe Swagelock bulkhead quick connector (QC6-S-600 and QC6-B1-4PM)
35. Removed
36. Removed
37. Removed
38. Removed
39. Inlet stilling chamber (AV design) with support
40. Sensidyne Model 240 cyclone
41. Stilling chamber
42. Fan
43. Elapsed timer
44. Vacuum gauge
45. Aluminum cabinet 36" high x 12" deep x 30" wide
46. 1/4" x 1 1/2" bolt with nuts and washers
47. 1/2" pipe x 1/2" tube bulkhead male connector (BR-810-11-8)

48. Two stage open face 47mm filter holder, 1/4" male pipe outlet (Savillex-0-472-4N)
49. 1/4" female pipe stem (BR-QC6-S-4PF)
50. 3/8" tube body (BR-QC6-B-600)
51. 3/8 tube x 1/4" male pipe bulkhead connector (BR-600-11-4)
52. 1/4" tube x 1/4" male pipe bulkhead connector (BR-600-11-4)
53. 1/4" female pipe stem (BR-QC4-S-4PF)
54. 1/4" tube QC body (BR-QC4-B-400)
55. 1/2" x 1/2" bulkhead union (BR-810-61) not shown, for vacuum line
56. 3/8" pipe x 1/2" tube male connector (BR-810-1-6) not shown, for vacuum system
57. 1/2" pipe x 1/2" tube bulkhead male connector (BR-810-1-6) not shown, for vacuum system
58. Teflon open face 47mm filter holder 1/4" male pipe outlet (Savillex 0-471-4N)
59. 1/4" pipe coupling, PVC
60. 1/4" x 6" pipe nipple, galvanized steel
61. 1/2" branch tee, PVC
62. 3/4" cross, PVC
63. 3/4" schedule 80, PVC pipe
64. 1" thick wood insulation
65. 1/4" pipe x 1/4" tube female elbow (BR-400-8-4)

NOT SHOWN

A Vacuum Mainfolds - Consists of 1/2" steel pipe 'T's connected by 1/2" x close pipe nipples with 1/2" pipe x 3/8" hose (BR-6-HC-1-4) connectors into arms of 'T's. The various orifices (BGI custom) screw into the hose connectors.

B Flourescent Light

C Pump Box - Similar cabinet, attached to back of sampler cabinet withthree 3/4 HP carbon vane pumps (W.W. Graingers 4Z337).

D Vacuum actuated normally closed switch for each of the two vacuum manifolds.

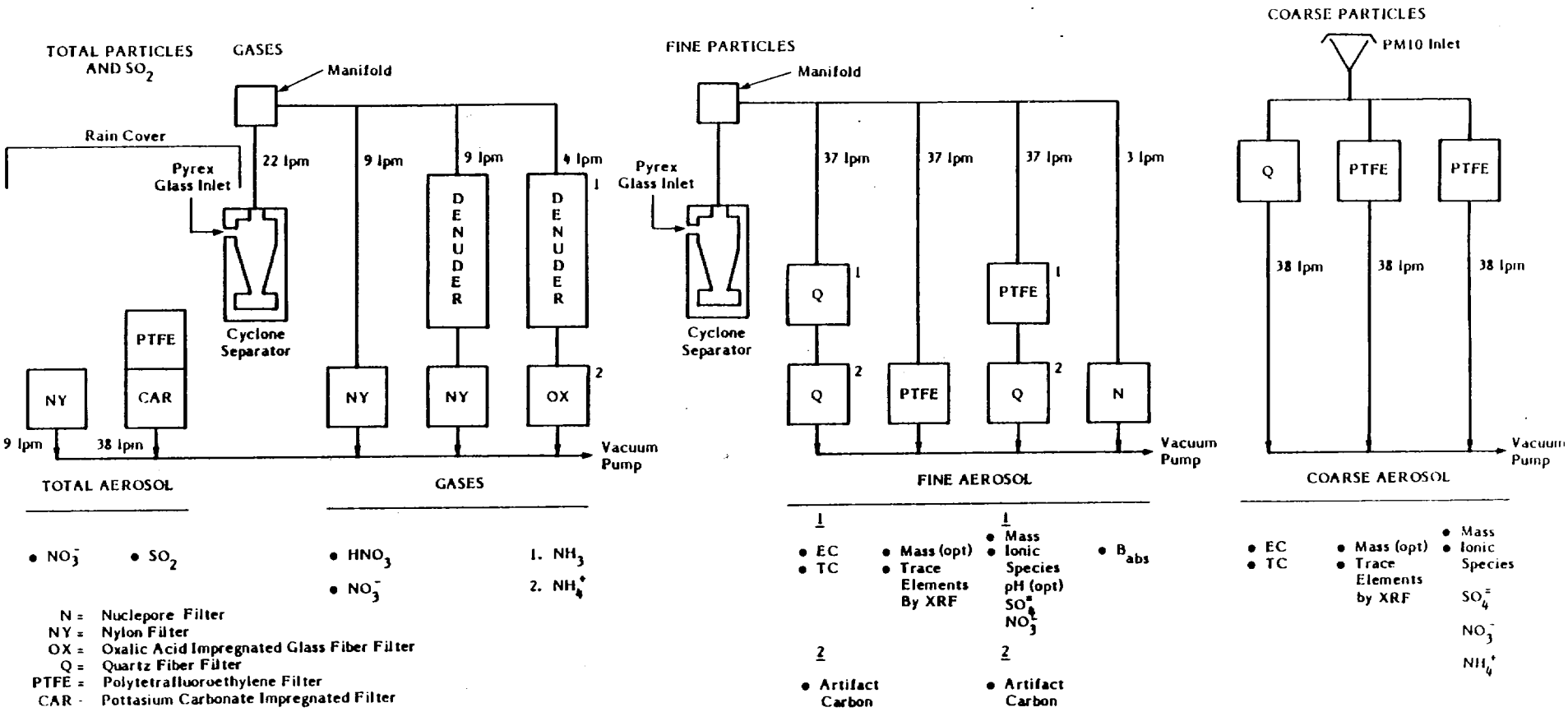

FIGURE 3-1. Gas and size-selective aerosol sampling system.

Distribution:

B. Appel (AIHL)
L. Ashbaugh (CARB)
D. Blumenthal (STI)
G. CAss (Caltech)
M. Chan (AV)
R. Countess (EMSI)
S. Hering (UCLA)
W. John (AIHL)
K. Knapp (EPA)
D. Lawson (CARB)
W. Pierson (Ford)
J. Watson (DRI)
G. Wolff (GM)

Please reference: 91051

MEMORANDUM

To: Distribution

From: Dennis Fitz

Date: 6 February 1987

Subject: SCAQS Sampler Performance Testing

PROTOTYPE TESTING

- Precision Testing

  In our proposal to the CARB, collocated sampling was proposed using the prototype station, which called for a pair of identical samplers. Since that time the scope of work has been changed to an option which specified a single sampler with extra filter holders. Therefore, collocated sampling cannot be done as a part of prototype testing; it will, however, become a key component of the side-by-side comparison.

  In order to evaluate the collection precision, which reflects uncertainties in the flow and inequality of the sample streams, we propose conducting sampler testing using only ringed Teflon filters and analyzing them only for mass. The only exceptions are the 4 lpm ammonia denuder filter which will be used for efficiency testing and the carbonate impregnated after-filter for SO_2 determination. For precision testing, the nitric acid denuder coating will be removed. With this protocol, the four sample trains (total, gas, PM-2.5 and PM-10) will each produce two to four identical samples. Precision will be determined by calculating the standard deviation of the difference of the replicates over the number of sampling intervals. Concentrations will be calculated based on the various sample flowrates (3-38 lpm) and analyzed for statistically significant differences. The performance of the two types of cyclones will also be compared and losses of particles through the nitric acid denuder estimated. It is expected that there may be some variation of collocated aerosol concentration with flowrate due to volatilization of semi-volatile particulate matter collected on the filters. The potential error due to this phenomenon will be estimated.

  Dynamic blanks will be collected during the 1000-1400 period. The filters will be installed in the sampler, operated ten seconds and then remain in the sampler for the remaining time period.

  Sampling days will be selected to be representative of varying air quality and meteorology; in addition several time periods will be used. We propose a total of sixteen sampling intervals as shown in the following table:

Sample Interval, PST	0000-6000	0600-1000	1000-1400	1400-1800
Air Quality Meteorology				
Warm, Medium Air Qual	Sample(X)	X	Blank(B)	X
Warm, Good Air Quality	X	X	B	X
Cool, Dry, Med Air Qual	X	X	B	X
Cool, Humid, Med Air Q	X	X	B	X

Days of good air quality are those below 0.12 ppm ozone and would be more representative of background locations. Days above 0.12 ppm ozone would be representative of medium air quality; during the prototype testing in February and March it is unlikely that days of poor air quality (above 0.20ppm ozone) will occur. Sampling days will be separated in time to allow the data from the previous sampling to be analyzed (3-5 day turn around). As much as the season allows, the above matrix is representative of days to be encountered during SCAQS sampling, challenges the collection device to extremes in environmental conditions, and allows the collection of enough data points to be statistically significant.

- Evaluating SO_2 Collection Efficiency.

  This testing will occur during the precision testings. For these tests, the open face filter holder will use a Teflon prefilter followed by two carbonate-impregnated Whatman 541 filters prepared EMSI. Also collocated will be a hydrogen peroxide impinger preceded by a Teflon prefilter; this will be used to independently determine SO_2 concentrations. The carbonate-impregnated filters will be analyzed separately to determine SO_2 breakthrough.

- Evaluating Oxalic Acid-Impregnated Filter Efficiency.

  This will also be done during the precision testing. Two oxalic acid-impregnated filters will be installed in series below the ammonia denuder. The amount of breakthrough on the second filter will be evaluated and the need for a backup filter to trap ammonia volatilized off the front filter determined.

- Evaluating Denuder Efficiency and Nitric Acid and Ammonia Losses in the Sampling Line.

  Since nitric acid and ammonia are both susceptible to losses in the sampling line, the sampler must be rigorously tested to ensure that these losses are not significant. This testing will be conducted independently of that for precision testing, but a similar matrix of environmental conditions will be used. A Teflon filter will be placed in front of the cyclone for gas phase species and collections made with nylon and oxalic acid-impregnated filters, as shown in Figure 1. Nylon and oxalic acid-impregnated filters will also be collected behind Teflon prefilters using open face holders.

  After analysis for ammonium and nitrate on the filters (oxalic acid impregnated and nylon respectively), and ammonium within the denuder, significant differences (greater than the precision which was described previously) would be due to losses in the sample line. In addition, the filters below the denuders will test the efficiency of the denuders.

The number of trials will depend on the initial results and whether changes need to be made to the inlet system or denuders. We will first test a glass inlet as shown in Figure 1; if this appears to be unsatisfactory, a Teflon coated metal inlet will be evaluated (Teflon tubing would be unacceptable since it retains a large electrostatic charge which may remove particles). If losses are still observed we will shorten the most promising inlet as much as possible and test it and the influence of conditioning with ambient air. The need for altering the design for the denuder will also be determined.

SIDE BY SIDE TESTING

The side by side testing will be conducted using a protocol identical to that for sampling during the SCAQS intensive days; this testing will also be coordinated with training station operators. A matrix of environmental conditions similar to that of the previous table will be used. Blanks will be rotated so that they will be collected from all time intervals but on varying days. There will be a total of eight collection periods. From these six representative periods will be chosen for complete chemical analysis.. This will be a sufficient number to statistically determine sampler equivalency.

I would appreciate any comments on the testing protocol brought to my attention within the next two weeks to keep the prototype testing on schedule.
Distribution:

B. Appel (AIHL)
L. Ashbaugh (CARB)
D. Blumenthal (STI)
G. Cass (CalTech)
M. Chan (AV)
R. Countess (EMSI)
J. Collins (ERT).
K. Fung (ERT)
S. Hering (UCLA)
W. John (AIHL)
K. Knapp ((EPA)
D. Lawson (CARB)
W. Pierson (Ford)
J. Watson (DRI)
G. Wolff (GM)

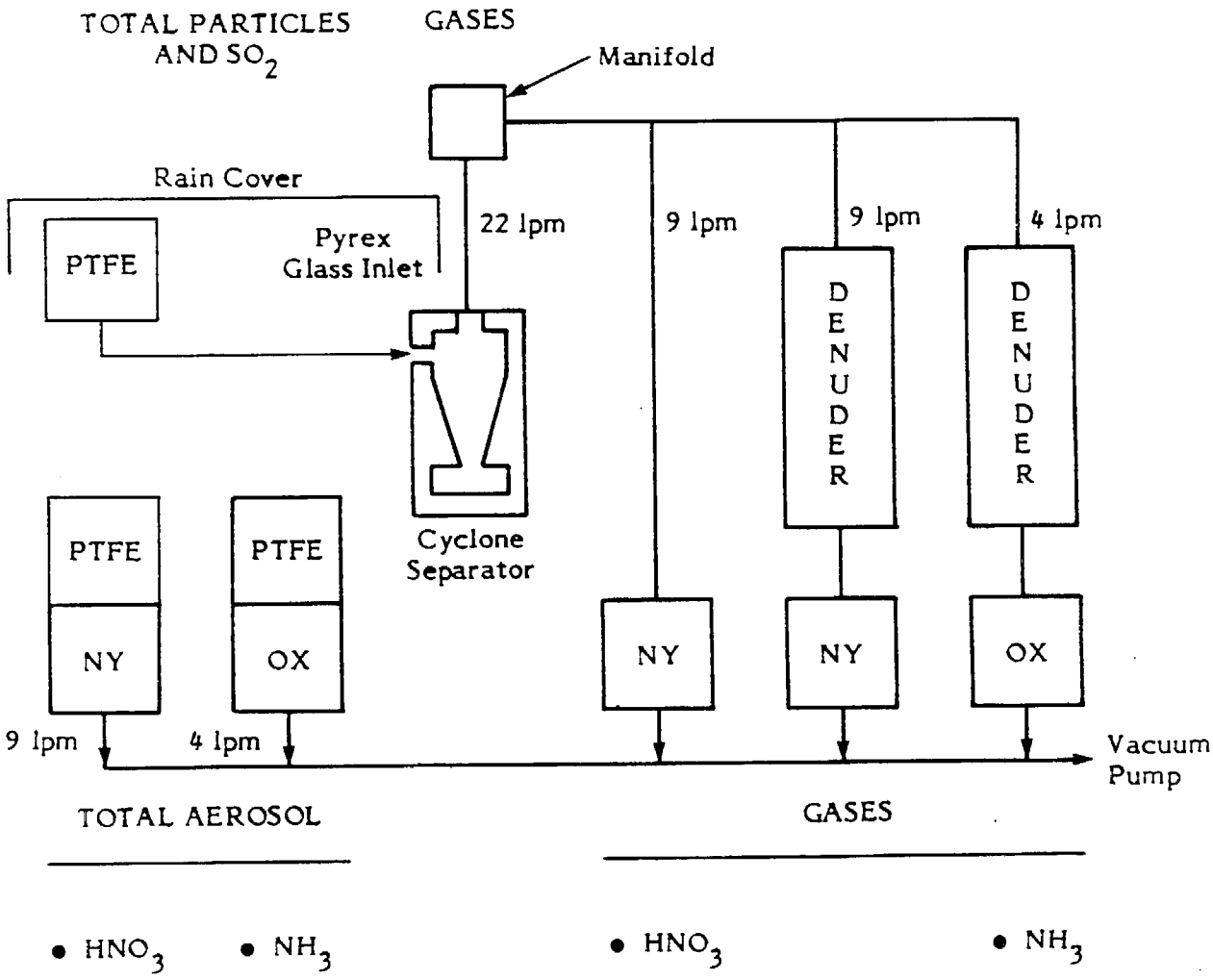

NY = Nylon Filter
OX = Oxalic Acid Impregnated Glass Fiber Filter
PTFE = Polytetra Fluoroethylene Filter

Figure 1. Sampling Schematic for Inlet and Denuder Testing

87-54

Please reference: 91051

MEMORANDUM

To: Distribution

From: Dennis Fitz

Date: 11 March 1987

Subject: Final Protocol for SCAQS Aerosol Sampler Performance Testing

The protocol for performance testing of the prototype has been refined somewhat based on the comments received. The purpose of this memo is to first review the comments and how they were addressed and then present the final testing protocol.

COMMENTS FROM REVIEWERS

Comment - Show that there are not losses in the PM-10 manifold.

Response - An adaptor plate was made so that aerosol may be directly sampled from the PM-10 inlet using a 47mm open-face filter.

Comment - When testing the inlet for nitric acid and ammonia losses, differences in the face velocity of the Teflon pre-filters may result in varying amounts of ammonia and nitric acid released by volatilization.

Response - The objective of this procedure was to look at sampling losses though the entire system by comparing with open-face stacked filters. A partial solution would be to use a larger filter for prefiltering the 22lpm flow to the cyclone; since the oxalic acid impregnated filter samples at 4lpm and the nylon at 9lpm, a total match of face velocities cannot be made. Two alternatives are possible:

1) Use a single 4 in Teflon pre-filter from which all the filters will sample. This introduces tubing to the previously open face filters (see figure 1).

2) Set up separate cyclone with filtered air avoiding the glass inlet and using Teflon fittings and tubing in place of a Teflon coated manifold (all-Teflon sample lines should be avoided in the actual sampler since the electrostatic charge carried by the material may remove particles; in this case the air is filtered so this is not a concern). This is shown in figure 2.

Since option 1 tests both the inlet line and manifold in addition to the cyclone for losses of ammonia and nitric acid we prefer opting for it; it is also mechanically easier to set up. The sample line to the non-cyclone filter holders will be made as short as possible with 3/8" Teflon tubing. If significant losses of ammonia and nitric acid are observed, we may use the second option to isolate the effect of the cyclone.

Comment - Test pressure drop (or flows) to make sure filters are not loading up to the point where flows are affected.

Response - We will substitute one of the collections in the matrix for precision testing with one of twenty-four hour duration. The filter loading will be monitored by measuring the flow at approximately 4 hour intervals. This will also present a challenge for breakthrough testing when collecting SO_2 and NH_3.

Comment - Do testing in batches and not all at once so that changes can be made if necessary and evaluated.

Response - Good idea; we will do one day at a time and look at results between collections.

Comment - The concentrations of the gas phase species, particularly ammonia may not be high enough for a valid testing at the location and season used.

Response - Based on the initial results (see previous comment) we will either increase the sampling time or change locations. The latter is preferred; Rubidouox would be a suitable alternative for increased ambient ammonia.

Comment - What is the statistical basis for six analysis intervals for site by site comparisons.

Response - The number was chosen primarily due to cost considerations; the statistical basis will be derived.

Comment - Samples for XRF and carbon analyses should be included in prototype testing.

Response - The Teflon filters used are suitable for XRF analyses and will be provided to the XRF sponsor upon request. We did not find it necessary to test for carbon collection precisions at this time (it is included in the side-by-side testing), mass precision was deemed more inclusive and important.

PROTOTYPE TESTING

In order to evaluate the collection precision, which reflects uncertainties in the flow and inequality of the sample streams, we propose conducting sampler testing using only ringed Teflon filters and analyzing them only for mass. The only exceptions are the 4 lpm ammonia denuder filter which will be used for efficiency testing and the carbonate impregnated after-filter for SO_2 determination. For precision testing, the nitric acid denuder coating will be removed. With this protocol, the four sample trains (total, gas, PM-2.5 and PM-10) will each produce two to four identical samples, see figure 3. Precision will be determined by calculating the standard deviation of the difference of the replicates over the number of sampling intervals. Concentrations will be calculated based on the various sample flowrates (3-38 lpm) and analyzed for statistically significant differences. The performance of the two types of cyclones will also be compared and losses of particles through the nitrate acid denuder estimated. It is expected that there may be some variation of collocated aerosol concentration with flowrate due to volatilization of semi-volatile particulate matter collected on the filters. The potential error due to this phenomenon will be estimated.

Sampling days will be selected to be representative of varying air quality and meteorology; in addition several time periods will be used. We propose a total of sixteen sampling intervals as shown in the following table:

Sample Interval, PST	0000-6000	0600-1000	1000-1400	1400-1800
Air Quality Meteorology				
Warm, Medium Air Qual	Sample(X)	X	Blank(B)	X
Warm, Good Air Quality	X	X	B	X
Cool, Dry, Med Air Qual	X	X	B	X
Cool, Humid, Med Air Q	X	X	B	X

Dynamic blanks will be collected during the 1000-1400 period. The filters will be installed in the sampler operated ten seconds and then remain in the sampler for the remaining time period. Days of good air quality are those below 0.12ppm ozone and would be more representative of background locations. Days above 0.12ppm ozone would be representative of medium air quality; during the prototype testing in February and March it is unlikely that days of poor air quality (above 0.20ppm ozone) will occur. Sampling days will be separated in time to allow the data from the previous sampling to be analyzed (3-5 day turn around). As much as the season allows, the above matrix is representative of days to be encountered during SCAQS sampling, challenges the collection device to extremes in environmental conditions, and allows the collection of enough data points to be statistically significant. If detection limits are not realized for NH^3 or SO_2 the sampling location will changed. In addition, one of these intervals will be replaced with a 24-hr one to evaluate the effect of filter loading on flowrate.

- Evaluating SO_2 Collection Efficiency.

  This testing will occur during the precision testings. For these tests, the open face filter holder will use a Teflon prefilter followed by two carbonate-impregnated Whatman 41 filters prepared EMSI. Also collocated will be a hydrogen peroxide impinger preceded by a Teflon prefilter; this will be used to independently determine SO_2 concentrations. The carbonate-impregnated filters will be analyzed separately to determine SO_2 breakthrough.

- Evaluating Oxalic Acid-Impregnated Filter Efficiency.

  This will also be done during the precision testing. Two oxalic acid-impregnated filters will be installed in series below the ammonia denuder. The amount of breakthrough on the second filter will be evaluated and the need for a backup filter to trap ammonia volatilized off the front filter determined.

- Evaluating losses in the PM-10 manifold. This will also be a part of precision testing. A separate PM-10 inlet attached directly to an open face filter holder will run at 114 lpm during the same intervals as precision testing. The mass concentration obtained in this way will be compared to that from the three separate filters below the manifold.

- Evaluating Denuder Efficiency and Nitric Acid and Ammonia Losses in the Sampling Line.

  Since nitric acid and ammonia are both susceptible to losses in the sampling line, the sampler must be rigorously tested to ensure that these losses are not significant. This testing will be conducted independently of that for precision testing, but a similar matrix of environmental conditions will be used. A 4-inch diameter Teflon filter will be placed in front of the cyclone for gas phase species and collections made with nylon and oxalic acid-impregnated filters, as shown in Figure 1.

  After analysis for ammonium and nitrate on the filters (oxalic acid impregnated and nylon respectively), and ammonium within the denuder, significant differences (greater than the precision which was described previously) would be due to losses in the sample line. In addition, the filters below the denuders will test the efficiency of the denuders.

  The number of trials will depend on the initial results and whether changes need to be made to the inlet system or denuders and if the sampling location needs to be changed to reach significant concentrations, particularly for ammonia. We will first test a glass inlet as shown in Figure 1; if this appears to be unsatisfactory, a Teflon coated metal inlet will be evaluated (Teflon tubing would be unacceptable since it retains a large electrostatic charge which may remove particles). If losses are still observed we will shorten the most promising inlet as much as possible and test it and the influence of conditioning with ambient air. The need for altering the design for the denuder will also be determined.

SIDE BY SIDE TESTING

The side by side testing will be conducted using a protocol identical to that for sampling during the SCAQS intensive days; this testing will also be coordinated with training station operators. A matrix of environmental conditions similar to that of the previous table will be used. Blanks will be rotated so that they will be collected from all time intervals but on varying days. There will be a total of eight collection periods. From these six representative periods will be chosen for complete chemical analysis.. This will be a sufficient number to statistically determine sampler equivalency.

Distribution:

B. Appel (AIHL)
L. Ashbaugh (CARB)
D. Blumenthal (STI)
G. Cass (CalTech)
M. Chan (AV)
R. Countess (EMSI)
J. Collins (ERT).
K. Fung (ERT)
S. Hering (UCLA)
W. John (AIHL)
K. Knapp ((EPA)
D. Lawson (CARB)
W. Pierson (Ford)
J. Watson (DRI)
G. Wolff (GM)

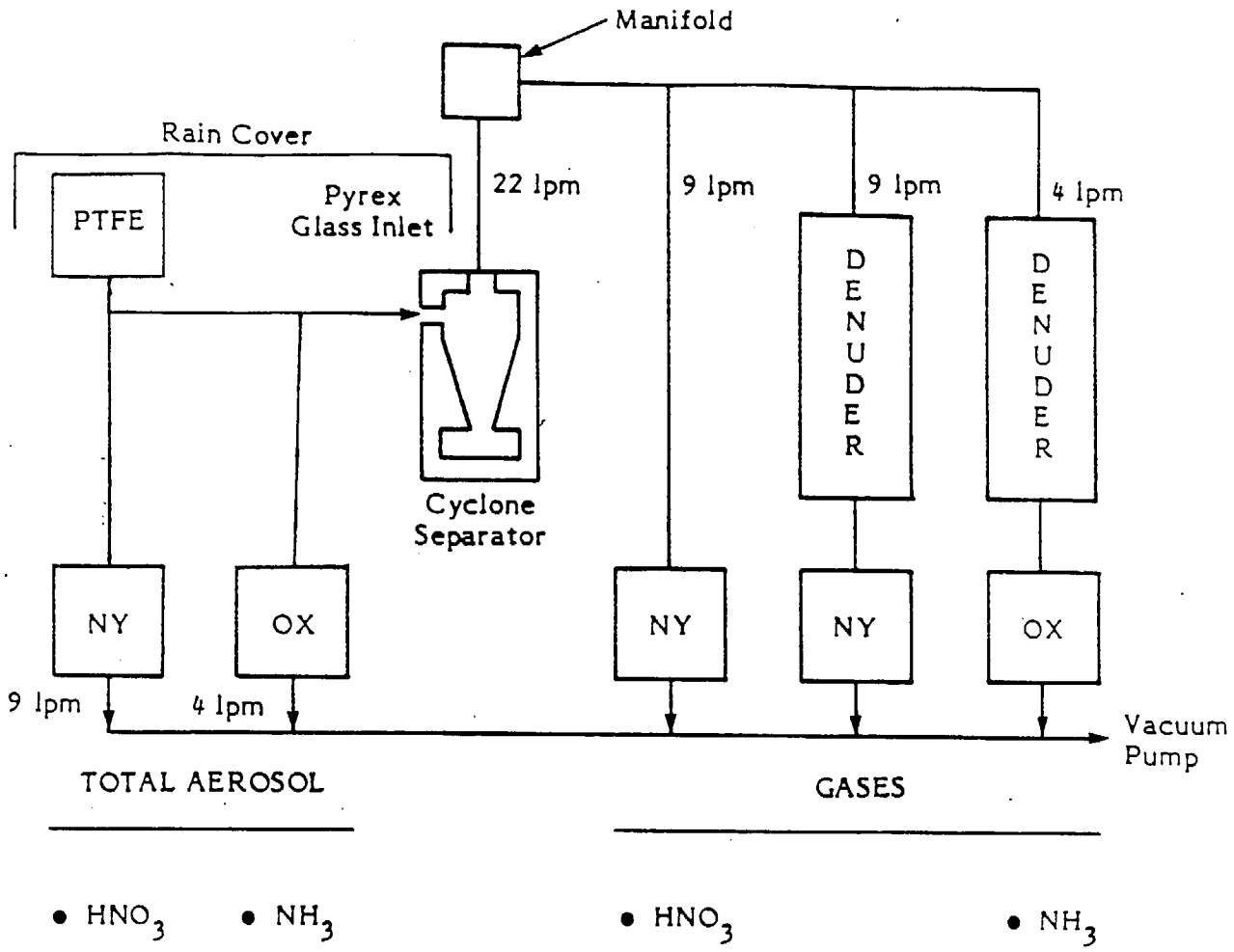

NY = Nylon Filter
OX = Oxalic Acid Impregnated Glass Fiber Filter
PTFE = Polytetra Fluoroethylene Filter

FIGURE 1. Sampling schematic for inlet and denuder testing, option 1.

87-54

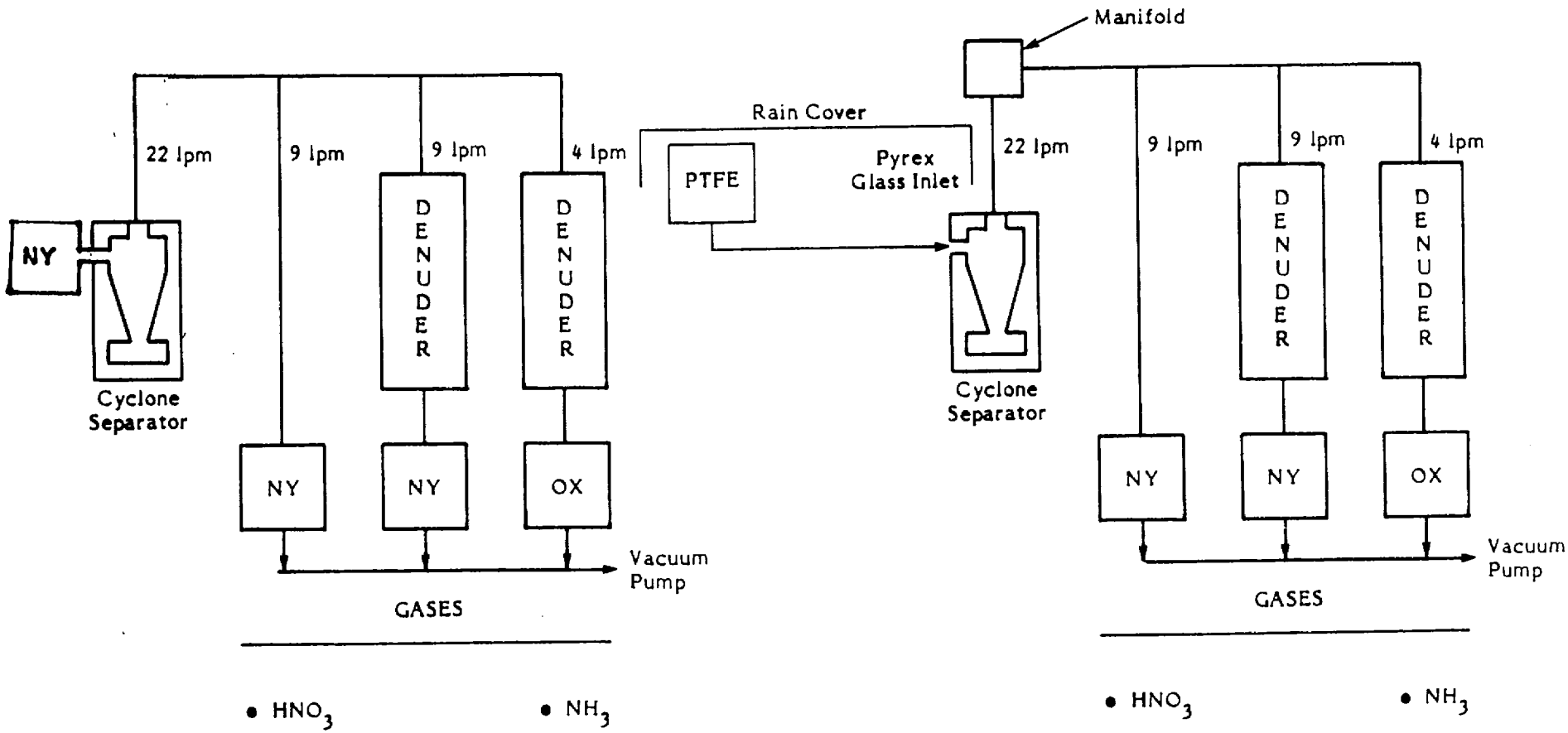

NY = Nylon Filter
OX = Oxalic Acid Impregnated Glass Fiber Filter
PTFE = Polytetra Fluoroethylene Filter

FIGURE 2. Sampling schematic for inlet and denuder testing, option 2.

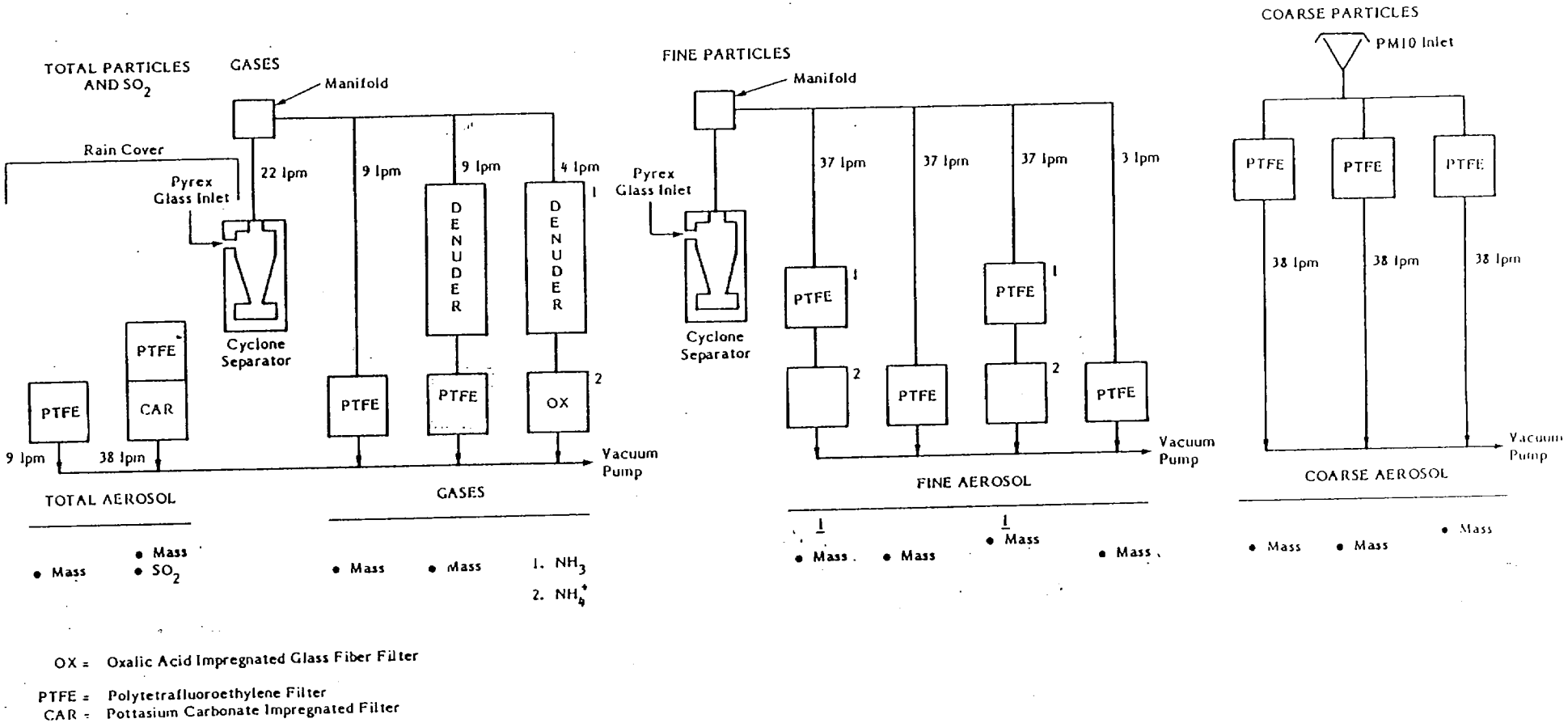

OX = Oxalic Acid Impregnated Glass Fiber Filter

PTFE = Polytetrafluoroethylene Filter
CAR = Pottasium Carbonate Impregnated Filter

FIGURE 3. Precision testing for the gas and size-selective aerosol sampling system.

4.1.2 Maintenance

o **Filter Holders**

The filter holders must be cleaned once during each of the 48- to 72-hour sampling episodes. The afternoon station operators will do this following the 1400-hour and 1800-hour filter changes on the first day of sampling of each intensive sampling period.

- Remove the Tygon tubing from the ten holders that have the tubing on their outlets and the quick-connect fittings from the tube holders with this type of fitting.

- Put on clean gloves.

- Disassemble the holders and immerse them in a deionized water (DI) bath. Use paper towels to wipe off all surfaces of the holders.

- Remove the holder parts from the bath and air dry them for at least 30 minutes.

- To remove residual water trapped in the holders, assemble the holders and draw air through them using a vacuum pump. (If the air drawn through the filter is of questionable purity, use a filter upstream of the holder.)

- Disassemble the filters once more.

- Wipe off visible water droplets.

- Air dry the holders for an additional 30 minutes.

4.1.3 Daily Operation

Note: Daily sampler operation consists only of sample changing. Remember, however, that the cyclone and filter cassette must be cleaned before each of the 48- to 72-hour sampling episodes. Do not forego this maintenance, as samples will be invalidated if it is not performed on schedule.

The daily operation of SCAQS sampler during the intensive study period includes sample changes at 4- to 7-hour intervals. The sample pumps will run continuously during these periods. For the initial sample period, plug in the pumps fifteen minutes before connecting the filter cassettes.

The 12 filter cassettes are color-coded and use noninterchangable quick-connect outlets. To avoid confusion, a carrying case has been configured to hold the cassettes in the same relative position as they will have in the SCAQS sampler. The site operators are to maintain this filter position configuration in order to expedite sample changing.

4.1.3.1 SCAQS Sampler Filter Cassette Changing

Use the following procedure to change the SCAQS sampler filter cassettes.

1. Record the "end" vacuum gauge readings on the SCAQS sampler data sheet (see Figure 3-10) that was initiated for the set of filters presently in the sampler.

2. Disconnect nine of the ten filter cassette inlets from the filter cassettes inside the SCAQS sampler as follows:

    a. Loosen the brass nut above the cassettes by hand about a half revolution.

    b. Pull the cassette off the inlet fitting.

c. Lower the cassette to the aluminum resting plate.

3. Remove the two cassettes located externally in the total particle stilling chamber as follows.

   a. Remove the cassettes from the PVC holder by slipping the base through the slot.

   b. Place them on the holder located on the inside of the door.

4. The final cassette inside the SCAQS sampler is connected to a denuder. Both the cassette and the denuder must be changed. Be careful not to break the denuder's glass tube.

   a. Remove the plastic tubing that supplies air to warm the bottom of the denuder.

   b. Carefully slide the top glass tube all the way into the stilling chamber, while holding the cassette down.

   c. Remove the filter cassette at the base. (The glass tube should be free of it.)

   d. Carefully slide the glass tube down out of the stilling chamber and remove the denuder assembly.

   e. Place the PVC caps over the denuder inlets and outlets.

   f. Verify that the correct denuder I.D. number is entered on the SCAQS sampler data sheet.

   g. Place the used denuder in the filter carrying case.

5. The next step is to measure the 12 "end" flow rate values and record them in the end flow column of the SCAQS sampler data sheet. This is accomplished using the two rotameters and fitting adapters. The left rotameter will be used for filter locations 1 through 6 and the right rotameter will be used to measure the flows of filter positions 7 through 12.

   a. First, make sure that the knurled nut on the filter inlet is loose. If it is not, the O-ring inside will move out of position and a good seal cannot be made. If this happens, remove the nut and the brass piece under it carefully. Remove the O-ring and place it on the shoulder of the body. Replace the brass piece with the narrow part in the fitting, then replace the nut.

   b. Slide the rotameter outlet into the filter cassette inlet. For the open filters (the ones mounted outside) use the stopper-adapter to plug the open port.

   c. Hand tighten the cassette inlet brass nut while holding the rotameter vertically.

   d. Read the flow rate (indicated by the center of the rotameter float) and record it on the SCAQS sampler data sheet in the end flow column of the corresponding filter.

   e. Loosen the cassette inlet brass nut.

   f. Remove the rotameter.

   g. Repeat the procedure for the remaining cassettes.

6. Disconnect the 12 color-coded "quick connect" fittings that attach the filter cassettes to the pump manifolds by pulling out on the knurled rings with a fair amount of force.

Note: Each site has two sets of cassettes, one designated as "Set A," the other as "Set B." For convenience, the following four filter change steps assume that Set A is the set to be removed and Set B is to be installed. (During routine operations when Set B is to be removed, the letter designation in the next three steps are reversed.)

7. Record the stop time from the running time meter, the actual time, and the stop temperature in the Set A SCAQS sampler data sheet on the lines labeled end timer/time and stop temperature.

8. Remove the 12 Set A cassettes from the sampler one at a time and place them in the empty filter cassette change box.

9. Place the Set B cassettes in the appropriate location in the sampler. Run the cassette outlet lines through the appropriate port on the cassette resting plate, but do not connect them via quick-connects at this time. (Run the two external cassette lines through the notches in the bracket located on the inside of the door. Later you will place these cassettes in their sampling position in the inlet, not inside the SCAQS sampler.)

10. Verify that the 12 cassettes in the SCAQS sampler all have the "Set B" designation written on them.

11. Verify that the 12 cassettes in the carrying case all have the "Set A" designation written on them.

12. Record the without-filter vacuum readings, in the Set B SCAQS sampler data sheet.

13. Attach the quick-connect fittings for all twelve cassettes by forcefully pushing the filter side connection into the manifold side connection with the matching color band. You will feel (and hear, when the pumps are off) a distinct "click" when the fittings snap together.

14. Record the start time from the timer and the start temperature in the Set B SCAQS sampler data sheet.

15. Repeat Step 5 to obtain the 11 "start" flows. Record the flow data in the Set B SCAQS sampler data sheet in the column labeled start flows. If flow rates are not within the tolerances specified on the SCAQS sampler data sheet, check the O-ring seal and reposition it if it is out of place using Step 5a. If this does not correct the problem, note it in the Set B SCAQS sampler data sheet and the station log, and notify the field manager as soon as possible. (If the flow rates are out of tolerance, samples are still to be collected.)

16. Attach nine of the ten cassettes inside the sampler to the appropriate inlet as follows:

    a. Lift the cassette off the cassette resting plate.

    b. Verify that the cassette inlet vacuum fitting nut is loose.

    c. Carefully slide the inlet over the appropriate plenum outlet (identified by matching color bands).

    d. Slide the inlet up the plenum outlet until the fitting nut reaches the color band.

    e. Tighten the cassette inlet finger tight.

17. Replace the denuder and cassette as follows. Note: Avoid breathing around the denuder inlet and outlet, as this would contaminate the sample.

    a. Verify that the denuder tube number is the same number written on the Set B SCAQS sampler data sheet.

b. Remove the PVC assembly from the end of the glass oxalic-acid-impregnated ammonia denuder tube.

c. Each tube is marked with an arrow from inlet to outlet. Insert the inlet so that the glass tube is all the way in.

d. Adjust the vacuum fitting nut in a similar manner as done for cassettes.

e. Lower the denuder glass tube into the cassette inlet.

f. Tighten the nuts on each end.

g. Slide the warming air line into the base of the denuder. (This is easy to forget. **DON'T.**)

18. Replace the two cassettes mounted outside into their holders as follows (Note: Be sure not to touch the filter surface):

a. Slide the base into the slot.

b. Lower the cassette to the base of the PVC.

19. Record the vacuum gauge readings in the SCAQS sampler data sheet in the spaces labeled start vacuum readings.

20. Verify that the running time meter is moving and that the cooling fan and denuder heater bulb are on. If the SCAQS sampler light was turned on, turn it off.

21. Close the door and attach at least two of the door-securing clamps.

4.1.4 Filter Handling

The following describes filter handling from the time the filters leave the lab where they were initially prepared to the time they are returned to the control of the analyzing lab.

4.1.4.1 Receipt and Storage of Unused Filters

All filters will be sent from the laboratory to AV-Monrovia on the 14th of June and then following each intensive sampling period. The filters will be in plastic petri dishes with I.D. numbers showing on top of the dishes (see Table 4-1 for the key to the filter labeling). The 16 dishes to be used for each sampling period will be in tupperware containers numbered "SCAQS sampler 1 through 300." A complete set of filters for each site (16 tupperware containers) will be packed by EMSI in large ice chests for shipment to AV-Monrovia and then to the sampling sites. The filters will be left in the ice chests before sampling and they will be stored in the tupperware containers in the refrigerators at each site until the end of each intensive period.

4.1.4.2 Filter Cassette Loading

Notes: Wash hands with soap and water, rinse and dry thoroughly. Wear particle masks and latex gloves when handling filters. Use only one pair of gloves per shift. Avoid breathing on the filters since particle masks do not remove gases like ammonia, which could contaminate the filters.

The following items are necessary for filter cassette loading:

- Wash basin
- Soap and water
- Particle mask and latex gloves
- Cassette carrying case with 12 filter cassettes in the correct position (matching color codes and numbers for cassettes and case)
- 2 pairs of plastic tweezers and a pocket knife

- Kimwipes
- Package of filters with correct code for upcoming sample period
- SCAQS sampler data sheet
- Clean draft-free working area
- Roll of parafilm tape

After all necessary supplies have been brought together, filter cassette loading is to be performed as follows:

Note: Handle unused filters with gloves, tweezers and/or a clean pocket knife.

Filter I.D. prefix number 5-X1 is an oxalic acid-impregnated filter. It must be handled with a pair of tweezers that do not handle other filters. Thus, the second set of tweezers must be labeled oxalic acid only and used to handle the oxalic acid filter only. Conversely, the primary pair of tweezers must never touch the oxalic acid-impregnated filter.

The oxalic-acid impregnated filter petri dish will arrive wrapped in aluminum foil. The station operator is to reseal the petri dish containing the exposed oxalic acid filter with the aluminum foil before storing in the refrigerator.

1. Take out a new SCAQS sampler data sheet and fill in the station name, start date, the station operator's complete name and the tupperware box number.

2. Remove the tupperware box from the ice chest that is next in sequential order and note the container's number on the SCAQS sampler data sheet.

3. Remove the 14 petri dishes from the tupperware container and load them into the SCAQS sampler filter cassettes using the pertinent instructions outlined in the following sections.

Note: Perform steps 4 through 11 for the first cassette, then repeat the steps for the remaining cassettes.

4. Open the filter holders as follows:

Teflon Fiter Holders Nos. 1, 2, and 4

a. Grasp the gray or orange filter holder section.

b. Unscrew the translucent top section.

c. Remove the lid.

d. Push the bottom up through the body.

Note: There is a multifilter adapter. Filter holder Nos. 1 and 4 use this just to prevent filter tearing (the single filter in these holders goes on top of the adapter). Filter holder No. 2 has a Teflon filter on top of the adapter and a carbonate filter below the adapter.

Aluminum Filter Holders Nos. 3 and 5-12

a. Grasp the lower knurled ring.

b. Unscrew the upper ring.

c. Remove the top ring and lid.

d. There is a 50 µm screen in the holder base and a Viton O-ring in the holder lid. Also for filter cassettes 7 and 10 there is a metal ring. Verify that the screen is placed under the filters and, in the case of cassettes 7 and 10, that the metal ring is placed on top of the filter.

5. Inspect the cassette for filter residue or other contaminants. Use Kimwipes to remove any contaminants.

6. Remove the lid from the first petri dish.

7. Using the pocket knife and tweezers, grasp the filter near the edge and remove it from the petri dish.

Note: The Teflon filters (I.D. prefixes 8-T1, 9F-T2, 11-T3 and 12-T4), the quartz filters (I.D. prefixes 7-Q1, 9B-Q2 and 10-Q3) and the polycarbonate filter (I.D. prefix 6-P1) have top and bottom sides. Although the lab will attempt to place all filters in the petri dishes top side up, it is still the site operator's responsibility to assure that the filters are loaded in the correct orientation. The Teflon filter top side is identifiable by the large lip between the ring and the filter surface and a shinier appearance for the top side. The bottom side of the quartz filter is identifiable by grid lines on the surface. The polycarbonate top side is slightly shinier than the bottom.

8. Place the filter in the cassette as follows:

   a. Filter Cassettes 2 and 9 contain two filters each. For Filter Cassette 9, place the back filter (I.D. prefix 2B-C2) in the filter holder first, then the front filter (I.D. prefix 9F-T2) on the top before closing the cassette.

   b. For Cassette No. 2, place the back filter (I.D. prefix 2B-C2) in the filter holder, place the multifilter holder adapter on top of Filter I.D. prefix 2B-C2, then place Filter I.D. prefix 2F-Z1 on top of the multifilter holder adapter.

   c. Filter cassettes 1, 3, and 4 are nylon filters and must be loaded with a Teflon prefilter. These prefilters are not numbered and can be found in the SCAQS sampling media ice chest taped together in groups of three. Use one set with each filter kit. To load these filters, first place the numbered nylon filter in the

corresponding cassette, then place one of the Teflon prefilters on top of the nylon filter.

d. Discard the three extra petri dishes that the Teflon prefilters were originally stored in.

9. Reassemble the cassettes as follows:

Teflon Filter Holders

a. Lower the filter base containing the filter(s) and multifilter adapter to the base of the grey ring.

b. Screw the top on until you feel it make contact with the base, then tighten by an additional (approximately) 1/20 turn. (The top is to be just "finger-snug," be careful not to overtighten the cassette as this will cause the filters to tear.)

Aluminum Filter Holders

a. On filters 7-Q1 and 10-Q3, place the stainless steel ring on the filter. All other filter holders do not have this ring.

b. Set the top back on the cassette.

c. Tighten the retaining ring until it makes contact with the O-ring, tighten by no more than a 1/8 turn. (The nut is to be just "finger-snug." As with the Teflon holders, overtightening will tear the filters.)

10. Replace the lid on the petri dish.

11. Enter the filter I.D. number on the SCAQS data sheet in the filter I.D. column.

12. Denuder

    a. Mark the denuder number on the SCAQS sampler data sheet.

    b. Place the denuder in the filter cassette change box.

13. Cover the cassette inlets with Parafilm until ready to load the cassettes into the SCAQS sampler.

Replace the empty petri dishes in the tupperware box and leave it on the work table.

4.1.4.3 Filter Cassette Unloading

Remove "sampled" filters from the filter cassettes and refrigerate them within one hour of the end of the sampling period. Wash hands with soap and water, rinse and dry thoroughly. Wear particle masks and a new pair of latex gloves during the filter handling.

The following items are necessary for filter cassette unloading.

- Wash basin
- Soap and water
- Particle mask and latex gloves
- Cassette carrying case with 12 filter cassettes in the correct position
- Plastic tweezers and pocket knife
- The package of petri dishes with I.D. numbers corresponding to the sampled filters
- SCAQS sampler data sheet
- Clean working area
- Kimwipes and deionized water (DI)
- Zerostat gun
- Roll of 1-inch wide Teflon tape
- Roll of parafilm tape

Unload the filter cassettes as described below. Perform Steps 1-3 for the first cassette before starting to unload subsequent cassettes.

1. Verify that the I.D. number in the filter log matches the I.D. on the first petri dish. If you cannot match the I.D.'s, use one of the spare petri dishes on site. Label the petri dish with the log information and note the activity in the station log book and on the SCAQS sampler data sheet.

2. **Note:** Do not touch the filters. Do not fold or tap the filters as this will cause sample loss.

   Teflon Cassettes

   a. Open the cassette and push the base up through the orange or grey ring.

   b. For cassettes 1 and 4, use tweezers to remove both the Teflon and the nylon filters together.

   c. Place both of them in the appropriate petri dish that originally contained just the nylon filter.

   d. Return the lid to the petri dish.

   e. For Cassette no. 2, which has two filters, repeat Step 1 for the bottom filter.

   f. Remove the multiholder adapter.

   g. Remove the bottom filter, and place it in the appropriate petri dish.

Aluminum Cassettes

a. Open the cassette.

b. Carefully remove the top (on Filter nos. 7-Q1 and 10-Q3, remove the stainless steel ring).

c. You may need to peel the filter off the O-ring and base grid using the pocket knife and tweezers.

d. For cassette no. 3, remove both the Teflon and nylon filters with the tweezers and store them in the petri dish for filter 3-N2.

e. Using tweezers and pocket knife (as necessary), remove the filter (top filter for Cassettes Nos. 7 and 9).

f. Place it in the appropriate petri dish.

g. Return the lid to the petri dish.

h. For Cassettes Nos. 7 and 9, which have two filters, repeat Step 1 for the bottom filter, remove the bottom filter.

i. Place in the appropriate petri dish.

j. Wrap the petri dish for the oxalic acid filter (no. 5-X1) with aluminum foil.

3. Reassemble the cassettes to avoid interchanging parts from cassette to cassette.

4. Place the fourteen petri dishes containing sampled filters in the tupperware container, replace the lid, and seal the container with Parafilm. Place the sealed container in the refrigerator.

5. Reopen the cassettes (one at a time) and check for filter debris. Remove any filter residue using the Kimwipes and DI. If the Kimwipes are not successful, use the knife to remove the filter material from the Viton O-rings.

6. If DI was used to clean a cassette, allow the cassette to air dry. Reassemble the cassettes after cleaning to avoid part interchanging.

o **Denuder Tubes**

Wrap both ends of the glass tube with parafilm tape before covering the ends with the PVC caps. Do not store in the refrigerator.

4.1.4.4 Filter Contamination and Replacement

If a filter becomes contaminated (dropped on the floor, etc.) or torn during the filter cassette loading procedures, it can be replaced with a spare filter. Spare filters will be provided in a tupperware container labeled spare filters. See Table 4-2 for the type of filter to be used as a replacement. Be sure to select the appropriate type of Teflon filters, tared or untared. One cannot be substituted for the other.

1. Replace the contaminated filter with the appropriate spare.

2. Note the new filter number in the filter I.D. column of the SCAQS sampler data sheet only if it is a tared Teflon filter. All other spare filters assume the filter number of the filter it replaces.

3. Make a note in the comments column that a spare filter was used.

If the filter was contaminated during the unloading procedures, finish the loading procedures. Do not throw the filter away. Make a note on the SCAQS sampler data sheet and in the station log.

4.1.4.5 Start-Up Procedures

The evening before the first day of sampling of each intensive sampling period, the SCAQS sampler must be checked out to assure that it is operating properly.

- **Sampler Check and Purging**

Start the SCAQS sampler and let it run for at least ten minutes with empty filter cassettes installed to blow out any dirt or organic materials that may have accumulated while the sampler was inactive. During this period, check that the pumps, cooling fan, and denuder heater lamp are operating. Clean the rotameter probes and stoppers now and whenever they are visibly dirty. Also, check the Swege connectors and quick disconnects to assure that they have not become loose due to the vibrations that occur from normal operation of the SCAQS sampler.

- **Blank Filter Installation Procedures**

1. With the SCAQS sampler still running, install a set of "blank" filters using the instructions in section 4.1.4.2 to load the filter cassettes (this includes all pertinent documentation) and section 4.1.3.1 starting with step 9 to load the cassettes into the SCAQS sampler.

2. Turn the SCAQS sampler off and wait five minutes. Restart the sampler and unload the cassettes from the sampler using steps 2 through 8 of section 4.1.3.1.

3. Unload the filters from the filter cassettes using the procedures in Section 4.1.4.3.

- **SCAQS Sampler Preparation for First Sampling Run**

1. Install a new set of filters in the filter cassettes using the procedures in Section 4.1.4.2.

2. Cover the filter inlets with Parafilm.

3. At 0050 hours load the filters into the sampler following the procedures in Section 4.1.3.1, Steps 9 through 21.

4.1.4.6 Station Checks

Check that the pumps, cooling fan and denuder heater lamp are operating. Also check that the Swege connectors and quick disconnects are securely fastened. Finally, visually check the sampler hoses for wear, chafing or cracks.

4.2 PM-10 Samplers (Hawthorne, San Nicholas Island, Long Beach, Azusa and Claremont)

- **Sampling and Filter Change Schedules**

One PM-10 sampler will be located at each site. AV personnel will be responsible for PM-10 sample operation at Anaheim, Hawthorne, San Nicholas Island, Claremont, and Long Beach only. The sampler will be manually started and stopped by the morning station operator. The samplers will run for 24 hours, starting and ending at approximately 0100 hours during the summer sampling period and 0000 hours during the winter period each intensive sampling day.

- **Filter Handling**

1. Receiving Filters

   Unexposed filters will be delivered to each site by the AV courier on the evening before the first day of sampling for each intensive sampling period. The filters are individually wrapped in Glassine envelopes. A total of ten filters (six regular and four spares) will be sent to each site.

2. Filter Storage

a. Before Exposure

Leave the filters in the 8" x 10" boxes in which they were delivered to the sites.

b. After Exposure

Put each exposed filter into the provided individual 8" x 10" manila envelopes. Do not jostle or drop the exposed filters. Store unrefrigerated.

3. Filter Shipping

Leave the exposed filters in their manila envelopes and the corresponding data sheets in the designated locations for pick-up by the AV courier.

o **Sampling Preparation**

1. Filter Loading Schedule

Load and unload the sampler each intensive day between 0000 and 0100 hours.

2. Filter Cartridge Loading Procedures

Load the filter cartridges inside the monitoring trailer to prevent possible contamination and/or damage by the elements. Although the filters are reasonably strong, handle them with extreme care when removing them from the envelope and placing them in the filter cartridge. Each filter has been weighed in preparation for gravimetric analysis, so they must be handled only by the edges, to prevent contamination.

Disassemble the filter cartridges as follows:

a. Remove the wing nuts that hold the cartridge top in place.

b. Remove the cartridge top.

c. Place the new filter on the cartridge supporting screen, I.D. number down, and center the filter.

d. Replace the cartridge top and secure it in place with the wing nuts. **Note:** Do not overtighten the wing nuts, as this can distort the filter cartridge and cause flow leaks.

e. Snap the cartridge cover in place.

f. Enter the filter number, project name, station name, sampler number, date the filter was run, elapsed timer reading and your initials on the filter envelope and the PM-10 data record sheet.

3. Procedure for Loading Filter Cartridge into Sampler

a. Open the top of the sampler.

b. Place the cartridge over the sampler's opening, making sure that the four threaded posts pass through the cartridge and that the cartridge lays flat.

c. Screw the wing nuts provided onto the threaded posts and hand tighten.

4. Dickson Flow Recorder Setup

a. Record on the back of the new Dickson chart the filter number, station name, sampler number, project name, date of the sample run, elapsed timer reading, and your initials.

b. Open the door of the Dickson chart recorder.

c. Using the pen lifter, carefully lift the recording pen and insert the new chart. Take special care not to damage or weaken the center tab of the chart. Push the chart flat and make sure its edge is beneath the two hold-down clips.

d. Set the pen on the chart with the pen lifter.

e. Verify that the chart is set to 0100 hours for the summer sampling period and 0000 hours for the winter sampling period. If not, use a coin to rotate the chart so that the pen is resting on the 0100 or 0000 time mark.

f. Turn the sampler on and allow it to warm up for five minutes. (Caution: To prevent damage to the transducer-recorder, never turn a PM-10 sampler on unless a filter is in place.) Observe whether the transducer-recorder is operating properly.

g. Check the pen to see whether it is inking properly.

h. Check the chart reading. If the reading varies from the reference value (see the PM-10 sampler calibration sheet) by more than $\pm$10 percent, the AV field supervisor must be notified so that the sampler can be recalibrated.

i. Turn the sampler off.

j. Close the Dickson chart door and secure it.

k. See the section on sampling below for starting the sampling cycle.

5. Unloading Filters (After Sampling)

a. Open the PM-10 sampler lid or sampling head.

b. Snap the cartridge cover in place over the filter.

c. Loosen the wing nuts and remove the filter cartridge. Be sure that the filter cartridge is kept level and that it is not jostled or dropped while transporting.

d. Open the Dickson chart recorder door and lift the pen with the pen lifter.

e. Remove the chart and record the elapsed timer reading on the back of the chart.

f. Carry the filter, still in the filter cartridge, and the Dickson chart into the monitoring trailer.

g. Be sure that the PM-10 data record is filled out completely and accurately and that the information noted in the previous section, along with the corrected flow (the flow from the Dickson chart corrected using the current calibration curve), is on the filter envelope.

h. Disassemble the cartridge by loosening the wing nuts and remove the filter cartridge top.

i. Carefully remove the filter from the cartridge, handling it only by the edges to prevent contamination.

j. Inspect the filter for signs of air leakage and/or deterioration of the cartridge gasket that shows up as a fuzzy outline on the filter. Document evidence of leakages and/or gasket deterioration on the filter envelope and the PM-10 data record; make notes in the station log and contact the AV field supervisor about the problem.

k. Visually inspect the gasket face to see if glass fibers were left behind. This is a sign that the wing nuts were overtightened.

> **Note:** Physical damage to the filter after the sample has been collected does not always invalidate the sample. For example, accidentally tearing a corner off of the filter does not invalidate the filter if all of the pieces are included in the shipping envelope. Document all problems with the sample run or anything that may appear unusual about the appearance of the filters in the station log and on the PM-10 data record sheet.

l. Fold the filter widthwise at the middle with the exposed (dirty) side in. Take special care not to disturb or lose any of the collected particulate material. Place the folded filter, open end first into the manila envelope along with the Dickson flow chart.

o **Sampling**

- Starting the Sampler

Once the filter cartridge and Dickson chart are loaded and the sampler has been function checked:

a. Turn the sampler on and record the time on the PM-10 sampler data sheet.

b. Close and secure the sampler door.

APPENDIX B

Results of ERT Quality Check on Ion Analysis

As a quality assurance check, the preweighed Teflon filters sampled in lines 8 and 11 during Period I were analyzed by ERT for Cl^-, NO_3^-, $SO_4^=$ and NH_4^+ using IC for all analyses while EMSI analyzed the unweighed Teflon filters sampled in lines 9 and 12 using IC for Cl^-, $SO_4^=$ and NO_3^- and colorimetric analyses for NH_4^+.

ERT's detection limit for Cl^- is 2 µg/filter while EMSI's was 0.5 µg/filter. Since all of the filters had loadings below 2 µg Cl^-/filter, these data cannot be compared. The data for the other three ions are shown in Figure B-1 and summarized in Table B-1. All ions except PM-2.5 NO_3^- show a positive intercept. The data for PM-2.5 NO_3^- can be fit as well with a slope of 1.00 and intercept 0.15 µg/m^3. The slopes for all ions except PM-10 NH_4^+ are quite close to 1 showing good agreement. For NO_3^-, the agreement is excellent having R^2 if 0.99 and 0.98 for PM-2.5 and PM-10 NO_3^- filters, respectively. The $SO_4^=$ agreement is not as good, with R^2 of 0.85 and 0.86 for PM-2.5 and PM-10 $SO_4^=$, respectively.

The NH_4^+ values have the least good agreement (R^2 of 0.81 and 0.77) as might be expected since ERT used IC and EMSI used colorimetry for the analyses.

Comparing the averages over the samplers, EMSI values and ERT values were comparable with very close coefficients of variability. ERT's values varied from being 2% lower to 7% higher than EMSI's (see Table B-1). These are within the desired limits.

The good agreement between the coefficients of variation for both sets of data except for PM-10 NH_4^+ shows the good correlation of the two sets. The larger coefficient of variation for the ERT PM-10 NH_4^+ data indicates that it is this variability that causes the smaller R^2 value for the set.

TABLE B-1. Comparison of ERT and EMSI ion analyses. *

Species	Slope	Intercept ($\mu g/m^3$)	R^2	Mean ($\bar{X}$) EMSI ($\mu g/m^3$)	Mean ($\bar{X}$) ERT ($\mu g/m^3$)	Coefficients of Variation EMSI %	Coefficients of Variation ERT %	$\bar{X}$ EMSI/ $\bar{X}$ ERT
NO_3^- PM-2.5	1.05	-0.05	0.99	3.87	3.74	23	23	0.97
NO_3^- PM-10	0.94	0.35	0.98	5.24	5.30	25	25	1.01
$SO_4^=$ PM-2.5	0.97	0.46	0.85	5.10	4.77	10	10	0.94
$SO_4^=$ PM-10	1.00	0.41	0.85	6.06	5.68	5	5	0.94
NH_4^+ PM-2.5	0.93	0.28	0.81	2.98	2.89	10	10	0.97
NH_4^+ PM-10	0.72	0.86	0.77	3.47	3.54	11	14	1.02

*Cl^- excluded from comparison due to ERT's detection limits being greater than the Cl^- concentrations.

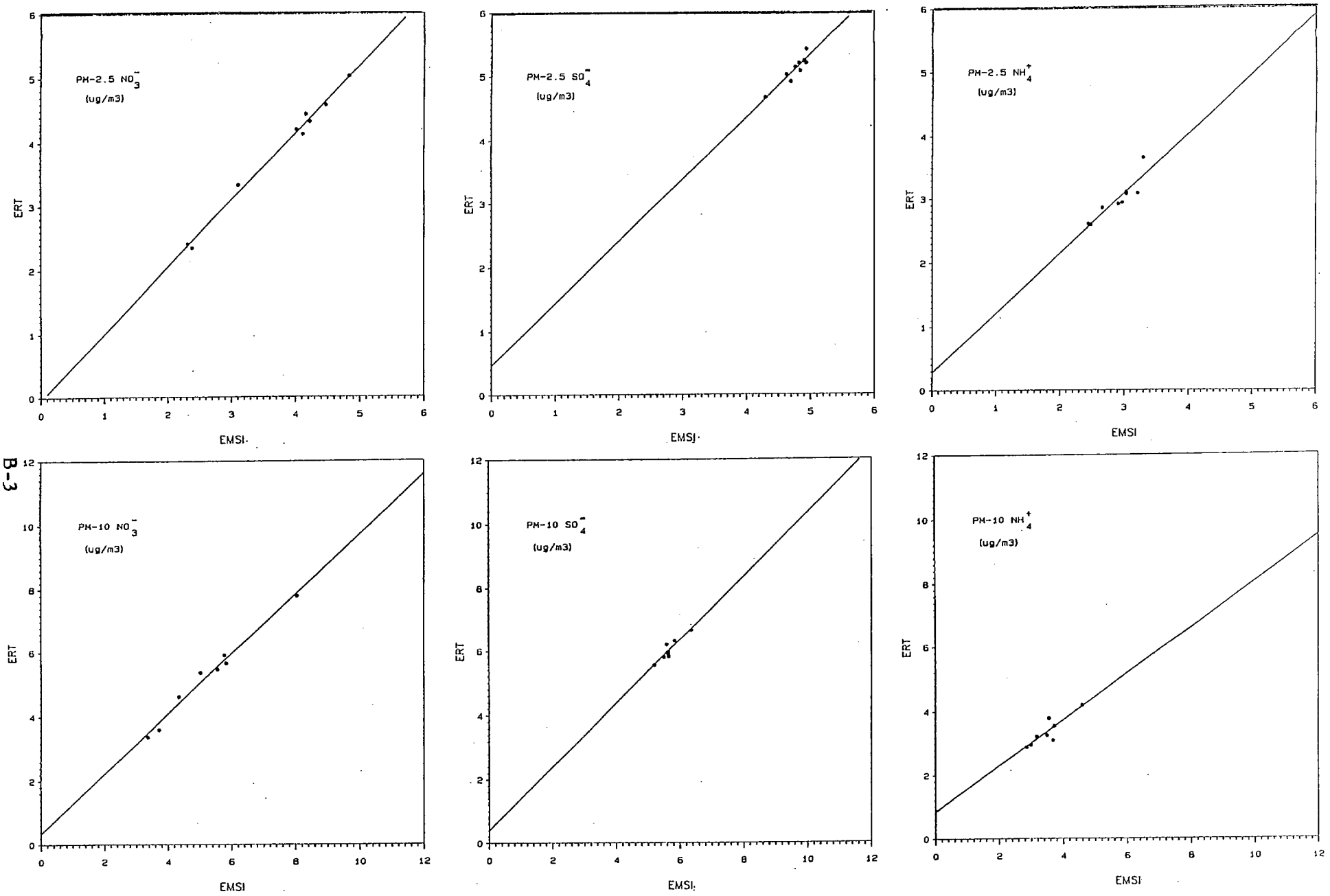

FIGURE B-1. Comparisons of ERT and EMSI analyses of Teflon filters sampled in Lines 8 and 11 and Lines 9 and 12, respectively (see Figure 2-3). ERT did not subtract lab blanks while EMSI did. ERT used IC for all analyses while EMSI used IC for all but NH_4^+ for which they used colorimetry.