APPENDIX E

KVB-ARB THERMAL OIL RECOVERY
DATA BASE: SANTA FE ENERGIES CO. (CWOD)

PARTICULATE TEST DATA BASE
SANTA FE ENERGY CO.

COMPANY NAME & TEST NO.							
SANTA FE ENERGIES (CWOD) Sect. 22, Fellows		K.O. condenser		wells 469-22, 407-22			
Std. CF sampled DSCF		39.74		0.623			
water content %		45		87			
Mass Flowrate DSCFM		134		0.0283			
EPA Meth. 5 (Front + Filter)	grams	— mod. L.A.		— mod. L.A.			
Total Particulates (Impingers included	grams		54.1056		20.4095		
INORGANICS COLLECTED	grams		0.2497		0.0845		
Organics (condensibles) COLLECTED	grams		53.8559		20.3250		

KVB 5807-842

Vapor Recovery
impinger content
inorganics 0.2497 gram
V std. 39.72 DSCF
0.097 grains/DSCF
0.112 lb/hr

ARMAMENT SYSTEMS, INC.
712-F N. Valley St.
Anaheim, Calif. 92801
(714) 635-1524

Collection Accumulato

SANTA FE ENERGIES
Sect. 22. FELLOWS

ENERGY DISPERSIVE X-RAY ELEMENT ANALYSIS 9/ 5/78

Prepared for: KVB Engineering/BRUNETZ P.O.# 14430
Sample lable: 17 CW-1 Run # 789-144
Sample description: ≤1 micron particulates
Remarks: LA. wet impingement Method.

Results are in micrograms per gram (dry weight/estimated error) unless otherwise indicated.

Aluminum - not detrmd	Indium 5.6^{-7} <5	Rubidium 4.9^{-6} (44)
Antimony 1.1^{-6} <10	Iodine 2.2^{-6} <20	Ruthenium 4.5^{-7} <4
Arsenic 1.1^{-6} <10	Iridium 2.2^{-6} <20	Scandium 3.4^{-5} <300
Barium 2.2^{-4} - 2000/200	Iron 2.2^{-2} - 20%/3%	Selenium 2.7^{-6} (24)
Bismuth 3.4^{-6} <30	Lead 5.8^{-6} - 52/8	Silicon - not detmnd
Bromine 2.5^{-6} (22)	Manganese 2.5^{-4} - 2200/300	Silver 3.5^{-6} - 31/4
Cadmium 5.6^{-6} - 50/6	Mercury 1.6^{-5} (140)	Strontium 3.4^{-6} - 30/5
Calcium 6.9^{-4} - 6200/700	Molybdenum 3.5^{-6} - 31/4	Sulfur 2.0^{-2} - 18%/5%
Cesium 2.2^{-6} <20	Nickel 1.3^{-5} - 120/20	Tantalum 3.4^{-6} <30
Chlorine 5.6^{-3} - 5%/1%	Niobium 5.9^{-7} (5.3)	Tellurium 9.0^{-7} <8
Chromium 2.2^{-5} <200	Osmium 6.7^{-6} <60	Thallium 3.4^{-6} <30
Cobalt 1.1^{-5} <100	Palladium 4.5^{-7} <4	Tin 2.2^{-6} <20
Copper 1.2^{-5} - 110/20	Phosphorus- not detrmd	Titanium 9.4^{-5} (840)
Gallium 1.1^{-6} <10	Platinum 5.6^{-6} <50	Tungsten 3.4^{-6} <30
Germanium 1.1^{-6} <10	Potassium 2.2^{-4} <0.2%	Vanadium 2.2^{-5} <200
Gold 3.4^{-6} <30	Rhenium 1.1^{-5} <100	Yttrium 1.1^{-6} <10
Hafnium 1.1^{-5} <100	Rhodium 5.6^{-7} <5	Zinc 4.7^{-5} - 420/50
		Zirconium 1.1^{-6} <10
		Other 6.2^{-2} - 554254.70

( ) semiquantitative

Σppm = 445745.30

0.112

KVB 5807-842

Wells 469-22
407-22

ARMAMENT SYSTEMS, INC.
712-F N. Valley St.
Anaheim, Calif. 92801
(714) 635-1524

impinger content 0.0845 gram

Vm Std. 0.623 DSCF (H_2O% 86.5)

2.09 grains/DSCF

4.2×10^{-4} lb/hr per well.

SANTA FE ENERGIES
Section 22, Fellows
WELL CASING EMISSIONS

ENERGY DISPERSIVE X-RAY ELEMENT ANALYSIS 9/ 5/78

Prepared for: KVB Engineering/Brunetz P.O.# 14430
Sample lable: 12 CW-2 Run # 789-139
Sample description: <1 micron particulates
Remarks: L.A. wet impingement method

Results are in micrograms per gram (dry wieght/estimated error) unless otherwise indicated.

Aluminum	- not detrmd	Indium	8.4^{-9} <20	Rubidium	4.2^{-9} <10
Antimony	1.3^{-8} <30	Iodine	1.7^{-8} <40	Ruthenium	4.2^{-9} <10
Arsenic	8.4^{-9} <20	Iridium	8.4^{-9} <20	Scandium	1.3^{-7} <300
Barium	1.5^{-5} 3.5%/1%	Iron	3.9^{-6} 9300/1000	Selenium	7.6^{-9} 18/3
Bismuth	1.3^{-8} <30	Lead	1.3^{-8} 30/5	Silicon	3.8^{-5} (9%)
Bromine	8.4^{-9} <20	Manganese	8.4^{-8} <200	Silver	4.2^{-9} <10
Cadmium	8.4^{-9} (20)	Mercury	3.9^{-7} 930/100	Strontium	3.6^{-7} 850/100
Calcium	4.2^{-5} 10%/2%	Molybdenum	1.7^{-8} (40)	Sulfur	4.0^{-5} 9.5%/2%
Cesium	2.5^{-8} <60	Nickel	2.1^{-8} (50)	Tantalum	1.3^{-8} <30
Chlorine	1.1^{-5} 2.7%/1%	Niobium	8.4^{-9} <20	Tellurium	1.3^{-8} <30
Chromium	1.3^{-7} <300	Osmium	2.1^{-8} <50	Thallium	1.3^{-8} <30
Cobalt	2.9^{-8} <70	Palladium	4.2^{-9} <10	Tin	1.3^{-8} <30
Copper	8.6^{-8} 190/20	Phosphorus	8.4^{-6} <2%	Titanium	2.1^{-7} <500
Gallium	4.2^{-9} <10	Platinum	1.3^{-8} <30	Tungsten	8.4^{-9} <20
Germanium	4.2^{-9} <10	Potassium	2.1^{-6} <0.5%	Vanadium	2.1^{-7} <500
Gold	1.3^{-8} <30	Rhenium	2.9^{-8} <70	Yttrium	8.4^{-9} <20
Hafnium	8.4^{-8} <200	Rhodium	4.2^{-9} <10	Zinc	2.2^{-7} 530/60
				Zirconium	1.7^{-8} <40
				Other	2.6^{-4} 613,262

( ) Semiquantitative

ΣPPM_m = 386,738

4.2^{-4}

KVB 5807-842

AGRICULTURE
CHEMICAL ANALYSIS
PETROLEUM

BC LABORATORIES, INC.

4100 PIERCE ROAD, 93308 BAKERSFIELD, CALIFORNIA 93308 PHONE 327-4911

KVB, Inc.
17332 Irvine Boulevard
Tustin, California 92680

Date Reported: 8/7/78
Date Received: 7/28/78
Laboratory No.: 6419 to 6426

Attention Mr. Nickolas Brunetz

GAS ANALYSES

Sample Description: Chanslor Western Section 22 Steam Recovery Line and Hot Wells 7/27/78

Sample	Source	Time	H_2S
CW-1/6	Steam knockout pot inlet line	14:00	100 : 140
CW-1/25	Steam knockout pot inlet line	14:00	120 : 170
CW-2/102	Well 469-22	15:45	-10 : -15
CW-2/2	Well 50-22	17:30	-10 : -15
CW-2/17	Well 407-22	16:37	-10 : -15
CW-2/23	Well 409-22	17:19	120 : 170
CW-2/13	Well 436-22	17:36	-10 : -15
CW-2/9	Well 436-22	17:36	-10 : -15

- refers to "less than".

Answers expressed as ppm : µg/liter as H_2S.

B C LABORATORIES, INC.

BY J. J. Eglin
J. J. Eglin

ch

KVB 5807-842

AGRICULTURE
CHEMICAL ANALYSIS
PETROLEUM
BC LABORATORIES, INC.
4100 PIERCE ROAD, 93308 BAKERSFIELD, CALIFORNIA 93308 PHONE 327-4911

KBV, Inc.
17332 Irvine Boulevard
Tustin, California 92680

Date Reported: 8/7/78
Date Received: 7/28/78
Laboratory No.: 6419 to 6426

Attention Mr. Nickolas Brunetz

GAS ANALYSES

Sample Description: Chanslor Western Section 22 Steam Recovery Line and Hot Wells 7/27/78

Sample	Source	Time	Total Hydrocarbon	Methane	Non Methane
CW-1/6	Steam knockout pot inlet line	14:00	259.3 : 175.5	203.2 : 137.5	56.1 : 38.0
CW-1/25	Steam knockout pot inlet line	14:00	297.7 : 201.5	218.4 : 147.8	79.3 : 53.7
CW-2/102	Well 469-22	15:45	7.3 : 4.9	6.3 : 4.3	1.0 : 0.7
CW-2/2	Well 50-22	17:30	0.2 : 0.1	0.1 : 0.1	0.1 : 0.1
CW-2/17	Well 407-22	16:37	248.8 : 168.4	177.8 : 120.3	71.0 : 48.1
CW-2/23	Well 409-22	17:19	463.8 : 313.9	215.9 : 146.1	247.9 : 167.8
CW-2/13	Well 436-22	17:36	198.0 : 134.0	165.1 : 111.7	32.9 : 22.3
CW-2/9	Well 436-22	17:36	176.3 : 119.3	152.4 : 103.1	23.9 : 16.2

Answers expressed as ppm : µg/liter as Methane.

B C LABORATORIES, INC.

BY J. J. Eglin
J. J. Eglin

ch

KVB

Sample Code CWOD 7-27-78

Tested by: N. Brunetz, F. Ducey, J. Macko

Date 7-27-79

STATEMENT OF PROCESS WEIGHT OR VOLUME

Firm Name SANTA FE ENERGY CO, CWOD,

Address Fellows, California Section 22

DATA ON OPERATING CYCLE TIME: 200 wells on vapor recovery } 400 wells on TOR
200 wells free venting

Start of Operation, Time

End of Operation, Time

Elapsed Time, Minutes

Idle Time During Cycle, Min.

Net Time of Cycle, Minutes

DATA ON MATERIAL CHARGED TO PROCESS DURING OPERATING CYCLE:

Material		Weight or Volume		
Material	Net Crude Oil Burned.		1200 BOD	~~lbs~~ 50,400 gal
Material				lbs, gal
Material	Gross (neat) Oil Produced			lbs, gal
Material	Santa Fe info. 15.5 BOD av./well.		6200 BOD	~~lbs, gal~~
Material				lbs, gal
Material				lbs, gal
Material				lbs, gal

Total:

Section 22 $\frac{\text{Produces 6200 BOD}}{\text{1200 BOD burned}}$ = 5.2 Barrel Oil produced per 1 Barrel Oil Burned

Signature N. Brunetz

Title test director

Reconfirmed by Jeff Adkins Prod. Engr. 8-10-1979 14:00 hr.

Individual Sample

Well data	Well No.	BOD	BWD	No. of days in Average	Wall head ΔT °F	Date of Account
	G-59-22	8	105	31	190 °F	5/17/78
9/76	G-233-22	9	102	31	220 °F	5/30/78
	G-467-22	114	122	31	190 °F	6/7/78
	G-496-22	66	66	31	200 °F	6/12/78
	G-498-22	60	997	31	180 °F	6/12/78

KVB 5804-1

122

INDEPENDENT AGENCY (RETA) TEST RESULTS OF SANTA FE ENERGY CO.
FIREFLOODING OPERATIONS

SUMMARY OF FIREFLOOD TEST RESULTS INLET AND EXHAUST

PARAMETERS DETERMINED	INLET	EXHAUST
1. Temperature (°F)	ambient	107
2. Moisture (%)	9.8	8.7
3. H_2 (Mole %)	-	7.9
4. N_2 (Mole %)	78.17	76.4
5. O_2 (Mole% - Mass Spec.)	20.85	0.4
6. O_2 (Volume % - Fyrite)[a]	20.8	1.0
7. CO_2 (Mole % - Mass Spec.)	0.03	7.8
8. CO_2 (Volume % - Fyrite)[a]	0	17.5
9. CO (ppm)	<1	7000
10. H_2S (Lbs/Hr)	-	42.3
11. SO_2 (ppm)	0	1.9
12. SO_3/SO_4 (ppm)	0	0.19
13. NO_x (ppm)[a]	3.7	2.4
14. THC[b] (ppm as Hexane)	16	33,600

[a] Average of at least two runs.

[b] THC - Total Hydrocarbons - for hydrocarbon breakdown by individual type and/or group see following table.

RETA-3216

CWOO APPLICATION FOR EXPANSION OF FIRE FLOODING OPERATIONS AT MIDWAY SUNSET - TO BARRY GARELLIC, ES

KVB 5807-842

GAS CHROMATOGRAPH ANALYSIS OF FIREFLOOD EXHAUST (250 ML GLASS BOTTLE COLLECTED 4/16/77)

Compound	ppm	Vol-%	Compound	ppm	Vol%
Methane	55,000	72.0	Hexanes	852	1.1
Ethane	7,180	9.4	*C_6 Cyclics and/or Hexenes	1,140	1.5
Ethene	378	0.5	Heptanes	271	0.3
Propane	3,370	4.4	*C_7 Cyclics and/or Heptenes	276	0.4
Propene	1,180	1.5	Octanes	642	0.8
Butanes	1,814	2.4	*C_8 Cyclics and/or Octenes	65	0.2
Butenes	1,240	1.6	Benzene	354	0.5
Pentanes	1,460	1.9	Toluene	350	0.5
Pentenes	475	0.6	Xylenes and/or Ethyl Benzene	276	0.4

* These compounds were present in such small amounts that a positive distinction could not be made between the cycloparaffins and the olefins.

Total Organic Carbon (TOC Analyzer) 33,600ppm as Hexane

Carbon Monoxide 7000. ppm (0.7% by volume)

Calculated Heating Value 126 Bt ⊮/ch foot (net)**

** Bt⊮ values taken from "Perry's Chemical Engineers Handbook", Fourth Edition, pp. 3-142 thru 3-144.

FIRE FLOOD VAPOR RECOVERY EHAUST
TENAX TUBE
4/16/77

Tenax Tube - GC/MS Analysis (Qualitative)

The following compounds or compound types were identified by GC/MS:

- Water
- Benzene
- Propane
- Hexenes

Propene	Hexynes and/or Hexadienes
Butanes	Heptanes
Butenes	Heptenes
Pentanes	Heptynes and/or Heptadienes
Pentenes	Carbon Disulfide
Hexanes	Thiophene

*The following were identified by retention time on the gas chromatogram:

Octanes	Octenes
Nonanes	Nonenes
Toluene	Xylenes and/or Ethylbenzene

*A component failure on the mass spectrometer occurred in the middle of the GC/MS run; consequently, mass spectrometer identification could not be made from that point on.

Note: The Tenax tube released a very large amount of material. Most of the chromatograph peaks were so large that the detector was saturated, and no quantitation was possible.

Condensate from Fire Flood Vapor Recovery System

This sample proved to be practically all water containing only traces of oily or organic matter with a distinctive phenolic odor.

A portion of the sample was analyzed by combustion in a stream of oxygen in a tube furnace for total organic carbon. The evolved carbon dioxide was absorbed in sodium hydroxide and determined by differential potentiometric titration.

Total Organic Carbon 0.01% by weight.

A 25 ml aliquot of liquid was extracted with 2 ml of carbon disulfide. A GC/MS analysis (qualitative) was made on the extracted material. This material was a mixture of phenolic compounds - mostly methyl-, ethyl-, and dimethyl phenols.

Santa Fe Energy, Fellows, Vapor recovery

PARTICULATE EMISSION CALCULATIONS CWAD - STEAM VENTS

Test No. CW1 Date 7-27-78 Location Chevron Western, Fellows Engr. Macko Olson Shimoto

Unit No. Vapor Rec. -2 Fuel _____ Sampling Train and Method CA Wet impingement.

Pitot Factor, Fs 1 Barometric Pressure, P_{bar} 29.35 (STO 0) in. Hg 3855.9 TSP 5405.6 mgm

Tot. Liquid Collected, V_{lc} 682 (STO 1) ml Total Particulate, M_n +249.7 (STO 2) m gm

Velocity Head, ΔP 0.03 (STO 3) iwg Stack Temp., Ts 160 (STO 4) °F Stack Area, As 0.43 (STO 5) ft^2

Sample Volume, Vm 45.02 (STO 6) ft^3 Stack Press., Psg +1.1" (STO 7) iwg Excess O_2, XO_2 % 20 (STO 8) %

Orifice Press. Diff., H 0.82 (STO 9) iwg Stack Gas Sp. Gravity, Gs 0.856 (24.78) (STO A) n.d.

Sample Time, θ 52 (STO B) min Nozzle Dia., Dn 0.5625 (STO C) in. Meter Temp., T_m 119 (STO D) °F

Select F_e	Oil (A)	Gas (B)	Coal (C)	Other:
SC Feet/10^4 Btu	92.2	87.4	98.2	(E)

Press (E) if meter is not temperature compensated.

1. Sample Gas Volume $Vm_{std} = 0.0334\ Vm(P_{bar} + H/13.6)\frac{520}{579}$ — 39.74 SCF } 72.07
2. Water Vapor $Vw_{std} = 0.0474\ V_{lc}$ — 32.33 SCF
3. Moisture Content Bwo = Eq. 2/(Eq. 1 + Eq. 2) — ORG 0.449 N.D.
4. Concentration a. $C = 0.0154\ Mn/Vm_{std}$ — TSP 21.0 | ORG 20.9 | INORGANICS 0.097 grains/DSCF
   b. $C = 2.205 \times 10^{-6}\ Mn/Vm_{std}$ — 3.0x10⁻³ | 00299 | 1.39×10^{-5} lb/DSCF
   c. C = Eq. 4b x 16.018 x 10^3 — 0.0 | 0.22 grams/DSCM
5. Abs. Stack Press. $Ps = P_{bar} \times 13.6 + Psg$ — 1.09 | 400.3 in. w abs.
6. Stack Gas Speed $Vs = 174\ Fs\ \sqrt{\Delta PTs}\sqrt{\frac{407}{Ps} \times \frac{1.00}{Gs}}$ — 4.31 | 817.4 ft/min
7. Stack Gas Flow Rate @ 70°F a. Qsw = Eq. 6 x As x $\frac{530}{Ts} \times \frac{Ps}{407}$ — 530 | 1.09 | 301 WSCF/min
   b. Qsd = Eq. 7a x (1. - Eq. 3) — CONDENS. 134 DSCF/min
8. Material Flow Ms = Eq. 7b x Eq. 4b x 60 — TSP 24.1 | ORG. 24.0 | INORGANICS 0.112 lb/hr
9. XO_2 factor $XO_2f = 2090/(20.9 - XO_2\%)$ — 2322 N.D.
10. Emission a. E = Eq. 4b x Fe x Eq. 9 — _____ lb/MMBtu
    b. E = Eq. 4c x Fm x Eq. 9 x 1000 — _____ ng/joule
11. % Isokinetic $I = \frac{14077 \times Ts(Vm_{std} + Vw_{std})}{\theta \times Vs \times Ps \times Dn^2}$ — 620 | 72.07 | 52 | 400.3 | .316 | 817.4 — 117 %

If calculating by hand:
1) Convert Ts and Tm to °R
2) Multiply EQ 1 by 530/Tm(°R) if meter not temperature compensated.
3) $F_m = 2.684 \times 10^{-5} \times F_e$

Data Sheet 6002-4
Revised 2/15/78

KVB 5807-842

Steam injected CWOD VAPOR RECOVERY
Section 22 SANTAPE ENERGIES KO POT

LOCATION Fellows Chanslor Western
UNIT Vapor Recovery Duct FUEL
OPERATORS

TEST NUMBER	CW-1
DATE	7-27-78
AMBIENT TEMPERATURE, °F	97 · 30%
METER VOL. (START/END)	8330.32 / 8375.34

Page ____ Of ____

Particulates — LA Wet Impingement Mthd.

Fuel Analysis (% By Weight)

C = H = S = O =
N = CO_2 = H_2O =
ASH = INERT =
DENSITY = HHV =

Nomograph Setup

P_{meter} = C =
P_{stack} = T_{stack} = 160°F
T_{meter} = 120 ΔP =
$\Delta H_@$ = Noz (Ideal) = "
% H_2O = 33 Noz (Actual) = 9/16
Y =

Imp.	Vol. (End)	Vol. (Start)	ΔVol. (ml)
#1	350	150	200
#2	350	150	200
#3	270	—	270
		Total	670

#4 (Silica Gel)	g (End)	g (Start)	Δ grams
	820	808	12

Total Vol. H_2O ____ ml

Filter# 105

Particulate Wts

Filter ____ mg
Acetone ____ mg
Total ____ mg

Sampling Time Per Point, Min.	Particulate Wt., mg	Condensate Vol., ml	Fuel Flow gal/hr	Load MW	C_{pitot}	Stack Press. In.Hg-Gauge	Barometric Pressure
15						+1.1 "H_2O	29.35

TEST RESULTS

Test Averages:
ΔP_s = 0.03 T_{stack} = 160 °F
ΔH = 0.82 T_{meter} = 119 °F
Sample Vol. = 45.02 ft^3

Sample Point	Time	ΔPs	ΔH	Meter Reading	Stack	Probe	Oven	Impingers In	Impingers Out	Meter Out	Meter In	O_2, %	Vac.
1441	1441		.85	8330.32	160		—	120	75	115	115		3
	+5	.03	.85	8334.9					75	115	118		~3.3
	+10		.80	8337.0					83	118	122		5.0
→	+15	.03	.85	8343.3					82	119	125		4.0
Nozzle	+20		.82	8347.6					85	120	128		3.5
	+25	.03	.80	8352.				118	78	121	130		3.5
→	+30		.82	8356.4					172	122	130		3.5
Move	+35	0.03	.82	8360.6					75	124	131		3.7
	+40		.82	8365.					78	127	131		3.7
→	45	0.05	.80	8369.9					70	125	130		3.7
	50	0.03	.81	8373.7				119	172	128	131		3.7
	52			8375.34	160					119			
			Stopped — excess condensate										
Average													

Percent O_2 = ____
$MW_{stack\ gas}$ = ____ (~28)
Velocity = ____ ft/sec
Total Sample Time = ____ min.
ISOKINETICS = ____ %

Particulate Emissions

____ lbs/10^6 BTU

COMMENTS:
Leak - 0.0

KVB 5807-842

KVB

Sample Code CW 1 7-27-78

Firm and Unit Chanslor Western Vapor Recovery
Fellows Section 22

Test No. CW-1 Page

Sampling Station Inlet pipe to Vapor Recovery Pot Date 7-27-78

GAS VELOCITY DATA

Static + 1.1 H_2O 97 °F 30% RH

Time Start									
Point	Vel.Head In. H_2O	Temp. °F	Vel. Ft/Sec.	Vel.Head In.H_2O	Temp. °F	Vel. Ft/Sec.	Vel.Head In.H_2O	Temp. °F	Vel. Ft/Sec.
1	.03	160°F	12.5						
2	.04		14.4						
3	.03		12.5						
4	.03		12.5						
5	.03		12.5						
Finish		160°F	12.9						

O_2 20 20 19.5

CO_2 8.5 8.0 8.0

A. Average Velocity (Traverse) Ft/Sec 12.9

B. Av. Velocity (Ref. Point) Ft/Sec

C. Flue Factor A/B — to be calculated

D. Pitot Correction Factor 1

E. Gas Density Correction Factor ~1~ assumed

F. Corrected Vel., AxDxE, Ft/Sec

or BxCxDxE, Ft/Sec

G. Area of Flue, Sq. Ft. 0.43

H. Average Flue Temp., °F 160

I. Flow Rate, FxGx60, CFM ~~0~~ 333

J. Flow Rate, 520 x J/(H+460), SCFM 279
assumed to be 195 dry SCFM

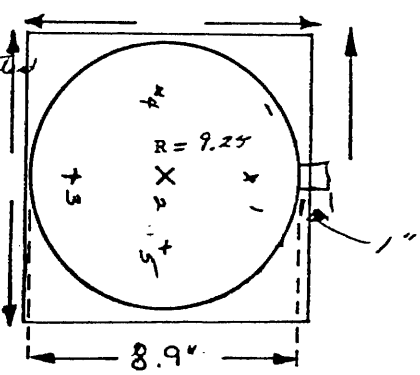

9/76

KVB 5807-842

Santa Fe Energy, Fellows 2 well vents

HP-67 KEYED CALCULATION SHEET*

PARTICULATE EMISSION CALCULATIONS 2 wells

Test No. CW 2 Date _____ Location Chanville W. Sect. 22 Engr. _____

Unit No. 469.22 ~~407-22~~ Fuel _____ Sampling Train and Method LA Co. Modified

Pitot Factor, Fs .83 Barometric Pressure, P_{bar} 29.35 (STO 0) in. Hg

Tot. Liquid Collected, V_{lc} 84 (STO 1) ml Total Particulate, M_n ~~84.5~~ 20325 (STO 2) m_m gm 20,409.5

Velocity Head, ΔP _____ (STO 3) iwg Stack Temp., Ts 175 (STO 4) °F Stack Area, As .0009 (STO 5) ft^2

Sample Volume, Vm .630 (STO 6) ft^3 Stack Press., Psg 3.15 (STO 7) iwg Excess O_2, XO_2% _____ (STO 8) %

Orifice Press. Diff., H _____ (STO 9) iwg Stack Gas Sp. Gravity, Gs _____ (STO A) n.d.

Sample Time, θ 22 (STO B) min Nozzle Dia., Dn .25 (STO C) in. Meter Temp., T_m 111 (STO D) °F

Select Fe	Oil (A)	Gas (B)	Coal (C)	Other:
SC Feet/10^4 Btu	92.2	87.4	98.2	(E)

Press (E) if meter is not temperature compensated.

1. Sample Gas Volume $Vm_{std} = 0.0334\ Vm(P_{bar} + H/13.6)$ — 0.440 Measured, 0.183, 0.623 SCF } 4.605
2. Water Vapor $Vw_{std} = 0.0474\ V_{lc}$ — 20409.5 | 84.5 | 20325.0 — 3.982 SCF
3. Moisture Content Bwo = Eq. 2/(Eq. 1 + Eq. 2) — .865 N.D.
4. Concentration a. $C = 0.0154\ Mn/Vm_{std}$ — TSP 504.5 | INORG 2.09 | ORG 502.4 — _____ grains/DSCF
   b. $C = 2.205 \times 10^{-6}\ Mn/Vm_{std}$ — 0.07 | 3×10^{-4} | 0.07 — _____ lb/DSCF
   c. $C = \text{Eq. 4b} \times 16.018 \times 10^3$ — _____ grams/DSCM
5. Abs. Stack Press. $Ps = P_{bar} \times 13.6 + Psg$ — _____ in. w abs.
6. Stack Gas Speed $Vs = 174\ Fs \sqrt{\Delta PTs} \sqrt{\frac{407}{Ps} \times \frac{1.00}{Gs}}$ — 31.8 ft/min
7. Stack Gas Flow Rate @ 70°F a. $Qsw = \text{Eq. 6} \times As \times \frac{530}{Ts} \times \frac{Ps}{407}$ measured after condensate knock out — _____ WSCF/min
   b. $Qsd = \text{Eq. 7a} \times (1. - \text{Eq. 3})$ — 0.623/22 — 0.0283 Av. DSCF/min/2 well
8. Material Flow $Ms = \text{Eq. 7b} \times \text{Eq. 4b} \times 60$ — 0.123 TSP | 5.1×10^{-4} | 1 inorg | 0.122 org. lb/hr
9. XO_2 factor $XO_2f = 2090/(20.9 - XO_2\%)$ — _____ N.D.
10. Emission a. $E = \text{Eq. 4b} \times Fe \times \text{Eq. 9}$ — _____ lb/MMBtu
    b. $E = \text{Eq. 4c} \times Fm \times \text{Eq. 9} \times 1000$ — _____ ng/joule
11. % Isokinetic $I = \frac{14077 \times Ts(Vm_{std} + Vw_{std})}{\theta \times Vs \times Ps \times Dn^2 + \Delta P}$ — 100 %

ΔP ΔT

Self driving: Source → condenser → meter →
flow rate regulated by source set

*If calculating by hand:
1) Convert Ts and T_m to °R
2) Multiply EQ 1 by $530/T_m$(°R) if meter not temperature compensated.
3) $F_m = 2.684 \times 10^{-5} \times F_e$

Data Sheet 6002-4
Revised 2/15/78

KVB 5807-842

Santa Fe Energy Well Vents

LOCATION Chanslor Western
UNIT S Wells
OPERATORS 469-22 FUEL 407-22
Self driving Steam Vent

TEST NUMBER	CW-2
DATE	7-27-78
AMBIENT TEMPERATURE, °F	94
METER VOL. (START/END)	685.935/685.935

Page ____ Of ____

Fuel Analysis (% By Weight)

C = H = S = O =
N = CO_2 = H_2O =
ASH = INERT =
DENSITY = HHV =

Nomograph Setup

P_{meter} = C =
P_{stack} = T_{stack} =
T_{meter} = ΔP =
$\Delta H_@$ = Noz (Ideal) =
% H_2O = Noz (Actual) =
▼ =

Imp.	Vol. (End)		Vol. (Start)		ΔVol. (ml)
#1	196.	−	100	=	water 76 oil 76 20
#2	106	−	100	=	6
#3	2	−	dry	=	2
				Total	84 ml
#4 (Silica Gel)	g (End)		g (Start)		Δ grams
	none	−	none	=	
				Total Vol. H_2O	84 ml

Filter# ____

Particulate Wts
Filter ____ mg
Acetone ____ mg
Total ____ mg

Sampling Time Per Point, Min.	Particulate Wt., mg	Condensate Vol., ml	Fuel Flow gal/hr	Load MW	C_{pitot}	Stack Press. In.Hg-Gauge	Barometric Pressure
						Steam drive +1.1" H_2O	29.35

TEST RESULTS

Test Averages:
ΔP_s = ____ T_{stack} = 175 °F
ΔH = ____ T_{meter} = ____ °F
Sample Vol. = 0.630 ft^3

Sample Point	Time	Meter Conditions ΔP_s	ΔH	Meter Reading	Temperatures, °F Stack	Probe	Oven	Impingers In	Impingers Out	Meter	O_2, %	Vac.
Well No. 469-22	4:10			554.00	180	not used						
	+3:48			554.440								+1.1" H_2O
+	4:22"			4.445	170							0
well		.490 cfo		.445	x	.0334	(32.5)	520/571	48	110		
407-22	5:07			685.750	170				50	112.5		0
	+10 min			685.935								
		.18340		.185	x.0334		(32.5)	520/571				+1.1" H_2O
Average												

Percent O_2 = ____
MW stack gas = ____ (~28)
Velocity = ____ ft/sec
Total Sample Time = ____ min.
ISOKINETICS = ____ %

Particulate Emissions
____ lbs/10^6 BTU

COMMENTS:

TEST:
SELF DRIVING
No pump is used.

KVB 5807-842

APPENDIX F

KVB-ARB THERMAL OIL RECOVERY
DATA BASE: MOBIL OIL CO., LOST HILLS

PARTICULATE TEST DATA BASE

MOBIL OIL CO
LOST HILLS

COMPANY NAME & TEST NO.							
MOBIL OIL CO LOST HILLS	wells	344, 304, 308 B		302			
Std. CF sampled DSCF		70.96		38.60			
water content %		43		18			
Mass Flowrate DSCFM		137		175			
EPA Meth. 5 (Front + Filter)	grams		0.0213		0.0041		
Total Particulates (Impingers included	grams		23.8223		5.2491		
INORGANICS COLLECTED	grams		0.1475		0.0126		
Organics (condensibles) COLLECTED	grams		23.6748		5.2365		

Front End
Filter + Wash
0.0213 grams/3 wells
V_{m} Std = 70.96 SCF
0.0046 grain/SCF
1.8×10^{-3} lb/hr/well

Mobil

Mobil Oil Page 1
Lost Hills Test 1

ARMAMENT SYSTEMS, INC.
712-F N. Valley St.
Anaheim, Calif. 92801
(714) 635-1524

MOBIL OIL

See next page
combined on 1 page.

ENERGY DISPERSIVE X-RAY ELEMENT ANALYSIS 1/16/79

Prepared for: KVB Engineering/N. Brunetz P.O.# 14533
Sample lable: Test 1 8/24/78 #111 Run # 789-152
Sample description: glass filter(net particulates - 0.0089g)
Remarks: apparent inconsistencies between blank (provided under P.O. 14430) and filter background may generate unreliable values for elements listed in low concentrations.

Results are in micrograms per square centimeter (dry weight/estimated error) A = 109 cm^2 at 0.0089 gram/filter = 8.2×10^{-5} g/cm^2 = 81.65 µg/cm^2

Aluminum	- not detrmd	Indium	- <0.07	Rubidium	- <0.04
Antimony	- <0.2	Iodine	- <0.2	Ruthenium	- <0.08
Arsenic	- <0.03	Iridium	- <0.8	Scandium	- <1
Barium	- <0.4	Iron	1.3^{-3} - 59/312	Selenium	- <0.05
Bismuth	- <0.05	Lead	2.9^{-6} (0.13)	Silicon	- not detrmd
Bromine	- <0.02	Manganese	- <0.2	Silver	- <0.08
Cadmium	- <0.1	Mercury	- <0.04	Strontium	1.8^{-5} - 0.80/0.1 ignore
Calcium	1.3^{-4} (4.8) ignore	Molybdenum	- <0.08	Sulfur	- <5
Cesium	- <0.3	Nickel	1.6^{-6} (0.093)	Tantalum	- <0.1
Chlorine	- <1	Niobium	- <0.2	Tellurium	- <0.2
Chromium	- <0.1	Osmium	- <0.2	Thallium	- <0.07
Cobalt	- <0.1	Palladium	- <0.08	Tin	- <0.2
Copper	- <0.05	Phosphorus	- <10	Titanium	- <0.4
Gallium	- <0.04	Platinum	- <0.08	Tungsten	- <0.08
Germanium	- <0.03	Potassium	- <0.8	Vanadium	- <0.2
Gold	- <0.09	Rhenium	- <0.06	Yttrium	- <0.2
Hafnium	- <0.2	Rhodium	- <0.09	Zinc	5.5^{-6} - 0.25/0.04
				Zirconium	1.5^{-5} - 0.69/0.1
				Other	3.5^{-4} 15.91

( ) semiquantitative

Σ µg/cm^2 = 89.05 µg/cm^2 > 81.65 Σ >+( ) = 65.74

KVB 5807-842

Impinger catch
inorganics
0.1262 grams
$V_{m\,std}$ = 70.96
027 grains/DSCF
0.011 lb/hr/well.

Mobil Oil
Lost Hills.

Page 2
Test 1.

ARMAMENT SYSTEMS, INC.
712-F N. Valley St.
Anaheim, Calif. 92801
(714) 635-1524

ENERGY DISPERSIVE X-RAY ELEMENT ANALYSIS 1/16/79

Prepared for: KVB Engineering/N. Brunetz P.O.# 14533
Sample lable: Test 1 8/21/78 Lost Hills Run # 789-150
Sample description: Impinger boildown
Remarks: beaker #25;beaker net 0.1262g.

Results are in micrograms per gram (dry weight/estimated error) unless otherwise indicated.

Aluminum	5.5^{-4} <5%	Indium	2.2^{-7} <20	Rubidium	1.1^{-7} <10
Antimony	4.4^{-7} <40	Iodine	5.5^{-7} <50	Ruthenium	1.1^{-7} <10
Arsenic	1.1^{-7} <10	Iridium	3.3^{-7} <30	Scandium	2.2^{-6} <200
Barium	3.0^{-4} 270/60	•Iron	7.5^{-4} 6.8%/0.8%	Selenium	1.1^{-7} (10)
Bismuth	3.3^{-7} <30	•Lead	8.0^{-7} 73/10	Silicon	4.4^{-4} <4%
Bromine	1.2^{-4} 110/20	Manganese	6.2^{-6} 560/100	Silver	1.1^{-7} <10
Cadmium	4.7^{-7} 43/7	Mercury	2.9^{-7} (26)	Strontium	1.4^{-6} 130/20
Calcium	6.2^{-5} 5600/600	Molybdenum	2.2^{-7} <20	Sulfur	2.3^{-3} 21%/4%
Cesium	7.7^{-7} <70	•Nickel	3.0^{-6} 270/40	Tantalum	5.5^{-7} <50
Chlorine	1.7^{-3} 15%/3%	Niobium	2.2^{-7} <20	Tellurium	4.4^{-7} <40
Chromium	9.9^{-7} <90	Osmium	4.4^{-7} <40	Thallium	4.4^{-7} <40
Cobalt	2.2^{-6} <200	Palladium	1.1^{-7} <10	Tin	4.4^{-7} <40
Copper	6.8^{-7} 62/10	Phosphorus	3.3^{-4} <3%	Titanium	3.3^{-6} <300
Gallium	1.1^{-7} <10	Platinum	3.3^{-7} <30	Tungsten	4.4^{-7} <40
Germanium	2.2^{-7} <20	Potassium	1.8^{-5} 1600/200	Vanadium	9.9^{-7} <90
Gold	4.4^{-7} <40	Rhenium	4.4^{-7} <40	Yttrium	3.3^{-7} <30
Hafnium	1.1^{-6} <100	Rhodium	1.1^{-7} <10	•Zinc	8.0^{-6} 730/80
				Zirconium	2.2^{-7} <20
				Other	4.8^{-3} 40,756

0.011

( ) semiquantitative

ΣPPM_m = 59,244

KVB 5807-842

Combining Mobil Oil Lost Hills Test 1 page 1 + page 2

Element	lb/hr-well
Alum.	5.5^{-4}
Antimony	4.4^{-7}
Arsenic	1.1^{-7}
Barium	3.0^{-6}
Bismuth	3.3^{-7}
Bromine	1.2^{-6}
Cadmium	4.7^{-7}
Calcium	6.2^{-5}
Cesium	7.7^{-7}
Chlorine	1.7^{-3}
Chromium	9.9^{-7}
Cobalt	2.2^{-6}
Copper	6.8^{-7}
Gallium	1.1^{-7}
Germanium	2.2^{-7}
Gold	4.4^{-7}
Hafnium	1.1^{-6}
Indium	2.2^{-7}
Iodine	5.5^{-7}
Iridium	3.3^{-7}
Iron	2.1^{-3}
Lead	3.7^{-6}
Manganese	6.2^{-6}
Mercury	2.9^{-7}
Moly.	2.2^{-7}
Nickel	4.5^{-6}
Niobium	2.2^{-7}
Osmium	4.4^{-7}
Palladium	1.1^{-7}
Phos.	3.3^{-4}
Platinum	3.3^{-7}
Potassium	1.8^{-5}

Element	lb/hr-well
Rhenium	4.4^{-7}
Rhodium	1.1^{-7}
Rubidium	1.1^{-7}
Ruthenium	1.1^{-7}
Scandium	2.2^{-6}
Selenium	1.1^{-7}
Silicon	4.4^{-4}
Silver	1.1^{-7}
Strontium	1.4^{-6}
Sulfur	2.3^{-3}
Tantalum	5.5^{-7}
Tellurium	4.4^{-7}
Thallium	4.4^{-7}
Tin	4.4^{-7}
Titanium	3.3^{-6}
Tungsten	4.4^{-7}
Vanadium	9.9^{-7}
Yttrium	3.3^{-7}
Zinc	1.4^{-5}
Zirconium	2.2^{-7}
Other	5.3^{-3}

Front End.
Filter + Wash. 0.0041 grams.
V_m Std = 38.6 SCF
0.0016 grains/DSCF
2.5×10^{-3} lb/hr.

Mobil Lost Hills
Test 2.

ARMAMENT SYSTEMS, INC.
712-F N. Valley St.
Anaheim, Calif. 92801
(714) 635-1524

ENERGY DISPERSIVE X-RAY ELEMENT ANALYSIS

1/16/79

Prepared for: KVB Engineering/N. Brunetz — P.O.# 14533
Sample lable: Test 2 8/25/78 Lost Hills — Run # 789-149
Sample description: impinger boildown
Remarks: beaker #27;beaker net 0.0085g

Results are in micrograms per gram (dry weight/estimated error) unless otherwise indicated.

Aluminum	2.5^{-4}	<10%	Indium	2.0^{-7}	<80
Antimony	5.0^{-7}	<200	Iodine	5.0^{-7}	<200
Arsenic	2.5^{-7}	98/20	Iridium	1.8^{-7}	<70
Barium	5.3^{-6}	2100/300	Iron	2.8^{-5}	1.1%/0.2%
Bismuth	1.3^{-7}	<50	Lead	1.0^{-6}	400/50
Bromine	5.0^{-7}	200/30	Manganese	4.8^{-7}	(190)
Cadmium	1.1^{-6}	420/50	Mercury	2.8^{-7}	(110)
Calcium	2.3^{-5}	9200/1000	Molybdenum	2.5^{-7}	<100
Cesium	7.5^{-7}	<300	Nickel	9.3^{-7}	370/50
Chlorine	8.8^{-4}	35%/5%	Niobium	2.0^{-7}	<80
Chromium	2.5^{-7}	<100	Osmium	5.0^{-7}	<200
Cobalt	7.5^{-7}	(300)	Palladium	1.8^{-7}	<70
Copper	2.2^{-6}	880/90	Phosphorus	7.5^{-5}	<3%
Gallium	7.5^{-8}	<30	Platinum	1.8^{-7}	<70
Germanium	1.5^{-7}	<60	Potassium	2.0^{-5}	8000/900
Gold	2.0^{-7}	<80	Rhenium	5.0^{-7}	<200
Hafnium	7.5^{-7}	<300	Rhodium	1.8^{-7}	<70

Rubidium	1.5^{-7}	<60
Ruthenium	1.8^{-7}	<70
Scandium	1.0^{-6}	<400
Selenium	5.0^{-8}	<20
Silicon	1.5^{-4}	<6%
Silver	1.5^{-7}	<60
Strontium	2.5^{-7}	<100
Sulfur	1.0^{-4}	<4%
Tantalum	5.0^{-7}	<200
Tellurium	2.5^{-7}	<100
Thallium	1.8^{-7}	<70
Tin	5.0^{-7}	<200
Titanium	7.5^{-7}	<300
Tungsten	5.0^{-7}	<200
Vanadium	5.0^{-7}	<200
Yttrium	2.5^{-7}	<100
Zinc	8.0^{-6}	3200/400
Zirconium	2.5^{-7}	<100
Other	9.5^{-4}	379,092

2.5×10^{-3}

( ) semiquantitative
Σ ppm$_m$ = 620,908

KVB 5807-842

mobil Oil Lost Hills Test 1 page 1

via Jim Kulik Armament Systems 1-31-79

Keep

	$\mu g/cm^2$	lb/hr-well
Iron	59	1.8^{-3}
Lead	0.13	2.9^{-6}
Nickel	0.073	1.5^{-6}
Zinc	0.25	5.5^{-6}
	59.45	
Other (= 81.65 − 59.45)	22.20	4.9^{-4}
		1.8^{-3}

$\frac{lb}{hr}\Big)_i =$

$$\frac{lb}{hr\text{-}well}\Big)_i = 1.8 \times 10^{-3} \left(\frac{[\mu g/cm^2]_i}{81.65} \right)$$

KVB 5807-842

AGRICULTURAL
CHEMICAL ANALYSIS
PETROLEUM

BC LABORATORIES, INC.

4100 PIERCE ROAD, 93308 BAKERSFIELD, CALIFORNIA 93308 PHONE 327-4911

KVB, Inc.
17332 Irvine Boulevard
Tustin, California 92680

Attention Mr. Nickolas Brunetz

Date Reported: 9/6/78
Date Received: 8/25/78
Laboratory No.: 7572 to 7581

GAS ANALYSES

Sample Description: Mobil Lost Hills, Well Vents 8/24/78 & 8/25/78

Sample Well	Volume % Methane	Non Methane	Total
Well 344	5.10	0.14	5.24
Well 308B	2.21	0.31	2.52
Well 304R	0.70	0.13	0.83
Well 317R	3.84	0.19	4.03
Well 302	0.85	0.10	0.95

Hydrogen Sulfide was found to be present in the samples; however we were not able to quantitatively analyze for it on the gas chromatograph due to interference from the hydrocarbons present.

B C LABORATORIES, INC.

BY J. J. Eglin
J. J. Eglin

ch

KVB 5807-842

MOBIL OIL CORP. FIREFLOOD OPERATIONS AT LOST HILLS
WELL LOCATIONS AND PRODUCTION DATA

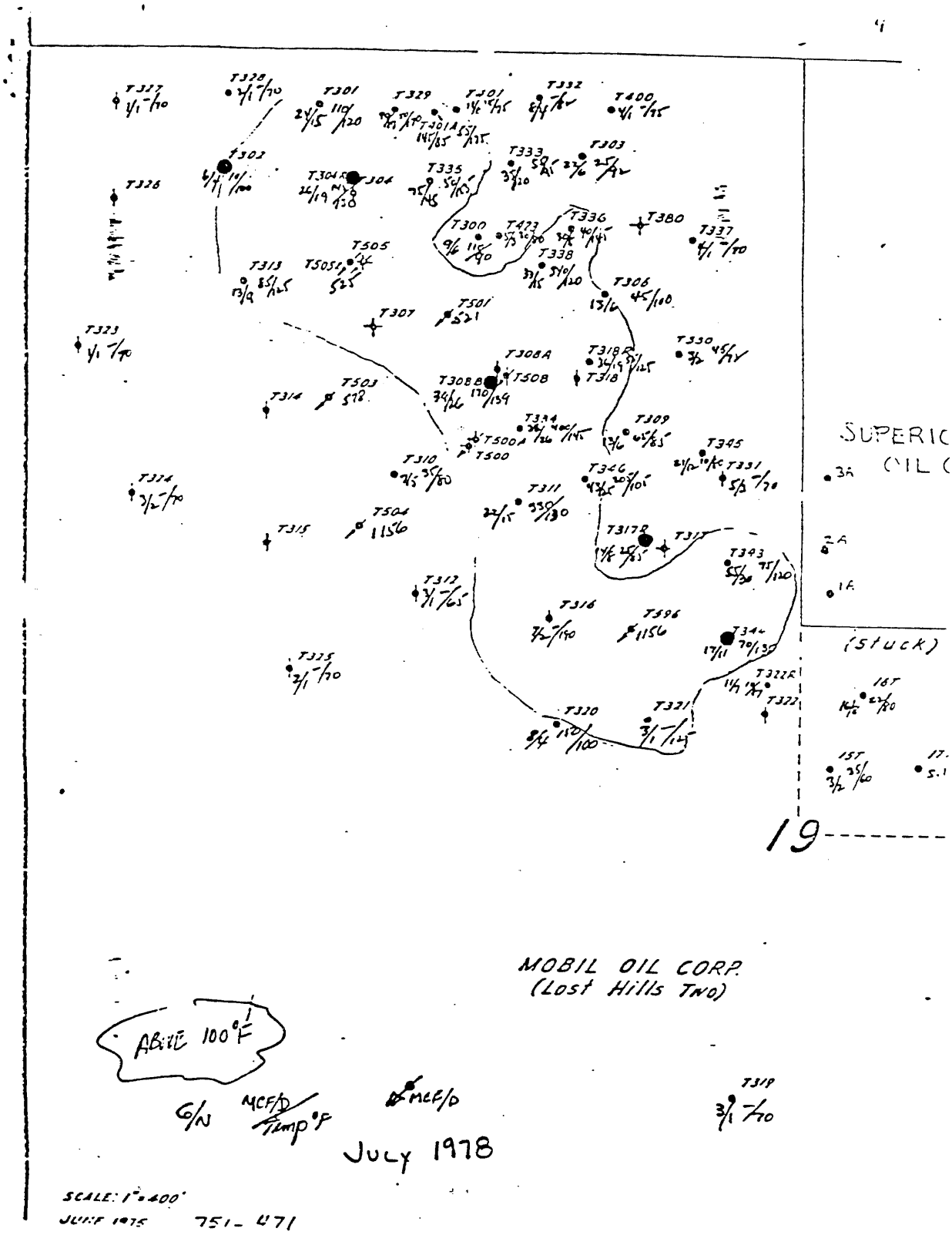

KVB 5807-842

MOBIL OIL CORPORATION
LOST HILLS TWO LEASE
THERMAL - FIRE FLOOD RECOVERY

8-25-1978
Data by C.D. Ellison

AVERAGES of WELL VENTS

well No.	Flow rate CF/Day	Vent Temp. °F	well No.	Flow rate SCFM @ 60°F	Vent Temp. °F
300	128,000	80	300	86	
301	114,000	125	301	70	
302	19,000	112	302	12	
303	22,000	90	303	14	
304	169,000	137	304	102	
306	49,000	104	306	31	
308B	169,000	125	308B	104	
309	48,000	83	309	32	
310	35,000	125	310	22	
311	359,000	130	311	220	
313	84,000	133	313	51	
317R	29,000	90	317R	19	
378R	49,000	128	378R	30	
322R	11,000	105	322R	7	
329	51,000	168	329	29	
330	45,000	98	330	29	
333	56,000	90	333	37	
334	445,000	142	334	267	
335	55,000	148	335	33	
343	77,000	125	343	48	
344	77,000	140	344	46	
345	7,000	95	345	5	
346	291,000	106	346	186	
401	7,000	85	401	5	
423	30,000	90	423	20	
15	39,000	85	15	26	
16	37,000	108	16	24	
			FIELD Total	1555 SCFM	

apparently data shows no orifice correction factor compensation
no gas density corr. factor (steam content)
no temp compensation.

KVB 5807-842

612 SOUTH FLOWER STREET
LOS ANGELES, CALIFORNIA 90051

MONTHLY OIL, WATER AND GAS PRODUCTION AND WATER AND GAS DISPOSITION REPORT

1 - DRY GAS
2 - OIL AND GAS
3 - GAS S[illegible]F
5 - LIQ[illegible] GASS[illegible] (WITHDRAW-ALIPHA[illegible]NE, BUTANE, OLEFIN ETC.)
9 - WATER SOURCE

1 - FLOWING
2 - JACK LINE
3 - BEAM ROD PUMP
4 - HYDRAULIC ROD PUMP
5 - BOTTOM - HOLE HYDRAULIC PUMP
6 - BOTTOM - HOLE ELECTRIC PUMP
7 - GAS LIFT
8 - OTHER

1 - EVAPORATION - PERCOLATION
2 - EVAPORATION (LINED SUMP)
3 - SURFACE WATER BODY
4 - SEWER SYSTEM
5 - SUBSURFACE INJECTION
6 - OTHER

1 - STANDING PENDING REWORK
2 - STANDING PENDING REDRILL
3 - STANDING PE ABANDONME.
4 - UNCOMPLETE.
5 - ABANDONED (L[illegible] APPROVED)
6 - SHUT-IN
7 - SHUT-IN PENDING PIPELINE

8 - OTHER
9 - OPERATOR CHANGE (REPORT PRODUCTION OCCURRING BEFORE CHANGE)

PAGE NO. 30 KERN

LOST HILLS THERMAL [illegible]
FIELD 05-T COUNTY

5 | 1978
MONTH | YEAR

FLD. CODE	LEASE CODE	MOBIL WELL NUMBER	API WELL NUMBER CNTY	API WELL NUMBER LEASE	POOL CODE	MONTHLY PRODUCTION BBLS. CLEAN OIL	BBLS. WATER	NET M.C.F. GAS	DISPOSITION CODE	NO PROD DAYS	DAILY AVERAGE OIL	DAILY AVERAGE WATER	% M & BS	OIL GRAVITY	DISPOSITION CODE	DISPOSITION CODE	DISPOSITION CODE	PRESSURE TUBING	PRESSURE CASI
	LOST HILLS THO T					Z00	S19 T26	R21											
05	1524	300	19 029	17763	10	184	67		2	31	6	2	26 7	14 4	3	2			
05	1524	301	19 029	17766	10	447	212		2	31	14	7	32 2	16 2	3	2			
05	1524	302	19 029	17767	10	168	67		2	31	5	2	28 5	16 0	3	2			
05	1524	303	19 029	17768	10	235	504		2	31	8	16	68 2	14 7	3	2			
05	1524	304R	19 029	52123	10	538	269		2	31	17	9	33 3	15 9	3	2			
05	1524	306	19 029	17770	10	235	269		2	31	8	9	53 4	16 0	3	2			
05	1524	306B	19 029	17765	10	923	428		2	31	30	14	31 7	15 4	3	2			
05	1524	309	19 029	17772	10	134	134		2	31	4	4	50 0	15 8	3	2			
05	1524	310	19 029	17773	10	168	101		2	31	5	3	37 5	17 2	3	2			
05	1524	311	19 029	17774	10	470	201		2	31	15	6	30 0	16 5	3	2			
05	1524	312	19 029	17775	10	130	30		2	28	5	1	18 8	13 6	3	2			
05	1524	313	19 029	17776	10	303	135		2	31	10	4	30 8	16 0	3	2			
05	1524	314	19 029	17777	10				2								6		
05	1524	315	19 029	17778	10				2								6		
05	1524	316	19 029	17779	10	33	132		2	31	1	4	80 0	13 8	3	2			
05	1524	317R	19 029	43805	10	269	202		2	31	9	7	42 9	18 1	3	2			
05	1524	318R	19 029	45213	10	597	416		2	31	19	13	41 1	17 3	3	2			
05	1524	319	19 029	17782	10	34	102		2	31	1	3	75 0	16 8	3	2			
05	1524	320	19 029	17783	10				2								6		
05	1524	321	19 029	17784	10	16	16		2	15	1	1	50 0	16 8	3	2			
05	1524	322R	19 029	48755	10	251	143		2	31	8	5	36 3	15 4	3	2			
05	1524	323	19 029	17786	10	34			2	31	1			16 2	3				
05	1524	324	19 029	17787	10	67			2	31	2			15 8	3				
05	1524	325	19 029	17788	10	34	34		2	31	1	1	50 0	15 6	3	2			
05	1524	326	19 029	17789	10				2								6		
05	1524	327	19 029	17790	10	33			2	31	1			14 1	3				
05	1524	328	19 029	17791	10	34			2	31	1			16 1	3				
05	1524	329	19 029	17792	10	17	1819		2	16	1	114	99 1	16 0	3	2			
05	1524	330	19 029	41215	10	68	102		2	31	2	3	60 0	15 3	3	2			
05	1524	331	19 029	41216	10	33	33		2	31	1	1	50 0	14 0	3	2			
05	1524	332	19 029	41231	10	135	169		2	31	4	5	55 6	14 6	3	2			
05	1524	333	19 029	41847	10	605	471		2	31	20	15	43 8	15 8	3	2			
05	1524	334	19 029	41848	10	974	470		2	31	31	15	32 5	16 4	3	2			

141

KVB 5807-842

MOBIL OIL CORPORATION
612 SOUTH FLOWER STREET
LOS ANGELES, CALIFORNIA 90051

MONTHLY OIL, WATER AND GAS PRODUCTION
AND WATER AND GAS DISPOSITION REPORT

PAGE NO. 31 KERN
LOST HILLS THERMAL 5 1978
FIELD 05-T COUNTY MONTH YEAR

PRODUCTION TYPE CODES
DRY GAS
OIL AND GAS
GAS STORAGE WITHDRAWAL
LIQUIFIED PETROLEUM GAS STORAGE WITHDRAWAL (PROPANE, BUTANE, OLEFIN, ETC.)
9 - WATER SOURCE

METHOD OF OPERATION CODES
1 - FLOWING
2 - JACK LINE
3 - BEAM ROD PUMP
4 - HYDRAULIC ROD PUMP
5 - BOTTOM - HOLE HYDRAULIC PUMP
6 - BOTTOM - HOLE ELECTRIC PUMP
7 - GAS LIFT
8 - OTHER

WATER DISPOSITION CODES
1 - EVAPORATION - PERCOLATION
2 - EVAPORATION (LINED SUMP)
3 - SURFACE WATER BODY
4 - SEWER SYSTEM
5 - SUBSURFACE INJECTION
6 - OTHER

REASON WELL IS NOT PRODUCING
1 - STANDING PENDING RE
2 - ST 1 PENDING RI
3 - ST. 3 PENDING ABANDONMENT
4 - UNCOMPLETED
5 - ABANDONED (DOG APPROVED)
6 - SHUT-IN
7 - SHUT-IN PENDING PIPELINE
8 - OTHER
9 - OPERAT REPORT OCCURR CHANGE

FLD. CODE	LEASE CODE	MOBIL WELL NUMBER		API WELL NUMBER CNTY	LEASE	POOL CODE	MONTHLY PRODUCTION BBLS. CLEAN OIL	BBLS. WATER	NET M.C.F. GAS	WELL TYPE	NO. PROD DAYS	DAILY AVERAGE OIL	WATER	% M & BS	OIL GRAVITY					PR TUBIN
	LOST HILLS THO T						Z00	S19. T26	R21											
05	1524	335	19	029	43757	10	1074	728		2	31	35	23	40	4	16	3	3	2	
05	1524	336	19	029	43758	10	101	67		2	31	3	2	39	9	16	1	3	2	
05	1524	337	19	029	43763	10	34	136		2	31	1	4	80	0	13	8	3	2	
05	1524	338	19	029	45214	10	516	583		2	31	17	19	53	0	14	8	3	2	
05	1524	343	19	029	47166	10	963	807		2	31	31	26	45	6	16	1	3	2	
05	1524	344	19	029	46744	10	436	201		2	31	14	6	31	6	17	2	3	2	
05	1524	345	19	029	47396	10	370	269		2	31	12	9	42	1	15	5	3	2	
05	1524	346	19	029	47397	10	806	537		2	31	26	17	40	0	15	5	3	2	
05	1524	400	19	029	17762	10	67	34		2	31	2	1	33	7	13	6	3	2	
05	1524	401	19	029	17793	10	100	33		2	31	3	1	24	8	15	6	3	2	
05	1524	401A	19	029	47167	10	159	189		2	7	23	27	54	3	17	2	3	2	
05	1524	423	19	029	17701	10	101	67		2	31	3	2	39	9	16	5	3	2	
05	1524	SECT					11896	10177		12	13	384	328	46	1	16	0			
05	1524	ZONE					11896	10177		12	13	384	328	46	1	16	0			
		41			ZONE PRODUCING															
05	1524	LSE					11896	10177		12	13	384	328	46	1	16	0			
		41			LSE PRODUCING															
05		FLD					11896	10177		12	13	384	328	46	1	16	0			
		41			PRODUCING															
		4			SHUT IN															
		45			TOTAL WELLS															
	GAS DISPOSITION																			

142

KVB 5807-842

MOBIL OIL CORPORATION
612 SOUTH FLOWER STREET
LOS ANGELES, CALIFORNIA 90051

MONTHLY INJECTION WELL REPORT

WELL TYPE CODES	KIND OF WATER CODES	SOURCE OF WATER CODES	REASON FOR INJECTING CODE
0 - AIR INJECTION 3 - GAS STORAGE INJECTION 4 - PRESSURE MAINTENANCE (GAS INJECTION) 5 - LIQUIFIED PETROLEUM GAS STORAGE INJECTION (PROPANE, BUTANE, OLEFIN, ETC.) 6 - WATER DISPOSAL 7 - WATER FLOOD 8 - STEAM FLOOD A - CYCLIC STEAM	1 - SALINE 2 - FRESH 3 - CHEMICAL MIXTURE 4 - OTHER	1 - OIL OR GAS WELL 2 - WATER SOURCE WELL 3 - DOMESTIC WATER SYSTEM 4 - OCEAN 5 - INDUSTRIAL WASTE 6 - DOMESTIC WASTE 7 - OTHER	1 - STANDING [illegible] REWORK 2 - STANDING P[illegible] REDRILL 3 - STANDING [illegible] ABANDONMENT 4 - UNCO[illegible] 5 - ABANDONED [illegible] APPROVED 6 - SHUT-DOWN 8 - OTHER 9 - OPERATOR CHANGE

LEASE NO 5 KERN
FIELD LOST HILLS THERMAL COUNTY 5 MONTH 1 YEAR 1978
POOL 05-T

D. DE	LEASE CODE	MOBIL WELL NUMBER		API WELL NUMBER CNTY	LEASE	POOL CODE	WELL TYPE	WATER OR STEAM INJECTED (BBLS)	GAS OR AIR INJECTED (MCF)	NO. DAYS	SURFACE PRESSURE INJECTION				
LOST HILLS THU T								Z00	S19 T26 R21						
5	1524	501	19	029	17796	00	0		15882	31	70				
5	1524	503	19	029	17797	00	0		16946	31	42				
5	1524	504	19	029	17798	00	0		28156	31	72				
5	1524	505R	19	029	52124	00	0		9745	22	50				
5	1524	506	19	029	17915	00	0							1	
5	1524	596	19	029	17799	10	0		37236	31	51				
5	1524	SECT							107965	146					
5	1524	ZONE							107965	146					
					ZONE INJECTION										
5	1524	LSE							107965	146					
					LSE INJECTION										
5		FLD							107965	146					

KVB 5807-842

FLUE GAS VENT FLOW RATES ON 4 TEST WELLS FROM MOBIL OIL CORP. RECORDING

Cost Hill 2J Sec 19

Wells	Rate MCFD
302	120
304R	135
308B	129
317R	6
344	94

For 8-24-78

#1 Comp Running total Air Injected 1800 MCFD

Gas Rate for #1 Comp 149 MCFD/Day

C. D. Ellison

KVB 5807-842

Average of 3 wells in 1 sample train.

PARTICULATE EMISSION CALCULATIONS

Test No. 1 Date 8-24-1978 Location LOST HILLS MOBIL Engr. N. Brunelz J. Macko

wells 344, 304 Unit No. 308 B Fuel Fire flood Sampling Train and Method Joy Method 5

Pitot Factor, Fs .835 Barometric Pressure, P_{bar} _____ in. Hg

Tot. Liquid Collected, V_{lc} 1158 ml = 35.9 HC condensate ml Total Particulate, M _____ n gm

3 well heads, see meter sheets

Velocity Head, ΔP _____ iwg Stack Temp., Ts — °R Stack Area, As — ft^2

* well 344 28.56, well 304 18.45, well 308 B 23.95 SCF – calculated *

Sample Volume, Vm _____ ft^3 Stack Press., Psg _____ iwg Excess O_2, XO_2% 6.2% 6.2%

Orifice Press. Diff., H _____ iwg Stack Gas Sp. Gravity, Gs _____ n.d.

Sample Time, θ 80 min Nozzle Dia., Dn 0.5016 in. Av/time Distr. Meter Temp., T _____ °R

						solids + extracts		solids + extracts + condensate	
						M_R _____ gm		M_R _____ n gm	
						filter + inorganic residue + extracted H_2O sol. org.		all organic mist condensed in impingers + water residue inorg. + filter	
						* well 344 29.56 ft^3 .98 Hwg nozzle 0.625 inch, 35 minutes Tm 520/541 (39.77% of total)			
						well 304 19.33 ft^3 1.06 Hwg nozzle 0.875 in. 20 minutes 520/545 (26.01% of total)			
						well 308 B 25.45 ft 1.3 H nozzle 0.3125 in. 25 minutes 520/556 (34.22% of total)			
1.	Sample Gas Volume	$Vm_{std} = 0.0334\ Vm(P_{bar} + H/13.6)\frac{520°R}{T_{m_{Av}}}$	INORGANICS 70.96	SCF	70.96	SCF	ORGANIC CONDENSATE 70.96	SCF
2.	Water Vapor	$Vw_{std} = 0.0474\ V_{lc}$ TSP NO IMPINGERS	53.19	SCF	53.19	SCF	53.19	SCF
3.	Moisture Content	Bwo = Eq. 2/(Eq. 1 + Eq. 2)	0.43	N.D.	0.43	N.D.	0.43	N.D.
4.	Concentration a.	$C = 0.0154\ Mn/Vm_{std}$ 0.0046	0.037	grains/DSCF		grains/DSCF	5.17	grains/DSCF
	b.	$C = 2.205 \times 10^{-6}\ Mn/Vm_{std}$ 6.6×10^{-7}	5×10^{-6}	lb/DSCF		lb/DSCF	7.4×10^{-4}	lb/DSCF
	c.	C = Eq. 4b x 16.018 x 10^3	7.34×10^{-2}	grams/DSCM		grams/DSCM	11.86	grams/DSCM
5.	Abs. Stack Press.	$Ps = P_{bar} \times 13.6 + Psg$		in. w abs.		in. w abs.		in. w abs.
6.	Stack Gas Speed	$Vs = 174\ Fs \sqrt{\Delta PTs}\sqrt{\frac{407}{Ps} \times \frac{1.00}{Gs}}$		ft/min		ft/min		ft/min
		well 344 = 22.9 WSCFM, w. 304 = 129 WSCFM, w. 308 B 89.3 WSCFM						
7.	Stack Gas Flow Rate @ 70°F a.	$Qsw = \text{Eq. } 6 \times As \times \frac{530}{Ts} \times \frac{Ps}{407}$	241	WSCF/min	241	WSCF/min	241	WSCF/min
	b.	Qsd = Eq. 7a x (1. – Eq. 3)	137	DSCF/min	137	DSCF/min	137	DSCF/min
8.	Material Flow	Ms = Eq. 7b x Eq. 4b x 60 1.8×10^{-3}	1.3×10^{-2}	lb/hr		lb/hr	2.03	lb/hr
9.	XO_2 factor	$XO_2f = 2090/(20.9 - XO_2\%)$ Av.	104	N.D.	104	N.D.	104	N.D.
10.	Emission a.	E = Eq. 4b x Fs x Eq. 9		lb/MMBtu		lb/MMBtu		lb/MMBtu
	b.	E = Eq. 4c x Fm x Eq. 9 x 1000		ng/joule		ng/joule		ng/joule
11.	% Isokinetic	$I = \frac{14077 \times Ts(Vm_{std} + Vw_{std})}{\theta \times Vs \times As \times Ps \times Dn^2}$ 623 124.15 80 149 408 0.2516 92 %	Averaged 92%				92 %	

		Oil	Gas	Coal
Fs	SC Feet/10^4 Btu	92.2	87.4	98.2
Fm	SC Meters/10^4 joules	0.002475	0.002346	0.002636

*Multiply Vm_{std} by 530/T_m(°R) if meter not temp. compensated.

see velocity sheets. →

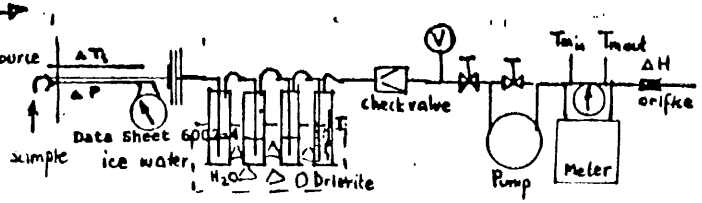

KVB 5807-842

CALCULATION OF INTEGEATED ISOKINETIC SAMPLING RATES

$$I\% = \frac{14077 \times T_s \times (V_m + V_{w\,std})}{\Theta \times V_s \times P_s \times D_n^2}$$

where Θ is 35 min. well 344 $35/80 = .438$ of total time
20 min. well 304 $20/80 = .250$
25 min. well 308 B $25/80 = .312$
$\Theta = 80$

V_s is 547 ft/min. well 344 $547 \times .437$ time $= 239.6$ ft/min
3174 " well 304 $3174 \times .250 = 793.5$
1302 " well 308 B $1302 \times .312 = 406.2$
$V_s = 1439$ ft/min.

$V_{m\,std.}$ is 28.56 scf well 344 $\frac{28.56}{70.96} = .402$
18.45 " well 304 $\frac{18.45}{70.96} = .260$
23.95 " well 308 B $\frac{23.95}{70.96} = .3375$

D_n nozzle diam is $5/8 = .625$ in. well 344 to flow .402 vol. = .2515 in.
$5/16 = .3125$ in. well 304 .260 vol. = .0813 "
$1/2 = .500$ in well 308B " .3375 vol. = .1688 "
to flow sample 100% vol nozzle is = 0.5016 in.
$D_n = 0.5016$ $D_n^2 = 0.2516$

$V_{w\,std}$ is = 1158 ml condensate — 35.9 ml hydrocarbon separated out
$V_{w\,std} = 1122$ ml $1122 \times 0.0474 = 53.19$ SCF @ 520°R

T_s is 608°R well 344 of .4024 Volume = 245°
628°R well 304 of .1845 volume = 163°
638°R well 308B of .2395 volume = 215°
$T_s = 623$°R

P_s = 408 iwg well 344 of .438 time = 178.7
409 iwg well 304 of .250 Time = 102.3
408 iwg well 308 of .312 time = 127.3
408.3 = 408 iwg.

See page 2.

$$I\% = \frac{14077 \times T_s \times (V_m + V_w)_{std}}{\theta \times V_s \times P_s \times D_m^2}$$

$$I\% = \frac{14077 \times 623\ (124.15)}{80 \times 1439 \times 408 \times 0.2516} = 92.13\%$$

KVB 5807-842

Page 1

Wells 344-304-308 ils

LOCATION LOST HILLS
UNIT _____ FUEL _____
OPERATORS [illegible]

TEST NUMBER	LOST HILL WELL 344-304-308
DATE	8-24-78
AMBIENT TEMPERATURE, °F	72 RH 61%
METER VOL. (START/END)	8376.51 /

Page 1 Of ____

Fuel Analysis (% By Weight)

C = S = O =
CO_2 = H_2O =
ASH = INERT =
DENSITY = HHV =

Nomograph Setup

P_{meter} = C =
P_{stack} = T_{stack} =
T_{meter} = ΔP =
$\Delta H_@$ = Noz (Ideal) = .64
% H_2O = Noz (Actual) = 5/8 3/16

Imp.	Vol. (End)	Vol. (Start)	ΔVol. (ml)
#1		100	
#2		100	
#3		0	
		Total	
#4 (Silica Gel)	g (End)	g (Start)	Δ grams
		852.6	
		Total Vol. H_2O	ml

Filter# ____
Particulate Wts
Filter ____ mg
Acetone ____ mg
Total ____ mg

Sampling Time Per Point, Min.	Particulate Wt., mg	Condensate Vol., ml	Fuel Flow gal/hr	Load MW	C_{pitot}	Stack Press. In.Hg-Gauge	Barometric Pressure
					.535 Spinial	+.01 " H_2O	30.03

TEST RESULTS

Test Averages:
ΔP_s = .02 T_{stack} = ____ °F
ΔH = 1.0 T_{meter} = ____ °F

Sample Vol. = ____ Ft³

Percent O_2 = ____
$MW_{stack\ gas}$ = ____ (~28)
Velocity = 56 ft/sec
Total Sample Time = 35 min.
ISOKINETICS = ____ %

Assumed Moisture 20% Nozzle 5/8

Sample Point	Time	METER CONDITIONS ΔP_s	ΔH	Meter Reading	TEMPERATURES, °F Stack	Probe	Oven	Impingers In	Impingers Out	Meter	O_2, %	Vac.
	1012	.02	.85	8376.51	148	—	210			70/[illegible]	1-2%	
R	7	.02	.92	8382.4	148	—	270	170	50	77/72		3
	14	.02	.93	8388.13	148		270	185	60	82/72		3
	23	.02	.95	8395.5	148		270	195	72	82/72		3
	28	.02	1.1	8400.0	148		270	190	68	95/80		3
055	35	.02	1.1	8406.07	148		270	190	68	95/80		3
			.78									
	~~1200~~	~~.66~~	~~1.~~	~~8[illegible]~~								
	1200	.66	1.1	8407.05	168		340	120	55	87/82	.2%	16.5
	8	.66	1.1	8414.6	168		330	115	65	90/82		16.5
	143	.66	1.05	8420.3	168		340	155	75	95/85		16.5
	20	.66	1.0	8425.4	168		345	155	75	95/85		16.5
				See Page 2								
Average												

Well 344 — Well 344 — Well 304 — Well 304

Particulate Emissions
____ lbs/10^6 BTU

COMMENTS: Leak rate
start .03 cfm well 344
end .03 cfm
start .03 cfm well 304
end .02 cfm

148

KVB 5807-842

KVB

LOCATION
UNIT — FUEL
OPERATORS
Train type: Page 2 of Wells

TEST NUMBER 344 - 304 - 303
DATE 3-27-73
AMBIENT TEMPERATURE, °F
METER VOL. (START/END)

Page Page 2 of

Fuel Analysis (% By Weight)

C = S = O =
N = CO_2 = H_2O =
AS INERT =
DENSITY HHV =

Nomograph Setup 344 304R 304B

P_{meter} = C =
P_{stack} = T_{stack} =
T_{meter} = ΔP =
$\Delta H_@$ = Noz (Ideal) =
% H_2O = Noz (Actual) = 1/2
Y =

Imp.	Vol. (End)	Vol. (Start)	ΔVol. (ml)
#1	680	100	580
#2	230	100	130
#3	315	0	315
		Total	1025

#4 (Silica Gel)	g (End)	g (Start)	Δ grams
	986.0	852.6	133

35.9 ml HC liquid from this Total Vol. H_2O 1158 − 36

Filter#
Particulate Wt:
Filter ___ mg
Acetone ___ mg
Total ___ mg

Sampling Time Per Point, Min	Particulate Wt., mg	Condensate Vol., ml	Fuel Flow gal/hr	Load MW	C_{pitot}	Stack Press. In.Hg-Gauge	Barometric Pressure
					.835	+.01 "H_2O	30.03

40 / 12 TEST RESULTS
Test Averages
ΔP_s = Stack = °F
ΔH = Meter = °F
Sample Vol. = ___ Ft^3

Sample Point	Time	METER CONDITIONS ΔP_s	ΔH	Meter Reading	TEMPERATURES, °F Stack	Probe	Oven	Impingers In	Impingers Out	Meter In	Meter Out	O_2, %	Vac.
				8425.4									
Well		.11											
304B	20.5		1.1	8425.7	178		320	165	55	90	90		6.5
	27.0	.11	1.2	8432.5	"		310	165	60	95	90		7.0
	14.0	.11	1.4	8439.7	"		310	140	90	100	91		11.0
	21.0	.11	1.3	8446.8	"		315	130	70	105	95		11.0
	25.0	.11	1.3	8450.85	"		330	135	72	105	95		11.0
			1.3								90		
stop watch		2436 MW											
										Av.	Av.		

Percent O_2 = ___
MW_{stack} = ___ (~28
Velocity = ___ ft/se
Total Sample Time = ___ min.
ISOKINETICS = ___ %

Particulate Emissions
___ lbs/10^6 B

COMMENTS: leak .025 cfm
end .025 cfm

149

KVB 5807-842

KVB

Sample Code LOST HILLS Well 344-19

Firm MOBIL OIL

Test No. LH 344-19 Page Barometer 30.03

Sampling Station Well Vent Mobil 344-19 Date 8-24-78

Sect. 19 T 26 S R 21 E MDM

GAS VELOCITY DATA 68°F RH 61% static Pres +.01" H_2O

Time Start									
Point	Vel.Head In. H_2O	Temp. °F	Vel. Ft/Sec.	Vel.Head In.H_2O	Temp. °F	Vel. Ft/Sec.	Vel.Head In.H_2O	Temp. °F	Vel. Ft/Sec.
1	.01	148	2.9	.02	148				
2	.01			.02					
3	.01			.02					
4	.01			.02					
R	.01			.02					
1	.010	148							
2	.015								
3	.015								
4	.015								
R	.015								
1	.01								
2	.01								
3	.01								
4	.015								
R	.01								
	$\bar{x}$ = 0.11								
	0.0124	148	7.75						
	~~$\bar{x}$ (9.7 x 10^-3)~~			.02	148	10.11			
Finish	.009								

A. Average Velocity (Traverse) Ft/Sec ~~7.75~~ 10.11

B. Av. Velocity (Ref. Point) Ft/Sec

C. Flue Factor A/B

D. Pitot Correction Factor .825

E. Gas Density Correction Factor ass. ~~.99~~ 1.08

F. Corrected Vel., AxDxE, Ft/Sec ~~6.6~~ 9.12 ~~8.44~~

or BxCxDxE, Ft/Sec

G. Area of Flue, Sq. Ft. ~~0.049~~ 4.9×10^{-2}

H. Average Flue Temp., °F 148

I. Flow Rate, FxGx60, CFM ~~[illegible]~~ 268

J. Flow Rate, 520 x J/(H+460), SCFM 229

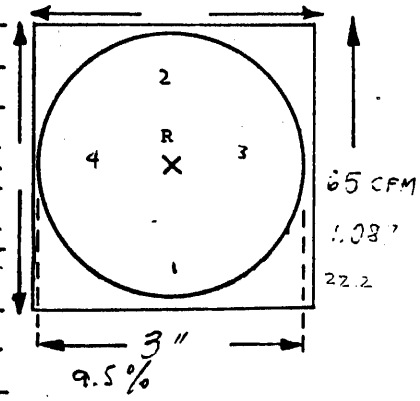

9/76

KVB 5807-842

Firm and Unit WELL 34Y MOBIL LOST HILLS

Test No. 34Y WELL

Page

Sampling Station MOBIL LOST HILL

Date 8-24-78

WATER VAPOR AND GAS DENSITY CALCULATIONS

Percent Water Vapor in Gases

A. Gas Pressure at Meter, In. Hg (Absolute)

B. Vapor Pressure of Water at Impinger Temp., In. Hg

C. Volume of Metered Gas, Cu. Ft.

D. Volume of Water Vapor Metered, BXC/A, Cu.Ft.

E. Volume of Water Vapor Condensed, Cu.Ft.*

F. Total Volume of Water Vapor in Gas Sample, D+E, Cu.Ft.

G. Total Volume of Gas Sample, C+E, Cu.Ft.

H. % Water Vapor in Sampled Gas, 100 x F/G

* See D on sampling train data sheet

Gas Density Correction Factor

10" IN Fyrite

Component	Volume Percent	X Moisture Collection	X Mol.Wt.=	Weight Per Mole Wet Basis
Water	.44	1.0	18.0	7.92
CarbonDioxide	Dry Basis 14.5	15 .56	44.0	3.57
CarbonMonoxide	Dry Basis .1 %	.56	28.0	0.02
Oxygen	Dry Basis 2%	.56	32.0	0.36
Nitrogen + Inerts	Dry Basis 83.4	.56	28.2	13.17
			Average Molecular Weight	25.04

J. Density of Gas Referred to Air = $\frac{\text{Av.Mol.Wt.}}{28.95}$ = 0.865

K. gas density corr. factor = $\sqrt{\frac{1.00}{J}}$ = 1.08

9/76

KVB 5807-842

Sample Code: WELL 304 R

Firm and Unit MOBIL - LOST HILLS

Test No. 304 R

Page

Sampling Station Well Vent Fire Flooding

Date 8-24-78

Static Pres +.27" H_2O

GAS VELOCITY DATA

Time Start									
Point	Vel.Head In. H_2O	Temp. °F	Vel. Ft/Sec.	Vel.Head In.H_2O	Temp. °F	Vel. Ft/Sec.	Vel.Head In.H_2O	Temp. °F	Vel. Ft/Sec.
1	.70	168							
2	.68								
3	.70								
4	.61								
R	.71								
1	.69								
2	.70								
3	.70								
4	.69								
R	.71	168							
	$\sqrt{x}$ .819								
Finish	0.663	168	59.2						

A. Average Velocity (Traverse) Ft/Sec 59.2

B. Av. Velocity (Ref. Point) Ft/Sec

C. Flue Factor A/B

D. Pitot Correction Factor .835

E. Gas Density Correction Factor 1.07

F. Corrected Vel., AxDxE, Ft/Sec 52.9 ~~46.9~~ ~~50.4~~

or BxCxDxE, Ft/Sec

G. Area of Flue, Sq. Ft. 0.049

H. Average Flue Temp., °F 168°F 628°R

I. Flow Rate, FxGx60, CFM 156

J. Flow Rate, 520 x J/(H+460), SCFM 129

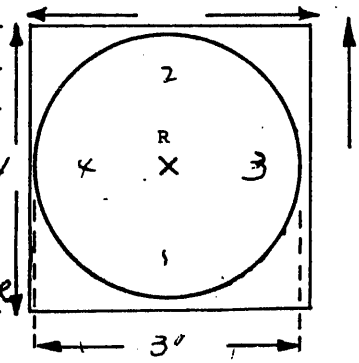

KVB 5807-842

Sample _____ _____ _____

Firm and Unit _____

Test No. 304R

Page _____

Sampling Station MOBIL LOST HILLS

Date 8-24-75

WATER VAPOR AND GAS DENSITY CALCULATIONS

Percent Water Vapor in Gases

A. Gas Pressure at Meter, In. Hg (Absolute) _____

B. Vapor Pressure of Water at Impinger Temp., In.Hg _____

C. Volume of Metered Gas, Cu. Ft. _____

D. Volume of Water Vapor Metered, BxC/A, Cu.Ft. _____

E. Volume of Water Vapor Condensed, Cu.Ft.* _____

F. Total Volume of Water Vapor in Gas Sample, D+E, Cu.Ft. _____

G. Total Volume of Gas Sample, C+E, Cu.Ft. _____

H. % Water Vapor in Sampled Gas, 100 x F/G _____

* See D on sampling train data sheet

Gas Density Correction Factor

Component	Volume Percent	X Moisture Collection	X Mol.Wt.=	Weight Per Mole Wet Basis
Water	.44	1.0	18.0	7.92
CarbonDioxide	Dry Basis 15.4	.56	44.0	3.79
CarbonMonoxide	Dry Basis <0.2	.56	28.0	0.03
Oxygen	Dry Basis 0.2	.56	32.0	0.04
Nitrogen + Inerts	Dry Basis 84.2	.56	28.2	13.30
			Average Molecular Weight	25.08

J. $\frac{\text{Av.Mol.Wt.}}{28.95}$ = .866 Gas Mol.Wt. Rel.to Air

K. $= \sqrt{\frac{1.00}{J}}$ = 1.07 Gas Density Correction Factor

9/76

KVB 5807-842

KVB

Well 308 B

MOBIL LOST HILLS

Test No. 308 B

Page

Sampling Station Mobil LOST HILLS

Date 8-24-78

Stack ΔP + 0.08 "H_2O GAS VELOCITY DATA Barometer 30.03

0.06 "H_2O

Time Start									
Point	Vel.Head In. H_2O	Temp. °F	Vel. Ft/Sec.	Vel.Head In.H_2O	Temp. °F	Vel. Ft/Sec.	Vel.Head In.H_2O	Temp. °F	Vel. Ft/Sec.
1	.11	178	24.29						
2	.11		24.29						
2	.09		22.0						
3	.09		22.0						
4	.1		23.16						
1	.09		22.0						
2	.11		24.29						
2	.11		24.29						
3	.11		24.29						
4	.11		24.29						
	$(\times\sqrt{.3206})^2$								
Finish	.103	178	23.5						

A. Average Velocity (Traverse) Ft/Sec 23.5

B. Av. Velocity (Ref. Point) Ft/Sec

C. Flue Factor A/B

D. Pitot Correction Factor .835

E. Gas Density Correction Factor 1.07

F. Corrected Vel., AxDxE, Ft/Sec 21.00

or BxCxDxE, Ft/Sec

G. Area of Flue, Sq. Ft. .087

H. Average Flue Temp., °F 178 °F 638 °R

I. ~~Flow Rate, ExGx60~~ CFM 109.6

J. ~~Flow Rate,~~ SCFM 89.3 SCFM

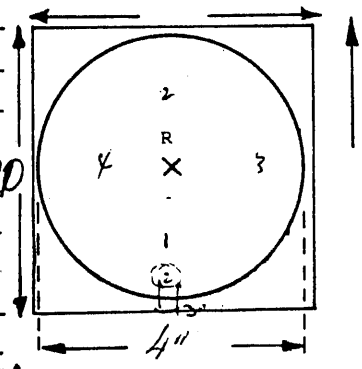

9/78

KVB 5807-842

KVB

Sample Code Well 308 B

Firm and Unit Lost Hills

Test No. 308 B

Page E-

Sampling Station Mobil Well Head

Date 8-24-78

WATER VAPOR AND GAS DENSITY CALCULATIONS

Percent Water Vapor in Gases

A. Gas Pressure at Meter, In. Hg (Absolute) _____

B. Vapor Pressure of Water at Impinger Temp., In.Hg _____

C. Volume of Metered Gas, Cu. Ft. _____

D. Volume of Water Vapor Metered, BxC/A, Cu.Ft. _____

E. Volume of Water Vapor Condensed, Cu.Ft.* _____

F. Total Volume of Water Vapor in Gas Sample, D+E, Cu.Ft. _____

G. Total Volume of Gas Sample, C+E, Cu.Ft. _____

H. % Water Vapor in Sampled Gas, 100 x F/G _____

* See D on sampling train data sheet, page D-1

Gas Density Correction Factor

Component	Volume Percent	X Moisture Collection	X Mol.Wt.=	Weight Per Mole Wet Basis
Water	.44	1.0	18.0	7.92
CarbonDioxide	Dry Basis	16.2 .56	44.0	3.99
CarbonMonoxide	Dry Basis	<0.2 .56	28.0	0.03
Oxygen	Dry Basis	<0.2 .56	32.0	0.04
Nitrogen + Inerts	Dry Basis	83.4 .56	28.2	13.17
			Average Molecular Weight	25.15

J. $= \frac{\text{Av.Mol.Wt.}}{28.95} =$ 0.869 Gas Density Relative to Air

K. $= \sqrt{\frac{1.00}{J}} =$ 1.07 Gas Density Correction Factor

9/76

KVB 5807-842

KVB

Sample Code 344 well + others

Firm and Unit Mobil Lost Hills

Test No. Lost Hills

Page

Date 8-25-78

GRAB SAMPLE SCHEDULES & RESULTS

SAMPLE STATION	Sample Type and Sampling Time	Components	ppm Dry Basis	ppm Stack Conditions	Grains/SCF Stack Conditions	LBS/HR Loss
Location LOST HILLS	~~10:32~~ 10:30 #344	H_2S	Bottle A	250cc	Well 344	
		THC C_1-C_6	Bottle B	500 cc		
8/24/78						
Temp., °F 76	~~11:53~~ 12:15 12:18	H_2S	Bottle 6	250	Well 304R	
		THC	" 18	500		
Humidity, % 58	13:40 13:45 #308B	H_2S	19	250	Well 308B	
		THC	28	500	"	
Location Lost Hills	well 317R 10:29 ~~10:32~~	~~THC C_1-C_6~~	~~Bottle 10~~	~~250 cc~~	~~Well 317R~~	
		~~H_2S~~	~~Bottle 5~~	~~250 cc~~		
8/25/78						
Temp., °F 80	Well T302 11:55 11:58	THC	Bottle 21	500 cc	well 302	
		H_2S	Bottle 13	250 cc	"	
Humidity, % 55						
Location						
Temp., °F						
Humidity, %						

9/76

KVB 5807-842

KVB

Firm Name and Unit MoBil Sample Code 344 - 304R - 308 B

Test No.

Sampling Station MoBil LOST HILLS Page D-2

Date 8-25-79

FIRE FLOOD

SPOT MONITORING DATA BY DRAEGER OR TLV SNIFFER

INSTRUMENT USED	FUNCTIONAL DATA	COMPOUND NAME	CONCENTRATION PPM	Grs/SCF	Lbs/Hour
Well 344	Draeger	H_2S	2500		
	Orsat	CO_2	15%		
		O_2	1%		
	Tyrite	CO_2	14.5%		
	"	~~HCN~~ O_2	2%		
	Draeger	% SO_2 (1) stroke	1000 ppm	Average of 3	
	"	NO_x	~~0~~	H_2S	1500
	"	CO_2	15%	CO_2	16%
		CO	1000 ppm	CO	2000
		H_2S	7 100 ppm	SO_2	1100
		H_2S (1) stroke	1000 ppm	HCN	75
		NO_2	~~0~~	H_2SO_4	
Well 304 R		SO_2	300		
	10:15	NO_x	~~0~~		
		CO_2 15.4	16%		
		CO	2000		
		~~HCN~~ H_2S	380		
Well 308 B.		SO_2	> 2000		
		CO_2 Orsat 16.2			
		CO	> 3400		
		H_2S	> 2450		
		Orsat O_2 < 0.2			
		CO < 0.2			
		H_2S Tube CH 28101	0.37%		

9/76

KVB 5804-5

$SO_2 + H_2S$ 28201 0.37%

HCN 75 ppm

KVB 5807-842

PARTICULATE EMISSION CALCULATIONS

Test No. 2 Date 8-25-78 Location LOST HILLS, MOBIL Engr. J. Macko N. Brunetz

Unit No. well 302 Fuel FIRE FLOOD Sampling Train and Method Joy, Method 5,

Pitot Factor, Fs .835 Barometric Pressure, P_{bar} 30.12 in. Hg

Tot. Liquid Collected, V_{lc} condensate 183 ml Total Particulate, M condens. Hydrocarbon filter + inorganic H_2O residue m gm

Velocity Head, ΔP 1.58 iwg Stack Temp., Ts 596 °R Stack Area, As 0.049 ft^2

Sample Volume, Vm 40.35 ft^3 Stack Press., Psg + 1.2 iwg Excess O_2, XO_2% < 0.2 %

Orifice Press. Diff., H 1.7 iwg Stack Gas Sp. Gravity, Gs 0.982 n.d.

Sample Time, θ 35 min Nozzle Dia., Dn 0.25 in. Meter Temp., T_m 549 °R

				M filter + H_2O extr. inorg. H_2O soluble organic residue m gm		M filter + H_2O resid. + H_2O soluble organics + condensed organic mists m gm		ORG. CONDENSATE
1. Sample Gas Volume	$Vm_{std} = 0.0334\ Vm(P_{bar} + H/13.6)\frac{520°R}{T_{mAv}}$	TSP NO IMPINGERS	38.60	SCF	47.27	38.60	SCF	38.60 SCF
2. Water Vapor	$Vw_{std} = 0.0474\ V_{lc}$		8.67	SCF		8.67	SCF	8.67 SCF
3. Moisture Content	Bwo = Eq. 2/(Eq. 1 + Eq. 2)		0.183	N.D.		0.183	N.D.	0.183 N.D.
4. Concentration a.	C = 0.0154 Mn/Vm_{std}	0.0016	0.005	grains/DSCF			grains/DSCF	2.094 grains
b.	C = 2.205 x 10^{-6} Mn/Vm_{std}	2.3×10^{-7}	7.2×10^{-7}	lb/DSCF			lb/DSCF	3×10^{-4} lb/DSCF
c.	C = Eq. 4b x 16.018 x 10^3		1.15×10^{-2}	grams/DSCM			grams/DSCM	4.80 grams/DSCM
5. Abs. Stack Press.	Ps = P_{bar} x 13.6 + Psg		411	in. w abs.		411	in. w abs.	411 in. w abs.
6. Stack Gas Speed	$Vs = 174\ Fs \sqrt{\Delta PTs}\sqrt{\frac{407}{Ps} \times \frac{1.00}{Gs}}$		4503	ft/min		4503	ft/min	4503 ft/min
7. Stack Gas Flow Rate @ 70°F a.	Qsw = Eq. 6 x As x $\frac{530}{Ts}$ x $\frac{Ps}{407}$		214	WSCF/min		214	WSCF/min	214 WSCF/min
b.	Qsd = Eq. 7a x (1. - Eq. 3)		175	DSCF/min		175	DSCF/min	175 DSCF/min
8. Material Flow	Ms = Eq. 7b x Eq. 4b x 60	2.5×10^{-3}	8×10^{-3}	lb/hr			lb/hr	3.15 lb/hr
9. XO_2 factor	$XO_2f = 2090/(20.9 - XO_2\%)$		—	N.D.		—	N.D.	— N.D.
10. Emission a.	E = Eq. 4b x Fe x Eq. 9		—	lb/MMBtu		—	lb/MMBtu	— lb/MMBtu
b.	E = Eq. 4c x Fm x Eq. 9 x 1000		—	ng/joule		—	ng/joule	— ng/joule
11. % Isokinetic	$I = \frac{14077 \times Ts(Vm_{std} + Vw_{std})}{\theta \times Vs \times Ps \times Dn^2}$ = 98%	47.27 / 40.35 / 4503 / 411 / 0.0625	98%	%		98%	%	98% %

	Oil	Gas	Coal
Fe SC Feet/10^4 Btu	92.2	87.4	98.2
Fm SC Meters/10^4 joules	0.002475	0.002346	0.002636

*Multiply Vm_{std} by 530/T_m(°R) if meter not temp. compensated.

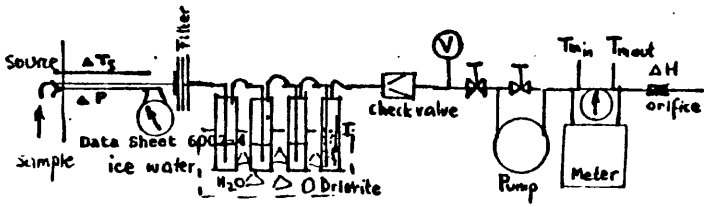

158

KVB 5807-842

LOCATION Mobil Lost Hills
UNIT West Kern 302 FUEL
OPERATORS FIRE FLOOD

TEST NUMBER	302 Well
DATE	8-25-78
AMBIENT TEMPERATURE, °F	82 RH 51
METER VOL. (START/END)	8451.30 / 8491.65

Page 1 Of

Fuel Analysis (% By Weight)

C = H = S = O =
N = CO_2 = H_2O =
ASH = INERT =
DENSITY = HHV =

Nomograph Setup

P_{meter} = C =
P_{stack} = T_{stack} =
T_{meter} = ΔP =
$\Delta H_@$ = Noz (Ideal) =
% H_2O = 25 Noz (Actual) = 1/4"

Imp.	Vol. (End)		Vol. (Start)		ΔVol. (ml)
#1	230	−	100	=	130
#2	145	−	100	=	45
#3	6	−	0	=	6
			Total		181
#4 (Silica Gel)	g (End) 811.1	−	g (Start) 799.9	=	Δ grams 1.2
			Total Vol. H_2O		193 ml 10ml oil . 183

Filter#
Particulate Wts
Filter ____ mg
Acetone ____ mg
Total ____ mg

Sampling Time Per Point, Min.	Particulate Wt., mg	Condensate Vol., ml	Fuel Flow gal/hr	Load MW	C_{pitot}	Stack Press. In.Hg-Gauge	Barometric Pressure
					.835	1.2 "H_2O	30.12

TEST RESULTS

Test Averages:
ΔP_s = 1.58 T_{stack} = 136 °F
ΔH = 1.7 T_{meter} = 84 °F
Sample Vol. = 40.35 ft^3

Sample Point	Time	METER CONDITIONS ΔP_s	ΔH	Meter Reading	TEMPERATURES, °F Stack	Probe	Oven	Impingers In	Impingers Out	Meter	O_2, %	Vac.
	1135	1.58	1.6	8451.30	136	heated	340	235	52	82/75		3.5
	7.0	1.58	1.6	8459.05	136	300+	330	250	55	85/80		3.5
	14.0	1.58	1.7	8467.07	136	°F	320	245	60	90/80		3.5
	21.0	1.58	1.8	8475.3	136		340	210	55	97/85		4.0
	28.0	1.58	1.8	8483.57	136		350	235	52	100/90		4.5
	35.0	1.58	1.7	8491.65	136		360	245	55	105/94		4.5
End	12:07											
										89		
		stop	leak	34.88 sec								
Average												

Percent O_2 = ____
$MW_{stack\ gas}$ = ____ (28)
Velocity = ____ ft/sec
Total Sample Time = 35 min.
ISOKINETICS = ____ %

Particulate Emissions

____ lbs/10^6 BTU

COMMENTS:
leak .025

159

KVB 5807-842

KVB

~~Sample Code~~ Vent: Well 302

Lost Hills, MOBIL OIL

Test No. 302 Well

Page

Sampling Station Fire Flood

Date 8-25-78

Static Pres 1.2" H_2O

Barometric 30.12"

GAS VELOCITY DATA

Time	Static 1.2" H_2O								
Start 10:50									
Point	Vel.Head In. H_2O	Temp. °F	Vel. Ft/Sec.	Vel.Head In.H_2O	Temp. °F	Vel. Ft/Sec.	Vel.Head In.H_2O	Temp. °F	Vel. Ft/Sec.
1	1.50	136							
2	1.70								
R	1.60								
3	1.40								
4	1.70								
1	1.50								
2	1.70								
R	1.60								
3	1.50	136							
4	1.70								
$\Sigma\sqrt{\ }$	1.258								
Finish	1.58	136	88.99						

A. Average Velocity (Traverse) Ft/Sec 88.99

B. Av. Velocity (Ref. Point) Ft/Sec —

C. Flue Factor A/B —

D. Pitot Correction Factor .835

E. Gas Density Correction Factor assum. ~~.95~~ 1.01

F. Corrected Vel., AxDxE, Ft/Sec (~~77.96~~) 75.05

or BxCxDxE, Ft/Sec

G. Area of Flue, Sq. Ft. 0.049

H. Average Flue Temp., °F 136°F 596°R

I. Flow ~~Rate~~ ~~FxGx60~~ CFM ~~229~~ 221

J. Flow Rate 520 x J/H+460 SCFM 214

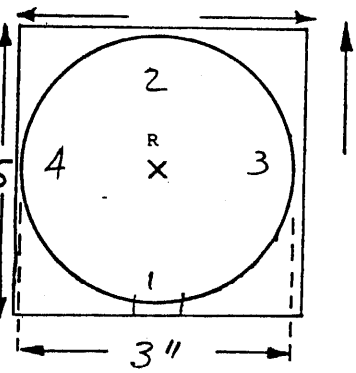

9/79

308,252 scf/Day

KVB 5807-842

KVB

Sample Code 302 Well Vent

Firm and Unit Mobil Lost Hills

Test No. 302 Vent

Page

Sampling Station Fire Flood Vent

Date 8-25-78

WATER VAPOR AND GAS DENSITY CALCULATIONS

Percent Water Vapor in Gases

A. Gas Pressure at Meter, In. Hg (Absolute)

B. Vapor Pressure of Water at Impinger Temp., In.Hg

C. Volume of Metered Gas, Cu. Ft.

D. Volume of Water Vapor Metered, BxC/A, Cu.Ft.

E. Volume of Water Vapor Condensed, Cu.Ft.*

F. Total Volume of Water Vapor in Gas Sample, D+E, Cu.Ft.

G. Total Volume of Gas Sample, C+E, Cu.Ft.

H. % Water Vapor in Sampled Gas, 100 x F/G

* See D on sampling train data sheet

Gas Density Correction Factor

Component	Volume Percent	X Moisture Collection	X Mol.Wt.=	Weight Per Mole Wet Basis
	11.35			
Water	18.4	1.0	18.0	3.31
CarbonDioxide	Dry Basis 16.4	.816	44.0	5.89
CarbonMonoxide	Dry Basis —		28.0	—
Oxygen	Dry Basis 4.2	.816	32.0	0.05
Nitrogen + Inerts	Dry Basis 83.4	.816	28.2	19.19
			Average Molecular Weight	28.44

J. Density of Gas Referred to Air = $\frac{\text{Av.Mol.Wt.}}{28.95}$ = 0.982

K. Gas Density Correction Factor = $\sqrt{\frac{1.00}{J}}$ = 1.01

9/76

KVB 5807-842

KVB

Sample Code Well T 317 R

Firm MOBIL West Hills

Test No. 317 R

Page

Sampling Station Well Vent. MOBIL OIL

Date 8/25/78

WATER VAPOR AND GAS DENSITY CALCULATIONS

Percent Water Vapor in Gases

NO FLOW MEASURABLE

A. Gas Pressure at Meter, In. Hg (Absolute) can not be sampled for

B. Vapor Pressure of Water at Impinger Temp., In. Hg particulates.

C. Volume of Metered Gas, Cu. Ft.

D. Volume of Water Vapor Metered, BxC/A, Cu.Ft.

E. Volume of Water Vapor Condensed, Cu.Ft.*

F. Total Volume of Water Vapor in Gas Sample, D+E, Cu.Ft.

G. Total Volume of Gas Sample, C+E, Cu.Ft.

H. % Water Vapor in Sampled Gas, 100 x F/G

* See D on sampling train data sheet

total Flow 6MCFD - 27 MCFD

Gas Density Correction Factor

Time 9:50

Component	Volume Percent	X Moisture Collection	X Mol.Wt.=	Weight Per Mole Wet Basis
Water	5%	1.0	18.0	
CarbonDioxide	Dry Basis 20%		44.0	
CarbonMonoxide	Dry Basis ~~4.0~~		28.0	
Oxygen	Dry Basis 4.6%		32.0	
Nitrogen + Inerts	Dry Basis 65.9		28.2	
$SO_2 + H_2S$	.5			
H Carbon	4%	Meth. + Non Methane		
			Average Molecular Weight	

J. Density ~~of Gas~~ Referred to Air = $\frac{\text{Av.Mol.Wt.}}{28.95}$ =

K. Gas Density Correction Factor = $\sqrt{\frac{1.00}{J}}$ =

9/76

KVB 5807-842

KVB

Sample Code 2

Firm Name and Unit MOBIL, LOST HILLS

Test No. 2

Page D-2

Sampling Station Fire Flood Vents

Date 8-25-78

SPOT MONITORING DATA BY DRAEGER OR TLV SNIFFER

	INSTRUMENT USED	FUNCTIONAL DATA	COMPOUND NAME	CONCENTRATION ppm	Grs/SCF	Lbs/Hour
well	317R No flow	Draeger	H_2S-SO_2 CH2820/	.46%		
			H_2S CH2810/	.69%		
			H_2S 27187	>2000		
		Background		< 1 ppm		
No	Flow on well		HCN	>150 ppm		
(not measurable	by pitot tube)		NOx	0		
			CO_2	20%		
		confirmed	CO 9 ~	500		
		CRSAT	CO_2	20%		
			O_2	.4-.6%		
		Draeger	H_2O >	14 mg/liter		
well	302	Draeger	H_2S-SO_2 CH2820/	< .15%		
			H_2S CH2810/	.15%		
			HCN	1 PPM		
			CO_2	16.5%		
			H_2S 29101	600 PPM		
			CO	100 PPM		
			H_2S-SO_2 <	.15%		
			NOx	0		
		Squibe	SO_2 31701	> 25 ppm		

9/76

KVB 5807-842

APPENDIX G

CALIBRATION DATA SHEET - MODEL 400

CALIBRATION DATA SHEET - MODEL 400 Appendix G. Gruner

Instrument Identification:

1. Serial No: 4659 Model No: 400 Du Pont Sales Order No: U1205
2. Customer: KVB Inc Customer Order No: 3757
3. Application: Range 'A': 0-500 PPM SO_2 @ 121°C & 1 Atm
   Range 'B': 0-5000 PPM SO_2 @ 121°C & 1 Atm

Replacement Parts:

4. Light Source: A4/UV Part No: 400634-001 Lamp Thermostat Set: N/A °C
5. Beamsplitter: 90 %T Part No: 400344 Phototube Part No: 400588-002
6. Measuring Wavelength: 280 nm(M); Reference Wavelength: 365 (R)
7. Optical Filter Part Nos:

Light Path:	Transmitted (M)	Reflected (R)	Common
	400835	400302	
	400780-901	400303	

8. Sample Cell: 400654-902 Material: SST Path Length: 50.8 cm
   Test Pressure: 4.45 Bars Temp: 121°C Limit: 200 °C Window: 257801 Gasket: 400582
9. Control Station: 400005 Output Resistors: R11: 5K Ω R25: 16.2K Ω
10. Range Change: Auto: N/A Manual: 10:1 Resistors: R27: 4530 Ω R32: 549 Ω

Calibration Data:

11. Meter Readings. Set coarse zero at 1000, fine zero at 500. On-stream readings may va slightly. To ensure maximum accuracy, check analyzer calibration on stream. Refer to Photometric Analyzer Instruction Manual for calibration and troubleshooting procedure.

    B+: 46.0 Chan M Light: 8.5 Chan M Dark: 25.0 Δ Light Chan M: 16.5

    Bias: 44.0 Chan R Light: 2.5 Chan R Dark: 17.0 Δ Light Chan R: 14.5

12. Coarse Zero: 540 Fine Zero: 546 Span: 143 1 ABS Span: 238
13. Output Signal: 4-20 MA D.C. Equivalent to: 0-.17 ABS on Range 'A'

1. Calibration filter Part No: 400337-000 Δ Absorbance: .533

   Equivalent to: 1570 PPM SO_2 @ 121°C & 1 Atm (31.4 % F.S. Range 'B'

NOTE: See back for additional information.

KVB 5807-842

FACTORY CHECKLIST

A. Control Station - bench check

1. Design 400005
2. Rough Timing PWH
3. Fuse 2 AMP PWH
4. Labels PWH
5. Sketch and truth table 400005

B. Control Station - operational check

1. Proper timing and switch function PWH
2. Output signal: zero and span 4-20 MADC track and hold N/A
3. Linearity and stability PWH auto zero PWH
4. Modifications - list: None
5. Wiring diagram

C. Field Unit - operational check

1. Optical components photometer PWH
2. Cell type and pathlength 20" PWH
3. Valve sequencing N/A
4. Oven or cell housing temp. 121°C PWH
5. Sample line temp. controllers N/A
6. Aspirator vacuum N/A
7. Air pressure regulators N/A
8. Leak Check PWH

D. Notes and Comments:

E. Summary: This analyzer meets or exceeds Du Pont Specifications and has been fabricated according to the manufacturing test sheet.

Produced by: P. W. Horner Date: 1/26/78

Checked by: J. A. Sukenna Date: 1/26/78

Supervisor: J. W. Graham Date: 1/26/78

KVB 5807-842

INSTRUMENTATION QC ON HORIBA MODEL PIR-2000 CO_2 MONITOR

Characteristics of Infrared Gas Analyzer

1. Application

Code

Model	PIR-2000	Serial No.	45738096
Component of Sample	CO_2 in N_2	Date	Apr . 29 . 1977
Scale	Range 3 25 % ppm Range 2 % ppm	Cell Length	10 mm

Interference Gas	Mol.	Response Equiv.	Interference Gas	Mol.	Response Equiv.
CO	% ppm	ppm	H_2O	%(℃sat)	ppm
CO_2	% ppm	ppm			
C_3H_8	% ppm	ppm			
NO	% ppm	ppm			

2. Calibration Curve

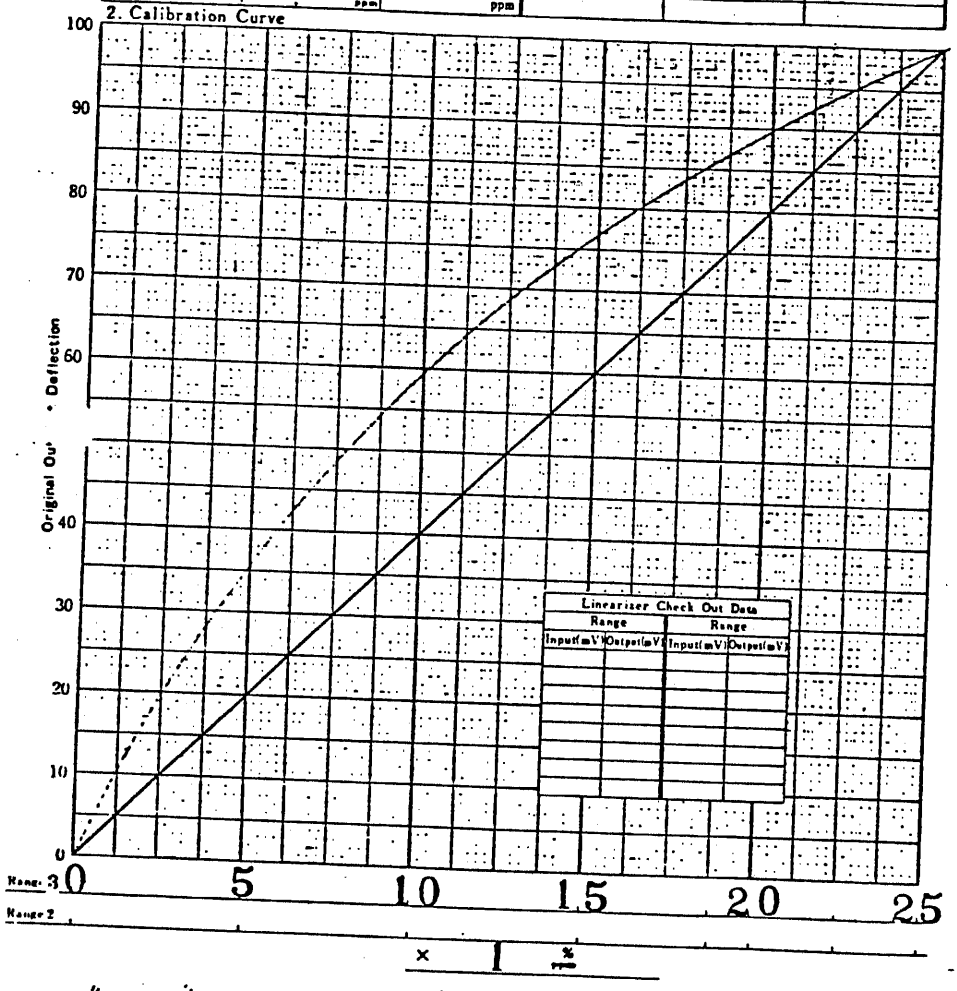

Tested by

Approved by

Inspection Dept. HORIBA, Ltd. KYOTO JAPAN

Characteristics of Infrared Gas Analyzer

Application

Code

Model	PIR-2000	Serial No.	45738096
Component of Sample	CO_2 in N_2	Date	Apr . 29 . 1977
Scale	Range 1 5 % ppm	Range 2 15 % ppm	Cell Length 10 mm

Interference Gas	Mol.	Response Equiv.	Interference Gas	Mol.	Response Equiv.
CO	6.6 %	20 ppm	H_2O	29 %(24 ℃sat)	20 ppm
CO_2	% ppm	ppm			
C_3H_8	6200 ppm	20 ppm			
NO	% ppm	ppm			

2. Calibration Curve

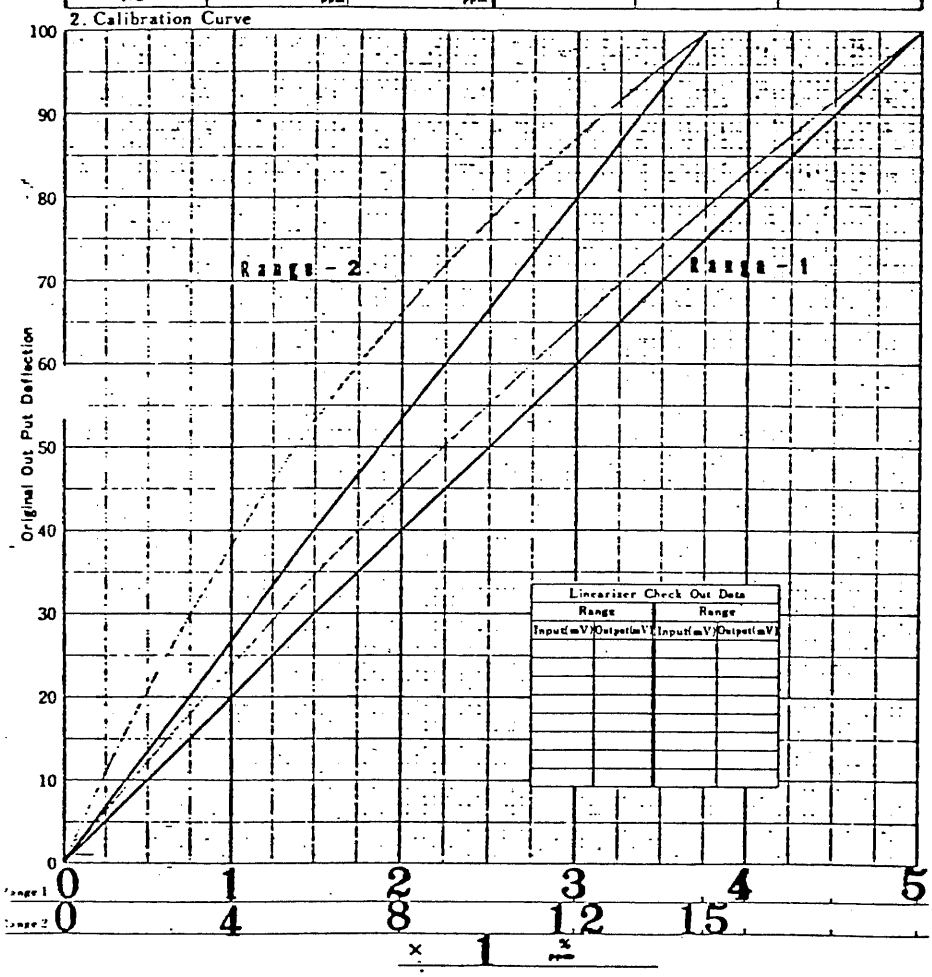

Linearizer Check Out Data			
Range		Range	
Input(mV)	Output(mV)	Input(mV)	Output(mV)

Tester Kyamashita Approved by Y. Kanda (/)

Inspection Dept. HORIBA, Ltd. KYOTO JAPAN

CAL-Ih-A

KVB 5807-842

TEST REPORT

MFG No. 708064

TAG No.

1. SPECIFICATION

Model	PIR-2000 NH_3 Gas Analyzer			
Scale (Range)	1. 0~0.2 %/~~ppm~~	2. 0~0.5 %/~~ppm~~	3. 0~1.0 %/~~ppm~~	
Power Source	A.C 115 V 60 Hz	Output	D.C 0 – 1 V/~~mA~~	
Accessories	1 Set			

2. TESTING RESULT

1) Appearance Dimension Constructon ..... Good
2) Reproducibilitiy Test (Less than ±1.0F.S.%) ..... Good
3) Calibration Test (Less than ±1.0F.S.%) ..... Good
4) Interference of Coexisting Gas Test (at Range 1) ..... Good

Interference Gas	Volume	Interfered Value
H_2O	18 °C Sat.	45 ppm
CO	6.6 %/~~ppm~~	14 ppm
CO_2	14.32 %/~~ppm~~	45 ppm
C_3H_8	6200 ~~%~~/ppm	95 ppm
	% ppm	ppm
	% ppm	ppm
	% ppm	ppm

5) Zero and Span Drift (Less than ±1.0F.S.%/24 Hrs) ..... Good
6) Response Time (at 90% Indication) ..... Good
(Less than(3.0) sec. at(2) ℓ/MIN)
7) Stability Test for Line Voltage Variation ..... Good
(Less than ±1.0F.S.%/115V ±10%)
8) Fluctuation of Sample Flow Rate ..... Good
(Less than ±1.0F.S.%/0.5– 2 ℓ/min)
9) Line Insuration (More than 5MΩ/D.C. 1000V Megger) ..... Good

3. REMARKS

Date of Test

Jan . 30 .1978

Room Temp 18 °C

Inspector G. Kaneda

HORIBA, Ltd. Inspection Dept.

1977.12. 2×50×5 (16781)

KVB 5807-842

INSTRUMENTATION QC ON HORIBA MODEL PIR-2000 CO MONITOR

HORIBA INSTRUMENTS INCORPORATED

1021 DURYEA AVE.
IRVINE INDUSTRIAL COMPLEX
IRVINE, CALIF. 92714

Model No. PIR 2000	Customer KVB ENGINEERING
Serial No. 45534031	Sales Order No. 15786.1
Cell Length 200 mm	P.O. No. 12717
Range 3	Date 8-26-77

TEST RESULTS

INTERFERENCE	
Gas	Response Equivalent

REPEATABILITY <0.5% OF FULL SCALE

90% RESPONSE IN <1 SECONDS

DRIFT

Span: <0.5% Full Scale In Eight Hours

Zero: <1 %

0-1500 PPM CO CALIBRATION CURVE

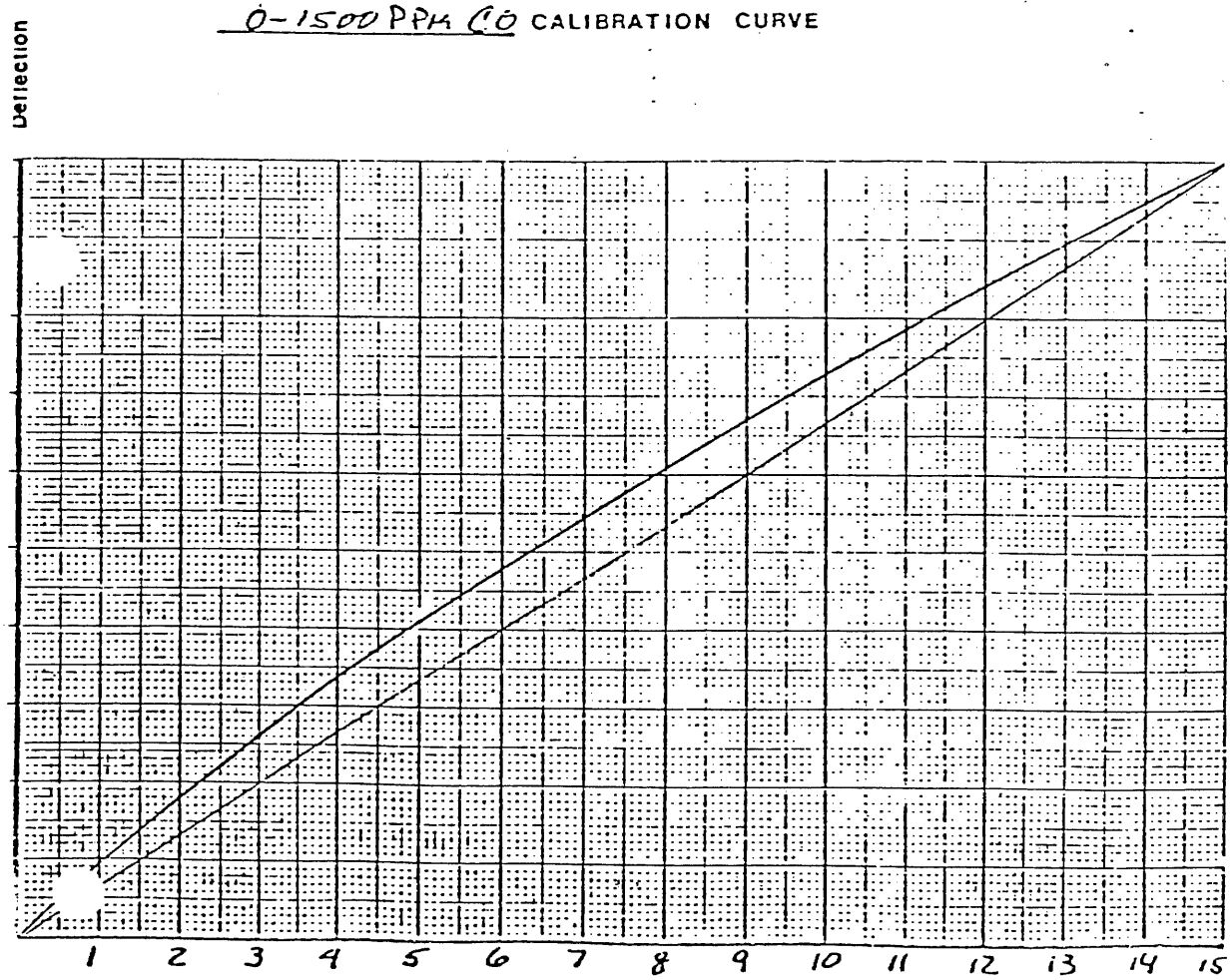

x 100 ppm CO Subdivisions 10%

KVB 5807-842

CALIBRATION CURVE

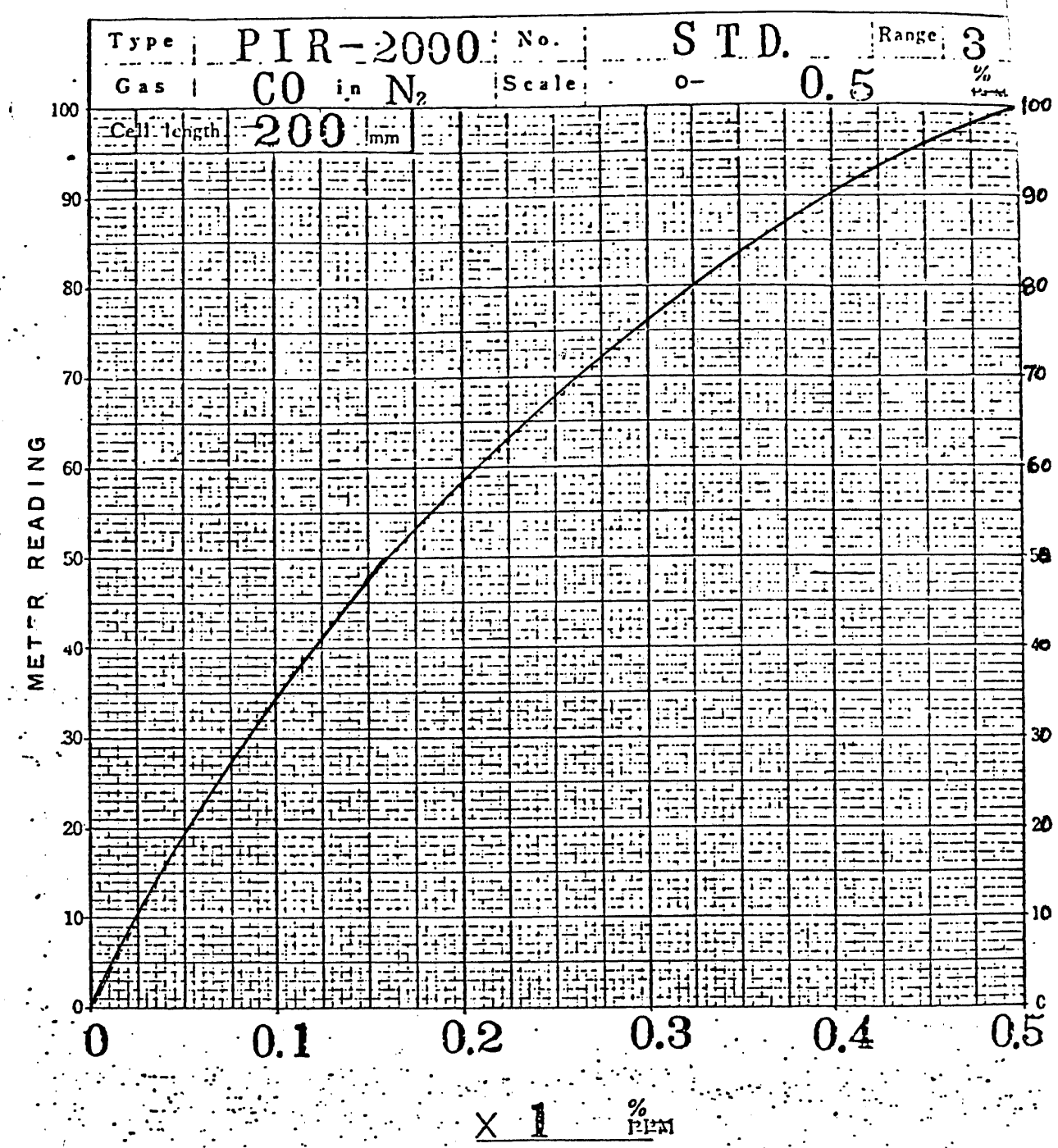

HORIBA Ltd. KYOTO

KVB 5807-842

APPENDIX H

TENNECO THERMOTICS STEAM GENERATOR INFORMATION

Tenneco Oil
A Tenneco Company

P. O. Box 9909
Bakersfield, California 93309
(805) 832-9010

September 15, 1978

KBV, Inc.
17332 Irvine Blvd.
Tustin, CA 92680

Attention: Mr. Frank D. Ducey

RE: Flue Gas Emission Tests on Kendon Steam Generator #43 Located near Taft, CA on Sec. 35, T32S/R23E, MDB&M

Gentlemen:

The information that you requested is attached. Figure 1 shows the steam drive project for the Kendon Lease. The steam generator data and reservoir characteristics are also listed on pages 3 and 4, respectively.

Sincerely,

H. W. Swan
Environmental Safety Coordinator

HWS/LKB:bme
Attachments

KVB 5807-842

NAME: Thermotics Steam Generator

DATE: July 27, 1978

LOCATION: California, Kendon Lease Steam Generator #43

OPERATING COMPANY: Tenneco Oil Company

STEAM GENERATOR DATA

Equipment Specs. - Boiler

Manufacturer: Thermotics, Inc.
Installation Date: January, 1977
Firebox Rated Duty (MMBTU/Hr): 50
Radiation Heating Surface (Sq. Ft): 1990
Economizer (Convection Section) Heating Surface (Sq. Ft): 5884
Total Heating Space of Boiler (Water Walls) (Sq. Ft): 7874
Convection Section Size (Physical Dimensions): L = 11' - 3 13/16", W = 6'-6 3/4", H = 9'-8 1/4"

Equipment Specs. - Burner

Manufacturer: North American
Installation Date: January, 1977
Number of Burners: One
Type of Burner: 5131G-CR-62.5 (Crude Fuel Only)
Total Burner Rated Duty (MMBTU/Hr) = 62.5 (Max.), 50 (Normal Operation)

Maintenance Data

Method of Cleaning Burners: Nozzle cleaned with a solvent (more cleaning required during winter months)
Method of Cleaning Convection Section: High pressure water hose
Time Period between Burner Cleanings: As needed.
Time Period between Convection Section Cleanings: Approximately 3 months
Date of Last Convection Section Cleaning: July 11, 1978

Additional Note:

A stack was added to steam generator for testing procedures. This stack is not part of generator under normal operations.

KVB 5807-842

RESERVOIR CHARACTERISTICS (KENDON)

DATE: July 27, 1978

Zone of Four Northern Injection Wells: Upper Monarch (1050'-1150')
Zone of One Southern Injection Well: Intermediate (1300'-1500')
Average Crude Oil Production Rate:

Average BOPD (Kendon Lease): 620
Average BOPD (8 Northern Steam Drive Wells): 125
Average BOPD (7 Southern Steam Drive Wells): 185

Crude API Gravity: 11°
Steam Drive: See Attached Figure 1
Porosity of Formation (Monarch): 30%
Permeability of Formation (Monarch): 3000 MD (Approx.)
Steam Flow Rate: 75 GPM (Water Intake into Generator)

Average MCF/D, Steam Rate:

Well C-2: 141,000
Well C-4: 147,000
Well D-2: 157,000
Well D-4: 156,000
Well J-3: 1,237,000

KVB 5807-842

THERMOTICS, INC.

EQUIPMENT:	MODEL SG-50-NOS-15
FUEL:	CRUDE OIL
DESIGN THERMAL CAPACITY:	50,000,000 BTU/HR
DESIGN STEAM PRESSURE:	1500 PSIG
DESIGN STEAM QUALITY:	80%
DESIGN CODE:	ASME POWER BOILER SECTION I

Thermal Design

	INLET	OUTLET
. Type of Fluid Handled	Water	Steam & Water
. Total Fluid Handled		
Liquid	49,000	9,800 LB/HR
Vapor	-0-	39,200 LB/HR
. Volume Handled		
Liquid	780	418 CU.FT/HR
Vapor	-0-	14,180 CU.FT/HR
. Fluid Temperature	65	596° F
. Fluid Enthalpy	33	1056 BTU/LB
. Fluid Pressure	1657	1500 PSIG
7. Fluid Velocity	4.73	88.4 FT/SEC
8. Maximum Pressure Drop:	200 PSI at 1500 PSIG Operating Pressure	
9. Stack Gas Temperature:	400 at 20% Excess Air	
0. Design Thermal Efficiency:	85% Based on H.H.V.	
1. Burner Heat Release:	58,820,000 BTU/HR on Higher Heating Valve	
2. Fuel Oil Consumption:	385 GPH	
3. Radiant Heat Flux BTU's/FT^2/HR:	14,850 Avg. 22,000 Max.	
4. Effective Radiant Surface:	2100 FT^2	
5. Convective Heat BTU's/FT^2/HR:	3430 Avg.	
Effective Convective Surface:	5460 FT^2 Approx.	
7. Maximum Tube Wall Temperature:	675° F	

KVB 5807-842

THERMOTICS, INC.

Mechanical Design

		RADIANT SECTION	CONVECTIVE SECTION
8.	Design Pressure	1700 PSI	1900 PSI
9.	Design Temperature	700	700° F
0.	Corrosion Allowance	-0-	-0-
1.	Tube Material	ASTM A-53-GR.B	ASTM A-53-GR.B
2.	Fitting Material	ASTM A-234-WPB	ASTM A-234-WPB
3.	Tube Size	3.500" O.D.	3.500" O.D.
4.	Tube Wall Thickness	0.300"	0.300"
5.	Hydrostatic Test Pressure	2550	2850 PSIG
6.	Feedwater Piping Design Pressure:	1925 PSIG at 600° F	
7	Maximum Outside Casing Surface Temperature:	180° F	
28.	Type Insulation:	Castable & Block	
29.	Type Refractory:	Castable-Alumina Binder	
30.	Type Feedwater Pump:	Positive Displacement Plunger	
31.	Pump Relief Valve Setting:	1300 PSIG	
32.	Steam Safety Valve Settings:	1150 & 1180 PSIG	
33.	Approximate Heat Release:	22,000 BTU's/CU.FT.	
34.	Approximate Shipping Weight:	155,000 LBS	

KVB 5807-842

Thermotics, Inc.

DESIGNERS • ENGINEERS • MANUFACTURERS

O. BOX 13030
TEXAS 77019

TELEPHONE NO.
(713) 682-1211

QUOTATION

QUOTATION NUMBER 484

CUSTOMER REFERENCE Verbal

DATE 10/14/74

TERMS Please see attached letter accompanying this quotation.

PREPARED FOR:

Tenneco Oil Company
P. O. Box 1996
Bakersfield, Ca. 93303

Attn: Mr. Robert Douglass

PAGE 1

ITEM	DESCRIPTION	UNIT PRICE
1	ONE THERMOTICS, INC. Model SG-50-NOS-15 Steam Generator Rating Output: 50 MM Btu/Hr as 80% Quality Steam. Fuel: 398 Gal/Hr API 7° -11° Crude Oil (6.2 MM Btu/Bbl, HHV). Water: 49,000 Lbs/Hr Feedwater at 65 °F Ambient Steam Discharge Pressure: 1500 psig Efficiency: 85% (Based on HHV) at 20% Excess Air and 400 °F Stack Pressure Drop: 200 psi Maximum at 1500 psi Operating Pressure General Description The unit is a once-through, single pass, direct fired steam generator consisting of a combustion chamber-radiant section, convective section, burner, complete with all valves and safety equipment required for safe and efficient operation. The unit contains all instrumentation for automatic, full modulating control and manual restart after shutdown. The unit is constructed on a structural steel skid with control panel, piping, tubing and wiring completely assembled and shop tested, ready for field installation.	

Clerical errors subject to correction — All agreements contingent on strikes, accidents, delays of carrier and other delays unavoidable or beyond our control.

KVB 5807-842

ITEM	DESCRIPTION	UNIT PRICE
	Basic Design Features of the Generator are:	
	A. Codes	
	Unit to be designed and fabricated in accordance with the ASME Power Boiler Code, Section 1, and the State of California Industrial Safety Commission Code for Oil Field Heaters.	
	B. Radiant Section and Combustion Chamber	
	The radiant heat transfer section of the generator will be of horizontal, single pass, straight tube design with these tubes transposed around the inner diameter of a refractory-lined cylindrical combustion chamber. Tube location and spacing and the dimensions of the combustion chamber are sized for optimum radiant heat transfer. The top 210° tube hangers will be of the "full circle" chrome-nickel alloy. For materials and design temperatures, see the attached "Mechanical Design" specification sheet.	
	C. Convective Section	
	The convective heat transfer section of the generator is a single pass tube bundle of vertical design with refractory-lined tube sheets and side panels. The side panels to "swing-out" for ease of tube inspection and cleaning if necessary. These panels to be fastened with slotted pins and wedges. The convective tube bundle dimensions and fin arrangements are designed to optimize gas mass flows with minimum gas side pressure drop to obtain high heat transfer coefficients. The three lower or gas inlet side tube rows are bare shock tubes. The upper rows of tubes are extended surface tubes with all fins wrapped and continuously welded in tension.	
	Tubes are arranged in the tube sheets to allow removal of individual convective tubes. Side walls are designed with 1/4" maximum fin clearance to prevent flue gases from bypassing the tube bundle.	
	The convection section tunnel shall be equipped with a 3" drain valve and designed to prevent water and sludge from entering the radiant section during washing periods.	
	A ground level flue gas sampling tube is provided. A ground level stack temperature readout is provided.	
	D. Refractory System	
	Unit to have a refractory-lined combustion chamber with radiant heat tubes transposed around this chamber. The refractory system in this chamber is designed for heavy-crude oil firing and maximum insulation to meet outside casing temperatures of 180 °F or less. This 5-inch lining consists of 3½" of high temperature castable refractory B & W Kaolite 2300 LI gunnited over 1½" of gunnited insulation Thermotics 6-1 mix.	

DESCRIPTION	UNIT PRICE

All refractory areas exposed to high temperature combustion products and direct radiation to be constructed of 3" to 4" of B & W Kaolite 2500 LI cast or blown over 2" of A.P. Green Block insulation.

E. Burner

Unit to be equipped with a North American Model 5131-GCR Flame King heavy-crude oil burner with 50 HP blower. The burner is mounted in the center of the fire wall to eliminate flame impingement on tubes, supports and refractory. All valves and controls are located for easy accessibility. Firing rate is controlled by a pneumatic power unit and is snychronized with feedwater flow rate.

F. Fuel and Atomizing System

The fuel oil system will be complete on each generator and capable of pumping, heating and atomizing the fuel for efficient burner operation. The system will be capable of heating the fuel oil from 180 °F to 300 °F. Major components of the system include:

1. Steam Atomization System

Separator----------Thermotics In-Line 6"
Solenoid Valve----------ASCO
Pressure Reducing Valve-----Cash 100 HP
Condensate Dump Trap--------Yarway 131
Flexible Hose----------Flexweld-FWB31 or equal
Relief Valve----------Consolidated

The steam supply independent of fuel oil heating system.

2. Automatic electric and steam fuel oil preheater and fuel oil train as follows:

Oil Meter----------Rockwell "ER" w/register in bbls. with bypass & isolating valves
Steam Heat Exchanger--------Thermotics
Electric Heat Exchanger-----Lectricoil HM10X-10-10KW or equal
Electric Heat Exchanger-----Lectricoil HM15X-10-15KW or equal
Fuel Oil Temperature
Control Valve----------Sarco 25-T5
Fuel Oil Thermostat----------Lectricoil or equal
Fuel Oil Strainer----------Kraissl or equal
Fuel Oil Pressure----------Barksdale DIT-A150
Fuel Valve----------3/4" General Controls

G. Feedwater System

The generator feedwater system consists of the following major components:

1. Feedwater Plunger Pump

ITEM	DESCRIPTION	UNIT PRICE
	Manufacturer----------FWI (Wheatley) Plunger Size----------2-½" (1280 psig) Model----------HP 125 M Operating Speed----------349 rpm Stroke----------3-1/8" Pump Capacity----------105 gpm at 1280 psig operating pressure Plunger Material----------Ceramic Fluid End----------Forged Steel Drive----------Forged Steel Drive----------V-Belt Motor----------100 HP, ODP. 1200 spm, 460 volt, 3 phase, 60 cycle, G.E., Westinghouse or equal Oil Level Controller--------Ren w/Five Gallon Oil Reservoir Crank Case Hi-Low Oil Level Shutdown Control----Murphy L-129	
	2. Suction and Discharge Pulsation Dampners Manufacturer----------Pulsation Engineering Type----------Bladder	
	3. Relief Valve on Pump Discharge Manifold Manufacturer----------Crosby Model----------JMB Size----------1" Set Pressure----------1300 psig Capacity at 10% Accum.------115.2 gpm	
	4. Controlling By-Pass Valve Manufacturer----------Fisher Model----------667 DA Size----------1" Screwed (3600) Trim----------Stellite	
	5. Flow Meter Orifice Manufacturer----------Daniel Size----------3" x 1500# ASA	
	6. Feedwater Stop Valve Manufacturer----------Edwards Model----------3628 Size----------2" CV----------60	
	7. Feedwater Check Valve Manufacturer----------Edwards Model----------3678 Size----------2"	

QTY	DESCRIPTION	UNIT PRICE

8. Recorder

Manufacturer----------Barton
Model----------242A
Rotation----------7 Day
Drive----------Spring Wound

H. Feedwater Preheater

Generator is equipped with a double pipe feedwater preheat exchanger to raise water temperature to 220 °F in order to prevent dew point corrosion of convective fin surfaces. This exchanger is constructed with guides of inner pipe with outer enclosure designed for full differential thermal expansion and contraction. A cold water side globe-type manual bypass valve is provided in order to adjust feedwater preheat temperature.

I. Pneumatic Controls

The generator is equipped with full modulating firing controls. Flow rate through the unit is controlled by discharge steam pressure. Burner firing rate is in turn controlled by the flow rate through the unit. Both flow rate and firing rate subsystems are provided with bias capability and manual override operation. Major components of the pneumatic control system are:

1. Pressure Flow Controller

Manufacturer----------Fisher
Model----------4160

2. Flow Transmitter

Manufacturer----------Barton
Model----------274A (0-100")

3. Bias Control

Manufacturer----------Moore
Model----------681

J. Electrical Controls

The electrical control system is designed to program and supervise the generator operation during prepurge light-off, normal operation, post-purge and shutdown. The system automatically controls all motor sequences, provides flame safeguard programming and monitors all safety limit devices to provide safety shutdown should an unsafe condition occur. The system includes all safety limit devices and an annunciator to show cause of a safety shutdown. The following safety limits are provided and annunciated:

DESCRIPTION	UNIT PRICE

1. Flame Failure----------Honeywell R4127
*2. High Steam Temperature-------Honeywell R7353A Dialatrol
*3. Low Steam Temperature--------
*4. High Steam Pressure----------Murphy 45PE
*5. Low Steam Pressure----------Murphy 45PE
6. Low Fuel Oil Pressure--------Barksdale DIT-A150
*7. High Tube-Skin Temp.---------Honeywell R7351A Dialatrol
8. High Burner Throat Temp.-----Partlow-LF7-555-KLSP
9. Low Fuel Oil Temp.----------Partlow-ZF7-555-KLSP
10. Low Instrument Air Pressure--Barksdale DIT-A80
11. Low Burner Draft Pressure----Honeywell C645A
*12. High Stack Temperature-------Honeywell R-7351A Dialatrol
*13. Low Feedwater Flow Rate------Murphy 20 EO
14. Low Atomizing Pressure-------Honeywell L404F
15. High Atomizing Pressure------Honeywell L404F
16. Low Pump Oil Pressure--------Murphy L-129

*These shutdown devices have indicating readout with adjustable set point control located on the control panel for ease of checking operation.

The electrical system is housed in two separate NEMA IV compartments. One compartment contains all high voltage equipment such as motor starters, transformers, main circuit breaker and disconnect. This compartment is provided with dead-front protection which shuts off all power when compartment door is opened. The second compartment contains all of the 115 V control circuitry, including all relays, timers, flame safeguard equipment, operational switches, pushbuttons, lamps, etc.

Manufacturers of major electrical control components are:

Motor Starters----------Allen Bradley
Switches, Lamps, etc.----------Allen Bradley
Control Relays----------Allen Bradley
Annunciator Relays----------Potter-Brumfield
Annunciator Lamps----------Allen Bradley Push-to-Test
Timers----------Eagle or ATC
Main Circuit Breaker----------ITE
Disconnect----------ITE
Control Power Transformer--------Heavy Duty
Flame Safeguard----------Honeywell

K. Gauges, Thermometer

The generator is equipped with all necessary pressure gauges, receiver gauges and thermometers to monitor generator operation. All equipment is located in easy ground level reading.

L. Air Compressor

Gardner-Denver Model ACS 15 HP with 120 gallon receiver tank for startup atomization and instrument air supply. Unit complete with hi-low pressure control, relief valve, hooded intake, belt drive, belt guard and drain. Unit to be mounted on rubber pads

ITEM	DESCRIPTION	UNIT PRICE
	to minimize vibration.	
	M. Sampling System	
	The steam discharge piping is equipped with a liquid effluent sampling separator and a Thermotics sample cooler with replaceable coil, model 35102, for checking steam quality by the TDS or chlorides comparison method.	
	N. Safety Valves	
	The generator discharge piping is supplied with two safety valves as required by the ASME Code.	
	Manufacturer----------Crosby Model----------J056-9-STM-C Size----------1½ G, 2½ Flanged Set Pressure----------#1 - 1150 psig #2 - 1180 psig Capacity (90% at 3% Accum.)--------#1 - 27,128 lbs/hr #2 - 27,827 lbs/hr	
	O. Steam Discharge Piping and Valves	
	1. Steam Connection	
	3" x 1500# ASA R.F. Flange	
	2. Discharge Stop Check Valve	
	Manufacturer----------Edwards Model----------3668 Size----------3" Buttweld	
	3. Blowdown Valve	
	Manufacturer----------Edwards Model----------3628 Size----------2" Buttweld	
	4. Back Pressure Valve	
	Manufacturer----------Fisher Model----------657 ED Size----------3" x 1500# Flanged Trim----------#2 Actuator----------Size 50 Pilot----------4160 R w/67 FR Bourdon Tube----------1500 psi C.S.	
	5. Steam Flow Orifice Meter	
	Manufacturer----------Daniel Size----------4" x 1500# ASA	

ITEM	DESCRIPTION	UNIT PRICE
	6. Steam Flow Recorder Manufacturer----------Barton Model----------202A (Differential & Static Pressure) Rotation----------7 Day Drive----------Spring Wound P. Paint Surface preparation and coating of the generator to be accomplished by the following procedure: 1. Sandblast to completely remove all oil, oil paint and primer. 2. Apply one spray coat of primer using Mobilizinc 7 ethyl Silicate Inorganic Zinc Rich to a dry film thickness of 2-3 mils to all steel surfaces, except the radiant section shell. 3. Apply one spray intermediate coat Mobil 89-F-15 Industry Gray Hi Build Epoxy coating to all surfaces not exceeding 150 °F operating temperature, using the mist coat technique, to a dry film thickness of 1½ to 2 mils. 4. Spray coat radiant section shell with two coats of Mobil 37-J-4 heat resisting black. Spray coat convection section and steam lines with one coat of Intercoastal MA-100 heat resistant aluminum. Spray coat inside cab, pump skid and other normal atmospheric temperature surfaces with Mobil 80-A-1 vinyl aluminum. Spray coat skid floors with Mobil 84-J-5 black epoxy. Q. Miscellaneous 1. Oilfield type skids to have large alignment Dowell pins to line up and connect separate skids to each other. 2. Conduit from control panel to burner controls to be run under cab floor. 3. Cab floor under burner area to be 1" x 3/16" steel grating. 4. Fire box draft gage. 5. 24-hour clock. 6. Start-up service. 7. Three sets of instructions and parts manual w/drawings. 8. Burner sight mounted on end of blower case to view diffuser plate. 9. Cab to be equipped with two double overhead 8' long flourescent lights.	

THERMOTICS, INC.

QUOTATION NO. 484 PAGE 9

ITEM	DESCRIPTION	UNIT PRICE
	PRICE OF STEAM GENERATOR, MODEL SG-50-NOS-15, EACH, F.O.B. OUR PLANT, HOUSTON, TEXAS----------	$206,520.00
	ESTIMATED SHIPPING COST----------	6,400.00
	ESTIMATED SHIPPING WEIGHT----------160,000 lbs.	
	PRICE OF STEAM GENERATOR, F.O.B. RAILSIDING, TAFT, OR BAKERSFIELD, CA., EXCLUDING STATE AND LOCAL TAXES----------	$212,920.00
	DELIVERY: Eight to twelve months after receipt of purchase order, based on current shop load and present material suppliers' delivery promises.	

KVB 5807-842

EQUIPMENT----------Model SG-50-NOS-15
----------Crude Oil
DESIGN THERMAL CAPACITY----------50,000,000 Btu/Hr
DESIGN STEAM PRESSURE----------1,500 psig
DESIGN STEAM QUALITY----------80%
DESIGN CODE----------ASME Power Boiler, Section I

THERMAL DESIGN

	Inlet	Outlet
1. Type of Fluid Handled	Water	Steam and Water
2. Total Fluid Handled		
Liquid	49,000	9,800 lb/hr
Vapor	0	39,200 lb/hr
3. Volume Handled		
Liquid	780	418 cu.ft/hr
Vapor	0	14,180 cu.ft/hr
4. Fluid Temperature	65	596 °F
5. Fluid Enthalpy	33	1,056 Btu/Lb
6. Fluid Pressure	1,657	1,500 psig
7. Fluid Velocity	4.73	88.4 ft/sec
8. Maximum Pressure Drop	200 psi at 1500 psig operating pressure	
9. Stack Gas Temperature	400 at 20% Excess Air	
10 Design Thermal Efficiency	85% Based on HHV	
Burner Heat Release	58,820,000 Btu/hr on Higher Heating Value	
12. Fuel Oil Consumption	398 gph	
13. Radiant Heat Flux Btu's/Ft^2/Hr	14,850 avg., 22,000 max.	
14. Effective Radiant Surface	2,100 Ft^2	
15. Convective Heat Btu's/Ft^2/Hr	3,430 avg.	
16. Effective Convective Surface	5,884 Ft^2 approx.	
17. Maximum Tube Wall Temperature	675 °F	

MECHANICAL DESIGN

	Radiant Section	Convective Section
18. Design Pressure	1700 psi	1825 psi
19. Design Temperature	700	700 °F
20. Corrosion Allowance	0	0
21. Tube Material	ASTM A-53-GR.B or equivalent	ASTM A-53-GR.B or equivalent
22. Fitting Material	ASTM A-234-WPB	ASTM A-234-WPB
23. Tube Size	3.500" O.D.	3.500" O.D.
24. Tube Wall Thickness Nominal	0.300"	0.300"
25. Hydrostatic Test Pressure	2,500	2,738 psig
26. Feedwater Piping Design Pressure	1,850 psig at 600 °F	
27. Maximum Outside Casing Surface Temp.	180 °F	
28 Type Insulation	Castable & Block	
Type Refractory	Castable-Alumina Binder	
30. Type Feedwater Pump	Positive Displacement Plunger	
31. Pump Relief Valve Setting	1,300 psig	
32. Steam Safety Valve Settings	1,150 and 1,180 psig	
33. Approximate Heat Release	22,000 Btu's/Cu.Ft.	
34. Approximate Shipping Weight	160,000 lbs.	

KVB 5807-842

CARB LIBRARY
08428