CROP LOSS FROM AIR POLLUTANTS ASSESSMENT PROGRAM

Status Report

to the

California Air Resources Board

Contract No. A733-108

(4/28/88 - 10/27/89)

D. M. Olszyk
Principal Investigator

C. R. Thompson
Co-Principal Investigator

October 1989

Statewide Air Pollution Research Center
University of California
Riverside, California 92521

ARB-89:croploss89

ABSTRACT

The Statewide Air Pollution Research Center (SAPRC) at the University of California, Riverside (UCR) has a continuing mission to investigate the effects of air pollutants on vegetation, especially agricultural crops and forests, and to determine the losses in productivity caused by these pollutants. To further this mission, we have continued the Vegetation Loss Assessment Program using state-of-the-art procedures for evaluating air pollutant damage based on modeling and field observations. This research has provided information to be used by the Air Resources Board in assessing the impacts to vegetation of different ozone standards, and as a planning tool for guiding future research, especially in terms of forest effects from ozone.

The overall project was initiated in early 1985. Phase I in 1985 focussed on establishment of comprehensive computer data bases relevant to air pollutant, dose-response data for important California crop species, a critical review of key plant studies, and sponsorship of a workshop to assess current data and address informational needs. Phase II in 1986 and 1987 focussed on preparation of a detailed crop loss assessment based on 1984 data, "fine tuning" crop loss assessments with local agricultural input, and work to fill information gaps. Phase III began in 1987 and is continuing. It has emphasized the further refinement of crop loss models, interface of crop loss estimates with economic models to estimate economic losses, implementation of a field verification program to assess ozone exposures and associated crop effects at different locations in the state, and development of procedures and models for assessing losses to forests by focussing on key tree species.

Specific tasks for the 1988-89 were as follows: (1) hold a workshop in the San Joaquin Valley to address issues relating to ozone effects on tree fruit and nut crops, (2) evaluate pollutant exposure systems for trees, (3) conduct a field survey of ozone injury to cotton in the San Joaquin Valley, (4) perform a detailed analysis of crop losses in the San Joaquin Valley, (5) revise all databases and carry out a statewide assessment of the effects of ozone on crop productivity in 1986, and (6) prepare and present information on crop and forest losses in California.

The fruit and nut tree workshop was held on November 16, 1988, at the University of California Kearney Agricultural Center. Twenty individuals attended including an industry representative, USDA staff, University of California scientists, California Air Resources Board staff, and county farm advisors. Many useful recommendations regarding future tree fruit and nut crop research were made.

The tree exposure system evaluation considered 51 designs of field chambers, 18 types of open-air field exposure systems, and 10 plans for branch chambers. Ten of these systems were considered in more detail for potential for field studies with trees. Finally, three systems were more critically evaluated and analyzed for cost of construction and operation. The final three systems included a large open-top field chamber, a tubular 'ZAPS' system, and a type of branch chamber.

A total of 48 fields were evaluated as part of the San Joaquin Valley cotton survey. The field survey indicated that many factors other than air pollution were causing injury to cotton during the late summer of 1988. The only definite ozone injury occurred in Kern county, especially southeast of Bakersfield, and possibly in Tulare county.

The San Joaquin Valley crop loss assessment indicated that losses are reduced by over 50% for most crops grown on the west side compared to the east side of the San Joaquin Valley. Statewide losses for 27 crops were determined using crop productivity and ozone concentration data for 1986. Six crops had losses of greater $\geq$ 15% (dry beans, cantaloupes, cotton, honeydew melons, grapes, and watermelons). The data for the three types of melon is tentative as the loss equation was based on data for muskmelon collected in Indiana. Seven other crops had losses $\geq$ 6% (alfalfa hay, alfalfa seed, sweet corn, lemons, oranges, potatoes, and spinach). Eight crops had small losses of 1-3% (field corn, grain sorghum, onion, rice, corn-silage, fresh tomatoes, processing tomatoes, and wheat). Six crops had no losses (barley, broccoli, celery, lettuce, strawberries, and sugar beets).

Future crop loss from ozone projections were made for 1995 and 2010 based on assumptions regarding possible changes in statewide ozone concentrations. Crop yield losses from ozone were estimated to increase by 8 - 14% for 2010 compared to 1986 for most crops due to an increase in NO_x emissions, a precursor for ozone.

Thus, this project continued to provide a comprehensive understanding of the current status of air pollution effects on California vegetation, a needed synthesis of presently dispersed tree and crop response reports in the literature, models of air pollutant vegetation losses specific to the unique California conditions, and an on-line program for field assessment of injury.

TABLE OF CONTENTS

Page

Abstract.....ii

Acknowledgments.....vii

Disclaimer.....viii

List of Tables.....ix

List of Figures.....x

Summary and Conclusions.....xi

Recommendations.....xvi

I. INTRODUCTION.....1

II. METHODS.....9

A. Fruit and Nut Tree Workshop.....9

B. Tree Exposure System Review.....9

C. San Joaquin Valley Survey.....10

D. San Joaquin Valley Assessment.....13

E. 1986 Statewide Assessment.....18

F. Future Loss Projections.....38

III. RESULTS AND DISCUSSION.....40

A. Fruit and Nut Tree Workshop.....40

B. Tree Exposure System Review.....44

C. San Joaquin Valley Survey.....66

D. San Joaquin Valley Assessment.....71

E. 1986 Statewide Assessment.....76

F. Future Loss Projections.....82

G. Data Base Update.....87

H. Project Review and Presentations.....88

I. Needed New Research.....91

IV. REFERENCES.....94

TABLE OF CONTENTS
(continued)

Page

Appendix

A. Agenda for Fruit and Nut Tree Workshop.....A-1

B. List of Reviewed Exposure Systems and References.....B-1

C. List of Cooperators and Sample Information Letters for Cotton Injury Survey.....C-1

D. Updated Assessment for 1986 Using Ambient Ozone Data - Raw Data Sheets.....D-1

E. Agenda for 1988 Crop Loss Workshop.....E-1

F. Abstract of Paper Presented at Air and Waste Management Association Meeting, Anaheim, June 1989.....F-1

ACKNOWLEDGMENTS

The authors wish to thank the following research staff of the Statewide Air Pollution Research Center for their efforts on this project: for technical assistance, Mr. Gerrit Kats, Ms. Minn Poe, Ms. Fran Trepper, and Ms. Joanne Wolf; and for word processing assistance, Ms. Christy LaClaire and Ms. Barbara Crocker. We also would like to thank Dr. Homero Cabrera, Project Manager, and Dr. Tony Van Curen, advisor regarding future ozone concentrations, of the Air Resources Board for their encouragement.

DISCLAIMER

The statements and conclusions in this report are those of the contractor and not necessarily those of the California Air Resources Board. The mention of commercial products, their source or their use in connection with material reported herein is not to be construed as either an actual or implied endorsement of such products.

LIST OF TABLES

Table Number	Title	Page
1	Ratios for Ozone Data collected at Five Points vs. Fresno	17
2	Calculation of Ozone Exposure-Crop Loss Percentages	37
3	Attendees at 1988 Air Pollution and Fruit and Nut Crops Workshop	40
4	Summary of Performance of Ten Types of Experimental Chambers for Studying Effects of Air Pollutants on Vegetation	48
5	Summary of Performance Characteristics for Three Types of Exposure Systems Most Useful for Trees	62
6	Summary of Costs for Three Types of Exposure Systems Most Useful for Trees	64
7	Leaf Injury to Cultivar SJ2 at Different Sites Observed for the San Joaquin Valley Cotton Survey	67
8	Estimated Losses in 1986 to Selected Crops in San Joaquin Valley	72
9	Estimated Crop Yield Losses From Ambient Ozone Across California in 1986	77
10	Estimated Losses for Different Crop Cultivars in 1986	80
11	Estimated Crop Yield Losses in the Central Valley from Ambient Ozone in 1986 and 2010, and Assuming a Rollback to the Air Quality Standard for Ozone of 9 pphm	83
12	Percentage Change in Yield Losses in the Central Valley vs. 1986 with Ozone Concentration Rollback to 9 pphm and Rollup to Estimated 2010 Levels	84
13	Ozone Exposures for Alfalfa in Selected Counties in 1986 and 2010	86
14	List of Meetings and Presentations Giving Information Relative to Vegetation Loss Assessments	89
15	Attendees at 1988 Annual Crop Loss Assessment Workshop	90

LIST OF FIGURES

Figure Number	Title	Page
1	Location of sites rated for injury to SJ2 cotton in the San Joaquin Valley. UCR indicates UC Riverside-sponsored sites. ACB indicates Acala Cotton Board-sponsored sites	12
2	Ozone Air Monitoring Sites and June-August, 7 Hour (0900-1600 PST) Growing Season Averages in the San Joaquin Valley in (A) 1986, and (B) 1983	14
3	Ozone Air Monitoring Sites and June-August, 7 Hour (0900-1600 PSt) Growing Season Averages in the San Joaquin Valley in (A) 1978, and (B) 1977	15
4	Diagram of Large Open-Top Field Chamber Developed for Trees by the USDA at Raleigh, North Carolina	52
5	View of the Gas Source Pipework and Layout of a Single Fumigation Plot	55
6	Branch Exposure Chamber Designed with Dimensions from Koupis et al. (1988)	59
7	Isopleths for Upper Leaf Injury to SJ2 Cotton in the San Joaquin Valley	69
8	Isopleths for Lower Leaf Injury to SJ2 Cotton in the San Joaquin Valley	70
9	Estimated Yield Losses for Alfalfa from Ozone in San Joaquin Valley in 1986	73
10	Estimated Yield Losses for Cotton from Ozone in San Joaquin Valley in 1986	74
11	Estimated Yield Losses for Grapes from Ozone in San Joaquin Valley in 1986	75

SUMMARY AND CONCLUSIONS

California is the most important agricultural state in the country. Over 60 major crops are grown here, with a total valuation of over 10.1 billion dollars in (CDFA, 1987). In addition, California has a wealth of different types of native vegetation including forests, chaparral, and deserts which are major assets in terms of industry, tourism, and water conservation. California also has some of the most severe air pollution conditions in the United States, particularly in the South Coast Air Basin, but also in the Central Valley, Sierra Nevada Mountains and other areas. Historically, there have been several attempts to evaluate the impact on vegetation from California air pollution, ranging from field surveys to sophisticated field, greenhouse, or laboratory experimental studies. Direct impacts on California crops and trees have been shown, but only limited attempts have been made to synthesize the large amount of research information into a form especially useful to state policy makers, agriculturalists, foresters, and the public.

Thus, to provide much needed information concerning integrated assessments of the losses to plants from air pollutants in California, the ARB initiated a Vegetation Loss Assessment Program in January 1985. The primary objective of this program was to evaluate current crop and forest losses from air pollutants in California. Subordinate objectives were to:

(1) Develop data bases on the responses of California vegetation to air pollutants based on current literature.

(2) Review existing models for losses and develop and extend those models for California vegetation.

(3) Identify scientific information gaps in the plant response model that require additional experimental work.

(4) Review existing and develop new procedures for field observation of losses.

(5) Evaluate pilot research on a variety of physiological or biochemical indicators of losses from air pollutants in addition to visible injury symptoms.

(6) Assist personnel of local agencies in recognizing and reporting vegetation damage from air pollutants.

(7) Organize meetings in different regions of California to present information.

(8) Provide estimates of vegetation damage for different regions of California based on field observations, air quality, and loss models.

(9) Prepare reports and manuscripts of loss estimates for use by ARB in regulatory proceedings or other arenas.

These objectives were to be addressed over a three-phase program.

Phase I of the program included establishment of a comprehensive computer literature data base on air pollutant effects to vegetation, a critical review of key studies on air pollution to California crops in the field, and convening of an intensive workshop to address current data and information gaps for a program to address crop losses in California.

Phase II of the program involved implementation of the recommendations from the Crop Loss Workshop. Drs. C. Ray Thompson and D. M. Olszyk, Principal Investigator and Co-Principal Investigator, respectively, were awarded two sequential contracts to carry out the recommendations during the period of July 1985 to April 1988. The research during this period focussed on crop loss modeling and exploratory work (at Riverside) to fill important information gaps for major crops. Phase II in 1986 and 1987 focussed on preparation of a detailed crop loss assessment based on 1984 data, "fine tuning" crop loss assessments with local agricultural input, and work to fill information gaps.

Phase III began in 1987 and is continuing. It has emphasized the further refinement of crop loss models, interface of crop loss estimates with economic models to estimate economic losses, implementation of a field verification program to assess ozone exposures and associated crop effects at different locations in the state, and development of procedures and models for assessing losses to forests by focussing on key tree species.

Objectives for 1988-89

In 1988-89 the program focused on forest tree species as well as on horticultural and agronomic crops. New research thrusts for 1988-89 met the following subobjectives:

(1) To hold a workshop in the San Joaquin Valley to address issues relating to ozone effects on tree fruit and nut crops.

(2) To evaluate pollutant exposure systems for trees.

(3) To conduct a field survey of ozone injury to cotton in the San Joaquin Valley.

(4) To perform a detailed analysis of crop losses in the San Joaquin Valley.

(5) To update all crop loss data bases and to carry out a statewide assessment of the effects of ozone on crop productivity in 1986.

(6) To update literature reviews.

(7) To prepare and present information on crop and forest losses in California.

The fruit and nut tree workshop was held on November 16, 1988, at the University of California Kearney Agricultural Center. Twenty individuals attended including an industry representative, USDA staff, University of California scientists, California Air Resources Board staff, and county farm advisors. Many useful recommendations regarding future tree fruit and nut crop research were made.

The tree exposure system evaluation considered 51 designs of field chambers, 18 types of open-air field exposure systems, and 10 plans for branch chambers. Ten of these systems were considered in more detail for potential for field studies with trees. Finally, three systems were more critically evaluated and analyzed for cost of construction and operation. The final three systems included a large open-top field chamber, a tubular 'ZAPS' system, and a type of branch chamber.

A total of 48 fields were evaluated as part of the San Joaquin Valley cotton survey. The field survey indicated that many factors other than air pollution were causing injury to cotton during the late summer of 1988. The only definite ozone injury occurred in Kern county, especially southeast of Bakersfield, and possibly in Tulare county.

The San Joaquin Valley crop loss assessment indicated that losses are reduced by over 50% for most crops grown on the west side compared to the east side of the San Joaquin Valley. Statewide losses for 27 crops were determined using crop productivity and ozone concentration data for 1986. Six crops had losses of greater $\geq$ 15% (dry beans, cantaloupes, cotton, honeydew melons, grapes, and watermelons). The data for the three

types of melon is tentative as the loss equation was based on data for muskmelon collected in Indiana. Seven other crops had losses $\geq$ 6% (alfalfa hay, alfalfa seed, sweet corn, lemons, oranges, potatoes, and spinach). Eight crops had small losses of 1-3% (field corn, grain sorghum, onion, rice, corn-silage, fresh tomatoes, processing tomatoes, and wheat). Six crops had no losses (barley, broccoli, celery, lettuce, strawberries, and sugar beets).

Future crop loss from ozone projections were made for 1995 and 2010 based on assumptions regarding possible changes in statewide ozone concentrations. Crop yield losses from ozone were estimated to increase by 8 - 14% for 2010 compared to 1986 for most crops due to an increase in NO_x emissions, a precursor for ozone.

Conclusions

1. Fruit Crops. All past and current research has indicated that almonds, apricots, and oriental plums such as "Casselman" are the most ozone sensitive tree fruit and nut species whereas peaches, European plums, and nectarines are more resistant. The current research with oriental plum trees in open-top chambers will provide useful information as to ozone effects on yield. However, future research should also emphasize fruit surface quality ('finish'), post harvest physiology, bud development, fruit set, and modeling of physiological responses of trees exposed to ozone.

2. Tree Exposure Systems. Three different types of systems are most useful for air pollution studies. Large open-top field chambers approximately 4 m wide and 3 m high would be useful for small sapling trees. These chambers modify the environment but their operating characteristics are known and adjustments in degree of response can be made. Much larger chambers exist but would not be feasible for field use on a large scale basis mostly because of cost. A large scale open-air release system for similar sized trees could be constructed for approximately the same cost as a large scale chamber system. The system would have no extra environmental modifications but would have less rigorous control of pollutant exposures. A branch chamber would be the best choice for intensive studies on physiological and growth process effects of ozone on trees. However, their field use has not been tested fully.

3. Field Survey. Ozone injury symptoms are appearing on cotton plants in the areas of the San Joaquin Valley where ozone concentrations would be expected to be highest. General leaf injury from insects, nutrient deficiencies, and water stress were much more prevalent than ozone injury.

4. San Joaquin Valley Assessment. Crop yield losses from ozone were estimated to be much lower (>50%) on the west than the east side of the San Joaquin Valley. Thus, the east and west sides of the valley must be considered separately in all future crop loss assessments.

5. 1986 Assessment. Ozone was estimated to have produced large yield losses (>15%) for six crops including cotton, grapes, dry beans, and three types of melons; moderate losses for seven crops (6-10%); slight losses for eight crops (1-3%); and no losses for six crops (0%). No data were available for approximately 25 crops, primarily tree fruit and nut species.

6. Future Loss Projections. The future projections indicated little extra crop yield loss from ambient ozone in 1995 vs. 1986, primarily because net emissions are expected to increase only a little in the next nine years in the Central Valley. However, by 2010 projected yield losses due to ambient ozone are estimated to be 8-14% higher vs. 1986 for major crops such as alfalfa, cotton and grapes. For a few crops losses would increase substantially, i.e. by 28% for oranges. If pollution emission controls were in place so that all sites would meet the current hourly ozone standard of 9 pphm, than the estimated yield losses in 2010 would be less than the estimated losses in 1986.

7. Information Dissemination. This project continued to be successful in disseminating information on air pollution and vegetation to growers, cooperative extension advisors, university researchers, and governmental regulators. A total of at least nine presentations were made at different meetings. In addition, two peer reviewed and one non-peer reviewed papers were published.

RECOMMENDATIONS

New research initiatives are proposed for 1989-90 as follows:

1. A preliminary assessment should be made of the effects of ozone on California's forests. The focus would be on key species which are most susceptible to ozone. Deliverables would include a computer literature survey of the effects of ozone on trees, an evaluation indicating key studies for quantitative assessments, computer databases with ambient ozone data and tree data relevant to forest assessments, and the preliminary tree loss assessment itself. The assessment would provide important input for the ARB forest response program.

2. A comprehensive survey of ozone injury to important crops across a gradient of ozone concentrations in the San Joaquin Valley should be conducted. The survey will evaluate ozone injury to important crops such as alfalfa, almonds, grapes, beans, and tomatoes as a means of indicating where yield losses are likely to occur. The survey would provide a mapping of injury across the valley and illustrated photographs of injury progression during the growing season.

3. Educational materials should be prepared on air pollution effects on vegetation. Concise descriptions ("Fact-Sheets") on ozone effects on crops would be prepared and made available to the ARB. They would also be distributed to crop grower groups, cooperative extension personal, government officials and others to provide information on the impacts of ozone on agriculture. A portable display would also be created for presentations of the effects of air pollutants on vegetation.

In addition, the project should continue to provide the following vital information:

4. Databases relevant to crop and forest losses from ozone should be updated and an assessment made of crop losses from ambient ozone in 1987.

5. The annual review workshop should again be held to provide input into the ARB vegetation effects research program.

I. INTRODUCTION

Assessment of Losses to California Crops and Forests from Air Pollution

California is the most important agricultural state in the country. Over 60 major crops are grown here, with a total valuation of over 10.1 billion dollars in (CDFA, 1987). In addition, California has a wealth of different types of native vegetation including forests, chaparral, and deserts which are major assets in terms of industry, tourism, and water conservation. California also has some of the most severe air pollution conditions in the United States, particularly in the South Coast Air Basin, but also in the Central Valley, Sierra Nevada Mountains and other areas. Historically, there have been several attempts to evaluate the impact on vegetation from California air pollution, ranging from field surveys to sophisticated field, greenhouse, or laboratory experimental studies. Direct impacts on California crops and trees have been shown, but only limited attempts have been made to synthesize the large amount of research information into a form especially useful to state policy makers, agriculturalists, foresters, and the public.

Crop Losses. Studies in the 1950's and 1960's utilized field surveys to estimate crop losses primarily from ozone, the major component of California pollution, based on subjective estimates by experienced observers or empirical predictions based on injury in the field (Benedict et al., 1979; Millecan, 1971,1976). Calculated losses for California varied widely from 11 to 55 million dollars depending on the year. While providing estimates for a few crops, those assessments were based on generalized assumptions that may not hold for all species and could not consider crop losses not associated with visible injury.

More recent studies have focused on estimates of economic yield losses based on experimental field studies where the pollutant levels can be controlled and/or monitored, and where plant responses could be carefully measured. The California Department of Food and Agriculture's (CDFA) California Crop Loss Assessment (CCLA) project was developed from the original field survey approach. Initial studies involved large scale pollutant gradients with plants grown in standardized media and containers at locations where ambient air pollutant monitoring indicated a gradient in ambient ozone concentrations (McCool et al., 1986; Oshima et al.,

1975,1976). Current CCLA activities continue to emphasize experimental research to generate data for ozone dose-response equations for California crops using closed-top field chambers (McCool et al., 1986).

The National Crop Loss Assessment Network (NCLAN) funded by the U. S. Environmental Protection Agency focused on standardized experimental research using open-top field chambers to generate economic crop loss models. The NCLAN research was conducted at several sites, two sites in California, at Shafter and at Livermore in the San Joaquin Valley, and four in Midwestern and Eastern States. Researchers for NCLAN generated economic loss equations for at least 10 crops, with data for five crops (i.e., alfalfa, cotton, barley, lettuce, and tomato) obtained at the California sites (Heck et al., 1982,1983,1984a,1984b). The NCLAN project was geared to establishing crop loss projections for the entire United States. However, all field research efforts were terminated after the summer of 1986, including those in California.

Neither the CCLA nor the NCLAN projects in California attempted to integrate other published field results into their crop loss models. Furthermore, neither study attempted to validate the crop loss models based on even a limited scale using field surveys of injury symptoms, or by examining ozone levels and area-specific yield data. Recently, researchers evaluated the overall process and assumptions involved with assessing crop losses from air pollutants (Lefohn and Jones, 1986; Heck et al., 1984a; Heuss et al., 1982). For NCLAN, various dose-response functions and economic models were tested to pick the best forms for predicting nationwide crop losses. However, no such effort was made to address assumptions and models most relevant to California until the ARB sponsored assessment program was initiated.

Forest Losses. Ozone has been recognized as affecting trees in southern California since the early 1960's, and in the southern Sierra Nevada mountains since the early 1970's (Miller, 1983; Miller and Millecan, 1971; Miller et al., 1972; McBride et al., 1975). Trees in both of these areas have provided valuable assets in terms of the major species which are extemely important in providing direct tangible benefits such as maintenance of watersheds for water supplies and enhancement of recreation. The trees have also been invaluable in preserving the integrity of ecosystems.

Ponderosa pine (Pinus ponderosa) and Jeffrey pine (P. jeffreyi) are two of the most ozone sensitive tree species in California (Miller and Millecan, 1971). These species have been the focus of intensive field studies in the San Bernardino and Sierra Nevada Mountains (Miller, 1983; Peterson et al., 1987,1988; Pronos and Vogler, 1978). Those studies have documented needle injury symptoms and possible growth reductions in some areas, particularly those areas with the highest ambient ozone concentrations. However, there have been no studies to quantitatively assess losses to these tree species from ozone across the state.

A forest loss assessment would be useful for several reasons. First, it would provide a determination of the types of data bases available to assess losses to important forest species now, without waiting several years until the results from comprehensive state and federal research programs are complete. This would allow for immediate feedback into the current research planning process on a state level, thus allowing for more careful setting of proper goals, objectives, and research tasks for that research. A preliminary assessment also would provide an important synthesis of current research results that could be made easily available for ARB staff, other scientists, and the general public.

Development of the California Vegetation Loss Assessment Program

Thus, to provide much needed information concerning integrated assessments of the losses to plants from air pollutants in California, the ARB initiated a Vegetation Loss Assessment Program in January 1985. The primary objective of this program was to evaluate current crop and forest losses from air pollutants in California. Subordinate objectives were to:

(1) Develop data bases on the responses of California vegetation to air pollutants based on current literature.

(2) Review existing models for losses and develop and extend those models for California vegetation.

(3) Identify scientific information gaps in the plant response model that require additional experimental work.

(4) Review existing and develop new procedures for field observation of losses.

(5) Evaluate pilot research on a variety of physiological or biochemical indicators of losses from air pollutants in addition to visible injury symptoms.

(6) Assist personnel of local agencies in recognizing and reporting vegetation damage from air pollutants.

(7) Organize meetings in different regions of California to present information.

(8) Provide estimates of vegetation damage for different regions of California based on field observations, air quality, and loss models.

(9) Prepare reports and manuscripts of loss estimates for use by ARB in regulatory proceedings or other arenas.

These objectives were to be addressed over a three-phase program. Crops were emphasized for Phase I and Phase II. Phase III also includes assessment of O_3 effects on forests, emphasizing sensitive tree species.

Phase I. Phase I of the program included establishment of a comprehensive computer literature data base on air pollutant effects to vegetation, a critical review of key studies on air pollution to California crops in the field, and convening of an intensive workshop to address current data and information gaps for a program to address crop losses in California. Phase I was funded through contracts to the SAPRC for the period of January 1985 through July 1985 for the research portion of the contract. Drs. C. Ray Thompson and David M. Olszyk were Principal Investigator and Co-Principal Investigator, respectively.

Phase II. Phase II of the program involved implementation of the recommendations from the Crop Loss Workshop. Drs. C. Ray Thompson and D. M. Olszyk, Principal Investigator and Co-Principal Investigator, respectively, were awarded two sequential contracts to carry out the recommendations during the period of July 1985 to April 1988. The research during this period focussed on crop loss modeling and exploratory work (at Riverside) to fill important information gaps for major crops. The loss modeling included the following components: (1) A critical survey was made of published O_3 dose-plant response data for California crops at risk to air pollutants. This survey included data base development and review of statistical procedures used in data analysis. (2) A determination was

made of the locations of crops at risk based on regional and county data for crop production. These data were supplied by Dr. R. G. Howitt, Department of Agricultural Economics, University of California, Davis. (3) A determination was made of air monitoring site locations and averaging time periods (e.g., 12 hours per day, 7 hours per day, hours >10 pphm) for summarization based on data obtained from the ARB Aerometric Data Division. Data from 1984 were used for an initial run of the crop loss model. (4) A determination was made of indexes of crop loss from O_3 for each crop in each region of California. These indices were given to the ARB Research Division for economic analysis. (5) County-by-county assessments of crop loss from O_3 were prepared using 1984 data, including descriptions of the air monitoring and crop assumptions used to generate the assessments. (6) A review of the crop loss assessments was made after preliminary loss estimates were completed and contacts were made with county agricultural commissioner and/or farm advisor offices. (7) Finally, preparation of a revised 1984 assessment was prepared and new 1985 assessment was made based on the county-by-county reviews.

In addition to the modeling work, modified assessments were prepared based on modification of the sensitivity of crops to O_3 by differences in relative humidity in different areas of California. Pilot studies also were conducted for important crops which had no information as to ozone sensitivity. These pilot studies involved acute O_3 exposures for cultivars of almonds, avocados, nectarines, peaches, and squash.

Phase III. Phase III of the program has involved extension of the assessment activities into the field, continuation of the crop loss modeling, and new assessment research relevant to trees. Drs. David M. Olszyk and C. Ray Thompson are the Principal Investigator and Co-Principal Investigator, respectively, for the contract covering this phase, which began in late April 1988 and is described in this report.

A number of key areas are being emphasized in Phase III including: addressing the lack of research information concerning ozone effects on most of California's tree fruit and nut crops, and the need for a field assessment to determine if ozone effects are actually occurring on California crops in the field in the areas predicted from the crop loss models. A third area where information was critically needed regarded the effects of ozone on forest tree species.

For tree fruit and nut crops there has existed a great need for basic information as to the cultivars, physiological characteristics of fruit and nut species important to understand productivity, tree culture, and other aspects of commercial production which would be vital for the assessment of air pollution effects. Thus an intensive workshop was proposed to assess these issues in California by bringing together growers, farm advisors, university researchers, and ARB staff together to exchange information. The results from such a meeting were intended to lead to greater understanding of the potential air pollution problems with these crops both on the part of the industry people and scientists and governmental regulators. The meeting also was proposed to determine the most important considerations regarding future research projects with air pollution and tree fruit and nut crops.

Even though large yield reductions from ozone have been estimated for key crops in the San Joaquin Valley, there has been no recent field verification of effects of ozone to these crops. For example, the 1984 and 1985 loss assessments indicated that cotton yields could be reduced by over 20% due to ambient ozone for some counties in the valley. This magnitude of loss would likely have been accompanied with some degree of foliar injury, especially for a crop such as cotton where injury is related to ozone concentration (Temple et al., 1985). A field study with cotton was proposed for the 1988 San Joaquin Valley and funded separately by the ARB. This study was to include observation of different cultivars at eight sites in the valley maintained as part of the Acala Cotton Board's screening trials. Thus, these eight sites provided an ideal backbone for a more intensive evaluation of injury to many sites across the valley.

As indicated earlier, the effects of ozone on forest trees in California has been a topic of critical concern. The problem could be investigated through field surveys, however, controlled exposures would be necessary in order to relate tree responses to ozone concentrations for the standard setting processes. There are many considerations for forest tree exposures that are different from those for herbaceous crop exposures. Therefore an evaluation of the exposure systems available for trees was necessary to provide information for the design of new exposure studies.

Statement of the Problem

Until the inception of the ARB Crop Loss Assessment Project there had been no recent comprehensive effort to evaluate crop and forest losses from air polluants, especially from ozone in California. This was despite the continuing high levels of ozone and advances in scientific methodology available for assessing plant responses in the field. Neither the United States Environmental Protection Agency's National Crop Loss Assessment Network effort nor the California Deparment of Agriculture's California Crop Loss Assessment Program was geared towards producing comprehensive evaluations of pollutant-induced losses in California. In addition, the federal agency research efforts dealing with air pollutants and forests have not addressed problems specific to California.

Thus, the California Crop (and now also Forest) Loss Assessment Project was initiated in 1985. It has considerably advanced efforts to summarize current knowledge, identify information needs, develop predictive models, evaluate field methods for assessing air pollutant injury, and gain accurate field data relative to vegetation losses from air pollutants in California. New research thrusts were needed in 1988-89 to gain information relative to losses to tree fruit and nut crops, to survey for air pollutant effects in the San Joaquin Valley, and to evaluate air pollutant exposure systems for trees. Continued research was also needed in the areas of preparing computer generated crop loss assessments, updating of air quality data base, and vegetation effects literature collections. Finally, the information prepared needed to be made available to agricultural officials, administrators, growers, and the public.

Objectives

The primary objective of this overall program has been to evaluate current losses to vegetation from air pollutants in California. The program focuses on forest tree species as well as on horticultural and agronomic crops. New research thrusts for 1988-89 addressed the following subobjectives:

(1) To hold a workshop in the San Joaquin Valley to address issues relating to ozone effects on tree fruit and nut crops.

(2) To evaluate pollutant exposure systems for forest or fruit trees.

(3) To conduct a field survey of ozone injury to cotton in the San Joaquin Valley.

(4) To perform a detailed analysis of crop losses in the San Joaquin Valley.

(5) To update all crop loss data bases and to carry out a statewide assessment of the effects of ozone on crop productivity in 1986.

(6) To update literature reviews.

(7) To prepare and present information on crop and forest losses in California.

II. METHODS

A. Fruit and Nut Tree Workshop

For fruit and nut crops, there has existed a great need for basic information as to the cultivars, physiological characteristics of fruit or nut production, tree culture, and other aspects of commercial production that are vital for the assessment of air pollutant effects. Thus, an intensive workshop to assess basic issues of fruit and nut crop production in California and bring farm advisors, University researchers, and ARB staff together to exchange information was needed. It was held on November 16, 1988 at the Kearney Agricultural Center near Parlier.

The meeting was organized with the assistance of Dr. Ted de Jong of the Pomology Department, UC Davis. Dr. de Jong forwarded invitations to the meeting to county cooperative extension personnel responsible for tree fruit and nut crops in the 50+ counties of California. He also invited University of California cooperative extension and research staff responsible for tree crops in California. Dr. de Jong also invited growers with tree fruit and nut crops as well as representatives of the U.S.D.A. working with these crops. Dr. D. Olszyk of UC Riverside invited ARB, UC Riverside and U.S. EPA staff interested in the effects of air pollution on tree crops.

B. Tree Exposure System Review

The focus of the tree exposure system evaluation was to summarize available system designs and to indicate recommended systems for use either with forest tree or agricultural tree species. The first part of the evaluation included a comprehensive review of available systems based primarily on original peer-reviewed journal articles describing individual systems, reviews of exposure system, and reports. The systems were categorized according to three types: (1) field chambers for whole plants, (2) open-air (chamberless) systems for whole plants, and (3) branch chambers. Each system was listed according to location where it was developed. The basic design characteristics were described, i.e. size, type of top, and type of building materials, and key references were cited.

The second part of the evaluation considered of a more detailed tabulation of characteristics for 10 of the most promising systems for tree

studies. The characteristics included control of pollutant exposures, environmental modification, availability of materials, ease of construction, maintenance and durability.

Finally, three systems were evaluated in detail for number needed for similar studies, cost of construction, and other factors. The evaluation considered one system from each of the three main types, i.e. whole plant chamber, open-air, and branch chamber. Figures showing these systems were included.

C. San Joaquin Valley Survey

In terms of actual field assessments, very little is known about potential growth and yield effects from O_3 to crops based on past injury evaluation in the field. Given the large crop area and number of crops in California, an all-encompassing assessment has been impossible. However, in lieu of assessing field effects for all potentially affected crops, a recommendation from the 1987 workshop for the Crop Loss Assessment Project held in Riverside was that field survey efforts focus on one crop which is economically important and which has demonstrated definite responses to O_3 effects based on controlled research.

Cotton was selected for the survey as it is the single most important crop in California, being grown on 990,000 acres and having a value of approximately 766 million dollars in 1986 (CDFA, 1987). Cotton has been shown to be relatively sensitive to O_3, with losses found in field studies both in the San Joaquin Valley and at Riverside. An O_3 concentration-lint yield loss equation has been developed based on the NCLAN research at Shafter (Temple et al., 1985c). This equation had been used in the crop loss assessment project to predict a potential yield loss from O_3 of from 14.3 to 23.2% in the counties where cotton was grown in 1984, with a statewide potential loss of 19.6% (Olszyk et al., 1988a,b; Thompson and Olszyk, 1986). However, it has not been known how actual ambient environmental conditions in the counties affected the loss figure, and the question has been raised whether the loss may at least, in part, be an artifact of the chambers used to conduct the research.

The cotton field survey was carried out between September 1 and 14, 1988, to determine whether visible effects from ozone were actually occurring in commercial fields. A large number of individuals were

contacted in order to identify growers who would assist in the study. The cotton farm advisors from Merced, Madera, Fresno, Tulare, and Kings counties suggested a total of 34 possible cooperators; the Farm Bureaus of these counties suggested three possible cooperators. All possible cooperators were contacted by telephone and/or by letter, with numerous telephone calls necessary in most cases to establish contact and determine precise locations of the fields in question. The Kern County Farm Advisor preferred to take Dr. David Olszyk to the fields in person and not to send names of possible cooperators. Eventually, 35 commercial fields belonging to 16 growers, were identified for observation. We decided to concentrate on growers who did respond and who had multiple fields spread over larger areas.

Sites in different areas were visited at different times in order to follow the progression in maturation from south to north in the San Joaquin Valley, and because the sites were too numerous and far apart to visit on the same dates. Most sites in Kern, eastern Kings, and southern Tulare counties were visited on September 1-2, 1988. Sites in western Kings and central and southern Fresno counties were visited on September 7-8, 1988. Sites in northern Tulare, northern Fresno, Madera, and Merced counties were visited on September 13-14, 1988. The locations of the sites visited are shown in Figure 1. Sites 1-35 were commercial fields; sites 36-39 were rated as part of the ARB-sponsored cotton open-top field chamber study being conducted by UC Riverside (UCR). Sites 40-48 were rated as part of the ARB-sponsored cotton study using plots that were maintained as part of the Acala Cotton Board's (ACB) program with Dr. Richard Bassett of the USDA Cotton Research Station at Shafter.

The cotton plants were rated for general chlorotic and necrotic leaf injury irregardless of cause. Injury was rated separately for the upper and lower halves of plants. Injury was determined in increments of 0, 5, 10, 20, 30, 40, 50, 60, 70, 80, 90, or 100% leaf area injured. The percentages of injury were based on photographs of injury to cotton leaves taken in the fall of 1987, using ambient plants that were part of Dr. Pat Temple's cotton study. Four observations of injury were made at each site along a gradient perpendicular from the nearest road into the field. The locations were approximately five m apart, beginning five m into the field from the edge of the road. Notes were made as to general types of injury in the field (i.e., water stress, insects, nutrient deficiencies), but no

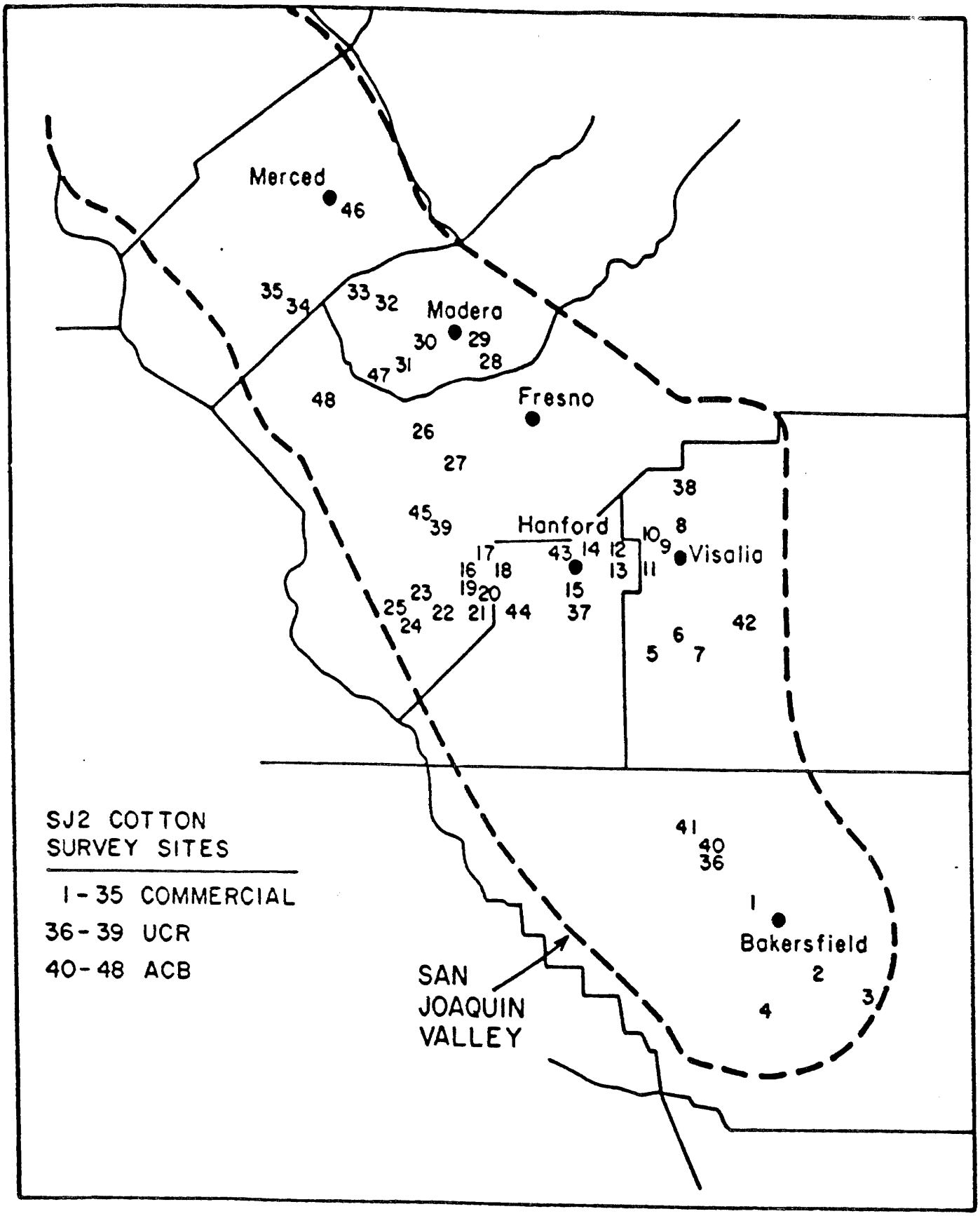

Figure 1. Location of sites rated for injury to SJ2 cotton in the San Joaquin Valley. UCR indicates UC Riverside-sponsored sites. ACB indicates Acala Cotton Board-sponsored sites.

attempt was made to specifically identify the causes of injury. Photos were taken of the typical injury symptoms in each field, as well as the location of the sampled plots in relation to the nearest road.

D. San Joaquin Valley Assessment

The detailed San Joaquin Valley crop loss assessment involved reevaluation of available air monitoring and crop productivity data to more precisely indicate yield losses from ambient ozone in different areas of the valley.

Ozone Data. The first step for the assessment was a review of 1986 ozone data to determine if there was a definite, quantifiable pattern of ozone concentrations which could be incorporated into the crop loss models. As shown in Figure 2A, very little data were collected in the San Joaquin Valley during 1986. There were a few sites in the far north clustered around San Joaquin County, a number clustered around Fresno, one at Visalia, and three clustered in and around Bakersfield. There was no site at Hanford as in most previous years.

Therefore, we decided to evaluate past ozone monitoring data to see if patterns in ozone concentrations were more apparent when more air monitoring sites were in operation. In 1983 there were ozone monitoring sites at Five Points and Coalinga in western Fresno county as well as in the vicinity of Fresno (Figure 2B). The ozone concentration was lower at Five Points at the west side of the valley as expected, and moderate at Hanford toward the middle of the valley. Surprisingly, the ozone concentration increased again further west at Coalinga to approximately the same concentration as near Fresno. This indicated it could not be immediately assumed that ozone concentrations were uniform across the valley. Another anomaly was the occurance of much higher and similar ozone concentrations at Stockton and Turlock, while there were lower concentration at Modesto midway in between.

The best distribution of ozone monitoring sites across the San Joaquin Valley probably occurred in 1978 (Figure 3A) and 1977 (Figure 3B) when there appeared to be a concerted effort to evaluate ozone concentrations which could be meaningful for agriculture and forestry. In 1978 the same pattern of ozone concentrations occurred in Fresno county as in

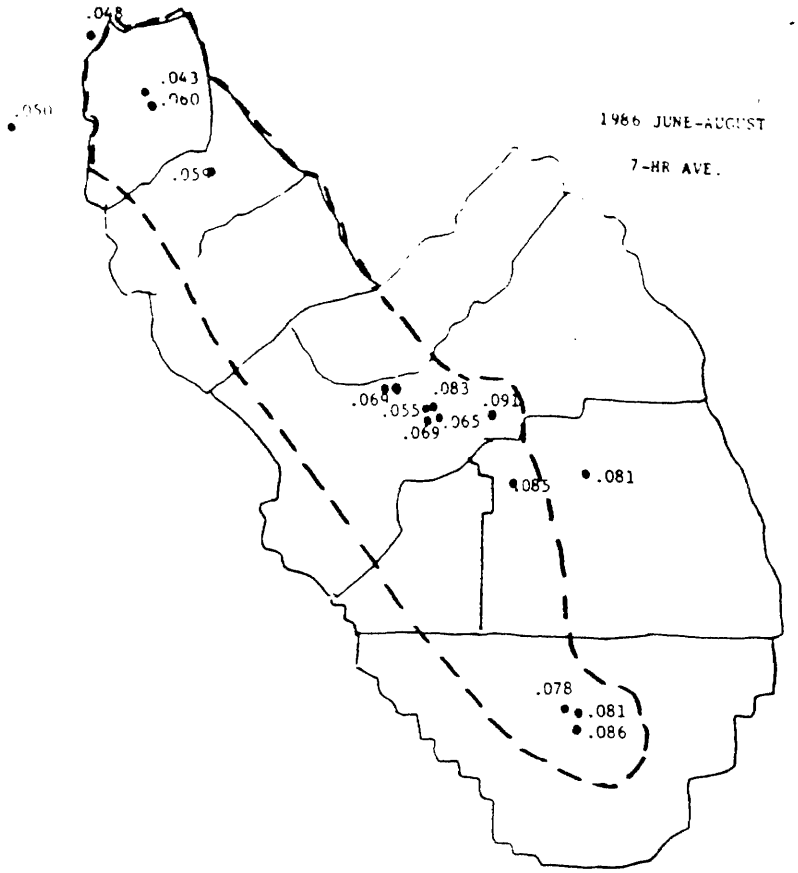

(A)

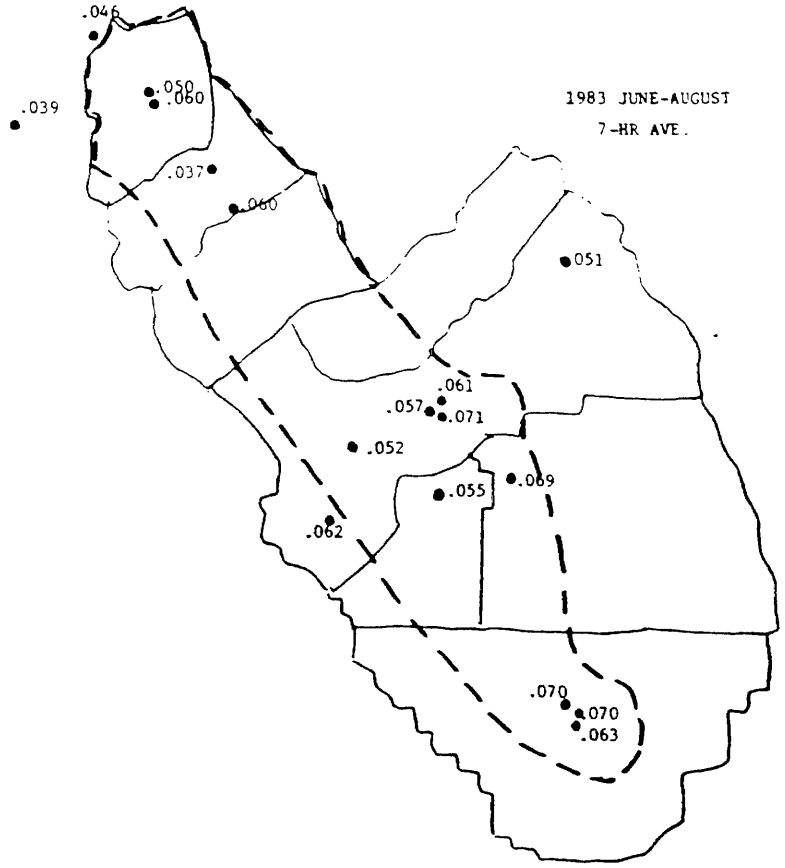

(B)

Figure 2. Ozone Air Monitoring Sites and June-August, 7 Hour (0900-1600 PST) Growing Season Averages in the San Joaquin Valley in (A) 1986, and (B) 1983.

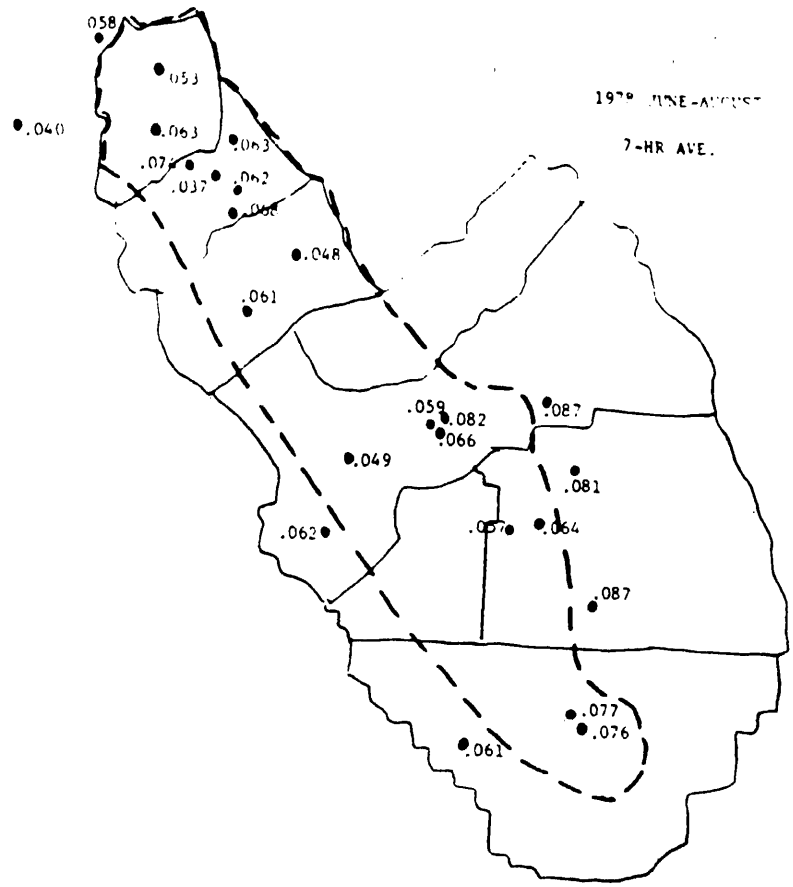

(A)

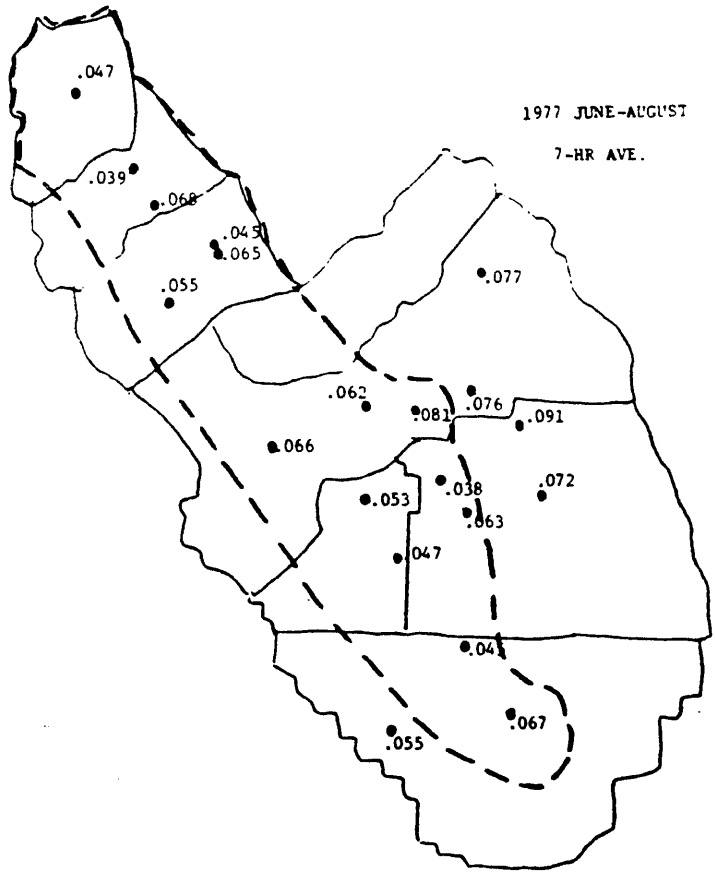

(B)

Figure 3. Ozone Air Monitoring Sites and June-August, 7 Hour (0900-1600 PSt) Growing Season Averages in the San Joaquin Valley in (A) 1978, and (B) 1977.

1983. In fact, the ozone gradient continued to increase eastward into the Sierra Nevada Mountains where the highest average ozone concentration occurred. Ozone concentrations were also fairly high in San Joaquin, Stanilaus, and Merced counties, again with the exceptions of low concentrations for one Modesto site and Merced. The presence of consistently high ozone concentrations at other sites in the area indicated that the low values may have been due to localized scrubbing of ozone by nitrogen oxides in cities. In any event, the values used for San Joaquin, Stanislaus, and Merced counties in 1986 appear to be reasonable based on more extensive monitoring in 1977.

Because the data base for ozone concentrations in 1986 was not good enough to determine ozone concentrations across most of the San Joaquin Valley in detail, we decided to focus on estimating more precisely crop yield losses only in the east vs. west sides of the southern part of the valley in Fresno and Kings counties. The ratio of ozone concentrations on the west side vs. east side of the San Joaquin Valley was determined to be 0.673 for seven hour averages and 0.716 for 12 hour averages. This was based on ozone data for Five Points (site 10229) vs. Fresno (site 10240) for 1978-1983. The June-August and April-October data are shown in Table 1. Only the April-October data were used for the analysis as that time period encompasses much more of the growing season for San Joaquin Valey crops than just the June-August data. The correction factor was multiplied x the ozone concentration on the east side of the valley to obtain an estimated ozone concentration for the west side for 1986.

In Fresno county the west side was considered to be detailed analysis units #216, 244, 245 and 247 from the summer land use survey data sheets from the California Department of Water Resources. Units 233, 234, 235, 236, 237, 239, and 240 were considered to be on the east side of the valley. For Fresno county acerages in the west vs. east side units fortunately were available for 1986. The next available year was 1979.

In Kings county the west side was considered to have units 241, 244, 245, 246, and 247; whereas the east side had units 235, 236, 237, 238, 239, and 242. Acerage data for the units were only available for 1981, with the next available year being 1973. The 1981 data were used for determining acerages on each side of the county in 1986.

Table 1. Ratios for Ozone Data collected at Five Points vs. Fresno[a]

Year	Hours	June-August	April-October
1983	7	0.720	0.720
	12	0.737	0.740
1982	7	0.635	0.677
	12	0.652	0.701
1981	7	0.692	0.784
	12	0.732	0.841
1980	7	0.615	0.602
	12	0.639	0.648
1979	7	0.524	0.571
	12	0.571	0.630
1978	7	0.745	0.682
	12	0.771	0.735

[a]Based on growing season averages for the hours and seasons indicated. The 7-hour average is for 0900-1600 PST, the 12-hour average for 0800-200 PST.

The ozone concentration on the east side of Kings county was determined by multiplying the ozone concentration at Visalia (site 54568) by a correction factor for July-December. This was necessary as no data were available from the Hanford site after June, 1986, i.e. most of the 1986 growing season. The correction factor was the ratio of hourly average ozone concentrations for Hanford vs. Visalia for August 1985 through June 1986. The ratio was 0.801 for seven hour averages and 0.832 for 12 hour averages. The relative growing season ozone concentrations for Hanford and Visalia were also examined for six previous years when both sides had data. The ratio between the two sites was similar to 1985-86.

Crop Data. The east/west acreage data was used to determine relative productivity on the two sites of the valley by differentiating the production on the two sides by a correction factor. For example, the data for alfalfa hay in Fresno county for 1986 indicated that 23.4% of the acreage was on the east side of the valley. Thus, of the total of 183,198 tons of alfalfa produced in Fresno County, 42,868 tons were considered to

be on the east side. This correction factor assumed that productivity per acre is the same on both sides of the valley which may or may not be true depending on the crop, weather, and other conditions. The crop data base was only in acreage or tons for the whole county. Therefore we had to assume that production was uniform.

No east vs. west side corrections were necessary for any other San Joaquin Valley counties as they are considered to be one similar unit by the California Department of Water Resources. The equations used for the crop loss assessment procedure were as described for Section II E of this report.

E. 1986 Statewide Assessment

The 1986 assessment was based on the information available in 1988-89, and was subject to changes based on corrections or additions to the programs and data base, and any new research reported in the peer reviewed literature or accessible reports. The following general changes were made in how the programs processed the data:

Time Periods. The time period of from 0900 to 1600 PST was used for seven-hour loss equations, and 0800 to 2000 PST for twelve-hour loss equations.

New Sites and Months. These changes were relatively minor for 1986. Some site changes were necessary for some crops and counties in 1986 as some air monitoring sites were added or absent in that year compared to 1984 and 1985.

A few different ozone air monitoring sites had to be used in 1986 compared to 1985 due to lack of data at sites used previously, or the presence of new sites. For example, site 13685 and not 13684 was used for El Centro in Imperial county. Site 27544 (Salinas) was still used for all of Monterey county as a new rural site, 27537 (Gonzales), only had data at the end of the year. Site 36192 (Redlands) was used instead of site 36204 in San Bernardino county. Site 42381 for Lompoc was added to the sites used from Santa Barbara county. Both Anderson and Redding were used for Shasta county. A new site 51897 (Pleasant Grove) was used in addition to site 51895 (Yuba City) in Sutter county. SIte 32817 (Quincy) was now available for Plumas county.

The most important adjustment was the use of several sites in the Fresno area to indicate ozone concentrations on the east side of Fresno county. Sites 10243 (Herndon) and 10245 (Skypark) were used to indicate ozone concentrations northwest of Fresno during the first and second halves of 1986, respectively. Sites 10230 (Parlier) and 10241 (Cal. State #2) were used to indicate ozone concentrations southeast of Fresno during the first and second halves of 1986, respectively. The data from northwest and southeast of Fresno were than averaged to indicate the concentration of ozone on the east side of Fresno county. The data for northwest of Fresno were also used for Madera and Merced counties.

Background Ozone Concentrations. The assessments primarily were calculated using 2.72 pphm for the seven-hour base, and 2.50 pphm for the twelve-hour base; using the following equation: 7hr = (12h - 0.004143) x 0.919, with n = 1002, and r = -0.9586 (as for 1984 and 1985). It was difficult to determine whether the twelve- or seven-hour base should be set at 2.5 pphm. However, the 2.5 pphm 12-hour base initially was chosen partially because it reflected a relatively low growing season average ozone concentration sites in California (Thompson and Olszyk, 1986). The 2.5 pphm base was close to the 1-2 pphm background ozone concentration suggested by Altshuller (1987). For potatoes a 10-hour base of 2.59 pphm was calculated by extrapolating between 2.50 and 2.72 pphm. It was as calculated according to the fourmula 2.50 + [2/5 x (2.72-2.50)].

The base has been assumed to be a 12 hour growing season average of 2.5 pphm for all yield loss estimates made in this assessment date. The 2.5 pphm base concentration was used because it 1) had previously been proven to be a useful reference point for the U.S. EPA NCLAN crop loss analyses (Heck et al., 1982, 1983, 1984a, 1984b), and 2) represents an approximate growing season average for major crops grown in relatively "clean air" areas of California.

The 2.5 pphm 7-hour mean background ozone concentration was selected by NCLAN researchers as it 1) was believed to represent the lower tropospheric ozone concentration attributable to transport from the stratosphere, 2) represented ozone concentrations at sites not affected by transport from anthropogenic sources, and 3) represented the charcoal filtered treatments from the NCLAN-sponsored crop loss experiments. [12] All of these assumptions can be questioned (Heuss, 1982; Lefohn and Jones, 1986); however, NCLAN has continued to use this as a background ozone value.

It was recognized that use of 2.72 pphm for the seven-hour equations is different from the 2.5 pphm used for seven-hour equations in previous NCLAN assessments (Heck et al., 1984a,b). However, the difference of only 0.22 pphm likely had much less impact on the analysis than other factors such as the finer geographical detail in our analysis. In any event, an extra computer run was made using 2.30 pphm for the twelve-hour equation and 2.50 pphm for the seven-hour equation to see what effect this base question had on the 1984 assessment.

Ozone Concentration-Yield Loss Equations. Equations were changed or added for 11 crops in the 1986 assessment. Changes for lemons and oranges were based on new research from the citrus project which indicated that the ozone data from two years before the harvest should be used. New research carried out by Dr. Patrick Temple of SAPRC indicated loss equations for four cultivars each for six crops: lettuce, onions, broccoli, tomatoes, beans and cotton. New equations were obtained for potatoes and melons.

All of the equation changes are indicated by a "+" in the following summary. Single equations suggested for the in-depth revised assessment and future economic analysis are indicated by a "*." Wherever possible, equations have the same number as in the 1984 and 1985 assessments. Up to eight equations are listed for each species.

Alfalfa Hay

Equation #1

$$I = [32.67 - (1.3902 \times 12\ hr)]/[32.67 - (1.3902 \times Base12)]$$

The equation was based on Olszyk et al., (1986a).

Equation #2

$$I = [100 - (9.258 \times 10^{-3} \times 10\ pphm)] \times 0.01$$

The equation was based on McCool et al., (1986).

Equation #3

$$+\ I = [118.96 - (4.088 \times 12\ hr)]/[118.96 - (4.088 \times Base12)]$$

The equation was based on Brewer (1982).

Equation #4

$$*,+\ \ I = [3160 - Base\ yr. - (109.63 \times 12\ hr)]/[3160 - Base\ yr. - (109.63 \times Base12)]$$

This equation is based on Temple et al., (1987), and is adapted from an original equation which considered ozone, water stress, and year of the study. All of California was considered to be under well-watered (non-water stress) conditions for this analysis so the water stress term was omitted. For year, Base yr. = 21 for 1984, and 0 for 1985. This equation and not #3 is now used for the assessment as the data have been accepted for publication and should appear shortly. This equation also is preferable as it is based on NCLAN research with multiple ozone concentrations, and not just a few concentrations as for equation #3.

Alfalfa Seed

* Equation #4 for alfalfa hay was used

Barley

Equation #1

* I = 0. Seven-hour equation was based on Temple et al., (1985b).

Beans-Dry

Equation #1

$$I = [100 - (0.024 \times 10\ pphm) \times 0.01$$

The equation was based on McCool et al., (1986).

Equation #2

$$I = [2878 \times e^{-(7hr/12.0)^{1.171}}]/[2878 \times e^{-(Base7/12.0)^{1.171}}]$$

The equation was based on Heck et al., (1984b), and Kohut et al., (1983).

* Equations #3-#6 were for four different cultivars of dry beans which were exposed to three concentrations of ozone at Riverside in the summer of 1987 (P. Temple, personnal communication). The losses for the four cultivars were averaged to determine the statewide yield loss for dry beans in 1986. The ozone data for all four cultivars was collected in Pacific Daylight Time (PDT), therefore a separate analysis had to be conducted using PDT hourly ozone data for the sites where beans were grown.

Equation #3

$$I = [25.2 + (20.147 \times 12\ hr) - (1.8011 \times 12\ hr^2)]/ [25.2 + (20.147 \times Base12) - (1.8011 \times Base12^2)$$

The equation was for the cultivar 'Linden Red Kidney'.

Equation # 4

$$I = [163.6 - (9.787 \times 12\ hr)] / [163.6 - (9.787 \times Base12)]$$

The equation was for the cultivar 'Sal Small White'.

Equation #5

$$I = [165.8 - (13.57 \times 12\ hr)]/[165.8 - (13.57 \times Base12)]$$

The equation was for the cultivar 'Sutter Pink'.

Equation #6

$$I = [167.6 - (13.98 \times 12\ hr)]/[167.6 - 13.98 \times Base12)]$$

The equation was for the cultivar 'Yolano Pink'.

Broccoli

* Equations #1-#4 were for four different cultivars of broccoli which were exposed to three concentrations of ozone at Riverside in the winter of 1987-88. (P. Temple, personnal communication). The only cultivar which had any change with ozone exposures was for equation one, the other three cultivars gave no changes. However, even equation #1 the change was an increase in yield and not a yield loss where broccoli is grown. Thus, the statewide yield loss for broccoli in 1986 was assumed to be zero.=. The ozone data for all four cultivars was collected in Pacific Daylight Time (PDT), therefore a separate analysis had to be conducted using PDT hourly ozone data for the sites where broccoli is grown.

Equation #1

$$I = [2199 + (187.58 \times 12\ hr)]/[2199 + (187.58 \times Base\ 12)]$$

The equation was for the cultivar 'Green Belt'.

Equations #2-#4

$$I = 0$$

The equation was the same for the cultivars 'Green Duke', 'Commander', and 'Emperor'.

Celery

Equation #1

$$* \; I = 0.$$

The 12-hour equation is based on Takemoto et al., (1987).

Corn-Field

Equation #1

$$* \; I = [11618.5 \times e^{-(7hr/16.0)^{3.709}}]/[11618.5 \times e^{-(Base7/16.0)^{3.709}}]$$

The equation was based on Kress and Miller (1985b).

Corn-Silage

Equation #1

$$* \; I = [11618.5 \times e^{-(7hr/16.0)^{3.709}}]/[11618.5 \times e^{-(Base7/16.0)^{3.709}}]$$

The equation was the field corn equation of Kress and Miller, (1985b).

Corn-Sweet

Equation #1

$$*,+ \; I = [315.02 - (12 \text{ hr} \times 8.2988)]/[315.02 - (Base12 \times 8.2988)]$$

The equation was based on Thompson et al., (1976).

Cotton

Equation #1

$$I = [367 \times e^{-(7 \text{ hr}/11.1)^{2.71}}]/[367 \times e^{-(Base7/11.1)^{2.71}}]$$

The equation was based on Heagle et al., (1986).

Equation #2

$$I = [0.8462 + (0.049 \times 7\ hr)]/[0.8462 + (0.049 \times Base7)]$$

The equation was based on Brewer et al., (1985).

Equation #3

$$* \ I = [2059 - (82 \times 7\ hr)]/[2059 - (82 \times Base7)]$$

The equation was based on Temple et al., (1985c).

Equation #4

$$I = [1988 - (1545.32 \times 7\ hr^2)]/[1988 - (1545.32 \times Base7^2)]$$

The equation was for a cool, moist year as described by Temple et al., (1985c).

Equations #5-#8 were for four different cultivars of cotton which were exposed to three concentrations of ozone at Riverside in the summer of 1987 (P. Temple, personnal communication). The data were not used for the crop loss assessment for cotton because equation #3 was based on data collected in the San Joaquin Valley using many more ozone concentrations. The ozone data for all four cultivars was collected in Pacific Daylight Time (PDT), therefore a separate analysis had to be conducted using PDT hourly ozone data for the sites where cotton is grown.

Equation #5

$$I = [32.3 - (2.025 \times 12\ hr)]/[32.3 - (2.025 \times Base12)]$$

The equation was for the cultivar 'C1'.

Equation #6

$$I = [38.6 - (2.663 \times 12\ hr)]/[38.6 - (2.663 \times Base12)]$$

The equation was for the cultivar 'GC 510'.

Equation #7

$$I = [25.4 + (8.833 \times 12\ hr) - (1.0528 \times 12\ hr^2)]/ (25.4 + (8.833 \times Base12) - (1.0528 \times Base12^2)]$$

The equation was for the cultivar 'SJ2'.

Equation #8

$$I = [32.6 + (3.535 \times 12\ hr) - (0.6721 \times 12\ hr^2)]/ (32.6 + (3.535 \times Base12) - (0.6721 \times Base12^2)]$$

The equation was for the cultivar 'SS2086'.

Grain Sorghum

Equation #1

$$* \ I = [8149 \times e^{-(7\ hr/31.7)^{2.952}}]/[8149 \times e^{-(Base7/31.7)^{2.952}}]$$

The equation was based on Kress and Miller (1985a).

Grapes

Equation #1

$$+ \ I = [9315 - (12\ hr \times 647)]/[9315 - (Base12 \times 647)]$$

The equation was based on Thompson and Kats (1970).

Equation #2

$$*,+\ I = [1.121 - (0.0663 \times 12\ hr)]/[1.121 - (0.0663 \times Base12)]$$

The equation was based on Brewer (1983) and Brewer, unpublished data.

Green Pepper

Equation #1

$$*,+\ I = 0$$

The equation was based on Takemoto et al., (1987). It is not used for the assessment as green peppers are not a separate crop in the CAR model.

Lemons

Equation #1

$$*,+\ I = [[-[0.5004 + (0.6224/12\ hr)]/[0.5004 - (0.6224/Base\ 12)] + 1] \times -.5] + 1$$

The equation was based on Thompson and Taylor (1969) based on the assumption that lemon trees cycled between "on" and "off" years as for oranges. Ozone was assumed to have no effect on lemons during "off" years. The ozone data were for two years before the harvest year, i.e. 1984.

Lettuce

Equation #1

$$I = 0$$

The 12-hour equation was based on Olszyk et al., (1986b).

Equation #2

$$I = [100 - (5.19 \times 10^{-2} \times 10 \text{ pphm})] \times 0.01$$

The equation was based on McCool et al., (1986).

Equation #3

$$* \; I = [3187 \times e^{-(7 \text{ hr}/12.2)^{8.837}}]/[3187 \times e^{-(\text{Base7}/12.2)^{8.837}}]$$

The equation was based on Temple et al., (1986).

Equation #4

$$I = 0.$$

The 12-hour equation was calculated by Dr. P. M. McCool (personal communication).

Equations #5-#8

Equations #5-#8 were for four different cultivars of lettuce which were exposed to three concentrations of ozone at Riverside in the winter of 1987-88 (P. Temple, personnal communication). There was no loss for any of the four cultivars. The data were not used for the crop loss assessment for lettuce because equation #3 was based on data collected in the San Joaquin Valley using many more ozone concentrations. The ozone data for all four cultivars was collected in Pacific Daylight Time (PDT), therefore a separate analysis had to be conducted using PDT hourly ozone data for the sites where lettuce is grown.

$$I = 0.$$

The equation was the same for cultivars Dark Green, Prizehead, Parris Island Cos, and Royal Green.

Melons (Cantaloupes, Honeydew, Watermelon)

* $I = [35.8 - (2.808 \times 7\ hr]/[35.8 - (2.808 \times Base7)]$

The equation was calculated from data shown in Snyder et al., (1988). That paper described results for muskmelon and not specifically for cantaloupes, honeydew melons, or watermelons, however, the equation was used for those species as it is the only one available. Furthermore, Dr. Simon, P.I. for the project in Indiana where this study was conducted, indicated that he also exposed watermelons in a similar study and they showed even greater yield losses than did muskmelons (Dr. Simon, personal communication). Therefore, it seemed to be a reasonable assumption that melons as a group were susceptible to ozone. Ozone concentrations were calculated for 0900-1600 CST from figures in the paper and yield data came from the text. Ozone concentrations and yields during the study, respectively in 1986, were 1.35 pphm and 31.3 kg/chamber for charcoal-filtered air; and 3.65 pphm and 24.9 kg for nonfiltered air. Ozone concentrations and yields, respectively in 1987, were 3.2 pphm and 28.9 kg for charcoal-filtered air; and 4.4 pphm and 22.6 kg for nonfiltered air. A linear regression equation was calculated from these for ozone concentration (x) and yield (y) data points.

Onions

Equation #1

$$I = [11.1 - (0.881 \times 12\ hr)]/[11.1 - (0.881 \times Base12)]$$

The equation was based on McCool et al., (1986), and P. M. McCool (personal communication).

* Equations #2-#5 were for four different cultivars of onions which were exposed to three concentrations of ozone at Riverside in the winter of 1987-88. (P. Temple, personnal communication). The only cultivar which had any change with ozone exposures was for equation #2, the other three cultivars gave no changes. Thus, the statewide yield loss for onions in 1986 was assumed to be the average of the losses for the four cultivars. The ozone data for all four cultivars was collected in Pacific Daylight Time (PDT), therefore a separate analysis had to be conducted using PDT hourly ozone data for the sites where onions are grown.

Equation #2

$$I = [5034 - (109.41 \times 12\ hr)]/[5034 - (109.41 \times Base\ 12)]$$

The equation was for the cultivar 'Rio Bravo'.

Equations #3-#5

$$I = 0$$

There equation was the same for the cultivars 'Nu Mex', 'Colossal', and 'Rio Hondo'.

Oranges

Equation #1

$$I = [53.7 - (12\ hr \times 2.611)]/[3.7 - (Base12 \times 2.611)]$$

The equation was based on Olszyk (1989).

Equation #2

$$I = [178.0 - (12\ hr \times 19.1280)]/[178.0 - (Base12 \times 19.1280)]$$

The equation was based on Thompson and Taylor (1969) modified by.

Equation #3

$$* + I = [[-[53.7 - (12\ hr \times 2.611)]/[53.7 - (Base12 \times 2.611)] + 1] \times -.5] + 1$$

The equation was based on Kats et. al., (1985b) and D. M. Olszyk (1989). The ozone data were for two years before the harvest year, i.e. 1984.

Potatoes

Equation #1 (Appendices D-1 through D-4)

$$+ \quad I = 0$$

The data from Foster et al., (1983) is not applicable on a statewide basis as described in Thompson and Olszyk (1986).

Equation #2 (Appendix D-5 #1).

$$* \; I = [11736 - (390 \times 10 \text{ hr})] / [11736 - (390 \times \text{Base } 10)]$$

The equation from Pell et al., (1988) relates ozone concentration to total weight of harvested tubers. The cultivar was "Norchip." The equation was based upon plants growing in charcoal-filtered (CF) air, nonfiltered (NF) air, NF plus 33% of ambient ozone, NF air plus 66% of ambient ozone, and NF plus 99% of ambient ozone; which resulted in growing season average ozone concentrations of 2.4, 4.8, 6.7, 8.5, and 10.0 pphm. Unfortunately, the ozone data were based on 1000-2000 EDT daylight hours. Therefore, a small separate run will be made to determine 10-hour averages for counties where potatoes are grown in California and the losses will be calculated by hand using a background ozone concentration of between 2.59 pphm for 12 hours and 2.72 pphm for seven hours.

Equation #3 (Appendix D-5 #2).

$$I = [5848 - (347.6 \times 10 \text{ hr})] / [5848 - (347.6 \times \text{Base } 10)]$$

The equation, also from Pell et al., (1988) is for Grade One tubers, the highest grade for commercial production.

Rice

Equation #1

+ $I = [1.0851 \times e^{-(7\ hr \times 0.0275)}]/[1.0851 \times e^{-(Base7 \times 0.0275)}]$

The seven-hour equation was recalculated using the treatment mean data of Kats et al., (1985a). This exponential equation had a slightly higher correlation coefficient than the linear equation. The exponential equation was used for the preliminary assessment.

Equation #2

+ $I = [1.0687 - (0.024 \times 7\ hour)]/[1.0687 - (0.024 \times Base7)]$

The equation was recalculated on a linear basis using the revised seven-hour values as described for equation 1.

Equation #3

*,+ $I = [e^{-(7\ hr/20.16)^{2.474}}]/[e^{-(Base7/20.16)^{2.474}}]$

This equation was calculated by Dr. David Glyer of the Department of Agricultural and Resource Economics from raw data described in general in the paper by Kats et al., (1985a). The Weibull function equation was calculated for use in the NCLAN national assessment and will be used in the revised assessments so that the results are comparable to NCLAN's. The equation is based on individual pot data for all three cultivars. A value of 2.5 pphm was assumed for the two out of seven hours when ozone was not added during weekdays, and both weekend days.

Spinach

Equation #1

$$I = [100 - (4.006 \times 10^{-2} \times 10\ pphm)] \times 0.01$$

The equation was based on McCool et al., (1986).

Equation #2

$$* \; I = [1.199 - (7 \text{ hr} \times 0.0625)]/[1.199 - (\text{Base7} \times 0.0625)]$$

The equation was based on Heagle et al., (1979).

Strawberries

Equation #1

$$* \; I = 0$$

The 10 pphm equation was based on McCool et al., (1986).

Sugar Beets

Equation #1

$$I = 0$$

The 10 pphm equation was based on McCool et al., (1986).

Equation #2

$$* \; I = 0$$

The 12-hour equation was based on Brewer (1978).

Equation #3

$$I = [64.7 - (2.58 \times 12 \text{ hr})]/[64.7 - (2.58 \times \text{Base12})]$$

The equation (#3) was for red table beets based on McCool et al., (1986). It is included only for comparison purposes and not to represent the effects of ozone on sugar beets. However, the equation could represent table beets in the specialized localities where they are grown.

Tomatoes-Fresh Market

Equation #1

$$* \; I = [100 - (2.32 \times 10^{-2} \times 10 \text{ pphm})] \times 0.01$$

The equation was based on McCool et al., (1986).

Tomatoes-Processing

Equation #1

$$I = [100 - (2.28 \times 10^{-2} \times 10 \text{ pphm})] \times 0.01$$

The equation was based on McCool et al., (1986).

Equation #2

$$* \; I = [32.9 \times e^{-(7hr/14.2)^{3.807}}]/[32.9 \times e^{-(Base7/14.2)^{3.807}}]$$

The equation was based on Heck et al., (1984b) and Temple et al., (1985a).

Equations #4-#7 were for four different cultivars of tomatoes which were exposed to three concentrations of ozone at Riverside in the summer of 1987 (P. Temple, personnal communication). The data were not used for the crop loss assessment for tomatoes because equation #2 was based on data collected in the San Joaquin Valley using many more ozone concentrations. The ozone data for all four cultivars was collected in Pacific Daylight Time (PDT), therefore a separate analysis had to be conducted using PDT hourly ozone data for the sites where tomatoes are grown.

Equation #3

$$+ \; I = [731 - (43.844 \times 12hr)]/BaseT$$

The equation was based on a personal communication from R. Brewer. The base represents the yield at 4.31 pphm ozone. Any ozone concentration below this would have a negative (really zero) loss. The common base is 542.

Equation #4

$$I = [9055 - (323.67 \times 12\ hr)]/[9055 - (323.67 \times Base12)]$$

The equation was for the cultivar 'FM783'.

Equation #5

$$I = [6119 + (1269.1 \times 12\ hr) - (135.6707 \times 12\ hr^2)]/(6119 + (1269.1 \times Base12) - (135.6707 \times Base\ 12^2)$$

The equation was for the cultivar 'Hybrid 31'.

Equation #6

$$I = [6315 - (210.7 \times 12\ hr)]/[6315 - (210.7 \times Base12)]$$

The equation was for the cultivar 'UC204C'.

Equation #7

$$I = [8590 - (412.8 \times 12\ hr)]/[8590 - (412.8 \times Base12)]$$

The equation was for the cultivar 'E6203'.

Turnip

Equation #1

$$I = [155.5 - (10.26 \times 12\ hr)]/[155.5-(10.26 \times Base12)]$$

This equation was recalculated by Dr. Patrick McCool based on the original data described in McCool et al., (1986). It is not used for the assessment as turnips are not a separate crop in the CAR model.

Wheat

Equation #1

$$I = 0$$

The 12-hour equation is based on Olszyk et al., (1986b).

Equation #2

$$* \; I = [5295 \times e^{-(7\ hr/14.5)^{3.326}}]/[5295 \times e^{-(Base7/14.5)^{3.326}}]$$

The equation was based on Kress et al., (1985).

Equation #3

$$I = [7857 \times e^{-(7\ hr/5.3)^{1.000}}]/[7857 \times e^{-(Base7/5.3)^{1.000}}]$$

The equation was based on Heck et al., (1984b).

Calculation of Ozone Exposure-Crop Loss Percentages. The same formulas described in the previous assessment also were used in the current assessments (Thompson and Olszyk, 1986) (Table 2). Modifications were made in the calculations and the programs so that crops without data had "No Data" following statewide loss. Two other changes were the inclusion of a printout of the crop-by-crop statewide losses at the end of the file, and a weighed loss for all types of grapes, onions, or wheat at the end of the file. In addition, the program was modified to be able to input the correct twelve-hour lemon and orange county averages based on the previous year's ozone data.

A number of assumptions were made for each crop in order to use the dose-response equations for statewide crop loss assessments. These assumptions were based on using information in the crop and air quality data bases, along with discussions with research scientists, county farm advisors, and recommendations from the 1985, 1986, 1987, and 1988 workshops. The following section details the assumptions for those crops for

Table 2. Calculation of Ozone Exposure-Crop Loss Percentages

- Sample O_3 Exposure Crop Yield Equation (Linear)

  (1) Yield = a + (b x Ozone exposure)

  where the ozone exposure is a 12-hour (12-hr) or 7-hour (7-hr) growing season average, or hours x pphm for pphm >10 (10 pphm). The 10 pphm equations give percent yield reduction directly.

- Sample County Yield Loss Index Equation

  (2) $I = \frac{a + bx}{a + bx'}$

  where I = loss index as a fraction of 1.00 = no loss; x = ambient air ozone dose or trial ozone standard; and x′ = a 'base' or background dose, e.g., 2.5 pphm seasonal average for 12 hour equations or 2.72 pphm seasonal average for 7 hour equations, or 2.59 for 10 hour equations.

- Sample County Percent Yield Loss Equation

  (3) Percent Loss = (1.00 - I) x 100

- Sample County Potential Yield Equation

  (4) Potential Yield = $\frac{\text{Actual Yield}}{I}$

- Sample Statewide Potential Yield Equation

  (5) Statewide Potential Yield Index = $\frac{\Sigma \text{ Actual Yields}}{\Sigma \text{ Potential Yields}}$

  where actual yields are for all counties in the State where the crop is grown.

- Sample Statewide Percent Yield Loss Equation

  (6) Statewide Percent Loss = (1.00 - Statewide Potential Yield Index) x 100

which ozone exposure-yield response models were available. The equations give data for the county yield loss indexes (I). The indexes are then converted to % loss by equation (3) of Table 1. The equations include ozone concentrations in three forms: 12-hour (0800-2000) growing season averages (12 hr), 7-hour (0900-1700) growing season averages (7 hr), and hours x pphm > 10 pphm for the growing season (10 pphm). The loss index

for potatoes was calculated by hand using a 10-hour (0900-1900 PST) equation.

F. Future Loss Projections

An analysis was made of estimated future crop yield losses in 1995 and 2010 vs. 1986 for the Central Valley (Sacramento and San Joaquin Valley air basins). The focus was only on the Central Valley and not the entire state because agricultural production in the Valley is the primary determinant of statewide production, and because future ozone data could only be determined for the Valley within the time frame required for this analysis. The ozone air quality data for 1995 and 2010 was predicted based on information from the ARB, Dr. Arthur Winer (SAPRC atmospheric chemist), and others. The future ozone data was based on 1986 hourly data for the state, but modified to reflect predicted changes in NO_x precursors for ozone based on transportation, industry, and population and/or other projections as determined by ARB Technical Support Division and Research Division.

The modified ozone data was used to estimate crop losses with different air quality scenarios for the Central Valley. The scenarios were: increased ozone in 1995, increased ozone in 2010, and the 0.09 ppm statewide standard met in 2010 (rollback to 0.09 ppm). Hourly ozone concentrations for 1986 were modified based on assumed percentage increased in NO_x emissions for 1995 and 2010 vs. 1986. In 1995 the projected increases were +0.4% and -1.0% for the Sacramento and San Joaquin Valleys, respectively. In 2010 the projected increases were +23% and +16% for the Sacramento and San Joaquin Valleys, respectively. Only those hourly ozone values above 4 pphm were assumed to increase as values of 4 pphm and lower were considered to be "background" ozone not subject to changes due to pollutant emissions controls. The formula for increased hourly ozone concentrations was:

(1) New value = 4 + [(Old value - 4) x Increase Factor]

The increase factor was equal to 1 plus the percentage increase in emissions. Separate increase factors were determined for the Sacramento vs. San Joaquin Valleys.

The third scenario provided for meeting of the California Ambient Air Quality Standard for ozone by 2010, i.e. no hourly value at any monitoring site would be greater than 9 pphm. Hourly values for 1986 were modified ("rolled back") only if the maximum hourly value for the year was greater than 9 pphm. The values were not changed if the maximum value was less than or equal to 9 pphm. The formula for the modified ozone concentrations was:

$$(2)\ \text{New value} = 4 + \{(\text{hourly val.} - 4) \times [5 / (\text{max. hr.} - 4)]\}$$

The maximum hourly value was for each air monitoring site for the entire year. Only those hourly ozone values above 4 pphm were assumed to decrease as values of 4 pphm and lower were considered to be "background" ozone as described above for equation (1). The 5 was the difference between 9 (standard) and 4 (background ozone). The 2010 rollback scenario used the ambient 1986 data as modified by equation (2).

All other equations and assumptions used for 1986 standard statewide assessment described in Section II.G. of this report were used for the future loss scenarios. After the calculations were made, a computer tape with the loss data per county for each crop was forwarded to Dr. Richard Howitt of the Department of Agricultural Economics at UC Davis. Dr. A. Winer, Dr. R. Howitt, and Dr. D. Olszyk than coauthored a paper on the potential effects of air pollution on agriculture which was part of a white paper on the future for California Agriculture in 2010.

III. RESULTS AND DISCUSSION

A. Fruit and Nut Tree Workshop

The workshop was held on November 16, 1988, at the Kearney Agricultural Center at Parlier, California. Dr. Ted de Jong of the Department of Pomology of the University of California, Davis, was the local host for the meeting. He contacted a number of cooperative extension, U.S. Department of Agriculture, and agribusiness people which insured that the specialists in fruit and nut crops were well represented.

Appendix A is a copy of the final agenda for the meeting. Twenty individuals attended as shown by the attendance list shown in Table 3.

Table 3. Attendees at 1988 Air Pollution and Fruit and Nut Crops Workshop

Name	Affiliation
Wes Asai	Farm Advisor, Stanislaus County
Bob Brewer	Kearney Ag. Center, UC Riverside
Kevin Day	Kearney Ag. Center, U. California
Mark Dibble	Kearney Ag. Center, U. California
Scott Johnson	Kearney Ag. Center, UC Davis
Ted de Jong	Pomology Dept., U. California
Davis Craig Ledbetter	USDA ARS/Fresno, California
David Olszyk	SAPRC, UC Riverside
Paul D. LaVine	California Almond Board
Dennis Margosan	USDA ARS/Fresno, California
Maxwell Norton	Farm Advisor, Merced County
David Ramos	Pomology Dept., U. California
Davis Andrew Remus	USDA ARS/Fresno, California
Bill Retzlaff	Kearney Ag. Center, U. California
John Stumbs	Agricultural Communications, UC Davis
O. Clif Taylor	SAPRC, UC Riverside
Sydney Thornton	Air Resources Board, Sacramento
David Tingey	U.S. EPA, Corvallis, Oregon
Dane Westerdahl	Air Resources Board, Sacramento

The meeting began with remarks by the representatives from the Air Resources Board and U.S. EPA. Next there were presentations on fruit or nut trees and air pollution research by UC scientists. Dr. Bill Retzlaff described recent results from the fruit and nut tree screening study still underway at Kearney at that time. Dr. Dave Olszyk described recent results from acute and chronic ozone exposures of fruit and nut tree seedlings at Riverside. Finally, Dr. Bob Brewer described previous work on almond trees and ozone at Kearney. The discussions continued over lunch and were followed by a tour of the current air pollution and fruit tree studies at Kearney. Dr. Bill Retzlaff first described the nine species trials being carried out in the square based open-top chambers at Kearney. He then described the study where chambers were being placed over young plum trees. Following the tour the fruit and nut crop specialists voiced their ideas concerning air pollution and fruit or nut trees and made suggestions for future research.

Major points of discussion during the meeting were:

* A basic discussion of the components of air pollution which can affect tree fruit and nut crops.

* The meaning of the decreases in photosynthesis found for some species exposed to "twice" ambient ozone in the current study at Kearney.

* The most ozone sensitive species of fruit and nut crops appear to be almonds, apricots, and oriental plums. In contrast, peaches and nectarines appear to be tolerant as shown by studies both at Kearney and Riverside.

* Based on the current multiple-species study at Kearney, the long-term study with Casselman Plum appears to be reasonable for determining the effects of ozone on a representative stone fruit tree species.

* Walnuts may be a future possibility for study as dwarf cultivars now exist. The cultivar 'Chico' may especially be useful as it is a fast growing tree and, thus, probably more susceptible to ozone. All the reserves tend to go into the nuts, resulting in the nuts limiting tree growth and keeping it dwarf.

* While quality is increasing in importance, the industry still responds most to quantity for fruit crops and totally to quality for nut crops.

* Fruit wood is necessary for a good crop of fruit and should be evaluated in pollutant studies. Temperate deciduous trees tend to store reserves in that wood. Pruning a tree invigorates it.

* Branch chambers may be useful for some crops, but there are many unknowns. We need to determine whether starch reserves stay in branches or move from them. This could be determined with C^{14}. However, you could girdle the bark below the branch to prohibit input into the branch.

* Stay with chambers. We know how they work and the tree size can be reduced to fit the chamber to indicate what pollutants are doing to trees.

* An antioxidant may possibly be used to look at the effects of ozone on trees.

* Studies can not be done in southern California on commercial varieties because the differences in chilling requirements vs. the Central Valley.

Key areas of interest for future research were:

* Fruit finish problems are of concern and need to be studied. Research should focus on apricots, nectarines and peaches. Apricots across the whole valley were affected this year. The problem is increasing and a number of calls have come in concerning it, especially in August when there were heavy losses to packed fruit from the blemish problem. The problem is limited to the upper surface of the fruit epidermis.

* We need to look in general at the effects of air pollutants on post-harvest physiology of crops. Fruit may be actively taking up pollutants themselves, as found with sulfur injury to apricots from SO_2 in sulfur houses.

* Additional work should be conducted on yield models. Currently they are a long way from adding a stress to the photosynthesis-yield models. Multiplicative effects are very difficult to deal with in models.

* Research should focus on the relationship between effects of air pollution on bud development and its relationship to yield losses.

* Modeling of tree responses should indicate a general way ozone may affect the trees.

* Research should also focus on how the genetics of species can be manipulated to adapt to the polluted environment. Then species by species studies may not have to be carried out.

* Fruit set should be evaluated for all species as it is the primary limiting factor for yield.

The primary benefit of the meeting was a greater understanding of the information available from people working directly with these crops, the information needed by ARB personnel for the standard setting process, and identification of research priorities for fruit and nut crops. A general consensus emerged to focus research on the most sensitive crops, especially almonds, apricots and cherries, and not more resistant crops such as peaches and nectarines. Research priorities regarding the sensitive species will be addressed with specific proposals in the future.

B. Tree Exposure System Review

Field exposure systems to determine the effects of air pollutants on plants have evolved to address two main considerations: (1) how to provide controlled concentrations of air pollutants, while (2) maintaining environmental conditions as close to natural as possible. Three major types of systems have been developed: (A) whole-plant enclosure systems, i.e. chambers; (B) open-air pollutant release systems, i.e. "ZAPS" (for Zonal Air Pollutant Systems), and (C) branch chambers. This review first considers the development and current designs for these systems and their applicability for trees. All available types of systems are tabulated and referenced. Next 10 types of whole-plant chambers are selected and evaluated in more detail. Finally, one type each of (A), (B), and (C) are evaluated for potential costs, ease of maintenance and operation, and other factors. This review used the original papers as well as excellent recent reviews of exposure systems by Heagle et al., (1988), McLeod et al., (1988), Hogsett et al., (1987), and the Commission of the European Communities (1986).

Whole-Plant Enclosure Systems; Historical Overview. Since the beginning of the 20th century, the effects of air pollution on plants in the field have been studied using many types of exposure systems. The earliest chambers were designed to evaluate plant respnses to SO_2 and fluoride (Haselhoff and Lindau, 1903). Hill et al., (1959) at American Smelting and Refining Co., Salt Lake City, Utah, and Zimmerman and Crocker (1934a,b) at Boyce Thompson Institute for Plant Research, Yonkers, New York, became pioneers in providing specialized enclosures with controlled atmospheres for studying plant responses. A little later Thomas (1961) correlated apparent photosynthesis with growth, leaf chlorosis, and other visible plant responses using chambers. All of these studies used closed chambers with the problems inherent in these structures (i.e., reduced light, increased temperature and humidity, and reduced air flow over the leaf surfaces).

Beginning in the mid-1960's Thompson et al., (1966) designed new types of chambers to overcome the problems of reduced air flow over leaf surfaces and the attendant temperature and humidity buildup and still provide controlled atmospheres for studying both effects of photochemical

oxidants and/or fluoride on citrus trees. Plastic greenhouses were used which had large blowers and intake doors which closed for short periods to measure apparent photosynthesis and transpiration of the entire trees. This design was a qualified success because the temperatures within the chambers increased rapidly by as much as 3-10°C when the intake doors reduced the rate of ventilation. This caused reduced photosynthesis and transpiration thus further changing the inside environment as compared to unenclosed trees. Despite ventilation rates of two air volumes per minute when the doors were open, temperatures within the chambers were 4-5°C above ambient when outside levels were above 38°C.

The recognition by plant scientists that closed chambers greatly altered the plant environment led two groups of researchers to design types of open-top chambers. Mandl et al., (1973) and Heagle et al., (1973) constructed plastic-covered, vertical open-top cylinders which relied on blowing controlled atmospheres into the base of the structure to prevent ingress of ambient air. Blowers provided about two chamber volumes of air per minute. Later, Thompson et al., (1976) constructed similar structures with air supplied midway between the base and top in an attempt to avoid ingress of outside air. All of these designs were reasonably satisfactory when wind velocities were less than 20 miles per hour. At greater windspeeds the air impinging on the sharp edge of the chamber caused much turbulent flow and failure of the air injected from the bottom to prevent exposure of the plants to outside air.

Kats et al., (1976) designed a "baffle" which consisted of a truncated cone mounted over the leading edge of the top of the open-top cylinder. This device interrupted the oncoming wind and shunted it up and partially over the top of the chamber reducing ingress of outside air. This design, while improving the exclusion of outside air, was difficult to fabricate and attach to the chambers. An alternative was designed by several investigators including Nystrom et al., (1982) and Kohut et al., (1986) which consisted of a nozzle-type frustrum attached to the top of the open cylinder. This innovation reduced the open area of the open-top by about one-half but prevented ingress of ambient air almost completely. This chamber design was used by many of the researchers in the National Crop Loss Assessment Network (NCLAN) study funded by the Environmental Protection Agency from 1980-1987.

Buckenham et al., (1981) tried to further restrict the intrusion of outside air into chambers with a top frustrum by mounting an inner lip extending into the chamber the same horizontal distance as the top of the frustrum. This horizontal lip was located about one-fifth of the chamber height down on the side of the cylinder. The lip further reduced the intrusion of outside air by about 2/3. This design has not been adopted by other investigators.

Dr. R. F. Brewer (1978 and 1983) constructed open-top chambers over row crops in the San Joaquin Valley, including sugar beets, which featured rectangular bases tapered to a cone at the top. Ventilation was about two chamber volumes per minute. Performance characteristics were similar to those of the NCLAN chambers. Later, Hogsett et al., (1985) utilized the NCLAN chamber design for a programmable exposure control system. They also added a "rain-hat" to exclude all ambient rainfall from the chambers.

Overview of Chamber Types. Appendix Table B-1 lists sites, designs, and references for field exposure chambers which have been used during the past half century in attempts to measure effects of various air pollutants on whole plants. Fifty-one different types of chambers are listed, 21 from the United States and Canada and thirty from Europe. There has been a trend toward uniformity of design in the U.S. and Canada whereas each individual investigator still tends to have his or her own type of chamber in Europe.

The basic problems encountered in enclosing plants for all these chambers was the tradeoff between control of pollutant concentrations and modification of the environment. A reduction in light always occurs unless some supplemental lighting is provided. Most coverings are opaque to many of the short and longer wavelengths of sunlight resulting in a more herbaceous type of growth. Various plastic films have different degrees of transparency. Vinyl and polyethylene are opaque to much of the infrared wavelengths of sunlight which traps heat in chambers. Fluorocarbon plastics such as "Teflon" and "Tedlar" allow the longer wavelengths to pass, but are expensive and difficult to install without special cements.

Wall effects can be troublesome and some investigators ignore the results of plants grown in the areas next to the chamber walls. If plants can be moved, regular re-arrangement of position will overcome some of these variations.

Reduced airflow over test plants is probably the most difficult problem to overcome in chambers. Air flow must be adequate to insure normal leaf gas exchange without resorting to very large slowly operating blowers and some air distributing device which avoids jet exposure of some leaves or very little air movement over others. In ambient air, a windspeed of 1.0 mph gives air velocities of 28.4 m/min. Thus, chambers having diameters of 3.0 m would require 9.0 + changes of air per minute to give ambient conditions. As windspeeds increase, the problem of replicating ambient conditions in chambers is exacerbated. Convenient-sized blowers presently in use inject two to four chamber volumes of air per minute. Hill (1967) approached this problem in environmental chambers by mounting a large slow moving fan in the wall of the chamber behind a perforated plate which provided a controlled "breeze" over test plants.

Some temperature build-up always occurs in outdoor chambers due to reduced air flow plus trapping of longer wavelengths of light. Transpiration of enclosed vegetation can increase absolute humidity inside chambers if air flow is low and a large amount of plant material is present. However, the increased temperature in chambers results in relative humidities which are similar to those outside in drier climate areas such as California.

Use of open-top chambers has overcome many of the above problems, but ingress of ambient air as windspeeds increase cannot be avoided. Attempts to prevent the microturbulence caused by impingement of the oncoming air stream on the leading edge of the chamber have had mediocre success. This turbulent flow allows some ambient air to enter the chambers even though the air movement within the chambers is vertical because of the blowers at the base. The use of the cone-shaped frustrum on the top of "open-top" chambers reduces ingress of ambient air, but also reduces the "open-top" area to about one-half that of a vertical cylinder.

Detailed Analysis. Ten of the chambers listed in Appendix Table B-1 were selected as being more practical, functional, and economical to construct or which provide the most "normal" environmental conditions for experimental use to study effects of air pollutants on trees (at least seedlings) (Table 4). The chambers were rated either as poor, fair, good, or excellent for six important characteristics. An estimate for the percentage ambient pollutant removal is also given. The open-top cylinders used by the U.S. Department of Agriculture (#2) and Boyce

Table 4. Summary of Performance of Ten Types of Experimental Chambers for Studying Effects of Air Pollutants on Vegetation

Table B-1 No.	Site	Degree of Air Exclusion	Pollutant Control	Ease of Construction	Porta-bility	Durability	Environment Similar to Ambient	Ambient Pollutant Removal (%)
1	Boyce Thompson Institute Cornell University Ithaca, NY	Good	Good	Good	Good	Good	Good	60-70
2	U. S. Department of Agriculture, North Carolina State Raleigh, NC	Good	Good	Excellent[a]	Good	Good	Good	60-70
6	University of California Experiment Station Parlier, CA	Good	Fair	Fair	Poor	Good	Fair	60-65
11	University of British Columbia Vancouver, BC	Good	Good	Fair	Poor	Good	Good	70
15	University of California Riverside, CA	Excellent	Excellent	Poor	Poor (Fixed)	Excellent	Fair	90
18	University of California Riverside, CA	Excellent	Good	Poor	Poor (Fixed)	Excellent	Good	90
22	Institut fur Hohenkiran Stutgaart, W. Germany	Fair	Fair	Good	Fair	Good	Good	Unknown
26	Institute fur Produklions und Okotoxicologie Braunschweig, W. Germany	Fair	Good	Good	Fair	Good	Poor	50-60

Table 4 (continued) - 2

Table B-1 No.	Site	Degree of Air Exclusion	Pollutant Control	Ease of Construction	Porta-bility	Durability	Environment Similar to Ambient	Ambient Pollutant Removal (%)
36	U. S. Department of Agriculture, North Carolina State Raleigh, NC	Good	Good	Fair	Fair	Good	Fair	90
37	Boyce Thompson Institute for Plant Research Cornell University Ithaca, NY	Fair	Fair	Good	Fair	Good	Fair	90

[a]Largely because of ready availability of parts.

Thompson Institute (#1) are reasonably simple structures and provide a means for supplying test atmospheres to plants without excessive exposures to ambient pollutants. They are especially useful for studies where air pollution is moderate. The basic operations principle is similar for both types of chambers and they are simple and economical to construct of materials widely available. They may be dismantled in a short time in case of inclement weather or the requirements of the experiment. Air distribution is uniform over the plants and, depending upon the rate of ventilation, avoids excessive temperature build-up within the chamber. In humid climates they are most useful because the test plants do not increase the interior relative humidity greatly over that in the ambient atmosphere. In arid climates the transpiration of vegetation can increase chamber humidity significantly causing a greater greenhouse effect. Ambient air exclusion is equal to most other chamber designs.

In Braunschweig, W. Germany, H. J. Jager (personal communication) (#26], constructed a plastic covered chamber similar in design to the USDA structure, but this had a "rain cap" over a truncated cone frustrum. This is reported to exclude 50-60% of ambient SO_2 in the area.

Closed chambers designed by Musselman et al., (1986) (#15) can be used in highly polluted areas and the test atmospheres are limited only by the efficiency of the air filtration system. This design has a closed plant exposure area, glazed with Teflon film and supplied with air blown through buried ducting. The Teflon is more transparent to infrared light than PVC thus aiding dissipation of temperature build-up, but more important the soil surrounding the buried ducting cools the incoming air and provides an "air-conditioned" atmosphere to which desired fumigants can be added. Average temperature rise is about 2-4°C inside vs. outside on hot days (35-40°C maximum) with 1.4 volumes of air supplied per minute. Higher rates of ventilation would reduce this effect. Air distribution is good and levels of added pollutants can be better controlled than in open-top chambers because no intrusion of ambient air occurs.

A more durable, but more expensive domed structure which was well shaped to accommodate citrus trees was designed by Kats et al., (1985) [Table 4, #18]. This chamber and its function has been described in detail in past reports to the ARB for the citrus project.

Canadian workers, Runeckles et al., (1978) (#11), designed a hollow plastic-covered cone to study conifers, 4.9 m high, with down draft ventilation and having filters, fan and rain shield supported in a cabinet over the top of the structure. The light inside is 90-93% of outside and temperatures are about 1°C higher and relative humidity 10% less than outside. The novel form would fit the canopy of many conifers. It would be especially useful at higher altitudes where shading caused by the blower would be minimal. The pollutant exclusion and temperature buildup is comparable to the NCLAN type chambers.

German investigators, Seufert and Arndt (1985) (#23) constructed a large open-top cylinder with a baffle at the top and screening over the top. Filtered air was injected at two levels. Temperature rise inside was 2-3°C and air movement over twigs on the tree was 0-2 m/sec (0-4 mph). Brewer (1978) [Table 1, #6], adapted the open-top structures to accommodate grapevines growing in rows at Parlier, CA, by making a rectangular based chamber.

Mandl (1988) at Boyce Thompson Institute for Plant Research, Cornell University et al., (1989) (#37) have recently developed very large chambers, 6.2 m dia and 11 m high. This structure, designed for use over trees, uses two blowers each delivering 170 m^3/min achieves 88-92% exclusion of ambient air. Temperature rise inside is 5-7°C and ozone is reduced 90-92% from outside when ambient levels are 100 ppb. This design is essentially an expanded NCLAN structure. They also have developed a large chamber, 4.6 m diameter x 3.7 m high, similar to that of Brewer. The chamber had a frustrum which reduced the open-top area by 50% and a horizontal baffle below the frustrum to aid in exclusion of ambient air. Air temperature increase inside vs. outside was 2.5°C, but leaf temperatures were as much as 9°C higher.

At the present time, the most practical, economical design for large chambers to enclose larger whole trees is an expanded version of the NCLAN type (Heagle et al., 1989) [#30, Figure 4]. The aluminum-framed, vinyl plastic-covered chambers fan-type blowers have been used for a whole growing seasons. While they can be damaged by heavy winds or snowfall, they represent a compromise between the previously detailed environmental problems and will allow the use of a prescribed controlled atmosphere for year-round exposures of test plants.

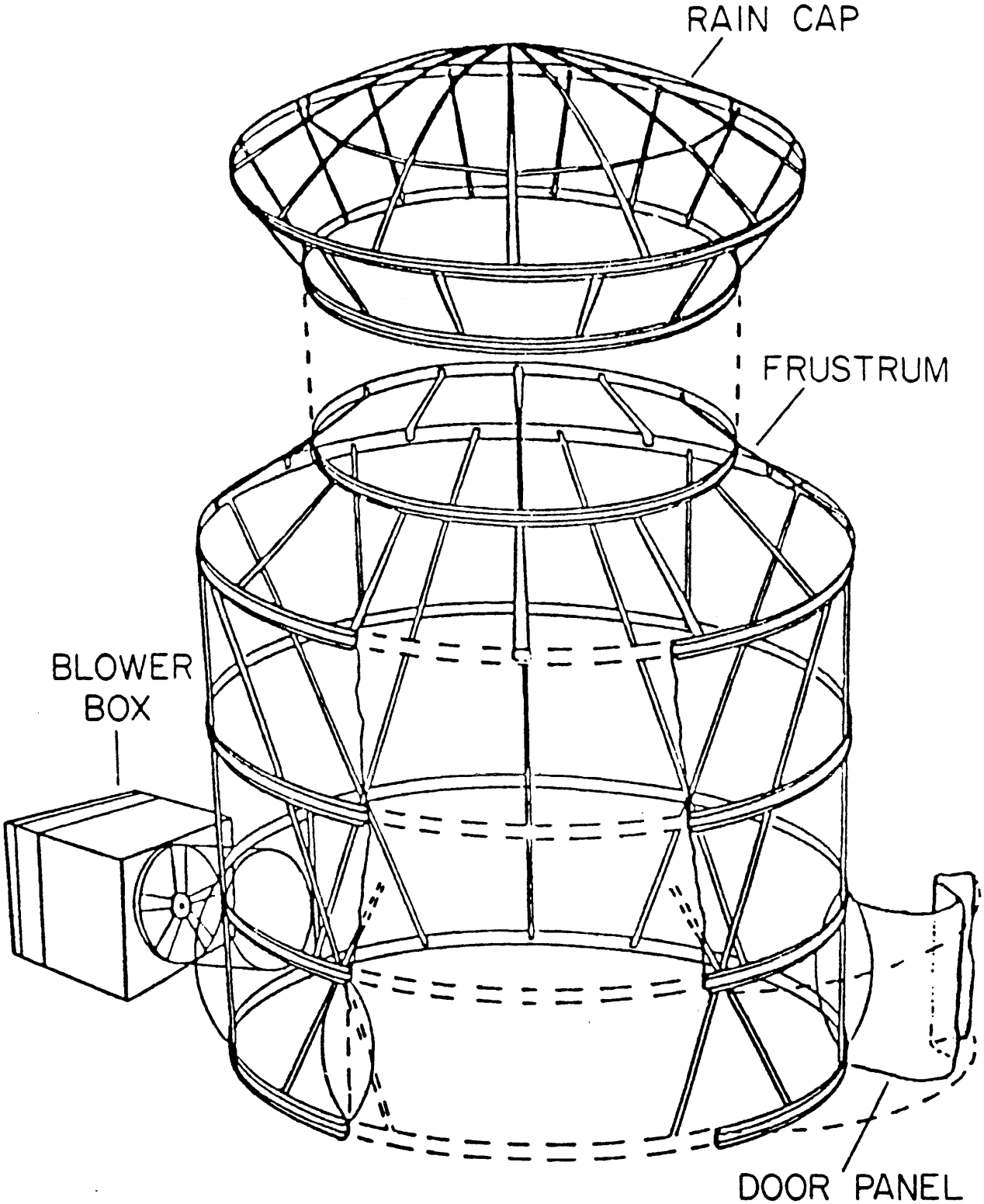

Figure 4. Diagram of large tree exposure chamber developed by the USDA at Raleigh, North Carolina. Figure redrawn from Heagle et al. (1989).

Open Air Systems. A total of 18 open air exposure systems were identified for possible use with vegetation. These are listed in Appendix B, Table 2. Twelve systems used ambient air to dispense pollutants. Six used high pressure blowers.

In areas where the ambient atmosphere is reasonably unpolluted, exposure systems can be used which utilize grids of emitting perforated pipes in various configurations which dispense the desired pollutant. These utilize natural air movement to distribute the gas over the test area. If a given wind direction prevails much of the time, a single line of emitters can be positioned upwind as used in Alaska, Colorado, and the Mojave Desert (#'s 6, 11, 13 in Appendix B, Table B-2).

Where winds come from several directions a more complex system of emitters is requried. The systems designed for use at Colstrip Montana (#3) and Argonne, Illinois (#8, Appendix B, Table B-2) used parallel and/or perpendicular emitters to expose large areas to SO_2.

Greenwood et al., (1982) at the University of Nottingham developed the system further by forming a hollow square emitting system with an area of 400 m^2 which exposed wheat to a constant mean level of SO_2 above the varying ambient concentration (#9, Appendix B, Table 2). A microcomputer controlled emitting system responded to various wind direction and wind speeds.

The most well engineered systems have been developed by the Central Electricity Research Laboratories in Leatherhead, England, which has two sites (Little Hampton and Liphook) and the Research Institute for Plant Protection at Wageningen, The Netherlands.

The exposure system at Little Hampton (#14, Appendix B, Table B-2) [McLeod et al., 1985] consists of a grid of polypropylene pipes on the ground with 1.5 m tall risers at 3 m intervals. This network covers a circular field of 27 m diameter. The vegetation sample area in the center is 9 m diameter. Each riser is equipped with an orifice at the top for gas dispensing. Dispersion modeling showed that in order to achieve a homogeneous air-gas mixture over the sample area, the gas had to be dispersed at two different heights. Therefore the circular plot was surrounded by an assembly with risers of 0.5 m tall also equipped with gas emitters. A ratio of gas dispensing rates between low and high emitters of 10:1 was necessary to achieve a uniform distribution of the pollutant over the sample area.

The air to the gas dispensing system is provided by a centrifugal fan and the SO_2 is injected from a cylinder. The flow rate of the SO_2 is controlled and measured with a mass flow controller before it is injected into the air stream. Since the demand for SO_2 is variable, a feed back control system consisting of a computer and an SO_2 analyzer are used to provide signals to the mass flow controller to keep the SO_2 level over the sample area on target. At low wind velocities (<1/m/sec), the system is automatically turned off to prevent excessively high concentrations. One instrument was used to measure the SO_2 concentration in five separate test areas, at five-minute intervals. Therefore, each plot was examined once every 20 minutes and, consequently, SO_2 flow adjustments were also made at 20-minute intervals. Apparently this degree of control was acceptable according to the authors. We have to keep in mind, however, that their conclusions are usually based upon the comparison of hourly average concentrations over the sample area with the target concentrations. Higher frequency fluctuations would certainly show much more severe deviations from the target levels.

The system designed for open air exposures to trees in Liphook (Figure 5) is based upon the same principles as the one in Little Hampton, but there are some major design differences (also see #17, Appendix B, Table 2). Each of five experimental plots at this site consists of a 50 m diameter circular array of polypropylene pipes. It is divided in four sections and each section has 13 vertical risers with gas emitters of 0.5 and 2.5 m height. The emitter orifices were designed so that the low:high emission ratio was 1:12. The central sample area was 25 m diameter. The concentration of the pollutant varied approximately 10% from the edge to the center of the sample area. The four sections are individually controlled by electrically operated ball valves. Two sectors are operated depending upon the wind direction. The polluting gases supplied are SO_2 from cylinders and O_3 from a large ozone generator. Feedback via instruments through a computer with interface provides controlling voltages to the mass flow controllers for the SO_2 and to the ozone generator for the ozone. The air is sampled in the center of each plot

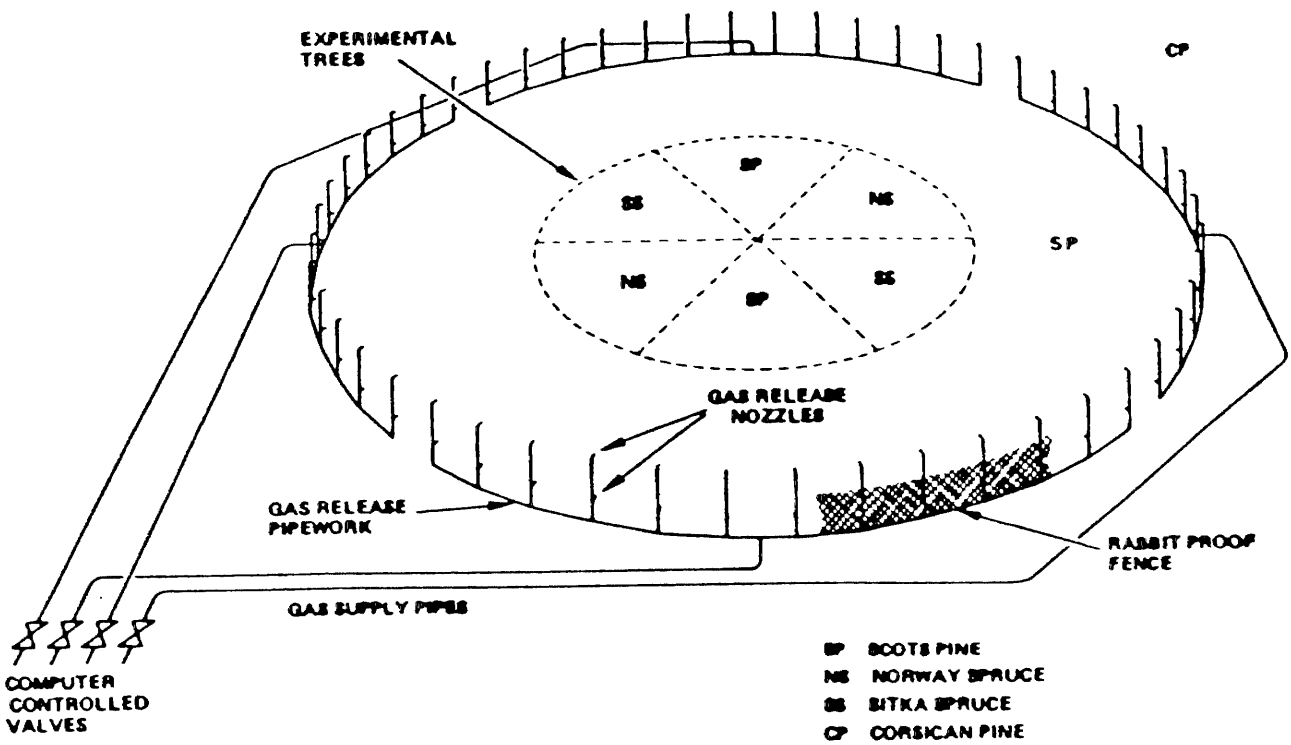

Figure 5. View of the gas source pipework and layout of a single fumigation plot. Figure taken from Hogsett et al. (1987).

and the plots time-share the gas analyzers. Each plot is sampled twice an hour. Therefore, an adjustment towards the target valve for each plot can only be made once every 30 minutes. Wind speeds vary at a much higher frequency, but the treatment levels cannot respond to these changes because of the tardiness of this system.

In Wageningen (The Netherlands) at the Research Institute for Plant Protection a field fumigation system has been developed that resembles the systems employed in the UK (#1, Appendix B, Table 2). The designers, however, have made substantial improvements with respect to response time to the target levels and the frequency of monitoring information.

The system consists of a circular array of pipelines of approximately 30 m diameter divided into 16 segments. An upper and a lower manifold 1.5 m apart are interconnected with pipes at 1 m intervals. The interconnecting pipes are equipped with 3 mm holes, one in the center and two approximately at the ends. All material used is stainless steel. SO_2 is injected into a dry air stream provided by a compressor. A feedback system, as used in the UK, uses stored and measured target levels of SO_2 to provide voltage signals to a mass flow controller to control quantity of SO_2 injected. SO_2 is measured in the center of the field to provide information for the feedback system. It is also measured at five additional levels to determine the distribution over the sample site. Because of the tardiness of the SO_2 monitor, fumigation adjustment is slow and can be made only once every 20 minutes. Since wind speed is the major factor causing variability of the SO_2 levels, feedback from a wind speed aerometer is used to control the SO_2 injection rate with a mass flow capacitor. Wind speed data are available at every moment and therefore adjustments can be worked up to twice a minute. This makes this system much more responsive than other systems presently in use. Testing of this system showed that the deviation of the concentration at a certain set point in the center of the field was about 15%. The distribution across the sample area showed a deviation of approximately 20%. At wind speeds lower than 1 m/sec, the SO_2 then is shut off to avoid build-up of excessive concentrations at the dispensing pipes.

In areas which have high concentrations of ambient air pollutants (such as the Los Angeles basin), the parallel plastic ducting can be used to exclude ambient and expose plants to added air pollutants. These

provide an inexpensive, well controlled system for pollutant exposures. This simple, easily constructed air exclusion system for use in fields of row crops was utilized originally by workers at the Tennessee Valley Authority Research Station, Muscle Shoals, Alabama (#5, Appendix B, Table B-2). This consists of parallel perforated plastic ducts installed between crop rows and inflated by blowers equipped with activated charcoal or other type of filters which remove ambient air pollutants. Whatever pollutant that is to be tested is added to the turbulent air stream issuing from the blowers and is blown over the test crop. Twenty or more plants can be tested per row thus providing good replication. If either multiple dosages or mixtures are desired, the additional gases can be added to the air stream in the ducts.

A two-season study (Thompson and Olszyk, 1985; Olszyk et al., 1986c) of several configurations of ducting, rates of air flow, and air exclusion at various heights showed that air flows within ducts had to be 57 m/min and air velocity through the plant canopy to be 30-108 m/min (#15, Appendix B, Table B-2). Three series of holes, one directed downward at 45°, a second, horizontal, and third at 45° upward bathed the plant canopy with the desired atmosphere. Ambient air exclusion was above 90% at ground level and decreased to 50-70% at 0.25 m with ducting of 0.25 m diameter. The wind speeds created by this system are higher than the 25 m/min shown by Ashenden and Mansfield (1977) to overcome boundary layer of ryegrass and thus allow access of SO_2 to the leaf.

This system provided air exclusion equal to that in open-top chambers, no interference with sunlight, and no temperature or humidity build-up. The major cost was the blowers, which must provide enough pressure to keep the ducts well inflated. The system was best installed in crops which are grown perpendicular to prevailing wind as windstorms can disrupt the operation unless the ducting is well anchored to the soil.

Branch Chambers. The use of branch or leaf chambers, or cuvettes to assess effects of air pollutants has been used on many plants, but on a small scale have been used principally in the field on trees as an alternative to whole plant chambers (Appendix B, Table 3). These devices have many of the same problems as any closed chamber, i.e., reduced light, heat build-up, and increased humidity. However, thermonic cooling of the chamber bottom or refrigerating the incoming airstream plus supplementary

light can mitigate these problems. Replicated measurements are needed to establish the statistical validity of a particular branch or group of test leaves. Some devices are readily portable and can measure effects of given pollutants on carbon allocation, including photosynthesis and respiration, and many determinations can be made in a short time to provide measurements which can establish statistical validity of measurements.

The recently developed branch chamber of Houpis et al., (1988) [#4, Appendix B, Table B-3], is reported to be so successful that 90 are being constructed for use on P. ponderosa in California. Materials cost is reported to be about $400 each plus 24 hrs required for fabrication. Performance tests showed that filters removed 84% of ozone at ambient levels of 100 ppb and photosynthetically active light was 92-98% efficient. Temperature rise was 2-4°C inside vs. ambient with 1-2°C caused by the mechanical equivalent of heat of the fans, plus 1-2°C caused by irradiation. The chambers are suspended by light scaffolding wherever measurements are desired (Figure 6).

Comparison of Systems. Three types of systems were chosen for detailed evaluation and comparison regarding their usefulness for determining the effects of air pollutants on trees. The large open-top chamber designed by Heagle et al., (1989) [#36, Appendix B, Table B-2] was selected as a desirable whole plant chamber because: (a) it is of large enough size for use with small sappling trees and not just seedling trees, (b) it's exposure characteristics and environmental modification have been documented, and (c) it is a larger version of the standard open-top chamber used in many studies during the last 15 years and whose strengths and weaknesses are well known. This chamber is very similar to the large chamber recently developed by Mandl et al., (1989) at the Boyce Thompson Institute. However, the Boyce Thompson chamber is basically a modification of a design developed for grapevines and not sapling trees. Most of the strengths and weaknesses of these two types of chambers would be the same.

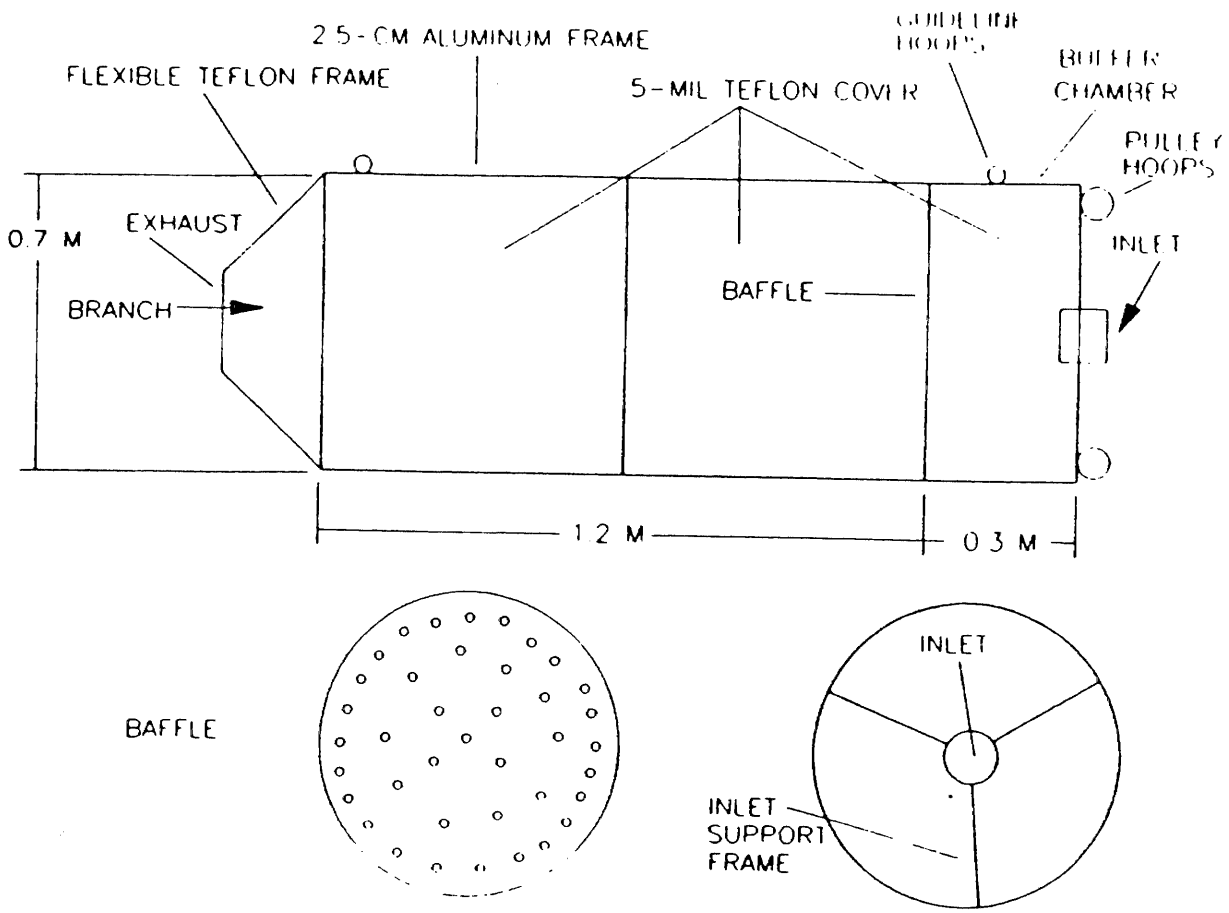

Figure 6. Branch exposure chamber design with dimensions from Koupis et al. (1988).

The open-air exposure system developed at Liphook, England (McLeod and Baker 1988) [#17, Appendix B, Table B-2] was selected as a desirable whole plant system because of its demonstrated usefulness with large numbers of tree saplings. Similar systems were developed on a much smaller basis by Dr. Lance Evans and group at Brookhaven National Laboratory in New York and Dr. Posthumus and group at Wageningen in the Netherlands. However, those systems have not been tested with trees or replicated to same extent as the Liphook system.

The branch chamber system developed at Lawrence Livermore Laboratory (Houpis et al., 1988) [#4, Appendix B, Table B-3] was selected as a desirable branch chamber. It has been very thoroughly tested even though chambers are only now being placed in the field on a large scale. Other chambers recently developed at the University of Georgia and University of Pennsylvania do not have both the size and environmental control built into the the Livermore chamber. The chambers developed in Georgia are much simpler in design, being essentially vinyl ducts placed over branches. The chambers developed in Pennsylvania are much more sophisticated in terms of microenvironmental control, but are much smaller and were designed primarily to exclude fog and gases from sections of spruce branches.

General strengths and weaknesses of the three test systems are described in Table 5. Large open-top chambers have strengths essentially steming from their past use in many air pollution studies with herbaceous plants and tree seedlings. Their major weaknesses are related to their construction and lack of usefulness for larger trees. Large open-air release systems have strengths based on their totally natural type of pollutant exposure without any confounding system effects. However, ozone exposures are still difficult with these systems and they have not been designed for larger trees. Branch chambers are the only system which currently could be used with large, mature trees.

The large chambers had somewhat greater environmental modifications than smaller, standard size open-top chambers (Heagle et al. 1989). Daytime temperature increases within the chambers vs. outside air tended to be slightly greater in large compared to small open-top chambers. Light intensity was reduced by approximately 15% in large chambers compared to outside which neared the maximum reduction in small chambers. However,

this light reduction was determined for chambers covered by clear plastic, thus, the reduction in light would be much larger as the trees grow and plastic ages.

General components which contribute to the cost of the three test systems are described in Table 6. These costs are tentative and would likely be modified for any specific proposal. However, they do give a good impression of the relative expense involved with construction of each type of system to accomplish the same objective: the determination of ozone effects on at least sapling trees. For the cost analysis it was assumed that there would be four ozone treatments for each study, including treatments whereby ozone would be generated from oxygen. The number of replicate units per treatment is based on the number of units used in similar studies. There were seven large open-top chambers per treatment for the orange tree study (Olszyk 1989). Only one gradient system may be required based on studies reviewed by McLeod and Baker (1988). A total of six branches and chambers per ozone treatment are being used by Houpis et al. (1988). Houpis et al. (1988) are actually subdividing each ozone treatment between two acidic precipitation treatments, however, for our analysis we are assuming that all six replicates in an ozone treatment are the same.

The cost analysis does not include ongoing maintenance and electricity expenses. These would vary considerably depending on size and location of the research site.

Finally, the above exposure system analysis assumed that a new facility would be constructed from scratch. A tree exposure system may be constructed more cheaply and rapidly if existing facilities were used. For example, the large chambers developed for Valencia orange trees at Riverside could be adapted for use with sappling trees up to approximately 2 m high. The system could be used essentially as is for tree species growing in oxidant polluted areas of the South Coast Air Basin. The chambers and blowers could also be used as is if they were to be moved to other areas of the state. However, this movement of the chambers would involve a great deal of disassembly and transportation which would only save part of the basic equipment hardware costs shown in Table 5 for large open-top chambers. In addition, there may be damage to the chambers if the pop rivets are removed which hold the rigid plastic panels of the

Table 5. Summary of performance characteristics for three types of exposure systems most useful for trees

Characteristic	Large Open-Top Chamber	Large Open-Air System	Branch Chamber
		Strengths	
Construction	Uses readily commercially prefabricated components.	Actual system is a simple array of PVC pipes. Has an unlimited variety of configurations. Simple to set up.	Can be fabricated by researchers themselves, provided enough time and equipment are available.
Maintenance	Easy to clean.	Minimal for PVC tubes themselves. Little danger of loss due to winds, rain, etc.	Whole units can readily be replaced if necessary. Small parts cheap to replace.
Environmental Conditions	Ambient conditions are uniform and environmental modification predictable across trees.	Totally ambient conditions, including pollutant dispersion in canopy. Can be used year-round.	Similar to ambient. Air dispersion like ambient, i.e. from outside to inside of branch.
Plant Material	Useful for whole stappling trees up to 3 m high.	Theoretically unlimited in size for whole mature trees or parts of trees based on configuration.	Useful for mature trees. Can select type of branch, i.e. fruiting vs. vegetative.
Experimental Design	Whole trees are experimental units.	Establishes gradient of concentrations for regressing analysis and response functions.	Can replicate treatements on the same tree.
		Weaknesses	
Construction	Assembly requires many people. Large ground clearing and preparation required.	Ozonator problems. Must supply adequate oxygen or clean NO_x out of airstream.	Tedious hand assembly per unit. Needs elaborate gye wire and scaffolding system for stabilization

continued

Table 5 (continued) - 2

Maintenance	Highest electrical cost. Needs constant attention to blowers, chamber cleaning, etc.	Constant care for ozonator, and large scale air monitoring system.	Many small parts that must be maintained
Environmental Conditions	Large reductions in light intensity over time. Requires removal in non-growing season months. Confounding spring and fall factors. Must provide artificial rain, constant rather than variable conditions.	Unless ozonator controlled, possible NO_x-weather interactions. Needs pollutant free background environment.	Constant rather than variable conditions.
Plant Material	Not mature trees.	The higher the tree, the fewer the number of trees that can be used.	Between branch movement of carbon would confuse results. To date only used with lower branches.
Experimental Design	Screen treatment likely not adequate for forest trees.	It may be difficult to get a large enough array of ozone concentrations to provide an adequate gradient. It would be very difficult to compare results from specific trees	Many more than six replicates per treatment would likely be required if branch to branch variability was high.

Table 6. Summary of construction costs for three types of exposure systems most useful for trees

Item	Large Open-Top Chamber	Large Open-Air System	Branch Chamber
1. Cost Per Unit	$6,000[a]	$20,000	$400
2. Number of Trees/Unit	1	28	1/3 (3/tree)
3. Number of Units/Treatment	7	1	6
4. Number of Treatments/Study[b]	4	Gradient	4
5. Number of Units/Study	28	1	24
6. Cost of Units	$148,000	$12,000	$9,600
7. Ozonator Cost	$10,000	$81,000 ($O_2$)	$10,000
8. Ozone Analyzers Required	3	4	3
9. Cost of Ozone Analyzers	$16,695	$22,260	$16,695
10. Cost of Computer System	$5,000	$5,000	$5,000
11. Construction Time/Unit	2 days[c]	7 days[d]	3-4 days[e]
12. Persons/day	4	4	2
13. Total Person/ Days/ System	208	28	198

[a]Average cost of $4,000-$5,000 for nonfiltered and $6,700-$7,700 for charcoal filtered.
[b]Charcoal-filtered, half-filtered, nonfiltered, nonfiltered + ozone for large and branch chambers.
[c]Assuming metal, plastic, etc. fabricated under contract commercially.
[d]Assuming a simple system of PVC tubing was used.
[e]Assuming construction was custom made by hand.

domes in place. Thus, movement of the chambers from Riverside may not be a viable option.

However, for use with tree species from other areas of California at Riverside the orange tree chambers would have to be modified to remove the relatively high concentrations of NO_x which occur in this heavily urbanized area. These modifications would include: (a) expansion of the blower boxes, (b) addition of purafil prefilters to all chambers to remove NO, (c) addition of charcoal filters to all chambers to remove NO_2, (d) replacement of 3/4 hp motors by 1 hp motors to increase air flow into the chambers to offset increased friction due to the purafil filters. If the trees were initially small seedlings the lower opaque fiberglass panels of the chambers would have to be replaced with clear fiberglass panels or vinyl. The costs for the above for 24 chambers are approximately: blower boxes - $6,000, purafil filters - $34,000, charcoal-filters - $2,800, motors - $9,500, and fiberglass - $2,700. Thus, the total cost of the chamber modifications is approximately $55,000. In addition, components of the ozone dispensing and monitoring system would have to be modified depending on the ozone exposure needs for any particular study.

These modifications would increase the usefulness of the citrus chamber site for a variety of studies, but would prove to be most useful for exposure of sapling trees to ozone. The trees would have to be warm temperature acclimated species such as canyon live oak and Coulter pine. A primary advantage of using this chamber system for tree saplings would be easy access for repeated physiological, biochemical and growth measurements for studies which could indicate the mechanisms by which ozone effects larger trees.

Thus, in summary, all three types of systems may be used depending on the study in question. Large open-top field chambers approximately 4 m wide and 3 m high would be useful for small sapling trees. These chambers modify the environment but their operating characteristics are known. Much larger chambers exist but would not be feasible for field use on a large scale basis. A large scale open-air release system for similar sized trees could be constructed for approximately the same cost as a large scale chamber system. The system would have no extra environmental modifications but would have less rigorous control of pollutant exposures. A branch chamber would be the best choice for intensive

studies on physiological and growth process effects of ozone on trees. However, their field use has not been tested fully.

C. San Joaquin Valley Survey

The results from the survey are shown in Table 7. Definite ozone injury symptoms occurred at sites #3, #36, and #40 in Kern County and possibly site #38 in Tulare County. The sites southeast of Bakersfield (#3) and southeast of Fresno (#38) are located where the maximum effects of ozone would be expected to occur in the San Joaquin Valley. The lack of ozone injury in the area further to the northwest was as expected. The sites in Merced and Madera counties especially had the least injury, possibly due to later senescence associated with later maturation compared to southern fields, but lower ambient ozone concentrations in this area may also have played a role. Ozone injury was difficult to determine at all sites due to the presence of other types of injury. This was especially true for the sites in western Kings County and southern Fresno County where caterpillar infestations caused considerable injury.

Further analysis of the results of the cotton study were carried out by plotting the occurrence of leaf injury at the sites across the San Joaquin Valley. Figure 7 indicates isopleths for different increments of upper leaf injury, and Figure 8 indicates isopleths for lower leaf injury.

A brief description of the results of the study was also prepared for mailing to participants in the study (Appendix C). The letter and injury data were mailed in February. The importance of any injury in different areas of the valley was deemphasized because of the many other possible causal factors for the injury in addition to ambient ozone.

Table 7. Leaf Injury to Cultivar SJ2 at Different Sites Observed for the San Joaquin Valley Cotton Survey[a]

Site Number	County	Leaf Injury (%) Upper	Leaf Injury (%) Lower	Comments
		Commercial Fields		
1	Kern	1 ± 3	10 ± 8	
2	Kern	19 ± 10	48 ± 19	Nitrogen deficiency
3	Kern	8 ± 3	43 ± 10	O_3 injury
4	Kern	5 ± 10	60 ± 18	
5	Tulare	10 ± 7	40 ± 8	
6	Tulare	6 ± 3	30 ± 8	Mildew
7	Tulare	3 ± 3	33 ± 22	
8	Tulare	4 ± 3	40 ± 8	Nutrient stress
9	Tulare	5 ± 0	30 ± 8	
10	Tulare	6 ± 3	50 ± 8	Some purple color
11	Kings	6 ± 3	29 ± 3	Slight O_3 stipple
12	Tulare	64 ± 33	75 ± 20	Lodging
13	Kings	15 ± 6	55 ± 6	Top bronzing
14	Kings	11 ± 6	40 ± 18	Top bronzing, dust
15	Kings	3 ± 3	25 ± 6	Dust, wilting
16	Fresno	30 ± 14	58 ± 10	
17	Fresno	50 ± 22	63 ± 25	Severe caterpillars
18	Fresno	53 ± 13	54 ± 19	Severe caterpillars
19	Fresno	9 ± 3	40 ± 12	Beginning to dry
20	Fresno	27 ± 17	90 ± 8	Drying, past caterpillar injury
21	Fresno	30 ± 7	88 ± 15	
22	Fresno	5 ± 4	33 ± 13	
23	Fresno	13 ± 12	30 ± 8	
24	Fresno	8 ± 3	53 ± 22	A few caterpillars
25	Fresno	4 ± 5	23 ± 10	Rank
26	Fresno	5 ± 4	58 ± 13	
27	Fresno	33 ± 5	68 ± 5	
28	Madera	5 ± 6	18 ± 5	Aphids
29	Madera	3 ± 5	8 ± 5	Aphids
30	Madera	0 ± 0	15 ± 6	Nitrogen deficiency
		Variety Trials		
31	Madera	0 ± 0	3 ± 5	
32	Madera	0 ± 0	8 ± 5	Wilt
33	Madera	0 ± 0	15 ± 6	
34	Merced	3 ± 5	13 ± 10	Some wilt
35	Merced	3 ± 5	13 ± 5	Scattered wilt

(continued)

Table 7 (continued) - 2

Site Number	County	Leaf Injury (%) Upper	Leaf Injury (%) Lower	Comments
		Chamber Study - Ambient Plots[b]		
36	Kern	37 ± 36	66 ± 35	O_3 injury
37	Kings	61 ± 18	64 ± 15	Injury not O_3 related.
38	Fresno	29 ± 11	45 ± 11	
39	Tulare	24 ± 5	93 ± 9	
40	Kern	38 ± 10	100 ± 0	
41	Kern	0 ± 0	35 ± 13	
42	Tulare	35 ± 13	98 ± 5	
43	Kings	35 ± 6	35 ± 15	
44	Kings	35 ± 6	83 ± 5	
45	Fresno	25 ± 6	53 ± 10	
46	Merced	40 ± 14	58 ± 5	
47	Madera	8 ± 5	20 ± 0	
48	Fresno			Too much wilt to rate

[a]Mean ± standard deviation for four observations.
[b]Mean ± standard deviation for eight observations.

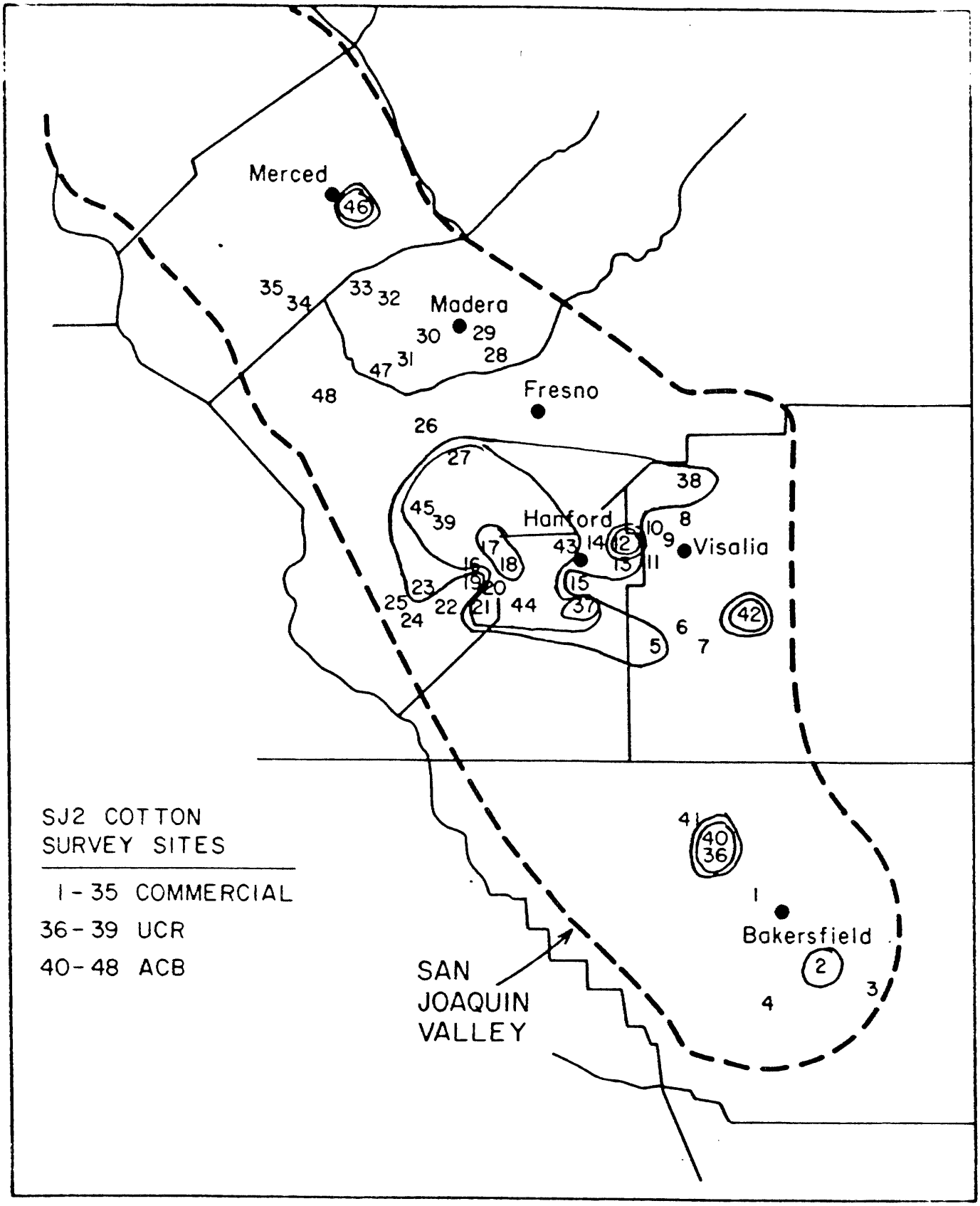

Figure 7. Isopleths of upper leaf injury to SJ2 cotton in the San Joaquin Valley. UCR indicates UC Riverside-sponsored sites. ACB indicates Acada Cotton Board-sponsored sites. In increments of <10, 10-25, 25-50, and >50% of leaf surface area injured.

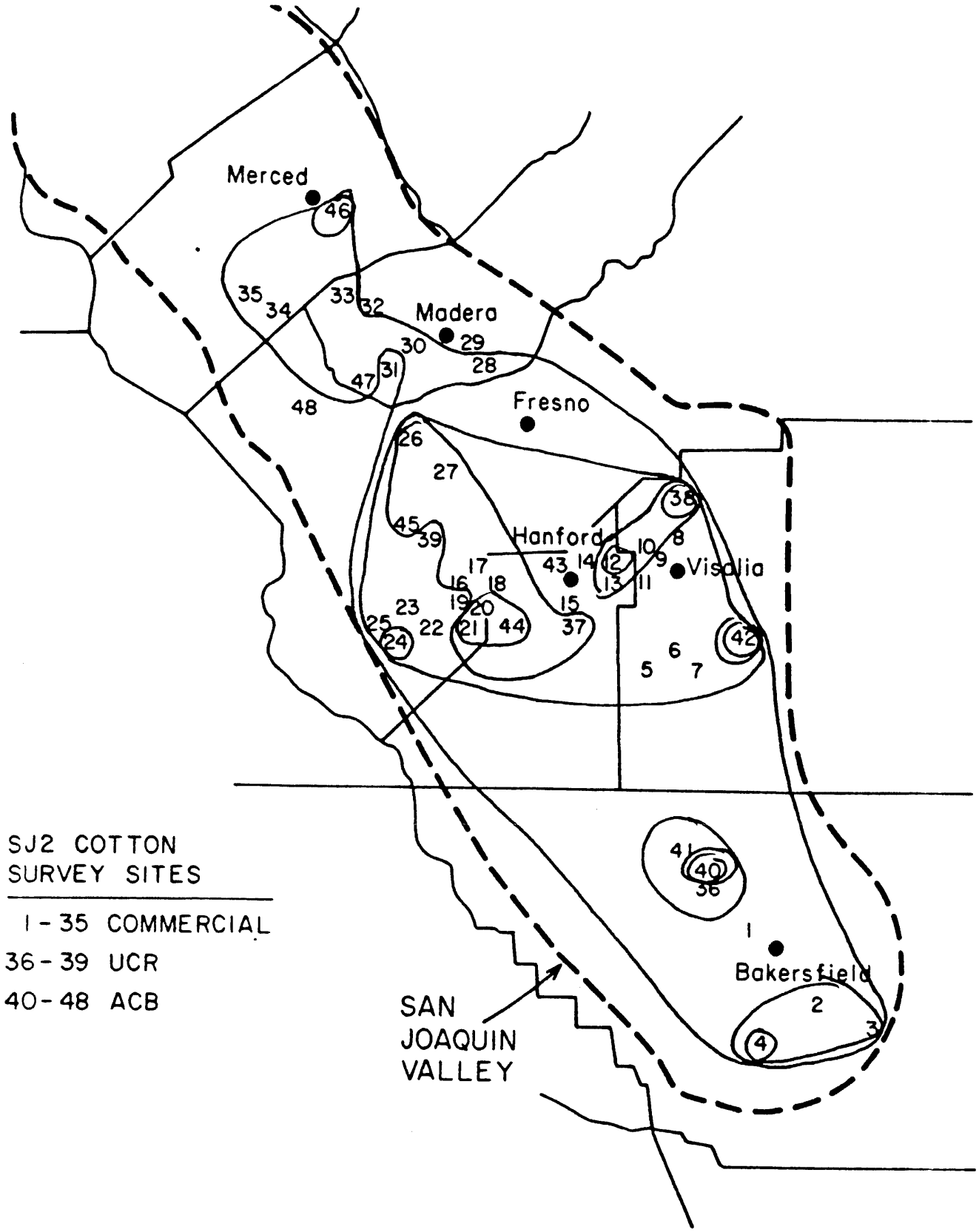

Figure 8. Isopleths of lower leaf injury to SJ2 cotton in the San Joaquin Valley. UCR indicates UC Riverside-sponsored sites. ACB indicates Acada Cotton Board-sponsored sites. In increments of <10, 10-25, 25-50, 50-74 and ≥ 75% of leaf surface area injured.

D. San Joaquin Valley Assessment

The crops most affected by the east-west subdivision were those with substantial acreages on the west sides of Fresno and Kings counties. For these crops, ozone concentrations were estimated to be lower on the west than on the east sides of the counties. Estimated losses for five of the most important crops in California were cut substantially with the west-east division for those counties (Table 8). Losses for cotton decreased by 30% and losses for grapes decreased by 25%. Estimated losses for onions, another ozone sensitive crop, decreased by 87%. Estimated losses for processing tomatoes were decreased by approximately 66%, and fresh tomatoes by 59%.

Figures 9-11 illustrate the range of estimated yield losses for three major crops across the San Joaquin Valley, using the east-west subdivision for Fresno and Kings counties. Losses for alfalfa (Figure 9) ranged from 3-15%, with the lowest losses in the north and western parts of the county. The gradient of losses across the valley due to differences in ozone concentrations is best seen when comparing the 4% loss on the west side of Kings county (west valley), to the 9% loss in the east side of Kings county (middle valley), to the 15% loss in Tulare county (east valley). The losses for alfalfa represent the average loss across all cuttings from February through at least October. The losses would be higher in mid-summer months and lower early and late in the season.

Figure 10 illustrates the range of losses for cotton, from 6-7% on the west sides of Fresno and Kings counties to 24% in Tulare county. The blank areas for Stanislaus and San Joaquin counties indicated that no cotton was grown. Figure 11 illustrates the range of losses for grapes, from 9% on the west sides of Fresno and Kings counties to 32% in Tulare county.

The results from this east-west subdivision of the San Joaquin Valley are a much better estimate of true yield losses than the previous estimates based on solely east side data. This is primarily because of Fresno county has by far the most agricultural production in the Valley. Yields are also likely to be somewhat lower than projected on the far west sides of Stanislaus and Merced county and in southern Tulare county, because of the development pattern but there are no ozone data available to even semi-quantify the losses.

Table 8. Estimated Losses in 1986 to Selected Crops in San Joaquin Valley[a]

Crop	County	East		West	
		Tons	% Loss	Tons	% Loss
Cotton	Fresno	48,207	20.6	167,001	9.9
	Kings	41,750	14.1	80,235	5.5
Grapes, All	Fresno	1,879,020	26.3	50,175	13.9
	Kings	25,329	24.7	3,751	11.8
Onions, All	Fresno	6,875	1.5	195,325	0.7
	Kings	761	1.0	9,385	0.7
Oranges	Fresno	227,402	12.3	3,698	6.4
Tomatoes, Processing	Fresno	18,315	8.8	2,016,685	1.9
	Kings	3,002	3.2	37,021	0.6

[a]Ambient O_3 in 1986 growing season vs. 2.50 pphm growing season average for 12 hours, or 2.72 pphm for 7 hours

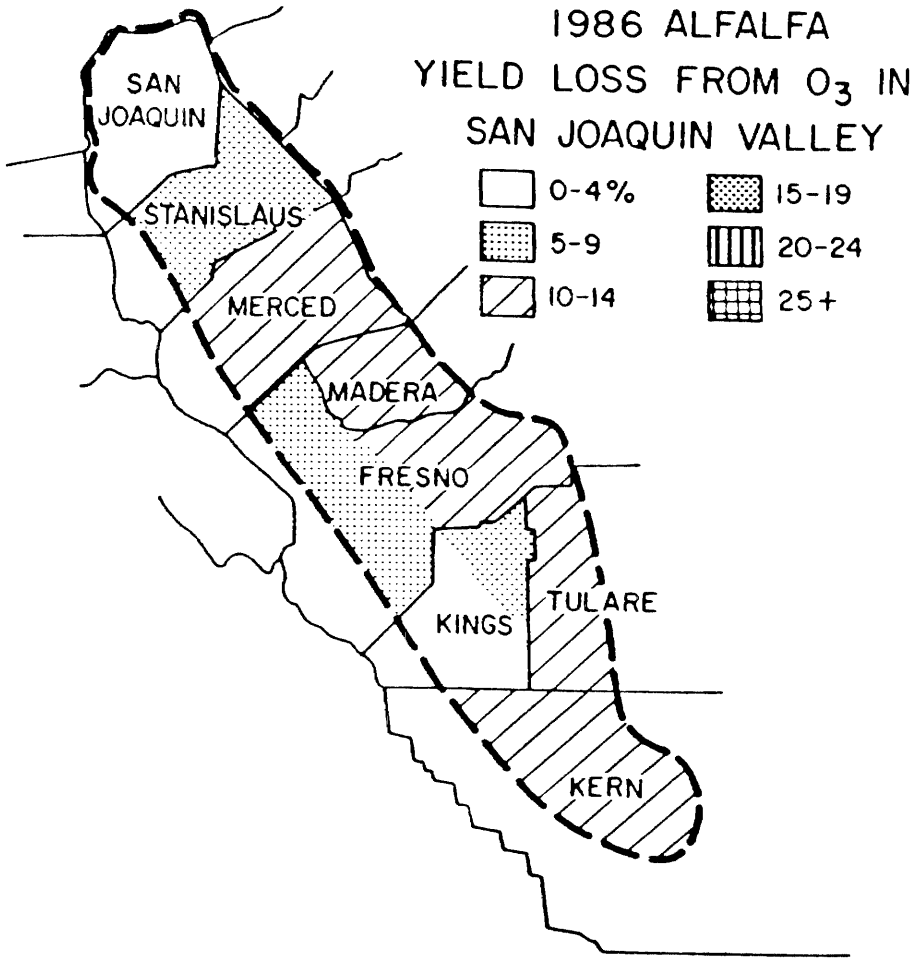

Figure 9. Estimated yield losses for alfalfa from ozone in San Joaquin Valley in 1986.

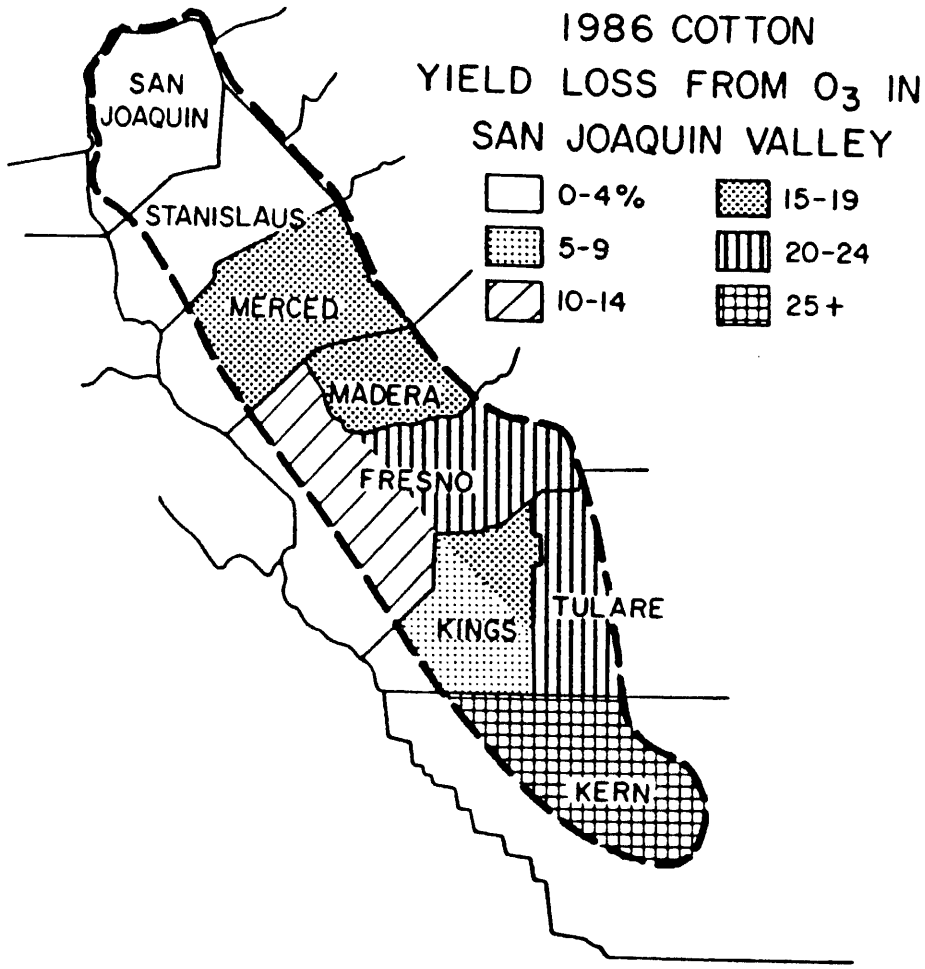

Figure 10. Estimated yield losses for cotton from ozone in San Joaquin Valley in 1986.

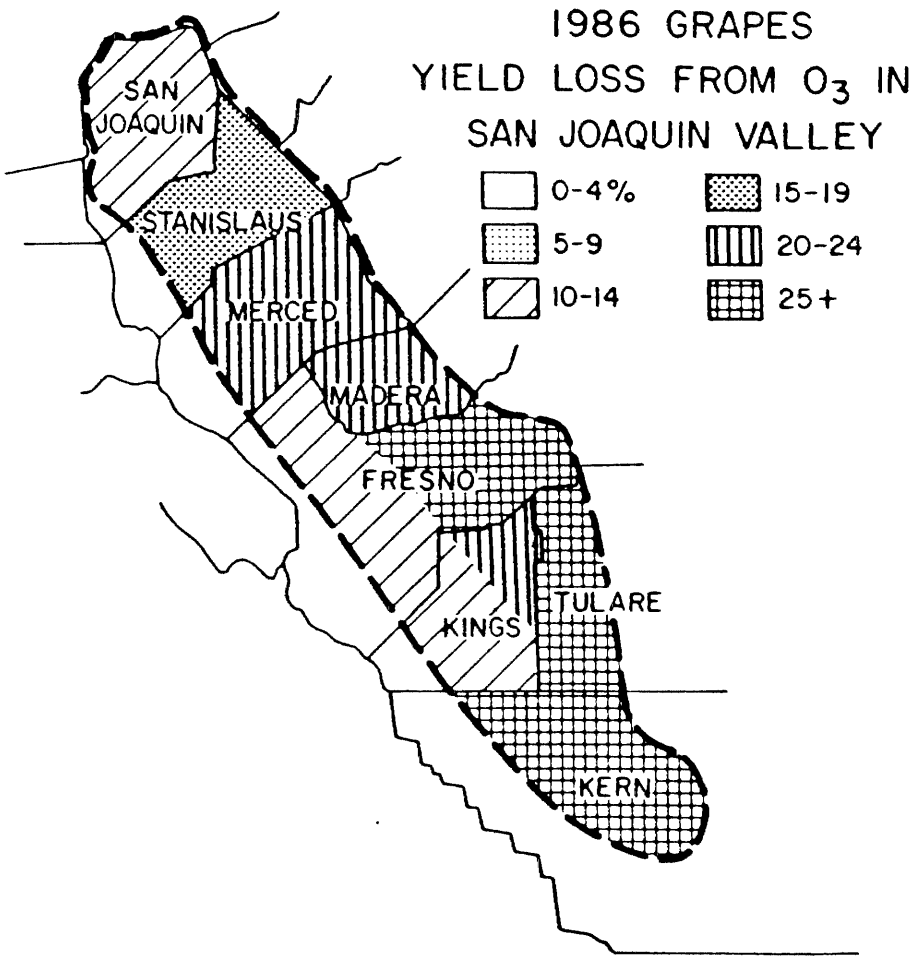

Figure 11. Estimated yield losses for grapes from ozone in San Joaquin Valley in 1986.

E. 1986 Statewide Assessment

A statewide assessment of crop yield losses due to ambient ozone in 1986 was prepared as shown in Table 9. For the "whole county" estimates, only the eastside air monitoring data were used for Fresno and Kings counties. For the "E-W" division, lower ozone concentrations were used for crop production on the west than on the east sides of Fresno and Kings counties based on past air monitoring data for Five Points (west side) vs. the Fresno area (east side).

Compared to potential yields in "clean air", ozone was estimated to have produce large yield losses (>15%) for six crops including cotton, grapes, dry beans, and three types of melons (Table 9). The losses for cotton, grapes, and dry beans were similar to those found in preceding years.

The losses for melons should be considered as tentative because the ozone exposure-yield loss equation was based on less certain information than the equations for the other crops. This is because the only available ozone data consisted of average diurnal curves for concentrations, the crops were grown under the humid summer conditions of southern Indiana and not dry summer conditions of California, and the cultivar of muskmelons used in Indiana was not the same as those grown in California (Snyder et al. 1988). Nevertheless, muskmelon in Indiana is the same botanical variety of Cucumis melo as what are known as cantaloupes in California. Furthermore, muskmelons are the same species as honeydew melons but are a different species than watermelons. Recent research in Indiana has indicated that watermelons are even more susceptible to ozone than muskemelons. Thus, it seemed reasonable to use the muskmelon equation for watermelons.

Moderate losses were calculated for seven crops (6-10%), alfalfa hay and seed, sweet corn, lemons, oranges, potatoes, and spinach (Table 9). The losses for alfalfa, sweet corn, and spinach were similar to those in preceding years. This was the first year that losses could be estimated for potatoes. The equation was based on research with cultivars and under conditions typical for Pennsylvania and not California (Pell et al. 1988). However, the estimated loss appears to be reasonable as past studies in California indicated that potato cultivars grown here are also susceptible to ozone (Foster et al. 1983).

Table 9. Estimated crop yield losses from ambient ozone across California in 1986.[a]

County	Whole County	East-West Subdivision[b]
	% Loss	
Alfalfa-Hay	9.1	8.9
Alfalfa-Seed[c]	11.1	8.2
Barley-All	0	0
Beans-Dry[d]	21.1	20.4
Broccoli	0	0
Cantaloupes[e]	26.7	26.1
Celery	0	0
Corn-Field	1.9	1.8
Corn-Sweet	6.2	6.2
Cotton	19.1	15.4
Grain Sorghum	1.1	1.1
Grapes	23.8	23.6
Honeydew Melons[e]	26.2	23.1
Lemons[f]	7.8	7.8
Lettuce	0	0
Onions	1.3	1.0
Oranges[f]	9.4	9.4
Potatoes	9.8	9.8
Rice	2.6	2.5
Silage-Corn	2.3	2.2
Spinach	6.1	6.1
Strawberries	0	0
Sugar Beets	0	0
Tomatoes-Fresh	1.7	0.5[g]
Tomatoes-Processing	3.7	1.5
Watermelons[e]	36.5	35.9
Wheat	0.8	0.6

[a]Uses only one ozone value for an entire county, which may be the average for several sites where a crop is grown; but not weighed for amount of crop near each site.
[b]Uses different ozone concentrations for east vs. west sides of Fresno and Kings counties in San Joaquin Valley.
[c]Uses Temple et al., (1987) equation for alfalfa hay.
[d]Averaged across results for four bean cultivars.
[e]Equation based on muskmelon data from Snyder et al., (1988).
[f]Assumes half of orchards are having an "on" year, half an "off" year in terms of productivity.
[g]Assumed no values greater than 10 pphm and, therefore, no loss on west sides of Fresno and Kings Counties.

Losses for lemons and oranges in 1986 were approximately one-half of the estimated losses in preceding years. This was due to the new assumption that citrus trees only exhibit yield losses from ozone during "on" production years. Since it was not possible to determine what percentage of orange production could be considered to be from "on" vs. "off" trees, we assumed that orange production was equal from "on" vs. "off" trees in 1986. Thus, the estimated yield loss for oranges is likely an underestimate of the real yield loss occurring in 1986. This is because even if equal numbers of trees were in "on" vs. "off" production mode, the tonnage would have been expected to be relatively higher from the "on" trees. Thus, more than 50% of the tonnage would have been affected by ozone.

Slight losses for eight crops (1-3%), field corn, grain sorghum, onions, rice, corn silage, fresh market and processing tomatoes, and wheat (Table 9). These estimated losses were about the same as in preceding years for all crops except onions. Onions had previously been estimated to have losses of greater than 20%. However, a green onion equation had to be used in the calculations, whereas new evidence from dry onions indicated that they were essentially resistant to ozone (P. Temple, 1988 personal communication).

There were no losses for six crops: barley, broccoli, celery, lettuce, strawberries and sugar beets (Table 9). Part of the lack of ozone effect could be attributed to the low ambient ozone concentrations during their growing seasons. However, even when grown during the summer, crops such as sugar beets have been found to be very ozone resistant. Lettuce does not show yield losses in terms of weight when exposed to ozone. However, quality effects could occur if leaves are injured by ozone. These quality effects are not considered by the crop loss assessment procedure currently being used.

No data were available for approximately 24 crops in the ARB database, primarily tree fruit and nut species. Some of these crops such as almonds are known to have ozone injury symptoms, however, there is no information as to ozone effects on their yield.

The revised crop loss from ozone estimates, including the east-west division of the San Joaquin Valley, should be considered to be more accurate than the estimates using the Fresno and Hanford data for all of

Fresno and Kings counties, respectively. However, the many assumptions that went into the east vs. west side calculations leave some room for doubt, and the ozone concentration and hence losses on the west side of the San Joaquin Valley could have increased since the late 1970's and early 1980's when ozone was last monitored at Five Points.

The dramatic effect of cultivar on estimated yield losses from ozone was shown in Table 10 [based on cultivar response data from P. Temple (1989)]. There was considerable variability in response to ozone for the different cultivars, as expected from past studies. For two species, broccoli and lettuce, there was no yield loss with any cultivar. This was expected for lettuce based on previous open-top field chamber work in the San Joaquin Valley (Temple et al., 1987). No data had been published previously for broccoli.

Three of the four bean cultivars produced large yield losses, as expected by the research in New York State (Kohut and Laurence 1983). The fourth bean cultivar showed no yield loss. The average loss for the four cultivars was used for estimating statewide losses instead of the equation used previously as that equation was based research in New York State using a different cultivar. However, the average of the four California cultivars resulted in a similar statewide loss of over 20%, or very similar to that found when the New York equation was used (22%).

Only one of the four onion cultivars showed any yield loss. The loss for this cultivar, "Rio Bravo" was much less than the loss estimated previously using an equation based on research with green onions. The average loss for the four onion cutivars was used for estimating statewide losses as the data are more representative for the types of onions in the crop data base.

Results for cotton indicated that SJ2 seemed to be more resistant to ozone than the other three cultivars (Table 10), and was more resistant than indicated in the previous field studies in the San Joaquin Valley. The 5.3% estimated using results from Riverside was only one-third the 14.7% estimated based on results from Shafter (Temple et al., 1985c) or the 13.6% estimated based on results from Parlier (Brewer 1985). The Temple et al., (1985c) equation was still used for the statewide assessment for several reasons: (1) the study at Shafter in the San Joaquin Valley was conducted in the environment where most of the cotton is grown

Table 10. Estimated losses for different crop cultivars in 1986[a]

Crop	Cultivar-	% Yield Loss		
Beans-Dry	Linden Red Kidney	0	Sal Small White	19.8
	Sutter Pink	30.4	Yolano Pinks	31.3
Broccoli	Green Duke	0	Commander	0
	Green Belt	0	Emperor	0
Cotton	C1	41.3	SJ2	5.3
	GC 510	43.3	SS2086	21.1
Lettuce	Dark Green	0	Prizehead	0
	Parris Island Cos	0	Royal Green	0
Onions	Colossal	0	Rio Bravo	4.0
	Nu-Mex	0	Rio Hondo	0
Tomatoes-Proc.	FM785	6.0	UC204C	17.7
	HYBRID31	13.1	E6203	15.8

[a]Using east-west data for Fresno and Kings counties and crop loss equations from Dr. P. J. Temple. Assumed all cultivars are found in each county where the crop is grown.

in California, (2) the study at Shafter had more ozone concentrations with which to calculate an ozone exposure-yield loss equation, and (3) the Riverside study started relatively late during the growing season which may have affected the response of cotton to ozone.

The environmental considerations (1) may be especially important for both climatic and ozone exposure reasons. In terms of climate, the conditions at Riverside for SJ2 may not have been appropriate for its successful growth and subsequent ozone susceptibility. In terms of ozone exposure, SJ2 may be more susceptible to the more chronic exposures typical of the valley (moderate ozone concentrations for many hours per day), than to the more acute exposures typical of Riverside (higher peak concentrations for a few hours per day), than the other cultivars. R. Brewer of Parlier (personal communication) had indicated that SJ2 was actually less susceptible to ozone than GC510 with ozone concentration above ambient in the San Joaquin Valley, i.e. the same sort of concentrations found in Riverside.

In any event the cotton study by Brewer indicated that the second leading cultivar which is increasing in importance in the valley, GC 510, is at high risk for injury from ozone. This risk is likely to increase in the future as more and more GC 510 is being grown especially on the east side of the San Joaquin Valley such as in Tulare county because of the presence of greater verticillium wilt potential in that area. The cultivar GC 510 is more resistant to the wilt than SJ2. Ozone concentrations are currently the highest on the east side of the valley and are likely to increase in that area with increased urbanization.

The cultivar data for processing tomatoes indicated greater losses from ambient ozone than estimated from past studies in the San Joaquin Valley. Three cultivars had losses of about 15% while one had a 6% loss (Table 10). These estimated statewide losses were much larger than the 1.3% loss estimated with an equation reported by Heck et al., (1984b), based on the study conducted by Temple et al., (1985a). The Temple et al., (1985a) work was conducted at Livermore in the San Joaquin Valley and represented climatic and environmental conditions more typical for the tomato growing conditions in the state than would work conducted at Riverside. Thus, the results from the Temple et al., (1985a) study were used for the statewide assessment. However, we recognize that the tomato study at Livermore was conducted using the cultivar 'Murrieta', and, thus, the differences between the Livermore and Riverside experiments may be solely due to use of different cultivars in the studies.

F. Future Loss Projections

Results from the analysis of future crop losses in the Central Valley from ozone are shown in Table 11. Losses were calculated using ambient data for 1986, the modified rollback to 9 pphm scenario, and increased or "rollup" ozone concentrations predicted for 2010. Losses were also calculated for ozone concentrations predicted for 1995, however, the data are not presented as the yield reductions were essentially the same as for 1986. This was due to the projected change of less than 0.5% in ozone concentrations based on estimated NO_x emissions in the valley for 1995.

Estimated yield losses due to ozone exposure with the 9 pphm rollback scenario were reduced by one-fourth to two-thirds for most crops (Table 12). Losses were reduced by only 11 and 18% for lemons and sweet corn, respectively. For two crops, spinach and fresh market tomatoes, no losses would be expected with the rollback. Despite the impact of the rollback on yield losses compared to 1986, many crops still had large (>10%) losses on an absolute basis (Table 11). Yield losses still occured with the rollback because ozone concentrations between "background" (2.5 pphm for 12 hour equations) and 9 pphm were still assumed to affect crop yield.

The predicted crop yield losses from ozone in 2010 generally increased by only a few percentage points over 1986 on an absolute basis (Table 11). On a relative basis, losses increased by 8-14% for most crops over 1986 (Table 12). Losses were increased most for corn silage, field corn, oranges, potatoes, tomatoes (fresh and processing), and dryland wheat. However, only the losses for oranges and potatoes would be large enough to have a significant impact on crop productivity. For the other crops, the estimated absolute yield losses from ozone would still be less than or equal to 5% in 2010.

Table 11. Estimated crop yield losses in the Central Valley from ambient ozone in 1986 and 2010, and assuming a rollback to the air quality standard for ozone of 9 pphm.

Crop	1986 Ambient	Rollback to 9 pphm	2010 Rollup
	% Yield Loss vs. "Clean" Air[a]		
Alfalfa Hay	10.6	6.7	11.5
Alfalfa Seed	8.5	4.6	9.2
Barley	0	0	0
Beans-Dry	20.9	13.4	22.9
Broccoli	0	0	0
Cantaloupes	33.5	19.2	36.2
Corn-Field	1.7	0.8	2.1
Corn-Sweet	2.0	1.7	2.1
Cotton	15.7	8.6	17.5
Gran Sorghum	1.0	0.5	1.3
Grapes-Raisin	26.5	15.6	28.7
Grapes-Table	25.3	15.9	27.6
Grapes-Wine	22.5	14.1	24.4
Honeydew Melons	21.3	16.0	23.3
Lemons	9.4	7.4	10.4
Lettuce	0	0	0
Onions-dry dehydrated	1.0	0.5	1.1
Onions-dry fresh	0.9	0.5	1.0
Oranges	9.3	4.8	11.9
Potatoes	10.6	7.1	11.4
Rice	2.5	1.9	2.8
Silage-Corn	2.1	0.9	2.5
Spinach	0.4	0	0.5
Strawberries	0	0	0
Sugar Beets	0	0	0
Tomatoes-Fresh	2.4	0	5.3
Tomatoes-Processed	1.6	0.7	2.0
Watermelons	35.6	22.1	37.6
Wheat	0.7	0.4	0.8
Wheat-Dryland	0.3	0.2	0.4
Wheat-Irrigated	0.8	0.5	0.9

[a]"Clean" air assumes a 12 hour (0800-2000) growing season ozone concentrate of 2.5 pphm.

Table 12. Percentage change in yield losses in the Central Valley vs. 1986 with ozone concentration rollback to 9 pphm and rollup to estimated 2010 levels.

Crop	Change in Estimated Losses vs. 1986(%)	
	9 pphm Rollback	2010 Rollup
Alfalfa Hay	-38	+9
Alfalfa Seed	-46	+8
Barley	0	0
Beans-Dry	-56	+10
Broccoli	0	0
Cantaloupes	-43	+8
Corn-Field	-59	+24
Corn-Sweet	-18	+5
Cotton	-45	+12
Grain Sorghum	-50	+30
Grapes-Raisin	-41	+8
Grapes-Table	-37	+9
Grapes-Wine	-37	+8
Honeydew Melons	-25	+9
Lemons	-11	+11
Lettuce	0	0
Onions-Dry Dehydrated	-50	+10
Onions-Dry Fresh	-44	+11
Oranges	-48	+28
Potatoes	-33	+17
Rice	-24	+12
Silage-Corn	-57	+19
Spinach	-100	+20
Strawberries	0	0
Sugar Beets	0	0
Tomatoes-Fresh	-100	+121
Tomatoes-Processing	-63	+25
Watermelons	-38	+6
Wheat-General	-43	+14
Wheat-Dryland	-33	+25
Wheat-Irrigated	-38	+13

[a]Assuming estimated losses were vs. a 12- hour growing season ozone concentration of 2.5 pphm.

Therefore, the data indicated estimated yield losses would increase in 2010 vs. 1986 by slightly less than the projected increase in ozone due to changes in NO_x emissions in the valley over the next 24 years, i.e. 20%. However, because the most ozone susceptible crops such as melons, dry beans, cotton and grapes already had large losses due to 1986 ozone concentrations, the increased ozone in 2010 resulted in only slightly greater yield losses.

The 2010 rollup scenario highlighted the continuing controversy over the most accurate form for expressing ozone exposure in yield loss models, i.e. the relative importance of peak vs. mean concentrations. Twelve or seven-hour growing season average concentrations were used for nearly all crops as these continued to be the only forms available to characterize ozone exposures. These averages changed little with the 2010 vs. 1986 scenarios as illustrated for alfalfa in Table 13. This is likely because these averages include many values less than or equal to 4 pphm which were assumed to be unchanged in 2010 vs. 1986. These "background" ozone concentrations were considered to be unaffected by NO_x emission changes in the valley.

In contrast, the cumulative ozone dose greater than 10 pphm was predicted to increase dramatically in 2010 vs. 1986 (Table 13). Calculation of yield losses for the models which weighed peak values heavily resulted in a large increase in losses for 2010 vs. 1986. For example, the estimated losses for fresh tomatoes more than doubled between 1986 and 2010 (Table 11).

Table 13. Ozone exposures for alfalfa in selected counties in 1986 and 2010.[a]

County	1986 Ambient			2010 Estimated		
	>10 pphm[b]	7 hr Ave. (pphm)	12 hr Ave. (pphm)	>10 pphm[a]	7 hr Ave. (pphm)	12 hr Ave. (pphm)
Fresno East	313	6.3	5.8	616	6.6	6.0
Kern	204	6.5	5.9	431	6.9	6.2
Kings East	214	5.1	4.9	543	5.4	5.1
Tulare	252	7.2	6.4	663	7.7	6.8

[a]Alfalfa growing season considered to be February - October.
[b]Cumulative dose of hours x pphm for hourly averages greater than 10 pphm.

G. Data Base Update

The air quality, crop productivity, and loss modeling databases have all been updated. Ozone air quality data are now available for 1982 through 1986, and the data for 1987 have been requested from the ARB Aerometric Data Division. Crop productivity data are now available for 1958 through 1986. Summaries of data for 1987 have been ordered. However, there may be a problem with obtaining county data for 1987 in the future as the staff who collected and entered the data into a computer database at the University of California, Berkeley are not longer working on that project. Models have been collected for additional species and entered into a database. Hardcopies of reprints for all references described in the reference section of this report and Appendix B have been obtained and are available to ARB staff.

H. Project Review and Presentations

The information gathered as part of this project was made available to scientists, farm advisors, public officials, growers, and ARB staff through a variety of meetings and presentations (Table 14). In all cases the method of estimating crop losses was stressed and it was emphasized that the estimated losses were potential losses based on current information and assumptions including the assumption that no other factor was affecting crop yield besides ozone.

A project review meeting was held on September 12-13, 1988, at the Day's Inn Motel in Riverside. The meeting reviewed research activities since the June 1987 review meeting, and suggested research for the 1988-89 vegetation loss project and the general ARB research program. The meeting included research scientists from UCR and ARB staff. A list of attendees is shown in Table 15. A final agenda for the meeting is shown in Appendix F.

The meeting stressed three main areas: (1) research with ozone and tree fruit and nut crops, (2) research with forest tree species, and (3) preparation of reports for the ARB. The discussion of reports was useful because it resulted in a greater understanding between ARB staff and University scientists regarding the technical aspects of the reports. In the future ARB staff and researchers will meet to discuss information for reports before they are submitted to insure that the format is relevant to ARB needs. Particular emphasis will be on the language of the Executive Summaries and statistical analyses described in the reports.

Two peer-reviewed papers based on past crop loss research were published during this last contract period. The papers by Olszyk et al., 1988a,b described the process used to calculate crop losses from ambient ozone in California, estimated losses due to ambient ozone in 1984, and hypothesized losses in 1984 based on different ozone air quality standard scenarios.

A paper was prepared for presentation at the annual meeting of the Air and Waste Management Association (i.e. AWMA, formerly Air Pollution Control Association) in June, 1989, at Anaheim, California. The paper described and evaluated the databases available for determining of losses to crops and forests from ozone in California. The paper was invited by

Table 14. List of meetings and presentations giving information relative to vegetation loss assessments.

Dates	Meetings/Presentations
June 20-24, 1988	Air Pollution Control Association, Annual Meeting, Dallas, Texas, Attended sessions on crop loss assessment and air quality issues
September 12-13, 1988	Annual Crop Loss Workshop, Riverside, California, Hosted and chaired meeting
November 13, 1988	Chaired Workshop on Ozone Effects to Fruit and Nut Tree Crops (see Section III.A.)
November 27 - December 2, 1988	Agronomy Society, Annual Meeting, Anaheim, California, Presented results on San Joaquin Valley Cotton Study
April 5, 1989	Avocado Research Advisory Board, Annual Meeting, Riverside, California, Presented results of past avocado crop loss research
April 6, 1989	Citrus Research Advisory Board, Annual Meeting, Riverside, California, Presented results of orange crop loss research.
April 6, 1989	Presentation on Air Pollution Effects on "Crop Yield", at Air Pollution Workshop Bakersfield, California
April 10-13, 1989	Attended Annual Air Pollution Workshop, at Walnut Creek, California. Attended sessions and presented results from crop loss research with cotton and oranges
June 25-30, 1989	Air and Waste Management Association (formerly APCA), Annual Meeting, Anaheim California, Presentation on databases for crop and forest loss assessment.

Table 15. Attendees at 1988 Annual Crop Loss Assessment Workshop.

Name	Affiliation
A. Bytnerowicz	SARPC, UC Riverside
H. Cabrera	Air Resources Board, Sacramento
S. Champonier	Air Resources Board, Sacramento
T. de Jong	Dept. Pomology, U. California, Davis
P. McCool	SAPRC, UC Riverside
D. Olszyk	SAPRC, UC Riverside
M. Poe	SAPRC, UC Riverside
W. Retzlaff	Kearney Ag. Center, U. California
B. Takemoto	SAPRC, UC Riverside
O.C. Taylor	SAPRC, UC Riverside
P. Temple	SAPRC, UC Riverside
R. Thompson	SAPRC, UC Riverside
D. Westerdahl	SARPC, UC Riverside
L. Williams	Dept. Pomology, UC Davis
J. Wolf	SAPRC, UC Riverside

Dr. Walter Heck for a session discussing the adequacy of data for determining vegetation losses from ozone. A copy of the abstract of the paper is found in Appendix G. Preprints of the paper were available at the meeting and/or available from the AWMA.

I. Needed New Research

Even though progress continued to be made during 1988-89 in understanding losses to vegetation from air pollution in California, considerable new integrated research is still necessary. Three of the most important new areas are described below:

Forest Effects. While the assessment of ozone induced losses to crops has progressed well, work on assessing ozone losses to forests has not been emphasized to date. The exposure system evaluation from 1988 will provide valuable information for design of new studies. Work needs to be done to maximize the usefulness of currently available data to begin to assess ozone losses to forests. A definitive assessment cannot be made until the results are available from the large number of current forestry studies. However, groundwork and a preliminary assessment can be made for forests based on available ambient ozone data and current information focussing on the effects of ozone on Jeffrey pine (*Pinus jeffreyi*) and ponderosa pine (*P. ponderosa*), two of the most sensitive forest species in California.

Specifically, a comprehensive study is needed of the ozone database currently available to assess losses to forest tree species. This data base is necessary to indicate the patterns of pollutant exposures occurring at those sites on an hourly, monthly, seasonal, and yearly basis to assist in planning appropriate ozone exposures for controlled experiments. A determination is neccessary of the location and acreage or importance of ozone susceptible tree species in different areas of California. Occurrence of the species in relation to ozone air monitoring sites must be determined. A critical need also exists to determine what ozone exposure-tree response data is currently available to assess losses to tree species. Most of the data is expected to be for seedling trees, which would at least give an indication of the effects of ozone on productivity of new forests. Finally, a synthesis of all three types of data needs for ozone exposures, tree locations, and tree responses should to be initiated.

Additional Field Surveys. The current research has greatly expanded knowledge as to current ozone effects on agriculture in the San Joaquin Valley and has pointed towards areas where additional studies are needed. The surveys located areas with definite ozone injury, and also

indicated the difficulty in establishing causes for injury in different areas. Surveying the entire southern portion of the central valley was difficult, and the data were questionable due to differences in crop maturity across the valley. Focusing on injury symptoms in specific areas, where ozone concentrations are known to be highest, would be more effective for identifying and assessing ozone injury. Focusing on specific areas also would allow for examination of more crops rather than just one, such as cotton in 1988. Thus, additional survey work would be desirable, but only if focused on specific areas and in conjunction with local farm advisors who know the pest and cultural problems with crops in those areas.

Identification of locations where ozone injury symptoms appear on leaves would indicate where yield losses from ozone are most likely to be occurring in the San Joaquin Valley. A number of studies have indicated that leaf injury can be associated with plant growth and yield losses (Reinert, 1980). Nearly all NCLAN crop experiments showed injury to plants (Heck et al., 1986) primarily for the high added ozone concentrations which produced the greatest yield losses. For example, ozone injury to cotton was greatest with high ozone concentrations, and was significantly correlated with reduction in lint yield (Temple et al., 1985c). For dry beans substantial foliar injury and defoliation was associated with large reductions in yield (Kohut and Laurence, 1983). In addition, ozone injury exhibited as defoliation was associated with reductions in yield for alfalfa (Olszyk et al., 1986a, Oshima et al., 1976), and injury exhibited as decrease in leaf chlorophyll concentration was associated with reductions in yield for grapes (Thompson and Kats, 1970).

Thus, leaf injury evaluation could also give a general indication of the amount of reduction in yield for a number of crops such as cotton, alfalfa, beans, and grapes. For other crops such as tomatoes, onions and wheat leaf injury could still indicate the presence of reduced yields, even though there would not be as direct quantitative relationship between the amount of injury and percentage yield reduction (Decoteau et al., 1986; Oshima et al., 1977a,b; Wukasch and Hofstra, 1977). In addition, for some crops such as tomato, while leaf injury would still indicate that yield losses are possible, the amount of loss is highly dependent on cultivar (Oshima et al., 1977a).

Educational Materials. An ongoing objective of this project has been the presentation of information on crop and tree effects from ozone to growers, government officials, research scientists, and the general public. In the past workshops, seminars, and scientific reports have all been used effectively for government officials and scientists, but no publication was available which could readily indicate the results from this study to growers, county extension personnel, and the general public. Many such general information requests have been received and the only publications available regarding this project have been sections of the interim reports. Instead, short descriptions of the crop loss results written to inform the general public or "fact sheets" are needed so that they can be distributed to interested individuals in all areas of the state. The fact sheets would be accompanied with a letter which would request comments on the crop loss project and contact personnel for more information. The fact sheets would be written in a computer retrivable form so that they could be readily updated.

Another way of presenting information on vegetation effects from air pollution to interested groups of people in throught the construction of a portable display. The display would include photographs, text, handouts, and other materials which would inform the viewer regarding the effects of air pollution as well as indicate individuals to contact for more information.

IV. REFERENCES

Altschuller, A. P. 1987. Estimation of the natural background of ozone present at surface rural locations. J. Air Pollut. Contr. Assoc. 37:1409-1417.

Ashenden, T. W. and T. A. Mansfield. 1977. Influence of wind speed on the sensitivity of ryegrass to SO_2. J. Exp. Bot. 28:729-735.

Benedict, H. M., C. J. Miller, and R. E. Olson. 1971. Economic Impact of Air Pollutants on Plants in the United States. U.S. E.P.A., Air Pollution Control Office, Research Triangle Park, N.C. APTD-0953.

Brewer, R. F. 1978. The Effects of Present and Potential Air Pollution on Important San Joaquin Valley Crops: Sugar Beets. Final Report to the California Air Resources Board, Contract No. A6-161-30.

Brewer, R. F. 1982. The Effects of Ozone and SO_2 on Alfalfa Yields and Hay Quality. Final Report to the California Air Resources Board, Contract No. A1-038-33.

Brewer, R. F. 1983. The Effects of Ambient Air Pollution on Thompson Seedless Grapes. Final Report to the California Air Resources Board, Contract No. A1-132-33.

Brewer, R. F. 1985. The Effects of Ozone and Sulfur Dioxide on Cotton Growth and Quality. Final Report to the California Air Resources Board, Contract No. A3-047-33.

Buckenham, A. H., M. A. Parry, C. P. Wittingham, and A. T. Young. 1981. An improved open-topped chamber for pollution on crop growth. Environ. Pollut. Series B 2:275-282.

California Department of Food and Agriculture. 1987. California Agriculture, Statistical Review. 1986.

Commission of the European Communities. 1987. Microclimate and Plant Growth in Open-Top Chambers. Air Pollution Research Report S. EUR 11257. Proceedings of a workshop organized by the Commission of the European Communities and the Kernforschungszentrum Karlsruhe, Freiburg, 17-19 September 1986.

Decoteau, D. R., L. Grant and L. E. Craker. 1986. Failure of ozone susceptibility tests to predict yield reductions in wheat. Field Crops Res. 13:185-191.

Foster, K. W., H. Timm, C. K. Labanauskas and R. J. Oshima. 1983. Effects of ozone and sulfur dioxide in tuber yield and quality of potatoes. J. Environ. Qual. 12:75-80.

Greenwood, P., A. Greenhalgh, C. Baker, and M. Unsworth. 1982. A computer controlled system for exposing field crops to gaseous air pollutants. Atmos. Environ. 16:2261-2266.

Haselhoff, E., and G. Lindau. 1903. Die beshädigung der vegetation durch rauch, Leipzig.

Heagle, A. S., D. E. Body, and W. W. Heck. 1973. An open-top field chamber to assess the impact of air pollution on plants. J. Environ. Qual. 2:365.

Heagle, A. S., R. B. Philbeck, R. E. Ferrell, and W. W. Heck. 1989. Design and performance of a large field exposure chamber to measure effects of air quality on plants. J. Environ. Qual., in press.

Heagle, A. S., R. B. Philbeck and M. B. Letchworth. 1979. Injury and yield responses of spinach cultivars to chronic doses of ozone in open-top field chambers. J. Environ. Qual. 8:368-373.

Heagle, A. S., W. W. Heck, V. M. Lesser, J. O. Rawlings and F. L. Mowry. 1986. Injury and yield response of cotton to chronic doses of ozone and sulfur dioxide. J. Environ. Qual., 15:375-382.

Heck, W. W., O. C. Taylor, R. Adams, G. Bingham, J. Miller, E. Preston and L. Weinstein. 1982. Assessment of crop loss from ozone. J. Air Pollut. Contr. Assoc. 32:353-361.

Heck, W. W., R. M. Adams, W. C. Cure, A. S. Heagle, H. E. Heggestad, R. J. Kohut, L. W. Kress, J. O. Rawlings and O. C. Taylor. 1983. A reassessment of crop loss from ozone. Environ. Sci. Technol. 17:573-581A.

Heck, W. W., W. W. Cure, J. O. Rawlings, L. J. Zaragosa, A. S. Heagle, H. E. Heggestad, R. J. Kohut, L. W. Kress and P. J. Temple. 1984a. Assessing impacts of ozone on agricultural crops: I. Overview. J. Air Pollut. Contr. Assoc. 34:729-735.

Heck, W. W., W. W. Cure, J. O. Rawlings, L. J. Zaragosa, A. S. Heagle, H. E. Heggestad, R. J. Kohut, L. W. Kress and P. J. Temple. 1984b. Assessing impacts of ozone on agricultural crops: II. Crop yield functions and alternative exposure statistics. J. Air Pollut. Contr. Assoc. 34:810-817.

Heuss, J. M. 1982. Comment on "Assessment of crop loss from ozone." J. Air Pollut. Contr. Assoc. 32:1152-1153.

Hill, A. C., L. G. Transtrum, M. R. Pack, and A. Holman Jr. 1959. Facilities and techniques for maintaining a controlled fluoride environment in vegetation studies. J. Air Pollut. Contr. Assoc. 9:22-27.

Hill, A. C. 1967. A special purpose plant environment chamber for air pollution studies. J. Air Pollut. Contr. Assoc. 17:743-748.

Hogsett, W. E., D. T. Tingey, and S. R. Holman. 1985. A programmable exposure control system for determination of the effects of pollution exposure regimes on plant growth. Atmos Environ. 19:1135-1145.

Hogsett, W. E., D. Olszyk, D. P. Ormrod, G. E. Taylor, Jr., and D. T. Tingey. 1987. Air Pollution Exposure Systems and Experimental Protocols: Volumes 1 and 2. Environmental Research Laboratory, Office of Research and Development, U.S. EPA, Corvallis, OR 97333 EPA 600/3-87/037 a,b.

Houpis, J. L. J., K. R. Suranso, S. Cowles, M. P. Costello, S. Benes, and P. D. Anderson. 1988. Ann Report: Comparison of the responses of mature branches and seedlings of Pinus Ponderosa to atmospheric pollution, UCRL-21001-88-6.

Kats, G., P. J. Dawson, A. Bytnerowicz, J. W. Wolf, C. R. Thompson and D. M. Olszyk. 1985a. Effects of ozone or sulfur dioxide on growth and yield of rice. Agric., Ecosys. and Environ. 14:103-117.

Kats, G., D. M. Olszyk, and C. R. Thompson. 1985b. Open-top experimental chambers for trees. J. Air Pollut. Contr. Assoc. 35:1298-1301.

Kats, G., C. R. Thompson, and W. C. Kuby. 1976. Improved ventilation of open-top greenhouses. J. Air Pollut. Control Assoc. 26:1089-1090.

Kohut, R. J., R. G. Amundson, and J. A. Laurence. 1986. Evaluation of growth and yield of soybean exposed to ozone in the field. J. Environ. Pollution (Series A). 41:219-234.

Kohut, R. and J. A. Laurence. 1983. Yield response of red kidney bean Phaseolus vulgaris to incremental ozone concentrations in the field. Environ. Pollut. 32:233-240.

Kress, L. W. and J. E. Miller. 1985a. Impact of ozone on grain sorghum yield. Water, Air, and Soil Pollut. 25:377-390.

Kress, L. W. and J. E. Miller. 1985b. Impact of ozone on field-corn yield. Can. J. Bot. 63:2408-2415.

Kress, L. W., J. E. Miller and H. J. Smith. 1985. Impact of ozone on winter wheat yield. Environ. Exper. Bot. 25:211-228.

Laurence, J. A., and R. J. Kohut. 1984. Lake Erie generating station grape study. Phase I and II. Contract #GF127.1T123083. Niagra Mohawk Power Co., New York State Public Service Commission, Albany, NY.

Lee, J. J., and R. A. Lewis. 1976. Field experimental component. pp. 95-101, in R. A. Lewis and A. S. Lefohn (eds.) The Bioenvironmental Impact of a Coal Fired Power Plant. First Interim Report, Colstrip, MT, December 1974. U. S. Environmental Protection Agency, Corvallis, OR, EPA-600/3-76-002.

Lefohn, A. S. and C. K. Jones. 1986. The characterization of ozone and sulfur dioxide air quality data for assessing possible vegetation effects. J. Air Pollut. Contr. Assoc. 36:1123-1129.

McBride, J. R., V. P. Semion and P. R. Miller. 1975. Impact of air pollution on the growth of ponderosa pine. Calif. Ag. 29(12):8-9.

McCool, P. M., R. C. Musselman, R. R. Teso and R. J. Musselman. 1986. Determining yield losses from air pollutants for California agriculture. Calif. Ag. 40(7-8):9-10.

Mandl, R. H., L. H. Weinstein, D. C. McCune, and M. Keveny. 1973. A cylindrical open-top chamber for the exposure of plants to air pollutants in the field. J. Environ. Qual. 2:371.

Mandl, R. H., J. A. Laurence, and R. J. Kohut. 1989. Development and testing of open-top chambers for exposing large perennial plants to air pollutants. J. Environ. Qual., in press.

McLeod, A. R. and C. K. Baker. 1988. The use of open-field systems to assess yield response to gaseious pollutants. pp. 181-210. In: Heck, W. W., O. C. Taylor, and D. T. Tingey, eds. Assessment of Crop Loss from Air Pollutants. Elsevier:New York.

Millecan, A. A. 1971. A Survey and Assessment of Air Pollution Damage to California Vegetation in 1970. U.S. E.P.A., Air Pollution Control Office, Research Triangle Park, N.C. APTD-0694.

Millecan, A. A. 1976. A Survey and Assessment of Air Pollution Damage to California Vegetation 1970 through 1974. State of California Department of Food and Agriculture.

Miller, J. E., D. G. Sprugel, H. J. Smith, and P. B. Xerikos (1980) Open-air fumigation system for investigaiton of sulfur dioxide effects on crops. Phytopathology 70:1124-1128.

Miller, P. R. 1983. Ozone Effects in the San Bernardino National Forest. In: Proceedings of the Workshop on Air Pollution and the Productivity of the Forest, Izaak Walton League of America, Arlington, VA, 1983, pp. 161-197.

Miller, P. R. and A. A. Millecan. 1971. Extent of oxidant air pollution damage to some pines and other conifers in California. Plant Dis. Reptr. 55:555-559.

Miller, P. R., M. H. McCutchan and M. P. Milligan. 1972. Oxidant air pollution in the Central Valley, Sierra Nevada foothills, and Mineral King Valley of California. Atmos. Environ. 6:623-633.

Musselman, R. C., P. M. McCool, R. J. Oshima, and R. R. Teso. 1986. Field chambers for assessing crop loss from air pollutants. J. Environ. Qual. 15:152-157.

Nystrom, D. D., R. C. Hendrickson, G. C. Pratt, and S. V. Krupa. 1982. A computerized open-top field chamber for exposing plants to air pollutants. Agric. Environ. 7:213-222.

Olszyk, D. M. 1989. Mechanistic Basis for the Growth and Yield Effects of Ozone on Valencia Oranges Draft Final Report for Project No. A733-087 for California Air Resources Board.

Olszyk, D. M., A. Bytnerowicz, G. Kats, P. J. Dawson, J. Wolf and C. R. Thompson. 1986a. Crop effects from air pollutants in air exclusion systems vs. field chambers. J. Environ. Qual., 15:417-422.

Olszyk, D. M., A. Bytnerowicz, G. Kats, P. J. Dawson, J. Wolf and C. R. Thompson. 1986b. Effects of sulfur dioxide and ambient ozone on winter grown crops: winter wheat and lettuce. J. Environ. Qual. 15:363-369.

Olszyk, D. M., H. Cabrera and C. R. Thompson. 1988a. California statewide assessment of the effects of ozone on crop productivity. J. Air Pollut. Contr. Assoc. 38:928-931.

Olszyk, D. M., G. Kats, P. J. Dawson, A. Bytnerowicz, J. Wolf and C. R. Thompson. 1986. Characteristics of air exclusion system chambers for field vs. air pollution studies. J. Env. Qual. 15:326-330.

Olszyk, D. M., C. R. Thompson and M. P. Poe. 1988b. Crop loss assessment for California: modeling losses with different ozone standard scenarios. Environ. Pollut. 53:303-311.

Oshima, R. J., O. C. Taylor, P. K. Braegelmann and D. W. Baldwin. 1975. Effect of ozone on the yield and plant biomass of a commercial variety of tomato. J. Environ. Qual. 4:463-464.

Oshima, R. J., M. P. Poe, P. K. Braegelmann, D. W. Baldwin, and V. Van Way. 1976. Ozone dosage-crop loss function for alfalfa: a standardized method for assessing crop losses from air pollutants. J. Air Pollut. Contr. Assoc. 26:861-865.

Oshima, R. J., P. K. Braegelmann, D. W. Baldwin, V. Van Way and O. C. Taylor. 1977a. Reduction of tomato fruit size and yield by ozone. J. Am. Soc. Hort. Sci. 102:289-293.

Oshima, R. J., P. K. Braegelmann, D. W. Baldwin, V. Van Way and O. C. Taylor. 1977b. Responses of five cultivars fresh market tomato to ozone: a contrast of cultivar screening with foliar injury and yield. J. Amer. Soc. Hortic. Sci. 286-289.

Pell, E. J., N. S. Pearson and C. Vinten-Johansen. 1988. Qualitative and quantitative effects of ozone and/or sulfur dioxide on field-grown potato plants. Environ. Pollut. 53:171-186.

Peterson, D. L., M. J. Arbaugh, V. A. Wakefield and P. R. Miller. 1987. Evidence of growth reduction in ozone-stressed Jeffrey pine (Pinus Jeffreyi Grev. and Balf.) in Sequoia and Kings Canyon National Parks. J. Air Pollut. Control Assoc. 37:906-912.

Peterson, D. L. and M. J. Arbaugh. 1988. An evaluation of the effects of ozone injury on radial growth of ponderosa pine (Pinus ponderosa) in the southern Sierra Nevada. J. Air Pollut. Control Assoc. 38:921-927.

Pronos, J. and D. R. Vogler. 1978. An Evaluation of Ozone Injury to Pines in the Southern Sierra Nevada. USDA Forest Service Pacific Southwest Region, Forest Pest Management Report 81-20.

Reinert, R. A. 1980. Assessment of crop productivity after chronic exposure to ozone or pollutant combinations. Paper 80-26.4. Presented at 73rd Annual Meeting if the Air Pollution Control Association, Montreal, Quebec, Canada.

Runeckles, V. C., L. M. Staley and N. R. Bulley. 1978. A downdraft chamber for studying the effects of air pollutants on plants. Can. J. Bot. 56:768-778.

Snyder, R. G., J. E. Simon, R. A. Reinert, M. Simini and W. W. Heck. 1988. Effects of air quality on foliar injury, growth, yield, and quality of muskmelon. Environ. Pollut. 53:187-196.

Suefert, Von G., and U. Arndt. 1985. Open-top kammern als teil einer kinzepts aur okosystemaren unter suchung der neuartigen woldschaden. Allg. Forstz. 40:13-20.

Takemoto, B. K., D. M. Olszyk, A. G. Johnson and C. R. Parada. 1987. Yield responses of field-grown crops to acidic fog and ambient ozone. J. Environ. Qual., submitted for publication.

Temple, P. J., K. A. Surano, R. G. Mutters, G. G. Bingham and J. H. Shinn. 1985a. Air pollution causes moderate damage to tomatoes. Calif. Ag. 39:20-22.

Temple, P. J., O. C. Taylor and L. F. Benoit. 1985b. Effects of ozone on yield of two field-grown barley cultivars. Environ. Pollut. 39:217-225.

Temple, P. M., O. C. Taylor and L. F. Benoit. 1985c. Cotton yield responses to ozone as mediated by soil moisture and evapotranspiration. J. Environ. Qual. 14:55-60.

Temple, P. J., O. C. Taylor and L. F. Benoit. 1986. Yield response of head lettuce (Lactuca sativa L.) to ozone. Environ. Exp. Bot. 26:53-58.

Temple, P. J., L. F. Benoit, R. W. Lennox, C. A. Reagan and O. C. Taylor. 1987. Combined effects of ozone and water stress on alfalfa growth and yield. J. Environ. Qual., in press.

Thomas, M. D. 1961. Effects of air pollution on plants. World Health Organization Geneva Monograph. 46:233-278.

Thompson, C. R., and O. C. Taylor. (1966). Plastic covered greenhouses supply controlled atmospheres to citrus trees. Trans. Am. Soc. Agr. Eng. 9:338-339.

Thompson, C. R., and D. M. Olszyk. 1985. A field air-exclusion system for measuring the effects of air pollutants on crops. EPRI EA-4203. Final Report, Project 1908-3. Electric Power Research Institute, Palo Alto, CA.

Thompson, C. R. and O. C. Taylor. 1969. Effects of air pollutants on growth, leaf drop, fruit drop, and yield of citrus trees. Environ. Sci. Technol. 3:934-940.

Thompson, C. R. and G. Kats. 1970. Ambient oxidants reduce grape yield reductions from photochemical smog. Calif. Ag. 24:12-13.

Thompson, C. R., G. Kats and J. W. Cameron. 1976. Effects of ambient photochemical air pollutants on growth, yield, and ear characters of two sweet corn hybrids. J. Environ. Qual. 5:410-412.

Thompson, C. R. and D. M. Olszyk. 1986. Crop Loss From Air Pollutants Assessment Program. Interim Report to the California Air Resources Board for Contracts No. A5-031-33 and A4-088-33.

Wukasch, R. T. and G. Hofstra. 1977. Ozone and botrytis interactions in onion-leaf dieback: open-top chamber studies. Phytopathology 67:1080-1084.

Zimmerman, P. W., and A. E. Crocker. 1934a. Plant injury caused by vapors of mercury and compounds of mercury. Contrib. Boyce Thomp. Instit. 6:167-187.

Zimmerman, P. W. and A. E. Crocker. 1934b. Toxicity of air containing sulfur dioxide gas. Contrib. Boyce Thomp. Instit. 6:445-470.