SECTION 5.0

EQUIPMENT SURVEY RESULTS

5.1 TANKS

There has never been a complete inventory of the estimated 10,000 tanks associated with California crude oil production. KVB collected data that was available from each of the air pollution control districts, oil production companies, and the Air Resources Board. Collectively, that information is still inadequate as a complete inventory.

The most comprehensive survey information was provided by the Ventura County Air Pollution Control District. From their 1978 inventory print-out KVB was able to characterize the lease tankage for 169 leases. This tankage accounts for 453 tanks or 4.5 percent of the estimated statewide tank population. The 453 tanks were comprised of 65 percent storage, 18 percent wash, 8 percent Lease Automatic Custody Transfer (LACT), 7 percent test/gauge, and 2 percent other.

Table 5.1-1 presents the lease tankage for each of the surveyed Ventura County leases as a function of throughput. It can be seen that a wide variation in tankage capacity can exist between leases with similar throughputs, which can be attributed to several factors. The first is that the lease may be an old one where the production rate has declined. The tankage may have been sized for a larger flow rate and there is now excess capacity. Second, the amount of water in the produced fluid will dictate if and how many wash tanks are needed. Third, terrain may impact the number of tanks and capacity as rough terrain leases tend to have more tanks. Fourth, unitized operations or leases with LACT systems generally have reduced tankage.

The lease tankage averages in Table 5.1-1 show that lease tankage generally increases until lease production reaches 200,000 barrels per year. This was assumed to indicate the increased presence of LACT systems. With a LACT system, product is continually pumped directly to a refinery or receiving

TABLE 5.1-1. 1978 VENTURA COUNTY CRUDE OIL LEASE TANKAGE SPECTRUM AND AVERAGE TANKAGE PER LEASE

Lease Throughput (10^3 bbl/yr)	0-25	26-50	51-100	101-200	200-1000	>1000
Lease Tankage (10^3 bbl x No. of Lease)						
	0.2 x 1	0.5 x 2	1.0 x 1	1.0 x 1	1.0 x 2	7.45 x 1
	0.35 x 2	1.0 x 5	1.25 x 1	1.3 x 1	2.75 x 1	26.3 x 1
	0.4 x 1	1.5 x 2	1.6 x 1	1.5 x 1	3.75 x 1	35.2 x 1
	0.5 x 8	1.6 x 1	2.0 x 2	2.0 x 1	6.45 x 1	54.0 x 1
	0.55 x 2	2.0 x 2	2.1 x 1	2.8 x 1	7.0 x 1	58.0 x 1
	0.6 x 1	2.2 x 1	2.5 x 1	3.0 x 1		62.5 x 1
	0.7 x 1	2.4 x 1	2.8 x 1	3.2 x 2		
	0.8 x 3	2.5 x 1	3.8 x 1	5.0 x 1		
	0.9 x 1	3.2 x 2	4.0 x 3	5.5 x 2		
	1.0 x 18	3.3 x 1	6.0 x 1	6.0 x 2		
	1.2 x 1	3.5 x 1	7.0 x 1	6.4 x 1		
	1.4 x 1	4.0 x 3	7.2 x 1	7.0 x 1		
	1.5 x 3	4.3 x 1	9.0 x 1	8.0 x 2		
	2.0 x 19	4.85 x 1	11.0 x 1	9.0 x 1		
	2.2 x 4	4.9 x 1	13.6 x 1	11.0 x 1		
	2.7 x 1	6.5 x 2	18.0 x 1	11.5 x 1		
	3.0 x 2	7.0 x 1		14.0 x 1		
	3.2 x 6	7.4 x 1				
	3.5 x 3					
	4.0 x 5					
	4.25 x 1					
	5.5 x 1					
	6.0 x 2					
	8.0 x 1					
Total No. of Sample Leases	88	29	19	21	6	6
Sum of Tankage	171.05	88.35	102.85	120.9	20.95	243.45
Average Tankage Per Lease (10^3 bbl)	1.94	3.05	5.41	5.76	3.49	40.58
Average Tankage Per Lease to the Best Integer (bbl)	2,000	3,000	5,500	5,800	3,500	41,000

facility by pipeline. As a result, only minimal surge capacity is required. If a LACT system is not used, produced crude is transported by truck. This requires more surge capacity and, hence more tankage. The lease tankage capacity increases again as production exceeds 1,000,000 barrels per year.

Intuitively, it would appear that such a large capacity figure, which differs from the others by an order of magnitude, must be in error. However, industry sources contacted by KVB to explore this question indicate that leases with production rates of this magnitude are rare and when they do occur their tankage can be expected to serve not only that lease's production, but also receive and transfer via a centralized LACT system production from outlying leases.

Tank setting capacity for leases surveyed in this program are compared to the Ventura County data in Figure 5.1-1. It can be seen that all of the leases fall in the capacity range witnessed in Ventura County with the exception of the two Signal Hill Units which were surveyed. This is a rather good correlation which supports the use of the Ventura County Data.

The average tankages for the five production rate categories were rounded off to yield the lease tankage capacity model for this program. This is presented in Table 5.1-2.

TABLE 5.1-2. LEASE TANK CAPACITY MODEL

Throughput (10^3 bbl/yr)	0-25	26-50	51-100	101-200	200-1000	>1000
Tank Capacity (x 10^3 bbl)	2	3	5.5	5.8	3.8	41

Using this model, tank capacity was estimated for each lease in the eight study counties. The DOG data base print-out was used for this purpose. Table 5.1-3 is a typical page from that print-out and shows the

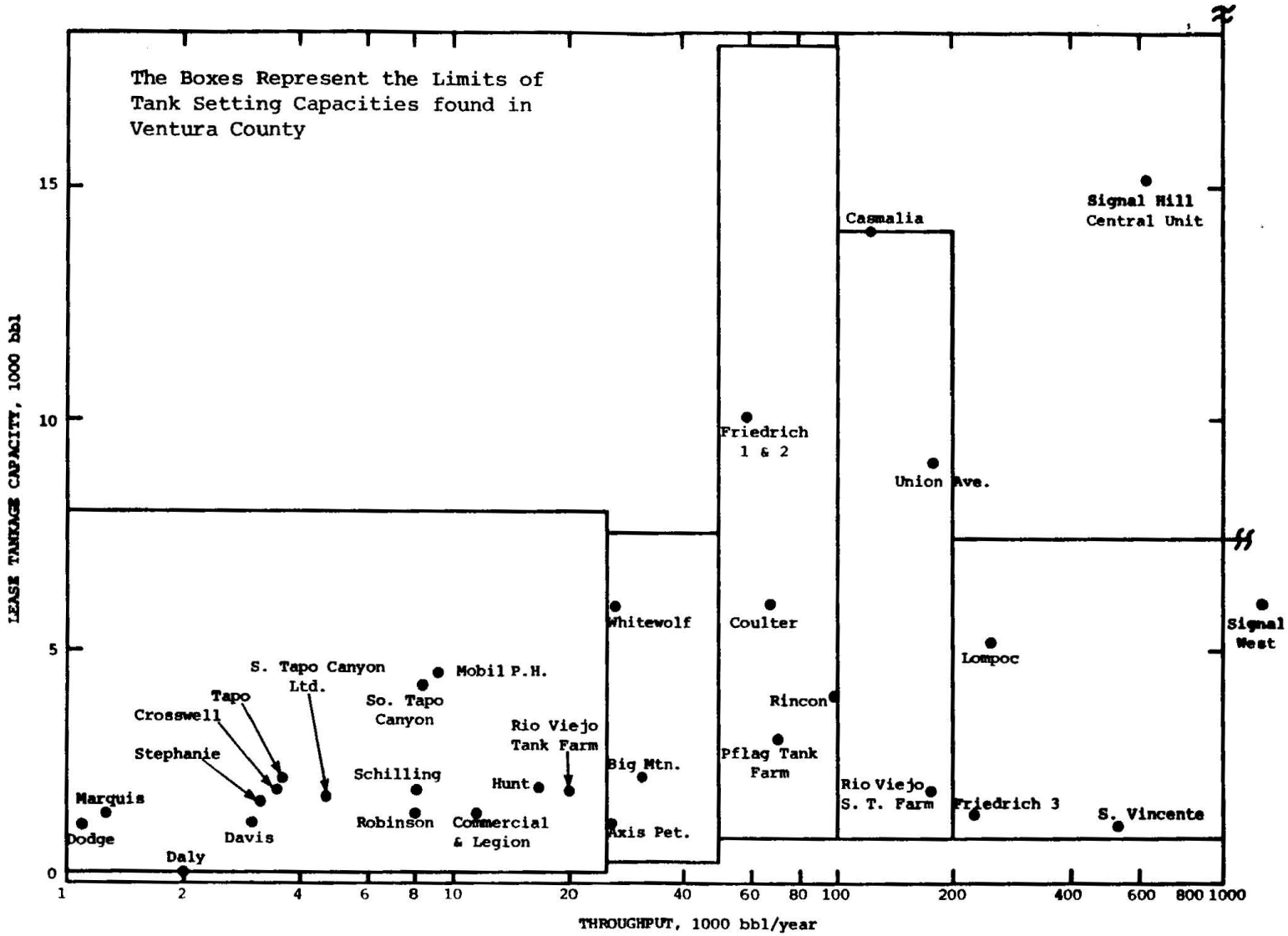

Figure 5.1-1. Comparison of Ventura County Oil Field Lease Tank Capacities to those in Surveyed Leases and Fields.

TABLE 5.1-3. EXAMPLE OF TANK CAPACITY ASSIGNMENTS FROM CALIFORNIA DIVISION OF OIL AND GAS DATA BASE

Field	Tank[1] Capacity	Oper. Code	Lease Name	Total BBLS of Oil/ Condensate
Fruitvale	--	B7700	Duke	
	--	B7700	E & H Dillon	
	--	B7700	Fruitvale Community	
	2 N	B7700	Red Ribbon	1,450
	2 N	B7700	Smott	185
	--	B7700	Strip	
	--	B7700		2,384
	2 N	C4350	Calplans-Echenique et al	4,483
	--	C4350		4,483
	--	C9000	Kernland	6,762
	2 N	E3350	Tenneco	3,400
	--	E3350		3,400
	2 N	F2200	Zombie	2,862
	--	F2200		2,862
	2 N	G0800	Echenique	1,788
	2 N	G0800	Fruitvale School	1,751
	3 N	G0800	Tenneco	32,734
	--	G0800		36,273
	2 N	G3400	Tenneco B	14,512
	--	G3400		14,512
	--	G4000		
	2 N	G4000	A. C. West	1,786
	2 N	G4000	Bittle	2,610
	2 N	G4000	Brackenbury	11,929
	2 N	G4000	Edward West	6,441

[1] Tank capacity expressed as 10^3 bbl; N signifies that no vapor control is employed.

assignment of tank capacities per lease. All capacities were assigned in this fashion except for those leases where the exact capacities were known to differ significantly from the model.

The "N" in the tank column signifies that these tanks do not have vapor recovery. For most small leases such as those shown in Table 5.1-3, there is little likelihood of vapor recovery being used. Vapor recovery appears with larger leases and increased gas production. It is generally more prevalent with the major oil producers rather than the independent producers. Vapor recovery assignments were made on the basis of lease production, field, location, gas/oil ratio, and the type of operator.

The tank capacities and annual throughput with and without vapor recovery are tabulated by field in Table 5.1-4. Also shown in this table are the emission factor coefficients for the emissions model presented in Section 6.0. The ΔT or average diurnal temperature change was obtained from Reference 11. As indicated, the true vapor pressures were developed where possible from reliable data provided by ARB and other sources. County or area rules of thumb were used for those fields where no reliable data could be obtained. As indicated in Section 6.0, the stock temperature was assumed to be 107°F.

5.2 VALVES AND FITTINGS

Interesting correlations were noted for the numbers of valves and fittings counted at a given oil production lease as a function of the number of wells. These are shown in Figure 5.2-1 for valves and Figure 5.2-2 for fittings. An interesting coincidence is that the slopes of both graphs or the exponents in the equations shown are identical, 0.93. For small leases there are approximately 40 valves and 85 fittings per well while for large leases, e.g., 100 wells, there are approximately 28 valves and 60 fittings per well, a 30 percent reduction.

These figures were prepared following the initial primary production phase of the program. They reflect onshore leases as well as the oil island and offshore platforms.

TABLE 5.1-4. FIELD TANKAGE CHARACTERISTICS

Field	ΔT*	$C_{\Delta T}$†	TVP[a]	C_{TVP}†	Tankage (10^3 bbl) With Vapor Recovery	Throughput (10^3 bbl) With Vapor Recovery	Tankage (10^3 bbl) No Vapor Recovery	Throughput (10^3 bbl) No Vapor Recovery
Huntington Beach	14	0.748	2.9[b]	0.60	84	9,322.53	400.0	945.16
Kraemer	30	1.095	4.1	0.82	--	--	30.0	37.12
Newport, West	14	0.748	4.1	0.82	--	--	37.0	835.71
Olive	30	1.095	4.1	0.82	--	--	7.0	44.6
Richfield	30	1.095	4.1	0.82	--	1,252.26	93.0	654.94
Seal Beach	19	0.872	3.2[b]	0.66	11.6	296.16	6.0	12.97
Sunset Beach	19	0.872	4.1	0.82	--	--	8.0	11.86
Yorba Linda	30	1.095	1.6[c]	0.38	--	--	98.8	2,850.24
Arroyo Grande	23	0.959	2.0[c]	0.45	--	--	46.8	275.91
Guadalupe	23	0.959	7.1[c]	1.50	41	1,229.21	--	--
Midway Sunset	26	1.020	0.9[c]	0.25	--	--	19.0	125.34
Morales Canyon	35	1.183	3.8	0.77	--	--	2.0	2.8
Russel Ranch	35	1.183	4.9[c]	0.98	--	--	15.5	93.36
Taylor Canyon	35	1.183	4.9[c]	0.98	--	--	2.0	2.39
Algeria Offshore	23	0.959	3.8	0.77	--	--	5.5	50.73
Barham Ranch	23	0.959	3.8	0.77	--	--	2.0	10.63
Capitan	23	0.959	3.8	0.77	--	--	5.0	57.56
Careaga Canyon	23	0.959	3.8	0.77	--	--	2.0	7.07
Carpinteria Offshore	23	0.959	3.8	0.77	--	--	--	--
Casmalia	23	0.959	5.5[d]	1.11	11.6	382.10	26.5	199.71
Cat Canyon	23	0.959	1.9[c]	0.43	51.2	3,508.50	260.0	2,504.18
Cuyama, South	35	1.183	3.8	0.77	3.5	596.30	5.0	40.80
Elwood	23	0.959	3.8	0.77	--	--	7.0	54.15
Elwood, South Offshore	23	0.959	3.8	0.77	--	--	--	--

(continued)

[a]Unless noted, regional average RVP used with stack temperature of 107°F to arrive at TVP

[b]ARB data base

[c]KVB data base

[d]Weighted mean of tanks inventoried by KVB

*Average diurnal temperature change for that site

†Temperature change and true vapor pressure correction factors used in emissions modeling procedure

TABLE 5.1-4. (CONTINUED)

Field	ΔT*	$C_{\Delta T}$†	TVP[a]	C_{TVP}†	Tankage (10^3 bbl) With Vapor Recovery	Throughput (10^3 bbl) With Vapor Recovery	Tankage (10^3 bbl) No Vapor Recovery	Throughput (10^3 bbl) No Vapor Recovery
Four Deer	23	0.959	3.8	0.77	--	--	4.0	6.54
Guadalupe	23	0.959	7.1[c]	1.50	--	--	2.0	16.80
Lompoc	23	0.959	4.2[d]	0.84	--	--	33.5	251.38
Orcutt	23	0.959	4.9	0.98	24.4	776.41	50.0	485.18
Point Conception	23	0.959	3.9[b]	0.79	--	--	5.0	39.97
Russell Ranch	35	1.183	2.6[c]	0.55	5.8	105.67	2.0	0.70
Santa Maria Valley	23	0.959	5.7[d]	1.15	31.4	2,413.17	138.0	818.21
Summerland Offshore	23	0.959	3.8	0.77	--	--	--	--
Zaca	23	0.959	3.8	0.77	--	--	32.0	329.68
Bardsdale	28	1.058	7.3[b]	1.55	--	--	65.5	105.55
Big Mountain	28	1.058	4.7[d]	0.94	--	--	4.0	31.17
Canada Largo	33	1.149	5.2	1.04	--	--	2.0	1.38
El Rio	21	0.917	5.2	1.04	--	--	2.0	7.53
Eureka Canyon	28	1.058	5.2	1.04	--	--	14.0	23.33
Holser	28	1.058	5.2	1.04	--	--	14.0	66.50
Hopper Canyon	28	1.058	5.2	1.04	--	--	7.0	29.97
Las Posas	21	0.917	5.2	1.04	--	--	2.0	2.06
Montalvo West	21	0.917	5.2	1.04	--	--	26.5	180.43
Moorpark West	28	1.058	5.2	1.04	--	--	4.0	18.99
Oak Park	28	1.058	5.2	1.04	--	--	5.5	59.97
Oak Ridge	28	1.058	5.2	1.04	5.8	159.21	--	--
Ojai	33	1.149	1.1[b]	0.28	--	--	56.3	1,163.06
Oxnard	21	0.917	5.2	1.04	--	--	62.0	229.52
Piru	28	1.058	5.2	1.04	--	--	4.0	2.51

(continued)

[a]Unless noted, regional average RVP used with stack temperature of 107°F to arrive at TVP

[b]ARB data base

[c]KVB data base

[d]Weighted mean of tanks inventoried by KVB

*Average diurnal temperature change for that site

†Temperature change and true vapor pressure correction factors used in emissions modeling procedure

TABLE 5.1-4. (CONTINUED)

Field	ΔT*	$C_{\Delta T}$†	TVP[a]	C_{TVP}†	Tankage (10^3 bbl) With Vapor Recovery	Throughput (10^3 bbl) With Vapor Recovery	Tankage (10^3 bbl) No Vapor Recovery	Throughput (10^3 bbl) No Vapor Recovery
Ramona	28	1.058	5.2	1.04	--	--	20.0	108.55
Rincon	21	0.917	4.3[d]	0.86	29.3	1,589.17	41.5	324.22
San Miguelito	21	0.917	5.2	1.04	41	2,199.35	--	--
Santa Clara Ave.	21	0.917	2.5[d]	0.53	16	380.40	--	--
Santa Paula	28	1.058	5.2	1.04	--	--	18.0	10.01
Santa Susana	28	1.058	5.2	1.04	5.8	151.23	--	--
Saticoy	21	0.917	5.2	1.04	--	--	11.5	155.73
Sespe	28	1.058	5.2	1.04	9.3	431.58	26.5	209.26
Shiells Canyon	28	1.058	3.9[b]	0.79	--	--	26.5	209.26
Simi	28	1.058	5.2	1.04	--	--	18.0	32.74
South Mountain	21	0.917	5.7[b]	1.15	--	--	200.0	1,262.33
Tapo Canyon, South	28	1.058	2.6[d]	0.55	--	--	13.0	57.67
Tapo Ridge	28	1.058	5.2	1.04	--	--	2.0	2.38
Tapo, North	28	1.058	5.2	1.04	--	--	6.0	14.04
Temescal	28	1.058	3.7[b]	0.75	--	--	6.0	38.31
Timber Canyon	28	1.058	5.2	1.04	--	--	16.0	86.86
Torrey canyon	28	1.058	4.5[b]	0.90	3.5	213.53	--	--
Ventura	21	0.917	7.5[c]	1.61	99.5	6,655.20	82.0	690.88
West Mountain	21	0.917	5.2	1.04	--	--	14.0	41.02
Ant Hill	26	1.020	1.2	0.30	--	--	14.5	112.62
Antelope Hills	30	1.095	0.9[c]	0.25	--	--	16.5	133.20
Antelope hills NOrth	30	1.095	1.2	0.30	--	--	6.0	22.02
Asphalto	26	1.020	3.8[b]	0.77	--	--	32.0	294.77
Beer Nose	29	1.077	7.7[b]	1.67	--	--	4.0	13.05

(continued)

[a]Unless noted, regional average RVP used with stack temperature of 107°F to arrive at TVP

[b]ARB data base

[c]KVB data base

[d]Weighted mean of tanks inventoried by KVB

*Average diurnal temperature change for that site

†Temperature change and true vapor pressure correction factors used in emissions modeling procedure

TABLE 5.1-4. (CONTINUED)

Field	ΔT*	$C_{\Delta T}$†	TVP[a]	C_{TVP}†	Tankage (10^3 bbl) With Vapor Recovery	Throughput (10^3 bbl) With Vapor Recovery	Tankage (10^3 bbl) No Vapor Recovery	Throughput (10^3 bbl) No Vapor Recovery
Belgian Anticline	26	1.020	1.2	0.30	5.8	116.40	63.5	249.55
Bellevue	26	1.020	1.2	0.30	--	--	13.5	121.94
Bellevue West	26	1.020	1.2	0.30	--	--	8.0	23.86
Belridge North	30	1.095	1.2	0.30	3.5	277.58	46.5	486.03
Belridge South	30	1.095	1.2	0.30	--	--	545.4	17,854.66
Blackwells Corner	30	1.095	1.2	0.30	--	--	10.0	6.63
Buena Vista	26	1.020	1.2	0.30	53.8	1,917.97	78.5	563.83
Cal Canal	30	1.095	1.2	0.30	17.4	341.85	12.0	115.91
Calders Corner	26	1.020	1.2	0.30	--	--	2.0	3.02
Canal	26	1.020	8.5[b]	1.94	--	--	8.0	37.78
Canfield Ranch	26	1.020	3.3[d]	0.68	--	--	77.5	503.23
Capitola Park	26	1.020	1.2	0.30	--	--	--	--
Carneros Creek	30	1.020	1.2	0.30	--	--	2.0	2.08
Chico - Martinez	26	1.020	1.2	0.30	--	--	6.0	6.96
Cienaga Canyon	26	1.020	1.2	0.30	--	--	2.0	4.26
Coles Levee North	26	1.020	1.2	0.30	35	2,151.82	2.0	4.75
Coles Levee South	26	1.020	1.2	0.30	--	--	30.0	424.60
Comanche Point	26	1.020	1.2	0.30	--	--	6.0	5.28
Cymric	26	1.020	1.2	0.30	46.8	1,229.40	245.0	2,151.02
Devils Den	30	1.095	1.2	0.30	--	--	34.0	41.85
Edison	26	1.020	1.2	0.30	--	--	397.4	1,476.05
Edison, Northeast	26	1.020	1.2	0.30	--	--	8.0	10.79
Elk Hills	26	1.020	1.2	0.30	41	54,348.86	--	--
English Colony	26	1.020	1.2	0.30	--	--	6.0	5.90
Fruitvale	26	1.020	1.2	0.30	--	--	265.0	981.34

(continued)

[a]Unless noted, regional average RVP used with stack temperature of 107°F to arrive at TVP

[b]ARB data base

[c]KVB data base

[d]Weighted mean of tanks inventoried by KVB

*Average diurnal temperature change for that site

†Temperature change and true vapor pressure correction factors used in emissions modeling procedure

TABLE 5.1-4. (CONTINUED)

Field	ΔT*	$C_{\Delta T}$†	TVP[a]	C_{TVP}†	Tankage (10^3 bbl) With Vapor Recovery	Throughput (10^3 bbl) With Vapor Recovery	Tankage (10^3 bbl) No Vapor Recovery	Throughput (10^3 bbl) No Vapor Recovery
Goosloo	26	1.020	7.9[b]	1.74	--	--	6.0	14.71
Greeley	26	1.020	1.2	0.30	--	--	48.0	299.78
Jasmin	30	1.095	1.2	0.30	--	--	24.0	134.72
Jasmin, West	30	1.095	1.2	0.30	--	--	4.0	1.10
Jerry Slough	30	1.095	1.2	0.30	--	--	2.0	1.66
Kern Bluff	26	1.020	1.2	0.30	--	--	33.5	130.76
Kern Front	26	1.020	1.2	0.30	--	--	211.6	2,613.10
Kern River	26	1.030	0.9[c]	0.25	--	--	818.7	34,170.48
Lakeside	26	1.020	1.2	0.30	--	--	2.0	1.52
Los Lobos	26	1.020	1.2	0.30	--	--	2.0	4.94
Los Hills	30	1.095	1.2	0.30	--	--	136.9	2,576.01
Lost Hills, Northwest	30	1.095	1.2	0.30	--	--	2.0	3.45
McDonald Anticline	30	1.095	1.2	0.30	5.8	118.92	41.0	143.56
McKittrick	26	1.020	1.2	0.30	52.3	2,529.91	179.5	1,434.24
Midway-Sunset	26	1.020	0.85[c]	0.24	--	--	1303.3	40,240.99
Mount Poso	26	1.020	1.0[c]	0.26	--	--	226.8	6,578.44
Mountain View	26	1.020	1.2	0.30	--	--	231.0	439.91
Paloma	26	1.020	7.2[b]	1.53	--	--	19.0	93.71
Pioneer	26	1.020	1.2	0.30	--	--	2.0	0.83
Aliso Canyon	28	1.058	5.7	1.2	16.5	226.38	26.0	223.66
Alondra	19	0.872	4.1	0.82	--	--	2.0	1.43
Bandini	19	0.872	4.1	0.82	--	--	6.0	31.59
Beverly Hills	20	0.894	4.1	0.82	93	2,749.66	25.0	173.30
Brea-Olinda	30	1.095	4.9[c]	0.98	22	330.82	11.0	59.01
Canton Creek	--	1.000	5.7	1.15	--	--	2.0	0.03

(continued)

[a]Unless noted, regional average RVP used with stack temperature of 107°F to arrive at TVP

[b]ARB data base

[c]KVB data base

[d]Weighted mean of tanks inventoried by KVB

*Average diurnal temperature change for that site

†Temperature change and true vapor pressure correction factors used in emissions modeling procedure

TABLE 5.1-4. (CONTINUED)

Field	ΔT*	$C_{\Delta T}$†	TVP[a]	C_{TVP}†	Tankage (10^3 bbl) With Vapor Recovery	Throughput (10^3 bbl) With Vapor Recovery	Tankage (10^3 bbl) No Vapor Recovery	Throughput (10^3 bbl) No Vapor Recovery
Cascade	28	1.058	5.7	1.15	--	--	5.0	58.59
Castaic Hills	28	1.058	5.7	1.15	--	--	11.0	33.85
Castaic Junction	28	1.058	5.7	1.15	3.5	266.33	2.0	7.52
Cheviot Hills	20	0.894	4.1	0.82	5.5	52.52	15.0	114.60
Coyote, West	21	0.917	3.9[b]	0.79	--	--	5.5	302.89
Del Valle	28	1.058	5.7	1.15	--	--	17.0	81.48
Dominguez	21	0.917	4.3[c]	0.86	20.3	693.52	13.0	85.63
El Segundo	6	0.800	4.1	0.82	--	--	10.0	36.34
Hasley Canyon	28	1.058	5.7	1.15	--	--	10.0	83.23
Honor Rancho	28	1.058	5.7	1.15	5.5	54.49	3.0	26.44
Howard Townsite	21	0.917	4.1	0.82	--	--	21.0	65.31
Hyperion	16	0.800	4.1	0.82	--	--	2.0	7.79
Inglewood	20	0.894	4.1	0.82	48.5	3,245.98	66.0	316.79
Las Cienegas	20	0.894	4.8[b]	0.96	29.6	1,268.09	--	--
Las Llajas	28	1.058	5.7	1.15	--	--	2.0	2.59
Lawndale	16	0.800	4.1	0.82	--	--	4.0	12.93
Long Beach	19	0.872	1.9[d]	0.43	13	2,272.07	354.0	1,019.77
Long Beach Airport	19	0.872	4.1	0.82	--	--	10.0	68.81
Los Angeles Downtown	19	0.872	4.1	0.82	16.8	236.15	2.0	10.54
Los Angeles East	19	0.872	4.1	0.82	--	--	7.0	52.08
Lyon Canyon	28	1.058	5.7	1.15	--	--	2.0	6.55
Montebello	19	0.872	4.1	0.82	3.5	380.95	33.0	150.95
Newgate	21	0.917	4.1	0.82	--	--	2.0	6.02
Newhall	28	1.058	5.7	1.15	--	--	24.0	32.49
Newhall-Potrero	28	1.058	5.7	1.15	3.5	7.13	4.0	26.04

(continued)

[a]Unless noted, regional average RVP used with stack temperature of 107°F to arrive at TVP

[b]ARB data base

[c]KVB data base

[d]Weighted mean of tanks inventoried by KVB

*Average diurnal temperature change for that site

†Temperature change and true vapor pressure correction factors used in emissions modeling procedure

TABLE 5.1-4. (CONTINUED)

Field	ΔT*	$C_{\Delta T}$†	TVP[a]	C_{TVP}†	Tankage (10^3 bbl) With Vapor Recovery	Throughput (10^3 bbl) With Vapor Recovery	Tankage (10^3 bbl) No Vapor Recovery	Throughput (10^3 bbl) No Vapor Recovery
Oak Canyon	28	1.058	5.7	1.15	11.3	157.14	13.0	57.04
Placerita	28	1.058	5.7	1.15	--	--	79.0	299.32
Playa Del Rey	16	0.800	4.1	0.82	--	--	14.0	35.79
Potrero	20	0.894	7.2[b]	1.53	--	--	10.0	91.51
Ramona	28	1.058	5.7	1.15	--	--	16.0	48.58
Rosecrans	19	0.872	4.1	0.82	--	--	60.0	304.55
Rosecrans, East	19	0.872	4.1	0.82	--	--	4.0	5.27
Rosecrans, South	19	0.872	4.1	0.82	--	--	22.0	39.48
Salt Lake	20	0.894	4.1	0.82	5.5	56.02	12.0	136.2
Salt Lake, South	20	0.894	4.1	0.82	3.5	325.34	--	--
San Vincente	20	0.894	4.1	0.82	3.5	524.86	--	--
Sansinena	31	1.114	4.1[b]	0.82	--	--	54.0	492.47
Santa Fe Springs	19	0.872	12.4[b]	4.93	9	618.63	45.0	127.42
Saugus	28	1.058	5.7	1.15	--	--	2.0	2.43
Sawtelle	20	0.894	4.1	0.82	3.5	307.86	--	--
Seal Beach	19	0.872	4.6[b]	0.92	14.8	530.52	26.0	129.08
Tapia	28	1.058	5.7	1.15	--	--	12.0	14.64
Torrance	21	0.917	4.1	0.82	25.6	1,424.57	165.0	504.57
Union Station	19	0.872	4.1	0.82	--	--	5.0	46.49
Venice Beach	16	0.800	4.1	0.82	--	--	7.5	78.35
Wayside Canyon	28	1.058	5.7	1.15	--	--	5.0	39.58
Whittier	19	0.872	4.1	0.82	7	514.16	32.5	252.29
Wilmington	19	0.872	3.2[b]	0.66	449.8	44,687.03	53.0	289.05
Burrel	30	1.095	1.2	0.30	--	--	4.0	6.69
Burrel Southeast	30	1.095	1.2	0.30	--	--	4.0	5.67

(continued)

[a]Unless noted, regional average RVP used with stack temperature of 107°F to arrive at TVP

[b]ARB data base

[c]KVB data base

[d]Weighted mean of tanks inventoried by KVB

*Average diurnal temperature change for that site

†Temperature change and true vapor pressure correction factors used in emissions modeling procedure

TABLE 5.1-4. (CONTINUED)

Field	ΔT*	$C_{\Delta T}$†	TVP[a]	C_{TVP}†	Tankage (10^3 bbl) With Vapor Recovery	Throughput (10^3 bbl) With Vapor Recovery	Tankage (10^3 bbl) No Vapor Recovery	Throughput (10^3 bbl) No Vapor Recovery
Camden	30	1.095	1.2	0.30	--	--	2.0	0.95
Cheney Ranch Gas	27	1.039	1.2	0.30	--	--	2.0	7.12
Coalinga	29	1.077	1.5[c]	0.36	--	--	385.0	6,055.58
Coalinga, East Ext.	29	1.077	1.2	0.30	38.1	2,462.36	2.0	13.31
Five Points	29	1.077	1.2	0.30	--	--	2.0	1.65
Guijarral Hills	29	1.077	9.0[b]	2.14	--	--	8.0	48.85
Helm	30	1.095	1.2	0.30	--	--	45.0	123.42
Jacalitos	29	1.077	1.2	0.30	--	--	18.0	74.36
Kettleman North Dome	29	1.077	1.2	0.30	--	--	23.0	178.82
Kreyenhagen	29	1.077	1.2	0.30	--	--	12.0	3.43
Pleasant Valley	29	1.077	1.2	0.30	--	--	4.0	6.55
Raisin City	27	1.039	1.2	0.30	--	--	48.5	278.37
Riverdale	30	1.095	1.2	0.30	--	--	45.0	133.39
San Joaquin	27	1.039	1.2	0.30	--	--	10.0	14.65
Turk Anticline	29	1.077	1.2	0.30	--	--	2.0	14.97
West Haven	30	1.095	1.2	0.30	--	--	2.0	44.93
King City	33	1.149	3.8	0.77	--	--	18.0	38.02
Lynch Canyon	33	1.149	3.8	0.77	--	--	2.0	0.33
McCool Ranch	33	1.149	3.8	0.77	--	--	2.0	0.26
Monroe Scnell	33	1.149	3.8	0.77	--	--	2.0	11.94
Paris Valley	33	1.149	3.8	0.77	--	--	2.0	3.37
Quinado Canyon	33	1.149	3.8	0.77	--	--	2.0	0.32
San Ardo	33	1.149	3.8	0.77	--	--	244.3	10,824.40
Belmont Offshore	19	0.872	3.8	0.77	7	1,710.43	--	--
Brea-Olinda	30	1.095	4.1	0.82	69	2,416.39	42.0	291.12

(continued)

[a]Unless noted, regional average RVP used with stack temperature of 107°F to arrive at TVP

[b]ARB data base

[c]KVB data base

[d]Weighted mean of tanks inventoried by KVB

*Average diurnal temperature change for that site

†Temperature change and true vapor pressure correction factors used in emissions modeling procedure

TABLE 5.1-4. (CONTINUED)

Field	ΔT*	$C_{\Delta T}$†	TVP[a]	C_{TVP}†	Tankage (10^3 bbl) With Vapor Recovery	Throughput (10^3 bbl) With Vapor Recovery	Tankage (10^3 bbl) No Vapor Recovery	Throughput (10^3 bbl) No Vapor Recovery
Coyote, East	21	0.917	4.1	0.82	--	--	62.1	769.56
Coyote, West	21	0.917	4.1	0.82	28.5	1,093.88	--	--
Esperanza	30	1.095	4.1	0.82	--	--	10.0	19.33
Fleito	26	1.020	1.2	0.30	--	--	6.0	237.40
Roqo Creek	26	1.020	1.2	0.30	--	--	174.0	1,542.18
Railroad Gap	26	1.020	1.2	0.30	3.5	263.83	2.0	5.06
Rio Bravo	26	1.020	0.84[c]	0.23	--	--	28.0	36.45
Rio Viejo	35	1.183	3.0[d]	0.62	22.6	431.27	9.0	73.08
Rosedale	26	1.020	1.2	0.30	--	--	18.0	40.57
Rosedale Ranch	26	1.20	1.2	0.30	--	--	15.0	150.16
Round Mountain	26	1.020	1.5[c]	0.36	--	--	110.0	414.36
San Emidio Nose	33	1.149	1.2	0.30	--	--	11.0	155.46
Semitropic	30	1.095	1.2	0.30	--	--	23.0	138.41
Seventh Standard	26	1.020	1.2	0.30	--	--	4.0	9.17
Strand	26	1.026	1.2	0.30	--	--	24.0	88.98
Tejon	33	1.149	1.2	0.30	--	--	45.5	252.86
Tejon Hills	33	1.49	1.2	0.30	--	--	16.0	46.28
Tejon, North	33	1.149	1.2	0.30	--	--	35.0	188.23
Temblor Hills	30	1.095	1.2	0.30	--	--	2.0	1.02
Temblor Ranch	30	1.095	1.2	0.30	--	--	2.0	6.48
Ten Section	30	1.095	3.6[c]	0.73	--	--	28.0	246.68
Tule Elk	31	1.114	1.2	0.30	--	--	11.3	176.87
Union Ave.	26	1.020	0.73[d]	0.21	--	--	11.3	176.87
Valpredo	30	1.095	1.2	0.30	--	--	2.0	2.49
Welcome Valley	31	1.114	1.2	0.30	--	--	4.0	0.43
Wheeler Ridge	33	1.149	1.2	0.30	5.8	163.83	29.0	316.88
White Wolfe	33	1.149	1.3[d]	0.32	--	--	3.0	26.43
Yowlumne	33	1.149	4.9[d]	0.98	120.3	6,510.77	16.0	90.03

[a]Unless noted, regional average RVP used with stack temperature of 107°F to arrive at TVP

[b]ARB data base

[c]KVB data base

[d]Weighted mean of tanks inventoried by KVB

*Average diurnal temperature change for that site

†Temperature change and true vapor pressure correction factors used in emissions modeling procedure

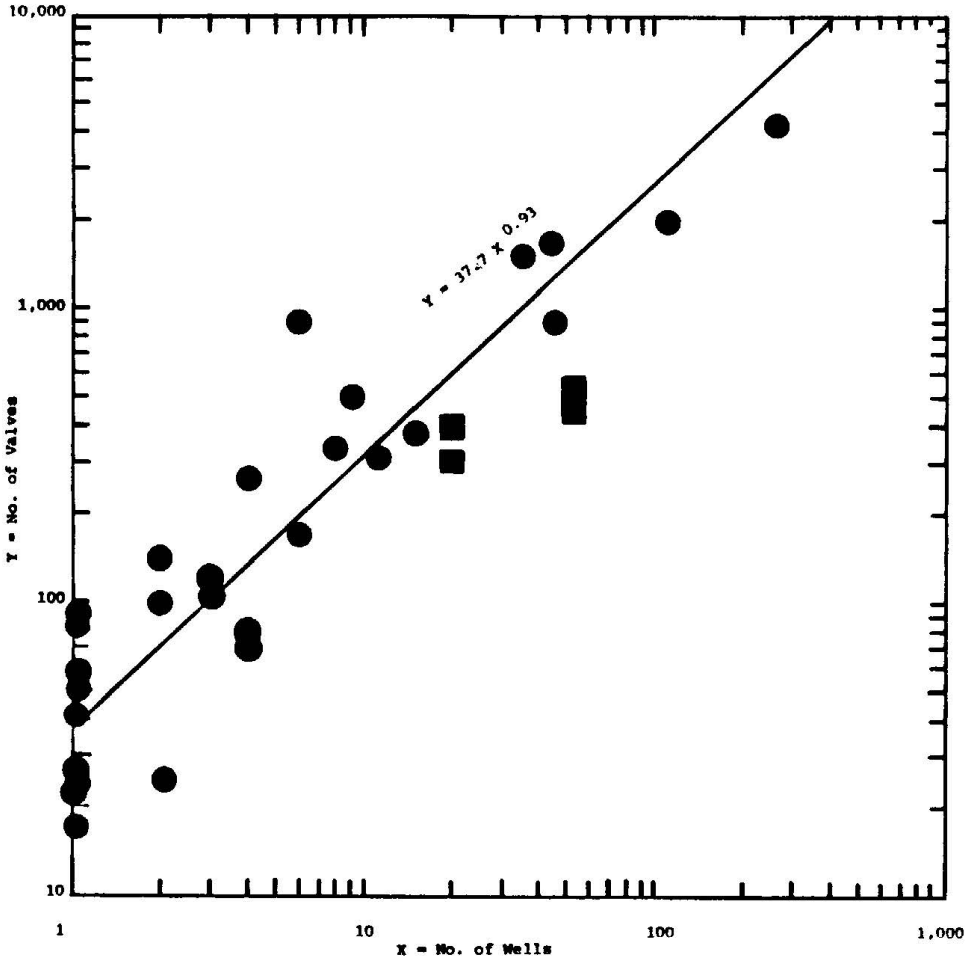

Figure 5.2-1. Number of valves on oil production piping as a function of the number of oil wells.

● Primary Oil Production Sites
■ Tertiary Oil Production Sites

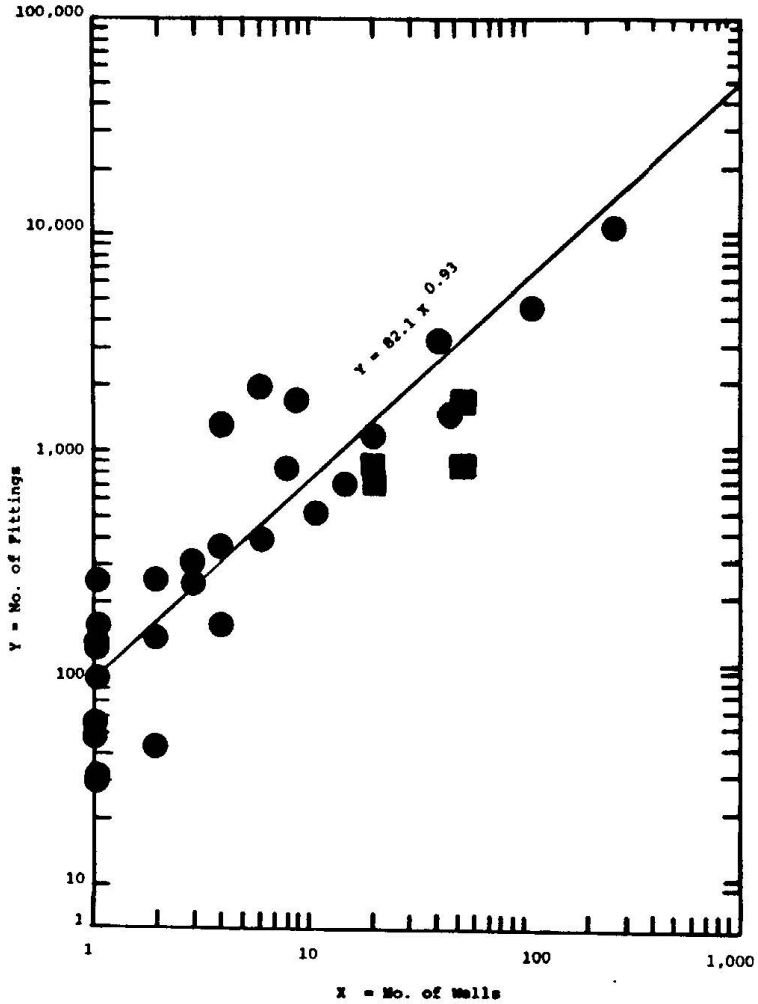

Figure 5.2-2. Number of fittings (non-valves) on oil production piping as a function of the number of oil wells.

● Primary Oil Production Sites
■ Tertiary Oil Production Sites

Data points for the Cymric lease, Kern Front lease and two Kern River leases which were inventoried in the second phase of the program are plotted on the figures as squares. It is interesting to note that all four sites fall below the data trend derived from the primary production sites. One explanation would be that except for Cymric's Midway-Premier lease, no gas is produced at the other sites. Without gas production an entire system of pipe, valves and fittings is missing. Additionally, the wells at these sites were fairly streamlined and were equipped with very few valves or fittings that were not necessary for operation.

In Table 5.2-1 the average number of valves and fittings per well for offshore and onshore production facilities is presented. These are further divided into gas lift, sucker rod, and hydraulic life (KOBE type) wells. Using emissions information developed by coupling KVB's field survey program with emissions factors developed form Rockwell's API report (Ref. 1), average daily emissions per component were obtained.

Table 5.2-2 presents the composite valve and fitting and related daily emissions for tertiary recovery facilities. As noted in Figures 5.2-1 and 5.2-2, the average numbers of valves and fittings per well are significantly less at tertiary recovery facilities than they are at primary recovery facilities. Likewise, the average emissions per component are significantly less due to the reduced API gravity and gas production.

In Table 5.2-3 the total valve and fitting counts and associated composite fugitive hydrocarbon emissions are summarized for the three gas plants surveyed by KVB. As with the data from oil production facilities, these emissions were derived from a coupling of detailed KVB survey data with emission factors developed from Rockwell's API report. While the data presented in this section will be useful to others in preparing emission estimates or forecasts, the user should be aware that they are specific only to the sites surveyed by KVB. Caution must be exercised if these numbers are to be applied to other sites.

TABLE 5.2-1. AVERAGE NUMBER OF VALVES AND FITTINGS PER WELL AND AVERAGE FUGITIVE HYDROCARBON EMISSION FACTORS PER VALVE AND FITTING FOR PRIMARY PRODUCTION FACILITIES

Site	Average No. of Components/Wells				Average Emissions/Component, lb/day			
	Offshore	Onshore		Both	Offshore	Onshore		Composite Wt. Avg.
Component (Fluid)	G.L.	S.R.	H.L.	Wt. Avg.	G.L.	S.R.	H.L.	G.L. + S.R. + H.L.
Valve (Gas)	18.5	4.1	25	7.8	0.194	0.57	0.48	0.44
Fitting (Gas)	35	11.7	70	20	0.033	0.077	0.075	0.067
Valve (Liquid)	21	15.6	42	18.9	0.00151	0.0046	0.0059	0.0043
Fitting (Liquid)	35	36	92	42	0.00034	0.00191	0.00059	0.00145
Valve (Total)	40	19.7	67	27	0.091	0.123	0.181	0.132
Fitting (Total)	70	48	163	62	0.0168	0.021	0.033	0.023

Component Data Source: Extracted from KVB field survey data program conducted for California Air Resources Board

Key

- G.L. - Gas Lift Wells Plus Tank Setting
- S.R. - Sucker Rod Plus Tank Setting
- H.L. - Hydraulic Lift Plus Tank Setting

TABLE 5.2-2. AVERAGE NUMBER OF VALVES AND FITTINGS PER WELL AND AVERAGE FUGITIVE HYDROCARBON EMISSION FACTORS PER VALVE AND FITTING FOR TERTIARY RECOVERY FACILITIES

Recovery Phase	Component (Fluid)	Average Number of Components/Well	Average Emissions/ Component, lb/day
Tertiary (Steam)	Valve (Gas)	0.037	0.32
	Fitting (Gas)	0.102	0.070
	Valve (Liquid)	6.7	0.0030
	Fitting (Liquid)	15.2	0.0012
	Valve (Total)	6.75	0.0048
	Fitting (Total)	15.3	0.0017

Component Data Source: Extracted from KVB field survey data program conducted for California Air Resources Board

TABLE 5.2-3. GAS PLANT VALVE AND FITTING EMISSIONS

Valves Counted	1,727
Fittings Counted	3,503
Valve Emissions (lb/day)	1,099
Fitting Emissions (lb/day	234
Average Daily Emissions	
Per Valve	0.64
Per Fitting	0.067

Basis: Three Gas Plants

5.3 THERMALLY ENHANCED OIL RECOVERY

Thermally enhanced oil recovery facilities for which KVB estimated emissions include those with cyclic steam, steam flooding and fire flooding operations. Emission sources specific to those operations include steamers and well vents for cyclic or steam flood operations and compressors, downhole combustion and well vents for fire flooding operations.

Steamers were inventoried by KVB on the basis of million Btu/hr per field. This was consistent with the emission factor used in the computer program. As found with many of the other oil field related emission sources, no single comprehensive steamer inventory existed for California. KVB pieced together data from many sources to obtain the steamer distribution presented in Table 5.3-1. Data was obtained from the ARB, APCD's, DOG, and an oil field steam generator vendor. For a few fields KVB had to use engineering judgment to determine the field steamer heat rates.

Fire flood emissions were determined on the basis of total incremental oil produced per oil field by fire flooding. Data on field production rates were obtained from the DOG annual report (Ref. 6) and from the DOG district offices. Incremental oil production by field is presented in Table 5.3-2.

As described in Section 6.0 the primary fugitive hydrocarbon emission point for both steam drive and cyclic steam wells is the casing vent. To control the emissions and recover product, many operators have installed vapor

TABLE 5.3-1. 1979 CALIFORNIA TERTIARY OIL RECOVERY STEAM GENERATORS

Field	County	Type of Operation[1]	Rated 10^6 Btu/hr	Fuel
Arroyo Grande	San Luis Obispo	Cyclic	300[3]	Oil
Belgian Anticline	Kern	Cyclic	18[3]	Oil
Belridge, North	Kern	Cyclic	168[3]	Oil
Belridge, South	Kern	Cyclic, Steam Flood	2443[2]	Oil
Brea-Olinda	Orange	Cyclic, Steam Flood	72[3]	Oil
Buena Vista	Kern	Cyclic	54[3]	Oil
Casmalia	Santa Barbara	Cyclic	54[3]	Oil
Cat Canyon	Santa Barbara	Cyclic, Steam Flood	100[3]	Oil
Coalinga	Fresno	Cyclic, Steam Flood	1258[1]	Oil
Cymric	Kern	Cyclic, Steam Flood	250[2]	Oil
Edison	Kern	Cyclic, Steam Flood	97[2]	Oil
Fruitvale	Kern	Cyclic	55.2[2]	Oil
Guadalupe	San Luis Obispo	Cyclic	500[3]	Oil
Huntington Beach	Orange	Cyclic	18[4]	Oil
Kern Bluff	Kern	Cyclic, Steam Flood	125[2]	Oil
Kern Front	Kern	Cyclic, Steam Flood	1096.2[2]	Oil
Kern River	Kern	Cyclic, Steam Flood	17980.5[2]	Oil
Lost Hills	Kern	Cyclic, Steam Flood	624[2]	Oil
McKittrick	Kern	Cyclic, Steam Flood	987[2]	Oil
Midway-Sunset (Kern Co. portion only)	Kern	Cyclic, Steam Flood	5990[2]	Oil
Mount Poso	Kern	Cyclic, Steam Flood	400[2]	Oil
Newport, West	Orange	Cyclic, Steam Flood	18[3]	Oil
Oxnard	Ventura	Cyclic	17[5]	Gas
Placerita	Los Angeles	Cyclic	36[3]	Gas
Poso Creek	Kern	Cyclic	300[3]	Oil
Railroad Gap	Kern	Cyclic, Steam Flood	118[3]	Oil
San Ardo	Monterey	Cyclic, Steam Flood	2450[3,6]	Oil
Santa Maria Valley	Santa Barbara	Cyclic	17[5]	Gas
Tapo Canyon, South	Ventura	Cyclic	18[4]	Oil

(continued)

TABLE 5.3-1. (CONTINUED)

Field	County	Type of Operation[1]	Rated 10^6 Btu/hr	Fuel
Tejon	Kern	Cyclic	18[4]	Oil
Wheeler Ridge	Kern	Steam Flood	25[3]	Oil
Wilmington	Los Angeles	Cyclic	50[3]	Gas[4]
Yorba Linda	Orange	Cyclic, Steam Flood	36[3]	Oil

(1) From: 65th Annual Report of the State Oil and Gas Supervisor for the Year 1979, California Division of Oil and Gas.

(2) California Air Resources Board Kern County Steam Generator Inventory - Field Apportionment by KVB.

(3) Estimate by oil field steam generator vendor.

(4) Engineering judgment estimate.

(5) Information provided by Ventura County APCD.

(6) Data from California Air Resources Board Emission Data System.

TABLE 5.3-2. INCREMENTAL PRODUCED AS A RESULT OF FIRE FLOODING

Oil Field[1]	Oil Produced by Fire Flood/BBLS[2]
Brea - Olinda	79,000
Newport West	432,000
Parris Valley	4,000
Russell Ranch	Not in Operation
San Ardo	642,000
Belridge South	1.5 mil
Lost Hills	200,000
Midway Sunset	500,000

[1]Source: 65th Annual Report of the State Oil and Gas Supervisor, California Division of Oil and Gas, 1979, Publication PR06

[2]Source: California Division of Oil and Gas - 1979 Basis

recovery systems. Table 5.3-3 lists the drive wells, cyclic steam wells and control system efficiencies by field as identified by ARB and Kern County APCD surveys. Table 5.3-4 identifies fields with steaming operations underway which were not included in the ARB or Kern County surveys. The number of cyclic wells in Table 5.3-4 were obtained from the DOG annual report. The DOG data are considered less accurate due to some inconsistencies in the classification of wells as either cyclic or steam drive. Additionally, the DOG only classifies cyclic wells which are steamed and produced in the same year. If a well is steamed less frequently or not at all in a given year, it may not be listed by DOG. The last column of each table lists the daily VOC emissions from each field. It should be noted that these emission data were received too late to be included in the project computer program.

5.4 HEATER TREATERS AND BOILERS

With the exception of confidential information provided KVB, the field-by-field heater treater heat rates used in this program are presented in Table 5.4-1. As with many of the oil field emission sources there is little, good comprehensive population data available. Because of the rapid growth of heavy oil production most of the information which is available is for Kern County. However, there is still some uncertainty as to the numbers and location of units even in Kern County.

The boiler population data are presented in Table 5.4-2. As with the heater treaters, there is considerable uncertainty as to how many units are actually in service. It should be noted that a number of these units are grandfathered or pre-permit program emission sources, so it would be difficult for an agency to identify and quantify these combustion sources.

5.5 I.C. ENGINES

A field-by-field population of I.C. engines was used to estimate associated emissions. As mentioned earlier, this population count was provided as confidential information and is not included in this report. I.C. engines used in the oil fields are generally too small to be adequately covered by APCD surveys, so data from these sources were generally

TABLE 5.3-3. POPULATION AND WELL VENT VOC EMISSIONS OF STEAM ENHANCED CRUDE OIL PRODUCTION WELLS[1]

County	Field	Operator	Drive Wells C*	Drive Wells U/C†	Cyclic Wells C*	Cyclic Wells U/C†	Control %	VOC[2] Emissions lb/day
Fresno[4]	Coalinga		192	153	0	191	90[3]	38,623
Monterey[4]	San Ardo		448	0	0	60	100	216
Santa Barbara[4]	Cat Canyon		6	0	422		100	0
	Santa Maria Valley		0	0	0	65	100	234
	Casmalia		0	0	43		100	
San Luis Obispo[4]	Guadalupe		0	0	158	0	100	0
Orange[4]	Yorba Linda		14	247	62	76	90[3]	55,018
	Huntington Beach		0	0	0	50		280
Ventura[4]	Shiells Canyon		19	0	0	0	90[3]	419
Kern[5]	Belridge	Chevron	0	0	0	28	0	101
		Kern Ridge	41	1470	0	66	99	324,169
		Mobil	39	72	0	157	100	16,427
		Union	12	0	23	0	90	273
			92	1542	23	251		340,970
	Cymric	Chevron	56	6	0		99	1,445
		Getty	0	0	0	70	0	252
		Gulf	0	0	0	16	0	58
		Mobil	0	0	0	45	0	162
			56	6	0	131		1,917
	Edison	Bell Western	0	0	0	12	0	43
		Chevron	12	0	0	53	50	1,513
		Emjayco	0	0	0	3	0	11
		Exxon	0	0	35	123	100	443
			12	0	35	191		2,010
	Fruitvale	Gulf	0	0	26	0	85	14

*Number of wells connected to vapor recovery systems.
†Uncontrolled

(continued)

TABLE 5.3-3. (CONTINUED)

County	Field	Operator	Drive Wells C*	Drive Wells U/C*	Cyclic Wells C*	Cyclic Wells U/C†	Control %	VOC (2) Emissions lb/day
Kern (Cont)	Kern Bluff	Energy Development	0	0	0	10	0	36
		Gulf	4	0	18	2	93	73
			4	0	18	12		109
	Kern Front	Arco	2	0	42	0	100	0
		Carrec	0	0	0	21	0	76
		Getty	0	0	0	97	0	349
		Mobil	0	0	0	40	0	144
		Petro-Lewis	0	36	0	82	0	8,226
		Santa Fe	0	0	0	14	0	50
		Whittier	0	0	0	9	0	32
			2	36	42	263		8,877
	Kern Front Poso	Chevron	19	0	78	0	98	89
	Kern River	Chevron	493	6	38	149	28	80,154
		Getty	2109	0	638	237	97	14,860
		Petro-Lewis	27	0	0	26	100	94
		Santa Fe	0	41	0	136	0	9,522
		Shell	0	0	0	608	0	2,189
		Sun Production	0	3	16	13	100	708
		Tenneco	0	189	0	36	0	41,766
			2629	239	692	1205		149,293
	Lost Hills	Getty	27	0	0	40	93	560
		Gulf	74	0	61	1	93	1,160
			101	0	61	41		1,720
	McKittrick	Chevron	64	0	0	140	60	6,144
		Circle	22	0	0	0	75	1,212
		Getty	0	0	0	603	0	2,171
		McFarland	0	0	0	4	0	14
		Occidental	0	0	0	5	0	18
		Texfel	0	16	0	0	0	3,525
		Union	17	0	0	42	90	526
			103	16	0	794		13,610

(Continued)

TABLE 5.3-3. (CONTINUED)

County	Field	Operator	Drive Wells C *	Drive Wells U/C *	Cyclic Wells C *	Cyclic Wells U/C †	Control %	VOC (2) Emissions lb/day
Kern (Cont)	Midway Sunset	Arco	0	52	0	195	0	12,158
		Berry Holding	0	0	139	449	100	1,616
		Chevron	90	0	0	437	99	1,771
		Exeter	0	0	0	50	0	180
		Gen. American	0	0	16	20	100	72
		Getty	84	0	0	219	91	2,454
		Gulf	0	0	28	4	93	21
		McCulloch	0	0	0	140	0	504
		McFarland	0	0	0	44	0	158
		Mobil	0	0	0	330	0	1,188
		Occidental	0	0	0	52	0	187
		Santa Fe	95	68	84	889	90	20,304
		Shell	0	239	0	376	0	54,005
		Sun Production	0	35	0	254	0	8,625
		Tannehill	0	0	147	0	100	0
		Tenneco	0	152	0	103	0	33,856
		Texaco	0	8	0	38	0	1,899
		Union	39	0	54	96	90	1,224
		Whittier	0	0	0	122	0	439
			308	554	468	3818		140,661
	Mount Poso	Shell	0	257	0	0	0	56,617
	Poso Creek	Getty	0	0	0	76	0	274
		Petro-Lewis	0	0	37	15	100	54
			0	0	37	91		328
	Temblor Valley	Chevron	0	0	0	3	0	11

(1) Population data supplied by California Air Resources Board unless noted.
(2) Emission Factor Source: Assessment of VOC Emissions from Well Vents Associated with Thermally Enchanced Oil Recovery, EPA Report EPA-909/9-81-003, September 1981.
(3) Estimate by KVB.
(4) Population of steam enhanced crude oil production wells at end of 1980.
(5) Population of steam enhanced crude oil production wells at end of 1979.
* Number of wells connected to vapor recovery systems
† Uncontrolled

TABLE 5.3-4. POPULATION AND WELL VENT VOC EMISSIONS OF STEAM ENHANCED CRUDE OIL PRODUCTION WELLS NOT COVERED BY AIR RESOURCES BOARD COUNT AT END OF 1979[1]

County	Field	Drive Wells		Cyclic Wells		% Control[2]	VOC[3] Emissions lb/day
		Controlled	Uncontrolled	Controlled	Uncontrolled		
San Luis Obispo	Arroyo Grande	0	0	15	0	100	0
Ventura	Oxnard	0	0	15	1	0	4
	Tapo Canyon, South	0	0	0	1	0	4
Los Angeles	Placerita	0	0	0	2	0	7
	Wilmington	0	0	0	2	0	7
Orange	Brea-Olinda	(4)	(4)	0	2	0	7
	Newport, West	(4)	(4)	0	4	0	14
Kern	Belgian Anticline	0	0	0	1	0	4
	Belridge, North	(4)	(4)	0	2	0	7
	Buena Vista	0	0	0	1	0	4
	Railroad Gap	(4)	(4)	0	1	0	4
	Tejon	0	0	0	1	0	4
	Wheeler Ridge	(4)	(4)	0	0	0	(4)
	Edison, Northeast	(4)	(4)	0	6	0	22

(1) Field identification and well counts from: 65th Annual Report of the State Oil and Gas Supervisor, 1979, California Division of Oil and Gas, Publ. No. PR06.

(2) KVB estimate.

(3) Emission factor source: Assessment of VOC Emissions from Well Vents Associated with Thermally Enhanced Oil Recovery, EPA Report EPA-909/9-81-003, September 1981.

(4) Wells in production not determined.

TABLE 5.4-1. HEATER TREATER POPULATION BY HEAT INPUT RATE

Field	County	Fuel	Heat Input Rate (10^6 Btu/Hr)
Belridge, South	Kern	Oil	138.6[a]
Cymric	Kern	Gas	11.3[a]
Kern Front	Kern	Oil	42.0[a]
Kern River	Kern	Oil	61.4[a]
Lost Hills	Kern	Oil	4.2[a]
Midway Sunset	Kern/San Luis Obispo	Oil Gas	505.6[a] 9.0[a]
Mount Poso	Kern	Oil	16.8[a]
Poso Creek	Kern	Oil	12.6[a]
Rincon Offshore Facility	Ventura	Gas	41.7[b]
Rio Viejo	Kern	Gs	1.38[b]
Lompoc	Santa Barbara	Gas	0.5[b]
Big Mountain	Ventura	Gas	0.3[b], 1.17[b]
Santa Clara Ave.	Ventura	Gas	3.35[b]
White Wolf	Kern	Gas	2.0[b]

[a]Derived from data supplied by CARB Stationary Source Control Division

[b]From KVB Field Survey Program

TABLE 5.4-2. BOILER POPULATION BY HEAT INPUT RATE

Field	County	Fuel	Heat Input Rate[a] (10^6 Btu/Hr)
Belridge South	Kern	Oil	6.3
Cymric	Kern	Gas	3.5
		Oil	7.8
Fruitvale	Kern	Oil	21.35
Kern Bluff	Kern	Oil	5.46
Kern Front	Kern	Gas	1.5
		Oil	33.78
Kern River	Kern	Oil	285.3
Midway Sunset	Kern	Oil	44.78
Mount Poso	Kern	OIl	3.92
Poso Creek	Kern	Oil	3.5
Pyramid Hills		Oil	1[b]
Rincon Island	Ventura	Gas	2.3[b]

(a) Derived from data supplied by CARB Stationary Source Control Division.
(b) Identified during KVB field survey program.

unavailable. It is believed that these data represent the most comprehensive information available.

5.6 DRILLING RIGS

Table 5.6-1 indicates the oil well drilling activity in 1979. This table represents the three major oil producing regions of the state which encompass the eight study counties. It can be seen that most of the drilling activity has taken place in the San Joaquin Valley region and that the average well depth in this region is the most shallow.

The results of KVB's drilling rig survey are presented in Table 5.6-2. To be consistent with Table 5.6-1, the well data was distributed by the three areas. The average well depths for these representative wells differed considerably from the average depths of all drilled wells so no direct correlation could be made between the two tables.

Well depth for all the survey wells was plotted against days on stream in Figure 5.6-1 and fuel consumed per day in Figure 5.6-2. Intuitively, more data scatter would be expected because of varying depths, formation types, rigs, and operational constraints. However, reasonable correlations between well depth and days on stream and fuel consumed per day were obtained.

Drilling rigs in California are powered by diesel fuel, gas, and electricity. Table 5.6-3 presents the power source distribution by horsepower for the three regions.

From the average depth per well in Table 5.6-1, the days on stream in Figure 5.6-1, fuel consumed per day in Figure 5.6-2, and the power source distribution of Table 5.6-3, an estimate of annual drilling rig emissions was obtained using appropriate emission factors from AP-42 (Ref. 4). The emissions are presented in Table 5.6-4.

The emissions data are presented in this section of the report and have not been entered into the computer program since they were calculated on a regional rather than a field basis. The computer program only accepts field basis data. As mentioned earlier, surveying drilling activity on a regional basis more properly defines the significance of overall drilling activity.

TABLE 5.6-1. TOTAL FOOTAGE DRILLED IN 1979 BY REGION

Source: Munger Oilogram - Annual California and Alaska Oil and Gas Review - 1979

	Wells	Total Depth Drilled (ft)
San Joaquin Valley		
Dry Holes	142	656,048
Producing	1,276	2,735,831
	1,418	3,394,573
Average Well Depth		2,394
Coastal Area (Non-Offshore)		
Dry Holes	35	164,455
Producing	259	716,832
	294	881,287
Average Well Depth		2,998
Los Angeles Basis		
Dry Holes	11	52,423
Producing	120	351,080
	131	403,503
Average Well Depth		3,080

TABLE 5.6-2. DRILLING RIG DATA OBTAINED FOR TYPICAL WELLS FROM KVB DRILLING RIG SURVEY

Area	Feet Drilled	Days On Stream	Fuel Consumed Per Day	Total Fuel Consumed
San Joaquin				
Sunset[a]	1,845	5	200 gal	1,000
Kern[b]	2,500	15	200 gal	3,000
Fresno[c]	7,500	6	600 gal	3,600
San Benito[c]	2,500	3	200 gal	600
Kern[d]	1,700	1-4[g]	350 gal	700
Kern[d]	2,500	1-4[g]	300 gal	600
Kern[d]	2,000	1-4[g]	250 gal	500
Kern[d]	7,000	25	500 gal	12,500
	27,545	60	2,600 gal	22,500
$\bar{x}$ =	3,443			
Los Angeles				
Wilmington[e,d]	4,000	15	300 gal	4,500
La Habra[e,d]	8,000	50	650 gal	32,500
Los Angeles[c]	8,000	42	650 gal	27,300
	20,000	107	1,600 gal	64,300
$\bar{x}$ =	6,667			
Coastal				
Ventura[f]	10,000	45 days	900 gal	40,500
Oxnard[e,d]	13,000	70	1,000 gal	70,000
	23,000	115	1,900 gal	110,500
$\bar{x}$ =	11,500			

[a]Lloyd Drilling Co.

[b]Brea Drilling Co.

[c]Gary Drilling Co.

[d]WOGA

[e]Chevron USA

[f]Challenger Drilling Co.

[g]For comparison purposes, these wells were assumed to require two days on stream

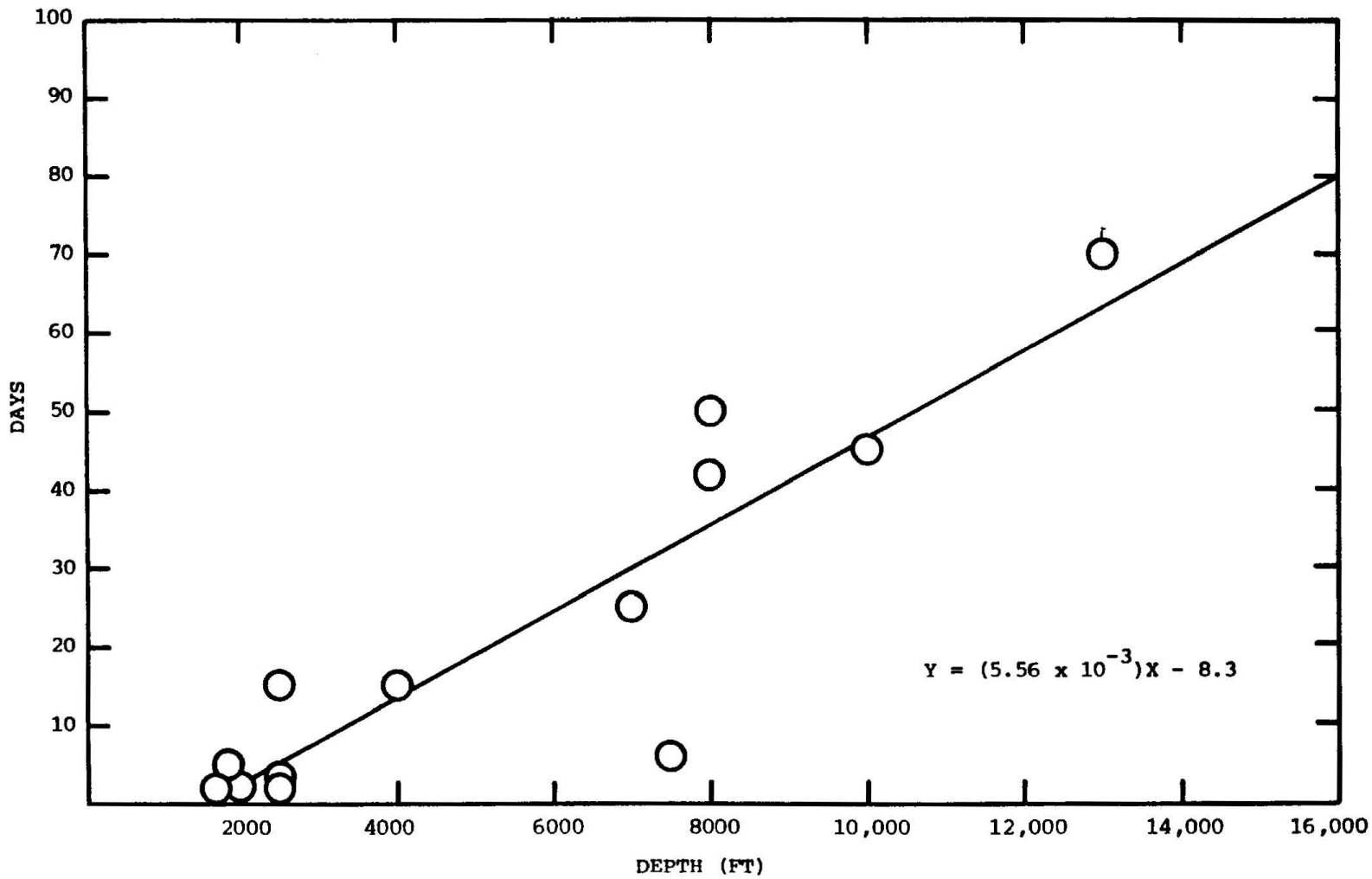

Figure 5.6-1. Drilling rigs - Days on stream
Depth vs. Time

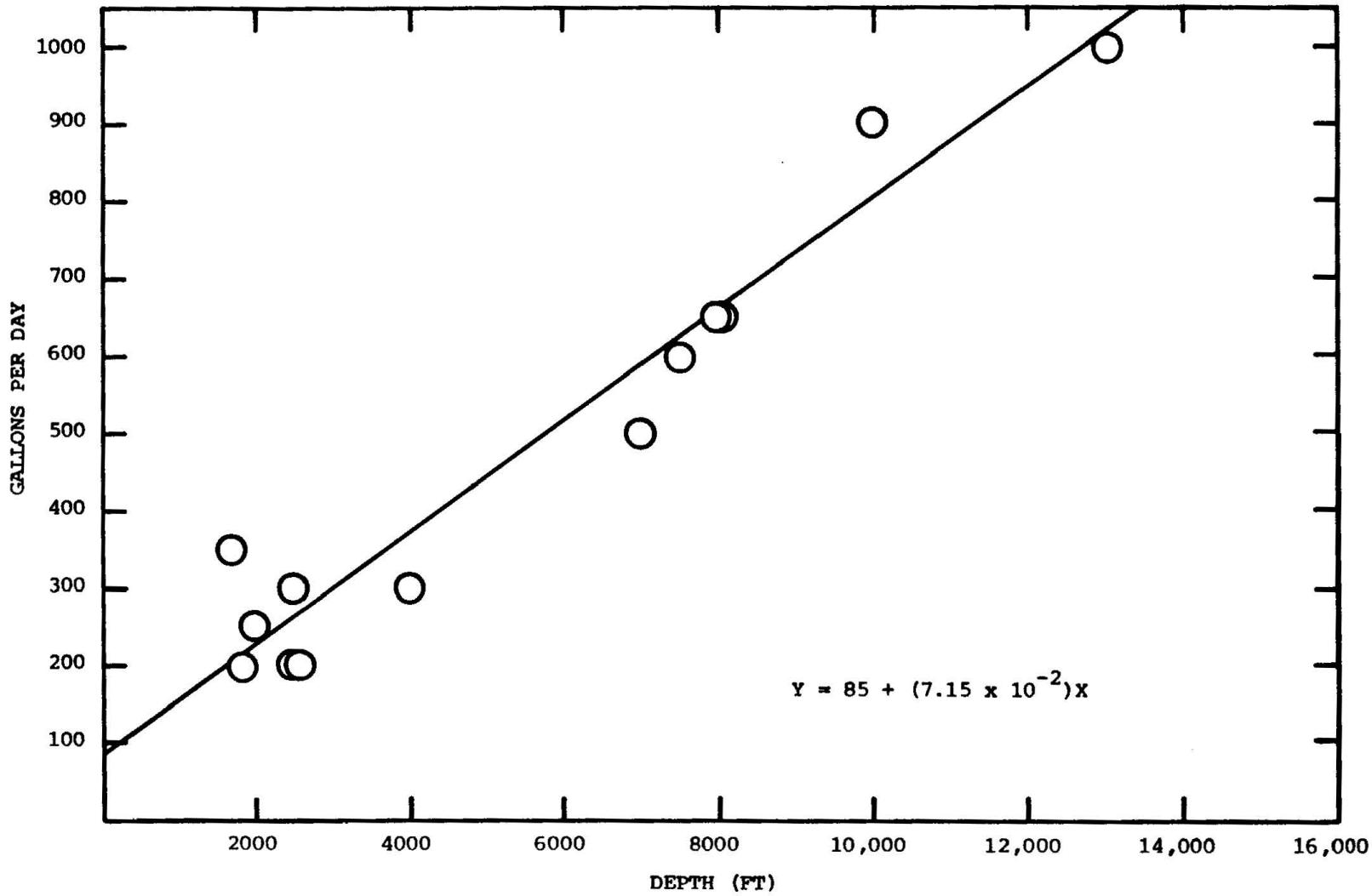

Figure 5.6-2. Diesel drilling rigs depth of hole versus gallons diesel fuel per day.

The regional approach to expressing drilling rig emissions was deemed appropriate for two reasons. First, the data received from the survey was more compatible with the regional approach. Second, not all drilling activity occurs within the confines of a specific field. Drilling can occur around the periphery of a field as attempts are made to extend the producing areas or to discover new pools. Additionally, a significant amount of "wildcatting" can occur in areas far removed from a defined oil field.

TABLE 5.6-3. DRILLING RIG POWER PLANT ENERGY DISTRIBUTION

Region	Diesel %	Gas %	Electric %
San Joaquin Valley	84.5	15.5	0
Coastal	74.1	25.9	0
Los Angeles Basin	72.7	10.5	16.8

TABLE 5.6-4. POLLUTANT EMISSIONS FROM DRILLING RIGS IN 1979

		(Metric Tons/Yr)				
		NO_x	SO_x	CO	THC	Particulates
San Joaquin Valley						
	Diesel	331	22	72	26	24
	Gas	59	(a)	7	24	NA[b]
Coastal Area						
	Diesel	111	7	24	9	8
	Gas	38	(a)	5	16	NA[b]
Los Angeles Basin						
	Diesel	53	4	12	4	4
	Gas	8	(a)	1	3	NA[b]
		600	33	121	82	36

Emission Factor Source: AP-42 Tables 3.3.2-1 and 3.3.3-1

[a] Less than one metric ton

[b] Emission factor not available in AP-42

SECTION 6.0

EMISSION FACTORS

In the preparation of the statewide inventory of emissions from oil production operations, the methodology, as discussed in greater detail in Section 3.0, involved the inventorying of oil production hardware in the state, followed by the application of appropriate emission factors to each of those items of equipment included in the inventory. This section deals with the development of those emission factors and presents the values used in the preparation of the computerized emission inventory.

Emission factors are developed for specific applications depending on how much is known about the source. If a valve has been enclosed with a polybag and the emissions measured, the lb/day of emissions of that valve can be stated. Similarly, if a statistical sample of those valves are tested, it is possible to develop an emission factor for that sample population which is applicable to all valves of that type, flowing the same product, with the same level of maintenance, etc. If a number of different valve types with different products, levels of maintenance, etc., are tested, then it might be possible to develop a more universally applicable emission factor that can be applied to any assorted collection of valves.

If a number of facilities (e.g., oil field) are characterized as to their equipment, it may be possible to characterize the number of valves in a typical facility as a function of a size-related factor, such as throughput rate. Using the universal emission factor for valves and knowing the number of valves per oil field, it is possible to develop a valve emission factor for that type of facility in terms of pounds of emissions per unit of throughput (e.g., bbl./day). Similarly, if universal emission factors for fittings, pumps, compressors, tanks, etc., are available and the numbers of those components per unit of throughput are known, then a universal emission factor for the entire oil field can be developed in terms of pounds of pollutant per unit of throughput.

On this program, KVB inventoried oil field equipment, measured emissions from selected equipment and used available data from the literature in order to prepare the emission factors for this program. In most instances the hydrocarbon emissions have been calculated based on a publication by the American Petroleum Institute (Ref. 1). Other publications used were the EPA's AP-42 (Ref. 4), KVB's hydrocarbon report to the ARB (Ref. 12), KVB's tertiary oil report to ARB (Ref. 2), and Radian's well vent report to the EPA (Ref. 3).

The API report needs some explanation because of its universal use. The report was prepared by Rockwell based on their extensive measurement of hydrocarbon emissions from onshore and offshore operations. They developed emission factors in lb/day units for fundamental pipeline components, such as various types of valves, connections ((i.e., threaded, flanged, gasket, etc.), seals (i.e., reciprocating, rotating, etc.), hatches, diaphragms, etc., as well as transmission product groups, such as dry gas, wet gas, propane, glycol, etc.

The data in the API report are not readily useful in the form presented. Usually they must be aggregated to derive a specific emission factor for a component. The data were deliberately presented in this form to eliminate confusion and provide flexibility. For example, to derive an emission rate for a typical globe valve with flanged fittings attaching it to the pipeline, it is necessary to add the emissions from the globe valve stem together with the emissions for two flanged fittings. To determine the emission factor for a reciprocating compressor, for example, it is necessary to add up emissions of:

- 2 reciprocating shaft seals
- 2 clearance head packings
- 20 threaded connections
- 28 flat faced flange connections
- 2 relief valves
- 3 globe valves

The emission factors developed for the computer program, which prepares the statewide inventory, are based on various facility or throughput units. For example, oil field valve emissions are based on the number of wells in a lease. Storage tank emissions are based on total tankage volume and annual throughput. Gas plant emissions are based on cubic feet of gas per day throughput. The means of aggregating the fundamental emissions factors to develop the gross emission factors are explained below. All emission factors were computed in terms of lb/day per unit of throughput or equipment. The computer converted the units of lb/day to metric tons/year, which are the units specified by ARB for the inventory.

A summary of emission factor bases is as follows:

Process	Throughput/Equipment Basis
Valves & Fittings	No. of Wells
Well Heads & Cellars	No. of Wells
Pumps & Compressors	No. of Wells
Sumps, Pits & Separators	No. of Wells
Well Vents - Steam Flooding	No. of Wells
IC Engines	No. of Engines
Heaters & Heater Treaters	Million Btu/hr
Steamers & Boiler	Million Btu/hr
Gas Compressors & Well Vents In Fireflood Service	Thousand Barrels/year
Tanks	Thousand Barrels/year Oil Production Rate Capacity in Thousand Barrels
Gas Plants	Million Cubic Feet/day

6.1 OIL FIELD FACTORS

Oil field emission factors were compiled for the processes listed above to characterize emissions from typical oil field operations. Fugitive emissions from sources such as sumps, pits, valves, fittings and pumps were primarily derived from the Rockwell report (Ref. 1). Combustion derived emission factors were obtained from AP-42 (Ref. 4), KVB's field test program, and KVB's TEOR report (Ref. 2). Tank emissions were determined using simplified emission factors for working and breathing loss that were statistically derived from AP-42 (Ref. 4).

6.1.1 Valves and Fittings

KVB developed fugitive hydrocarbon emission factors for various valve and fitting types by applying the building block approach to detailed mechanical joint emissions data presented in the API report, Tables M-1 and M-2. The use of this approach for valves and pumps is illustrated in Figure 6.1-1.

As previously mentioned, this approach provided a great deal of flexibility so that a large number of total emission factors could be developed for different valve and fitting types commonly found in onshore and offshore, gas, light and heavy crude, condensate, and gas/oil/water (mixture) service.* Presented in Table 6.1-1 is one example of a typical KVB valve and fitting worksheet which illustrates how these total emission factors were ultimately used to determine the emissions for a lease site. Note the data recorded in the right hand column which summarizes the total number of valves and fittings counted as well as their emissions.

---

*It should be noted that at present there are no heavy crude valve and fitting emission factors developed from a comprehensive study such as that performed by Rockwell for API. Therefore, a conservative approach was taken using the available API emission factors.

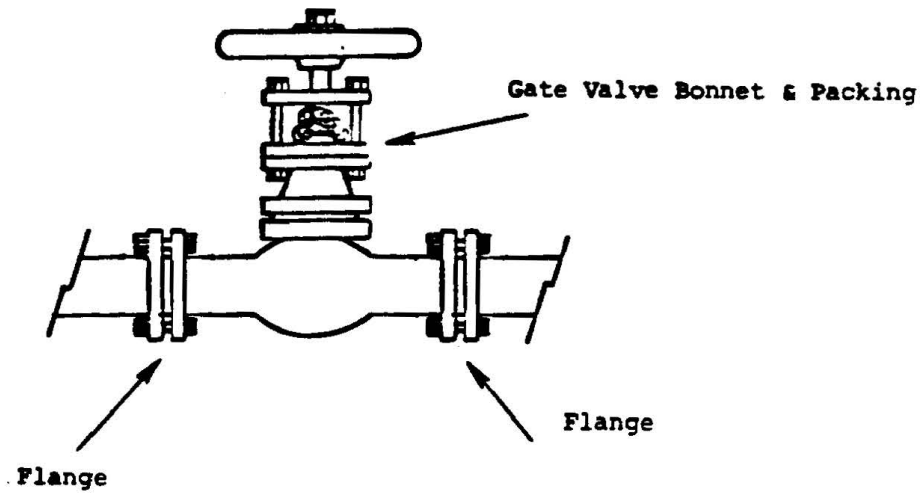

Gate Valve Bonnet and Packing for Light Crude	$= 3.5 \times 10^{-5}$
2 Flanges for Light Crude	$= 8.82 \times 10^{-10}$
Total Emission Factor	$= 3.5 \times 10^{-5}$ lb/day

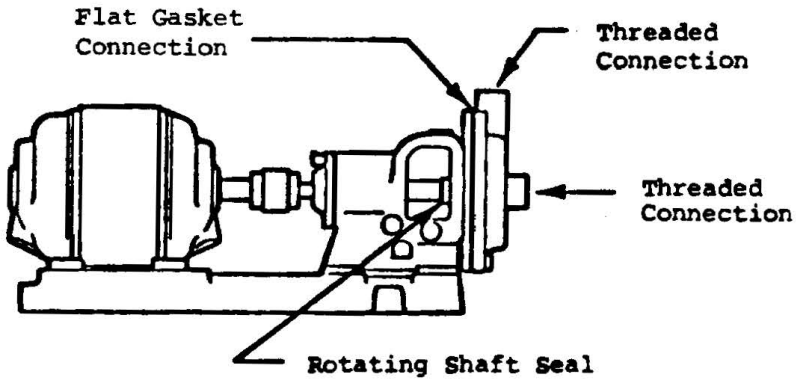

Screwed End Rotating Shaft Pump

Flat Gasket Connection for Light Crude	$= 2.61 \times 10^{-8}$
2 Threaded Connections for Light Crude	$= 3.64 \times 10^{-9}$
Rotating Shaft Seal for Light Crude	$= 1.41 \times 10^{-1}$
Total Pumping Emission Factor	$= 1.41 \times 10^{-1}$ lb/day

Figure 6.1-1. Examples of Emission Factor Building Block Approach

TABLE 6.1-1. TYPICAL KVB VALVE AND FITTING WORKSHEET

Component Type (CW) Style	No. Of Components In Gas Service	THC Rockwell Prediction Factors lbs/day	THC Emission Rate lbs/day	No. Of Components In Mixture Service	THC* Rockwell Prediction Factors lbs/day	THC Emission Rate lbs/day	Comments
VL (THRD)							Totals for Site:
Gate		0.493E + 00			0.851E - 02		Valves:
Plug		0.195E + 00			0.359E - 02		Gas _____
Ball		0.943E - 01			0.223E - 02		Oil _____
Check		0.148E + 00			0.291E - 02		Total _____
Butterfly		0.658E - 01			0.185E - 02		Fittings:
Needle		0.152E + 00			0.298E - 02		Gas _____
Choke		0.121E + 01			0.191E - 01		Oil _____
Bean		0.658E - 01			0.185E - 02		Total _____
Relief		0.355E - 01			0.959E - 03		Emissions: (lb/day)
Flow Control		0.656E + 00			0.215E - 02		Valves _____
Press. Reg.		0.658E - 01			0.185E - 02		Fittings _____
Globe		0.552E + 00			0.884E - 02		Well Cellars_____
SM Relief #		0.672E + 01			0.332E + 00		Well Heads _____
Subtotal:							Pumps _____
							Compressors _____
VL (WLD)							Sumps _____
Ball		0.285E - 01			0.381E - 03		Tanks _____
Plug		0.129E + 00			0.175E - 02		
Check		0.820E - 01			0.106E - 02		Totals _____
Subtotal:							

* Source: API Report, Table M-1; Emission Factor = Component plus connections
† No leaks observed for valves
No predictions for valves
Applicable only to relief valves open ended to the atmosphere. Do not include in valve count.

6.1.2 Well Heads, Well Cellars, Pits, Sumps, and Separators

The fugitive hydrocarbon emission factors used for well heads were obtained directly from the API report. The emission factors are as follows:

Emission Factor, lb/day/well head		
Fluid	Onshore	Offshore
Gas	4.24	0.412
Heavy Crude	No Prediction	No Prediction
Light Crude	1.73	0.155
Condensate	0.151	0.0130
Mixtures	2.93×10^{-3}	2.15×10^{-4}

Emission factors used for well cellars and sumps were also obtained directly from the API report. The emission factors expressed in units of $lb/day/ft^2$ area are as follows:

Emission Factor, $lb/day/ft^2$		
Fluid	Onshore	Offshore
Gas	No Prediction	No Prediction
Heavy Crude	No Prediction	No Prediction
Light Crude	0.634	7.94
Condensate	No Prediction	No Prediction
Mixtures	0.0997	1.95
Water	0.0162	0.202

The discharge from free water knockouts and heater treaters in sumps was expressed as water. Contents of open top gauge tanks were expressed as mixtures.

The emission factor used for mechanical oil-water separators was developed using the building block approach. The typical separator found in

the oil field had four skimmers driven by four separate electric motors. The fundamental leak sources identified and their associated API common factor are as follows:

Fluid	Component	Emission Factor, lb/day	Totals, lb/day/unit
Produced Water	2 ROSH*	No Prediction	
Gas	16 HA-FLGA†	1.15×10^{-3}	0.0184
	4 ROSH	0.331	1.324
	1 Vacuum/Pressure Vent	6.72	6.720
	1 FLGA§	0.439	0.439
			8.5

*ROSH - rotating shaft seal

†HA-FLGA - hatches sealed by flat gaskets

§FLGA - flat gasket connection

6.1.3 Pumps and Compressors

The hydrocarbon emission factors used for pumps and compressors were also developed using the building block approach in conjunction with the Rockwell report. However, unlike valve and fittings a larger number of individual mechanical joints were involved in the computations.

The development of an emission factor for pumps in liquid service was based on what the typical pump configuration for a specific lease site resembled and not on a universal configuration. For example, a total emission factor of 0.141 lb/day was computed for the pump configuration illustrated in Figure 6.1-1. This would be the emission factor used for this type of pump located at a specific lease site. At another lease site a slightly different pump configuration might exist requiring the use of the building block approach to arrive at another pump emission factor.

The development of emission factors for gas compressors was based on four universal compressor configurations and is discussed in Section 6.2.

6.1.4 Steam Flood and Cyclic Steam Well Vent Emissions

The primary emission point on steam flood and cyclic steam wells is the casing vent. If the casing vent is left open with either type of well, steam, entrained water, carbon dioxide, hydrocarbons and hydrogen sulfide can be emitted. Steam flood emissions generally occur from steam breakthrough or short circuiting. Cyclic steam wells release significant emissions primarily following steam soaking. The emissions decrease as the downhole pressure decreases. Well vent emissions can be controlled by vapor recovery systems. There systems are more common in steam flooding operations and in leases operated by the major oil companies.

Well vent emissions have been quantified by Radian (Ref. 3). They are 3.6 lb/day/well of VOC for cyclic steam wells and 220.3 lb/day/well of VOC for steam flood wells.

These emission factors have been applied to the well vent inventory which was presented in Section 5.0. However, they were not included with the computer model for two reasons. The first was that the Radian report was expressed in terms of VOC and KVB's analysis was conducted in THC. It was felt that no valid correlation existed. Second, the Radian report was published in September 1981 which was too late to be included in the computer analysis.

6.1.5 IC Engines

The emission factors used for IC engines were based solely on KVB's IC engine field test results which are discussed in Section 4.0. Emissions were reported in units of lb/day/unit for NO_x, SO_x, CO, and THC. The emission factors used in the computer model are:

Emissions, lb/day/unit			
NO_x	SO_x	CO	THC
7.9	0.0072	180	14.6

Emissions were only computed for gas-fired engines. The existence of oil-fired engines in California oil field is believed by KVB to be insignificant.

6.1.6 Heaters and Heater-Treaters

As with IC engines, the emission factors developed for heaters and heater-treaters were based solely on KVB's field test results which are discussed in Section 4.0. However, unlike IC engines, heaters and heater-treaters only operate about 50 percent of the time. The other 50 percent is spent with only the gas pilot light "on." As a result, the emission factors used were a composite of 50 percent "on" time and 50 percent "pilot light" time. However, due to the small amount of fuel used during the pilot light cycle (~ 15 scf/hr) compared to the "on" cycle the emission factor computed approximated the factor for "on" time. Consequently, the final emission factor used are those for the "on" cycle as follows:

Emissions, lb/10^6 Btu			
NO_x	SO_x	CO	THC
0.056	0.0006	1.76	0.35

Emissions were reported in terms of million Btu/hr fired rather than lb/day/unit as was done for IC engines. This is because information was only available on the approximate annual heat input rate and not on the number of units in service. The average unit size operating in California oil fields is estimated to be 6 million Btu/hr.

6.1.7 Steamers and Boilers

Steamers and boilers operating in California's oil fields fire both gas and oil. Crude oil is the predominant fuel, but gas-fired units can be found along the coast and in the South Coast Air Basin. Oil-fired emission factors expressed as lb/day per million Btu fired were derived from KVB's TEOR report (Ref. 2). Fuel sulfur levels were assumed to be 1.0 percent which is believed to be fairly consistent with Kern County sulfur levels. The Kern River Field, for example, has a sulfur level of approximately 1.1 percent. It

should be noted that no correction was used for SO_2 scrubbers. This was done for two reasons. First, the study year is 1979 and scrubber rules were just in the process of being implemented. Second, it would have been rather complex to ascertain which units had scrubbers and the operating efficiencies.

Emission factors from gas-fired units were derived from AP-42 (Ref. 4). As with oil firing, they were expressed as lb/day per million Btu fired.

During discussions concerning steamer/boiler population and related emissions, a member of the ARB staff indicated that the Kern County APCD had found that steamers were operating at an average 55 percent of rated capacity. It was agreed that the KVB emission factors should be adjusted to reflect this lower firing rate. The emission factors used in the computer program are presented below:

Steamer/Boiler Emission Factors
$lb/10^6$ Btu Heat Input

	NO_x	SO_x	CO	TSP	THC
Gas-Fired	0.11	3.33×10^{-4}	9.33×10^{-3}	5.5×10^{-3}	1.65×10^{-3}
Oil-Fired	0.187	0.579	2.2×10^{-2}	8.54×10^{-2}	5.13×10^{-3}

6.1.8 Fire Flood

KVB's TEOR Report (Ref. 2) was the source for fire flood emission factors. The composite numbers presented in that report include values for gas-fired compressors and well vents. Emissions are reported in terms of lb/bbl net crude produced.

Fire Flood Emission Factors
lb/bbl Produced

NO_x	SO_x	CO	THC	TSP
0.05	0.03	0.009	0.40	0.15

6.1.9 Tanks

The vast majority of oil field associated tanks are fixed roof. The emissions from these are covered by the breathing and working loss equations presented in this section. In Kern County open top well test or gauge tanks were observed at several sites. These were treated as if they were sumps or pits and the associated emission factor based on exposed surface area was applied.

Fixed roof breathing and working loss emission equations are derived from AP-42, Section 4.3.2. In their basic form they are:

$$L_B = 2.21 \times 10^{-4} M \left[\frac{P}{14.7-P}\right]^{0.68} D^{1.73} H^{0.51} \Delta T^{0.50} F_p C K_c$$

$$L_w = 2.40 \times 10^{-2} MP K_n K_c$$

where

L_B = fixed roof breathing loss (lb/day)

M = molecular weight of vapor

P = true vapor pressure

D = tank diameter

H = average vapor space height

ΔT = average ambient temperature change from day to night

F_p = paint factor

C = small tank adjustment factor

K_c = crude oil factor

L_w = fixed roof working loss

K_n = turn over factor

It would be an extremely prohibitive task to inventory each of the estimated 10,000 oil field tanks in the state to determine the necessary parameters and to calculate the emissions. Thus, these equations were reduced to simplified forms which would approximate emissions determined by the AP-42 equations. Assumptions were made and certain of the factors, such as the paint factor, were fixed based on KVB field experience and information

received from oil company representatives and other sources.* Additionally, the results of the fixed roof tank emission study conducted by Engineering Science for WOGA (Ref. 12) were incorporated into the simplified equations. Through testing, that study determined that tank emissions were actually 60 percent of that predicted by the AP-42 equations.

Following is the derivation of those simplified equations:

Setting $M = 50$, $K_C = 0.65$, $P = 5$ psia, $\Delta T = 25°F$, $F_P = 1.1$, Converting to tons/yr and dividing by 10^3 bbl capacity (V), the Breathing Loss equation becomes:

$$\frac{L_B}{V} = 0.00459\ D^{1.73}\ H^{0.51} \times C$$

Then using a common range of tank sizes and assuming that the tanks remain 50 percent full, a range of $\frac{L_B}{V}$ values can be found as shown in the following table:

Tank Capacity bbl	Characteristic Tank Aspect Ratio (d/h)	Diameter ft	Avg. Outage ft	Small Tank Correction Factor (C)	$\frac{L_B}{V}$ [$\frac{tons}{yr}/10^3$ bbl capacity]
100	0.6	7.5	6.3	0.38	1.46
200	0.6	9.5	8	0.48	1.56
250	2.0	15	4	0.75	3.02
500	1.0	15	8	0.75	2.15
1,000	1.4	22	7.5	0.93	2.51
1,200	1.0	20.5	10.3	0.90	2.10
1,500	1.0	22	11	0.93	2.03
2,000	1.9	30	8	1.0	2.38
3,000	1.25	30	12	1.0	1.95
5,000	1.6	38.5	12	1.0	1.80

*The crude stock temperature was statistically analyzed and set at 107°F as a basis for calculating TVP.

The average $\frac{L_B}{V}$ is 2.1 $\frac{tons}{yr}/10^3$ bbl .

Then solving for L_B and correcting for lease specific information, the Breathing Loss equation becomes

$$L_B \left(\frac{tons}{yr}\right) = 2.1 \times \text{Lease Tankage } (10^3 \text{ bbl}) \times C_{\Delta T} \times C_{TVP} \times 0.6 \times C_{VR}$$

where

$$C_{TVP} = 1.57 \left(\frac{P}{14.7 - P}\right)^{0.68}$$

$$C_{\Delta T} = \left(\frac{\Delta T}{25}\right)^{0.5}$$

C_{VR} = 0.1 with vapor recovery; 1 if no vapor recovery is used

Lease Tankage = value derived from tank capacity model presented in Section 5.0

Next, with M = 50, P = 5 psia, K_C = 0.84 and converting

$$L_W \text{ from } \frac{lb}{10^3 \text{ gal}} \text{ to } \frac{tons}{10^3 \text{ bbl}}$$

The Working Loss equation becomes

$$L_W = 0.106\ K_N \times 0.6 \times C_{VR} \times \text{Lease Throughput}\ \left(\frac{10^3\ \text{bbl}}{\text{yr}}\right) \times C_{FT}$$

where

$$K_N = 1.0 \text{ if } \frac{\text{Annual Production}}{2000\ \text{bbl}} < 36$$

$$0.8 \text{ if } \frac{\text{Annual Production}}{2000\ \text{bbl}} = 36\text{-}50$$

$$0.6 \text{ if } \frac{\text{Annual Production}}{2000\ \text{bbl}} = 50\text{-}90$$

$$0.4 \text{ if } \frac{\text{Annual Production}}{2000\ \text{bbl}} = 90\text{-}160$$

$$0.25 \text{ if } \frac{\text{Annual Production}}{2000\ \text{bbl}} > 160$$

C_{FT} = 0.75. This is a tank function correction factor which accounts for those lease tank types which experience working loss (storage or line, LACT and guage tanks). It is based on the statistical presence of these tanks in the Ventura County data. Wash tanks comprise the major class not included in the working loss analysis.

A vapor pressure correction factor of $(\frac{P}{5.0})$ is a refinement to this equation which was not included in the computer program. In future use, it is recommended that the form of the Breathing Loss equation should be:

$$L_W = 0.0795\ K_N \times (\frac{P}{5.0}) \times 0.6 \times C_{VR} \times \text{Lease Throughput}$$

Note that the crude vapor pressures in less than 25 percent of the survey fields could be determined despite an extensive data search conducted by KVB. A number of data sources were contacted including agencies, oil

companies, and oil testing laboratories. Therefore, the error introduced by not including a pressure correction in the Working Loss equation cannot be determined, but it is not expected to be greater than 25 percent on a statewide basis. That would cause a variance in the hydrocarbon emission estimated by this study of less than two percent.

6.2 GAS PLANTS

Emission factors for gas plants were calculated using various inventory and fundamental emission factor data. These calculations were performed by hand on prepared worksheets that were systematically checked for errors. These worksheets are on file at KVB. In this section the procedures will be described and the results presented and discussed.

This section contains a derivation of compressor and pump emission factors in addition to those for valves, fittings, etc. These compressor and pump emission factors were used throughout the study in developing composite factors for oil wells, etc.

6.2.1 Methodology

The gas plant emission factors are based on KVB's surveys of three gas production plants and one gas pumping ("pusher") station. The gas plants were at Tenneco-Gosford, Gulf-Yowlumne and Aminoil-Huntington Beach. The pusher station was at Lomita Gas-Harbor Plant.

The first step in computing the emission factors is to tabulate and summarize the component inventory as shown in Table 6.2-1. A sample tabulation is shown in Table 6.2-2 for the Gulf-Yowlumne plant.

Note that Table 6.2-2 reflects the experimental style of specifying emission rate used by Rockwell for the API (Ref. 1) report. The righthand block is a summary of all components counted and the corresponding emissions for valves and fittings on the Gulf-Yowlumne plant. Note that the initials of the engineer who made the tabulation, as well as those of the one checking the calculations, are indicated on the sheet.

Engineer 10
Date

TABLE 6.2-1. VALVE AND FITTING INVENTORY SHEET

OPERATOR Gulf/Warren Oil
FIELD YowLumne
SYSTEM Gas Refrigeration Plant No. 2
FLUID Glycol

VALVES Legend: / - Flanged Connections
† - Threaded Connections
ϕ - Buried Connections

	Components Flanged	Components Threaded	Totals Connections
. Gate	/	† X 3 =	
		X 3 =	
. Plug		X 3 =	
. Ball † †	-	2 X 3 =	
. Check		X 3 =	
. Flow Control † †	-	2 X =	
. Pressure Regulator		X =	
. Pressure Relief		X =	
. Butterfly		X =	
.		X =	
.		X =	
SUB-TOTAL	-	4	

FITTINGS Legend: / Welded Connections
† Threaded Connections

	Welded /	Threaded †	Totals
. Unions / †	1	1 X 3 =	
. Flanges //	2	- X =	
. Swagelok† //////////////	-	11 X =	
. Elbows† ///	-	3 X 2 =	
. Tees† /	-	1 X 3 =	
. Coupling† ////////	-	7 X 2 =	
.		X =	
.		X 1 =	
. Misc.# //	-	2 X 1 =	
SUB-TOTAL	3	25	
TOTAL			

Single Threaded Random Fitting

COMMENTS:

TABLE 6.2-2. GAS PLANT OPERATION

MISSION COMPUTATION WORKSHEET FOR GULF-WARREN-YOWLUMNE

Component Type (CN) Style	No. of Components in Gas Service Group 7	THC* Rockwell Prediction lbs/day	THC Emission Rate lbs/day	No. of Components in Gas Service Group 3	THC† Rockwell Prediction Factors lbs/day	THC Emission Rate lbs/day	Comments			
VL(THRD)							Totals for Site:			
							Valves			
Gate		0.186 E + 01			0.528 E + 00		Group 1	_____		
Plug		0.219 E + 01			0.517 E + 00		Group 3		_____	
Ball		0.213 E + 00			0.522 E - 01		Total			_____
Check		0.169 E + 00			0.418 E - 01		Fittings			
Butterfly		0.291 E + 01			0.840 E + 00		Group 1	_____		
Needle		0.259 E + 00			0.612 E - 01		Group 3		_____	
Choke		---			---		Total			_____
Bean		---			---					
Relief		0.494 E + 00			0.105 E + 00		Emissions: (lbs/day)			
Flood Control§		0.502 E + 01			0.605 E + 00		Valves	_____		
Press. Reg.		0.142 E + 00			0.364 E - 01		Pumps	_____		
Globe		0.289 E + 01			0.449 E + 00		Compressors	_____		
							Pumps	_____		
SM Relief#		0.337 E + 01			---		Tanks	_____		
								_____		
Subtotal:								_____		
								_____		
VL (WLD)							Totals:	_____		
Ball		0.708 E - 01			0.158 E - 01					
Plug		0.205 E + 01			0.481 E + 00					
Check		0.267 E - 01			0.539 E - 02					
Subtotal:										

*Source: API Report, Table E-3, Group I

§Source: MESL 2 x CN FLFF

†Source: API Report, Table E-3, Group 3

#Applicable only to relief valves open to the atmosphere. Do not include in valve count.

A. Compressors--

In gas plants and other oil production operations, compressors are used for gas compression, separation, transmission or reinjection. Major types of compressors include:

- reciprocating, multistage
- centrifugal
- refrigeration
- turbine centrifugal, multistage

For the purpose of deriving an emission factor, KVB's field survey and test data were combined with available information from textbooks and handbooks, such as Perry (Ref. 13), Marks (Ref. 14), and the API report (Ref. 1). From the API report, emission factors from Table E-3 were used. This table segregates the gas products into such groups as (1) dry gas, (2) LPG, (3) wet gas. Compressors handle field gas, dry gas and propane depending on application. Therefore, it was assumed that wet gas and field gas were synonymous and that propane and LPG were the same.

In developing the compressor emission factors, the designs shown in Figures 6.2-1 and 6.2-2 which illustrate a reciprocating and a centrifugal compressor respectively were used.

For the reciprocating compressor, the fundamental leak sources are as follows:

No. of Seals	Description	API Abbreviation
2	Reciprocating Shaft Seals	SP RERO
2	Controlled Head Space Seals	SP MESL
20	Valve Unloader Seals	CN THRD
28	Compressor Cover Plates	CN FLFF
2	Poppet Relief Valves	SM RELF
3	Line Shut Off Valves with 2 Threaded Connections Each	VL GLBE

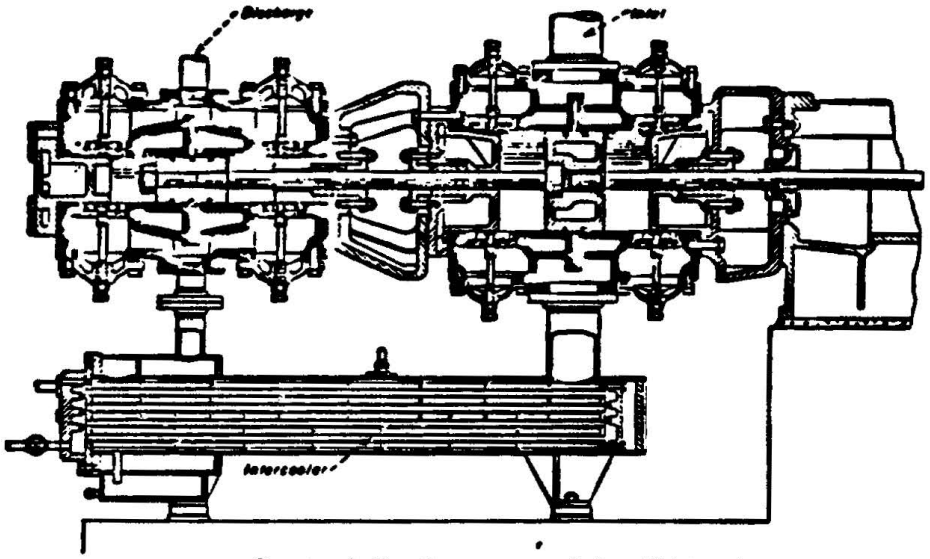

Two-stage double-acting compressor cylinders with intercooler.

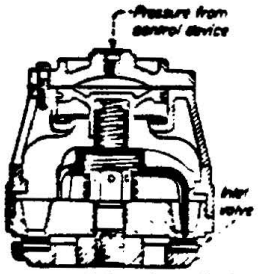

Inlet valve unloader.

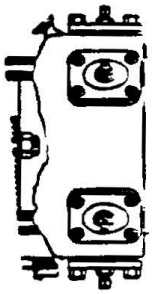

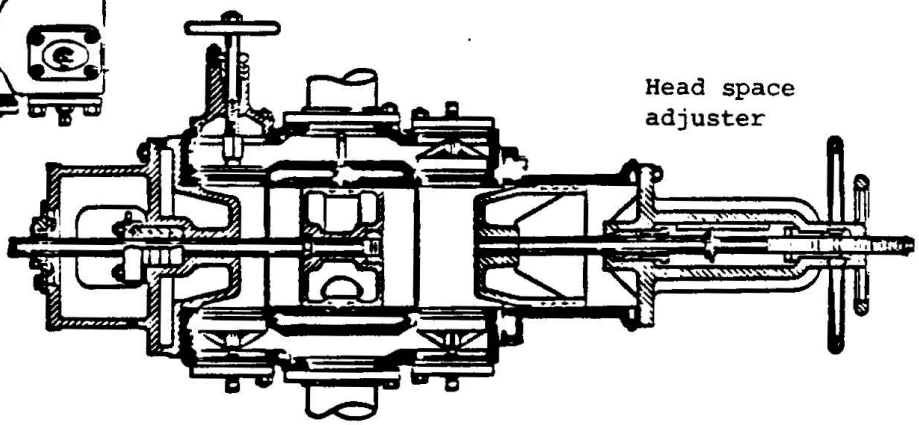

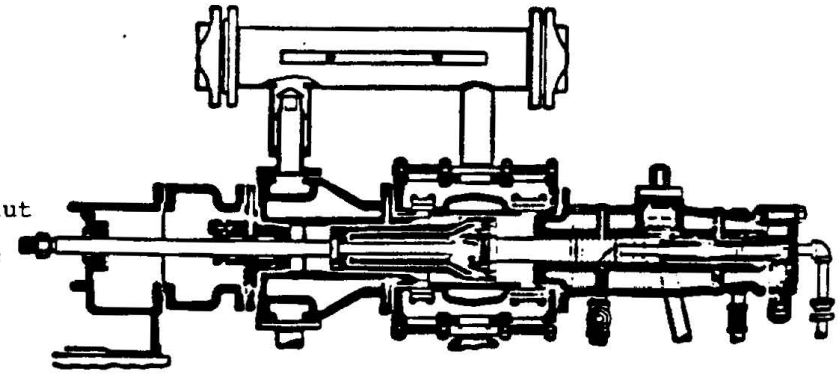

Figure 6.2-1. Reciprocating Compressors

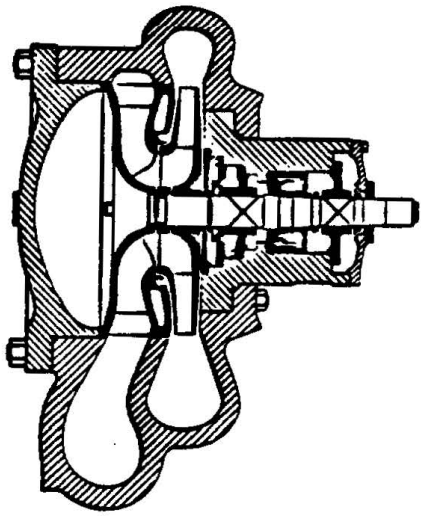

Single-stage cantilever-design centrifugal compressor.

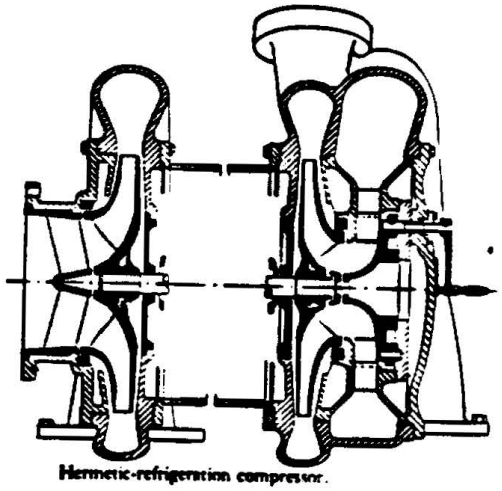

Hermetic-refrigeration compressor.

Half section of Allis-Chalmers single-inlet multistage compressor.

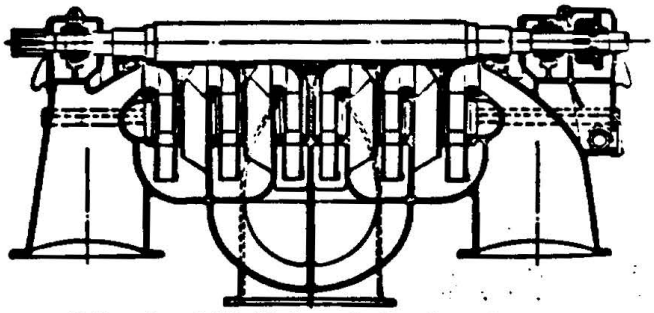

Half section of Allis-Chalmers double-inlet multistage compressor.

Figure 6.2-2. Centrifugal Compressors

Using the factors from Table E-3 of the API report, the emission factors are constructed as follows:

Component	Group 1 Dry Gas	Group 2 LPG Gas	Group 3 Field (Wet) Gas
2 SP RERO	9.28	3.90	2.22
2 SP MESL	9.76	3.03	1.14
20 CN THRD	1.42	3.14	3.64
28 CN FLFF	2.56	5.71	6.36
2 SM RELF	6.88	2.87	3.52
3 VL GLBE	8.68	3.33	2.74
	38.6 lb/day	14.0 lb/day	10.6 lb/day

If an equal distribution were assumed for all three types of products, the average emissions would be 21 lb/day. However, a more realistic approach would be to use a weighted distribution with 50 percent of the compressors handling dry gas (Group 1), 30 percent handling wet gas (Group 3), and 20 percent handling LPG (Group 2). Under this assumption, the emission factor is 25 lb/day/compressor.

A similar calculation for a centrifugal refrigerator compressor handling propane accounts for:

2 rotating seals	SP ROSH
2 gasket flange connections	CN FLGA
2 flat face flanges	CN FLFF
1 relief valve	SM RELF

The calculation is:

Component		Group 2 LPG Gas
2 SP ROSH	0.149 E + 01	2.98
2 CN FLGA	0.419 E - 01	8.38
2CN FLFF	0.204 E - 01	4.08
1 SM RELF	0.142 E + 01	1.44 E + 01
		4.5 lb/day/compressor

For a single or double inlet centrifugal compressor, a typical arrangement is:

2 rotating shaft seals	SP ROSH
3 gasketed connection for inlet and outlet	CN GASK
4 flat face interfaces of compressor halves	CN FLFF
1 poppet relief valve with 1 threaded connection	SM RELF
4 threaded connections (gauges)	CN THRD
3 line shut-off globe valves with 2 threaded connections	VL GLBE

Component	Group 1 Dry Gas	Group 2 LPG Gas	Group 3 Field (Wet) Gas
2 SP ROSH	5.74	2.98	2.82
3 CN GASK	0.0177	0.00390	0.00438
4 CN FLFF	0.366	0.0816	0.0908
1 SM RELF	3.44	1.44	1.76
4 CN THRD	0.285	0.0628	0.0728
3 VL GLBE	8.68	3.33	2.85
	18.5 lb/day	7.9 lb/day	7.6 lb/day

Assuming a logical distribution of compressor use where:

40% of all rotary compressors handle field gas (Group 3)
20% of all rotary compressors handle LPG prod (Group 2)
40% of all rotary compressors handle dry gas (Group 1)

the average centrifugal compressor hydrocarbon emission factor is 12.0 lb/day/compressor.

With these emission factors for reciprocating, refrigeration and centrifugal compressors established, it is necessary to derive an emission fator for the case where the number of compressors is known but the type of compressors is unknown. In this case a reasonable approch is to assume 10 percent of the emission came from refrigeration duty compressors, 60 percent from the reciprocating compressors and 30 percent from centrifugal.

$$(0.1 \times 4.5) + 0.6 \times 25) + 0.3 \times 12) = 19.1 \text{ lb/day/compressor}$$

Since it is necessary to segregate the hydrocarbon emissions into methane and non-methane hydrocarbons, the compositional data at the end of Table E-3 of the API report (Ref. 1) was used. This table provides a composition breakdown by product group. The Table 6.2-3 summarizes the previous results and provides a breakdown of methane, non-methane and total emissions for each type of compressor and their weighted aggregate.

B. Pumps--

Unlike the compressors, gas plant pumps were treated on an individual subcomponent basis. Table 6.2-4 is a summary of the pump inventory taken at the Aminoil Number 11 gas plant.

In computing the pump emissions for a given gas plant or oil lease, the individual seals, such as those listed in Table 6.2-4 are included on the

TABLE 6.2-3. COMPRESSOR EMISSION FACTOR SUMMARY

Prod. Group	% of Use	Emissions, lb/day/compressor Methane	Non-Methane	Total
Reciprocating Compressors				
1	50	17.0 (88%)	2.3 (12%)	19.3
2	20	0.1 (4%)	2.7 (96%)	2.8
3	30	2.0 (61%)	1.1 (39%)	3.1
		19.1 (76%)	6.1 (24%)	25.0
Refrigeration Compressors				
2	100	0.2 (4%)	4.3 (96%)	4.5
Centrifugal Compressors				
1	40	1.8 (61%)	1.2 (39%)	3.0
2	20	0.1 (4%)	1.5 (96%)	1.6
3	40	6.5 (88%)	0.9 (12%)	7.4
		8.4 (70%)	3.6 (30%)	12.0
Aggregation				
Reciprocating (60%)		11.5 (76%)	3.6 (24%)	15.1
Refrigeration (10%)		0.0 (0%)	0.5 (100%)	0.5
Centrifugal (30%)		2.5 (69%)	1.1 (31%)	3.5
Total		14.0 (73%)	5.2 (27%)	19.2

TABLE 6.2-4. GAS PLANT PUMP INVENTORY

No.	Type	Service Fluid	Seals Quantity	Seals Description
1.	Centrifugal	Natural Gasoline (wet gas)	1	SP ROSH
			2	CN FLFF
			2	CN FLGA
			1	CN THRD
2.	Dual-Piston	Natural Gasoline (wet gas)	2	SP RERO
			4	CN FLGA
			2	CN THRD
			1	SM BALL
		Dry Gas	2	SP RERO
			3	CN FLGA
			3	SM GATE
			3	CN THRD
3.	Centrifugal	Propane (LPG)	1	SP ROSH
			2	CN FLGA
	(2 units, one run and one on standby)		1	CN THRD
4.	Gear	Glycol (LPG)	1	SP ROSH
	(2 total, one run and one standby)		2	CN FLGA
			2	CN THRD
5.	Piston	Glycol (LPG)	2	SP REPO
	(2 total, one run, one standby)		4	CN THRD
			2	CN FLGA
6.	Screw (Reflux)	Propane (LPG)	1	SP ROSH
	(both operate)		2	CN FLGA
7.	Screw	Natural Gasoline (wet gas)	1	SP ROSH
			2	CN FLGA

(continued)

TABLE 6.2-4. (Continued)

No.	Type	Service Fluid	Seals Quantity	Seals Description
8.	Screw	Amine (wet gas)	1	SP ROSH
			2	CN FLGA
9.	Centrifugal (use - 450 min/wk for shipping purposes)	Propane (LPG)	1	SP ROSH
			1	CN FLGA
10.	Centrifugal (use - 450 min/wk for shipping)	Natural Gasoline (wet gas)	1	SP ROSH
			2	CN FLFF
			1	CN FLGA

fitting inventory sheet (Table 6.2-4), and on the emission computation worksheet (Table 6.2-4). In those cases where the specific details of a pump are unknown, the component breakdown was assumed to be:

1 - SP ROSH
2 - CN FLGA
1 - CN THRD

The emissions from this typical pump for the various services is as follows:

TYPICAL PUMP EMISSIONS FOR GAS PLANT
AND OTHER OIL FIELD USE (lb/day)

Component	Group 1 Dry Gas	Group 2 LPG	Group 3 Wet Gas
1 SP ROSH	2.87	1.49	1.41
2 CN FLGA	0.388	0.0838	0.1010
1 CN THRD	0.0712	0.0157	0.0182
Total	3.3	1.59	1.53

A typical product distribution for use if the actual one is unknown is 10 percent dry gas, 40 percent LPG and 50 percent wet gas. Thus the average gas plant pump emissions from a typical unit are 1.73 lb/day.

SECTION 7.0

EMISSION INVENTORY RESULTS

7.1 EMISSION INVENTORY BY CATEGORY

Oil production fugitive hydrocarbon models developed for this program are presented in Table 7.1-1. Leases and other production facilities which were surveyed are shown in Table 7.1-2 with their model assignment. Emission algorithms for each model were calculated by summing the daily emissions in each category by emission source type (i.e., valves, fittings, pumps, etc.) and dividing by the number of wells. The 11 oil production models as used in this program to estimate fugitive hydrocarbon emissions are presented in Table 7.1-3. Note that each model in Table 7.1-3 except Model 11 expresses emissions on the basis of lb/day/well. Since there are no wells at the onshore facilities the emissions are in total lbs per day for the facility.

Model assignments for each oil field lease in the eight study counties were made using the DOG data base printout developed for this program, well counts provided by John Matthews, program consultant, and information from data sources such as the annual DOG report. Generally, a gas/oil ratio (GOR) of 500 was used as the determination of whether significant gas was produced. There were some exceptions as some older fields with relatively low GOR still maintain operating gas plants. These then, were assigned to lease models which reflected significant gas production.

The gas plant emissions model is presented in Table 7.1-4. The emissions for each emissions source category were obtained by summing emissions between surveyed gas plants and dividing by daily gas throughput. Note that this model calculates combustion-generated emissions as well as fugitive hydrocarbon emissions.

Using the model encoding sheets contained in the Appendix, each of the 12 previously discussed models as well as the tank models and emission factors for IC engines, heater treaters, steam generators, boilers, and fire floods were entered into the computer. Then using the encoded data for each field or

TABLE 7.1-1. OIL FIELD FUGITIVE HYDROCARBONS MODELS

1.	One and two well leases.
2.	3 - 10 well leases with significant gas production.
3.	3 - 10 well leases with little or no gas.
4.	Over 10 well leases with little or no gas.
5.	Unitized operation.
6.	Over 10 wells with significant gas production.
7.	Oil island.
8.	First generation offshore platforms.
9.	Second generation offshore platforms.
10.	Kern River - Getty's operations.
11.	Onshore production facilities.
12.	Gas plants.

TABLE 7.1-2. MODEL ASSIGNMENT FOR SURVEYED LEASES

Lease	Field	No. of Wells	Type	Extraction Method	GOR (1)	Model
Big Mountain	Big Mountain	4	Field	Sucker	1346	2
NDH Tank Farm	Pyramid Hills	8	Field	Sucker	1390	2
Rincon Island	Rincon	35	Island	Kobe	381	7
Union Lompoc	Lompoc	110	Field	Sucker	1891	5
San Vincente	San Vincente	42	Unit-Drilling Island	Gas Lift	1037	5
Yunker Morton Dolly	Long Beach	1	Field	Sucker	<500	1
Texaco Robinson	Long Beach	3	Field	Sucker	<500	3
Crown Oil Lease	Long Beach	4	Field	Sucker	<500	3
Texaco Crosswell	Long Beach	1	Field	Sucker	<500	1
Davis-Stephanie	Long Beach	3	Field	Sucker	<500	3
Victory Oil	Long Beach	1	Field	Sucker	<500	1
Davis #31	Long Beach	1	Field	Sucker	<500	1
Texaco Unit	Long Beach	261	Field	Sucker	<500	5
Shell Unit	Long Beach	46	Field	Sucker	<500	5
Atlantic Dodge	Long Beach	1	Field	Sucker	<500	1
Hathaway	Long Beach	2	Field	Sucker	<500	1
Axis Petroleum	Long Beach	1	Field	Sucker	<500	1
Tapo Lease	South Tapo Canyon	4	Field	Sucker	118	3
KCL	White Wolf	15	Field	Sucker	0	4
Rio Viejo South	Yowlumne	2	Field	Kobe	1500	1
H&C Units 1&2	Santa Clara	7	Field	Sucker	505	2
H&C Unit 3	Santa Clara	11	Field	Sucker	505	6
Tenneco-Gosford	Yowlumne	9	Field	(Combination)	1500	2
Tenneco Tank Farm	Yowlumne	16	Field	Kobe	1500	6
Tenneco 22x-34	Rio Viejo	1	Field	Kobe	257	1
Platform C	Dos Cuadras	23	Platform(Gen2)	Gas Lift	N/Listed	9
Platford Hilda	Carpenteria	12	Platform(Gen1)	Gas Lift	N/Listed	8
Hay Fee	Yowlumne	1	Field	Sucker	1500	1
L. W. Babcock	Union Ave.	2	Field	Sucker	0	1
Frazier	Canfield Ranch	6	Field	Sucker	1153	2
Tenneco-Texaco 22x-11	Yowlumne	1	Field	Sucker	1500	1
East Rosecrans	East Rosecrans	2	Field	Sucker	2240	1
Getty	Kern River	>1000	Field	Sucker	0	10
Nukern	Kern River	21	Field	Sucker	0	4
Fee 'B'	Kern River	56	Field	Sucker	0	4
Midway-Premier	Cymric	21	Field	Sucker	726	6
Tegeler	Kern Front	50	Field	Sucker	156	4

(1) GOR or gas/oil ratio is the cubic feet of gas produced per barrel of oil.

TABLE 7.1-3

OIL FIELD MODELS - COMPOSITE FUGITIVE HYDROCARBON EMISSION FACTORS[a]
(THC LB/DAY) PER WELL

Model No.	Valves	Fittings	Cellars	Well Heads	Pumps	Compressors	Sumps & Pits	Mech. O/W Separators
1	8.74	3.61	0.19	0.0005	0.08	--	3.57	--
2	14.12	5.35	1.12	0.002	0.03	0.89	3.35	--
3	1.81	0.66	0.42	0.003	--	--	23.55	--
4	0.57	0.35	--	--	0.002	--	3.58	--
5	1.8	0.86	--	0.01	0.004	0.07	0.11	0.07
6	9.67	4.69	0.07	0.0007	0.05	0.64	0.237	--
7	7.89	3.0	--	--	0.02	--	0.005	0.243
8	6.43	2.15	--	--	0.014	1.02	--	--
9	2.63	0.68	--	--	--	0.24	--	--
10	0.019	0.018	--	0.007	0.0002	--	0.172	0.024
11[b]	305.0	117.0	--	--	0.449	22.6	68.2	25.0

(a) Developed from the application of KVB oil field/lease inventories to emission factors developed from Rockwell International Report EMSC 8002, 17FR, prepared for the American Petroleum Institute.

(b) Onshore facility, receives oil from offshore platforms. Emission factors shown are total daily emissions (lb/day) for facility.

TABLE 7.1-4. GAS PLANT EMISSIONS MODEL

(lb/mmCF Daily Gas Throughput)

	THC	NO_x	SO_x	CO	Particulates
Valves	87.7	--	--	--	--
Fittings	19.9	--	--	--	--
Sumps	3.0	--	--	--	--
Pumps	0.91	--	--	--	--
Compressors*	135.4	263.1	0.04	66.0	--
Heaters	0.97	0.27	0.008	17.1	--
Boilers	0.06	2.8	0.01	0.27	0.16
Flares	--	--	83.7	--	--

*Includes emissions from associated IC engines.

gas plant, the computer was able to assess annual emissions for each facility as shown in Figures 7.1-1 and 7.1-2.

7.2 AGGREGATION BY FIELD

The computer program developed for this program printed out information at four levels. They were field, county, air basin, and statewide emission summaries. A typical field emissions summary is presented in Table 7.2-1. Table 7.2-2 lists the total emissions estimated by the computer program for each producing oil field in the state. Where data were available, non-methane hydrocarbon emissions, as a fraction of total hydrocarbon emissions, are presented in Table 7.2.3 for each category of equipment.

7.3 AGGREGATION BY COUNTY

Tables 7.3-1 through 7.3-8 present the county-by-county emission summaries for the eight-study counties estimated by the computer. These summaries include not only oil field emissions, but also emissions estimates from gas plants and onshore production facilities which may be located in a given county. It should be noted that certain oil fields such as Brea-Olinda are located in more than one county. As a result, it was necessary to split those fields and treat the segments as separate fields appearing in each county. Leases and surface equipment were apportioned with each segment.

7.4 AGGREGATION BY AIR BASIN

Air basin emission summaries are presented in Tables 7.4-1 through 7.4-4 for the North Central, South Central, South Coast, and San Joaquin air basins.

7.5 STATEWIDE SUMMARY

The statewide summary of emissions from petroleum production operations is presented in Table 7.5-1. This summary includes emissions from all fields, platforms, oil islands, onshore facilities and gas plants in the eight-study counties (Los Angeles, Orange, Ventura, Santa Barbara, San Luis Obispo, Monterey, Kern, and Fresno). It does not include emissions from other petroleum producing counties such as Kings, Riverside, Contra Costa, San Benito, and others which produce minor amounts of petroleum.

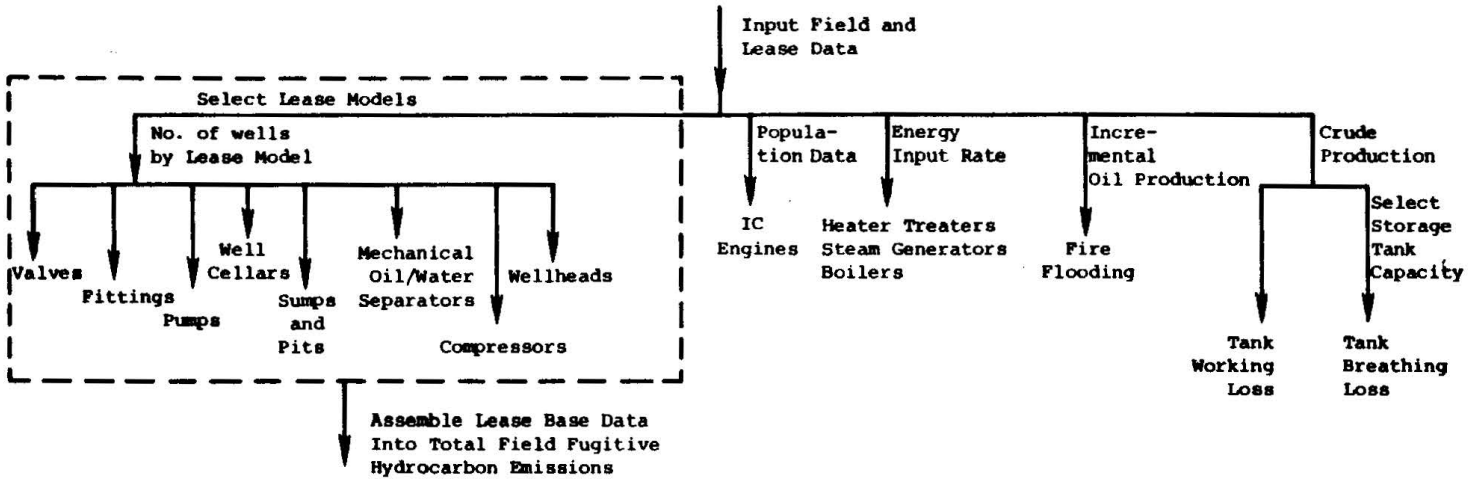

Figure 7.1-1. Implementation of Lease Base and Oil Field Emissions Models

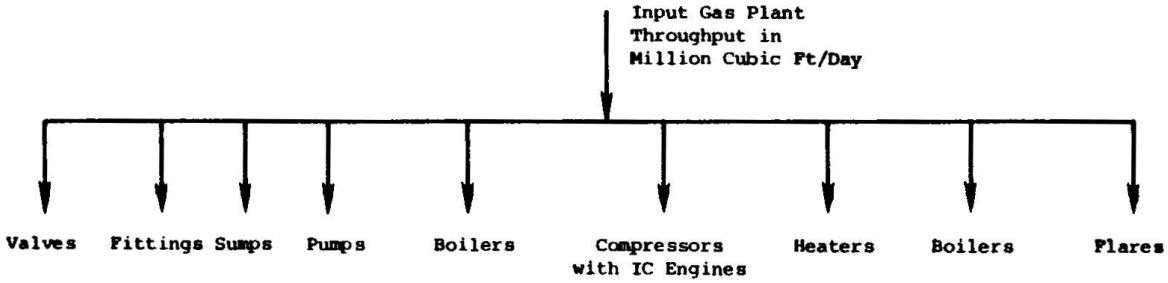

Figure 7.1-2. Implementation of Gas Plant Emission Model

TABLE 7.2-1. 1979 TOTAL EMISSIONS FROM PETROLEUM PRODUCTION IN CALIFORNIA

Field: South Belridge

PROCESS NAME	EMISSIONS BY POLLUTANT IN METRIC TONS PER YEAR THC	NO_x	CO	Part.	SO_x
Tanks Breathing Loss	204.6	0.0	0.0	0.0	0.0
Tanks Working Loss	193.1	0.0	0.0	0.0	0.0
Well Cellars	6.2	0.0	0.0	0.0	0.0
Sumps and Pits	2333.2	0.0	0.0	0.0	0.0
Valves	356.7	0.0	0.0	0.0	0.0
Fittings	209.7	0.0	0.0	0.0	0.0
Well Heads	2.7	0.0	0.0	0.0	0.0
Pumps	1.2	0.0	0.0	0.0	0.0
Heater Treater	1618.7	41.9	4076.8	0.0	0.3
Steamer/Boiler-Oil Fired	53.5	1820.1	236.0	829.7	5620.9
Fire Flood	272.1	34.0	6.1	102.0	20.4
Total	5251.7	1896.0	4318.9	931.7	5641.6

TABLE 7.2-2. SUMMARY OF EMISSIONS FROM PETROLEUM PRODUCTION BY COUNTY AND FIELD IN CALIFORNIA, 1979

County	Field	Pollutant Emissions Metric Tons/Year THC	NOx	CO	Part.	SOx
FRESNO	Burrel	12	--	--	--	--
	Burrel, Southeast	20	--	--	--	--
	Camden	3	--	--	--	--
	Cheney Ranch Gas	13	--	--	--	--
	Coalinga	3,343	1,043	3,266	426	2,887
	Coalinga, Extension	458	33	735	--	--
	Five Points	3	--	--	--	--
	Guijarral Hills	83	6	147	--	--
	Helm	238	34	765	--	--
	Jacalitos	180	33	735	--	--
	Kettleman, North Dome	239	--	--	--	--
	Kreyenhagen	20	--	--	--	--
	Pleasant Valley	10	--	--	--	--
	Raisin City	372	65	1,470	--	--
	Riverdale	218	26	588	--	--
	San Joaquin	17	--	--	--	--
	Turk Anticline	6	--	--	--	--
	Westhaven	8	--	--	--	--
	Subtotal	5,243	1,240	7,706	426	2,887
	(Gas Plant)					
	Coalinga Nose	2,464	2,646	829	2	832
	COUNTY TOTAL	7,707	3,886	8,535	428	3,719
KERN	Ant Hill	82	--	--	--	--
	Antelope Hills	173	--	--	--	--
	Antelope Hills, North	24	--	--	--	--
	Asphalto	353	26	588	--	--
	Beer Nose	13	--	--	--	--
	Belgian Anticline	485	13	2	6	41
	Bellevue	70	6	147	--	--
	Bellevue, West	14	--	--	--	--
	Belridge, North	689	125	16	57	385
	Belridge, South	5,252	1,896	4,319	932	5,642
	Blackwell Corner	40	--	--	--	--
	Buena Vista	2,665	138	2,211	18	124
	Cal Canal	35	--	--	--	--
	Calders Corner	3	--	--	--	--
	Canal	63	9	206	--	--
	Canfield Ranch	386	39	883	--	--
	Carneros Creek	12	--	--	--	--
	Chico-Martinez	26	--	--	--	--
	Cienaga Canyon	5	--	--	--	--
	Coles Levee, North	637	105	2,353	--	--
	Coles Levee, South	46	--	--	--	--
	Commanche Point	66	--	--	--	--
	Cymric	2,944	342	3,730	87	592
	Devils Den	225	--	--	--	--
	Edison	2,570	269	4,421	33	223
	Edison, Northeast	44	37	5	17	115
	Elk Hills	2,446	1,049	23,528	--	1
	English Colony	10	--	--	--	--
KERN (Cont)	Fruitvale	1,324	148	2,066	26	174
	Goosloo	30	--	--	--	--
	Greeley	179	13	295	--	--
	Jasmin	156	--	--	--	--
	Jasmin, West	9	--	--	--	--
	Jerry Slough	3	--	--	--	--
	Kern Bluff	303	97	13	44	298
	Kern Front	2,244	854	1,458	383	2,594
	Kern River	4,409	13,594	3,549	6,189	41,925
	Lakeside	3	--	--	--	--
	Los Lobos	5	--	--	--	--
	Lost Hills	3,667	469	178	225	1,435
	Lost Hills, Northwest	5	--	--	--	--
	McDonald Anticline	308	--	--	--	--
	McKittrick	1,670	733	95	334	2,265
	Midway-Sunset*	16,063	4,745	17,891	2,062	13,856
	Mount Poso	1,360	304	420	137	927
	Mountain View	1,013	131	2,941	--	--
	Paloma	179	--	--	--	--
	Pioneer	10	--	--	--	--
	Pleito	81	--	--	--	--
	Poso Creek	1,272	230	410	103	698
	Railway Gap	96	88	11	40	271
	Rio Bravo	145	1	58	--	--
	Rio Viejo	36	--	--	--	--
	Rosedale	47	--	--	--	--
	Rosedale Ranch	210	33	735	--	--
	Round Mountain	795	--	--	--	--
	San Emidio Nose	40	--	--	--	--
	Semitropic	114	--	--	--	--
	Seventh Standard	9	--	--	--	--
	Strand	199	41	911	--	--
	Tejon	454	79	1,472	6	41
	Tejon Hills	310	--	--	--	--
	Tejon North	355	33	735	--	--
	Temblor Hills	3	--	--	--	--
	Temblor Ranch	10	--	--	--	--
	Ten Section	620	11	1,027	--	--
	Tule Elk	8	--	--	--	--
	Union Avenue	16	3	59	--	--
	Valpredo	3	--	--	--	--
	Welcome Valley	6	--	--	--	--
	Wheeler Ridge	449	83	1,473	8	57
	White Wolf	43	1	58	--	--
	Yowlumne	297	12	265	--	--
	Subtotal	57,936	25,757	78,529	10,707	71,665
	(Gas Plants)					
	Belridge	1,889	2,028	635	1	638
	Buena Vista	369	397	124	--	125
	Cajon	205	221	69	--	69
	Cymric	205	221	69	--	69
	Lost Hills	205	221	69	--	69
	McKittrick	738	793	248	--	250
	Midway-Sunset	1,395	1,498	469	1	471

*Fields in more than one county.

NOTE: Dash represents no emissions or less than one metric ton/year.

TABLE 7.2-2. (CONTINUED)

County	Field	Pollutant Emissions Metric Tons/Year THC	NOx	CO	Part.	SOx
KERN (Cont)	(Gas Plants, cont)	--	--	--	--	--
	North Coles Levee	1,190	1,277	400	1	402
	Rio Bravo	533	572	179	--	180
	South Coles Levee	3,203	3,439	1,077	2	1,082
	Subtotal	9,932	10,667	3,339	5	3,355
	COUNTY TOTAL	67,868	36,424	81,868	10,712	75,020
LOS ANGELES	Aliso Canyon	271	13	295	--	--
	Alondra	7	--	--	--	--
	Bandini	127	26	588	--	--
	Beverly Hills	497	2	234	--	--
	Brea-Olinda*	238	1	--	3	1
	Canton Creek	5	--	--	--	--
	Cascade	47	--	--	--	--
	Castaic Hills	129	26	588	--	--
	Castaic Junction	78	--	--	--	--
	Cheviot Hills	97	--	--	--	--
	Coyote, West*	24	--	--	--	--
	Del Valle	284	12	500	--	--
	Dominguez	514	144	3,236	--	--
	El Segundo	60	1	89	--	--
	Hasley Canyon	32	--	--	--	--
	Honor Rancho	69	5	117	--	--
	Howard Townsite	128	22	501	--	--
	Hyperion	4	--	--	--	--
	Inglewood	1,219	--	--	--	--
	Las Cienegas	51	--	--	--	--
	Las Llajas	13	3	59	--	--
	Lawndale	8	--	--	--	--
	Long Beach	1,511	130	2,941	--	--
	Long Beach Airport	76	4	89	--	--
	Los Angeles, Downtown	16	--	--	--	--
	Los Angeles, East	63	18	412	--	--
	Lyon Canyon	15	--	--	--	--
	Montebello	444	--	--	--	--
	Newgate	5	--	--	--	--
	Newhall	245	--	--	--	--
	Newhall-Potrero	393	33	735	--	--
	Oak Canyon	108	10	234	--	--
	Placerita	533	16	1	1	--
	Playa del Rey	39	--	--	--	--
	Potrero	84	--	--	--	--
	Ramona*	226	26	588	--	--
	Rosecrans	400	46	1,030	--	--
	Rosecrans, East	13	3	59	--	--
	Rosecrans, South	108	20	471	--	--
	Salt Lake	169	--	--	--	--
	Salt Lake, South	51	--	--	--	--
	San Vicente	17	--	--	--	--
	Sansinena	476	--	--	--	--
	Santa Fe Springs	695	92	2,058	--	--
	Saugus	8	--	--	--	--
	Sawtelle	74	1	115	--	--
	Seal Beach*	374	42	941	--	--

County	Field	Pollutant Emissions Metric Tons/Year THC	NOx	CO	Part.	SOx
LOS ANGELES (Cont)	Tapia	63	--	--	--	--
	Torrance	1,285	30	940	--	--
	Union Station	36	--	--	--	--
	Venice Beach	16	--	--	--	--
	Wayside Canyon	14	--	--	--	--
	Whittier	616	--	--	--	--
	Wilmington	3,183	168	4,409	1	--
	Subtotal	15,258	894	21,230	5	1
	(Gas Plants)					
	Dominguez	163	176	55	--	55
	Inglewood	163	176	55	--	55
	Lomita	287	309	97	--	97
	Newhall	1,520	1,632	511	1	513
	Santa Fe Springs	82	88	27	--	28
	Torrance	42	45	14	--	14
	Subtotal	2,257	2,426	759	1	762
	COUNTY TOTAL	17,515	3,320	21,989	6	763
MONTEREY	King City	102	--	--	--	--
	Lynch Canyon	5	--	--	--	--
	McCool Ranch	5	--	--	--	--
	Monroe Swell	15	--	--	--	--
	Paris Valley	10	--	--	--	--
	Quinado Canyon	5	--	--	--	--
	San Ardo	1,534	1,835	239	874	5,632
	COUNTY TOTAL	1,676	1,835	239	874	5,632
ORANGE	Brea-Olinda*	1,786	55	65	27	166
	Coyote, East	496	4	352	--	--
	Coyote, West*	867	20	1,905	--	--
	Esperanza	56	--	--	--	--
	Huntington Beach	4,059	474	10,500	6	42
	Kraemer	19	--	--	--	--
	Newport, West	451	23	3	35	47
	Olive	32	--	--	--	--
	Richfield	677	--	--	--	--
	Seal Beach*	253	43	970	--	--
	Sunset Beach	20	--	--	--	--
	Yorba Linda	707	26	3	12	83
	Subtotal	9,423	645	13,798	80	338
	(Gas Plants)					
	Coyote, East	369	396	125	--	123
	Coyote, West	81	88	27	--	28
	Huntington Beach	411	442	140	--	139
	Subtotal	861	926	292	0	290
	(Offshore Facility)					
	Belmont	92	--	--	--	--
	COUNTY TOTAL	10,376	1,571	14,090	80	628

*Fields in more than one county.

NOTE: Dash represents no emissions or less than one metric ton/year.

TABLE 7.2-2. (CONTINUED)

County	Field	Pollutant Emissions Metric Tons/Year THC	NOx	CO	Part.	SOx
SAN LUIS OBISPO	Arroyo Grande	262	223	29	102	688
	Guadalupe*	651	537	3,755	169	1,148
	Midway-Sunset*	146	19	296	17	3
	Morales Canyon	5	--	--	--	--
	Russell Ranch*	176	35	793	--	--
	Taylor Canyon	8	--	--	--	--
	COUNTY TOTAL	1,248	814	4,873	288	1,839
SANTA BARBARA	Barham Ranch	36	7	147	--	--
	Capitan	59	--	--	--	--
	Careaga Canyon	5	--	--	--	--
	Casmalia	617	106	1,476	18	124
	Cat Canyon	3,132	272	4,538	34	230
	Cuyama, South	318	131	2,941	--	--
	Elwood	45	--	--	--	--
	Four Deer Field	39	--	--	--	--
	Guadalupe*	14	3	59	--	--
	Lompoc	396	--	--	--	--
	Orcutt	936	177	3,971	--	--
	Point Conception	25	--	--	--	--
	Russell Ranch*	103	44	1,000	--	--
	Santa Maria Valley	1,305	191	4,117	--	--
	Zaca	133	--	--	--	--
	Subtotal	7,163	931	18,249	52	354
	(Gas Plants)					
	Gaviota	245	263	82	--	83
	Santa Maria	575	617	193	--	194
	Subtotal	820	880	275		277
	(Offshore Facilities)					
	Alegria	10	--	--	--	--
	Carpenteria	176	--	--	--	--
	Dos Cuadras	50	--	--	--	--
	Elwood, South	12	--	--	--	--
	Summerland	28	--	--	--	--
	Subtotal	276				
	Carpenteria Onshore Facility	1,117	542	1,398		166
	COUNTY TOTAL	9,376	2,353	19,922	52	797
VENTURA	Bardsdale	469	--	--	--	--
	Big Mountain	23	6	117	--	--
	Canada Larga	16	--	--	--	--
	El Rio	5	--	--	--	--
	Eureka Canyon	76	--	--	--	--
	Holser	57	--	--	--	--
	Hopper Canyon	59	10	234	--	--
	Los Posas	5	--	--	--	--
	Montalvo, West	128	--	--	--	--
	Moorpark, West	11	--	--	--	--
	Oak Park	30	--	30	--	--
VENTURA (Cont)	Oakridge	16	--	--	--	--
	Ojai	638	67	1,617	--	--
	Oxnard	417	7	1	--	--
	Piru	43	--	--	--	--
	Ramona*	361	26	588	--	--
	Rincon	875	1	--	--	--
	San Miguelito	249	26	588	--	--
	Santa Clara Avenue	42	1	88	--	--
	Santa Paula	121	13	295	--	--
	Santa Susana	36	--	--	--	--
	Saticoy	139	--	--	--	--
	Sespe	1,098	98	2,206	--	--
	Shiells Canyon	190	--	--	--	--
	Simi	165	--	--	--	--
	South Mountain	1924	67	1,587	--	--
	Tapo Canyon, South	82	13	2	6	41
	Tapo Canyon, North	17	--	--	--	--
	Tapo Ridge	5	--	--	--	--
	Temescal	67	--	--	--	--
	Timber Canyon	97	--	--	--	--
	Torrey Canyon	219	3	294	--	--
	Ventura	1939	98	2,206	--	--
	West Mountain	106	--	30	--	--
	Subtotal	9,725	436	9,883	6	41
	(Gas Plants)					
	Montalvo, West	245	263	82	--	83
	Ojai	163	176	55	--	55
	Santa Clara	699	750	235	--	236
	Ventura	493	530	166	--	166
	Subtotal	1,600	1,719	538		540
	Rincon Onshore Facility	593	14	1,233		
	COUNTY TOTAL	11.918	2,169	11,654	6	581

*Fields in more than one county.

NOTE: Dash represents no emissions or less than one metric ton/year.

TABLE 7.2-3. NON-METHANE/TOTAL HYDROCARBON RATIO

	On-Shore	Off-Shore
Storage Tanks[1]	0.95	
Well Cellars[2]	0.60	0.40
Sumps and Pits[2]	0.60	0.40
Valves (Oil Field)[2]	0.40	0.25
Fittings (Oil Fields)[2]	0.40	0.25
Well Heads[1]	0.40	0.25
Pumps (Oil Field)[2]	0.40	0.25
Compressors (Oil Field)[2]	0.40	0.25
IC Engine[3]	0.55	
Heater Treater[3]	0.20	
Steam Generators (Oil)[1]	0.80	
Separators[1]	0.60	0.40
Heaters (Gas Plant)[3]	0.25	
Valves (Gas Plant)[1]	0.55	
Fitting (Gas Plant)[1]	0.55	
Pumps (Gas Plant)[1]	0.55	
Compressors (Gas Plant)[1]	0.55	

(1) Ref. 1

(2) Ref. 1

(3) Ref. Program Data, Chap. 4.0

TABLE 7.3-1. 1979 TOTAL EMISSIONS FROM PETROLEUM PRODUCTION IN FRESNO COUNTY

PROCESS NAME	EMISSIONS BY POLLUTANT IN METRIC TONS PER YEAR THC	NO_x	CO	Part.	SO_x
Tanks Breathing Loss	273.9	0.0	0.0	0.0	0.0
Tanks Working Loss	90.8	0.0	0.0	0.0	0.0
Well Cellars	43.7	0.0	0.0	0.0	0.0
Sumps and Pits	2356.2	0.0	0.0	0.0	0.0
Valves	1016.5	0.0	0.0	0.0	0.0
Fittings	466.9	0.0	0.0	0.0	0.0
Well Heads	1.5	0.0	0.0	0.0	0.0
Pumps	3.7	0.0	0.0	0.0	0.0
Compressors	37.2	0.0	0.0	0.0	0.0
IC Engines	547.7	296.0	6647.2	0.0	0.0
Heater Treater	372.6	9.6	938.6	0.0	0.0
Steamer/Boiler-Oil Fired	27.4	934.9	121.2	426.2	2887.3
Tanks Breathing Loss With Vapor Control	1.3	0.0	0.0	0.0	0.0
Tanks Working Loss With Vapor Control	2.6	0.0	0.0	0.0	0.0
Mechanical Oil/Water Separator	2.1	0.0	0.0	0.0	0.0
Heater Treater-Gas Plant	9.6	2.6	169.9	0.0	0.0
Boiler-Gas Plant	0.5	27.8	2.6	1.5	0.0
Flare-Gas Plant	0.0	0.0	0.0	0.0	831.9
Sumps & Pits-Gas Plant	29.8	0.0	0.0	0.0	0.0
Valves-Gas Plant	871.7	0.0	0.0	0.0	0.0
Fittings-Gas Plant	197.8	0.0	0.0	0.0	0.0
Pumps-Gas Plant	9.0	0.0	0.0	0.0	0.0
Compressor/Driver-Gas Plant	1345.8	2615.2	656.0	0.0	0.3
Total	7708.3	3886.1	8535.5	427.7	3719.5

TABLE 7.3-2. 1979 TOTAL EMISSIONS FROM PETROLEUM PRODUCTION IN KERN COUNTY

PROCESS NAME	EMISSIONS BY POLLUTANT IN METRIC TONS PER YEAR THC	NO_x	CO	Part.	SO_x
Tanks Breathing Loss	2076.8	0.0	0.0	0.0	0.0
Tanks Working Loss	1340.0	0.0	0.0	0.0	0.0
Well Cellars	452.1	0.0	0.0	0.0	0.0
Sumps and Pits	21451.6	0.0	0.0	0.0	0.0
Valves	11514.4	0.0	0.0	0.0	0.0
Fittings	5312.2	0.0	0.0	0.0	0.0
Well Heads	18.7	0.0	0.0	0.0	0.0
Pumps	47.5	0.0	0.0	0.0	0.0
Compressors	501.6	0.0	0.0	0.0	0.0
IC Engines	4179.0	2260.1	50703.8	0.0	1.2
Heater Treater	9850.6	255.1	24809.4	0.0	1.6
Steamer/Boiler-Oil Fired	681.2	23195.5	3007.3	10573.7	71635.0
Tanks Breathing Loss With Vapor Control	26.5	0.0	0.0	0.0	0.0
Tanks Working Loss With Vapor Control	76.4	0.0	0.0	0.0	0.0
Mechanical Oil/Water Separator	56.8	0.0	0.0	0.0	0.0
Fire Flood	353.6	44.1	7.9	132.6	26.5
Steamer/Boiler-Gas Fired	0.0	2.5	0.1	0.0	0.0
Heater Treater-Gas Plant	38.4	10.4	684.7	0.0	0.1
Boiler-Gas Plant	1.8	111.8	10.4	6.0	0.1
Flare-Gas Plant	0.0	0.0	0.0	0.0	3354.2
Sumps & Pits-Gas Plant	119.6	0.0	0.0	0.0	0.0
Valves-Gas Plant	3514.3	0.0	0.0	0.0	0.0
Fittings-Gas Plant	797.3	0.0	0.0	0.0	0.0
Pumps-Gas Plant	36.0	0.0	0.0	0.0	0.0
Compressor/Driver-Gas Plant	5426.3	10544.5	2644.8	0.0	1.2
Total	67372.7	36424.0	81868.4	10712.3	75019.9

TABLE 7.3-3. 1979 TOTAL EMISSIONS FROM PETROLEUM PRODUCTION IN LOS ANGELES COUNTY

PROCESS NAME	EMISSIONS BY POLLUTANT IN METRIC TONS PER YEAR THC	NO_x	CO	Part.	SO_x
Tanks Breathing Loss	1298.4	0.0	0.0	0.0	0.0
Tanks Working Loss	125.2	0.0	0.0	0.0	0.0
Well Cellars	149.8	0.0	0.0	0.0	0.0
Sumps and Pits	2232.0	0.0	0.0	0.0	0.0
Valves	5848.6	0.0	0.0	0.0	0.0
Fittings	2571.8	0.0	0.0	0.0	0.0
Well Heads	3.9	0.0	0.0	0.0	0.0
Pumps	23.1	0.0	0.0	0.0	0.0
Compressors	258.6	0.0	0.0	0.0	0.0
IC Engines	1538.5	831.9	18675.5	0.0	0.3
Heater Treater	1013.1	26.2	2551.6	0.0	0.1
Tanks Breathing Loss With Vapor Control	66.7	0.0	0.0	0.0	0.0
Tanks Working Loss With Vapor Control	66.7	0.0	0.0	0.0	0.0
Mechanical Oil/Water Separator	58.0	0.0	0.0	0.0	0.0
Fire Flood	7.2	0.9	0.1	2.7	0.5
Steamer/Boiler-Gas Fired	0.5	37.5	3.1	1.7	0.0
Heater Treater-Gas Plant	8.6	2.1	155.5	0.0	0.0
Boiler-Gas Plant	0.3	25.2	2.1	1.2	0.0
Flare-Gas Plant	0.0	0.0	0.0	0.0	762.2
Sumps & Pits-Gas Plant	26.9	0.0	0.0	0.0	0.0
Valves-Gas Plant	798.7	0.0	0.0	0.0	0.0
Fittings-Gas Plant	180.9	0.0	0.0	0.0	0.0
Pumps-Gas Plant	8.1	0.0	0.0	0.0	0.0
Compressor/Driver-Gas Plant	1233.2	2396.6	600.9	0.0	0.2
Total	17518.8	3320.4	21988.8	5.6	763.3

TABLE 7.3-4. 1979 TOTAL EMISSIONS FROM PETROLEUM PRODUCTION IN MONTEREY

PROCESS NAME	EMISSIONS BY POLLUTANT IN METRIC TONS PER YEAR THC	NO_x	CO	Part.	SO_x
Tanks Breathing Loss	274.9	0.0	0.0	0.0	0.0
Tanks Working Loss	119.2	0.0	0.0	0.0	0.0
Well Cellars	5.0	0.0	0.0	0.0	0.0
Sumps and Pits	888.0	0.0	0.0	0.0	0.0
Valves	141.0	0.0	0.0	0.0	0.0
Fittings	77.0	0.0	0.0	0.0	0.0
Well Heads	0.8	0.0	0.0	0.0	0.0
Pumps	0.5	0.0	0.0	0.0	0.0
Steamer/Boiler-Oil Fired	53.5	1820.8	236.1	830.1	5623.2
Fire Flood	117.1	14.5	2.6	43.8	8.7
Total	1676.8	1835.3	238.7	873.9	5631.9

TABLE 7.3-5. 1979 TOTAL EMISSIONS FROM PETROLEUM PRODUCTION IN ORANGE COUNTY

PROCESS NAME	EMISSIONS BY POLLUTANT IN METRIC TONS PER YEAR THC	NO_x	CO	Part.	SO_x
Tanks Breathing Loss	500.5	0.0	0.0	0.0	0.0
Tanks Working Loss	75.6	0.0	0.0	0.0	0.0
Well Cellars	68.9	0.0	0.0	0.0	0.0
Sumps and Pits	1932.9	0.0	0.0	0.0	0.0
Valves	3205.8	0.0	0.0	0.0	0.0
Fittings	1475.7	0.0	0.0	0.0	0.0
Well Heads	0.5	0.0	0.0	0.0	0.0
Pumps	15.8	0.0	0.0	0.0	0.0
Compressors	173.5	0.0	0.0	0.0	0.0
IC Engines	928.4	502.2	11263.2	0.0	0.4
Heater Treater	1001.2	25.9	2521.7	0.0	0.1
Steamer/Boiler-Oil Fired	2.8	106.7	13.7	48.4	330.4
Tanks Breathing Loss With Vapor Control	16.2	0.0	0.0	0.0	0.0
Tanks Working Loss With Vapor Control	17.3	0.0	0.0	0.0	0.0
Mechanical Oil/Water Separator	15.4	0.0	0.0	0.0	0.0
Fire Flood	85.3	10.5	1.8	31.9	6.3
Heater Treater-Gas Plant	3.3	0.8	59.3	0.0	0.0
Boiler-Gas Plant	0.0	9.6	0.8	0.4	0.0
Flare-Gas Plant	0.0	0.0	0.0	0.0	291.2
Sumps & Pits-Gas Plant	10.2	0.0	0.0	0.0	0.0
Valves-Gas Plant	305.0	0.0	0.0	0.0	0.0
Fittings-Gas Plant	69.1	0.0	0.0	0.0	0.0
Pumps-Gas Plant	3.1	0.0	0.0	0.0	0.0
Compressor/Driver-Gas Plant	471.0	915.5	229.5	0.0	0.0
Total	10377.5	1571.2	14090.0	80.7	628.4

TABLE 7.3-6. 1979 TOTAL EMISSIONS FROM PETROLEUM PRODUCTION IN SAN LUIS OBISPO COUNTY

PROCESS NAME	EMISSIONS BY POLLUTANT IN METRIC TONS PER YEAR THC	NO_x	CO	Part.	SO_x
Tanks Breathing Loss	54.4	0.0	0.0	0.0	0.0
Tanks Working Loss	11.2	0.0	0.0	0.0	0.0
Well Cellars	7.7	0.0	0.0	0.0	0.0
Sumps and Pits	245.3	0.0	0.0	0.0	0.0
Valves	305.2	0.0	0.0	0.0	0.0
Fittings	140.9	0.0	0.0	0.0	0.0
Pumps	1.3	0.0	0.0	0.0	0.0
Compressors	16.2	0.0	0.0	0.0	0.0
IC Engines	395.2	213.7	4795.1	0.0	0.1
Steamer/Boiler-Oil Fired	17.4	594.5	77.0	271.0	1836.1
Tanks Breathing Loss With Vapor Control	6.7	0.0	0.0	0.0	0.0
Tanks Working Loss With Vapor Control	1.3	0.0	0.0	0.0	0.0
Mechanical Oil/Water Separator	1.3	0.0	0.0	0.0	0.0
Fire Flood	45.3	5.6	1.0	17.0	3.4
Total	1249.4	813.6	4873.1	288.0	1839.6

TABLE 7.3-7. 1979 TOTAL EMISSIONS FROM PETROLEUM PRODUCTION IN SANTA BARBARA COUNTY

PROCESS NAME	EMISSIONS BY POLLUTANT IN METRIC TONS PER YEAR THC	NO_x	CO	Part.	SO_x
Tanks Breathing Loss	476.9	0.0	0.0	0.0	0.0
Tanks Working Loss	64.3	0.0	0.0	0.0	0.0
Well Cellars	136.2	0.0	0.0	0.0	0.0
Sumps and Pits	625.9	0.0	0.0	0.0	0.0
Valves	3132.1	0.0	0.0	0.0	0.0
Fittings	1305.0	0.0	0.0	0.0	0.0
Well Heads	0.3	0.0	0.0	0.0	0.0
Pumps	10.3	0.0	0.0	0.0	0.0
Compressors	203.2	0.0	0.0	0.0	0.0
IC Engines	1493.1	807.4	18116.6	0.0	0.4
Heater Treater	535.8	13.8	1349.4	0.0	0.0
Steamer/Boiler-Oil Fired	3.2	114.4	14.8	52.0	353.4
Tanks Breathing Loss With Vapor Control	12.3	0.0	0.0	0.0	0.0
Tanks Working Loss With Vapor Control	50.6	0.0	0.0	0.0	0.0
Mechanical Oil/Water Separator	12.7	0.0	0.0	0.0	0.0
Steamer/Boiler-Gas Fired	0.1	7.4	0.6	0.3	0.0
Heater Treater-Gas Plant	5.0	1.3	90.5	0.0	0.0
Boiler-Gas Plant	0.2	14.6	1.3	0.7	0.0
Flare-Gas Plant	0.0	0.0	0.0	0.0	443.4
Sumps & Pits-Gas Plant	15.7	0.0	0.0	0.0	0.0
Valves-Gas Plant	464.7	0.0	0.0	0.0	0.0
Fittings-Gas Plant	105.4	0.0	0.0	0.0	0.0
Pumps-Gas Plant	4.8	0.0	0.0	0.0	0.0
Compressor/Driver-Gas Plant	717.5	1394.2	349.7	0.0	0.0
Total	9375.3	2353.1	19922.9	53.0	797.2

TABLE 7.3-8. 1979 TOTAL EMISSIONS FROM PETROLEUM PRODUCTION IN VENTURA COUNTY

PROCESS NAME	EMISSIONS BY POLLUTANT IN METRIC TONS PER YEAR THC	NO_x	CO	Part.	SO_x
Tanks Breathing Loss	1057.8	0.0	0.0	0.0	0.0
Tanks Working Loss	89.1	0.0	0.0	0.0	0.0
Well Cellars	175.0	0.0	0.0	0.0	0.0
Sumps and Pits	1140.5	0.0	0.0	0.0	0.0
Valves	4204.3	0.0	0.0	0.0	0.0
Fittings	1801.6	0.0	0.0	0.0	0.0
Well Heads	0.1	0.0	0.0	0.0	0.0
Pumps	16.1	0.0	0.0	0.0	0.0
Compressors	241.5	0.0	0.0	0.0	0.0
IC Engines	756.0	408.7	9174.4	0.0	0.0
Heater Treater	769.7	19.8	1938.9	0.0	0.0
Steamer/Boiler-Oil Fired	0.3	13.3	1.7	6.0	41.3
Tanks Breathing Loss With Vapor Control	28.7	0.0	0.0	0.0	0.0
Tanks Working Loss With Vapor Control	24.3	0.0	0.0	0.0	0.0
Mechanical Oil/Water Separator	16.4	0.0	0.0	0.0	0.0
Steamer/Boiler-Gas Fired	0.1	8.6	0.6	0.3	0.0
Heater Treater-Gas Plant	6.1	1.5	110.3	0.0	0.0
Boiler-Gas Plant	0.2	17.8	1.5	0.9	0.0
Flare-Gas Plant	0.0	0.0	0.0	0.0	540.5
Sumps & Pits-Gas Plant	19.1	0.0	0.0	0.0	0.0
Valves-Gas Plant	566.4	0.0	0.0	0.0	0.0
Fittings-Gas Plant	128.5	0.0	0.0	0.0	0.0
Pumps-Gas Plant	5.8	0.0	0.0	0.0	0.0
Compressor/Driver-Gas Plant	874.5	1699.4	426.2	0.0	0.1
Total	11922.0	2169.1	11653.6	7.2	581.9

TABLE 7.4-1. 1979 TOTAL EMISSIONS FROM PETROLEUM PRODUCTION IN NORTH CENTRAL AIR BASIN

PROCESS NAME	EMISSIONS BY POLLUTANT IN METRIC TONS PER YEAR THC	NO_x	CO	Part.	SO_x
Tanks Breathing Loss	274.9	0.0	0.0	0.0	0.0
Tanks Working Loss	119.2	0.0	0.0	0.0	0.0
Well Cellars	5.0	0.0	0.0	0.0	0.0
Sumps and Pits	887.9	0.0	0.0	0.0	0.0
Valves	141.0	0.0	0.0	0.0	0.0
Fittings	77.0	0.0	0.0	0.0	0.0
Well Heads	0.8	0.0	0.0	0.0	0.0
Pumps	0.5	0.0	0.0	0.0	0.0
Steamer/Boiler-Oil Fired	53.5	1820.8	236.1	830.1	5623.2
Fire Flood	117.1	14.5	2.6	43.8	8.7
Total	1676.9	1835.3	238.7	873.9	5631.9

TABLE 7.4-2 1979 TOTAL EMISSIONS FROM PETROLEUM PRODUCTION IN SOUTH CENTRAL AIR BASIN

PROCESS NAME	EMISSIONS BY POLLUTANT IN METRIC TONS PER YEAR THC	NO_x	CO	Part.	SO_x
Tanks Breathing Loss	1589.1	0.0	0.0	0.0	0.0
Tanks Working Loss	164.6	0.0	0.0	0.0	0.0
Well Cellars	318.9	0.0	0.0	0.0	0.0
Sumps and Pits	2011.7	0.0	0.0	0.0	0.0
Valves	7641.6	0.0	0.0	0.0	0.0
Fittings	3247.5	0.0	0.0	0.0	0.0
Well Heads	0.4	0.0	0.0	0.0	0.0
Pumps	27.7	0.0	0.0	0.0	0.0
Compressors	460.9	0.0	0.0	0.0	0.0
IC Engines	2644.3	1429.8	32086.1	0.0	0.5
Heater Treater	1305.5	33.6	3288.3	0.0	0.0
Steamer/Boiler-Oil Fired	20.9	722.2	93.5	329.0	2230.8
Tanks Breathing Loss With Vapor Control	47.7	0.0	0.0	0.0	0.0
Tanks Working Loss With Vapor Control	76.2	0.0	0.0	0.0	0.0
Mechanical Oil/Water Separator	30.4	0.0	0.0	0.0	0.0
Fire Flood	45.3	5.6	1.0	17.0	3.4
Steamer/Boiler-Gas Fired	0.2	16.0	1.2	0.6	0.0
Heater Treater	11.1	2.8	200.8	0.0	0.0
Boiler-Gas Plant	0.4	32.4	2.8	1.6	0.0
Flare-Gas Plant	0.0	0.0	0.0	0.0	983.9
Sumps & Pits-Gas Plant	34.8	0.0	0.0	0.0	0.0
Valves-Gas Plant	1031.1	0.0	0.0	0.0	0.0
Fittings-Gas Plant	233.9	0.0	0.0	0.0	0.0
Pumps-Gas Plant	10.6	0.0	0.0	0.0	0.0
Compressor/Driver-Gas Plant	1592.0	3093.6	775.9	0.0	0.1
Total	22546.8	5336.0	36449.6	348.2	3218.7

TABLE 7.4-3. 1979 TOTAL EMISSIONS FROM PETROLEUM PRODUCTION IN SOUTH COAST AIR BASIN

PROCESS NAME	EMISSIONS BY POLLUTANT IN METRIC TONS PER YEAR THC	NO_x	CO	Part.	SO_x
Tanks Breathing Loss	1798.9	0.0	0.0	0.0	0.0
Tanks Working Loss	200.8	0.0	0.0	0.0	0.0
Well Cellars	218.7	0.0	0.0	0.0	0.0
Sumps and Pits	4164.9	0.0	0.0	0.0	0.0
Valves	9054.4	0.0	0.0	0.0	0.0
Fittings	4047.5	0.0	0.0	0.0	0.0
Well Heads	4.4	0.0	0.0	0.0	0.0
Pumps	38.9	0.0	0.0	0.0	0.0
Compressors	432.1	0.0	0.0	0.0	0.0
IC Engines	2466.9	1334.1	29938.7	0.0	0.7
Heater Treater	2014.3	52.1	5073.3	0.0	0.2
Steamer/Boiler-Oil Fired	2.8	106.7	13.7	48.4	330.4
Tanks Breathing Loss With Vapor Control	82.9	0.0	0.0	0.0	0.0
Tanks Working Loss With Vapor Control	84.0	0.0	0.0	0.0	0.0
Mechanical Oil/Water Separator	73.4	0.0	0.0	0.0	0.0
Fire Flood	92.5	11.4	1.9	34.6	6.8
Steamer/Boiler-Gas Fired	0.5	37.5	3.1	1.7	0.0
Heater Treater-Gas Plant	11.9	2.9	214.8	0.0	0.0
Boiler-Gas Plant	0.3	34.8	2.9	1.6	0.0
Flare-Gas Plant	0.0	0.0	0.0	0.0	1053.4
Sumps & Pits-Gas Plant	37.1	0.0	0.0	0.0	0.0
Valves-Gas Plant	1103.7	0.0	0.0	0.0	0.0
Fittings-Gas Plant	250.0	0.0	0.0	0.0	0.0
Pumps-Gas Plant	11.2	0.0	0.0	0.0	0.0
Compressor/Driver-Gas Plant	1704.2	3312.1	830.4	0.0	0.2
Total	27896.3	4891.6	36078.8	86.3	1391.7

TABLE 7.4-4. 1979 TOTAL EMISSIONS FROM PETROLEUM PRODUCTION IN SAN JOAQUIN AIR BASIN

PROCESS NAME	EMISSIONS BY POLLUTANT IN METRIC TONS PER YEAR THC	NO_x	CO	Part.	SO_x
Tanks Breathing Loss	2350.7	0.0	0.0	0.0	0.0
Tanks Working Loss	1430.8	0.0	0.0	0.0	0.0
Well Cellars	495.8	0.0	0.0	0.0	0.0
Sumps and Pits	23807.8	0.0	0.0	0.0	0.0
Valves	12530.9	0.0	0.0	0.0	0.0
Fittings	5779.1	0.0	0.0	0.0	0.0
Well Heads	20.2	0.0	0.0	0.0	0.0
Pumps	51.2	0.0	0.0	0.0	0.0
Compressors	538.8	0.0	0.0	0.0	0.0
IC Engines	4726.7	2556.1	57351.0	0.0	1.2
Heater Treater	10223.2	264.7	25748.0	0.0	1.6
Steamer/Boiler-Oil Fired	708.6	24130.4	3128.5	10999.9	74522.3
Tanks Breathing Loss With Vapor Control	27.8	0.0	0.0	0.0	0.0
Tanks Working Loss With Vapor Control	79.0	0.0	0.0	0.0	0.0
Mechanical Oil/Water Separator	58.9	0.0	0.0	0.0	0.0
Fire Flood	353.6	44.1	7.9	132.6	26.5
Steamer/Boiler-Gas Fired	0.0	2.5	0.1	0.0	0.0
Heater Treater-Gas Plant	48.0	13.0	854.6	0.0	0.1
Boiler-Gas Plant	2.3	139.6	13.0	7.5	0.1
Flare-Gas Plant	0.0	0.0	0.0	0.0	4186.1
Sumps & Pits-Gas Plant	149.4	0.0	0.0	0.0	0.0
Valves-Gas Plant	4386.0	0.0	0.0	0.0	0.0
Fittings-Gas Plant	995.1	0.0	0.0	0.0	0.0
Pumps-Gas Plant	45.0	0.0	0.0	0.0	0.0
Compressor/Driver-Gas Plant	6772.1	13159.7	3300.8	0.0	1.5
Total	75680.5	40310.1	90403.9	11140.0	78739.4

TABLE 7.5-1. 1979 TOTAL EMISSIONS FROM PETROLEUM PRODUCTION IN CALIFORNIA

PROCESS NAME	EMISSIONS BY POLLUTANT IN METRIC TONS PER YEAR THC	NO_x	CO	Part.	SO_x
Tanks Breathing Loss	6013.6	0.0	0.0	0.0	0.0
Tanks Working Loss	1915.4	0.0	0.0	0.0	0.0
Well Cellars	1038.4	0.0	0.0	0.0	0.0
Sumps and Pits	30872.3	0.0	0.0	0.0	0.0
Valves	29367.9	0.0	0.0	0.0	0.0
Fittings	13151.1	0.0	0.0	0.0	0.0
Well Heads	25.8	0.0	0.0	0.0	0.0
Pumps	118.3	0.0	0.0	0.0	0.0
Compressors	1431.8	0.0	0.0	0.0	0.0
IC Engines	9837.9	5320.0	119375.8	0.0	2.4
Heater Treater	13543.0	350.4	34109.6	0.0	1.8
Steamer/Boiler-Oil Fired	785.8	26780.1	3471.8	12207.4	82706.7
Tanks Breathing Loss With Vapor Control	158.4	0.0	0.0	0.0	0.0
Tanks Working Loss With Vapor Control	239.2	0.0	0.0	0.0	0.0
Mechanical Oil/Water Separator	162.7	0.0	0.0	0.0	0.0
Fire Flood	608.5	75.6	13.4	228.0	45.4
Steamer/Boiler-Gas Fired	0.7	56.0	4.4	2.3	0.0
Heater Treater-Gas Plant	71.0	18.7	1270.2	0.0	0.1
Boiler-Gas Plant	3.0	206.8	18.7	10.7	0.1
Flare-Gas Plant	0.0	0.0	0.0	0.0	6223.4
Sumps & Pits-Gas Plant	221.3	0.0	0.0	0.0	0.0
Valves-Gas Plant	6520.8	0.0	0.0	0.0	0.0
Fittings-Gas Plant	1479.0	0.0	0.0	0.0	0.0
Pumps-Gas Plant	66.8	0.0	0.0	0.0	0.0
Compressor/Driver-Gas Plant	10068.3	19565.4	4907.1	0.0	1.8
Total	127800.5	52373.0	163171.0	12448.4	88981.7

SECTION 8.0

REFERENCES

1. Eaton, W. S. et al., "Fugitive Hydrocarbon Emissions From Petroleum Production Operations," American Petroleum Institute, Rockwell International, March, 1980.

2. Taback, H. J., "Determination of Air Pollutant Emission Factors for Thermal Testing Oil Recovery Operations in California," California Air Resources Board Contract No. A7-075-30, KVB, Inc., May, 1980.

3. Harris, G. E. et al., "Assessment of VOC Emissions From Well Vents Associated With Thermally Enhanced Oil Recovery," EPA 90919-81-003, Radian Corporation, September, 1981.

4. Environmental Protection Agency, "Compilation of Air Pollutant Emission Factors," Publication AP-42, 3rd Edition with Supplements, Research Triangle Park, NC, August, 1977.

5. "Munger Oilogram," Averill H. Munger, Publisher, Los Angeles, CA, 90045.

6. California Division of Oil and Gas, "65th Annual Report of the State Oil and Gas Supervisor," Publication PR 06, Sacramento, CA, 1980.

7. Standard Method of Test for Smoke Density in the Flue Gases From Distillate Fuels, ASTM Designation: D 2156-65.

8. Private Communication, Mr. Howard Fernbach, Southland Environmental Co., Seal Beach, CA, October 16, 1981.

9. "Foust's Sales and Service Directory," Long Beach, CA, 1980.

10. "Hydrocarbon Emissions from Fixed-Roof Petroleum Tanks," Western Oil and Gas Association, Engineering-Science, Inc., July, 1977.

11. "Climatology of the U.S.," Report No. 60, Nation Oceanographic and Atmospheric Administration.

12. Taback, H. J. et al., "Control of Hydrocarbon Emissions From Stationary Sources in the South Coast Air Basin," California Air Resources Board Contract No. ARB5-1323, KVB, Inc., June, 1978.

13. Perry, J. H., Ed., Chemical Engineer's Handbook, Fourth Edition, McGraw-Hill, New York.

14. Mark's Standard Handbook for Mechanical Engineers, Eighth Edition, McGraw-Hill Publishing.

SECTION 9.0

GLOSSARY AND ABBREVIATIONS

Bit:	The cutting or boring element used in drilling oil and gas wells
Cut:	The percentage of total fluid produced (oil and water) which is water
Cycline Steam Productions Wells:	A well which is stimulated by steam injection and produced crude following steam injection
Enhanced Recovery:	Recovery of oil by the implementation of an artificially improved depletion process
Fire Flooding Operations:	Insitu combustion to enhance production
First Generation Platforms:	Older offshore production platform generally located in state water
Flow Tanks:	A lease storage tank to which produced oil is run
Free Water Knockout:	A vessel used to remove excessive amounts of free water from produced crude
Gas Lift:	Process of lifting fluids from a well by the continuous injection of high-pressure gas
Glycol Reboilers:	A heater which heats glycol used in a gas treatment system
Heater Treaters:	A heated unit used in oil fields to destabilize oil/water emulsions
Injection Well:	A well used in an oil field for putting fluids into a reservoir
LACT System:	Lease Automatic Custody Transfer; an automatic system for metering the flow of oil and controlling its release into a commercial pipeline
Lease:	A long-term agreement which permits the holder to produce oil within a specific area

Making Hole:	To drill into the earth for the purpose of creating an oil well
Pools:	Reservoir
Primary Oil Recovery:	Use of natural reservoir pressure to produce the crude oil
Second Generation Platform:	Newer offshore production platform generally found in federal waters
Secondary Oil Recovery:	The use of mechanical pumping, water flood, gas injection or other methods to recover additional amounts of oil
Steam Flood:	Injection of steam into an injection well and the production of oil from a nearby well
Steam Soaking:	That period following steam stimulation prior to production from the well
Test and Gauge Tanks:	Small tanks used to measure rate of fluid production from a well
Unitized Production:	A system of operating a certain oil and condensate reservoir in order to conduct some form of pressure maintenance, repressuring, water flood, or other cooperative form to increase ultimate recovery
Wash Tanks:	A tank used to separate crude from water
Water Flooding:	A secondary recovery method in which water is injected into the producing zone
Well Cellars:	An access pit surrounding the well head
Well Vent:	A valve on the well casing used to release pressure
Wild Cat:	A well drilled in an area where no oil or gas production exists
Workover Rig:	A mechanical rig used to clean out or otherwise work on a well in order to increase or restore production

ABBREVIATIONS

A

A/F	Air-to-fuel as in A/F ratio
API	American Petroleum Institute
ASES	Area Source Emission System
AWT	Automatic Well Test

B

Btu	British Thermal Units
bbl	Barrels
Btu/scf	British Thermal Units Per Standard Cubic Foot
b/d/w	Barrels Per Day Per Well
bbl/day	Barrels Per Day

C

cf/bbl	Cubic Feet Per Barrel
cf/day	Cubic Feet Per Day
$C_{\Delta T}$	Temperature Correction Factor
C_{TVP}	Vapor Pressure Correction Factor
C_{VR}	Vapor Recovery Correction Factor
C	Small Tank Adjustment Factor
CN THRD	Threaded Connection
CN FLFF	Flat Faced Flange Connection

D

DOG	California Division of Oil & Gas
D	Tank Diameter

E

F

ft^3/bbl	Cubic Feet Per Barrel
FLGA	Flat Gasket Connection
F_p	Paint Factor

G

GOR	Gas-oil Ratio
g/hp-hr	Grams Per Horsepower Hour
G.L.	Gas Lift Wells

H

HHV	Higher Heating Value
H.L.	Hydraulic Lift
HAFLGA	Hatches Sealed by Flat Gaskets
H	Average Vapor Space Height

I

J

JCL	Job Control Language

K

K_c	Crude Oil Factor
K_n	Turn Over Factor

L

LACT	Lease Custody Transfer
LBOD	Long Beach Oil Development Co.
L_B	Fixed Roof Breathing Loss (lb/day)
L_W	Fixed Roof Working Loss
LPG	Liquefied Petroleum Gas

M

MMBtu	Million Btu
M bbl	Thousand Barrels
MCF/day	Thousand Cubic Feet Per Day
M.W.	Molecular Weight
M	Molecular Weight of Vapor
MCF/day	Thousand Cubic Feet Per Day

N

ng/J	Nanograms Per Joule

O

P

ppm	Parts Per Million
PDL	Program Design Language

R

ROSH	Rotating Shaft Seal

S

scf/lb	Standard Cubic Feet Per Pound
scf/hr	Standard Cubic Feet Per Hour
SCAB	South Coast Air Basin
SSN	Smoke Spot Number

T

TEOR	Thermally Enhanced Oil Recovery
TOC	Total Organic Compounds
THC	Total Hydrocarbons

U

UTM	Universal Transverse Mercator
U/C	Uncontrolled

V

VOC	Volatile Organic Compounds
VLGLBE	Globe Value

W

wscf/hr	Wet Standard Cubic Feet Per Hour

X

Y

Z

APPENDIX

MODEL SOURCE FORM A

-- All cards --

Model	Process Code	Type	SCC Number	Units	Conf. Rating
1	3–10	1	12–19	20	22

Part 2 Name: 24–43

Part 3 Name: 44–63

Type	Pollutant	Emission Factor	Minor Unit	Factor Date (YYMM)	Conf. Rating	% Control	Source Code
2 (11)	4 3 1 0 1 (12–16)	17–26	27–34	35–38	39	40–41	43
3 (11)	4 2 6 0 2 (12–16)	17–26	27–34	35–38	39	40–41	43
4 (11)	4 2 1 0 1 (12–16)	17–26	27–34	35–38	39	40–41	43

KVB72-5810-1309

MODEL SOURCE FORM B

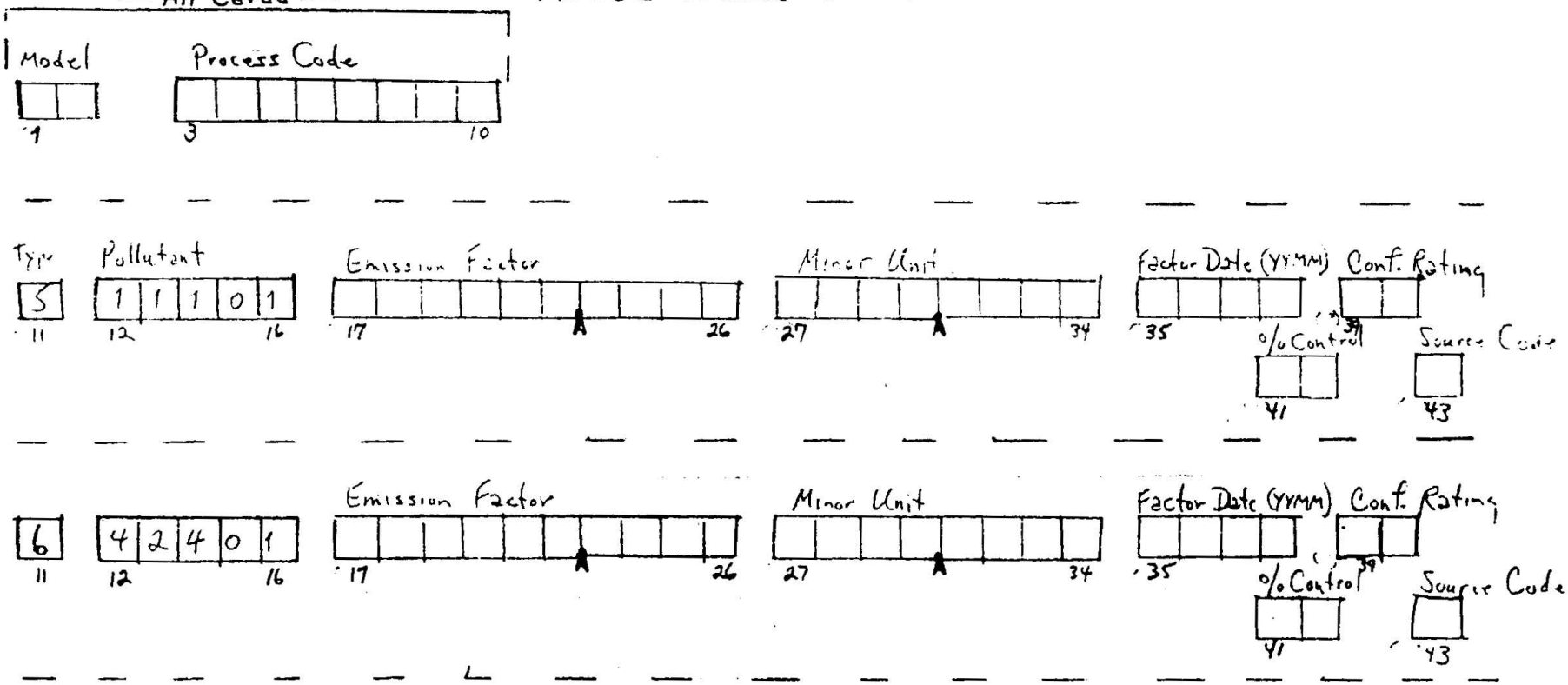

OIL FIELD SOURCE FORM A

CARD 1

Oil Field		Oil Field Name	County	Air Basin
1	1	4 – 23	24 – 27	28 – 30

Inventory Yr	Comments	Total Oil, BBLS
31	33 – 52	53 – 61

CARD 2

Field		Total Wells	Total Leases	Av. GOR
1 2	3	4 – 8	9 – 12	13 – 17

AQCR	UTM Zone
18 – 20	21

	Horizontal	Vertical
1	23 – 26 (0)	27 – 31 (0)
2	32 – 35 (0)	36 – 40 (0)
3	41 – 44 (0)	45 – 49 (0)
4	50 – 53 (0)	54 – 58 (0)
5	59 – 62 (0)	63 – 67 (0)
6	68 – 71 (0)	72 – 76 (0)

Note: ▲ represents implied decimal point

9/8/81

KVB72-5810-1309

OIL FIELD SOURCE FORM B

CARD 3

Oil Field (1–2)	Card (3)	Model	Engines	Model	BTUs	Model	BTUs
	3	1	4–8	2	9–13	3	14–18
		4	BTUs 19–23	5	BTUs 24–28		
		Full 6	Tankage 29–32	C_{TVP} 33–37		$C_{\Delta T}$ 38–42	
		Reduced 7	Tankage 43–46	C_{TVP} 47–51		$C_{\Delta T}$ 52–56	
		Full 8	Thruput 57–61	C_N 62–64			
		Reduced 9	thruput 65–69	C_N 70–72			

CARD 4

Oil Field (1–2)	Card (3)	Model	Wells	Model	Wells	Model	Wells
	4	10	4–8	11	9–13	12	14–18
		13	19–23	14	24–28	15	29–33
		16	34–38	17	39–43	18	44–48
		19	49–53	20	54–58	21	59–63

Note: ▲ represents implied decimal point

9/8/81

00003108
ASSET