Data Summaries Follow

Table 7 - Kern River Summary Hydrocarbon Species by % Mass

	OF-01	OF-02	OF-03	OF-04	OF-05	OF-06
Methane	0.1616	81.3998	62.0949	60.7789	95.9289	4.4862
Ethane	0.0931	0.1565	0.1214	1.3946	0.2717	0.4191
Propane	0.1499	0.0955	0.0781	0.3922	0.0716	0.3025
i-Butane	0.0000	0.0647	0.0531	0.1601	0.0542	0.3003
n-Butane	0.1825	0.0842	0.0684	0.0914	0.0352	0.2139
2,2-dimethylpropane	0.0000	0.3083	0.2510	0.6376	0.1440	0.3897
i-Pentane	0.0000	0.1803	0.1558	0.1549	0.0434	0.4758
n-Pentane	0.0000	0.0321	0.0250	0.0234	0.0066	0.0696
2,2-Dimethylbutane	0.5323	0.3794	0.3487	0.2715	0.0599	0.9194
Cyclopentane	0.0000	0.0000	0.0000	0.0000	0.1704	0.0000
2,3-Dimethylbutane	0.3055	1.3302	1.2881	0.8293	0.0000	2.9941
2-Methylpentane	0.0000	0.0203	0.0174	0.0025	0.0000	0.0637
3-Methylpentane	0.0000	0.0737	0.0712	0.0696	0.0093	0.2005
n-Hexane	0.0724	0.0194	0.0082	0.3656	0.0000	0.0370
Methylcyclopentane	0.0000	0.0121	0.1412	0.0153	0.0000	0.3065
2,4-Dimethylpentane	0.0931	0.2317	0.2654	0.1847	0.0341	0.6060
Benzene	0.1318	0.0137	0.0000	0.2571	0.0000	0.0177
Cyclohexane	0.0000	0.1322	0.1564	0.1040	0.0000	0.3697
2-Methylhexane	0.2952	0.6399	0.7923	0.4250	0.0902	0.0281
2,3-Dimethylpentane	0.0000	0.0000	0.0000	0.0338	0.0088	2.0899
3-Methylhexane	0.0000	0.0223	0.0228	0.0332	0.0000	0.0844
n-Heptane	0.0000	0.0000	0.0000	0.0000	0.0000	0.0000
Methylcyclohexane	0.0000	0.0158	0.0169	0.0162	0.0000	0.1434
2,4-Dimethylhexane	0.1649	0.1780	0.2580	0.1924	0.0000	0.6607
2,3,4-Trimethylpentane	0.2291	0.1985	0.2951	0.2434	0.0341	0.6631
Toluene	0.1059	0.0800	0.1192	0.1048	0.0141	0.2593
2,3-Dimethylhexane	0.0000	0.0466	0.0566	0.1007	0.0170	0.1882
2-Methylheptane	0.0000	0.0298	0.0513	0.0196	0.0115	0.0592
3-Ethylhexane	0.1587	0.1108	0.1775	0.9907	0.0154	0.5925
n-Octane	1.6531	0.8900	1.4281	1.1606	0.0000	1.2543
Ethylbenzene	1.4534	0.4798	0.7963	0.6379	0.1166	0.4558
p-Xylene	0.0384	0.0155	0.0250	0.0187	0.0000	0.1605
m-Xylene	0.0573	0.0091	0.0096	0.0393	0.0000	0.0462
o-Xylene	0.5676	0.1397	0.2040	0.2463	0.0432	0.8641
n-Nonane	0.5269	0.0804	0.1463	0.0154	0.0000	0.7433
i-Propylbenzene	0.3997	0.0751	0.1261	0.0649	0.0157	0.2696
n-Propylbenzene	0.5226	0.0704	0.1432	0.2459	0.0000	0.5119
3-Ethyltoluene	0.6157	0.0754	0.0701	0.3010	0.0459	0.2927
1,3,5-Trimethylbenzene	1.1485	0.1059	0.2325	0.3917	0.0460	0.6053
2-Ethyltoluene	1.0170	0.1053	0.2072	0.4058	0.0187	0.6919
t-butylbenzene	1.4128	0.1515	0.2642	0.2284	0.0781	0.6499
1,2,4-Trimethylbenzene	1.8178	0.1777	0.3203	0.0673	0.0000	0.1576
i-butylbenzene	0.6893	0.0000	0.0000	0.4387	0.0000	0.0000
s-butylbenzene	1.5427	0.1154	0.2455	0.0827	0.0000	0.4963
n-Decane	0.9377	0.0767	0.1528	0.0000	0.0255	0.3824
1,2,3-Trimethylbenzene	1.2611	0.1167	0.2233	0.3045	0.0485	0.5393
1,3-Diethylbenzene	1.5037	0.0883	0.2133	0.3182	0.0000	0.3418
1,4-Diethylbenzene	1.2994	0.0874	0.2261	0.2255	0.0212	0.3497
n-butylbenzene	1.0621	0.0273	0.1696	0.0000	0.0000	0.1890
1,2-diethylbenzene	0.9061	0.0729	0.1544	0.2284	0.0121	0.4960
n-undecane	0.0000	0.0000	0.1151	0.0000	0.0000	0.0089
Other C4	0.0000	0.0000	0.0000	0.1460	0.0000	0.0000
Other C5	0.0000	0.0000	0.0000	0.0566	0.0000	0.0000
Other C6	0.0000	0.6617	0.7074	0.6329	0.0000	3.0064
Other C7	2.7537	2.7837	4.5832	2.6022	0.4848	21.5246
Other C8	9.6620	3.1244	5.1639	5.9405	0.7901	22.4750
Other C9	24.3261	2.7101	5.6391	10.3142	0.8362	19.7780
Other C10	30.0711	1.8284	6.0923	6.6704	0.3693	6.7337
Other C11	10.0782	0.0751	5.4074	0.3234	0.0275	0.0353

Table 8 - Elk Hills Summary Hydrocarbon Species by % Mass

	OF-10	OF-11	OF-12	OF-13	OF-14	OF-15	OF-16	OF-17
Methane	44.8895	37.7408	33.4312	11.8005	31.9680	19.4226	35.1586	26.7810
Ethane	7.9019	7.6800	12.7717	9.5479	15.4250	8.4997	3.7104	7.5402
Propane	13.0885	14.8836	17.2663	17.0718	17.7471	15.3786	12.6201	14.1825
i-Butane	3.1748	3.3993	3.4171	5.7194	3.8778	4.2802	3.2037	5.0340
n-Butane	10.3318	6.7414	10.8072	17.3072	11.4358	3.3683	15.2084	13.2046
2,2-dimethylpropane	0.1106	0.1170	0.1195	0.0427	0.1169	0.6509	0.1633	0.0420
i-Pentane	2.8767	1.5246	3.3797	2.0964	3.6524	1.6843	1.8193	4.4784
n-Pentane	2.7182	1.4220	3.3991	3.2146	3.4792	1.5078	3.5079	3.0220
2,2-Dimethylbutane	0.1824	0.1976	0.1976	0.0925	0.1790	0.0966	0.3145	0.0877
Cyclopentane	0.4262	0.4740	0.4656	0.2939	0.4103	0.1599	0.7297	0.2727
2,3-Dimethylbutane	0.0000	0.0000	0.0000	0.0000	0.0000	0.0000	0.0000	0.0000
2-Methylpentane	1.0121	1.1492	0.9909	1.7049	0.9906	1.0162	0.5465	1.2021
3-Methylpentane	0.6783	0.7795	0.6824	1.6037	0.1099	0.0000	0.4636	1.4428
n-Hexane	1.0797	1.2686	1.0330	3.2012	0.9704	2.4788	0.8823	2.3533
Methylcyclopentane	1.5561	1.9090	1.7244	2.7693	1.5368	1.4020	3.0811	2.4687
2,4-Dimethylpentane	0.0000	0.1213	0.1125	0.0910	0.0928	0.0923	0.1934	0.0791
Benzene	0.0799	0.0912	0.0694	0.4320	0.0674	0.4661	0.0287	0.2989
Cyclohexane	0.0255	0.0307	0.0293	0.0000	0.0237	0.0177	0.0486	0.0164
2-Methylhexane	0.2065	0.2603	0.2276	0.4923	0.1838	0.4907	0.1631	0.3990
2,3-Dimethylpentane	0.2107	0.2603	0.2397	0.2208	0.1905	0.2270	0.4335	0.1875
3-Methylhexane	0.2814	0.3573	0.2411	0.6209	0.2522	0.0000	0.3197	0.5050
n-Heptane	0.3279	0.4367	0.3039	1.0452	0.2691	1.0439	0.1562	0.7316
Methylcyclohexane	0.8685	1.1612	1.0033	1.3402	0.7933	1.3160	2.2377	1.1241
2,4-Dimethylhexane	0.1520	0.0000	0.0000	0.0000	0.0000	0.0000	0.0851	0.1298
2,3,4-Trimethylpentane	0.3075	0.0000	0.3843	0.0000	0.0343	0.0163	0.0302	0.0124
Toluene	0.1012	0.1382	0.0864	0.4755	0.0771	0.4887	0.0738	0.2453
2,3-Dimethylhexane	0.0000	0.0323	0.0273	0.0257	0.0000	0.0277	0.0548	0.0197
2-Methylheptane	0.0924	0.1416	0.0945	0.0000	0.0185	0.0000	0.0000	0.1889
3-Ethylhexane	0.0000	0.0825	0.0333	0.0000	0.0438	0.1267	0.0372	0.0000
n-Octane	0.1923	0.3093	0.2305	0.2394	0.1645	0.2901	0.3371	0.1331
Ethylbenzene	0.0741	0.1219	0.0938	0.0619	0.0506	0.0976	0.2080	0.0386
p-Xylene	0.0195	0.0545	0.0310	0.0306	0.0207	0.0520	0.0467	0.0208
m-Xylene	0.0311	0.0333	0.0210	0.1080	0.0302	0.1659	0.0572	0.0462
o-Xylene	0.0221	0.0378	0.0258	0.0325	0.0183	0.0545	0.0504	0.0160
n-Nonane	0.0260	0.0241	0.0186	0.0471	0.0281	0.0931	0.0408	0.0210
i-Propylbenzene	0.0078	0.0000	0.0034	0.0000	0.0045	0.0071	0.0000	0.0000
n-Propylbenzene	0.0190	0.0138	0.0110	0.0000	0.0125	0.0177	0.0000	0.0000
3-Ethyltoluene	0.0169	0.0107	0.0093	0.0000	0.0050	0.0000	0.0000	0.0000
1,3,5-Trimethylbenzene	0.0137	0.0000	0.0000	0.0000	0.0092	0.0000	0.0000	0.0000
2-Ethyltoluene	0.0000	0.0097	0.0087	0.0000	0.0066	0.0000	0.0000	0.0000
t-butylbenzene	0.0000	0.0115	0.0101	0.0000	0.0000	0.0000	0.0000	0.0000
1,2,4-Trimethylbenzene	0.0350	0.0000	0.0055	0.0000	0.0000	0.0381	0.0000	0.0000
i-butylbenzene	0.0000	0.0000	0.0049	0.0000	0.0000	0.0000	0.0000	0.0000
s-butylbenzene	0.0000	0.0072	0.0000	0.0000	0.0000	0.0000	0.0000	0.0000
n-Decane	0.0075	0.0094	0.0064	0.0000	0.0041	0.0194	0.0451	0.0000
1,2,3-Trimethylbenzene	0.0289	0.0000	0.0000	0.0000	0.0000	0.0000	0.0000	0.0000
1,3-Diethylbenzene	0.0000	0.0000	0.0000	0.0000	0.0000	0.0000	0.0000	0.0000
1,4-Diethylbenzene	0.0000	0.0000	0.0000	0.0000	0.0000	0.0000	0.0000	0.0000
n-butylbenzene	0.0000	0.0000	0.0000	0.0000	0.0000	0.0000	0.0000	0.0000
1,2-diethylbenzene	0.0000	0.0000	0.0000	0.0000	0.0000	0.0380	0.0000	0.0000
n-undecane	0.0065	0.0000	0.0000	0.0000	0.0092	0.0000	0.0000	0.0000
Other C4	0.5783	6.1069	0.0000	5.2441	0.0577	13.7463	0.0000	2.5913
Other C5	1.4612	3.0812	0.7107	6.5695	1.3404	9.1198	1.2993	6.2761
Other C6	2.2153	3.3493	3.1000	3.6424	1.9094	6.4305	6.2250	3.0361
Other C7	1.3296	2.3796	1.5896	2.0599	1.3557	4.3198	3.7814	1.2699
Other C8	0.7813	1.3165	1.0459	0.6321	0.6379	0.9180	1.9979	0.4258
Other C9	0.3196	0.6090	0.4462	0.1228	0.2824	0.3332	0.6220	0.0753
Other C10	0.1121	0.1073	0.0851	0.0000	0.0975	0.0000	0.0177	0.0000
Other C11	0.0219	0.0068	0.0040	0.0000	0.0098	0.0000	0.0000	0.0000

Table 9 - Belridge Summary

Hydrocarbon Species by % Mass

	OF-20	OF-21	OF-22	OF-23	OF-24	OF-25	OF-26	OF-27
Methane	0.6309	47.8262	44.8636	45.7334	25.6069	2.7544	95.9626	98.1996
Ethane	13.8534	10.1622	6.8113	9.2589	7.9440	5.4703	0.5781	0.6958
Propane	20.3860	13.5873	10.3987	13.3879	16.7611	4.5376	0.1836	0.1861
i-Butane	1.9291	2.7121	2.5031	3.0755	4.2843	2.1106	0.0375	0.0213
n-Butane	17.5464	7.7710	8.2760	9.7694	14.0011	6.6176	0.1228	0.0335
2,2-dimethylpropane	0.0456	0.0203	0.0185	0.0251	0.0415	0.2065	0.0794	0.0554
i-Pentane	5.9460	2.9425	3.5109	3.7319	5.0878	5.3812	0.0535	0.0080
n-Pentane	8.3204	3.3931	3.9112	3.8510	5.6848	4.3558	0.0456	0.0079
2,2-Dimethylbutane	0.0964	0.0438	0.0407	0.0409	0.0828	0.2502	0.0000	0.0050
Cyclopentane	0.0000	0.0000	0.1801	0.1537	0.2917	0.6577	0.0000	0.0000
2,3-Dimethylbutane	0.3293	0.1474	0.0000	0.0000	0.0000	0.0000	0.0191	0.0011
2-Methylpentane	1.7627	1.0353	1.3757	1.1674	1.0834	2.1277	0.0223	0.0031
3-Methylpentane	1.6061	0.6445	0.9477	0.7538	1.0913	1.4123	0.0000	0.0000
n-Hexane	3.0647	1.1569	1.5742	1.1753	1.9673	2.3156	0.0206	0.0038
Methylcyclopentane	3.4631	0.0164	0.0160	0.0137	2.8540	2.5628	0.0057	0.0000
2,4-Dimethylpentane	0.1121	0.0442	0.0595	0.0414	0.0880	0.2350	0.0000	0.0000
Benzene	0.3862	0.1231	0.0872	0.0919	0.1998	0.2686	0.0000	0.0050
Cyclohexane	0.0219	0.0085	0.0109	0.0075	0.0177	0.0000	0.0000	0.0000
2-Methylhexane	0.5507	0.1767	0.3242	0.0000	0.3533	0.6553	0.0000	0.0000
2,3-Dimethylpentane	0.3258	0.1429	0.2174	0.2020	0.2560	0.9489	0.0051	0.0000
3-Methylhexane	0.0000	0.2271	0.4621	0.2817	0.4480	0.9310	0.0000	0.0000
n-Heptane	1.2952	0.3164	0.7085	0.3518	0.7147	1.3600	0.0000	0.0009
Methylcyclohexane	0.1831	0.0000	0.0000	0.0840	0.0000	0.4621	0.0000	0.0012
2,4-Dimethylhexane	0.0550	0.1227	0.0364	0.1121	0.0376	0.2385	0.0061	0.0000
2,3,4-Trimethylpentane	0.0309	0.2526	0.5542	0.2322	0.0216	0.3665	0.0799	0.0027
Toluene	0.5882	0.0236	0.3102	0.1370	0.3313	0.4900	0.0000	0.0038
2,3-Dimethylhexane	0.0456	0.0175	0.0310	0.0137	0.0275	0.1998	0.0000	0.0000
2-Methylheptane	0.4294	0.0236	0.0439	0.0197	0.2050	0.7450	0.0078	0.0000
3-Ethylhexane	0.1786	0.0477	0.1203	0.0482	0.0935	0.3599	0.0000	0.0000
n-Octane	0.4324	0.0814	0.0870	0.0351	0.0874	1.3665	0.0088	0.0039
Ethylbenzene	0.1841	0.0755	0.1553	0.0472	0.0741	1.0917	0.0145	0.0051
p-Xylene	0.0000	0.0045	0.1452	0.0592	0.0000	0.2763	0.0000	0.0046
m-Xylene	0.2260	0.0334	0.0765	0.0250	0.0839	0.4733	0.0000	0.0000
o-Xylene	0.0891	0.0056	0.0552	0.0220	0.0280	0.2783	0.0057	0.0035
n-Nonane	0.1393	0.0186	0.0203	0.0370	0.0201	0.2195	0.0095	0.0074
i-Propylbenzene	0.0000	0.0027	0.0034	0.0025	0.0039	0.0743	0.0000	0.0000
n-Propylbenzene	0.0345	0.0234	0.0283	0.0061	0.0094	0.4000	0.0092	0.0064
3-Ethyltoluene	0.0133	0.0072	0.0116	0.0000	0.0093	0.2899	0.0211	0.0097
1,3,5-Trimethylbenzene	0.0269	0.0057	0.0187	0.0041	0.0000	0.0000	0.0186	0.0116
2-Ethyltoluene	0.0258	0.0026	0.0182	0.0038	0.0036	0.1688	0.0118	0.0158
t-butylbenzene	0.0143	0.0084	0.0132	0.0000	0.0000	0.2103	0.0000	0.0000
1,2,4-Trimethylbenzene	0.0066	0.0048	0.0046	0.0164	0.0042	0.4794	0.0000	0.0139
i-butylbenzene	0.0058	0.0000	0.0042	0.0000	0.0000	0.0605	0.0101	0.0000
s-butylbenzene	0.0074	0.0045	0.0045	0.0000	0.0021	0.0878	0.0000	0.0000
n-Decane	0.0057	0.0011	0.0290	0.0112	0.0000	0.0599	0.0184	0.0244
1,2,3-Trimethylbenzene	0.0054	0.0000	0.0000	0.0000	0.0051	0.0000	0.0490	0.0057
1,3-Diethylbenzene	0.0128	0.0000	0.0064	0.0000	0.0000	0.2104	0.0000	0.0015
1,4-Diethylbenzene	0.0000	0.0042	0.0095	0.0000	0.0038	0.2106	0.0192	0.0225
n-butylbenzene	0.0078	0.0057	0.0049	0.0020	0.0000	0.0000	0.0000	0.0203
1,2-diethylbenzene	0.0000	0.0000	0.0000	0.0000	0.0000	0.0000	0.0000	0.0041
n-undecane	0.0000	0.0000	0.0093	0.0000	0.0000	0.0999	0.0219	0.0000
Other C4	0.0000	0.0000	0.0000	0.0000	0.0000	0.0000	0.0000	0.0000
Other C5	2.8126	0.0000	0.6376	0.5484	1.6789	1.3806	0.0553	0.0126
Other C6	6.9258	0.5288	5.9315	3.7219	4.2202	8.7054	0.0935	0.0171
Other C7	3.0713	3.6994	2.9653	1.0916	3.0840	15.5060	0.1773	0.0106
Other C8	1.8956	1.4513	1.6682	0.4752	0.9441	11.9369	0.6540	0.0655
Other C9	0.7019	0.9881	0.6194	0.0943	0.1285	6.6643	0.8882	0.2110
Other C10	0.1335	0.0484	0.0776	0.0302	0.0331	1.3815	0.5560	0.2885
Other C11	0.0394	0.0092	0.0018	0.0056	0.0000	0.3470	0.1279	0.0000

Table 10 - Cat Canyon Summary Hydrocarbon Species by % Mass

OF-40	OF-41	OF-42	OF-43	OF-44	
Methane	40.6929	10.0741	8.0981	0.0000	0.0000
Ethane	8.8839	20.1940	1.5655	1.6118	0.0000
Propane	14.1404	11.3004	4.9484	1.3702	0.0000
i-Butane	3.1034	1.5022	4.5482	0.0000	1.0505
n-Butane	8.2204	4.4444	16.7562	2.4984	0.0000
2,2-dimethylpropane	0.0114	0.0000	0.0443	0.0000	0.0000
i-Pentane	2.8269	1.6489	18.5162	3.5461	4.3902
n-Pentane	0.8501	1.6241	18.2855	4.3522	5.2835
2,2-Dimethylbutane	0.0000	0.0000	0.0000	0.0000	0.0000
Cyclopentane	0.2525	0.1323	0.0000	0.0000	1.0410
2,3-Dimethylbutane	0.0000	0.0000	0.0000	0.0000	0.0000
2-Methylpentane	1.5351	0.6920	5.8657	4.0751	6.1335
3-Methylpentane	1.1323	0.6022	3.7394	0.0000	4.9084
n-Hexane	1.7048	0.9060	4.8494	5.7627	6.6935
Methylcyclopentane	1.1296	1.2395	2.9251	5.2924	5.9473
2,4-Dimethylpentane	0.0375	0.0000	0.0000	0.0000	0.0000
Benzene	0.2509	1.8187	0.3463	9.1484	10.7339
Cyclohexane	0.0000	0.0000	0.0122	0.0000	0.0000
2-Methylhexane	0.3618	0.2747	0.5003	0.0000	1.6592
2,3-Dimethylpentane	0.2302	0.1935	0.3006	0.0000	1.3305
3-Methylhexane	0.6061	0.5048	0.6828	0.0000	2.7133
n-Heptane	0.9354	0.9240	0.7250	5.2258	3.2642
Methylcyclohexane	0.6467	1.0305	0.5577	5.5640	3.2339
2,4-Dimethylhexane	0.0000	0.0461	0.0000	0.0000	1.0936
2,3,4-Trimethylpentane	0.0155	0.0000	0.0075	0.0000	0.0000
Toluene	0.4204	2.8143	0.1548	10.4338	6.7816
2,3-Dimethylhexane	0.0453	0.0744	0.0159	0.0000	0.0000
2-Methylheptane	0.3968	0.6905	0.0994	0.0000	0.0000
3-Ethylhexane	0.1649	0.3057	0.0108	0.0000	0.7464
n-Octane	0.4462	1.1482	0.0601	4.3452	1.8149
Ethylbenzene	0.1989	1.2698	0.0247	4.5312	1.9672
p-Xylene	0.0800	0.3562	0.0077	4.9276	0.6668
m-Xylene	0.1463	1.0711	0.0126	0.0000	1.6627
o-Xylene	0.0813	0.7089	0.0080	4.5835	1.2487
n-Nonane	0.1951	1.5824	0.0082	4.1871	1.1148
i-Propylbenzene	0.0183	0.1644	0.0000	0.0000	0.0000
n-Propylbenzene	0.0456	0.5008	0.0000	0.0000	0.0000
3-Ethyltoluene	0.0446	0.5516	0.0000	0.0000	0.0000
1,3,5-Trimethylbenzene	0.0000	0.0000	0.0000	0.0000	0.0000
2-Ethyltoluene	0.0000	0.1692	0.0000	0.0000	0.0000
t-butylbenzene	0.0337	0.2522	0.0000	0.0000	0.0000
1,2,4-Trimethylbenzene	0.0473	0.6815	0.0000	4.9369	0.0000
i-butylbenzene	0.0000	0.0000	0.0000	0.0000	0.0000
s-butylbenzene	0.0000	0.2217	0.0000	0.0000	0.0000
n-Decane	0.0060	0.0694	0.0000	0.0000	0.0000
1,2,3-Trimethylbenzene	0.0299	0.3868	0.0000	0.0000	0.0000
1,3-Diethylbenzene	0.0246	0.4904	0.0000	0.0000	0.0000
1,4-Diethylbenzene	0.0000	0.0000	0.0000	0.0000	0.0000
n-butylbenzene	0.0000	0.1752	0.0000	0.0000	0.0000
1,2-diethylbenzene	0.0000	0.0000	0.0000	0.0000	0.0000
n-undecane	0.0000	1.2176	0.0000	0.0000	0.0000
Other C4	1.1117	0.0000	0.0000	0.0000	0.0000
Other C5	3.3706	0.6062	2.7335	0.0000	1.3944
Other C6	1.6494	2.0726	2.6472	0.0000	9.5263
Other C7	1.3692	2.4995	0.8324	0.0000	5.7191
Other C8	1.3995	5.4748	0.0995	5.4339	4.5759
Other C9	0.6859	8.4377	0.0106	8.1739	1.7149
Other C10	0.3521	5.1144	0.0000	0.0000	1.5896
Other C11	0.0684	1.7402	0.0000	0.0000	0.0000

Table 11 - Ventura Field Summary Hydrocarbon Species by % Mass

	OF-50	OF-51	OF-52	OF-53
Methane	26.3353	24.7704	12.8696	69.8572
Ethane	6.4585	7.5008	6.8363	9.0459
Propane	18.9621	23.1831	25.1314	4.9068
i-Butane	6.0712	7.6461	7.9999	0.6395
n-Butane	14.4739	16.1895	19.0352	2.1218
2,2-dimethylpropane	0.0146	0.0162	0.0190	0.0000
i-Pentane	5.8607	5.7925	6.7579	2.5646
n-Pentane	5.1406	4.6708	5.8342	2.6707
2,2-Dimethylbutane	0.0000	0.0520	0.0000	0.0235
Cyclopentane	0.0000	0.0000	0.0000	0.4227
2,3-Dimethylbutane	1.5218	1.1875	0.0000	0.0000
2-Methylpentane	0.0000	0.0071	0.0000	0.0000
3-Methylpentane	0.0000	0.8659	1.0630	0.0000
n-Hexane	1.5428	1.1171	1.4054	0.6655
Methylcyclopentane	1.9954	1.2884	1.8668	0.8751
2,4-Dimethylpentane	0.0469	0.0325	0.0415	0.0192
Benzene	0.1318	0.3128	0.1360	0.0970
Cyclohexane	0.0059	0.0000	0.0052	0.0000
2-Methylhexane	0.2858	0.1599	0.2234	0.0914
2,3-Dimethylpentane	0.1590	0.0843	0.1171	0.0511
3-Methylhexane	0.4622	0.2371	0.3428	0.1400
n-Heptane	0.6540	0.2606	0.4833	0.1851
Methylcyclohexane	0.8599	0.2270	0.6997	0.2890
2,4-Dimethylhexane	0.0282	0.0087	0.0000	0.0000
2,3,4-Trimethylpentane	0.0126	0.0000	0.0084	0.0000
Toluene	0.2022	0.2009	0.1689	0.1034
2,3-Dimethylhexane	0.0253	0.0071	0.0153	0.0000
2-Methylheptane	0.0378	0.0000	0.1659	0.0795
3-Ethylhexane	0.1086	0.0000	0.0819	0.0000
n-Octane	0.2432	0.0797	0.1575	0.0881
Ethylbenzene	0.1134	0.0976	0.0743	0.0492
p-Xylene	0.0620	0.0787	0.0368	0.0336
m-Xylene	0.0950	0.0000	0.0745	0.0652
o-Xylene	0.0467	0.0461	0.0341	0.0502
n-Nonane	0.1024	0.0383	0.0606	0.0629
i-Propylbenzene	0.0078	0.0000	0.0000	0.0000
n-Propylbenzene	0.0229	0.0174	0.0000	0.0191
3-Ethyltoluene	0.0000	0.0000	0.0166	0.0000
1,3,5-Trimethylbenzene	0.0199	0.0000	0.0000	0.0000
2-Ethyltoluene	0.0093	0.0000	0.0000	0.0123
t-butylbenzene	0.0117	0.0000	0.0062	0.0000
1,2,4-Trimethylbenzene	0.0351	0.0000	0.0228	0.0000
i-butylbenzene	0.0000	0.0000	0.0000	0.0138
s-butylbenzene	0.0000	0.0000	0.0000	0.0178
n-Decane	0.0196	0.0000	0.0000	0.0100
1,2,3-Trimethylbenzene	0.0068	0.0000	0.0000	0.0539
1,3-Diethylbenzene	0.0000	0.0000	0.0000	0.0259
1,4-Diethylbenzene	0.0000	0.0000	0.0000	0.0000
n-butylbenzene	0.0000	0.0000	0.0000	0.0000
1,2-diethylbenzene	0.0000	0.0000	0.0000	0.0000
n-undecane	0.0205	0.0000	0.0000	0.0000
Other C4	0.0000	0.0246	0.0060	0.0000
Other C5	2.0335	1.4400	2.4045	1.3762
Other C6	2.4888	1.2186	3.7835	0.9365
Other C7	1.7315	0.5669	1.0877	0.6074
Other C8	0.9871	0.3069	0.5952	0.5527
Other C9	0.4512	0.2100	0.2615	0.8476
Other C10	0.0890	0.0568	0.0577	0.3196
Other C11	0.0056	0.0000	0.0123	0.0092

Table 12 - Wilmington Field Summary Hydrocarbon Species by % Mass

	OF-60	OF-61	OF-62	OF-63
Methane	0.0000	69.7258	86.2213	9.3724
Ethane	0.2429	3.4827	2.5933	8.6278
Propane	0.8504	3.9190	1.9722	3.7709
i-Butane	0.8152	2.2601	1.6328	7.6645
n-Butane	2.1302	3.9861	1.9669	14.2861
2,2-dimethylpropane	0.0220	0.0256	0.0258	0.1059
i-Pentane	2.2168	2.5187	1.1618	8.6462
n-Pentane	2.2614	1.9546	0.7548	5.4645
2,2-Dimethylbutane	0.0338	0.0604	0.0351	0.1539
Cyclopentane	0.4349	0.0000	0.0000	0.5612
2,3-Dimethylbutane	0.3434	0.2522	0.1145	0.0000
2-Methylpentane	1.2635	0.8062	0.2607	2.6425
3-Methylpentane	1.0717	0.6593	0.2066	1.9294
n-Hexane	1.3441	0.6473	0.1832	1.9154
Methylcyclopentane	2.5612	0.0000	0.3367	3.1383
2,4-Dimethylpentane	0.1425	0.0687	0.0243	0.1542
Benzene	0.1265	0.0394	0.0052	0.5559
Cyclohexane	0.0358	0.0177	0.0076	0.0316
2-Methylhexane	0.4420	0.1455	0.0371	0.5707
2,3-Dimethylpentane	0.7363	0.2629	0.0868	0.5102
3-Methylhexane	0.8066	0.2506	0.0661	0.8294
n-Heptane	0.9793	0.2182	0.0454	1.0401
Methylcyclohexane	0.5567	0.1322	0.0343	2.0397
2,4-Dimethylhexane	0.8914	0.0382	0.0473	0.1030
2,3,4-Trimethylpentane	2.8710	0.0222	0.1755	0.0523
Toluene	0.5115	0.0617	0.0127	0.1805
2,3-Dimethylhexane	0.1770	0.0270	0.0106	0.0840
2-Methylheptane	0.2675	0.0826	0.0169	0.6672
3-Ethylhexane	0.2710	0.0351	0.0097	0.3136
n-Octane	1.7033	0.1645	0.0527	0.6727
Ethylbenzene	1.5428	0.0704	0.0429	0.5052
p-Xylene	0.7140	0.0002	0.0065	0.0000
m-Xylene	0.6658	0.0293	0.0137	0.5832
o-Xylene	0.4854	0.0184	0.0055	0.2485
n-Nonane	0.1867	0.0000	0.0067	0.3525
i-Propylbenzene	0.0700	0.0005	0.0000	0.0516
n-Propylbenzene	0.4185	0.0134	0.0046	0.1527
3-Ethyltoluene	0.3413	0.0154	0.0000	0.1630
1,3,5-Trimethylbenzene	0.4177	0.0006	0.0000	0.1066
2-Ethyltoluene	0.1949	0.0020	0.0000	0.0694
t-butylbenzene	0.4297	0.0000	0.0000	0.0000
1,2,4-Trimethylbenzene	0.3591	0.0009	0.0000	0.2217
i-butylbenzene	0.3485	0.0007	0.0000	0.0500
s-butylbenzene	0.2913	0.0007	0.0000	0.0608
n-Decane	0.1863	0.0004	0.0000	0.0000
1,2,3-Trimethylbenzene	0.2014	0.0208	0.0000	0.1393
1,3-Diethylbenzene	0.3057	0.0006	0.0000	0.0486
1,4-Diethylbenzene	0.4772	0.0000	0.0000	0.0457
n-butylbenzene	0.4384	0.0012	0.0000	0.0000
1,2-diethylbenzene	0.2090	0.0000	0.0000	0.0000
n-undecane	0.6217	0.0000	0.0000	0.0000
Other C4	0.2737	0.0000	0.0000	0.0000
Other C5	0.0574	0.3113	0.0918	0.9634
Other C6	7.5924	3.7219	0.7104	5.6426
Other C7	12.3951	2.5815	0.5625	5.4870
Other C8	14.6463	1.0133	0.3413	5.4826
Other C9	13.7861	0.2699	0.1006	2.7415
Other C10	11.5726	0.0440	0.0157	0.6598
Other C11	4.6614	0.0181	0.0000	0.1404

Table 13 - West Coyote Summary Hydrocarbon Species by % Mass

	OF-70	OF-71	OF-72	OF-73
Methane	58.1224	35.6628	15.1756	33.8652
Ethane	4.7094	3.3726	5.6015	5.6250
Propane	5.4105	5.2351	10.5062	8.0447
i-Butane	3.2893	3.6774	6.7594	3.6714
n-Butane	5.4490	8.0761	12.7356	7.9733
2,2-dimethylpropane	0.0451	0.0556	0.0896	0.0445
i-Pentane	3.3785	6.4922	8.4747	5.6750
n-Pentane	2.2557	4.1816	5.4918	4.0613
2,2-Dimethylbutane	0.0626	0.0233	0.1885	0.0000
Cyclopentane	0.2334	0.0000	0.0000	0.9262
,3-Dimethylbutane	0.0000	0.5183	0.6525	0.4254
2-Methylpentane	1.1015	0.6451	2.6275	2.3633
3-Methylpentane	0.7976	0.8300	1.9876	1.7445
n-Hexane	0.8718	1.9254	1.9240	1.9775
Methylcyclopentane	1.2895	3.4133	0.0000	3.2691
2,4-Dimethylpentane	0.0657	0.1657	0.1842	0.1464
Benzene	0.2862	1.0242	0.5061	0.7648
Cyclohexane	0.0141	0.0455	0.0430	0.0375
2-Methylhexane	0.2558	0.6520	0.5803	0.6403
2,3-Dimethylpentane	0.2155	0.4700	0.5827	0.4173
3-Methylhexane	0.3641	0.9465	0.8370	0.9254
n-Heptane	0.0516	1.0903	0.9119	1.2199
Methylcyclohexane	0.8363	0.0000	0.0000	1.9907
2,4-Dimethylhexane	0.0436	0.3761	0.0963	0.6066
2,3,4-Trimethylpentane	0.4135	0.6770	0.9547	0.0362
Toluene	0.0930	0.2632	0.2392	0.4144
2,3-Dimethylhexane	0.0351	0.0644	0.0690	0.0570
2-Methylheptane	0.3157	0.0911	0.4542	0.0000
3-Ethylhexane	0.1527	0.2564	0.2328	0.2375
n-Octane	0.1655	0.6430	0.2912	0.2312
Ethylbenzene	0.2061	0.2579	0.2439	0.2070
p-Xylene	0.2752	0.3141	0.2734	0.2357
m-Xylene	0.1314	0.0000	0.1329	0.0000
o-Xylene	0.1084	0.1187	0.1125	0.0911
n-Nonane	0.1806	0.0450	0.1687	0.0945
i-Propylbenzene	0.0104	0.0099	0.0093	0.0072
n-Propylbenzene	0.0494	0.0382	0.0499	0.0304
3-Ethyltoluene	0.0245	0.0187	0.0229	0.0145
1,3,5-Trimethylbenzene	0.0422	0.0000	0.0435	0.0000
2-Ethyltoluene	0.0419	0.0222	0.0441	0.0203
t-butylbenzene	0.0231	0.0157	0.0226	0.0130
1,2,4-Trimethylbenzene 0.0150	0.0092	0.0126	0.0071	
i-butylbenzene	0.0000	0.0000	0.0000	0.0027
s-butylbenzene	0.0000	0.0115	0.0000	0.0082
n-Decane	0.0000	0.0000	0.0933	0.0255
1,2,3-Trimethylbenzene	0.0156	0.0101	0.0161	0.0075
1,3-Diethylbenzene	0.0084	0.0000	0.0000	0.0018
1,4-Diethylbenzene	0.0000	0.0131	0.0000	0.0090
n-butylbenzene	0.0146	0.0000	0.0150	0.0063
1,2-diethylbenzene	0.0046	0.0000	0.0000	0.0019
n-undecane	0.0000	0.0000	0.0000	0.0084
Other C4	0.0000	0.0000	0.0000	0.0000
Other C5	0.3807	4.2101	1.0699	0.1301
Other C6	2.3344	5.1428	9.4645	5.1712
Other C7	1.7070	5.1750	5.3237	3.2849
Other C8	2.4206	2.5361	2.8911	2.4562
Other C9	1.2098	1.0006	1.2675	0.6445
Other C10	0.4144	0.1483	0.4558	0.1150
Other C11	0.0571	0.0283	0.0696	0.0146

Table 14 - Database Format

	Methane	Ethane	Propane	i-Butane	n-Butane	2,2-dimet	i-Pentane	n-Pentan	2,2-Dime	Cyclopen	2,3-Dime	2-Methyl	3-Methyl	n-Hexane	Methylcy	2,4-Dime	Benzene	Cyclohex
OF-01	0.1616	0.0931	0.1499	0.0000	0.1825	0.0000	0.0000	0.0000	0.5323	0.0000	0.3055	0.0000	0.0000	0.0724	0.0000	0.0931	0.1318	0.0000
OF-02	81.3998	0.1565	0.0955	0.0647	0.0842	0.3083	0.1803	0.0321	0.3794	0.0000	1.3302	0.0203	0.0737	0.0194	0.0121	0.2317	0.0137	0.1322
OF-03	62.0949	0.1214	0.0781	0.0531	0.0684	0.2510	0.1558	0.0250	0.3487	0.0000	1.2881	0.0174	0.0712	0.0082	0.1412	0.2654	0.0000	0.1564
OF-04	60.7789	1.3946	0.3922	0.1601	0.0914	0.6376	0.1549	0.0234	0.2715	0.0000	0.8293	0.0025	0.0696	0.3656	0.0153	0.1847	0.2571	0.1040
OF-05	95.9289	0.2717	0.0716	0.0542	0.0352	0.1440	0.0434	0.0066	0.0599	0.1704	0.0000	0.0000	0.0093	0.0000	0.0000	0.0341	0.0000	0.0000
OF-06	4.4862	0.4191	0.3025	0.3003	0.2139	0.3897	0.4758	0.0696	0.9194	0.0000	2.9941	0.0637	0.2005	0.0370	0.3065	0.6060	0.0177	0.3697
OF-10	44.8895	7.9019	13.0885	3.1748	10.3318	0.1106	2.8767	2.7182	0.1824	0.4262	0.0000	1.0121	0.6783	1.0797	1.5561	0.0000	0.0799	0.0255
OF-11	37.7408	7.6800	14.8836	3.3993	6.7414	0.1170	1.5246	1.4220	0.1976	0.4740	0.0000	1.1492	0.7795	1.2686	1.9090	0.1213	0.0912	0.0307
OF-12	33.4312	12.7717	17.2663	3.4171	10.8072	0.1195	3.3797	3.3991	0.1976	0.4656	0.0000	0.9909	0.6824	1.0330	1.7244	0.1125	0.0694	0.0293
OF-13	11.8005	9.5479	17.0718	5.7194	17.3072	0.0427	2.0964	3.2146	0.0925	0.2939	0.0000	1.7049	1.6037	3.2012	2.7693	0.0910	0.4320	0.0000
OF-14	31.9680	15.4250	17.7471	3.8778	11.4358	0.1169	3.6524	3.4792	0.1790	0.4103	0.0000	0.9906	0.1099	0.9704	1.5368	0.0928	0.0674	0.0237
OF-15	19.4226	8.4997	15.3786	4.2802	3.3683	0.6509	1.6843	1.5078	0.0966	0.1599	0.0000	1.0162	0.0000	2.4788	1.4020	0.0923	0.4661	0.0177
OF-16	35.1586	3.7104	12.6201	3.2037	15.2084	0.1633	1.8193	3.5079	0.3145	0.7297	0.0000	0.5465	0.4636	0.8823	3.0811	0.1934	0.0287	0.0486
OF-17	26.7810	7.5402	14.1825	5.0340	13.2046	0.0420	4.4784	3.0220	0.0877	0.2727	0.0000	1.2021	1.4428	2.3533	2.4687	0.0791	0.2989	0.0164
OF-20	0.6309	13.8534	20.3860	1.9291	17.5464	0.0456	5.9460	8.3204	0.0964	0.0000	0.3293	1.7627	1.6061	3.0647	3.4631	0.1121	0.3862	0.0219
OF-21	47.8262	10.1622	13.5873	2.7121	7.7710	0.0203	2.9425	3.3931	0.0438	0.0000	0.1474	1.0353	0.6445	1.1569	0.0164	0.0442	0.1231	0.0085
OF-22	44.8636	6.8113	10.3987	2.5031	8.2760	0.0185	3.5109	3.9112	0.0407	0.1801	0.0000	1.3757	0.9477	1.5742	0.0160	0.0595	0.0872	0.0109
OF-23	45.7334	9.2589	13.3879	3.0755	9.7694	0.0251	3.7319	3.8510	0.0409	0.1537	0.0000	1.1674	0.7538	1.1753	0.0137	0.0414	0.0919	0.0075
OF-24	25.6069	7.9440	16.7611	4.2843	14.0011	0.0415	5.0878	5.6848	0.0828	0.2917	0.0000	1.0834	1.0913	1.9673	2.8540	0.0880	0.1998	0.0177
OF-25	2.7544	5.4703	4.5376	2.1106	6.6176	0.2065	5.3812	4.3558	0.2502	0.6577	0.0000	2.1277	1.4123	2.3156	2.5628	0.2350	0.2686	0.0000
OF-26	95.9626	0.5781	0.1836	0.0375	0.1228	0.0794	0.0535	0.0456	0.0000	0.0000	0.0191	0.0223	0.0000	0.0206	0.0057	0.0000	0.0000	0.0000
OF-27	98.1996	0.6958	0.1861	0.0213	0.0335	0.0554	0.0080	0.0079	0.0050	0.0000	0.0011	0.0031	0.0000	0.0038	0.0000	0.0000	0.0050	0.0000
OF-40	40.6929	8.8839	14.1404	3.1034	8.2204	0.0114	2.8269	0.8501	0.0000	0.2525	0.0000	1.5351	1.1323	1.7048	1.1296	0.0375	0.2509	0.0000
OF-41	10.0741	20.1940	11.3004	1.5022	4.4444	0.0000	1.6489	1.6241	0.0000	0.1323	0.0000	0.6920	0.6022	0.9060	1.2395	0.0000	1.8187	0.0000
OF-42	8.0981	1.5655	4.9484	4.5482	16.7562	0.0443	18.5162	18.2855	0.0000	0.0000	0.0000	5.8657	3.7394	4.8494	2.9251	0.0000	0.3463	0.0122
OF-43	0.0000	1.6118	1.3702	0.0000	2.4984	0.0000	3.5461	4.3522	0.0000	0.0000	0.0000	4.0751	0.0000	5.7627	5.2924	0.0000	9.1484	0.0000
OF-44	0.0000	0.0000	0.0000	1.0505	0.0000	0.0000	4.3902	5.2835	0.0000	1.0410	0.0000	6.1335	4.9084	6.6935	5.9473	0.0000	10.7339	0.0000
OF-50	26.3353	6.4585	18.9621	6.0712	14.4739	0.0146	5.8607	5.1406	0.0000	0.0000	1.5218	0.0000	0.0000	1.5428	1.9954	0.0469	0.1318	0.0059
OF-51	24.7704	7.5008	23.1831	7.6461	16.1895	0.0162	5.7925	4.6708	0.0520	0.0000	1.1875	0.0071	0.8659	1.1171	1.2884	0.0325	0.3128	0.0000
OF-52	12.8696	6.8363	25.1314	7.9999	19.0352	0.0190	6.7579	5.8342	0.0000	0.0000	0.0000	0.0000	1.0630	1.4054	1.8668	0.0415	0.1360	0.0052
OF-53	69.8572	9.0459	4.9068	0.6395	2.1218	0.0000	2.5646	2.6707	0.0235	0.4227	0.0000	0.0000	0.0000	0.6655	0.8751	0.0192	0.0970	0.0000
OF-60	0.0000	0.2429	0.8504	0.8152	2.1302	0.0220	2.2168	2.2614	0.0338	0.4349	0.3434	1.2635	1.0717	1.3441	2.5612	0.1425	0.1265	0.0358
OF-61	69.7258	3.4827	3.9190	2.2601	3.9861	0.0256	2.5187	1.9546	0.0604	0.0000	0.2522	0.8062	0.6593	0.6473	0.0000	0.0687	0.0394	0.0177
OF-62	86.2213	2.5933	1.9722	1.6328	1.9669	0.0258	1.1618	0.7548	0.0351	0.0000	0.1145	0.2607	0.2066	0.1832	0.3367	0.0243	0.0052	0.0076
OF-63	9.3724	8.6278	3.7709	7.6645	14.2861	0.1059	8.6462	5.4645	0.1539	0.5612	0.0000	2.6425	1.9294	1.9154	3.1383	0.1542	0.5559	0.0316
OF-70	58.1224	4.7094	5.4105	3.2893	5.4490	0.0451	3.3785	2.2557	0.0626	0.2334	0.0000	1.1015	0.7976	0.8718	1.2895	0.0657	0.2862	0.0141
OF-71	35.6628	3.3726	5.2351	3.6774	8.0761	0.0556	6.4922	4.1816	0.0233	0.0000	0.5183	0.6451	0.8300	1.9254	3.4133	0.1657	1.0242	0.0455
OF-72	15.1756	5.6015	10.5062	6.7594	12.7356	0.0896	8.4747	5.4918	0.1885	0.0000	0.6525	2.6275	1.9876	1.9240	0.0000	0.1842	0.5061	0.0430
OF-73	33.8652	5.6250	8.0447	3.6714	7.9733	0.0445	5.6750	4.0613	0.0000	0.9262	0.4254	2.3633	1.7445	1.9775	3.2691	0.1464	0.7648	0.0375

I. Discussion of Results

To assess variability introduced by the sampling process, duplicate samples OF-2 and OF-3 were taken from the same point, within 30 minutes of each other. Table 15 shows that these samples agree fairly well with each other. The largest difference was in the methane values: 81.4 vs. 62.0 %. These samples were collected by bagging a valve, and capturing the bagged emissions into a stainless steel canister. It was impossible to keep the sampling time constant for these two runs. The "leak rate" of the sampled valve was not constant. Another potential source of variability is a compositional change in the emissions with respect to time. In any case, most constituents other than methane agreed within 0.1 % absolute, or 30 % relative. These values probably represent realistic estimates of the overall uncertainty in the values listed in the summary tables.

Three samples (OF-43,44 and 60) were found to contain no methane. These samples were obtained from open sumps. The methane content of samples taken directly from well heads at the Kern River Facility ranged from 5 to 80 % of the total hydrocarbons. Since methane was determined separately from the other hydrocarbons, a sensitivity study was undertaken, to estimate the effect of errors in the methane concentration on the overall results. The results of this study (Table 16) show that errors in the methane analysis should not unduly influence the overall results. In general, the overall uncertainty in the % composition values is proportional to the error in the methane concentration.

The analytical methods used in this study yielded chromatograms containing as many as several hundred peaks. As discussed earlier, some peaks remained unidentified, and were listed as "Other Cn". Table 17 shows information on these compounds. The study-wide average for "Others" was 17%. In other words, an average of 83 % of the total hydrocarbon mass was identified. There are a few notable deviations from this average. The average value for "others" in the Kern River field was 36 %, more than twice the overall average. Samples OF-1 and OF-6 show values of about 75 % unidentified compounds. This field produces heavy crude (API gravity: 13.6^{o}) by steamflood. Sample OF-1 came from the headspace of a gage tank open to the atmosphere (no vapor recovery), in close proximity to well 406. The oil in the tank was at 72° C. These two conditions evidently resulted in a depletion of the lighter hydrocarbons, which contribute a fair fraction of the mass for samples taken at other fields. Unlike most other samples, OF-1 showed most of its hydrocarbon mass above the C7 range, with a number of "heavy" peaks not found in other samples. Well head samples taken at well 406 (OF-2 and OF-3) contained 60 - 80 % methane. It is likely that the elevated temperature of all samples in this field is responsible for the higher amounts of heavy hydrocarbons not identified.

Consistent with the original Request for Proposal, results from all light, medium and heavy samples have been summarized in Table 18.

Table 15 - Sampling Variability

	OF-02	OF-03	DIFFERENCE absolute	% relative to mean
Methane	81.3998	62.0949	19.30	26.91
Ethane	0.1565	0.1214	0.04	25.23
Propane	0.0955	0.0781	0.02	20.07
i-Butane	0.0647	0.0531	0.01	19.61
n-Butane	**0.0842**	**0.0684**	**0.02**	**20.80**
2,2-dimethylpropane	0.3083	0.2510	0.06	20.50
i-Pentane	0.1803	0.1558	0.02	14.61
n-Pentane	**0.0321**	**0.0250**	**0.01**	**24.88**
2,2-Dimethylbutane	0.3794	0.3487	0.03	8.44
Cyclopentane	0.0000	0.0000	0.00	N/A
2,3-Dimethylbutane	1.3302	1.2881	0.04	3.21
2-Methylpentane	0.0203	0.0174	0.00	15.31
3-Methylpentane	0.0737	0.0712	0.00	3.41
n-Hexane	**0.0194**	**0.0082**	**0.01**	**81.78**
Methylcyclopentane	0.0121	0.1412	-0.13	-168.42
2,4-Dimethylpentane	0.2317	0.2654	-0.03	-13.54
Benzene	0.0137	0.0000	0.01	N/A
Cyclohexane	0.1322	0.1564	-0.02	-16.75
2-Methylhexane	0.6399	0.7923	-0.15	-21.28
2,3-Dimethylpentane	0.0000	0.0000	0.00	N/A
3-Methylhexane	0.0223	0.0228	-0.00	-2.15
n-Heptane	**0.0000**	**0.0000**	**0.00**	**N/A**
Methylcyclohexane	0.0158	0.0169	-0.00	-6.24
2,4-Dimethylhexane	0.1780	0.2580	-0.08	-36.68
2,3,4-Trimethylpentane	0.1985	0.2951	-0.10	-39.10
Toluene	0.0800	0.1192	-0.04	-39.29
2,3-Dimethylhexane	0.0466	0.0566	-0.01	-19.50
2-Methylheptane	0.0298	0.0513	-0.02	-52.97
3-Ethylhexane	0.1108	0.1775	-0.07	-46.26
n-Octane	**0.8900**	**1.4281**	**-0.54**	**-46.42**
Ethylbenzene	0.4798	0.7963	-0.32	-49.61
p-Xylene	0.0155	0.0250	-0.01	-46.99
m-Xylene	0.0091	0.0096	-0.00	-4.97
o-Xylene	0.1397	0.2040	-0.06	-37.39
n-Nonane	**0.0804**	**0.1463**	**-0.07**	**-58.18**
i-Propylbenzene	0.0751	0.1261	-0.05	-50.64
n-Propylbenzene	0.0704	0.1432	-0.07	-68.25
3-Ethyltoluene	0.0754	0.0701	0.01	7.34
1,3,5-Trimethylbenzene	0.1059	0.2325	-0.13	-74.84
2-Ethyltoluene	0.1053	0.2072	-0.10	-65.23
t-butylbenzene	0.1515	0.2642	-0.11	-54.27
1,2,4-Trimethylbenzene	0.1777	0.3203	-0.14	-57.27
i-butylbenzene	0.0000	0.0000	0.00	N/A
s-butylbenzene	0.1154	0.2455	-0.13	-72.06
n-Decane	**0.0767**	**0.1528**	**-0.08**	**-66.30**
1,2,3-Trimethylbenzene	0.1167	0.2233	-0.11	-62.71
1,3-Diethylbenzene	0.0883	0.2133	-0.12	-82.85
1,4-Diethylbenzene	0.0874	0.2261	-0.14	-88.47
n-butylbenzene	0.0273	0.1696	-0.14	-144.46
1,2-diethylbenzene	0.0729	0.1544	-0.08	-71.68
n-undecane	**0.0000**	**0.1151**	**-0.12**	**N/A**
Other C4	0.0000	0.0000	0.00	N/A
Other C5	0.0000	0.0000	0.00	N/A
Other C6	0.6617	0.7074	-0.05	-6.67
Other C7	2.7837	4.5832	-1.80	-48.85
Other C8	3.1244	5.1639	-2.04	-49.21
Other C9	2.7101	5.6391	-2.93	-70.16
Other C10	1.8284	6.0923	-4.26	-107.67
Other C11	0.0751	5.4074	-5.33	-194.52

AVERAGE1 : all values	AVERAGE1	-0.00	-31.35
AVERAGE2 : excluding methane & OTHERs	AVERAGE2	-0.06	-27.99

Table 16 - Methane Sensitivity Analysis Results

	Methane area, % relative to Nominal Value						
	100	90	110	125	75	150	50
C1	87.038	85.803	88.076	89.355	83.433	90.969	77.051
C2	2.194	2.403	2.018	1.802	2.804	1.529	3.885
C3	1.507	1.651	1.387	1.238	1.926	1.050	2.668
C4	5.126	5.614	4.715	4.210	6.551	3.571	9.075
C5	0.970	1.063	0.893	0.797	1.240	0.676	1.718
C6	1.901	2.082	1.749	1.561	2.429	1.324	3.365
C7	0.939	1.028	0.864	0.771	1.200	0.654	1.662
C8	0.292	0.320	0.268	0.240	0.373	0.203	0.517
C9	0.033	0.036	0.031	0.027	0.042	0.023	0.059
C10	0.000	0.000	0.000	0.000	0.000	0.000	0.000
C11	0.000	0.000	0.000	0.000	0.000	0.000	0.000
TOTAL	100.00	100.00	100.00	100.00	100.00	100.00	100.00

ERRORS						
C1	-1.4%	1.2%	2.7%	-4.1%	4.5%	-11.5%
C2	9.5%	-8.0%	-17.9%	27.8%	-30.3%	77.1%
C3	9.5%	-8.0%	-17.9%	27.8%	-30.3%	77.1%
C4	9.5%	-8.0%	-17.9%	27.8%	-30.3%	77.1%
C5	9.5%	-8.0%	-17.9%	27.8%	-30.3%	77.1%
C6	9.5%	-8.0%	-17.9%	27.8%	-30.3%	77.1%
C7	9.5%	-8.0%	-17.9%	27.8%	-30.3%	77.1%
C8	9.5%	-8.0%	-17.9%	27.8%	-30.3%	77.1%
C9	9.5%	-8.0%	-17.9%	27.8%	-30.3%	77.1%
C10	N/A	N/A	N/A	N/A	N/A	N/A
C11	N/A	N/A	N/A	N/A	N/A	N/A
TOTAL	0.0%	0.0%	0.0%	0.0%	0.0%	0.0%

Table 17 - OIL FIELD SUMMARY - "OTHER Cn", by % Mass

	Other C4	Other C5	Other C6	Other C7	Other C8	Other C9	Other C10	Other C11	TOTAL
OF-01	0.0000	0.0000	0.0000	2.7537	9.6620	24.3261	30.0711	10.0782	76.89
OF-02	0.0000	0.0000	0.6617	2.7837	3.1244	2.7101	1.8284	0.0751	11.18
OF-03	0.0000	0.0000	0.7074	4.5832	5.1639	5.6391	6.0923	5.4074	27.59
OF-04	0.1460	0.0566	0.6329	2.6022	5.9405	10.3142	6.6704	0.3234	26.69
OF-05	0.0000	0.0000	0.0000	0.4848	0.7901	0.8362	0.3693	0.0275	2.51
OF-06	0.0000	0.0000	3.0064	21.5246	22.4750	19.7780	6.7337	0.0353	73.55
Kern River Average									36.40
OF-10	0.5783	1.4612	2.2153	1.3296	0.7813	0.3196	0.1121	0.0219	6.82
OF-11	6.1069	3.0812	3.3493	2.3796	1.3165	0.6090	0.1073	0.0068	16.96
OF-12	0.0000	0.7107	3.1000	1.5896	1.0459	0.4462	0.0851	0.0040	6.98
OF-13	5.2441	6.5695	3.6424	2.0599	0.6321	0.1228	0.0000	0.0000	18.27
OF-14	0.0577	1.3404	1.9094	1.3557	0.6379	0.2824	0.0975	0.0098	5.69
OF-15	13.7463	9.1198	6.4305	4.3198	0.9180	0.3332	0.0000	0.0000	34.87
OF-16	0.0000	1.2993	6.2250	3.7814	1.9979	0.6220	0.0177	0.0000	13.94
OF-17	2.5913	6.2761	3.0361	1.2699	0.4258	0.0753	0.0000	0.0000	13.67
Elk Hills Average									14.65
OF-20	0.0000	2.8126	6.9258	3.0713	1.8956	0.7019	0.1335	0.0394	15.58
OF-21	0.0000	0.0000	0.5288	3.6994	1.4513	0.9881	0.0484	0.0092	6.73
OF-22	0.0000	0.6376	5.9315	2.9653	1.6682	0.6194	0.0776	0.0018	11.90
OF-23	0.0000	0.5484	3.7219	1.0916	0.4752	0.0943	0.0302	0.0056	5.97
OF-24	0.0000	1.6789	4.2202	3.0840	0.9441	0.1285	0.0331	0.0000	10.09
OF-25	0.0000	1.3806	8.7054	15.5060	11.9369	6.6643	1.3815	0.3470	45.92
OF-26	0.0000	0.0553	0.0935	0.1773	0.6540	0.8882	0.5560	0.1279	2.55
OF-27	0.0000	0.0126	0.0171	0.0106	0.0655	0.2110	0.2885	0.0000	0.61
Belridge Average									12.42
OF-40	1.1117	3.3706	1.6494	1.3692	1.3995	0.6859	0.3521	0.0684	10.01
OF-41	0.0000	0.6062	2.0726	2.4995	5.4748	8.4377	5.1144	1.7402	25.95
OF-42	0.0000	2.7335	2.6472	0.8324	0.0995	0.0106	0.0000	0.0000	6.32
OF-43	0.0000	0.0000	0.0000	0.0000	5.4339	8.1739	0.0000	0.0000	13.61
OF-44	0.0000	1.3944	9.5263	5.7191	4.5759	1.7149	1.5896	0.0000	24.52
Cat Canyon Average									16.08
OF-50	0.0000	2.0335	2.4888	1.7315	0.9871	0.4512	0.0890	0.0056	7.79
OF-51	0.0246	1.4400	1.2186	0.5669	0.3069	0.2100	0.0568	0.0000	3.82
OF-52	0.0060	2.4045	3.7835	1.0877	0.5952	0.2615	0.0577	0.0123	8.21
OF-53	0.0000	1.3762	0.9365	0.6074	0.5527	0.8476	0.3196	0.0092	4.65
Ventura Average									6.12
OF-60	0.2737	0.0574	7.5924	12.3951	14.6463	13.7861	11.5726	4.6614	64.98
OF-61	0.0000	0.3113	3.7219	2.5815	1.0133	0.2699	0.0440	0.0181	7.96
OF-62	0.0000	0.0918	0.7104	0.5625	0.3413	0.1006	0.0157	0.0000	1.82
OF-63	0.0000	0.9634	5.6426	5.4870	5.4826	2.7415	0.6598	0.1404	21.12
Wilmington Average									23.97
OF-70	0.0000	0.3807	2.3344	1.7070	2.4206	1.2098	0.4144	0.0571	8.52
OF-71	0.0000	4.2101	5.1428	5.1750	2.5361	1.0006	0.1483	0.0283	18.24
OF-72	0.0000	1.0699	9.4645	5.3237	2.8911	1.2675	0.4558	0.0696	20.54
OF-73	0.0000	0.1301	5.1712	3.2849	2.4562	0.6445	0.1150	0.0146	11.82
West Coyote Average									14.78
ALL FIELD AVERAGE									17.77

Table 18 - OIL FIELD SUMMARY BY TYPE OF CRUDE

	HEAVY		MEDIUM		LIGHT	
	AVERAGE	σ	AVERAGE	σ	AVERAGE	σ
Methane	40.3306	39.9900	35.6790	14.7932	22.3296	18.2560
Ethane	3.1335	5.0954	7.0480	2.2906	11.4976	2.9810
Propane	2.6816	4.0563	13.3730	6.0151	16.8342	2.5576
i-Butane	1.4099	2.0243	4.2404	1.9756	3.7037	1.4627
n-Butane	3.4299	5.0578	10.8996	4.4188	11.4858	6.1301
2,2-dimethylpropane	0.1282	0.1730	0.0576	0.0477	0.1753	0.2683
i-Pentane	2.8847	4.5520	4.4628	1.9424	3.2643	1.6812
n-Pentane	2.5220	4.3954	3.8639	1.2808	3.9830	2.5560
2,2-Dimethylbutane	0.1694	0.2482	0.0934	0.0938	0.1017	0.0487
Cyclopentane	0.1806	0.3014	0.2860	0.2773	0.1728	0.1809
2,3-Dimethylbutane	0.4154	0.7770	0.2691	0.4791	0.0953	0.1455
2-Methylpentane	1.4184	2.0159	0.9545	0.7764	1.3019	0.3951
3-Methylpentane	0.8937	1.3878	0.8830	0.5298	0.7929	0.7804
n-Hexane	1.4916	2.1232	1.4227	0.4918	2.1744	1.0517
Methylcyclopentane	1.4230	1.9021	1.7263	1.1250	1.8375	1.3330
2,4-Dimethylpentane	0.1154	0.1537	0.0873	0.0603	0.0865	0.0252
Benzene	1.3177	3.1774	0.2629	0.2799	0.2950	0.1856
Cyclohexane	0.0482	0.0941	0.0211	0.0164	0.0144	0.0100
2-Methylhexane	0.3843	0.4086	0.3014	0.1874	0.3788	0.1829
2,3-Dimethylpentane	0.3743	0.5728	0.2565	0.1468	0.2214	0.0672
3-Methylhexane	0.4196	0.6670	0.4470	0.2466	0.2200	0.2543
n-Heptane	0.8177	1.3746	0.5367	0.3417	0.7939	0.4691
Methylcyclohexane	0.8028	1.4618	0.7113	0.6985	0.7265	0.6228
2,4-Dimethylhexane	0.2177	0.3263	0.1070	0.1634	0.0356	0.0542
2,3,4-Trimethylpentane	0.2920	0.6669	0.2278	0.2963	0.0668	0.1047
Toluene	1.2527	2.8219	0.1943	0.1002	0.3306	0.2602
2,3-Dimethylhexane	0.0579	0.0676	0.0300	0.0217	0.0233	0.0166
2-Methylheptane	0.1747	0.2636	0.1206	0.1250	0.0943	0.1876
3-Ethylhexane	0.2368	0.2842	0.0928	0.0876	0.0794	0.0719
n-Octane	1.0096	1.0595	0.2069	0.1473	0.2415	0.1326
Ethylbenzene	0.8447	1.1022	0.1289	0.0737	0.0939	0.0534
p-Xylene	0.4054	1.1508	0.1054	0.1068	0.0216	0.0210
m-Xylene	0.2678	0.4639	0.0546	0.0429	0.1127	0.0849
o-Xylene	0.5411	1.0675	0.0541	0.0344	0.0400	0.0329
n-Nonane	0.5212	1.0144	0.0601	0.0515	0.0652	0.0504
i-Propylbenzene	0.0739	0.1086	0.0041	0.0040	0.0029	0.0031
n-Propylbenzene	0.1692	0.2054	0.0197	0.0161	0.0176	0.0128
3-Ethyltoluene	0.1576	0.1963	0.0097	0.0088	0.0051	0.0055
1,3,5-Trimethylbenzene	0.1714	0.3033	0.0089	0.0150	0.0083	0.0111
2-Ethyltoluene	0.1710	0.2772	0.0121	0.0142	0.0070	0.0108
t-butylbenzene	0.2062	0.3513	0.0079	0.0083	0.0045	0.0066
1,2,4-Trimethylbenzene	0.5156	1.1864	0.0105	0.0118	0.0099	0.0161
i-butylbenzene	0.0888	0.1961	0.0016	0.0036	0.0012	0.0026
s-butylbenzene	0.1747	0.3680	0.0032	0.0053	0.0024	0.0034
n-Decane	0.1078	0.2289	0.0161	0.0244	0.0061	0.0078
1,2,3-Trimethylbenzene	0.1848	0.3104	0.0090	0.0146	0.0011	0.0024
1,3-Diethylbenzene	0.1971	0.3609	0.0027	0.0067	0.0026	0.0057
1,4-Diethylbenzene	0.1658	0.3163	0.0022	0.0043	0.0008	0.0019
n-butylbenzene	0.1157	0.2629	0.0027	0.0051	0.0027	0.0038
1,2-diethylbenzene	0.1157	0.2365	0.0004	0.0012	0.0076	0.0170
n-undecane	0.1158	0.3117	0.0028	0.0057	0.0018	0.0041
Other C4	0.0851	0.2659	0.5817	1.6110	3.8096	5.9979
Other C5	0.6130	1.0097	1.7962	1.5924	3.9684	3.7846
Other C6	2.6326	3.1626	3.8962	2.1408	3.8874	2.7817
Other C7	4.5485	5.9753	2.3109	1.4970	2.9012	1.2015
Other C8	5.4600	5.9669	1.3375	0.8678	1.1070	0.5526
Other C9	5.9605	7.1701	0.5505	0.3784	0.4857	0.3519
Other C10	4.0744	7.2816	0.1325	0.1391	0.0559	0.0593
Other C11	1.2806	2.7259	0.0148	0.0207	0.0117	0.0162

III. References Cited

1. Oliver, Karen D., Joachim D. Pleil, *Atmos. Environ.*, **20**, 1403-1411 (1983)
2. Castronovo, Cynthia L., "Determination of Hydrocarbon Emissions From Oil Field Production Sumps", California Air Resources Board, Stationary Source Division, ARB/SS-87-05, December 1986
3. Measurement of Gaseous Emission Rates From Land Surfaces Using an Emission Isolation Flux Chamber -User's Guide", U.S. Environmental Protection Agency, Environmental Monitoring Systems Laboratory, Las Vegas (February 1986)

Other References

1 Compendium of Methods for the Determination of Toxic Organic Compounds in Ambient Air, U.S. Environmental Protection Agency, Environmental Monitoring Systems Laboratory, Research Triangle Park, NC 27711
2. Procedures for the Sampling and Analysis of Atmospheric Toxic Compounds, California Air Resources Board, Haagen-Smit Laboratory Division

APPENDIX A - Key Personnel Contacts

Name	Company	Telephone
Ron James, Div. Supt.	Union Oil	(805) 543-3108
Steven Woodruff	Chevron	(805) 395-6312
Steven Zeeman	Chevron	(415) 842-0025
Michael Rutledge	Texaco	(805) 762-7331
Fred Hagist, Env. Spec.	Kern River	(805) 399-2961
Mark Shimarian	THUMS Long Beach Co.	(213) 436-9211
Jack Caufield	Bechtel	(805) 763-6632
Darryl Gunderson	Shell	(805) 326-5279
Sam Duran	Texaco	(805) 648-8243

APPENDIX B - PHOTOGRAPHS OF SELECTED SAMPLING SITES

Key for Oil Field Photos

1. bagged valve sampling
   Kern River

2. tank roof hatch sampling
   Kern River

3. Teflon bag buffer
   Belridge

4. casing valve sampling
   Belridge

5. production header
   Belridge

6. vapor recovery compressor
   Elk Hills

7. sump sampler
   Cat Canyon

8. sump sampler
   Cat Canyon

9. sump cover
   Wilmington

10. sump sampling
    Wilmington

11. flux box on sump
    Wilmington

12. casing valve
    Wilmington

tank roof hatch sampling
Kern River

casing valve sampling
Belridge

bagged valve sampling
Kern River

Teflon bag buffer
Belridge

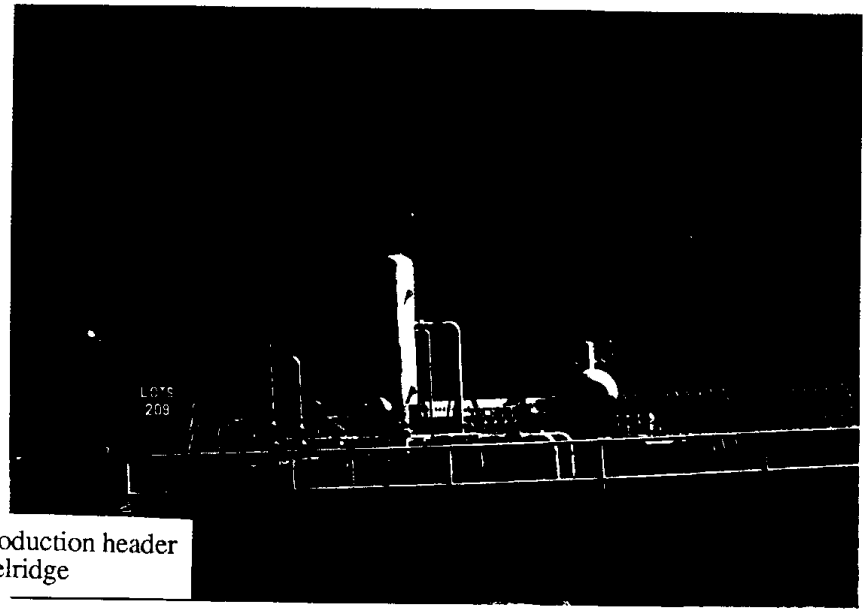

production header
Belridge

vapor recovery compressor
Elk Hills

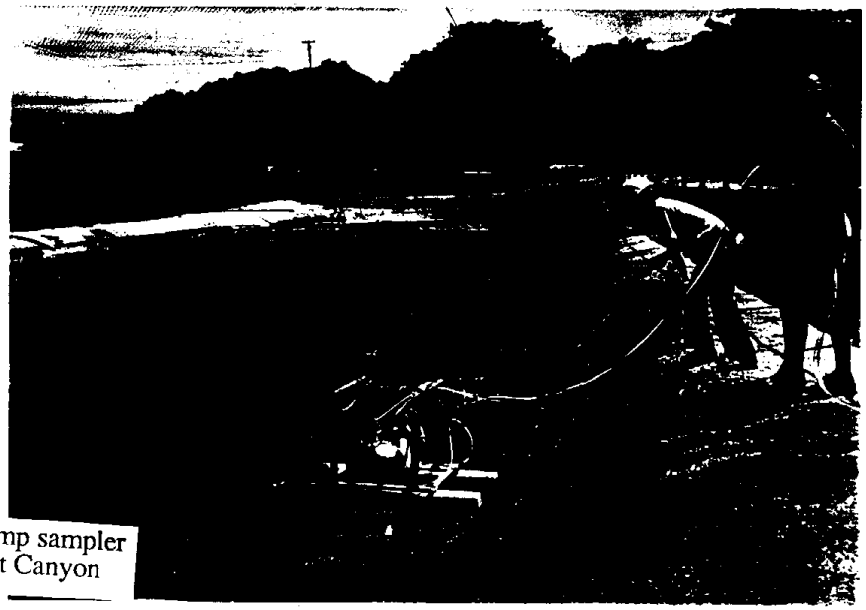

sump sampler
Cat Canyon

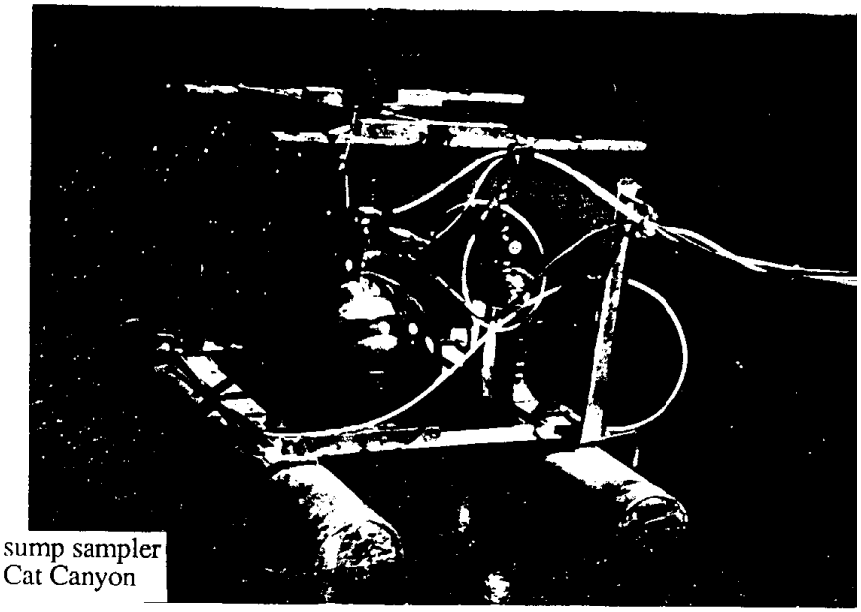

sump sampler
Cat Canyon

sump cover
Wilmington

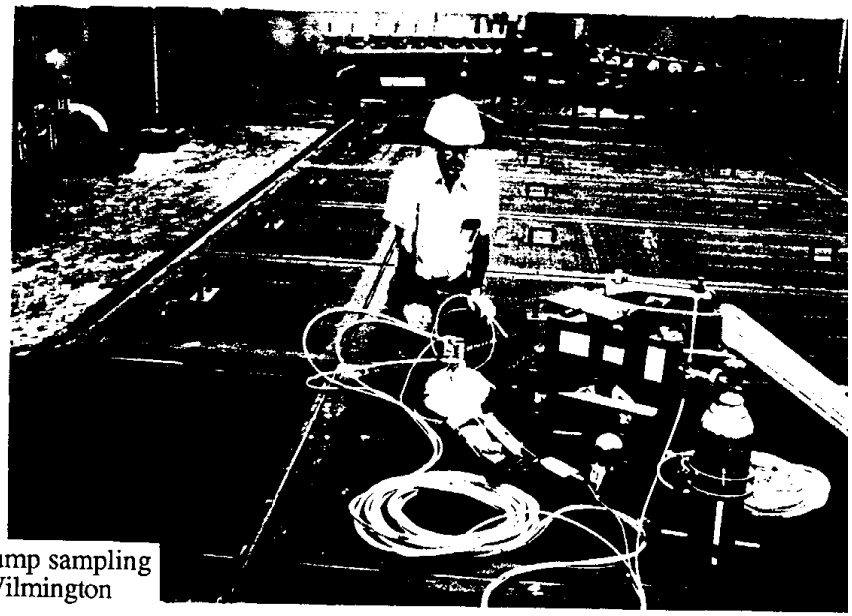

sump sampling
Wilmington

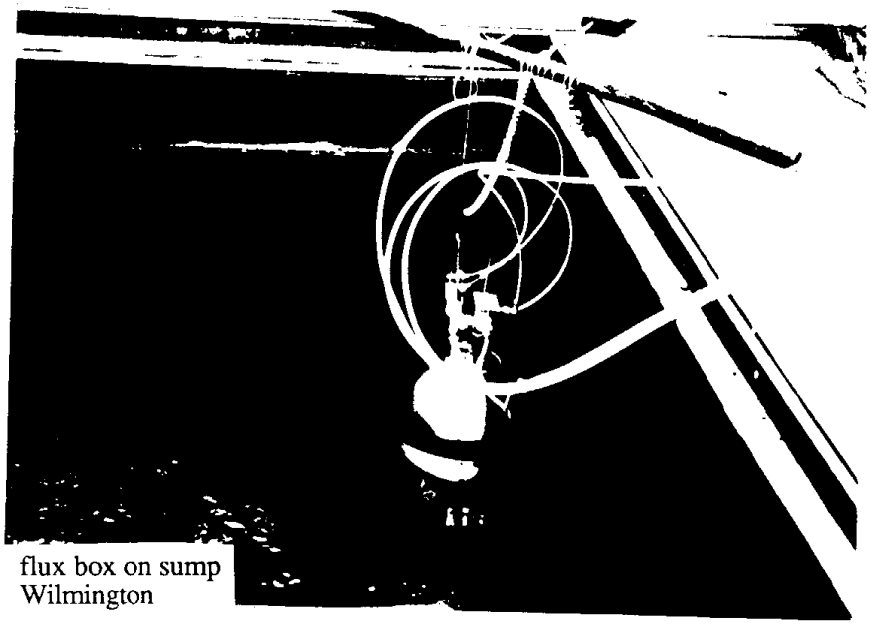

flux box on sump
Wilmington

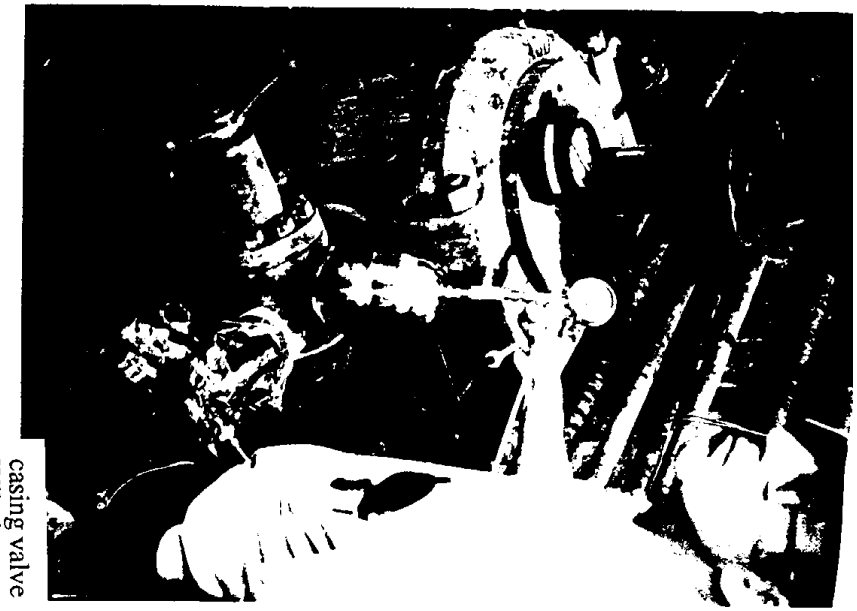

casing valve
Wilmington

APPENDIX C -Protocol for Sampling Fugitive Emissions from Oil Production Facilities

1. Applicability

1.1 The procedures described herein will be applied to sampling fugitive hydrocarbon emissions from a variety of sources found in California oil production fields.

1.2 Sources to be tested by this procedure will have been screened for positive leakage by a soap bubble test (if applicable), and screened for positive hydrocarbon content by a portable hydrocarbon analyzer (OVA 128 or Gastech Analyzer).

2. Method

2.1 Leaking components will be isolated by a Teflon shroud.

2.2 Emissions will be collected in evacuated, passivated stainless steel canisters.

2.2.1 If component leak rate is high, emissions filling the shroud will be collected directly.

2.2.2 If component leak rate is low, zero air will be permitted to flow into the shroud, and diluted emissions at the shroud outlet will be collected as above.

2.3 Sumps and pits will have a portion of their surface isolated by a flux chamber.

2.4 Zero air will be permitted to enter the chamber and mix with the emissions.

2.5 The diluted emissions at the chamber outlet will be collected in evacuated stainless steel canisters.

2.6 The headspace of storage tanks will be accessed via roof hatches.

2.7 Tank headspace will be collected in evacuated stainless steel canisters.

2.8 Analysis will be performed, using gas chromatography, with flame ionization or mass spectrometric detection, as appropriate.

3. Components

3.1 A cylinder of zero air, containing less than 0.1 PPM hydrocarbons.

3.1.1 A size 3 cylinder (6" x 10", 30 ft^3 @ 2000 PSIG) of Ultra Zero Air, from Matheson, Cucamonga, CA.

3.1.2 A non-contaminating manual central valve, #4351, CGA 590 from Matheson, Cucamonga, CA.

3.2 Teflon bags, various sizes from 3 liter to 20 liters, from Berghof, Inc. , Concord, CA.

3.3 A rotameter to monitor flow of zero air, from Ace Glass, Vineland, NJ.

3.4 Adhesive tapes in a variety of widths.

3.5 SUMMA-passivated stainless steel canisters, 3.2 liter.

3.6 Stainless steel or other inert flux chamber.

3.7 Combination pressure-vacuum gauge for field check of canister pressure.

3.8 Teflon tubing, for use in sampling lines, Berghof, Concord, CA.

4. Procedure

4.1 The leaking component is isolated, a Teflon bag of appropriate size, sealed with tape or an elastic band.

4.1.1 The shroud is leak-checked by inflation with zero air. Leaking seams are identified and repaired.

4.1.2 The contents of the shroud are expelled by compression of the Teflon bag.

4.1.3 If the component leak rate is high, the shroud will re-inflate.

4.1.4 Perform another empty/fill cycle.

4.1.5 Complete sample ID sheet with component description, and canister number.

4.1.6 Attach vacuum gauge to sampling canister, open canister valve just long enough to note and record pressure.

4.1.7 Attach sampling canister to shroud exit part.

4.1.8 When shroud is fully inflated, slowly open canister valve, and allow sample to fill canister.

4.1.9 When canister contents are at atmospheric pressure, close canister valve and remove canister from shroud.

4.1.10 If component leak rate is low, fill shroud by metering in zero air at no more than 500 mL/min. Allow at least 3 shroud volumes of air to flow before sampling as above.

4.2 For sumps and pits, place emission isolation chamber on surface.

4.2.1 Meter in zero air at 2-5 liters/min. Allow at least 3 chamber volumes of air to flow before sampling.

4.2.2 Perform canister pressure check as in 4.1.6.

4.2.3 Attach canister to chamber outlet port, and slowly open canister valve.

4.2.4 When canister contents are at atmospheric pressure, close canister valve and remove canister.

4.3 For storage tanks, locate access hatch.

4.3.1 Perform canister pressure check as in 4.1.6.

4.3.2 Attach 1/4" O.D. stainless steel sampling probe to canister.

4.3.3 Open access hatch enough to insert probe well into tank headspace.

4.3.4 Open canister valve, and allow sample to fill canister.

4.3.5 When canister contents are at atmospheric pressure, close canister valve, withdraw sampling probe and close hatch.

APPENDIX D - ANALYTICAL METHODOLOGY AND CALIBRATION

5. ANALYTICAL METHODOLOGY AND CALIBRATION

5.1 Introduction to Analytical Methodology

Environmental Analytical Service, Inc. (EAS) performed the chemical analysis of diluted engine exhaust and bagged component samples using dedicated gas chromatographs (GC) equipped with flame ionization detectors (FID). The FID provides maximum sensitivity for hydrocarbons and has a selective response to hydrocarbon atoms. With proper gas chromatographic separation methods, the concentration of components in complex mixtures can be accurately determined. A GC equipped with a mass spectrometer detector (MSD) was used for confirmation of compound identities in collected samples. These methods provided complete compound speciation for all photochemically reactive organic compounds (PROC) as described in the EPA document Guidance for the Collection and use of Ambient Hydrocarbon Species Data in Development of Ozone Control Strategies (Singh, 1980). The following sections describe the analytical methods EAS used for the fugitive emissions study.

5.1.1 Analysis of Methane

Methane in the collected samples was analyzed using a Carle AGC 100 isothermal gas chromatograph. The methane was separated from air and CO using a 6' Molecular Sieve 5A Column at 50 °C. The helium carrier gas flow rate used was 30 mL/min. Air pressure was maintained at 16 psig and hydrogen pressure at 22 psig, as recommended by the manufacturer. A 2.0 mL sampling loop was used to measure the sample size. The sample loop was kept in a thermostated oven to maintain constant volume. The peaks were integrated using a HP 3393A computing integrator which directly calculated the methane concentration in ppmC. The relative precision for methane at 1,725 ppbvC is 0.2 to 0.4%. The response has been demonstrated to be linear to 20 ppmvC.

5.1.2 Light Hydrocarbon Analysis (C2 to C4) at Low Concentrations

The light hydrocarbons were analyzed using a GC/FID packed column procedure. The column and procedure used for analysis is recommended by EPA and described in California Air Resources Board Method 104. The column used was 1/8" by 10' stainless steel packed with phenyl-isocyanate on Durapack 80/100 mesh. The gas chromatograph used was an HP 5890 with a Model HP3393A computing integrator equipped with chart readout. A 100 to 500 mL gas sample was concentrated using a glass bead freezeout loop procedure. The column was operated isothermally at 28 °C.

A diagram for the instrumental set-up for light hydrocarbon analysis is shown in Figure 5.1.1. The sample canister is connected to a counterflow dryer made of Nafion tubing. The dryer removes water vapor from the sample before analysis. The sample loop is immersed in a Dewar flask filled with liquid oxygen, which traps out hydrocarbons from C2 to C10 quantitatively. The sample is pulled through the glass bead freezeout loop by vacuum. The volume of sample was determined by measuring the pressure drop in a 1.2 liter canister. A precision vacuum test gauge was used to measure the pressure change from which the volume of sample can be calculated (see Section 6.3.3). The system can be used to accurately measure a sample size of 100 to 500 mL.

Once the constituents are trapped, the six port valve is switched from <load> to <analyze>, and the freezeout loop is placed in 80 °C water to thermally desorb the hydrocarbons. The desorbed compounds flow to a 1/8" by 10' stainless steel column packed with phenylisocyanate on Durapack 80/100 mesh. Analysis is performed isothermally at 28 °C. The column flow is controlled by column head pressure and is maintained at 20 psig to give a flow of 40 mL/min. The hydrocarbons are analyzed on a FID detector. The operating conditions are summarized in Table 5.1.

5.1 LIGHT HYDROCARBON ANALYSIS SETUP

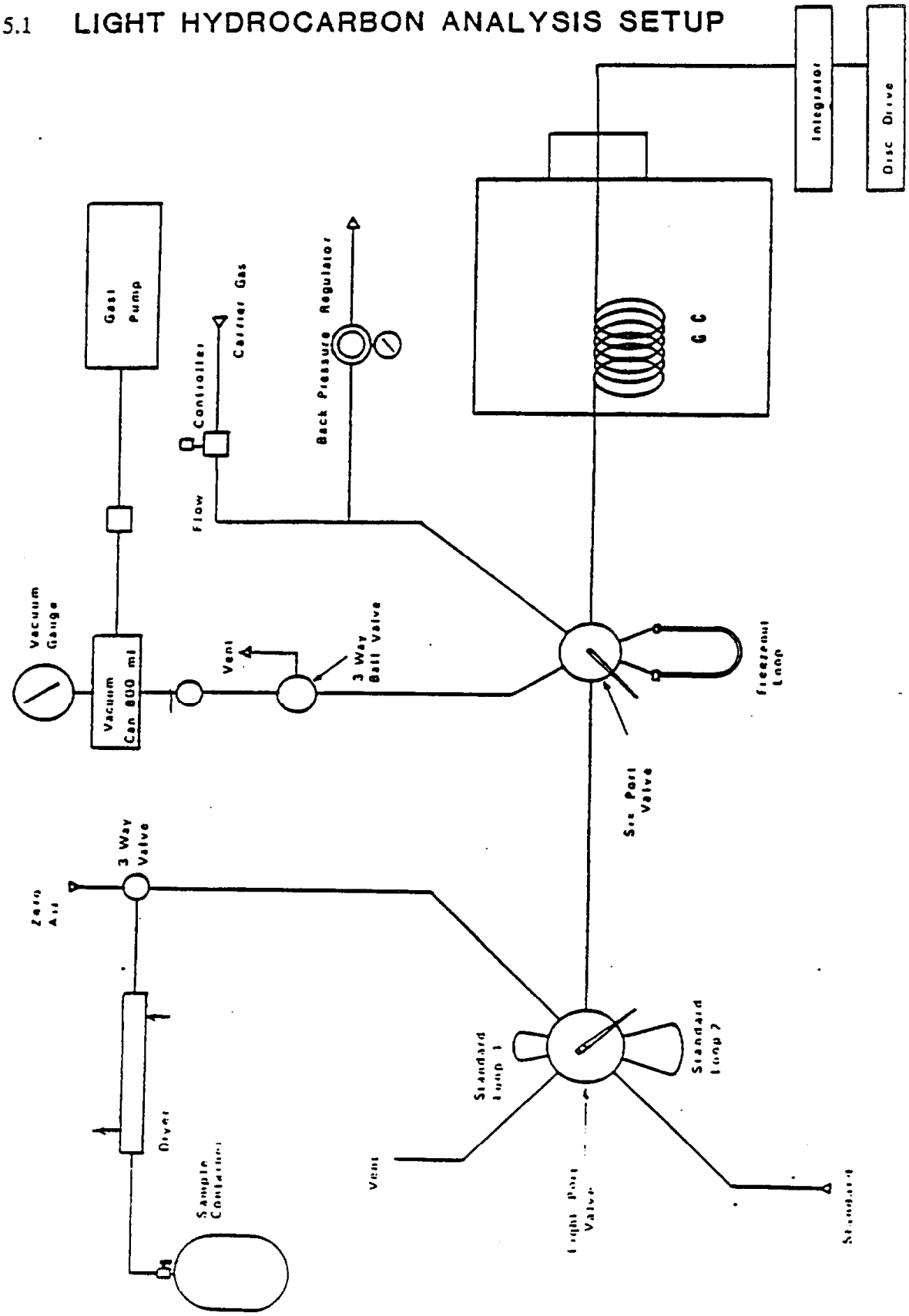

TABLE 5.1

OPERATING CONDITIONS

METHANE -

Flows -
Helium 30 ml/min
Hydrogen 30 ml/min
Gas Pressures -
Helium (Column Pressure) 40 psig
Hydrogen (Flame) 24 psig
Air (Flame) 15 psig
Temperature Program - 50 C
Detector Temperature - 150 C
Sample Size - 1.0 ml

LIGHT HYDROCARBONS -

Flows -
Helium 29 ml/min
Hydrogen 31 ml/min
Air 340 ml/min
Gas Pressures -
Helium (Column Pressure) 40 psig
Hydrogen (Flame) 17.5 psig
Air (Flame) 34 psig
Temperature Program - 30 C
Detector Temperature - 250 C
Sample Size - 500 ml

HEAVY HYDROCARBONS -

Flows -
Air 420 ml/min
Nitrogen 43 ml/min
Gas Pressures -
Hydrogen (Column Pressure) 7 psig
Hydrogen (Flame) 17 psig
Air (Flame) 35 psig
Nitrogen (Make-up Gas) 30 psig
Temperature Program- -20C for 2 min, Program Rate 6 C/min
Detector Temperature - 275 C
Sample Size - 500 ml

The peak areas were integrated using an HP 3393A computing integrator with chart recorder. The charts were examined to verify proper system operation and chromatographic resolution. The integrated data were used to calculate the concentration of the constituents. These results were compared with standard runs, and quantified against a commercial propane standard that is traceable to NBS standards (see Section 5.4.2). Response factors of hydrocarbons other than propane are based on carbon number and checked experimentally and against literature values (Dietz, 1967). Hard copies of the chromatograms, and integrated data are EAS proprietary materials which are stored permanently at the laboratory for a five year period. These materials are available for inspection by the client at the EAS laboratory and are not released in copy form to the client.

Analysis of Light Hydrocarbons (C2 to C6) at High Concentrations.

Some light hydrocarbons from bagged component samples were present at high concentrations. These samples were analyzed on the Carle AGC 100 GC using a 1/8" x 30' column containing 23 % SP-1700 on 80/100 Chromosorb PAW operating at 75 °C, isothermal. A 1.0 mL sample loop with backflush was used for direct injection. Concentrations in the 0.1 percent to 100 percent range were measured using a thermal conductivity detector (TCD). The precision for this method at 5 percent concentration is 0.5 percent. For concentrations in the 1 to 1000 ppmvC range, a FID was used. The precision at 9.5 ppmv is 1.0 percent. EAS maintains a complete line of commercial light hydrocarbon standards spanning the range of 10 ppmv to 10 percent. The results were integrated using an HP 3393A integrator and the concentrations of the individual hydrocarbons were determined by transferring the integrated areas into a HP 150 computer using a LOTUS 1-2-3 spreadsheet.

5.1.3 Heavy hydrocarbon and Oxygenates Analysis (C5 to C10)

The heavy hydrocarbons and oxygenates (aldehydes and ketones) were analyzed using an HP 5890 with a fused silica capillary column. This method was described in Sing (1980). This publication describes the use of a canister-based system in conjunction with a freezeout loop for the analysis of sub-par billion hydrocarbons and stable oxygenates. The analysis procedure is similar to that used by Westburg (1984) and Rasmussen (1987). The capillary column provides the required resolution to separately identify the individual reactive organic compounds. Major components that cannot be identified using FID were analyzed for confirmation on an HP 5890/5970 GC/MSD system as described in EPA Method TO-14. A diagram for the instrumental set-up is shown in Figure 5.1.2. The heavy hydrocarbons are analyzed by passing the sample through a Nafion dryer into the 8" glass bead freezeout loop immersed in liquid oxygen. The components are desorbed into a fused silica cryofocussing loop with 80 °C hot water. They are then desorbed from the cryofocus loop and the components are separated using a 100-meter 0.25-micron fused silica capillary column with a 0.5-micron coating. The column is programmed from -20 °C to 200 °C at 3 °C/min. Total analysis time is 60 minutes The method detection limit for this method is about 0.1 ppbvC for most compounds and the analytical precision at 10 ppbvC is 5 percent. The compounds are detected on a FID set to operate at high sensitivity A detailed description of the analytical procedure is given in section 5.2.3. Chromatograms were integrated using an HP 3393A computing integrator and stored on a HP 9114 disk drive for reintegration or further examination if required at a later date. Compounds were calibrated using an NBS-traceable propane/hexane/ benzene standard. On the FID, hydrocarbons have a uniform response based on the number of carbon atoms. Data from the integrator were entered into a LOTUS 1-2-3 spreadsheet to generate the final report.

5.2

HEAVY HYDROCARBON ANALYSIS SETUP

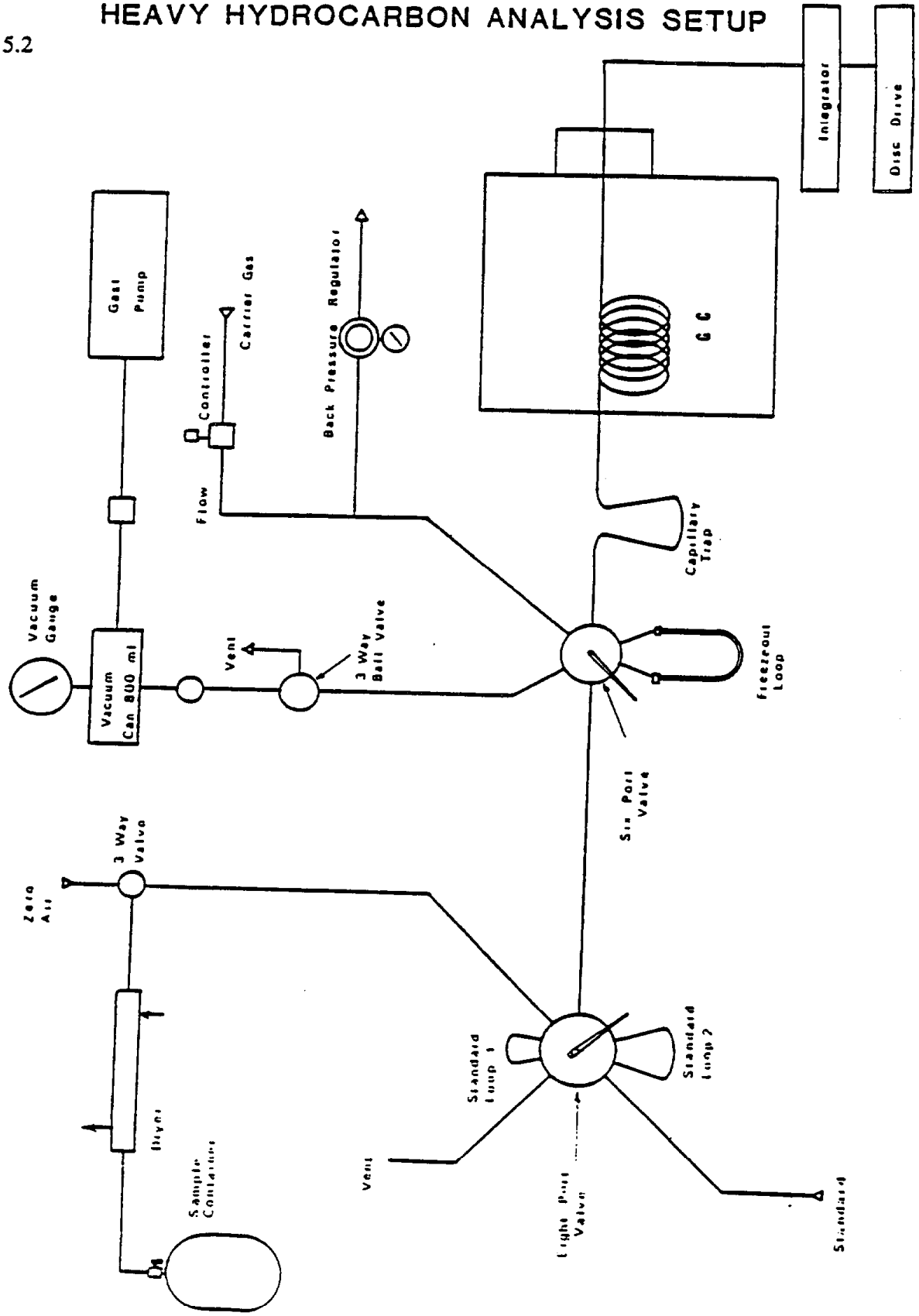

5.1.4 Compound Analysis and Identification

The GC/MS method (EPA Method TO-14) uses a cryotrapping system and a high resolution capillary column to analyze for volatile organic compounds.

A diagram of the analytical system, with an HP 5970 MSD for the detector, is shown in Figure 5.1.3 . A 100 to 1000 mL gaseous sample is introduced from the air sampling canister through a Nafion dryer to the freezeout loop. The freezeout loop is immersed in liquid oxygen and concentrates the air sample. After the sample is loaded, it is cryofocussed onto the beginning of a 30 meter fused silica capillary column. The cryofocused loop is then warmed and the compounds are separated and enter the mass spectrometer. The GC/MS has a complete data system capable of collecting, storing, and interpreting the data collected. The GC/MS is tuned and operated according to the specifications outlined in EPA SW 846 Test Methods. Compounds were calibrated by the external standard procedure using a NBS traceable Scott-Marrin air standards. The relative standard deviation of the method is 20% at 5 ppbv and the MDL is 0.5 ppbv for most compounds.

5.1.5 Permanent Gases (Nitrogen, Oxygen, Carbon Dioxide, Methane)

The permanent gases were analyzed by a SCAQMD method using a GC with a thermal conductivity detector and a FID on a Molecular Sieve 5A column a Poropak Q/N column mix. the system uses a 1 mL sample loop and is set-up with column backflush and bypassing to simultaneously measure the Carbon Dioxide and other fixed gases. The instrument is run isothermally at 70° C with helium carrier gas and has a detection limit of 0.05%. For low levels of Carbon Dioxide a catalyst is used to convert the Carbon Dioxide to Methane for analysis.

5.1.6 Aldehydes by the DNPH method

The C1 to C4 aldehydes were analyzed by a modification of EPA Method TO5. This method is based on the reaction of low molecular weight aldehydes and ketones with 2,4-dinitrophenylhydrazine to form stable derivatives. The source gases were sampled using midget impingers filled with acidified DNPH in acetonitrile. An aliquot of the impinger contents was analyzed using high performance liquid chromatography. The analytical column used was a Supelcosil LC18 reverse phase type, with a Supelco guard column. The system was run isocratically, using 70% methanol / 30% water as the eluant. The sample, typically 15 microliters, was injected with a Pressure-Lok syringe. The aldehydes were detected using a UV-visible detector operating at a wavelength of 360 nm, and quantified using an HP 3393A computing integrator.

5.2 Analytical Standard Operating Procedures

5.2.1 Methane Analysis

1. Standards

This procedure is used to load standards at high concentrations (5 ppmv) and have them diluted using calibrated loops to give GC responses equivalent to ambient concentrations. Dilution is 1/1000 with an uncertainty of less than 5%.

a. Set system to operating parameters given in Table 5.1.b.

b. Light FID, and place sample valve in load position.

FIGURE 5.1.3

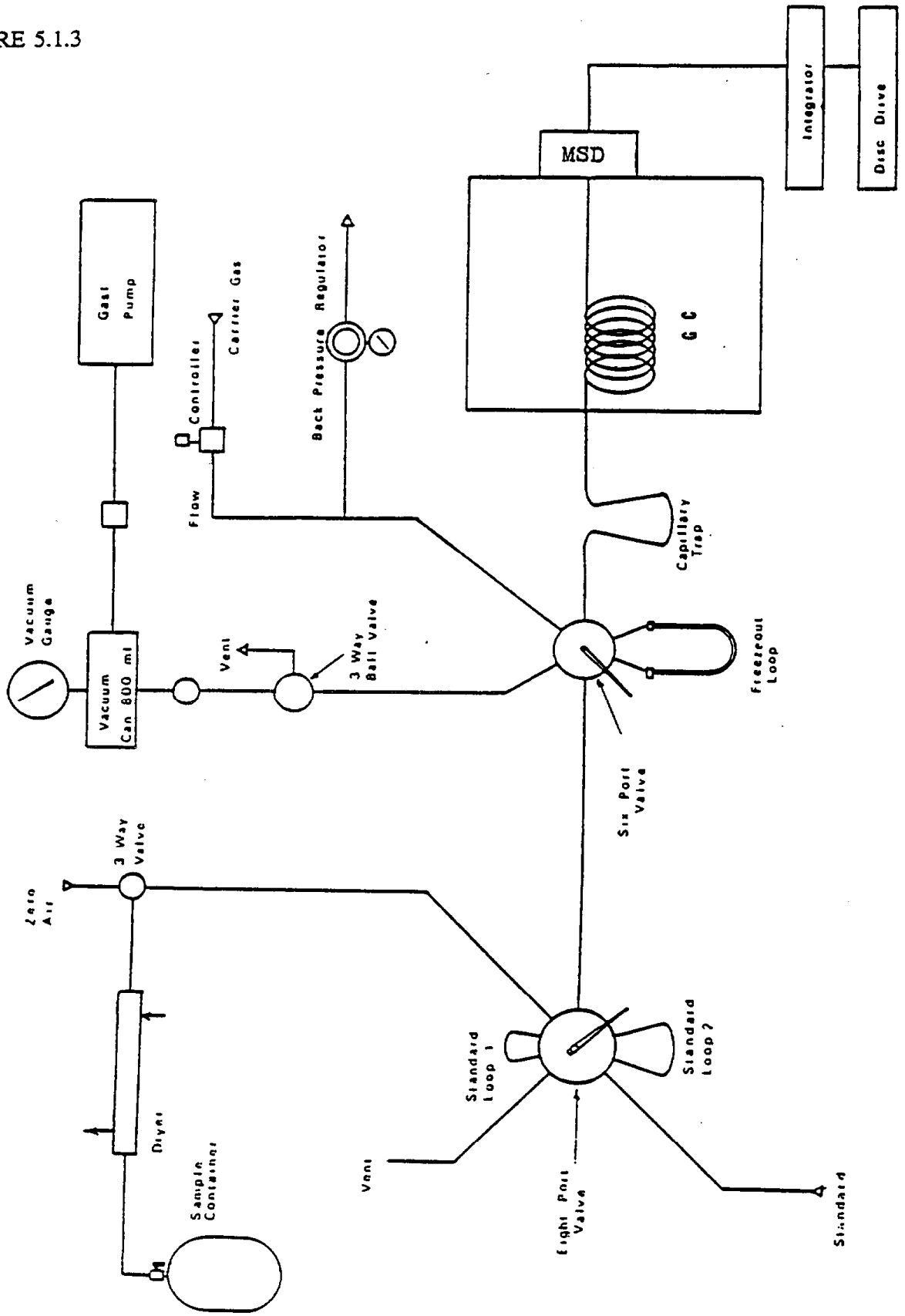
Integrator
Disc Drive
MSD
G C
Gast Pump
Controller
Carrier Gas
Back Pressure Regulator
Flow
Capillary Trap
Vacuum Gauge
Vacuum Can 800 ml
Vent
3 Way Ball Valve
Freezeout Loop
Six Port Valve
3 Way Valve
Zero Air
Standard Loop 1
Standard Loop 2
Dryer
Sample Container
Vent
Eight Port Valve
Standard

c. Connect standard cylinder to sampling line.

d. Open valve on standard cylinder and let bubble for 3 seconds to flush loop. Close valve.

e. Rotate sample valve to inject position, start integrator.

f. At end of run turn sample valve to load position.

g. Disconnect standard cylinder.

2. Ambient Air Samples

This procedure can be used to load low pressure samples in stainless steel sample canisters, and to load low pressure standards at simulated ambient concentrations.

a. Set system to operating parameters given in Table 5.1.b.

b. Light FID, turn sample valve to load position.

c. Connect sample canister to sampling line.

d. Open valve on sample canister, and let bubble for 3 seconds to flush loop. Close valve.

e. Turn sample valve to inject, and start integrator.

f. At the end of the run, turn sample valve to load.

g. Disconnect sample canister from sample intake line, record can pressure, place cap on sample canister, and place on table for light hydrocarbon analysis.

5.2.2 Light Hydrocarbon Analysis

This procedure is used to load standards at high concentrations (5 ppmv) and have them diluted using calibrated loops to give GC responses equivalent to ambient concentrations. Dilution is 1/1000 with an uncertainty of less than 5%.

a. Set system to operating parameters given in Table 6.1.b.

b. Light FID, turn on vacuum pump, turn on hot water, pour one Dewar of liquid oxygen, and place sample valve in the load position.

c. Open vacuum valve and evacuate volume measuring canister to 22.0".

d. Turn air sampling valve to zero air position.

e. Connect standard input line of 6 port standard valve to standard cylinder. Set regulator on standard cylinder to 10 psig. Open regulator valve.

f. Flush sample loop with zero air by opening intake valve and turning selector to vacuum. After a drop of 2" vacuum turn standard valve to load position. Turn selector to off and close intake valve. Re-evacuate volume measuring canister to 22".

g. Place freezeout loop in liquid oxygen Dewar.

h. Open valve on standard cylinder and let bubble for 3 seconds to flush loop. Close valve.

i. Rotate standard valve to inject position, turn selector to vacuum.

j. Let pressure rise until it reaches 10". This corresponds to a zero air volume of 500 mL.

k. Close intake valve first then turn selector to off. Close valve on sample can.

l. Turn sample valve to inject, remove liquid oxygen and immediately place freezeout loop in hot water bath and start integrator.

m. At end of run, turn sample valve to load position and remove hot water bath.

n. Turn regulator on standard cylinder off, and close regulator valve. Disconnect standard cylinder.

2. Ambient Air Samples

This procedure can be used to load low pressure samples in stainless steel sample canisters, and to load low pressure standards at simulated ambient concentrations.

a. Set system to operating parameters given in Table 5.1.b.

b. Light FID, turn on vacuum pump, turn on hot water, pour a Dewar of liquid oxygen, and place sample valve in the load position. Turn sampling line open to sample position.

c. Open vacuum valve and evacuate volume measuring canister to 22.0".

d. Connect sample canister to intake line.

e. Open intake valve and turn selector to vacuum and flush system and glass bead freezeout loop to 22" vacuum.

f. Close intake valve, and turn selector to off. Re-evacuate volume measuring canister to 22.0". Flush system with small amount of sample by opening selector valve and sample canister and re-evacuate volume measuring canister to 22.0".

g. Place freezeout loop in liquid oxygen Dewar.

h. Open valve on sample canister.

i. Turn selector to vacuum and open intake valve. Let pressure rise in volume measuring canister until it reaches 10". This corresponds to a sample size of 500 mL.

j. Close intake valve first then turn selector to off. Close valve on sample canister.

k. Turn sample valve to inject, remove liquid oxygen Dewar replace with hot water bath, and start integrator.

l. At end of run turn sample valve to inject position, and remove hot water bath.

m. Disconnect sample canister from sample intake line, record can pressure, place cap on sample canister, and place on table for heavy hydrocarbon analysis.

5.2.3 Heavy Hydrocarbon Analysis

1. Hydrocarbon Standards

This procedure is used to load standards at high concentrations (5 ppmv) and have them diluted using calibrated loops to give GC responses equivalent to ambient concentrations. Dilution is 1/1000 with an uncertainty of less than 5%.

a. Set system to operating parameters given in Table 5.1.b.

b. Light FID, turn on vacuum pump, turn on hot water, pour two Dewars of liquid oxygen, and place sample valve in the load position.

c. Open vacuum valve and evacuate volume measuring canister to 24.5".

d. Turn intake valve to "zero air" position.

e. Connect standard input line of 8 port standard valve to standard cylinder. Set regulator on standard cylinder to 10 psig. Open regulator valve.

f. Flush both sample loops with zero air by opening intake valve and turning selector to vacuum. After a drop of 2" vacuum turn standard valve to flush other loop. After an additional 2" vacuum drop turn selector to off and close intake valve. Leave standard valve in position for desired loop size. Re-evacuate volume measuring canister to 24.5".

g. Open valve on standard cylinder and let bubble for 3 seconds to flush loop. Close valve.

h. Place freezeout loop in liquid oxygen Dewar.

i. Rotate standard valve and turn selector to vacuum.

j. Let pressure rise until it reaches 14". This corresponds to a zero air volume of 500 mL.

k. Turn selector to off. Close valve on standard cylinder.

l. Place capillary loop in liquid oxygen Dewar.

m. Set timer for 2.5 min, and turn sample valve to inject.

n. Remove liquid oxygen and place freezeout loop in hot water bath. Start timer.

o. At 1.5 min set initial oven temperature to -20° C.

p. After 2.5 min and oven temperature of -20° C, turn sample valve to load position, start integrator, and simultaneously pull out capillary loop.

q. Remove hot water from freezeout loop.

r. Turn cryo valve off at 25° C. CLEAR. ENTER OFF.

s. Disconnect standard cylinder. Turn regulator on standard cylinder off, and close regulator valve.

2. Ambient Air Standards

This procedure can be used to load low pressure samples in stainless steel sample canisters, and to load low pressure standards at simulated ambient concentrations.

a. Set system to operating parameters given in Table 5.1.b.

b. Light FID, turn on vacuum pump, turn on hot water, pour two Dewars of liquid oxygen, and place sample valve in the load position.

c. Open vacuum valve and evacuate volume measuring canister to 24.0".

d. Turn intake valve to "sample" position.

e. Open intake valve and turn selector to vacuum and flush system and glass bead freezeout loop to 22" vacuum.

f. Close intake valve, and turn selector off. Re-evacuate volume measuring canister to 24.5".

g. Flush system with a small amount of sample by turning selector to vacuum, open sample canister and let pressure rise to 22". Close sample canister, and turn selector to off. Re-evacuate volume measuring canister to 24.5".

h. Place freezeout loop in liquid oxygen Dewar.

i. Open valve on sample canister.

j. Turn selector to vacuum and let pressure rise in volume measuring canister until it reaches 14". This corresponds to a sample size of 500 mL.

k. Turn selector to off. Close valve on sample canister.

l. Place capillary loop in liquid oxygen Dewar.

m. Set timer for 2.5 min, and turn sample valve to inject.

n. Remove liquid oxygen, place freezeout loop in hot water bath and simultaneously start timer.

o. At 1.5 min set initial oven temperature to -20° C.

p. After 2.5 min and oven temperature of -20° C, turn sample valve to load position, start integrator, and simultaneously pull our freezeout loop.

q. Remove hot water from freezeout loop.

r. Turn cryo valve off at 25° C. CLEAR. ENTER OFF.

s. Disconnect sample canister from sample intake line, record can pressure, place cap on sample canister, and place on temporary storage shelf.

5.2.4 Attachment 1 Compounds by GC/MS

1. Standards

This procedure is used to load standards at high concentrations (5 ppmv) and have them diluted using calibrated loops to give GC responses equivalent to ambient concentrations. Dilution is 1/500 with an uncertainty of less then 5%.

a. Set system to operating parameters.

b. Turn on vacuum pump, turn on hot water, and pour two Dewars of liquid oxygen, and place Sample Valve in the load position.

c. Open Vacuum Valve and evacuate Volume Measuring Canister to 24.5".

d. Turn Intake Valve to "aero air" position.

e. Connect Standard Input Line of 8 port Standard Valve to standard cylinder. Set regulator on standard cylinder to 10 psig. Open regulator valve.

f. Flush both sample loops with zero air by opening Intake Valve and turning Selector to vacuum. After a drop of 2" vacuum turn standard valve to flush other loop. After an additional 2" vacuum drop turn Selector to off and close Intake Valve. Leave Standard Valve in position for desired loop size. Re-evacuate Volume Measuring Canister to 24.5".

g. Open valve on standard cylinder and let bubble for 3 seconds to flush loop. Close valve.

h. Place freezeout loop in liquid oxygen Dewar.

i. Rotate Standard Valve and turn Selector to vacuum.

j. Let pressure rise until it reaches 14". This corresponds to a zero air volume of 500 mL.

k. Turn Selector to off. Close valve on standard cylinder.

l. Place capillary loop in liquid oxygen Dewar.

m. Set timer for 2.5 min, and turn Sample Valve to inject.

n. Remove Liquid Oxygen and place freezeout loop in hot water bath. Start timer.

o. On GC/MS computer enter the data acquisition program and set up data collection file for standard. Standard files are formatted as: S (Days Date) (Last digit of year) A (Run Number). D Turn on cryo option, and enter the Prepare To Inject Program.

p. After 2.5 min and oven temperature of -20° C, turn Sample Valve to load position, hit the GO softkey on the computer, and simultaneously pull out capillary loop.

q. Remove hot water from Freezeout loop.

r. Turn cryo valve off at 25° C. CLEAR. ENTER OFF.

s. Disconnect standard cylinder. Turn regulator on standard cylinder off, and close regulator valve.

2. Ambient Air Standards

This procedure can be used to load low pressure samples in stainless steel sample containers, and to load low pressure standards at simulated ambient concentrations.

a. Set system to operating parameters given in Table 1.

b. Open Vacuum Valve and evacuate Volume Measuring Canister to 24.0".

c. Turn Intake Valve to "sample" position.

d. Open Intake Valve and turn Selector to vacuum and flush system and glass bead Freezeout Loop at 22" vacuum.

e. Close Intake Valve, and turn selector to off. Re-evacuate Volume Measuring Canister to 24.5".

f. Flush system with a small amount of sample by turning Selector to vacuum, open Sample Canister and let pressure rise to 22". Close Sample Canister, and turn Selector to off. Re-evacuate Volume Measuring Canister to 24.5".

g. Place Freezeout Loop in liquid oxygen Dewar.

h. Open valve on Sample Canister.

i. Turn Selector to vacuum and let pressure rise in Volume Measuring Canister until it reaches 14". This corresponds to a sample size of 500 mL.

j. Turn Selector to off. Close valve on Sample Canister.

k. Place Capillary Loop in liquid oxygen Dewar.

l. Set timer for 2.5 min, and turn Sample Valve to inject.

m. Remove liquid oxygen, place Freezeout Loop in hot water bath and simultaneously start timer.

n. On GC/MS computer enter the data acquisition program and set up data collect ion file for standard. Standard files are formatted as: S(Days Date)(Last digit of year)A(Run Number).D Turn on cryo option, and enter the Prepare To Inject Program.

o. After 2.5 min and oven temperature of -20´C, turn Sample Valve to load position, hit the GO softkey on the computer, and simultaneously pull out capillary loop. Min set initial oven temperature to-20° C.

p. Remove hot water from Freezeout Loop.

q. Turn cryo valve off at 25° C. CLEAR. ENTER OFF.

r. Disconnect Sample Canister from Sample Intake Line, record can pressure, place cap on Sample Canister, and place on temporary storage shelf.

5.2.5 Permanent Gases

1. Standards

a. Set system to operating parameters.

b. Light FID, turn on TCD, and place sample valve in load position.

c. Connect standard cylinder to sampling line.

d. Open valve on standard cylinder and let bubble for 3 seconds to flush loop. Close valve.

e. Rotate sample valve to inject position, start integrator.

f. Turn second column valve to out position at 1.6 min.

g. Turn second column valve to in position at 8.0 min.

h. At end of run turn sample valve to load position.

i. Disconnect standard cylinder.

2. Ambient Air Samples

This procedure can be used to load low pressure samples in stainless steel sample canisters, and to load low pressure standards at simulated ambient concentrations.

a. Set system to operating parameters.

b. Light FID, turn on TCD, and turn sample valve to load position.

c. Connect sample canister to sampling line.

d. Open valve on sample canister, and let bubble for 3 seconds to flush loop. Close valve.

e. Turn sample valve to inject, and start integrator.

f. Turn second column valve to out position at 1.6 min.

g. Turn second column valve to in position at 8.0 min.

h. At the end of the run, turn sample valve to load.

i. Disconnect sample canister from sample intake line, record can pressure, place cap on sample canister, and place on table for light hydrocarbon analysis.

5.3 Calibration Standards

There are two types of calibrations performed for the hydrocarbon analysis. One is for the amount of the various hydrocarbons present and the second is for the identification of the retention times of the different hydrocarbons species.

5.3.1 Quantitative Standards

The concentrations of the individual hydrocarbons were determined by their uniform carbon response on the FID. This procedure is the recommended calibration Ðprocedure and has been shown to be accurate to 5 to 8% (Lonneman, 1979). The primary calibration standard used for the light and heavy hydrocarbons is a NBS traceable reference gas standard obtained from Scott-Marrin, Riverside, CA. The specifications of the standard are shown in Figure 5.3.1.(a) the light hydrocarbon fraction is calibrated against propane and the non-aromatic fraction of the heavy hydrocarbons are calibrated against hexane. The aromatic hydrocarbons are calibrated against benzene. The standard cylinder is returned every year for recalibration by the manufacturer. The concentrations of the hydrocarbons in the standard are converted to parts per billion carbon (ppbC) using the procedure described by Westbert et. al. (1984).

The concentrations of the individual compounds are determined by using an External Calibration procedure, in which the compound's response is compared to the response of a standard. The primary calibration standard is an NIST traceable reference gas standard obtained from Scott-Marrin, Inc., Riverside,CA. The specifications of the standard are shown in Figure B.5.3.1(b) & (c) The standard cylinder is returned every six months for recalibration by the manufacturer. In addition, a standard containing toluene, o-xylene, ethene and propene is used to verify response for these compounds.

Standards for aldehyde determinations were prepared as described in ARB Method 110.

Intercomparison of the light and heavy hydrocarbon runs can be made using both the propane peak and the hexane peak. The propane peak can be used because the heavy loaded column is capable of separating the lighter hydrocarbons.

5.3.2 Qualitative Calibration

The retention times were calibrated against commercial gas standard blends of different hydrocarbons and from laboratory standards prepared from neat materials.

The commercial gas blends are available from Ideal Gas Products and Scott Specialty Gases. These standards are used to establish retention times and to check concentrations obtained from the NBS traceable standard.

Laboratory standards are prepared from pure materials for those compounds not available in gas blends. Known quantities of the pure materials are diluted with a measured volume of "zero air". Dilutions are made in stainless steel canisters and are stable for use in retention time calibrations for several months.

FIGURE 5.5.1 (a)

SCOTT-MARRIN, INC.
2001 THIRD ST. • UNIT H • RIVERSIDE, CA 92507
TELEPHONE (714) 784-1240

REPORT OF ANALYSIS

DATE: 23 October 1986

TO: Steve Hoyt
Environmental Analytical Science
3576 Empleo St., Suite 5
San Luis Obispo, CA 93401

CUSTOMER ORDER NUMBER: 1171

CYLINDER NUMBER CC121

COMPONENT	CONCENTRATION(v/v)
Propane	4.71 ± 0.05 ppm
n-Hexane	5.12 ± 0.1 ppm
Benzene	5.01 ± 0.1 ppm
Nitrogen	Balance

CYLINDER NUMBER _____

COMPONENT	CONCENTRATION(v/v)

CYLINDER NUMBER _____

COMPONENT	CONCENTRATION(v/v)

CYLINDER NUMBER _____

COMPONENT	CONCENTRATION(v/v

ANALYST M. C. Dodd

APPROVED J.T. Marrin

The only liability of this company for gas which fails to comply with this analysis shall be replacement or reanalysis thereof by the company without extra cost.

76

FIGURE 5.3.1.(a2)

SCOTT-MARRIN, INC.
2001 THIRD ST. • UNIT H • RIVERSIDE, CA 92507
TELEPHONE (714) 784-1240

REPORT OF ANALYSIS

TO:

Steve Hoyt
Environmental Analytical Services
3576 Empleo, Suite #5
San Luis Obispo, CA 93401

DATE: 5 November 1987

CUSTOMER ORDER NUMBER: 1253

CYLINDER NUMBER CC62416

COMPONENT	CONCENTRATION(v/v)
inyl Chloride	5.14 ± 0.1 ppm
i lloromethane	5.25 ± 0.1 ppm
ri chloromethane	0.515 ± 0.01 ppm
,2-Dichloroethane	5.20 ± 0.1 ppm
, 1-Trichloroethane	0.520 ± 0.01 ppm
etrachloromethane	0.525 ± 0.01 ppm
r hloroethylene	0.530 ± 0.01 ppm
enzene	5.25 ± 0.1 ppm
,2-Dibromoethane	5.29 ± 0.1 ppm
e achlorcethylene	0.530 ± 0.01 ppm
itrogen	Balance

ANALYST M. Dodd

APPROVED J. T. Marrin

The only liability of this company for gas which fails to co alysis shall be replacement or reanalysis thereof by the company without extra cost.

FIGURE 5.3.1 (a3)

SCOTT-MARRIN, INC.
2001 THIRD ST. • UNIT H • RIVERSIDE, CA 92507
TELEPHONE (714) 784-1240

REPORT OF ANALYSIS

TO:

Steve Hoyt
Environmental Analytical Services
3576 Empleo Street, Ste. 5
San Luis Obispo, CA 93401

DATE: 12 September 1988

CUSTOMER ORDER NUMBER: 1367

CYLINDER NUMBER CC68692

COMPONENT	CONCENTRATION(v/v)
Halocarbon-12	5.20 ± 0.1 ppm
Halocarbon-11	4.40 ± 0.1 ppm
1,1-Dichloroethylene	4.87 ± 0.1 ppm
1,1-Dichloroethane	5.05 ± 0.1 ppm
1,1,2-Trichloroethane	5.20 ± 0.1 ppm
Nitrogen	Balance

ANALYST J. W. Gay

APPROVED J. T. Marrin

The only liability of this company for gas which fails to co analysis shall be replacement or reanalysis thereof by the company without extra cost.

5.4 Calibration Procedures

5.4.1 Methane

The methane analyzer was calibrated by passing the methane standard through a 1.0 mL calibrated sample loop. The standard was then injected onto the column according to the standard operating procedures. The concentration of the methane is determined using the following formula.

Methane (ppmC) = Standard Conc. (ppmv) * 1 * (Sample Area/Standard Area)

The factor of one accounts for the one carbon atom in methane.

5.4.2 Hydrocarbons

The light and heavy hydrocarbons were calibrated by using a dilution of the 5 ppm NBS traceable standard. A summary of the calibration procedures is shown in Table 5.4.2. The daily calibration consists of a zero point and two calibration points (10% and 100% of range). One calibration point is run at the beginning of the dat and one at the end of the day. Weekly, a three point calibration is run to verify the linearity of the instrument. During the monthly internal audit of the analytical system a 5 point calibration curve is run to establish performance criteria for the system.

Standards were prepared using a gas dilution system on the gas chromatograph or by making static dilutions to atmospheric levels. The gas dilution system is constructed from an 8 port gas sampling valve with a 0.05 mL, 0.5 mL, and 5.0 sample loops. The loops are filled with the standard and flushed with "zero air" prepared with an AADCO Model 737 pure air generator. The three loop sizes are used to prepare a three point calibration of the system to check the linearity in the concentration range of interest. The gas dilution system is used for the daily instrument calibration. The concentration of the individual hydrocarbons is determined using the following formula:

Hydrocarbon (ppbC) = Standard Conc. (ppbv) * number of carbons * (Sample Area/Standard Area)

Standards at atmospheric concentration levels were prepared by diluting the NBS traceable standard in stainless steel canisters. The standards are diluted by using a calibrated syringe to inject a measured volume of NBS traceable standard into a passivated stainless steel canister. The canister is filled with a known volume of zero air measured using a mass flow meter. The diluted standards are run in exactly the same manner as the samples and serve as a check of the sample concentration and injection system.

5.4.3 GC/MS Compounds

The GC/MS Compounds were calibrated using a dilution of the NBS traceable standard. The daily calibration consists of a zero point and two calibration points (10% and 100% of range). One calibration point is run at the beginning of the day and one at the end of the day. Weekly, a three point calibration is run to verify the linearity of the instrument. During the monthly internal audit of the analytical system a 5 point calibration curve is run to establish performance criteria for the system.

Standards were by using a gas dilution system on the gas chromatograph or by making static dilutions to atmospheric levels. The gas dilution system is constructed from an 8 port gas sampling valve with a 0.05 mL, 0.5 mL, and 5.0 sample loops. The loops are filled with the standard and flushed with "zero air" prepared with an AADCO Model 737 pure air generator. The three loop sizes are used to prepare a three point calibration of the system to check the linearity in the concentration range of interest. The gas dilution system is used for the daily instrument calibration.

The concentration of the individual hydrocarbons is determined using the following formula:

Compound (ppbv) = Std. Conc. (ppbv) * (Sample Area/Std. Area) * (Std. Volume/Sample Volume)

Standards at atmospheric concentration levels were prepared by diluting the NBS traceable standard in stainless steel canisters. The standards were diluted using a calibrated syringe to inject a measured volume of the NBS traceable standard into a passivated stainless steel canister. The canister is filled with a known volume of zero air measured using a mass flow meter. This ambient level standard is sent to another laboratory for calibration against the NBS 5 ppbv VOC standard. The diluted standard is run in exactly the same manner as the samples and serves as a check of the sample concentration injection system.