Data Summaries Follow

Table 7 - Kern River Summary Hydrocarbon Species by % Mass

| | OF-01 | OF-02 | OF-03 | OF-04 | OF-05 | OF-06 |
|---|---|---|---|---|---|---|
| Methane | 0.1616 | 81.3998 | 62.0949 | 60.7789 | 95.9289 | 4.4862 |
| Ethane | 0.0931 | 0.1565 | 0.1214 | 1.3946 | 0.2717 | 0.4191 |
| Propane | 0.1499 | 0.0955 | 0.0781 | 0.3922 | 0.0716 | 0.3025 |
| i-Butane | 0.0000 | 0.0647 | 0.0531 | 0.1601 | 0.0542 | 0.3003 |
| n-Butane | 0.1825 | 0.0842 | 0.0684 | 0.0914 | 0.0352 | 0.2139 |
| 2,2-dimethylpropane | 0.0000 | 0.3083 | 0.2510 | 0.6376 | 0.1440 | 0.3897 |
| i-Pentane | 0.0000 | 0.1803 | 0.1558 | 0.1549 | 0.0434 | 0.4758 |
| n-Pentane | 0.0000 | 0.0321 | 0.0250 | 0.0234 | 0.0066 | 0.0696 |
| 2,2-Dimethylbutane | 0.5323 | 0.3794 | 0.3487 | 0.2715 | 0.0599 | 0.9194 |
| Cyclopentane | 0.0000 | 0.0000 | 0.0000 | 0.0000 | 0.1704 | 0.0000 |
| 2,3-Dimethylbutane | 0.3055 | 1.3302 | 1.2881 | 0.8293 | 0.0000 | 2.9941 |
| 2-Methylpentane | 0.0000 | 0.0203 | 0.0174 | 0.0025 | 0.0000 | 0.0637 |
| 3-Methylpentane | 0.0000 | 0.0737 | 0.0712 | 0.0696 | 0.0093 | 0.2005 |
| n-Hexane | 0.0724 | 0.0194 | 0.0082 | 0.3656 | 0.0000 | 0.0370 |
| Methylcyclopentane | 0.0000 | 0.0121 | 0.1412 | 0.0153 | 0.0000 | 0.3065 |
| 2,4-Dimethylpentane | 0.0931 | 0.2317 | 0.2654 | 0.1847 | 0.0341 | 0.6060 |
| Benzene | 0.1318 | 0.0137 | 0.0000 | 0.2571 | 0.0000 | 0.0177 |
| Cyclohexane | 0.0000 | 0.1322 | 0.1564 | 0.1040 | 0.0000 | 0.3697 |
| 2-Methylhexane | 0.2952 | 0.6399 | 0.7923 | 0.4250 | 0.0902 | 0.0281 |
| 2,3-Dimethylpentane | 0.0000 | 0.0000 | 0.0000 | 0.0338 | 0.0088 | 2.0899 |
| 3-Methylhexane | 0.0000 | 0.0223 | 0.0228 | 0.0332 | 0.0000 | 0.0844 |
| n-Heptane | 0.0000 | 0.0000 | 0.0000 | 0.0000 | 0.0000 | 0.0000 |
| Methylcyclohexane | 0.0000 | 0.0158 | 0.0169 | 0.0162 | 0.0000 | 0.1434 |
| 2,4-Dimethylhexane | 0.1649 | 0.1780 | 0.2580 | 0.1924 | 0.0000 | 0.6607 |
| 2,3,4-Trimethylpentane | 0.2291 | 0.1985 | 0.2951 | 0.2434 | 0.0341 | 0.6631 |
| Toluene | 0.1059 | 0.0800 | 0.1192 | 0.1048 | 0.0141 | 0.2593 |
| 2,3-Dimethylhexane | 0.0000 | 0.0466 | 0.0566 | 0.1007 | 0.0170 | 0.1882 |
| 2-Methylheptane | 0.0000 | 0.0298 | 0.0513 | 0.0196 | 0.0115 | 0.0592 |
| 3-Ethylhexane | 0.1587 | 0.1108 | 0.1775 | 0.9907 | 0.0154 | 0.5925 |
| n-Octane | 1.6531 | 0.8900 | 1.4281 | 1.1606 | 0.0000 | 1.2543 |
| Ethylbenzene | 1.4534 | 0.4798 | 0.7963 | 0.6379 | 0.1166 | 0.4558 |
| p-Xylene | 0.0384 | 0.0155 | 0.0250 | 0.0187 | 0.0000 | 0.1605 |
| m-Xylene | 0.0573 | 0.0091 | 0.0096 | 0.0393 | 0.0000 | 0.0462 |
| o-Xylene | 0.5676 | 0.1397 | 0.2040 | 0.2463 | 0.0432 | 0.8641 |
| n-Nonane | 0.5269 | 0.0804 | 0.1463 | 0.0154 | 0.0000 | 0.7433 |
| i-Propylbenzene | 0.3997 | 0.0751 | 0.1261 | 0.0649 | 0.0157 | 0.2696 |
| n-Propylbenzene | 0.5226 | 0.0704 | 0.1432 | 0.2459 | 0.0000 | 0.5119 |
| 3-Ethyltoluene | 0.6157 | 0.0754 | 0.0701 | 0.3010 | 0.0459 | 0.2927 |
| 1,3,5-Trimethylbenzene | 1.1485 | 0.1059 | 0.2325 | 0.3917 | 0.0460 | 0.6053 |
| 2-Ethyltoluene | 1.0170 | 0.1053 | 0.2072 | 0.4058 | 0.0187 | 0.6919 |
| t-butylbenzene | 1.4128 | 0.1515 | 0.2642 | 0.2284 | 0.0781 | 0.6499 |
| 1,2,4-Trimethylbenzene | 1.8178 | 0.1777 | 0.3203 | 0.0673 | 0.0000 | 0.1576 |
| i-butylbenzene | 0.6893 | 0.0000 | 0.0000 | 0.4387 | 0.0000 | 0.0000 |
| s-butylbenzene | 1.5427 | 0.1154 | 0.2455 | 0.0827 | 0.0000 | 0.4963 |
| n-Decane | 0.9377 | 0.0767 | 0.1528 | 0.0000 | 0.0255 | 0.3824 |
| 1,2,3-Trimethylbenzene | 1.2611 | 0.1167 | 0.2233 | 0.3045 | 0.0485 | 0.5393 |
| 1,3-Diethylbenzene | 1.5037 | 0.0883 | 0.2133 | 0.3182 | 0.0000 | 0.3418 |
| 1,4-Diethylbenzene | 1.2994 | 0.0874 | 0.2261 | 0.2255 | 0.0212 | 0.3497 |
| n-butylbenzene | 1.0621 | 0.0273 | 0.1696 | 0.0000 | 0.0000 | 0.1890 |
| 1,2-diethylbenzene | 0.9061 | 0.0729 | 0.1544 | 0.2284 | 0.0121 | 0.4960 |
| n-undecane | 0.0000 | 0.0000 | 0.1151 | 0.0000 | 0.0000 | 0.0089 |
| Other C4 | 0.0000 | 0.0000 | 0.0000 | 0.1460 | 0.0000 | 0.0000 |
| Other C5 | 0.0000 | 0.0000 | 0.0000 | 0.0566 | 0.0000 | 0.0000 |
| Other C6 | 0.0000 | 0.6617 | 0.7074 | 0.6329 | 0.0000 | 3.0064 |
| Other C7 | 2.7537 | 2.7837 | 4.5832 | 2.6022 | 0.4848 | 21.5246 |
| Other C8 | 9.6620 | 3.1244 | 5.1639 | 5.9405 | 0.7901 | 22.4750 |
| Other C9 | 24.3261 | 2.7101 | 5.6391 | 10.3142 | 0.8362 | 19.7780 |
| Other C10 | 30.0711 | 1.8284 | 6.0923 | 6.6704 | 0.3693 | 6.7337 |
| Other C11 | 10.0782 | 0.0751 | 5.4074 | 0.3234 | 0.0275 | 0.0353 |

Table 8 - Elk Hills Summary Hydrocarbon Species by % Mass

| | OF-10 | OF-11 | OF-12 | OF-13 | OF-14 | OF-15 | OF-16 | OF-17 |
|---|---|---|---|---|---|---|---|---|
| Methane | 44.8895 | 37.7408 | 33.4312 | 11.8005 | 31.9680 | 19.4226 | 35.1586 | 26.7810 |
| Ethane | 7.9019 | 7.6800 | 12.7717 | 9.5479 | 15.4250 | 8.4997 | 3.7104 | 7.5402 |
| Propane | 13.0885 | 14.8836 | 17.2663 | 17.0718 | 17.7471 | 15.3786 | 12.6201 | 14.1825 |
| i-Butane | 3.1748 | 3.3993 | 3.4171 | 5.7194 | 3.8778 | 4.2802 | 3.2037 | 5.0340 |
| n-Butane | 10.3318 | 6.7414 | 10.8072 | 17.3072 | 11.4358 | 3.3683 | 15.2084 | 13.2046 |
| 2,2-dimethylpropane | 0.1106 | 0.1170 | 0.1195 | 0.0427 | 0.1169 | 0.6509 | 0.1633 | 0.0420 |
| i-Pentane | 2.8767 | 1.5246 | 3.3797 | 2.0964 | 3.6524 | 1.6843 | 1.8193 | 4.4784 |
| n-Pentane | 2.7182 | 1.4220 | 3.3991 | 3.2146 | 3.4792 | 1.5078 | 3.5079 | 3.0220 |
| 2,2-Dimethylbutane | 0.1824 | 0.1976 | 0.1976 | 0.0925 | 0.1790 | 0.0966 | 0.3145 | 0.0877 |
| Cyclopentane | 0.4262 | 0.4740 | 0.4656 | 0.2939 | 0.4103 | 0.1599 | 0.7297 | 0.2727 |
| 2,3-Dimethylbutane | 0.0000 | 0.0000 | 0.0000 | 0.0000 | 0.0000 | 0.0000 | 0.0000 | 0.0000 |
| 2-Methylpentane | 1.0121 | 1.1492 | 0.9909 | 1.7049 | 0.9906 | 1.0162 | 0.5465 | 1.2021 |
| 3-Methylpentane | 0.6783 | 0.7795 | 0.6824 | 1.6037 | 0.1099 | 0.0000 | 0.4636 | 1.4428 |
| n-Hexane | 1.0797 | 1.2686 | 1.0330 | 3.2012 | 0.9704 | 2.4788 | 0.8823 | 2.3533 |
| Methylcyclopentane | 1.5561 | 1.9090 | 1.7244 | 2.7693 | 1.5368 | 1.4020 | 3.0811 | 2.4687 |
| 2,4-Dimethylpentane | 0.0000 | 0.1213 | 0.1125 | 0.0910 | 0.0928 | 0.0923 | 0.1934 | 0.0791 |
| Benzene | 0.0799 | 0.0912 | 0.0694 | 0.4320 | 0.0674 | 0.4661 | 0.0287 | 0.2989 |
| Cyclohexane | 0.0255 | 0.0307 | 0.0293 | 0.0000 | 0.0237 | 0.0177 | 0.0486 | 0.0164 |
| 2-Methylhexane | 0.2065 | 0.2603 | 0.2276 | 0.4923 | 0.1838 | 0.4907 | 0.1631 | 0.3990 |
| 2,3-Dimethylpentane | 0.2107 | 0.2603 | 0.2397 | 0.2208 | 0.1905 | 0.2270 | 0.4335 | 0.1875 |
| 3-Methylhexane | 0.2814 | 0.3573 | 0.2411 | 0.6209 | 0.2522 | 0.0000 | 0.3197 | 0.5050 |
| n-Heptane | 0.3279 | 0.4367 | 0.3039 | 1.0452 | 0.2691 | 1.0439 | 0.1562 | 0.7316 |
| Methylcyclohexane | 0.8685 | 1.1612 | 1.0033 | 1.3402 | 0.7933 | 1.3160 | 2.2377 | 1.1241 |
| 2,4-Dimethylhexane | 0.1520 | 0.0000 | 0.0000 | 0.0000 | 0.0000 | 0.0000 | 0.0851 | 0.1298 |
| 2,3,4-Trimethylpentane | 0.3075 | 0.0000 | 0.3843 | 0.0000 | 0.0343 | 0.0163 | 0.0302 | 0.0124 |
| Toluene | 0.1012 | 0.1382 | 0.0864 | 0.4755 | 0.0771 | 0.4887 | 0.0738 | 0.2453 |
| 2,3-Dimethylhexane | 0.0000 | 0.0323 | 0.0273 | 0.0257 | 0.0000 | 0.0277 | 0.0548 | 0.0197 |
| 2-Methylheptane | 0.0924 | 0.1416 | 0.0945 | 0.0000 | 0.0185 | 0.0000 | 0.0000 | 0.1889 |
| 3-Ethylhexane | 0.0000 | 0.0825 | 0.0333 | 0.0000 | 0.0438 | 0.1267 | 0.0372 | 0.0000 |
| n-Octane | 0.1923 | 0.3093 | 0.2305 | 0.2394 | 0.1645 | 0.2901 | 0.3371 | 0.1331 |
| Ethylbenzene | 0.0741 | 0.1219 | 0.0938 | 0.0619 | 0.0506 | 0.0976 | 0.2080 | 0.0386 |
| p-Xylene | 0.0195 | 0.0545 | 0.0310 | 0.0306 | 0.0207 | 0.0520 | 0.0467 | 0.0208 |
| m-Xylene | 0.0311 | 0.0333 | 0.0210 | 0.1080 | 0.0302 | 0.1659 | 0.0572 | 0.0462 |
| o-Xylene | 0.0221 | 0.0378 | 0.0258 | 0.0325 | 0.0183 | 0.0545 | 0.0504 | 0.0160 |
| n-Nonane | 0.0260 | 0.0241 | 0.0186 | 0.0471 | 0.0281 | 0.0931 | 0.0408 | 0.0210 |
| i-Propylbenzene | 0.0078 | 0.0000 | 0.0034 | 0.0000 | 0.0045 | 0.0071 | 0.0000 | 0.0000 |
| n-Propylbenzene | 0.0190 | 0.0138 | 0.0110 | 0.0000 | 0.0125 | 0.0177 | 0.0000 | 0.0000 |
| 3-Ethyltoluene | 0.0169 | 0.0107 | 0.0093 | 0.0000 | 0.0050 | 0.0000 | 0.0000 | 0.0000 |
| 1,3,5-Trimethylbenzene | 0.0137 | 0.0000 | 0.0000 | 0.0000 | 0.0092 | 0.0000 | 0.0000 | 0.0000 |
| 2-Ethyltoluene | 0.0000 | 0.0097 | 0.0087 | 0.0000 | 0.0066 | 0.0000 | 0.0000 | 0.0000 |
| t-butylbenzene | 0.0000 | 0.0115 | 0.0101 | 0.0000 | 0.0000 | 0.0000 | 0.0000 | 0.0000 |
| 1,2,4-Trimethylbenzene | 0.0350 | 0.0000 | 0.0055 | 0.0000 | 0.0000 | 0.0381 | 0.0000 | 0.0000 |
| i-butylbenzene | 0.0000 | 0.0000 | 0.0049 | 0.0000 | 0.0000 | 0.0000 | 0.0000 | 0.0000 |
| s-butylbenzene | 0.0000 | 0.0072 | 0.0000 | 0.0000 | 0.0000 | 0.0000 | 0.0000 | 0.0000 |
| n-Decane | 0.0075 | 0.0094 | 0.0064 | 0.0000 | 0.0041 | 0.0194 | 0.0451 | 0.0000 |
| 1,2,3-Trimethylbenzene | 0.0289 | 0.0000 | 0.0000 | 0.0000 | 0.0000 | 0.0000 | 0.0000 | 0.0000 |
| 1,3-Diethylbenzene | 0.0000 | 0.0000 | 0.0000 | 0.0000 | 0.0000 | 0.0000 | 0.0000 | 0.0000 |
| 1,4-Diethylbenzene | 0.0000 | 0.0000 | 0.0000 | 0.0000 | 0.0000 | 0.0000 | 0.0000 | 0.0000 |
| n-butylbenzene | 0.0000 | 0.0000 | 0.0000 | 0.0000 | 0.0000 | 0.0000 | 0.0000 | 0.0000 |
| 1,2-diethylbenzene | 0.0000 | 0.0000 | 0.0000 | 0.0000 | 0.0000 | 0.0380 | 0.0000 | 0.0000 |
| n-undecane | 0.0065 | 0.0000 | 0.0000 | 0.0000 | 0.0092 | 0.0000 | 0.0000 | 0.0000 |
| Other C4 | 0.5783 | 6.1069 | 0.0000 | 5.2441 | 0.0577 | 13.7463 | 0.0000 | 2.5913 |
| Other C5 | 1.4612 | 3.0812 | 0.7107 | 6.5695 | 1.3404 | 9.1198 | 1.2993 | 6.2761 |
| Other C6 | 2.2153 | 3.3493 | 3.1000 | 3.6424 | 1.9094 | 6.4305 | 6.2250 | 3.0361 |
| Other C7 | 1.3296 | 2.3796 | 1.5896 | 2.0599 | 1.3557 | 4.3198 | 3.7814 | 1.2699 |
| Other C8 | 0.7813 | 1.3165 | 1.0459 | 0.6321 | 0.6379 | 0.9180 | 1.9979 | 0.4258 |
| Other C9 | 0.3196 | 0.6090 | 0.4462 | 0.1228 | 0.2824 | 0.3332 | 0.6220 | 0.0753 |
| Other C10 | 0.1121 | 0.1073 | 0.0851 | 0.0000 | 0.0975 | 0.0000 | 0.0177 | 0.0000 |
| Other C11 | 0.0219 | 0.0068 | 0.0040 | 0.0000 | 0.0098 | 0.0000 | 0.0000 | 0.0000 |

Table 9 - Belridge Summary Hydrocarbon Species by % Mass

| | OF-20 | OF-21 | OF-22 | OF-23 | OF-24 | OF-25 | OF-26 | OF-27 |
|---|---|---|---|---|---|---|---|---|
| Methane | 0.6309 | 47.8262 | 44.8636 | 45.7334 | 25.6069 | 2.7544 | 95.9626 | 98.1996 |
| Ethane | 13.8534 | 10.1622 | 6.8113 | 9.2589 | 7.9440 | 5.4703 | 0.5781 | 0.6958 |
| Propane | 20.3860 | 13.5873 | 10.3987 | 13.3879 | 16.7611 | 4.5376 | 0.1836 | 0.1861 |
| i-Butane | 1.9291 | 2.7121 | 2.5031 | 3.0755 | 4.2843 | 2.1106 | 0.0375 | 0.0213 |
| n-Butane | 17.5464 | 7.7710 | 8.2760 | 9.7694 | 14.0011 | 6.6176 | 0.1228 | 0.0335 |
| 2,2-dimethylpropane | 0.0456 | 0.0203 | 0.0185 | 0.0251 | 0.0415 | 0.2065 | 0.0794 | 0.0554 |
| i-Pentane | 5.9460 | 2.9425 | 3.5109 | 3.7319 | 5.0878 | 5.3812 | 0.0535 | 0.0080 |
| n-Pentane | 8.3204 | 3.3931 | 3.9112 | 3.8510 | 5.6848 | 4.3558 | 0.0456 | 0.0079 |
| 2,2-Dimethylbutane | 0.0964 | 0.0438 | 0.0407 | 0.0409 | 0.0828 | 0.2502 | 0.0000 | 0.0050 |
| Cyclopentane | 0.0000 | 0.0000 | 0.1801 | 0.1537 | 0.2917 | 0.6577 | 0.0000 | 0.0000 |
| 2,3-Dimethylbutane | 0.3293 | 0.1474 | 0.0000 | 0.0000 | 0.0000 | 0.0000 | 0.0191 | 0.0011 |
| 2-Methylpentane | 1.7627 | 1.0353 | 1.3757 | 1.1674 | 1.0834 | 2.1277 | 0.0223 | 0.0031 |
| 3-Methylpentane | 1.6061 | 0.6445 | 0.9477 | 0.7538 | 1.0913 | 1.4123 | 0.0000 | 0.0000 |
| n-Hexane | 3.0647 | 1.1569 | 1.5742 | 1.1753 | 1.9673 | 2.3156 | 0.0206 | 0.0038 |
| Methylcyclopentane | 3.4631 | 0.0164 | 0.0160 | 0.0137 | 2.8540 | 2.5628 | 0.0057 | 0.0000 |
| 2,4-Dimethylpentane | 0.1121 | 0.0442 | 0.0595 | 0.0414 | 0.0880 | 0.2350 | 0.0000 | 0.0000 |
| Benzene | 0.3862 | 0.1231 | 0.0872 | 0.0919 | 0.1998 | 0.2686 | 0.0000 | 0.0050 |
| Cyclohexane | 0.0219 | 0.0085 | 0.0109 | 0.0075 | 0.0177 | 0.0000 | 0.0000 | 0.0000 |
| 2-Methylhexane | 0.5507 | 0.1767 | 0.3242 | 0.0000 | 0.3533 | 0.6553 | 0.0000 | 0.0000 |
| 2,3-Dimethylpentane | 0.3258 | 0.1429 | 0.2174 | 0.2020 | 0.2560 | 0.9489 | 0.0051 | 0.0000 |
| 3-Methylhexane | 0.0000 | 0.2271 | 0.4621 | 0.2817 | 0.4480 | 0.9310 | 0.0000 | 0.0000 |
| n-Heptane | 1.2952 | 0.3164 | 0.7085 | 0.3518 | 0.7147 | 1.3600 | 0.0000 | 0.0009 |
| Methylcyclohexane | 0.1831 | 0.0000 | 0.0000 | 0.0840 | 0.0000 | 0.4621 | 0.0000 | 0.0012 |
| 2,4-Dimethylhexane | 0.0550 | 0.1227 | 0.0364 | 0.1121 | 0.0376 | 0.2385 | 0.0061 | 0.0000 |
| 2,3,4-Trimethylpentane | 0.0309 | 0.2526 | 0.5542 | 0.2322 | 0.0216 | 0.3665 | 0.0799 | 0.0027 |
| Toluene | 0.5882 | 0.0236 | 0.3102 | 0.1370 | 0.3313 | 0.4900 | 0.0000 | 0.0038 |
| 2,3-Dimethylhexane | 0.0456 | 0.0175 | 0.0310 | 0.0137 | 0.0275 | 0.1998 | 0.0000 | 0.0000 |
| 2-Methylheptane | 0.4294 | 0.0236 | 0.0439 | 0.0197 | 0.2050 | 0.7450 | 0.0078 | 0.0000 |
| 3-Ethylhexane | 0.1786 | 0.0477 | 0.1203 | 0.0482 | 0.0935 | 0.3599 | 0.0000 | 0.0000 |
| n-Octane | 0.4324 | 0.0814 | 0.0870 | 0.0351 | 0.0874 | 1.3665 | 0.0088 | 0.0039 |
| Ethylbenzene | 0.1841 | 0.0755 | 0.1553 | 0.0472 | 0.0741 | 1.0917 | 0.0145 | 0.0051 |
| p-Xylene | 0.0000 | 0.0045 | 0.1452 | 0.0592 | 0.0000 | 0.2763 | 0.0000 | 0.0046 |
| m-Xylene | 0.2260 | 0.0334 | 0.0765 | 0.0250 | 0.0839 | 0.4733 | 0.0000 | 0.0000 |
| o-Xylene | 0.0891 | 0.0056 | 0.0552 | 0.0220 | 0.0280 | 0.2783 | 0.0057 | 0.0035 |
| n-Nonane | 0.1393 | 0.0186 | 0.0203 | 0.0370 | 0.0201 | 0.2195 | 0.0095 | 0.0074 |
| i-Propylbenzene | 0.0000 | 0.0027 | 0.0034 | 0.0025 | 0.0039 | 0.0743 | 0.0000 | 0.0000 |
| n-Propylbenzene | 0.0345 | 0.0234 | 0.0283 | 0.0061 | 0.0094 | 0.4000 | 0.0092 | 0.0064 |
| 3-Ethyltoluene | 0.0133 | 0.0072 | 0.0116 | 0.0000 | 0.0093 | 0.2899 | 0.0211 | 0.0097 |
| 1,3,5-Trimethylbenzene | 0.0269 | 0.0057 | 0.0187 | 0.0041 | 0.0000 | 0.0000 | 0.0186 | 0.0116 |
| 2-Ethyltoluene | 0.0258 | 0.0026 | 0.0182 | 0.0038 | 0.0036 | 0.1688 | 0.0118 | 0.0158 |
| t-butylbenzene | 0.0143 | 0.0084 | 0.0132 | 0.0000 | 0.0000 | 0.2103 | 0.0000 | 0.0000 |
| 1,2,4-Trimethylbenzene | 0.0066 | 0.0048 | 0.0046 | 0.0164 | 0.0042 | 0.4794 | 0.0000 | 0.0139 |
| i-butylbenzene | 0.0058 | 0.0000 | 0.0042 | 0.0000 | 0.0000 | 0.0605 | 0.0101 | 0.0000 |
| s-butylbenzene | 0.0074 | 0.0045 | 0.0045 | 0.0000 | 0.0021 | 0.0878 | 0.0000 | 0.0000 |
| n-Decane | 0.0057 | 0.0011 | 0.0290 | 0.0112 | 0.0000 | 0.0599 | 0.0184 | 0.0244 |
| 1,2,3-Trimethylbenzene | 0.0054 | 0.0000 | 0.0000 | 0.0000 | 0.0051 | 0.0000 | 0.0490 | 0.0057 |
| 1,3-Diethylbenzene | 0.0128 | 0.0000 | 0.0064 | 0.0000 | 0.0000 | 0.2104 | 0.0000 | 0.0015 |
| 1,4-Diethylbenzene | 0.0000 | 0.0042 | 0.0095 | 0.0000 | 0.0038 | 0.2106 | 0.0192 | 0.0225 |
| n-butylbenzene | 0.0078 | 0.0057 | 0.0049 | 0.0020 | 0.0000 | 0.0000 | 0.0000 | 0.0203 |
| 1,2-diethylbenzene | 0.0000 | 0.0000 | 0.0000 | 0.0000 | 0.0000 | 0.0000 | 0.0000 | 0.0041 |
| n-undecane | 0.0000 | 0.0000 | 0.0093 | 0.0000 | 0.0000 | 0.0999 | 0.0219 | 0.0000 |
| Other C4 | 0.0000 | 0.0000 | 0.0000 | 0.0000 | 0.0000 | 0.0000 | 0.0000 | 0.0000 |
| Other C5 | 2.8126 | 0.0000 | 0.6376 | 0.5484 | 1.6789 | 1.3806 | 0.0553 | 0.0126 |
| Other C6 | 6.9258 | 0.5288 | 5.9315 | 3.7219 | 4.2202 | 8.7054 | 0.0935 | 0.0171 |
| Other C7 | 3.0713 | 3.6994 | 2.9653 | 1.0916 | 3.0840 | 15.5060 | 0.1773 | 0.0106 |
| Other C8 | 1.8956 | 1.4513 | 1.6682 | 0.4752 | 0.9441 | 11.9369 | 0.6540 | 0.0655 |
| Other C9 | 0.7019 | 0.9881 | 0.6194 | 0.0943 | 0.1285 | 6.6643 | 0.8882 | 0.2110 |
| Other C10 | 0.1335 | 0.0484 | 0.0776 | 0.0302 | 0.0331 | 1.3815 | 0.5560 | 0.2885 |
| Other C11 | 0.0394 | 0.0092 | 0.0018 | 0.0056 | 0.0000 | 0.3470 | 0.1279 | 0.0000 |

Table 10 - Cat Canyon Summary Hydrocarbon Species by % Mass

| OF-40 | OF-41 | OF-42 | OF-43 | OF-44 | |
|---|---|---|---|---|---|
| Methane | 40.6929 | 10.0741 | 8.0981 | 0.0000 | 0.0000 |
| Ethane | 8.8839 | 20.1940 | 1.5655 | 1.6118 | 0.0000 |
| Propane | 14.1404 | 11.3004 | 4.9484 | 1.3702 | 0.0000 |
| i-Butane | 3.1034 | 1.5022 | 4.5482 | 0.0000 | 1.0505 |
| n-Butane | 8.2204 | 4.4444 | 16.7562 | 2.4984 | 0.0000 |
| 2,2-dimethylpropane | 0.0114 | 0.0000 | 0.0443 | 0.0000 | 0.0000 |
| i-Pentane | 2.8269 | 1.6489 | 18.5162 | 3.5461 | 4.3902 |
| n-Pentane | 0.8501 | 1.6241 | 18.2855 | 4.3522 | 5.2835 |
| 2,2-Dimethylbutane | 0.0000 | 0.0000 | 0.0000 | 0.0000 | 0.0000 |
| Cyclopentane | 0.2525 | 0.1323 | 0.0000 | 0.0000 | 1.0410 |
| 2,3-Dimethylbutane | 0.0000 | 0.0000 | 0.0000 | 0.0000 | 0.0000 |
| 2-Methylpentane | 1.5351 | 0.6920 | 5.8657 | 4.0751 | 6.1335 |
| 3-Methylpentane | 1.1323 | 0.6022 | 3.7394 | 0.0000 | 4.9084 |
| n-Hexane | 1.7048 | 0.9060 | 4.8494 | 5.7627 | 6.6935 |
| Methylcyclopentane | 1.1296 | 1.2395 | 2.9251 | 5.2924 | 5.9473 |
| 2,4-Dimethylpentane | 0.0375 | 0.0000 | 0.0000 | 0.0000 | 0.0000 |
| Benzene | 0.2509 | 1.8187 | 0.3463 | 9.1484 | 10.7339 |
| Cyclohexane | 0.0000 | 0.0000 | 0.0122 | 0.0000 | 0.0000 |
| 2-Methylhexane | 0.3618 | 0.2747 | 0.5003 | 0.0000 | 1.6592 |
| 2,3-Dimethylpentane | 0.2302 | 0.1935 | 0.3006 | 0.0000 | 1.3305 |
| 3-Methylhexane | 0.6061 | 0.5048 | 0.6828 | 0.0000 | 2.7133 |
| n-Heptane | 0.9354 | 0.9240 | 0.7250 | 5.2258 | 3.2642 |
| Methylcyclohexane | 0.6467 | 1.0305 | 0.5577 | 5.5640 | 3.2339 |
| 2,4-Dimethylhexane | 0.0000 | 0.0461 | 0.0000 | 0.0000 | 1.0936 |
| 2,3,4-Trimethylpentane | 0.0155 | 0.0000 | 0.0075 | 0.0000 | 0.0000 |
| Toluene | 0.4204 | 2.8143 | 0.1548 | 10.4338 | 6.7816 |
| 2,3-Dimethylhexane | 0.0453 | 0.0744 | 0.0159 | 0.0000 | 0.0000 |
| 2-Methylheptane | 0.3968 | 0.6905 | 0.0994 | 0.0000 | 0.0000 |
| 3-Ethylhexane | 0.1649 | 0.3057 | 0.0108 | 0.0000 | 0.7464 |
| n-Octane | 0.4462 | 1.1482 | 0.0601 | 4.3452 | 1.8149 |
| Ethylbenzene | 0.1989 | 1.2698 | 0.0247 | 4.5312 | 1.9672 |
| p-Xylene | 0.0800 | 0.3562 | 0.0077 | 4.9276 | 0.6668 |
| m-Xylene | 0.1463 | 1.0711 | 0.0126 | 0.0000 | 1.6627 |
| o-Xylene | 0.0813 | 0.7089 | 0.0080 | 4.5835 | 1.2487 |
| n-Nonane | 0.1951 | 1.5824 | 0.0082 | 4.1871 | 1.1148 |
| i-Propylbenzene | 0.0183 | 0.1644 | 0.0000 | 0.0000 | 0.0000 |
| n-Propylbenzene | 0.0456 | 0.5008 | 0.0000 | 0.0000 | 0.0000 |
| 3-Ethyltoluene | 0.0446 | 0.5516 | 0.0000 | 0.0000 | 0.0000 |
| 1,3,5-Trimethylbenzene | 0.0000 | 0.0000 | 0.0000 | 0.0000 | 0.0000 |
| 2-Ethyltoluene | 0.0000 | 0.1692 | 0.0000 | 0.0000 | 0.0000 |
| t-butylbenzene | 0.0337 | 0.2522 | 0.0000 | 0.0000 | 0.0000 |
| 1,2,4-Trimethylbenzene | 0.0473 | 0.6815 | 0.0000 | 4.9369 | 0.0000 |
| i-butylbenzene | 0.0000 | 0.0000 | 0.0000 | 0.0000 | 0.0000 |
| s-butylbenzene | 0.0000 | 0.2217 | 0.0000 | 0.0000 | 0.0000 |
| n-Decane | 0.0060 | 0.0694 | 0.0000 | 0.0000 | 0.0000 |
| 1,2,3-Trimethylbenzene | 0.0299 | 0.3868 | 0.0000 | 0.0000 | 0.0000 |
| 1,3-Diethylbenzene | 0.0246 | 0.4904 | 0.0000 | 0.0000 | 0.0000 |
| 1,4-Diethylbenzene | 0.0000 | 0.0000 | 0.0000 | 0.0000 | 0.0000 |
| n-butylbenzene | 0.0000 | 0.1752 | 0.0000 | 0.0000 | 0.0000 |
| 1,2-diethylbenzene | 0.0000 | 0.0000 | 0.0000 | 0.0000 | 0.0000 |
| n-undecane | 0.0000 | 1.2176 | 0.0000 | 0.0000 | 0.0000 |
| Other C4 | 1.1117 | 0.0000 | 0.0000 | 0.0000 | 0.0000 |
| Other C5 | 3.3706 | 0.6062 | 2.7335 | 0.0000 | 1.3944 |
| Other C6 | 1.6494 | 2.0726 | 2.6472 | 0.0000 | 9.5263 |
| Other C7 | 1.3692 | 2.4995 | 0.8324 | 0.0000 | 5.7191 |
| Other C8 | 1.3995 | 5.4748 | 0.0995 | 5.4339 | 4.5759 |
| Other C9 | 0.6859 | 8.4377 | 0.0106 | 8.1739 | 1.7149 |
| Other C10 | 0.3521 | 5.1144 | 0.0000 | 0.0000 | 1.5896 |
| Other C11 | 0.0684 | 1.7402 | 0.0000 | 0.0000 | 0.0000 |

Table 11 - Ventura Field Summary Hydrocarbon Species by % Mass

| | OF-50 | OF-51 | OF-52 | OF-53 |
|---|---|---|---|---|
| Methane | 26.3353 | 24.7704 | 12.8696 | 69.8572 |
| Ethane | 6.4585 | 7.5008 | 6.8363 | 9.0459 |
| Propane | 18.9621 | 23.1831 | 25.1314 | 4.9068 |
| i-Butane | 6.0712 | 7.6461 | 7.9999 | 0.6395 |
| n-Butane | 14.4739 | 16.1895 | 19.0352 | 2.1218 |
| 2,2-dimethylpropane | 0.0146 | 0.0162 | 0.0190 | 0.0000 |
| i-Pentane | 5.8607 | 5.7925 | 6.7579 | 2.5646 |
| n-Pentane | 5.1406 | 4.6708 | 5.8342 | 2.6707 |
| 2,2-Dimethylbutane | 0.0000 | 0.0520 | 0.0000 | 0.0235 |
| Cyclopentane | 0.0000 | 0.0000 | 0.0000 | 0.4227 |
| 2,3-Dimethylbutane | 1.5218 | 1.1875 | 0.0000 | 0.0000 |
| 2-Methylpentane | 0.0000 | 0.0071 | 0.0000 | 0.0000 |
| 3-Methylpentane | 0.0000 | 0.8659 | 1.0630 | 0.0000 |
| n-Hexane | 1.5428 | 1.1171 | 1.4054 | 0.6655 |
| Methylcyclopentane | 1.9954 | 1.2884 | 1.8668 | 0.8751 |
| 2,4-Dimethylpentane | 0.0469 | 0.0325 | 0.0415 | 0.0192 |
| Benzene | 0.1318 | 0.3128 | 0.1360 | 0.0970 |
| Cyclohexane | 0.0059 | 0.0000 | 0.0052 | 0.0000 |
| 2-Methylhexane | 0.2858 | 0.1599 | 0.2234 | 0.0914 |
| 2,3-Dimethylpentane | 0.1590 | 0.0843 | 0.1171 | 0.0511 |
| 3-Methylhexane | 0.4622 | 0.2371 | 0.3428 | 0.1400 |
| n-Heptane | 0.6540 | 0.2606 | 0.4833 | 0.1851 |
| Methylcyclohexane | 0.8599 | 0.2270 | 0.6997 | 0.2890 |
| 2,4-Dimethylhexane | 0.0282 | 0.0087 | 0.0000 | 0.0000 |
| 2,3,4-Trimethylpentane | 0.0126 | 0.0000 | 0.0084 | 0.0000 |
| Toluene | 0.2022 | 0.2009 | 0.1689 | 0.1034 |
| 2,3-Dimethylhexane | 0.0253 | 0.0071 | 0.0153 | 0.0000 |
| 2-Methylheptane | 0.0378 | 0.0000 | 0.1659 | 0.0795 |
| 3-Ethylhexane | 0.1086 | 0.0000 | 0.0819 | 0.0000 |
| n-Octane | 0.2432 | 0.0797 | 0.1575 | 0.0881 |
| Ethylbenzene | 0.1134 | 0.0976 | 0.0743 | 0.0492 |
| p-Xylene | 0.0620 | 0.0787 | 0.0368 | 0.0336 |
| m-Xylene | 0.0950 | 0.0000 | 0.0745 | 0.0652 |
| o-Xylene | 0.0467 | 0.0461 | 0.0341 | 0.0502 |
| n-Nonane | 0.1024 | 0.0383 | 0.0606 | 0.0629 |
| i-Propylbenzene | 0.0078 | 0.0000 | 0.0000 | 0.0000 |
| n-Propylbenzene | 0.0229 | 0.0174 | 0.0000 | 0.0191 |
| 3-Ethyltoluene | 0.0000 | 0.0000 | 0.0166 | 0.0000 |
| 1,3,5-Trimethylbenzene | 0.0199 | 0.0000 | 0.0000 | 0.0000 |
| 2-Ethyltoluene | 0.0093 | 0.0000 | 0.0000 | 0.0123 |
| t-butylbenzene | 0.0117 | 0.0000 | 0.0062 | 0.0000 |
| 1,2,4-Trimethylbenzene | 0.0351 | 0.0000 | 0.0228 | 0.0000 |
| i-butylbenzene | 0.0000 | 0.0000 | 0.0000 | 0.0138 |
| s-butylbenzene | 0.0000 | 0.0000 | 0.0000 | 0.0178 |
| n-Decane | 0.0196 | 0.0000 | 0.0000 | 0.0100 |
| 1,2,3-Trimethylbenzene | 0.0068 | 0.0000 | 0.0000 | 0.0539 |
| 1,3-Diethylbenzene | 0.0000 | 0.0000 | 0.0000 | 0.0259 |
| 1,4-Diethylbenzene | 0.0000 | 0.0000 | 0.0000 | 0.0000 |
| n-butylbenzene | 0.0000 | 0.0000 | 0.0000 | 0.0000 |
| 1,2-diethylbenzene | 0.0000 | 0.0000 | 0.0000 | 0.0000 |
| n-undecane | 0.0205 | 0.0000 | 0.0000 | 0.0000 |
| Other C4 | 0.0000 | 0.0246 | 0.0060 | 0.0000 |
| Other C5 | 2.0335 | 1.4400 | 2.4045 | 1.3762 |
| Other C6 | 2.4888 | 1.2186 | 3.7835 | 0.9365 |
| Other C7 | 1.7315 | 0.5669 | 1.0877 | 0.6074 |
| Other C8 | 0.9871 | 0.3069 | 0.5952 | 0.5527 |
| Other C9 | 0.4512 | 0.2100 | 0.2615 | 0.8476 |
| Other C10 | 0.0890 | 0.0568 | 0.0577 | 0.3196 |
| Other C11 | 0.0056 | 0.0000 | 0.0123 | 0.0092 |

Table 12 - Wilmington Field Summary Hydrocarbon Species by % Mass

| | OF-60 | OF-61 | OF-62 | OF-63 |
|---|---|---|---|---|
| Methane | 0.0000 | 69.7258 | 86.2213 | 9.3724 |
| Ethane | 0.2429 | 3.4827 | 2.5933 | 8.6278 |
| Propane | 0.8504 | 3.9190 | 1.9722 | 3.7709 |
| i-Butane | 0.8152 | 2.2601 | 1.6328 | 7.6645 |
| n-Butane | 2.1302 | 3.9861 | 1.9669 | 14.2861 |
| 2,2-dimethylpropane | 0.0220 | 0.0256 | 0.0258 | 0.1059 |
| i-Pentane | 2.2168 | 2.5187 | 1.1618 | 8.6462 |
| n-Pentane | 2.2614 | 1.9546 | 0.7548 | 5.4645 |
| 2,2-Dimethylbutane | 0.0338 | 0.0604 | 0.0351 | 0.1539 |
| Cyclopentane | 0.4349 | 0.0000 | 0.0000 | 0.5612 |
| 2,3-Dimethylbutane | 0.3434 | 0.2522 | 0.1145 | 0.0000 |
| 2-Methylpentane | 1.2635 | 0.8062 | 0.2607 | 2.6425 |
| 3-Methylpentane | 1.0717 | 0.6593 | 0.2066 | 1.9294 |
| n-Hexane | 1.3441 | 0.6473 | 0.1832 | 1.9154 |
| Methylcyclopentane | 2.5612 | 0.0000 | 0.3367 | 3.1383 |
| 2,4-Dimethylpentane | 0.1425 | 0.0687 | 0.0243 | 0.1542 |
| Benzene | 0.1265 | 0.0394 | 0.0052 | 0.5559 |
| Cyclohexane | 0.0358 | 0.0177 | 0.0076 | 0.0316 |
| 2-Methylhexane | 0.4420 | 0.1455 | 0.0371 | 0.5707 |
| 2,3-Dimethylpentane | 0.7363 | 0.2629 | 0.0868 | 0.5102 |
| 3-Methylhexane | 0.8066 | 0.2506 | 0.0661 | 0.8294 |
| n-Heptane | 0.9793 | 0.2182 | 0.0454 | 1.0401 |
| Methylcyclohexane | 0.5567 | 0.1322 | 0.0343 | 2.0397 |
| 2,4-Dimethylhexane | 0.8914 | 0.0382 | 0.0473 | 0.1030 |
| 2,3,4-Trimethylpentane | 2.8710 | 0.0222 | 0.1755 | 0.0523 |
| Toluene | 0.5115 | 0.0617 | 0.0127 | 0.1805 |
| 2,3-Dimethylhexane | 0.1770 | 0.0270 | 0.0106 | 0.0840 |
| 2-Methylheptane | 0.2675 | 0.0826 | 0.0169 | 0.6672 |
| 3-Ethylhexane | 0.2710 | 0.0351 | 0.0097 | 0.3136 |
| n-Octane | 1.7033 | 0.1645 | 0.0527 | 0.6727 |
| Ethylbenzene | 1.5428 | 0.0704 | 0.0429 | 0.5052 |
| p-Xylene | 0.7140 | 0.0002 | 0.0065 | 0.0000 |
| m-Xylene | 0.6658 | 0.0293 | 0.0137 | 0.5832 |
| o-Xylene | 0.4854 | 0.0184 | 0.0055 | 0.2485 |
| n-Nonane | 0.1867 | 0.0000 | 0.0067 | 0.3525 |
| i-Propylbenzene | 0.0700 | 0.0005 | 0.0000 | 0.0516 |
| n-Propylbenzene | 0.4185 | 0.0134 | 0.0046 | 0.1527 |
| 3-Ethyltoluene | 0.3413 | 0.0154 | 0.0000 | 0.1630 |
| 1,3,5-Trimethylbenzene | 0.4177 | 0.0006 | 0.0000 | 0.1066 |
| 2-Ethyltoluene | 0.1949 | 0.0020 | 0.0000 | 0.0694 |
| t-butylbenzene | 0.4297 | 0.0000 | 0.0000 | 0.0000 |
| 1,2,4-Trimethylbenzene | 0.3591 | 0.0009 | 0.0000 | 0.2217 |
| i-butylbenzene | 0.3485 | 0.0007 | 0.0000 | 0.0500 |
| s-butylbenzene | 0.2913 | 0.0007 | 0.0000 | 0.0608 |
| n-Decane | 0.1863 | 0.0004 | 0.0000 | 0.0000 |
| 1,2,3-Trimethylbenzene | 0.2014 | 0.0208 | 0.0000 | 0.1393 |
| 1,3-Diethylbenzene | 0.3057 | 0.0006 | 0.0000 | 0.0486 |
| 1,4-Diethylbenzene | 0.4772 | 0.0000 | 0.0000 | 0.0457 |
| n-butylbenzene | 0.4384 | 0.0012 | 0.0000 | 0.0000 |
| 1,2-diethylbenzene | 0.2090 | 0.0000 | 0.0000 | 0.0000 |
| n-undecane | 0.6217 | 0.0000 | 0.0000 | 0.0000 |
| Other C4 | 0.2737 | 0.0000 | 0.0000 | 0.0000 |
| Other C5 | 0.0574 | 0.3113 | 0.0918 | 0.9634 |
| Other C6 | 7.5924 | 3.7219 | 0.7104 | 5.6426 |
| Other C7 | 12.3951 | 2.5815 | 0.5625 | 5.4870 |
| Other C8 | 14.6463 | 1.0133 | 0.3413 | 5.4826 |
| Other C9 | 13.7861 | 0.2699 | 0.1006 | 2.7415 |
| Other C10 | 11.5726 | 0.0440 | 0.0157 | 0.6598 |
| Other C11 | 4.6614 | 0.0181 | 0.0000 | 0.1404 |

Table 13 - West Coyote Summary Hydrocarbon Species by % Mass

| | OF-70 | OF-71 | OF-72 | OF-73 |
|---|---|---|---|---|
| Methane | 58.1224 | 35.6628 | 15.1756 | 33.8652 |
| Ethane | 4.7094 | 3.3726 | 5.6015 | 5.6250 |
| Propane | 5.4105 | 5.2351 | 10.5062 | 8.0447 |
| i-Butane | 3.2893 | 3.6774 | 6.7594 | 3.6714 |
| n-Butane | 5.4490 | 8.0761 | 12.7356 | 7.9733 |
| 2,2-dimethylpropane | 0.0451 | 0.0556 | 0.0896 | 0.0445 |
| i-Pentane | 3.3785 | 6.4922 | 8.4747 | 5.6750 |
| n-Pentane | 2.2557 | 4.1816 | 5.4918 | 4.0613 |
| 2,2-Dimethylbutane | 0.0626 | 0.0233 | 0.1885 | 0.0000 |
| Cyclopentane | 0.2334 | 0.0000 | 0.0000 | 0.9262 |
| ,3-Dimethylbutane | 0.0000 | 0.5183 | 0.6525 | 0.4254 |
| 2-Methylpentane | 1.1015 | 0.6451 | 2.6275 | 2.3633 |
| 3-Methylpentane | 0.7976 | 0.8300 | 1.9876 | 1.7445 |
| n-Hexane | 0.8718 | 1.9254 | 1.9240 | 1.9775 |
| Methylcyclopentane | 1.2895 | 3.4133 | 0.0000 | 3.2691 |
| 2,4-Dimethylpentane | 0.0657 | 0.1657 | 0.1842 | 0.1464 |
| Benzene | 0.2862 | 1.0242 | 0.5061 | 0.7648 |
| Cyclohexane | 0.0141 | 0.0455 | 0.0430 | 0.0375 |
| 2-Methylhexane | 0.2558 | 0.6520 | 0.5803 | 0.6403 |
| 2,3-Dimethylpentane | 0.2155 | 0.4700 | 0.5827 | 0.4173 |
| 3-Methylhexane | 0.3641 | 0.9465 | 0.8370 | 0.9254 |
| n-Heptane | 0.0516 | 1.0903 | 0.9119 | 1.2199 |
| Methylcyclohexane | 0.8363 | 0.0000 | 0.0000 | 1.9907 |
| 2,4-Dimethylhexane | 0.0436 | 0.3761 | 0.0963 | 0.6066 |
| 2,3,4-Trimethylpentane | 0.4135 | 0.6770 | 0.9547 | 0.0362 |
| Toluene | 0.0930 | 0.2632 | 0.2392 | 0.4144 |
| 2,3-Dimethylhexane | 0.0351 | 0.0644 | 0.0690 | 0.0570 |
| 2-Methylheptane | 0.3157 | 0.0911 | 0.4542 | 0.0000 |
| 3-Ethylhexane | 0.1527 | 0.2564 | 0.2328 | 0.2375 |
| n-Octane | 0.1655 | 0.6430 | 0.2912 | 0.2312 |
| Ethylbenzene | 0.2061 | 0.2579 | 0.2439 | 0.2070 |
| p-Xylene | 0.2752 | 0.3141 | 0.2734 | 0.2357 |
| m-Xylene | 0.1314 | 0.0000 | 0.1329 | 0.0000 |
| o-Xylene | 0.1084 | 0.1187 | 0.1125 | 0.0911 |
| n-Nonane | 0.1806 | 0.0450 | 0.1687 | 0.0945 |
| i-Propylbenzene | 0.0104 | 0.0099 | 0.0093 | 0.0072 |
| n-Propylbenzene | 0.0494 | 0.0382 | 0.0499 | 0.0304 |
| 3-Ethyltoluene | 0.0245 | 0.0187 | 0.0229 | 0.0145 |
| 1,3,5-Trimethylbenzene | 0.0422 | 0.0000 | 0.0435 | 0.0000 |
| 2-Ethyltoluene | 0.0419 | 0.0222 | 0.0441 | 0.0203 |
| t-butylbenzene | 0.0231 | 0.0157 | 0.0226 | 0.0130 |
| 1,2,4-Trimethylbenzene 0.0150 | 0.0092 | 0.0126 | 0.0071 | |
| i-butylbenzene | 0.0000 | 0.0000 | 0.0000 | 0.0027 |
| s-butylbenzene | 0.0000 | 0.0115 | 0.0000 | 0.0082 |
| n-Decane | 0.0000 | 0.0000 | 0.0933 | 0.0255 |
| 1,2,3-Trimethylbenzene | 0.0156 | 0.0101 | 0.0161 | 0.0075 |
| 1,3-Diethylbenzene | 0.0084 | 0.0000 | 0.0000 | 0.0018 |
| 1,4-Diethylbenzene | 0.0000 | 0.0131 | 0.0000 | 0.0090 |
| n-butylbenzene | 0.0146 | 0.0000 | 0.0150 | 0.0063 |
| 1,2-diethylbenzene | 0.0046 | 0.0000 | 0.0000 | 0.0019 |
| n-undecane | 0.0000 | 0.0000 | 0.0000 | 0.0084 |
| Other C4 | 0.0000 | 0.0000 | 0.0000 | 0.0000 |
| Other C5 | 0.3807 | 4.2101 | 1.0699 | 0.1301 |
| Other C6 | 2.3344 | 5.1428 | 9.4645 | 5.1712 |
| Other C7 | 1.7070 | 5.1750 | 5.3237 | 3.2849 |
| Other C8 | 2.4206 | 2.5361 | 2.8911 | 2.4562 |
| Other C9 | 1.2098 | 1.0006 | 1.2675 | 0.6445 |
| Other C10 | 0.4144 | 0.1483 | 0.4558 | 0.1150 |
| Other C11 | 0.0571 | 0.0283 | 0.0696 | 0.0146 |

Table 14 - Database Format

| | Methane | Ethane | Propane | i-Butane | n-Butane | 2,2-dimet | i-Pentane | n-Pentan | 2,2-Dime | Cyclopen | 2,3-Dime | 2-Methyl | 3-Methyl | n-Hexane | Methylcy | 2,4-Dime | Benzene | Cyclohex |
|---|---|---|---|---|---|---|---|---|---|---|---|---|---|---|---|---|---|---|
| OF-01 | 0.1616 | 0.0931 | 0.1499 | 0.0000 | 0.1825 | 0.0000 | 0.0000 | 0.0000 | 0.5323 | 0.0000 | 0.3055 | 0.0000 | 0.0000 | 0.0724 | 0.0000 | 0.0931 | 0.1318 | 0.0000 |
| OF-02 | 81.3998 | 0.1565 | 0.0955 | 0.0647 | 0.0842 | 0.3083 | 0.1803 | 0.0321 | 0.3794 | 0.0000 | 1.3302 | 0.0203 | 0.0737 | 0.0194 | 0.0121 | 0.2317 | 0.0137 | 0.1322 |
| OF-03 | 62.0949 | 0.1214 | 0.0781 | 0.0531 | 0.0684 | 0.2510 | 0.1558 | 0.0250 | 0.3487 | 0.0000 | 1.2881 | 0.0174 | 0.0712 | 0.0082 | 0.1412 | 0.2654 | 0.0000 | 0.1564 |
| OF-04 | 60.7789 | 1.3946 | 0.3922 | 0.1601 | 0.0914 | 0.6376 | 0.1549 | 0.0234 | 0.2715 | 0.0000 | 0.8293 | 0.0025 | 0.0696 | 0.3656 | 0.0153 | 0.1847 | 0.2571 | 0.1040 |
| OF-05 | 95.9289 | 0.2717 | 0.0716 | 0.0542 | 0.0352 | 0.1440 | 0.0434 | 0.0066 | 0.0599 | 0.1704 | 0.0000 | 0.0000 | 0.0093 | 0.0000 | 0.0000 | 0.0341 | 0.0000 | 0.0000 |
| OF-06 | 4.4862 | 0.4191 | 0.3025 | 0.3003 | 0.2139 | 0.3897 | 0.4758 | 0.0696 | 0.9194 | 0.0000 | 2.9941 | 0.0637 | 0.2005 | 0.0370 | 0.3065 | 0.6060 | 0.0177 | 0.3697 |
| OF-10 | 44.8895 | 7.9019 | 13.0885 | 3.1748 | 10.3318 | 0.1106 | 2.8767 | 2.7182 | 0.1824 | 0.4262 | 0.0000 | 1.0121 | 0.6783 | 1.0797 | 1.5561 | 0.0000 | 0.0799 | 0.0255 |
| OF-11 | 37.7408 | 7.6800 | 14.8836 | 3.3993 | 6.7414 | 0.1170 | 1.5246 | 1.4220 | 0.1976 | 0.4740 | 0.0000 | 1.1492 | 0.7795 | 1.2686 | 1.9090 | 0.1213 | 0.0912 | 0.0307 |
| OF-12 | 33.4312 | 12.7717 | 17.2663 | 3.4171 | 10.8072 | 0.1195 | 3.3797 | 3.3991 | 0.1976 | 0.4656 | 0.0000 | 0.9909 | 0.6824 | 1.0330 | 1.7244 | 0.1125 | 0.0694 | 0.0293 |
| OF-13 | 11.8005 | 9.5479 | 17.0718 | 5.7194 | 17.3072 | 0.0427 | 2.0964 | 3.2146 | 0.0925 | 0.2939 | 0.0000 | 1.7049 | 1.6037 | 3.2012 | 2.7693 | 0.0910 | 0.4320 | 0.0000 |
| OF-14 | 31.9680 | 15.4250 | 17.7471 | 3.8778 | 11.4358 | 0.1169 | 3.6524 | 3.4792 | 0.1790 | 0.4103 | 0.0000 | 0.9906 | 0.1099 | 0.9704 | 1.5368 | 0.0928 | 0.0674 | 0.0237 |
| OF-15 | 19.4226 | 8.4997 | 15.3786 | 4.2802 | 3.3683 | 0.6509 | 1.6843 | 1.5078 | 0.0966 | 0.1599 | 0.0000 | 1.0162 | 0.0000 | 2.4788 | 1.4020 | 0.0923 | 0.4661 | 0.0177 |
| OF-16 | 35.1586 | 3.7104 | 12.6201 | 3.2037 | 15.2084 | 0.1633 | 1.8193 | 3.5079 | 0.3145 | 0.7297 | 0.0000 | 0.5465 | 0.4636 | 0.8823 | 3.0811 | 0.1934 | 0.0287 | 0.0486 |
| OF-17 | 26.7810 | 7.5402 | 14.1825 | 5.0340 | 13.2046 | 0.0420 | 4.4784 | 3.0220 | 0.0877 | 0.2727 | 0.0000 | 1.2021 | 1.4428 | 2.3533 | 2.4687 | 0.0791 | 0.2989 | 0.0164 |
| OF-20 | 0.6309 | 13.8534 | 20.3860 | 1.9291 | 17.5464 | 0.0456 | 5.9460 | 8.3204 | 0.0964 | 0.0000 | 0.3293 | 1.7627 | 1.6061 | 3.0647 | 3.4631 | 0.1121 | 0.3862 | 0.0219 |
| OF-21 | 47.8262 | 10.1622 | 13.5873 | 2.7121 | 7.7710 | 0.0203 | 2.9425 | 3.3931 | 0.0438 | 0.0000 | 0.1474 | 1.0353 | 0.6445 | 1.1569 | 0.0164 | 0.0442 | 0.1231 | 0.0085 |
| OF-22 | 44.8636 | 6.8113 | 10.3987 | 2.5031 | 8.2760 | 0.0185 | 3.5109 | 3.9112 | 0.0407 | 0.1801 | 0.0000 | 1.3757 | 0.9477 | 1.5742 | 0.0160 | 0.0595 | 0.0872 | 0.0109 |
| OF-23 | 45.7334 | 9.2589 | 13.3879 | 3.0755 | 9.7694 | 0.0251 | 3.7319 | 3.8510 | 0.0409 | 0.1537 | 0.0000 | 1.1674 | 0.7538 | 1.1753 | 0.0137 | 0.0414 | 0.0919 | 0.0075 |
| OF-24 | 25.6069 | 7.9440 | 16.7611 | 4.2843 | 14.0011 | 0.0415 | 5.0878 | 5.6848 | 0.0828 | 0.2917 | 0.0000 | 1.0834 | 1.0913 | 1.9673 | 2.8540 | 0.0880 | 0.1998 | 0.0177 |
| OF-25 | 2.7544 | 5.4703 | 4.5376 | 2.1106 | 6.6176 | 0.2065 | 5.3812 | 4.3558 | 0.2502 | 0.6577 | 0.0000 | 2.1277 | 1.4123 | 2.3156 | 2.5628 | 0.2350 | 0.2686 | 0.0000 |
| OF-26 | 95.9626 | 0.5781 | 0.1836 | 0.0375 | 0.1228 | 0.0794 | 0.0535 | 0.0456 | 0.0000 | 0.0000 | 0.0191 | 0.0223 | 0.0000 | 0.0206 | 0.0057 | 0.0000 | 0.0000 | 0.0000 |
| OF-27 | 98.1996 | 0.6958 | 0.1861 | 0.0213 | 0.0335 | 0.0554 | 0.0080 | 0.0079 | 0.0050 | 0.0000 | 0.0011 | 0.0031 | 0.0000 | 0.0038 | 0.0000 | 0.0000 | 0.0050 | 0.0000 |
| OF-40 | 40.6929 | 8.8839 | 14.1404 | 3.1034 | 8.2204 | 0.0114 | 2.8269 | 0.8501 | 0.0000 | 0.2525 | 0.0000 | 1.5351 | 1.1323 | 1.7048 | 1.1296 | 0.0375 | 0.2509 | 0.0000 |
| OF-41 | 10.0741 | 20.1940 | 11.3004 | 1.5022 | 4.4444 | 0.0000 | 1.6489 | 1.6241 | 0.0000 | 0.1323 | 0.0000 | 0.6920 | 0.6022 | 0.9060 | 1.2395 | 0.0000 | 1.8187 | 0.0000 |
| OF-42 | 8.0981 | 1.5655 | 4.9484 | 4.5482 | 16.7562 | 0.0443 | 18.5162 | 18.2855 | 0.0000 | 0.0000 | 0.0000 | 5.8657 | 3.7394 | 4.8494 | 2.9251 | 0.0000 | 0.3463 | 0.0122 |
| OF-43 | 0.0000 | 1.6118 | 1.3702 | 0.0000 | 2.4984 | 0.0000 | 3.5461 | 4.3522 | 0.0000 | 0.0000 | 0.0000 | 4.0751 | 0.0000 | 5.7627 | 5.2924 | 0.0000 | 9.1484 | 0.0000 |
| OF-44 | 0.0000 | 0.0000 | 0.0000 | 1.0505 | 0.0000 | 0.0000 | 4.3902 | 5.2835 | 0.0000 | 1.0410 | 0.0000 | 6.1335 | 4.9084 | 6.6935 | 5.9473 | 0.0000 | 10.7339 | 0.0000 |
| OF-50 | 26.3353 | 6.4585 | 18.9621 | 6.0712 | 14.4739 | 0.0146 | 5.8607 | 5.1406 | 0.0000 | 0.0000 | 1.5218 | 0.0000 | 0.0000 | 1.5428 | 1.9954 | 0.0469 | 0.1318 | 0.0059 |
| OF-51 | 24.7704 | 7.5008 | 23.1831 | 7.6461 | 16.1895 | 0.0162 | 5.7925 | 4.6708 | 0.0520 | 0.0000 | 1.1875 | 0.0071 | 0.8659 | 1.1171 | 1.2884 | 0.0325 | 0.3128 | 0.0000 |
| OF-52 | 12.8696 | 6.8363 | 25.1314 | 7.9999 | 19.0352 | 0.0190 | 6.7579 | 5.8342 | 0.0000 | 0.0000 | 0.0000 | 0.0000 | 1.0630 | 1.4054 | 1.8668 | 0.0415 | 0.1360 | 0.0052 |
| OF-53 | 69.8572 | 9.0459 | 4.9068 | 0.6395 | 2.1218 | 0.0000 | 2.5646 | 2.6707 | 0.0235 | 0.4227 | 0.0000 | 0.0000 | 0.0000 | 0.6655 | 0.8751 | 0.0192 | 0.0970 | 0.0000 |
| OF-60 | 0.0000 | 0.2429 | 0.8504 | 0.8152 | 2.1302 | 0.0220 | 2.2168 | 2.2614 | 0.0338 | 0.4349 | 0.3434 | 1.2635 | 1.0717 | 1.3441 | 2.5612 | 0.1425 | 0.1265 | 0.0358 |
| OF-61 | 69.7258 | 3.4827 | 3.9190 | 2.2601 | 3.9861 | 0.0256 | 2.5187 | 1.9546 | 0.0604 | 0.0000 | 0.2522 | 0.8062 | 0.6593 | 0.6473 | 0.0000 | 0.0687 | 0.0394 | 0.0177 |
| OF-62 | 86.2213 | 2.5933 | 1.9722 | 1.6328 | 1.9669 | 0.0258 | 1.1618 | 0.7548 | 0.0351 | 0.0000 | 0.1145 | 0.2607 | 0.2066 | 0.1832 | 0.3367 | 0.0243 | 0.0052 | 0.0076 |
| OF-63 | 9.3724 | 8.6278 | 3.7709 | 7.6645 | 14.2861 | 0.1059 | 8.6462 | 5.4645 | 0.1539 | 0.5612 | 0.0000 | 2.6425 | 1.9294 | 1.9154 | 3.1383 | 0.1542 | 0.5559 | 0.0316 |
| OF-70 | 58.1224 | 4.7094 | 5.4105 | 3.2893 | 5.4490 | 0.0451 | 3.3785 | 2.2557 | 0.0626 | 0.2334 | 0.0000 | 1.1015 | 0.7976 | 0.8718 | 1.2895 | 0.0657 | 0.2862 | 0.0141 |
| OF-71 | 35.6628 | 3.3726 | 5.2351 | 3.6774 | 8.0761 | 0.0556 | 6.4922 | 4.1816 | 0.0233 | 0.0000 | 0.5183 | 0.6451 | 0.8300 | 1.9254 | 3.4133 | 0.1657 | 1.0242 | 0.0455 |
| OF-72 | 15.1756 | 5.6015 | 10.5062 | 6.7594 | 12.7356 | 0.0896 | 8.4747 | 5.4918 | 0.1885 | 0.0000 | 0.6525 | 2.6275 | 1.9876 | 1.9240 | 0.0000 | 0.1842 | 0.5061 | 0.0430 |
| OF-73 | 33.8652 | 5.6250 | 8.0447 | 3.6714 | 7.9733 | 0.0445 | 5.6750 | 4.0613 | 0.0000 | 0.9262 | 0.4254 | 2.3633 | 1.7445 | 1.9775 | 3.2691 | 0.1464 | 0.7648 | 0.0375 |

I. Discussion of Results

To assess variability introduced by the sampling process, duplicate samples OF-2 and OF-3 were taken from the same point, within 30 minutes of each other. Table 15 shows that these samples agree fairly well with each other. The largest difference was in the methane values: 81.4 vs. 62.0 %. These samples were collected by bagging a valve, and capturing the bagged emissions into a stainless steel canister. It was impossible to keep the sampling time constant for these two runs. The "leak rate" of the sampled valve was not constant. Another potential source of variability is a compositional change in the emissions with respect to time. In any case, most constituents other than methane agreed within 0.1 % absolute, or 30 % relative. These values probably represent realistic estimates of the overall uncertainty in the values listed in the summary tables.

Three samples (OF-43,44 and 60) were found to contain no methane. These samples were obtained from open sumps. The methane content of samples taken directly from well heads at the Kern River Facility ranged from 5 to 80 % of the total hydrocarbons. Since methane was determined separately from the other hydrocarbons, a sensitivity study was undertaken, to estimate the effect of errors in the methane concentration on the overall results. The results of this study (Table 16) show that errors in the methane analysis should not unduly influence the overall results. In general, the overall uncertainty in the % composition values is proportional to the error in the methane concentration.

The analytical methods used in this study yielded chromatograms containing as many as several hundred peaks. As discussed earlier, some peaks remained unidentified, and were listed as "Other Cn". Table 17 shows information on these compounds. The study-wide average for "Others" was 17%. In other words, an average of 83 % of the total hydrocarbon mass was identified. There are a few notable deviations from this average. The average value for "others" in the Kern River field was 36 %, more than twice the overall average. Samples OF-1 and OF-6 show values of about 75 % unidentified compounds. This field produces heavy crude (API gravity: 13.6$^{o}$) by steamflood. Sample OF-1 came from the headspace of a gage tank open to the atmosphere (no vapor recovery), in close proximity to well 406. The oil in the tank was at 72$^{o}$ C. These two conditions evidently resulted in a depletion of the lighter hydrocarbons, which contribute a fair fraction of the mass for samples taken at other fields. Unlike most other samples, OF-1 showed most of its hydrocarbon mass above the C7 range, with a number of "heavy" peaks not found in other samples. Well head samples taken at well 406 (OF-2 and OF-3) contained 60 - 80 % methane. It is likely that the elevated temperature of all samples in this field is responsible for the higher amounts of heavy hydrocarbons not identified.

Consistent with the original Request for Proposal, results from all light, medium and heavy samples have been summarized in Table 18.

## Table 15 - Sampling Variability

| | OF-02 | OF-03 | DIFFERENCE absolute | % relative to mean |
|---|---|---|---|---|
| Methane | 81.3998 | 62.0949 | 19.30 | 26.91 |
| Ethane | 0.1565 | 0.1214 | 0.04 | 25.23 |
| Propane | 0.0955 | 0.0781 | 0.02 | 20.07 |
| i-Butane | 0.0647 | 0.0531 | 0.01 | 19.61 |
| **n-Butane** | **0.0842** | **0.0684** | **0.02** | **20.80** |
| 2,2-dimethylpropane | 0.3083 | 0.2510 | 0.06 | 20.50 |
| i-Pentane | 0.1803 | 0.1558 | 0.02 | 14.61 |
| **n-Pentane** | **0.0321** | **0.0250** | **0.01** | **24.88** |
| 2,2-Dimethylbutane | 0.3794 | 0.3487 | 0.03 | 8.44 |
| Cyclopentane | 0.0000 | 0.0000 | 0.00 | N/A |
| 2,3-Dimethylbutane | 1.3302 | 1.2881 | 0.04 | 3.21 |
| 2-Methylpentane | 0.0203 | 0.0174 | 0.00 | 15.31 |
| 3-Methylpentane | 0.0737 | 0.0712 | 0.00 | 3.41 |
| **n-Hexane** | **0.0194** | **0.0082** | **0.01** | **81.78** |
| Methylcyclopentane | 0.0121 | 0.1412 | -0.13 | -168.42 |
| 2,4-Dimethylpentane | 0.2317 | 0.2654 | -0.03 | -13.54 |
| Benzene | 0.0137 | 0.0000 | 0.01 | N/A |
| Cyclohexane | 0.1322 | 0.1564 | -0.02 | -16.75 |
| 2-Methylhexane | 0.6399 | 0.7923 | -0.15 | -21.28 |
| 2,3-Dimethylpentane | 0.0000 | 0.0000 | 0.00 | N/A |
| 3-Methylhexane | 0.0223 | 0.0228 | -0.00 | -2.15 |
| **n-Heptane** | **0.0000** | **0.0000** | **0.00** | **N/A** |
| Methylcyclohexane | 0.0158 | 0.0169 | -0.00 | -6.24 |
| 2,4-Dimethylhexane | 0.1780 | 0.2580 | -0.08 | -36.68 |
| 2,3,4-Trimethylpentane | 0.1985 | 0.2951 | -0.10 | -39.10 |
| Toluene | 0.0800 | 0.1192 | -0.04 | -39.29 |
| 2,3-Dimethylhexane | 0.0466 | 0.0566 | -0.01 | -19.50 |
| 2-Methylheptane | 0.0298 | 0.0513 | -0.02 | -52.97 |
| 3-Ethylhexane | 0.1108 | 0.1775 | -0.07 | -46.26 |
| **n-Octane** | **0.8900** | **1.4281** | **-0.54** | **-46.42** |
| Ethylbenzene | 0.4798 | 0.7963 | -0.32 | -49.61 |
| p-Xylene | 0.0155 | 0.0250 | -0.01 | -46.99 |
| m-Xylene | 0.0091 | 0.0096 | -0.00 | -4.97 |
| o-Xylene | 0.1397 | 0.2040 | -0.06 | -37.39 |
| **n-Nonane** | **0.0804** | **0.1463** | **-0.07** | **-58.18** |
| i-Propylbenzene | 0.0751 | 0.1261 | -0.05 | -50.64 |
| n-Propylbenzene | 0.0704 | 0.1432 | -0.07 | -68.25 |
| 3-Ethyltoluene | 0.0754 | 0.0701 | 0.01 | 7.34 |
| 1,3,5-Trimethylbenzene | 0.1059 | 0.2325 | -0.13 | -74.84 |
| 2-Ethyltoluene | 0.1053 | 0.2072 | -0.10 | -65.23 |
| t-butylbenzene | 0.1515 | 0.2642 | -0.11 | -54.27 |
| 1,2,4-Trimethylbenzene | 0.1777 | 0.3203 | -0.14 | -57.27 |
| i-butylbenzene | 0.0000 | 0.0000 | 0.00 | N/A |
| s-butylbenzene | 0.1154 | 0.2455 | -0.13 | -72.06 |
| **n-Decane** | **0.0767** | **0.1528** | **-0.08** | **-66.30** |
| 1,2,3-Trimethylbenzene | 0.1167 | 0.2233 | -0.11 | -62.71 |
| 1,3-Diethylbenzene | 0.0883 | 0.2133 | -0.12 | -82.85 |
| 1,4-Diethylbenzene | 0.0874 | 0.2261 | -0.14 | -88.47 |
| n-butylbenzene | 0.0273 | 0.1696 | -0.14 | -144.46 |
| 1,2-diethylbenzene | 0.0729 | 0.1544 | -0.08 | -71.68 |
| **n-undecane** | **0.0000** | **0.1151** | **-0.12** | **N/A** |
| Other C4 | 0.0000 | 0.0000 | 0.00 | N/A |
| Other C5 | 0.0000 | 0.0000 | 0.00 | N/A |
| Other C6 | 0.6617 | 0.7074 | -0.05 | -6.67 |
| Other C7 | 2.7837 | 4.5832 | -1.80 | -48.85 |
| Other C8 | 3.1244 | 5.1639 | -2.04 | -49.21 |
| Other C9 | 2.7101 | 5.6391 | -2.93 | -70.16 |
| Other C10 | 1.8284 | 6.0923 | -4.26 | -107.67 |
| Other C11 | 0.0751 | 5.4074 | -5.33 | -194.52 |

| | | | |
|---|---|---|---|
| AVERAGE1 : all values | AVERAGE1 | -0.00 | -31.35 |
| AVERAGE2 : excluding methane & OTHERs | AVERAGE2 | -0.06 | -27.99 |

Table 16 - Methane Sensitivity Analysis Results

| | Methane area, % relative to Nominal Value | | | | | | |
|---|---|---|---|---|---|---|---|
| | 100 | 90 | 110 | 125 | 75 | 150 | 50 |
| C1 | 87.038 | 85.803 | 88.076 | 89.355 | 83.433 | 90.969 | 77.051 |
| C2 | 2.194 | 2.403 | 2.018 | 1.802 | 2.804 | 1.529 | 3.885 |
| C3 | 1.507 | 1.651 | 1.387 | 1.238 | 1.926 | 1.050 | 2.668 |
| C4 | 5.126 | 5.614 | 4.715 | 4.210 | 6.551 | 3.571 | 9.075 |
| C5 | 0.970 | 1.063 | 0.893 | 0.797 | 1.240 | 0.676 | 1.718 |
| C6 | 1.901 | 2.082 | 1.749 | 1.561 | 2.429 | 1.324 | 3.365 |
| C7 | 0.939 | 1.028 | 0.864 | 0.771 | 1.200 | 0.654 | 1.662 |
| C8 | 0.292 | 0.320 | 0.268 | 0.240 | 0.373 | 0.203 | 0.517 |
| C9 | 0.033 | 0.036 | 0.031 | 0.027 | 0.042 | 0.023 | 0.059 |
| C10 | 0.000 | 0.000 | 0.000 | 0.000 | 0.000 | 0.000 | 0.000 |
| C11 | 0.000 | 0.000 | 0.000 | 0.000 | 0.000 | 0.000 | 0.000 |
| TOTAL | 100.00 | 100.00 | 100.00 | 100.00 | 100.00 | 100.00 | 100.00 |

| ERRORS | | | | | | |
|---|---|---|---|---|---|---|
| C1 | -1.4% | 1.2% | 2.7% | -4.1% | 4.5% | -11.5% |
| C2 | 9.5% | -8.0% | -17.9% | 27.8% | -30.3% | 77.1% |
| C3 | 9.5% | -8.0% | -17.9% | 27.8% | -30.3% | 77.1% |
| C4 | 9.5% | -8.0% | -17.9% | 27.8% | -30.3% | 77.1% |
| C5 | 9.5% | -8.0% | -17.9% | 27.8% | -30.3% | 77.1% |
| C6 | 9.5% | -8.0% | -17.9% | 27.8% | -30.3% | 77.1% |
| C7 | 9.5% | -8.0% | -17.9% | 27.8% | -30.3% | 77.1% |
| C8 | 9.5% | -8.0% | -17.9% | 27.8% | -30.3% | 77.1% |
| C9 | 9.5% | -8.0% | -17.9% | 27.8% | -30.3% | 77.1% |
| C10 | N/A | N/A | N/A | N/A | N/A | N/A |
| C11 | N/A | N/A | N/A | N/A | N/A | N/A |
| TOTAL | 0.0% | 0.0% | 0.0% | 0.0% | 0.0% | 0.0% |

Table 17 - OIL FIELD SUMMARY - "OTHER Cn", by % Mass

| | Other C4 | Other C5 | Other C6 | Other C7 | Other C8 | Other C9 | Other C10 | Other C11 | TOTAL |
|---|---|---|---|---|---|---|---|---|---|
| OF-01 | 0.0000 | 0.0000 | 0.0000 | 2.7537 | 9.6620 | 24.3261 | 30.0711 | 10.0782 | 76.89 |
| OF-02 | 0.0000 | 0.0000 | 0.6617 | 2.7837 | 3.1244 | 2.7101 | 1.8284 | 0.0751 | 11.18 |
| OF-03 | 0.0000 | 0.0000 | 0.7074 | 4.5832 | 5.1639 | 5.6391 | 6.0923 | 5.4074 | 27.59 |
| OF-04 | 0.1460 | 0.0566 | 0.6329 | 2.6022 | 5.9405 | 10.3142 | 6.6704 | 0.3234 | 26.69 |
| OF-05 | 0.0000 | 0.0000 | 0.0000 | 0.4848 | 0.7901 | 0.8362 | 0.3693 | 0.0275 | 2.51 |
| OF-06 | 0.0000 | 0.0000 | 3.0064 | 21.5246 | 22.4750 | 19.7780 | 6.7337 | 0.0353 | 73.55 |
| Kern River Average | | | | | | | | | 36.40 |
| OF-10 | 0.5783 | 1.4612 | 2.2153 | 1.3296 | 0.7813 | 0.3196 | 0.1121 | 0.0219 | 6.82 |
| OF-11 | 6.1069 | 3.0812 | 3.3493 | 2.3796 | 1.3165 | 0.6090 | 0.1073 | 0.0068 | 16.96 |
| OF-12 | 0.0000 | 0.7107 | 3.1000 | 1.5896 | 1.0459 | 0.4462 | 0.0851 | 0.0040 | 6.98 |
| OF-13 | 5.2441 | 6.5695 | 3.6424 | 2.0599 | 0.6321 | 0.1228 | 0.0000 | 0.0000 | 18.27 |
| OF-14 | 0.0577 | 1.3404 | 1.9094 | 1.3557 | 0.6379 | 0.2824 | 0.0975 | 0.0098 | 5.69 |
| OF-15 | 13.7463 | 9.1198 | 6.4305 | 4.3198 | 0.9180 | 0.3332 | 0.0000 | 0.0000 | 34.87 |
| OF-16 | 0.0000 | 1.2993 | 6.2250 | 3.7814 | 1.9979 | 0.6220 | 0.0177 | 0.0000 | 13.94 |
| OF-17 | 2.5913 | 6.2761 | 3.0361 | 1.2699 | 0.4258 | 0.0753 | 0.0000 | 0.0000 | 13.67 |
| Elk Hills Average | | | | | | | | | 14.65 |
| OF-20 | 0.0000 | 2.8126 | 6.9258 | 3.0713 | 1.8956 | 0.7019 | 0.1335 | 0.0394 | 15.58 |
| OF-21 | 0.0000 | 0.0000 | 0.5288 | 3.6994 | 1.4513 | 0.9881 | 0.0484 | 0.0092 | 6.73 |
| OF-22 | 0.0000 | 0.6376 | 5.9315 | 2.9653 | 1.6682 | 0.6194 | 0.0776 | 0.0018 | 11.90 |
| OF-23 | 0.0000 | 0.5484 | 3.7219 | 1.0916 | 0.4752 | 0.0943 | 0.0302 | 0.0056 | 5.97 |
| OF-24 | 0.0000 | 1.6789 | 4.2202 | 3.0840 | 0.9441 | 0.1285 | 0.0331 | 0.0000 | 10.09 |
| OF-25 | 0.0000 | 1.3806 | 8.7054 | 15.5060 | 11.9369 | 6.6643 | 1.3815 | 0.3470 | 45.92 |
| OF-26 | 0.0000 | 0.0553 | 0.0935 | 0.1773 | 0.6540 | 0.8882 | 0.5560 | 0.1279 | 2.55 |
| OF-27 | 0.0000 | 0.0126 | 0.0171 | 0.0106 | 0.0655 | 0.2110 | 0.2885 | 0.0000 | 0.61 |
| Belridge Average | | | | | | | | | 12.42 |
| OF-40 | 1.1117 | 3.3706 | 1.6494 | 1.3692 | 1.3995 | 0.6859 | 0.3521 | 0.0684 | 10.01 |
| OF-41 | 0.0000 | 0.6062 | 2.0726 | 2.4995 | 5.4748 | 8.4377 | 5.1144 | 1.7402 | 25.95 |
| OF-42 | 0.0000 | 2.7335 | 2.6472 | 0.8324 | 0.0995 | 0.0106 | 0.0000 | 0.0000 | 6.32 |
| OF-43 | 0.0000 | 0.0000 | 0.0000 | 0.0000 | 5.4339 | 8.1739 | 0.0000 | 0.0000 | 13.61 |
| OF-44 | 0.0000 | 1.3944 | 9.5263 | 5.7191 | 4.5759 | 1.7149 | 1.5896 | 0.0000 | 24.52 |
| Cat Canyon Average | | | | | | | | | 16.08 |
| OF-50 | 0.0000 | 2.0335 | 2.4888 | 1.7315 | 0.9871 | 0.4512 | 0.0890 | 0.0056 | 7.79 |
| OF-51 | 0.0246 | 1.4400 | 1.2186 | 0.5669 | 0.3069 | 0.2100 | 0.0568 | 0.0000 | 3.82 |
| OF-52 | 0.0060 | 2.4045 | 3.7835 | 1.0877 | 0.5952 | 0.2615 | 0.0577 | 0.0123 | 8.21 |
| OF-53 | 0.0000 | 1.3762 | 0.9365 | 0.6074 | 0.5527 | 0.8476 | 0.3196 | 0.0092 | 4.65 |
| Ventura Average | | | | | | | | | 6.12 |
| OF-60 | 0.2737 | 0.0574 | 7.5924 | 12.3951 | 14.6463 | 13.7861 | 11.5726 | 4.6614 | 64.98 |
| OF-61 | 0.0000 | 0.3113 | 3.7219 | 2.5815 | 1.0133 | 0.2699 | 0.0440 | 0.0181 | 7.96 |
| OF-62 | 0.0000 | 0.0918 | 0.7104 | 0.5625 | 0.3413 | 0.1006 | 0.0157 | 0.0000 | 1.82 |
| OF-63 | 0.0000 | 0.9634 | 5.6426 | 5.4870 | 5.4826 | 2.7415 | 0.6598 | 0.1404 | 21.12 |
| Wilmington Average | | | | | | | | | 23.97 |
| OF-70 | 0.0000 | 0.3807 | 2.3344 | 1.7070 | 2.4206 | 1.2098 | 0.4144 | 0.0571 | 8.52 |
| OF-71 | 0.0000 | 4.2101 | 5.1428 | 5.1750 | 2.5361 | 1.0006 | 0.1483 | 0.0283 | 18.24 |
| OF-72 | 0.0000 | 1.0699 | 9.4645 | 5.3237 | 2.8911 | 1.2675 | 0.4558 | 0.0696 | 20.54 |
| OF-73 | 0.0000 | 0.1301 | 5.1712 | 3.2849 | 2.4562 | 0.6445 | 0.1150 | 0.0146 | 11.82 |
| West Coyote Average | | | | | | | | | 14.78 |
| ALL FIELD AVERAGE | | | | | | | | | 17.77 |

## Table 18 - OIL FIELD SUMMARY BY TYPE OF CRUDE

| | HEAVY | | MEDIUM | | LIGHT | |
|---|---|---|---|---|---|---|
| | AVERAGE | σ | AVERAGE | σ | AVERAGE | σ |
| Methane | 40.3306 | 39.9900 | 35.6790 | 14.7932 | 22.3296 | 18.2560 |
| Ethane | 3.1335 | 5.0954 | 7.0480 | 2.2906 | 11.4976 | 2.9810 |
| Propane | 2.6816 | 4.0563 | 13.3730 | 6.0151 | 16.8342 | 2.5576 |
| i-Butane | 1.4099 | 2.0243 | 4.2404 | 1.9756 | 3.7037 | 1.4627 |
| n-Butane | 3.4299 | 5.0578 | 10.8996 | 4.4188 | 11.4858 | 6.1301 |
| 2,2-dimethylpropane | 0.1282 | 0.1730 | 0.0576 | 0.0477 | 0.1753 | 0.2683 |
| i-Pentane | 2.8847 | 4.5520 | 4.4628 | 1.9424 | 3.2643 | 1.6812 |
| n-Pentane | 2.5220 | 4.3954 | 3.8639 | 1.2808 | 3.9830 | 2.5560 |
| 2,2-Dimethylbutane | 0.1694 | 0.2482 | 0.0934 | 0.0938 | 0.1017 | 0.0487 |
| Cyclopentane | 0.1806 | 0.3014 | 0.2860 | 0.2773 | 0.1728 | 0.1809 |
| 2,3-Dimethylbutane | 0.4154 | 0.7770 | 0.2691 | 0.4791 | 0.0953 | 0.1455 |
| 2-Methylpentane | 1.4184 | 2.0159 | 0.9545 | 0.7764 | 1.3019 | 0.3951 |
| 3-Methylpentane | 0.8937 | 1.3878 | 0.8830 | 0.5298 | 0.7929 | 0.7804 |
| n-Hexane | 1.4916 | 2.1232 | 1.4227 | 0.4918 | 2.1744 | 1.0517 |
| Methylcyclopentane | 1.4230 | 1.9021 | 1.7263 | 1.1250 | 1.8375 | 1.3330 |
| 2,4-Dimethylpentane | 0.1154 | 0.1537 | 0.0873 | 0.0603 | 0.0865 | 0.0252 |
| Benzene | 1.3177 | 3.1774 | 0.2629 | 0.2799 | 0.2950 | 0.1856 |
| Cyclohexane | 0.0482 | 0.0941 | 0.0211 | 0.0164 | 0.0144 | 0.0100 |
| 2-Methylhexane | 0.3843 | 0.4086 | 0.3014 | 0.1874 | 0.3788 | 0.1829 |
| 2,3-Dimethylpentane | 0.3743 | 0.5728 | 0.2565 | 0.1468 | 0.2214 | 0.0672 |
| 3-Methylhexane | 0.4196 | 0.6670 | 0.4470 | 0.2466 | 0.2200 | 0.2543 |
| n-Heptane | 0.8177 | 1.3746 | 0.5367 | 0.3417 | 0.7939 | 0.4691 |
| Methylcyclohexane | 0.8028 | 1.4618 | 0.7113 | 0.6985 | 0.7265 | 0.6228 |
| 2,4-Dimethylhexane | 0.2177 | 0.3263 | 0.1070 | 0.1634 | 0.0356 | 0.0542 |
| 2,3,4-Trimethylpentane | 0.2920 | 0.6669 | 0.2278 | 0.2963 | 0.0668 | 0.1047 |
| Toluene | 1.2527 | 2.8219 | 0.1943 | 0.1002 | 0.3306 | 0.2602 |
| 2,3-Dimethylhexane | 0.0579 | 0.0676 | 0.0300 | 0.0217 | 0.0233 | 0.0166 |
| 2-Methylheptane | 0.1747 | 0.2636 | 0.1206 | 0.1250 | 0.0943 | 0.1876 |
| 3-Ethylhexane | 0.2368 | 0.2842 | 0.0928 | 0.0876 | 0.0794 | 0.0719 |
| n-Octane | 1.0096 | 1.0595 | 0.2069 | 0.1473 | 0.2415 | 0.1326 |
| Ethylbenzene | 0.8447 | 1.1022 | 0.1289 | 0.0737 | 0.0939 | 0.0534 |
| p-Xylene | 0.4054 | 1.1508 | 0.1054 | 0.1068 | 0.0216 | 0.0210 |
| m-Xylene | 0.2678 | 0.4639 | 0.0546 | 0.0429 | 0.1127 | 0.0849 |
| o-Xylene | 0.5411 | 1.0675 | 0.0541 | 0.0344 | 0.0400 | 0.0329 |
| n-Nonane | 0.5212 | 1.0144 | 0.0601 | 0.0515 | 0.0652 | 0.0504 |
| i-Propylbenzene | 0.0739 | 0.1086 | 0.0041 | 0.0040 | 0.0029 | 0.0031 |
| n-Propylbenzene | 0.1692 | 0.2054 | 0.0197 | 0.0161 | 0.0176 | 0.0128 |
| 3-Ethyltoluene | 0.1576 | 0.1963 | 0.0097 | 0.0088 | 0.0051 | 0.0055 |
| 1,3,5-Trimethylbenzene | 0.1714 | 0.3033 | 0.0089 | 0.0150 | 0.0083 | 0.0111 |
| 2-Ethyltoluene | 0.1710 | 0.2772 | 0.0121 | 0.0142 | 0.0070 | 0.0108 |
| t-butylbenzene | 0.2062 | 0.3513 | 0.0079 | 0.0083 | 0.0045 | 0.0066 |
| 1,2,4-Trimethylbenzene | 0.5156 | 1.1864 | 0.0105 | 0.0118 | 0.0099 | 0.0161 |
| i-butylbenzene | 0.0888 | 0.1961 | 0.0016 | 0.0036 | 0.0012 | 0.0026 |
| s-butylbenzene | 0.1747 | 0.3680 | 0.0032 | 0.0053 | 0.0024 | 0.0034 |
| n-Decane | 0.1078 | 0.2289 | 0.0161 | 0.0244 | 0.0061 | 0.0078 |
| 1,2,3-Trimethylbenzene | 0.1848 | 0.3104 | 0.0090 | 0.0146 | 0.0011 | 0.0024 |
| 1,3-Diethylbenzene | 0.1971 | 0.3609 | 0.0027 | 0.0067 | 0.0026 | 0.0057 |
| 1,4-Diethylbenzene | 0.1658 | 0.3163 | 0.0022 | 0.0043 | 0.0008 | 0.0019 |
| n-butylbenzene | 0.1157 | 0.2629 | 0.0027 | 0.0051 | 0.0027 | 0.0038 |
| 1,2-diethylbenzene | 0.1157 | 0.2365 | 0.0004 | 0.0012 | 0.0076 | 0.0170 |
| n-undecane | 0.1158 | 0.3117 | 0.0028 | 0.0057 | 0.0018 | 0.0041 |
| Other C4 | 0.0851 | 0.2659 | 0.5817 | 1.6110 | 3.8096 | 5.9979 |
| Other C5 | 0.6130 | 1.0097 | 1.7962 | 1.5924 | 3.9684 | 3.7846 |
| Other C6 | 2.6326 | 3.1626 | 3.8962 | 2.1408 | 3.8874 | 2.7817 |
| Other C7 | 4.5485 | 5.9753 | 2.3109 | 1.4970 | 2.9012 | 1.2015 |
| Other C8 | 5.4600 | 5.9669 | 1.3375 | 0.8678 | 1.1070 | 0.5526 |
| Other C9 | 5.9605 | 7.1701 | 0.5505 | 0.3784 | 0.4857 | 0.3519 |
| Other C10 | 4.0744 | 7.2816 | 0.1325 | 0.1391 | 0.0559 | 0.0593 |
| Other C11 | 1.2806 | 2.7259 | 0.0148 | 0.0207 | 0.0117 | 0.0162 |

III. References Cited

1. Oliver, Karen D., Joachim D. Pleil, *Atmos. Environ.*, **20**, 1403-1411 (1983)
2. Castronovo, Cynthia L., "Determination of Hydrocarbon Emissions From Oil Field Production Sumps", California Air Resources Board, Stationary Source Division, ARB/SS-87-05, December 1986
3. Measurement of Gaseous Emission Rates From Land Surfaces Using an Emission Isolation Flux Chamber -User's Guide", U.S. Environmental Protection Agency, Environmental Monitoring Systems Laboratory, Las Vegas (February 1986)

Other References

1 Compendium of Methods for the Determination of Toxic Organic Compounds in Ambient Air, U.S. Environmental Protection Agency, Environmental Monitoring Systems Laboratory, Research Triangle Park, NC 27711
2. Procedures for the Sampling and Analysis of Atmospheric Toxic Compounds, California Air Resources Board, Haagen-Smit Laboratory Division

APPENDIX A - Key Personnel Contacts

| Name | Company | Telephone |
|---|---|---|
| Ron James, Div. Supt. | Union Oil | (805) 543-3108 |
| Steven Woodruff | Chevron | (805) 395-6312 |
| Steven Zeeman | Chevron | (415) 842-0025 |
| Michael Rutledge | Texaco | (805) 762-7331 |
| Fred Hagist, Env. Spec. | Kern River | (805) 399-2961 |
| Mark Shimarian | THUMS Long Beach Co. | (213) 436-9211 |
| Jack Caufield | Bechtel | (805) 763-6632 |
| Darryl Gunderson | Shell | (805) 326-5279 |
| Sam Duran | Texaco | (805) 648-8243 |

# APPENDIX B - PHOTOGRAPHS OF SELECTED SAMPLING SITES

**Key for Oil Field Photos**

1. bagged valve sampling
   Kern River

2. tank roof hatch sampling
   Kern River

3. Teflon bag buffer
   Belridge

4. casing valve sampling
   Belridge

5. production header
   Belridge

6. vapor recovery compressor
   Elk Hills

7. sump sampler
   Cat Canyon

8. sump sampler
   Cat Canyon

9. sump cover
   Wilmington

10. sump sampling
    Wilmington

11. flux box on sump
    Wilmington

12. casing valve
    Wilmington

tank roof hatch sampling
Kern River

casing valve sampling
Belridge

bagged valve sampling
Kern River

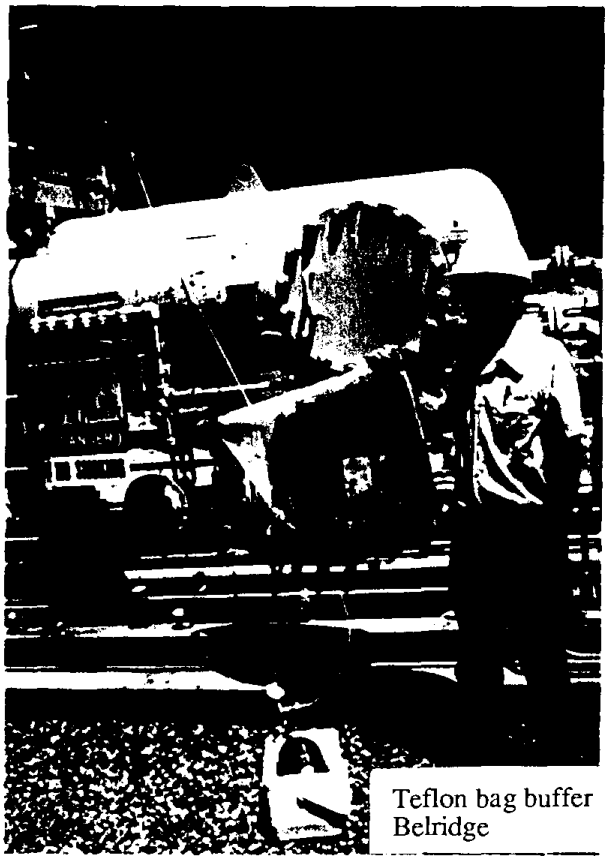

Teflon bag buffer
Belridge

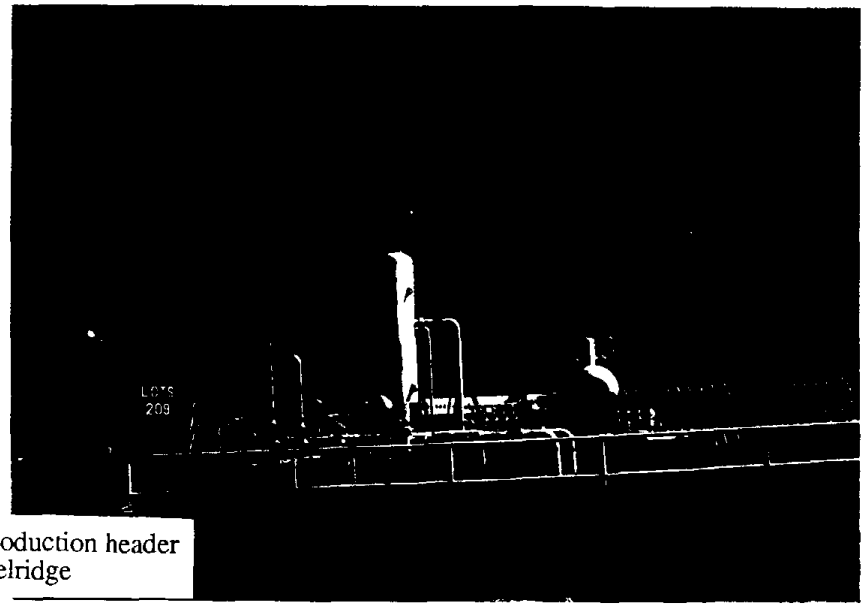

production header
Belridge

vapor recovery compressor
Elk Hills

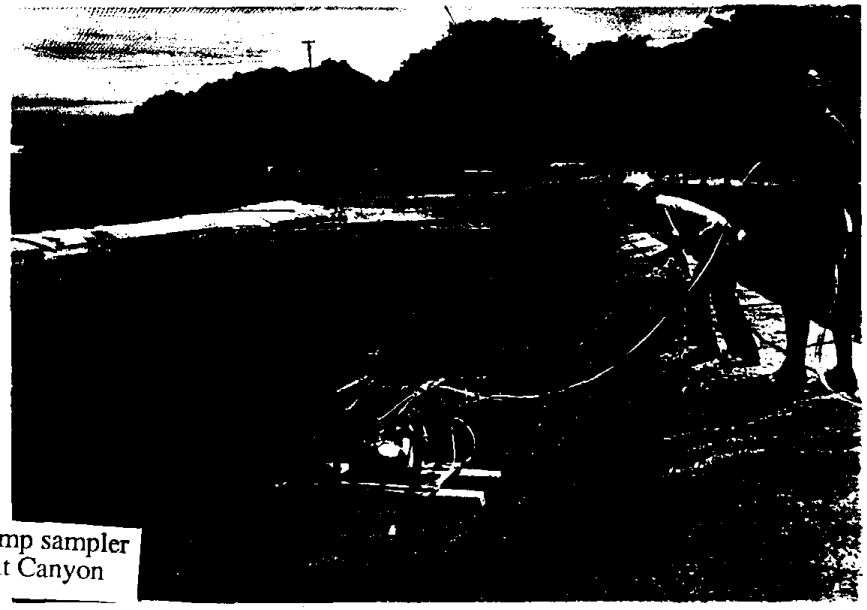

sump sampler
Cat Canyon

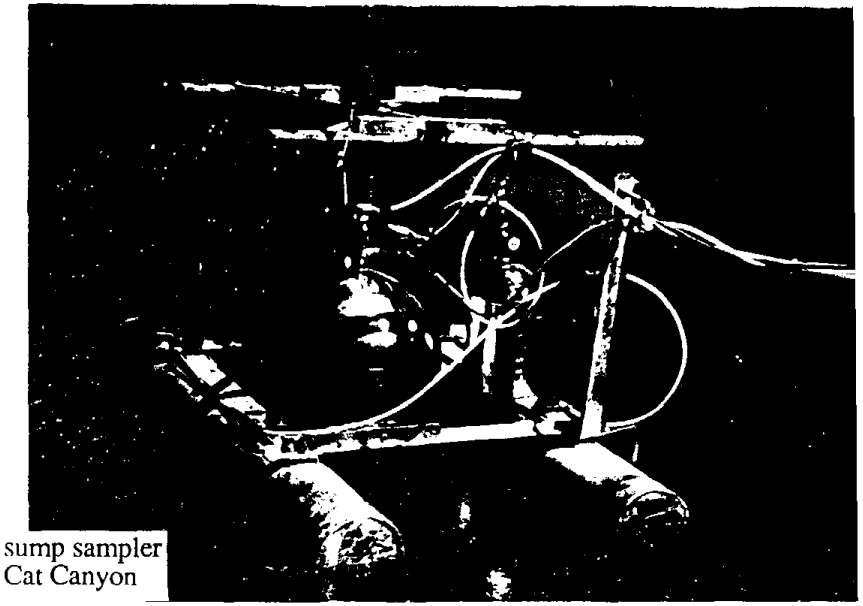

sump sampler
Cat Canyon

sump cover
Wilmington

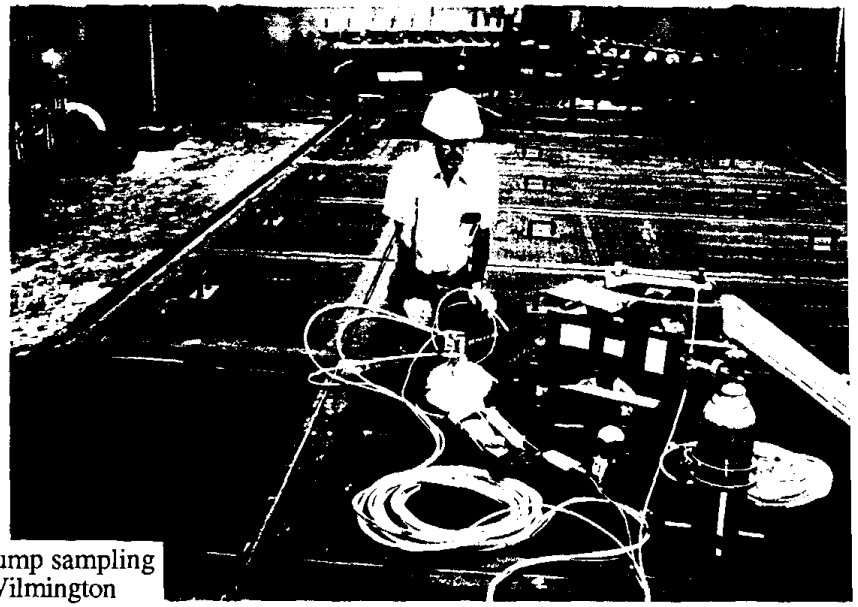

sump sampling
Wilmington

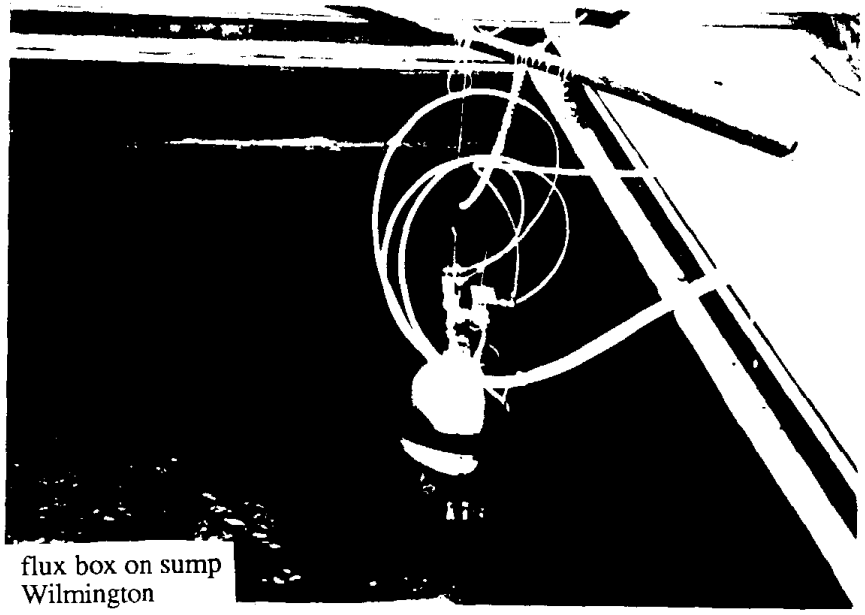

flux box on sump
Wilmington

casing valve
Wilmington

APPENDIX C -Protocol for Sampling Fugitive Emissions from Oil Production Facilities

1. Applicability

1.1 The procedures described herein will be applied to sampling fugitive hydrocarbon emissions from a variety of sources found in California oil production fields.

1.2 Sources to be tested by this procedure will have been screened for positive leakage by a soap bubble test (if applicable), and screened for positive hydrocarbon content by a portable hydrocarbon analyzer (OVA 128 or Gastech Analyzer).

2. Method

2.1 Leaking components will be isolated by a Teflon shroud.

2.2 Emissions will be collected in evacuated, passivated stainless steel canisters.

2.2.1 If component leak rate is high, emissions filling the shroud will be collected directly.

2.2.2 If component leak rate is low, zero air will be permitted to flow into the shroud, and diluted emissions at the shroud outlet will be collected as above.

2.3 Sumps and pits will have a portion of their surface isolated by a flux chamber.

2.4 Zero air will be permitted to enter the chamber and mix with the emissions.

2.5 The diluted emissions at the chamber outlet will be collected in evacuated stainless steel canisters.

2.6 The headspace of storage tanks will be accessed via roof hatches.

2.7 Tank headspace will be collected in evacuated stainless steel canisters.

2.8 Analysis will be performed, using gas chromatography, with flame ionization or mass spectrometric detection, as appropriate.

3. Components

3.1 A cylinder of zero air, containing less than 0.1 PPM hydrocarbons.

3.1.1 A size 3 cylinder (6" x 10", 30 $ft^3$ @ 2000 PSIG) of Ultra Zero Air, from Matheson, Cucamonga, CA.

3.1.2 A non-contaminating manual central valve, #4351, CGA 590 from Matheson, Cucamonga, CA.

3.2 Teflon bags, various sizes from 3 liter to 20 liters, from Berghof, Inc. , Concord, CA.

3.3 A rotameter to monitor flow of zero air, from Ace Glass, Vineland, NJ.

3.4 Adhesive tapes in a variety of widths.

3.5 SUMMA-passivated stainless steel canisters, 3.2 liter.

3.6 Stainless steel or other inert flux chamber.

3.7 Combination pressure-vacuum gauge for field check of canister pressure.

3.8 Teflon tubing, for use in sampling lines, Berghof, Concord, CA.

4. Procedure

4.1 The leaking component is isolated, a Teflon bag of appropriate size, sealed with tape or an elastic band.

4.1.1 The shroud is leak-checked by inflation with zero air. Leaking seams are identified and repaired.

4.1.2 The contents of the shroud are expelled by compression of the Teflon bag.

4.1.3 If the component leak rate is high, the shroud will re-inflate.

4.1.4 Perform another empty/fill cycle.

4.1.5 Complete sample ID sheet with component description, and canister number.

4.1.6 Attach vacuum gauge to sampling canister, open canister valve just long enough to note and record pressure.

4.1.7 Attach sampling canister to shroud exit part.

4.1.8 When shroud is fully inflated, slowly open canister valve, and allow sample to fill canister.

4.1.9 When canister contents are at atmospheric pressure, close canister valve and remove canister from shroud.

4.1.10 If component leak rate is low, fill shroud by metering in zero air at no more than 500 mL/min. Allow at least 3 shroud volumes of air to flow before sampling as above.

4.2 For sumps and pits, place emission isolation chamber on surface.

4.2.1 Meter in zero air at 2-5 liters/min. Allow at least 3 chamber volumes of air to flow before sampling.

4.2.2 Perform canister pressure check as in 4.1.6.

4.2.3 Attach canister to chamber outlet port, and slowly open canister valve.

4.2.4 When canister contents are at atmospheric pressure, close canister valve and remove canister.

4.3 For storage tanks, locate access hatch.

4.3.1 Perform canister pressure check as in 4.1.6.

4.3.2 Attach 1/4" O.D. stainless steel sampling probe to canister.

4.3.3 Open access hatch enough to insert probe well into tank headspace.

4.3.4 Open canister valve, and allow sample to fill canister.

4.3.5 When canister contents are at atmospheric pressure, close canister valve, withdraw sampling probe and close hatch.

# APPENDIX D - ANALYTICAL METHODOLOGY AND CALIBRATION

# 5. ANALYTICAL METHODOLOGY AND CALIBRATION

## 5.1 Introduction to Analytical Methodology

Environmental Analytical Service, Inc. (EAS) performed the chemical analysis of diluted engine exhaust and bagged component samples using dedicated gas chromatographs (GC) equipped with flame ionization detectors (FID). The FID provides maximum sensitivity for hydrocarbons and has a selective response to hydrocarbon atoms. With proper gas chromatographic separation methods, the concentration of components in complex mixtures can be accurately determined. A GC equipped with a mass spectrometer detector (MSD) was used for confirmation of compound identities in collected samples. These methods provided complete compound speciation for all photochemically reactive organic compounds (PROC) as described in the EPA document Guidance for the Collection and use of Ambient Hydrocarbon Species Data in Development of Ozone Control Strategies (Singh, 1980). The following sections describe the analytical methods EAS used for the fugitive emissions study.

### 5.1.1 Analysis of Methane

Methane in the collected samples was analyzed using a Carle AGC 100 isothermal gas chromatograph. The methane was separated from air and CO using a 6' Molecular Sieve 5A Column at 50 °C. The helium carrier gas flow rate used was 30 mL/min. Air pressure was maintained at 16 psig and hydrogen pressure at 22 psig, as recommended by the manufacturer. A 2.0 mL sampling loop was used to measure the sample size. The sample loop was kept in a thermostated oven to maintain constant volume. The peaks were integrated using a HP 3393A computing integrator which directly calculated the methane concentration in ppmC. The relative precision for methane at 1,725 ppbvC is 0.2 to 0.4%. The response has been demonstrated to be linear to 20 ppmvC.

### 5.1.2 Light Hydrocarbon Analysis (C2 to C4) at Low Concentrations

The light hydrocarbons were analyzed using a GC/FID packed column procedure. The column and procedure used for analysis is recommended by EPA and described in California Air Resources Board Method 104. The column used was 1/8" by 10' stainless steel packed with phenyl-isocyanate on Durapack 80/100 mesh. The gas chromatograph used was an HP 5890 with a Model HP3393A computing integrator equipped with chart readout. A 100 to 500 mL gas sample was concentrated using a glass bead freezeout loop procedure. The column was operated isothermally at 28 °C.

A diagram for the instrumental set-up for light hydrocarbon analysis is shown in Figure 5.1.1. The sample canister is connected to a counterflow dryer made of Nafion tubing. The dryer removes water vapor from the sample before analysis. The sample loop is immersed in a Dewar flask filled with liquid oxygen, which traps out hydrocarbons from C2 to C10 quantitatively. The sample is pulled through the glass bead freezeout loop by vacuum. The volume of sample was determined by measuring the pressure drop in a 1.2 liter canister. A precision vacuum test gauge was used to measure the pressure change from which the volume of sample can be calculated (see Section 6.3.3). The system can be used to accurately measure a sample size of 100 to 500 mL.

Once the constituents are trapped, the six port valve is switched from <load> to <analyze>, and the freezeout loop is placed in 80 °C water to thermally desorb the hydrocarbons. The desorbed compounds flow to a 1/8" by 10' stainless steel column packed with phenylisocyanate on Durapack 80/100 mesh. Analysis is performed isothermally at 28 °C. The column flow is controlled by column head pressure and is maintained at 20 psig to give a flow of 40 mL/min. The hydrocarbons are analyzed on a FID detector. The operating conditions are summarized in Table 5.1.

## 5.1 LIGHT HYDROCARBON ANALYSIS SETUP

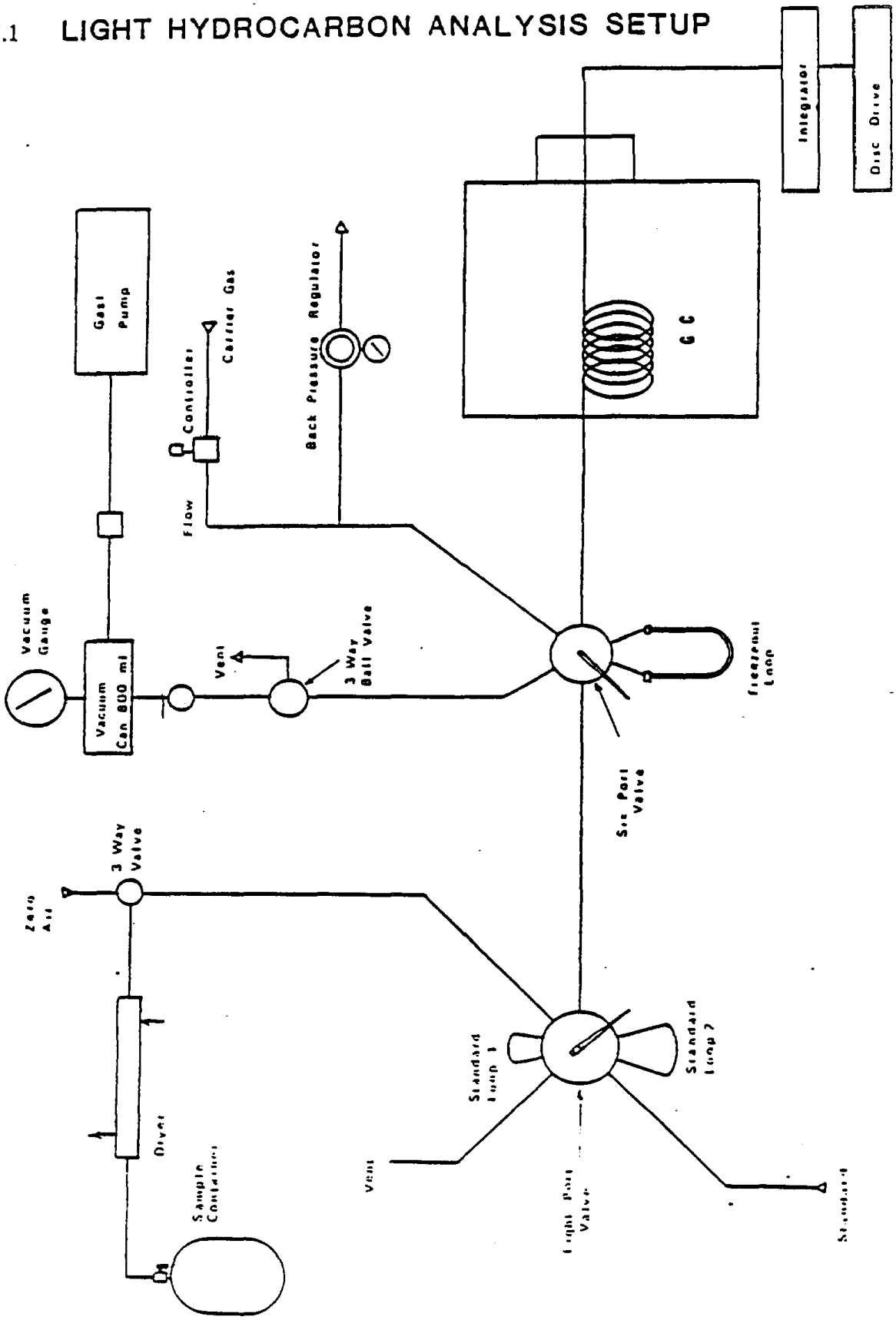

TABLE 5.1

## OPERATING CONDITIONS

**METHANE -**

Flows -
- Helium 30 ml/min
- Hydrogen 30 ml/min

Gas Pressures -
- Helium (Column Pressure) 40 psig
- Hydrogen (Flame) 24 psig
- Air (Flame) 15 psig

Temperature Program - 50 C
Detector Temperature - 150 C
Sample Size - 1.0 ml

**LIGHT HYDROCARBONS -**

Flows -
- Helium 29 ml/min
- Hydrogen 31 ml/min
- Air 340 ml/min

Gas Pressures -
- Helium (Column Pressure) 40 psig
- Hydrogen (Flame) 17.5 psig
- Air (Flame) 34 psig

Temperature Program - 30 C
Detector Temperature - 250 C
Sample Size - 500 ml

**HEAVY HYDROCARBONS -**

Flows -
- Air 420 ml/min
- Nitrogen 43 ml/min

Gas Pressures -
- Hydrogen (Column Pressure) 7 psig
- Hydrogen (Flame) 17 psig
- Air (Flame) 35 psig
- Nitrogen (Make-up Gas) 30 psig

Temperature Program- -20C for 2 min, Program Rate 6 C/min
Detector Temperature - 275 C
Sample Size - 500 ml

The peak areas were integrated using an HP 3393A computing integrator with chart recorder. The charts were examined to verify proper system operation and chromatographic resolution. The integrated data were used to calculate the concentration of the constituents. These results were compared with standard runs, and quantified against a commercial propane standard that is traceable to NBS standards (see Section 5.4.2). Response factors of hydrocarbons other than propane are based on carbon number and checked experimentally and against literature values (Dietz, 1967). Hard copies of the chromatograms, and integrated data are EAS proprietary materials which are stored permanently at the laboratory for a five year period. These materials are available for inspection by the client at the EAS laboratory and are not released in copy form to the client.

Analysis of Light Hydrocarbons (C2 to C6) at High Concentrations.

Some light hydrocarbons from bagged component samples were present at high concentrations. These samples were analyzed on the Carle AGC 100 GC using a 1/8" x 30' column containing 23 % SP-1700 on 80/100 Chromosorb PAW operating at 75 °C, isothermal. A 1.0 mL sample loop with backflush was used for direct injection. Concentrations in the 0.1 percent to 100 percent range were measured using a thermal conductivity detector (TCD). The precision for this method at 5 percent concentration is 0.5 percent. For concentrations in the 1 to 1000 ppmvC range, a FID was used. The precision at 9.5 ppmv is 1.0 percent. EAS maintains a complete line of commercial light hydrocarbon standards spanning the range of 10 ppmv to 10 percent. The results were integrated using an HP 3393A integrator and the concentrations of the individual hydrocarbons were determined by transferring the integrated areas into a HP 150 computer using a LOTUS 1-2-3 spreadsheet.

5.1.3 Heavy hydrocarbon and Oxygenates Analysis (C5 to C10)

The heavy hydrocarbons and oxygenates (aldehydes and ketones) were analyzed using an HP 5890 with a fused silica capillary column. This method was described in Sing (1980). This publication describes the use of a canister-based system in conjunction with a freezeout loop for the analysis of sub-par billion hydrocarbons and stable oxygenates. The analysis procedure is similar to that used by Westburg (1984) and Rasmussen (1987). The capillary column provides the required resolution to separately identify the individual reactive organic compounds. Major components that cannot be identified using FID were analyzed for confirmation on an HP 5890/5970 GC/MSD system as described in EPA Method TO-14. A diagram for the instrumental set-up is shown in Figure 5.1.2. The heavy hydrocarbons are analyzed by passing the sample through a Nafion dryer into the 8" glass bead freezeout loop immersed in liquid oxygen. The components are desorbed into a fused silica cryofocussing loop with 80 °C hot water. They are then desorbed from the cryofocus loop and the components are separated using a 100-meter 0.25-micron fused silica capillary column with a 0.5-micron coating. The column is programmed from -20 °C to 200 °C at 3 °C/min. Total analysis time is 60 minutes The method detection limit for this method is about 0.1 ppbvC for most compounds and the analytical precision at 10 ppbvC is 5 percent. The compounds are detected on a FID set to operate at high sensitivity A detailed description of the analytical procedure is given in section 5.2.3. Chromatograms were integrated using an HP 3393A computing integrator and stored on a HP 9114 disk drive for reintegration or further examination if required at a later date. Compounds were calibrated using an NBS-traceable propane/hexane/ benzene standard. On the FID, hydrocarbons have a uniform response based on the number of carbon atoms. Data from the integrator were entered into a LOTUS 1-2-3 spreadsheet to generate the final report.

5.2

# HEAVY HYDROCARBON ANALYSIS SETUP

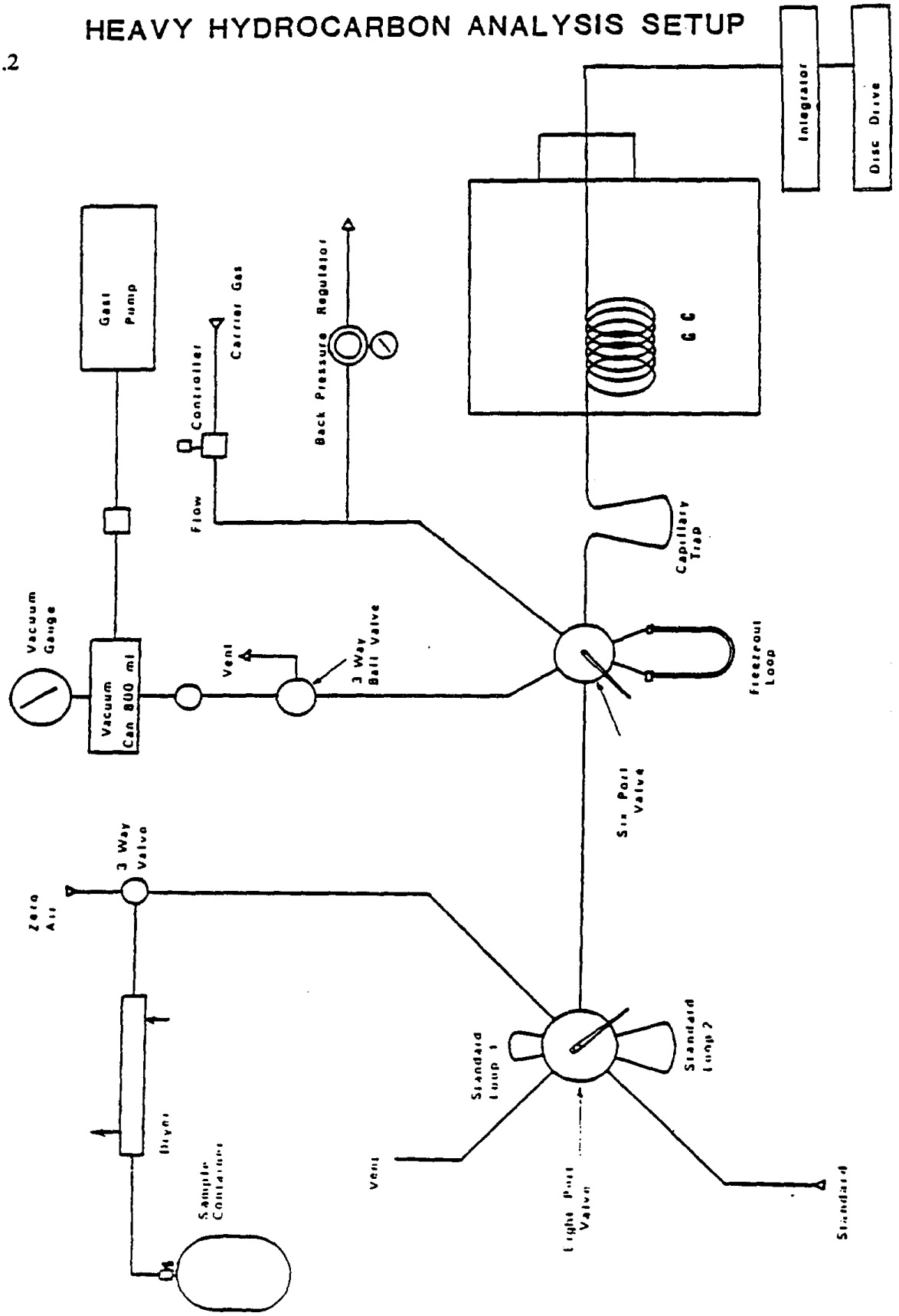

5.1.4 Compound Analysis and Identification

The GC/MS method (EPA Method TO-14) uses a cryotrapping system and a high resolution capillary column to analyze for volatile organic compounds.

A diagram of the analytical system, with an HP 5970 MSD for the detector, is shown in Figure 5.1.3 . A 100 to 1000 mL gaseous sample is introduced from the air sampling canister through a Nafion dryer to the freezeout loop. The freezeout loop is immersed in liquid oxygen and concentrates the air sample. After the sample is loaded, it is cryofocussed onto the beginning of a 30 meter fused silica capillary column. The cryofocused loop is then warmed and the compounds are separated and enter the mass spectrometer. The GC/MS has a complete data system capable of collecting, storing, and interpreting the data collected. The GC/MS is tuned and operated according to the specifications outlined in EPA SW 846 Test Methods. Compounds were calibrated by the external standard procedure using a NBS traceable Scott-Marrin air standards. The relative standard deviation of the method is 20% at 5 ppbv and the MDL is 0.5 ppbv for most compounds.

5.1.5 Permanent Gases (Nitrogen, Oxygen, Carbon Dioxide, Methane)

The permanent gases were analyzed by a SCAQMD method using a GC with a thermal conductivity detector and a FID on a Molecular Sieve 5A column a Poropak Q/N column mix. the system uses a 1 mL sample loop and is set-up with column backflush and bypassing to simultaneously measure the Carbon Dioxide and other fixed gases. The instrument is run isothermally at $70^{o}$ C with helium carrier gas and has a detection limit of 0.05%. For low levels of Carbon Dioxide a catalyst is used to convert the Carbon Dioxide to Methane for analysis.

5.1.6 Aldehydes by the DNPH method

The C1 to C4 aldehydes were analyzed by a modification of EPA Method TO5. This method is based on the reaction of low molecular weight aldehydes and ketones with 2,4-dinitrophenylhydrazine to form stable derivatives. The source gases were sampled using midget impingers filled with acidified DNPH in acetonitrile. An aliquot of the impinger contents was analyzed using high performance liquid chromatography. The analytical column used was a Supelcosil LC18 reverse phase type, with a Supelco guard column. The system was run isocratically, using 70% methanol / 30% water as the eluant. The sample, typically 15 microliters, was injected with a Pressure-Lok syringe. The aldehydes were detected using a UV-visible detector operating at a wavelength of 360 nm, and quantified using an HP 3393A computing integrator.

5.2 Analytical Standard Operating Procedures

5.2.1 Methane Analysis

1. Standards

This procedure is used to load standards at high concentrations (5 ppmv) and have them diluted using calibrated loops to give GC responses equivalent to ambient concentrations. Dilution is 1/1000 with an uncertainty of less than 5%.

a. Set system to operating parameters given in Table 5.1.b.

b. Light FID, and place sample valve in load position.

FIGURE 5.1.3

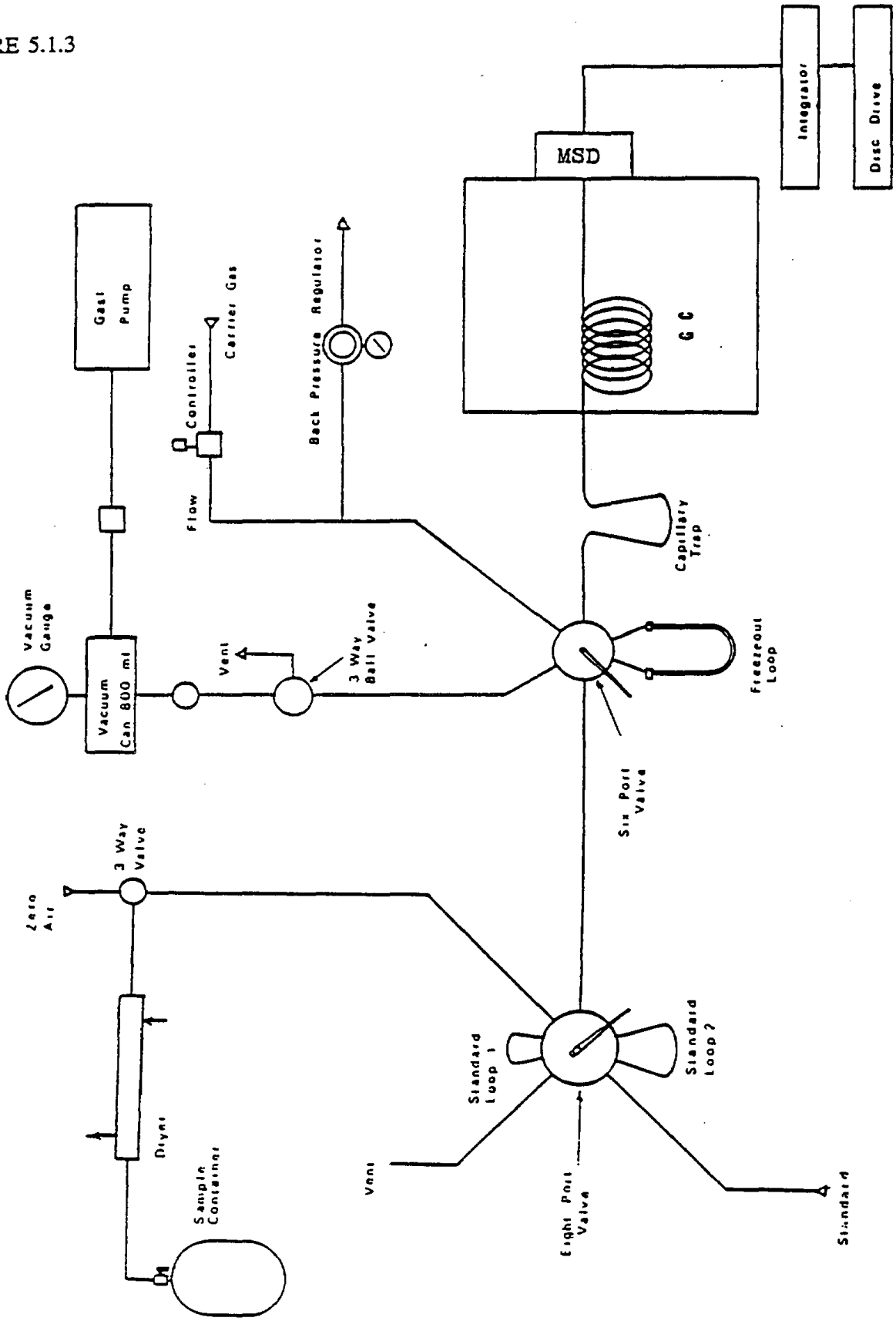
Integrator
Disc Drive
MSD
G C
Gast Pump
Carrier Gas
Controller
Back Pressure Regulator
Flow
Capillary Trap
Vacuum Gauge
Vacuum Can 800 ml
Vent
3 Way Ball Valve
Freezeout Loop
Six Port Valve
3 Way Valve
Zero Air
Dryer
Sample Container
Standard Loop 1
Standard Loop 2
Vent
Eight Port Valve
Standard

c. Connect standard cylinder to sampling line.

d. Open valve on standard cylinder and let bubble for 3 seconds to flush loop. Close valve.

e. Rotate sample valve to inject position, start integrator.

f. At end of run turn sample valve to load position.

g. Disconnect standard cylinder.

2. Ambient Air Samples

This procedure can be used to load low pressure samples in stainless steel sample canisters, and to load low pressure standards at simulated ambient concentrations.

a. Set system to operating parameters given in Table 5.1.b.

b. Light FID, turn sample valve to load position.

c. Connect sample canister to sampling line.

d. Open valve on sample canister, and let bubble for 3 seconds to flush loop. Close valve.

e. Turn sample valve to inject, and start integrator.

f. At the end of the run, turn sample valve to load.

g. Disconnect sample canister from sample intake line, record can pressure, place cap on sample canister, and place on table for light hydrocarbon analysis.

5.2.2 Light Hydrocarbon Analysis

This procedure is used to load standards at high concentrations (5 ppmv) and have them diluted using calibrated loops to give GC responses equivalent to ambient concentrations. Dilution is 1/1000 with an uncertainty of less than 5%.

a. Set system to operating parameters given in Table 6.1.b.

b. Light FID, turn on vacuum pump, turn on hot water, pour one Dewar of liquid oxygen, and place sample valve in the load position.

c. Open vacuum valve and evacuate volume measuring canister to 22.0".

d. Turn air sampling valve to zero air position.

e. Connect standard input line of 6 port standard valve to standard cylinder. Set regulator on standard cylinder to 10 psig. Open regulator valve.

f. Flush sample loop with zero air by opening intake valve and turning selector to vacuum. After a drop of 2" vacuum turn standard valve to load position. Turn selector to off and close intake valve. Re-evacuate volume measuring canister to 22".

g. Place freezeout loop in liquid oxygen Dewar.

h. Open valve on standard cylinder and let bubble for 3 seconds to flush loop. Close valve.

i. Rotate standard valve to inject position, turn selector to vacuum.

j. Let pressure rise until it reaches 10". This corresponds to a zero air volume of 500 mL.

k. Close intake valve first then turn selector to off. Close valve on sample can.

l. Turn sample valve to inject, remove liquid oxygen and immediately place freezeout loop in hot water bath and start integrator.

m. At end of run, turn sample valve to load position and remove hot water bath.

n. Turn regulator on standard cylinder off, and close regulator valve. Disconnect standard cylinder.

2. Ambient Air Samples

This procedure can be used to load low pressure samples in stainless steel sample canisters, and to load low pressure standards at simulated ambient concentrations.

a. Set system to operating parameters given in Table 5.1.b.

b. Light FID, turn on vacuum pump, turn on hot water, pour a Dewar of liquid oxygen, and place sample valve in the load position. Turn sampling line open to sample position.

c. Open vacuum valve and evacuate volume measuring canister to 22.0".

d. Connect sample canister to intake line.

e. Open intake valve and turn selector to vacuum and flush system and glass bead freezeout loop to 22" vacuum.

f. Close intake valve, and turn selector to off. Re-evacuate volume measuring canister to 22.0". Flush system with small amount of sample by opening selector valve and sample canister and re-evacuate volume measuring canister to 22.0".

g. Place freezeout loop in liquid oxygen Dewar.

h. Open valve on sample canister.

i. Turn selector to vacuum and open intake valve. Let pressure rise in volume measuring canister until it reaches 10". This corresponds to a sample size of 500 mL.

j. Close intake valve first then turn selector to off. Close valve on sample canister.

k. Turn sample valve to inject, remove liquid oxygen Dewar replace with hot water bath, and start integrator.

l. At end of run turn sample valve to inject position, and remove hot water bath.

m. Disconnect sample canister from sample intake line, record can pressure, place cap on sample canister, and place on table for heavy hydrocarbon analysis.

5.2.3 Heavy Hydrocarbon Analysis

1. Hydrocarbon Standards

This procedure is used to load standards at high concentrations (5 ppmv) and have them diluted using calibrated loops to give GC responses equivalent to ambient concentrations. Dilution is 1/1000 with an uncertainty of less than 5%.

a. Set system to operating parameters given in Table 5.1.b.

b. Light FID, turn on vacuum pump, turn on hot water, pour two Dewars of liquid oxygen, and place sample valve in the load position.

c. Open vacuum valve and evacuate volume measuring canister to 24.5".

d. Turn intake valve to "zero air" position.

e. Connect standard input line of 8 port standard valve to standard cylinder. Set regulator on standard cylinder to 10 psig. Open regulator valve.

f. Flush both sample loops with zero air by opening intake valve and turning selector to vacuum. After a drop of 2" vacuum turn standard valve to flush other loop. After an additional 2" vacuum drop turn selector to off and close intake valve. Leave standard valve in position for desired loop size. Re-evacuate volume measuring canister to 24.5".

g. Open valve on standard cylinder and let bubble for 3 seconds to flush loop. Close valve.

h. Place freezeout loop in liquid oxygen Dewar.

i. Rotate standard valve and turn selector to vacuum.

j. Let pressure rise until it reaches 14". This corresponds to a zero air volume of 500 mL.

k. Turn selector to off. Close valve on standard cylinder.

l. Place capillary loop in liquid oxygen Dewar.

m. Set timer for 2.5 min, and turn sample valve to inject.

n. Remove liquid oxygen and place freezeout loop in hot water bath. Start timer.

o. At 1.5 min set initial oven temperature to -20° C.

p. After 2.5 min and oven temperature of -20° C, turn sample valve to load position, start integrator, and simultaneously pull out capillary loop.

q. Remove hot water from freezeout loop.

r. Turn cryo valve off at 25° C. CLEAR. ENTER OFF.

s. Disconnect standard cylinder. Turn regulator on standard cylinder off, and close regulator valve.

2. Ambient Air Standards

This procedure can be used to load low pressure samples in stainless steel sample canisters, and to load low pressure standards at simulated ambient concentrations.

a. Set system to operating parameters given in Table 5.1.b.

b. Light FID, turn on vacuum pump, turn on hot water, pour two Dewars of liquid oxygen, and place sample valve in the load position.

c. Open vacuum valve and evacuate volume measuring canister to 24.0".

d. Turn intake valve to "sample" position.

e. Open intake valve and turn selector to vacuum and flush system and glass bead freezeout loop to 22" vacuum.

f. Close intake valve, and turn selector off. Re-evacuate volume measuring canister to 24.5".

g. Flush system with a small amount of sample by turning selector to vacuum, open sample canister and let pressure rise to 22". Close sample canister, and turn selector to off. Re-evacuate volume measuring canister to 24.5".

h. Place freezeout loop in liquid oxygen Dewar.

i. Open valve on sample canister.

j. Turn selector to vacuum and let pressure rise in volume measuring canister until it reaches 14". This corresponds to a sample size of 500 mL.

k. Turn selector to off. Close valve on sample canister.

l. Place capillary loop in liquid oxygen Dewar.

m. Set timer for 2.5 min, and turn sample valve to inject.

n. Remove liquid oxygen, place freezeout loop in hot water bath and simultaneously start timer.

o. At 1.5 min set initial oven temperature to -20° C.

p. After 2.5 min and oven temperature of -20° C, turn sample valve to load position, start integrator, and simultaneously pull our freezeout loop.

q. Remove hot water from freezeout loop.

r. Turn cryo valve off at 25° C. CLEAR. ENTER OFF.

s. Disconnect sample canister from sample intake line, record can pressure, place cap on sample canister, and place on temporary storage shelf.

5.2.4 Attachment 1 Compounds by GC/MS

1. Standards

This procedure is used to load standards at high concentrations (5 ppmv) and have them diluted using calibrated loops to give GC responses equivalent to ambient concentrations. Dilution is 1/500 with an uncertainty of less then 5%.

a. Set system to operating parameters.

b. Turn on vacuum pump, turn on hot water, and pour two Dewars of liquid oxygen, and place Sample Valve in the load position.

c. Open Vacuum Valve and evacuate Volume Measuring Canister to 24.5".

d. Turn Intake Valve to "aero air" position.

e. Connect Standard Input Line of 8 port Standard Valve to standard cylinder. Set regulator on standard cylinder to 10 psig. Open regulator valve.

f. Flush both sample loops with zero air by opening Intake Valve and turning Selector to vacuum. After a drop of 2" vacuum turn standard valve to flush other loop. After an additional 2" vacuum drop turn Selector to off and close Intake Valve. Leave Standard Valve in position for desired loop size. Re-evacuate Volume Measuring Canister to 24.5".

g. Open valve on standard cylinder and let bubble for 3 seconds to flush loop. Close valve.

h. Place freezeout loop in liquid oxygen Dewar.

i. Rotate Standard Valve and turn Selector to vacuum.

j. Let pressure rise until it reaches 14". This corresponds to a zero air volume of 500 mL.

k. Turn Selector to off. Close valve on standard cylinder.

l. Place capillary loop in liquid oxygen Dewar.

m. Set timer for 2.5 min, and turn Sample Valve to inject.

n. Remove Liquid Oxygen and place freezeout loop in hot water bath. Start timer.

o. On GC/MS computer enter the data acquisition program and set up data collection file for standard. Standard files are formatted as: S (Days Date) (Last digit of year) A (Run Number). D Turn on cryo option, and enter the Prepare To Inject Program.

p. After 2.5 min and oven temperature of -20° C, turn Sample Valve to load position, hit the GO softkey on the computer, and simultaneously pull out capillary loop.

q. Remove hot water from Freezeout loop.

r. Turn cryo valve off at 25° C. CLEAR. ENTER OFF.

s. Disconnect standard cylinder. Turn regulator on standard cylinder off, and close regulator valve.

2. Ambient Air Standards

This procedure can be used to load low pressure samples in stainless steel sample containers, and to load low pressure standards at simulated ambient concentrations.

a. Set system to operating parameters given in Table 1.

b. Open Vacuum Valve and evacuate Volume Measuring Canister to 24.0".

c. Turn Intake Valve to "sample" position.

d. Open Intake Valve and turn Selector to vacuum and flush system and glass bead Freezeout Loop at 22" vacuum.

e. Close Intake Valve, and turn selector to off. Re-evacuate Volume Measuring Canister to 24.5".

f. Flush system with a small amount of sample by turning Selector to vacuum, open Sample Canister and let pressure rise to 22". Close Sample Canister, and turn Selector to off. Re-evacuate Volume Measuring Canister to 24.5".

g. Place Freezeout Loop in liquid oxygen Dewar.

h. Open valve on Sample Canister.

i. Turn Selector to vacuum and let pressure rise in Volume Measuring Canister until it reaches 14". This corresponds to a sample size of 500 mL.

j. Turn Selector to off. Close valve on Sample Canister.

k. Place Capillary Loop in liquid oxygen Dewar.

l. Set timer for 2.5 min, and turn Sample Valve to inject.

m. Remove liquid oxygen, place Freezeout Loop in hot water bath and simultaneously start timer.

n. On GC/MS computer enter the data acquisition program and set up data collect ion file for standard. Standard files are formatted as: S(Days Date)(Last digit of year)A(Run Number).D Turn on cryo option, and enter the Prepare To Inject Program.

o. After 2.5 min and oven temperature of -20´C, turn Sample Valve to load position, hit the GO softkey on the computer, and simultaneously pull out capillary loop. Min set initial oven temperature to-20° C.

p. Remove hot water from Freezeout Loop.

q. Turn cryo valve off at 25° C. CLEAR. ENTER OFF.

r. Disconnect Sample Canister from Sample Intake Line, record can pressure, place cap on Sample Canister, and place on temporary storage shelf.

5.2.5 Permanent Gases

1. Standards

a. Set system to operating parameters.

b. Light FID, turn on TCD, and place sample valve in load position.

c. Connect standard cylinder to sampling line.

d. Open valve on standard cylinder and let bubble for 3 seconds to flush loop. Close valve.

e. Rotate sample valve to inject position, start integrator.

f. Turn second column valve to out position at 1.6 min.

g. Turn second column valve to in position at 8.0 min.

h. At end of run turn sample valve to load position.

i. Disconnect standard cylinder.

2. Ambient Air Samples

This procedure can be used to load low pressure samples in stainless steel sample canisters, and to load low pressure standards at simulated ambient concentrations.

a. Set system to operating parameters.

b. Light FID, turn on TCD, and turn sample valve to load position.

c. Connect sample canister to sampling line.

d. Open valve on sample canister, and let bubble for 3 seconds to flush loop. Close valve.

e. Turn sample valve to inject, and start integrator.

f. Turn second column valve to out position at 1.6 min.

g. Turn second column valve to in position at 8.0 min.

h. At the end of the run, turn sample valve to load.

i. Disconnect sample canister from sample intake line, record can pressure, place cap on sample canister, and place on table for light hydrocarbon analysis.

## 5.3 Calibration Standards

There are two types of calibrations performed for the hydrocarbon analysis. One is for the amount of the various hydrocarbons present and the second is for the identification of the retention times of the different hydrocarbons species.

### 5.3.1 Quantitative Standards

The concentrations of the individual hydrocarbons were determined by their uniform carbon response on the FID. This procedure is the recommended calibration Ðprocedure and has been shown to be accurate to 5 to 8% (Lonneman, 1979). The primary calibration standard used for the light and heavy hydrocarbons is a NBS traceable reference gas standard obtained from Scott-Marrin, Riverside, CA. The specifications of the standard are shown in Figure 5.3.1.(a) the light hydrocarbon fraction is calibrated against propane and the non-aromatic fraction of the heavy hydrocarbons are calibrated against hexane. The aromatic hydrocarbons are calibrated against benzene. The standard cylinder is returned every year for recalibration by the manufacturer. The concentrations of the hydrocarbons in the standard are converted to parts per billion carbon (ppbC) using the procedure described by Westbert et. al. (1984).

The concentrations of the individual compounds are determined by using an External Calibration procedure, in which the compound's response is compared to the response of a standard. The primary calibration standard is an NIST traceable reference gas standard obtained from Scott-Marrin, Inc., Riverside,CA. The specifications of the standard are shown in Figure B.5.3.1(b) & (c) The standard cylinder is returned every six months for recalibration by the manufacturer. In addition, a standard containing toluene, o-xylene, ethene and propene is used to verify response for these compounds.

Standards for aldehyde determinations were prepared as described in ARB Method 110.

Intercomparison of the light and heavy hydrocarbon runs can be made using both the propane peak and the hexane peak. The propane peak can be used because the heavy loaded column is capable of separating the lighter hydrocarbons.

### 5.3.2 Qualitative Calibration

The retention times were calibrated against commercial gas standard blends of different hydrocarbons and from laboratory standards prepared from neat materials.

The commercial gas blends are available from Ideal Gas Products and Scott Specialty Gases. These standards are used to establish retention times and to check concentrations obtained from the NBS traceable standard.

Laboratory standards are prepared from pure materials for those compounds not available in gas blends. Known quantities of the pure materials are diluted with a measured volume of "zero air". Dilutions are made in stainless steel canisters and are stable for use in retention time calibrations for several months.

FIGURE 5.5.1 (a)

SCOTT-MARRIN, INC.
2001 THIRD ST. • UNIT H • RIVERSIDE, CA 92507
TELEPHONE (714) 784-1240

# REPORT OF ANALYSIS

TO: Steve Hoyt
Environmental Analytical Science
3576 Empleo St., Suite 5
San Luis Obispo, CA 93401

DATE: 23 October 1986

CUSTOMER ORDER NUMBER: 1171

CYLINDER NUMBER CC121

| COMPONENT | CONCENTRATION(v/v) |
|---|---|
| Propane | 4.71 ± 0.05 ppm |
| n-Hexane | 5.12 ± 0.1 ppm |
| Benzene | 5.01 ± 0.1 ppm |
| Nitrogen | Balance |

CYLINDER NUMBER _____

| COMPONENT | CONCENTRATION(v/v) |
|---|---|

CYLINDER NUMBER _____

| COMPONENT | CONCENTRATION(v/v) |
|---|---|

CYLINDER NUMBER _____

| COMPONENT | CONCENTRATION(v/v) |
|---|---|

ANALYST M. C. Dodd

APPROVED J.T. Marrin

The only liability of this company for gas which fails to comply with this analysis shall be replacement or reanalysis thereof by the company without extra cost.



76

FIGURE 5.3.1.(a2)

SCOTT-MARRIN, INC.
2001 THIRD ST. • UNIT H • RIVERSIDE, CA 92507
TELEPHONE (714) 784-1240

# REPORT OF ANALYSIS

**TO:**

Steve Hoyt
Environmental Analytical Services
3576 Empleo, Suite #5
San Luis Obispo, CA 93401

**DATE:** 5 November 1987

**CUSTOMER ORDER NUMBER:** 1253

**CYLINDER NUMBER** CC62416

| COMPONENT | CONCENTRATION(v/v) |
|---|---|
| inyl Chloride | 5.14 ± 0.1 ppm |
| i lloromethane | 5.25 ± 0.1 ppm |
| ri hloromethane | 0.515 ± 0.01 ppm |
| ,2-Dichloroethane | 5.20 ± 0.1 ppm |
| , 1-Trichloroethane | 0.520 ± 0.01 ppm |
| etrachloromethane | 0.525 ± 0.01 ppm |
| r hloroethylene | 0.530 ± 0.01 ppm |
| enzene | 5.25 ± 0.1 ppm |
| ,2-Dibromoethane | 5.29 ± 0.1 ppm |
| e rachloroethylene | 0.530 ± 0.01 ppm |
| itrogen | Balance |

ANALYST M. Dodd

M. Dodd

APPROVED J. T. Marrin

J. T. Marrin



The only liability of this company for gas which fails to co alysis shall be replacement or reanalysis thereof by the company without extra cost.

FIGURE 5.3.1 (a3)

SCOTT-MARRIN, INC.
2001 THIRD ST. • UNIT H • RIVERSIDE, CA 92507
TELEPHONE (714) 784-1240

# REPORT OF ANALYSIS

**TO:**

Steve Hoyt
Environmental Analytical Services
3576 Empleo Street, Ste. 5
San Luis Obispo, CA 93401

**DATE:** 12 September 1988

**CUSTOMER ORDER NUMBER:** 1367

**CYLINDER NUMBER** CC68692

| COMPONENT | CONCENTRATION(v/v) |
|---|---|
| Halocarbon-12 | 5.20 ± 0.1 ppm |
| Halocarbon-11 | 4.40 ± 0.1 ppm |
| 1,1-Dichloroethylene | 4.87 ± 0.1 ppm |
| 1,1-Dichloroethane | 5.05 ± 0.1 ppm |
| 1,1,2-Trichloroethane | 5.20 ± 0.1 ppm |
| Nitrogen | Balance |

ANALYST J. W. Gay

APPROVED J. T. Marrin

The only liability of this company for gas which fails to co analysis shall be replacement or reanalysis thereof by the company without extra cost.

## 5.4 Calibration Procedures

### 5.4.1 Methane

The methane analyzer was calibrated by passing the methane standard through a 1.0 mL calibrated sample loop. The standard was then injected onto the column according to the standard operating procedures. The concentration of the methane is determined using the following formula.

Methane (ppmC) = Standard Conc. (ppmv) * 1 * (Sample Area/Standard Area)

The factor of one accounts for the one carbon atom in methane.

### 5.4.2 Hydrocarbons

The light and heavy hydrocarbons were calibrated by using a dilution of the 5 ppm NBS traceable standard. A summary of the calibration procedures is shown in Table 5.4.2. The daily calibration consists of a zero point and two calibration points (10% and 100% of range). One calibration point is run at the beginning of the dat and one at the end of the day. Weekly, a three point calibration is run to verify the linearity of the instrument. During the monthly internal audit of the analytical system a 5 point calibration curve is run to establish performance criteria for the system.

Standards were prepared using a gas dilution system on the gas chromatograph or by making static dilutions to atmospheric levels. The gas dilution system is constructed from an 8 port gas sampling valve with a 0.05 mL, 0.5 mL, and 5.0 sample loops. The loops are filled with the standard and flushed with "zero air" prepared with an AADCO Model 737 pure air generator. The three loop sizes are used to prepare a three point calibration of the system to check the linearity in the concentration range of interest. The gas dilution system is used for the daily instrument calibration. The concentration of the individual hydrocarbons is determined using the following formula:

Hydrocarbon (ppbC) = Standard Conc. (ppbv) * number of carbons * (Sample Area/Standard Area)

Standards at atmospheric concentration levels were prepared by diluting the NBS traceable standard in stainless steel canisters. The standards are diluted by using a calibrated syringe to inject a measured volume of NBS traceable standard into a passivated stainless steel canister. The canister is filled with a known volume of zero air measured using a mass flow meter. The diluted standards are run in exactly the same manner as the samples and serve as a check of the sample concentration and injection system.

### 5.4.3 GC/MS Compounds

The GC/MS Compounds were calibrated using a dilution of the NBS traceable standard. The daily calibration consists of a zero point and two calibration points (10% and 100% of range). One calibration point is run at the beginning of the day and one at the end of the day. Weekly, a three point calibration is run to verify the linearity of the instrument. During the monthly internal audit of the analytical system a 5 point calibration curve is run to establish performance criteria for the system.

Standards were by using a gas dilution system on the gas chromatograph or by making static dilutions to atmospheric levels. The gas dilution system is constructed from an 8 port gas sampling valve with a 0.05 mL, 0.5 mL, and 5.0 sample loops. The loops are filled with the standard and flushed with "zero air" prepared with an AADCO Model 737 pure air generator. The three loop sizes are used to prepare a three point calibration of the system to check the linearity in the concentration range of interest. The gas dilution system is used for the daily instrument calibration.

The concentration of the individual hydrocarbons is determined using the following formula:

Compound (ppbv) = Std. Conc. (ppbv) * (Sample Area/Std. Area) * (Std. Volume/Sample Volume)

Standards at atmospheric concentration levels were prepared by diluting the NBS traceable standard in stainless steel canisters. The standards were diluted using a calibrated syringe to inject a measured volume of the NBS traceable standard into a passivated stainless steel canister. The canister is filled with a known volume of zero air measured using a mass flow meter. This ambient level standard is sent to another laboratory for calibration against the NBS 5 ppbv VOC standard. The diluted standard is run in exactly the same manner as the samples and serves as a check of the sample concentration injection system.