SECTION 9

FOOD AND AGRICULTURE PROCESSING

9.1 INTRODUCTION

The processing of agricultural products includes many operations which produce fine particle emissions. These include drying, shipping, conveying, cleaning, milling, and grinding. There are many variables which affect the fine particle emissions from a given process. Some of these variables are: the type of crop being processed, its growing location and methods, the method used to harvest the crop, and the amount of cleaning which has already been done.

The major point sources of fine particle emissions in the food and agricultural processing industries in California, as determined from EIS data (California Air Resources Board, 1980), are covered in this section. They are:

1. Rice drying
2. Grain drying
3. Alfalfa drying
4. Grain and feed milling
5. Cotton ginning

Shipping and handling operations are major sources of dust. However, only 12-15% by weight are less than 3μm in diameter according to Farant et al. (1978).

9.2 RICE DRYING

9.2.1 Process Description

The information in this section is from Taback et al. (1979), who described a source test of a rice dryer. A schematic of the rice dryer tested is shown in Figure 9.2.1-1.

Rice is harvested with a moisture content of 18-20% and must be dried to a moisture content of 1-2% for transport and storage. The rice is passed downward between two concentric screens. Air heated to about 50°C (120°F) by burning natural gas is passed up the center of the column and out through the rice. Rice must be dried slowly to prevent cracking. Therefore, the rice is stored after each pass until it reaches an equilibrium temperature and moisture content and then passed through the dryer again. This is repeated as many times as necessary.

The warm air which passes through the rice is loaded with chaff which consists of light pieces of the grain husks. The air also contains soil and fine particles of rice which are produced from the abrasive action of the grain.

The air vents to the atmosphere through screens in the enclosure which collect the large chaff particles. The particles

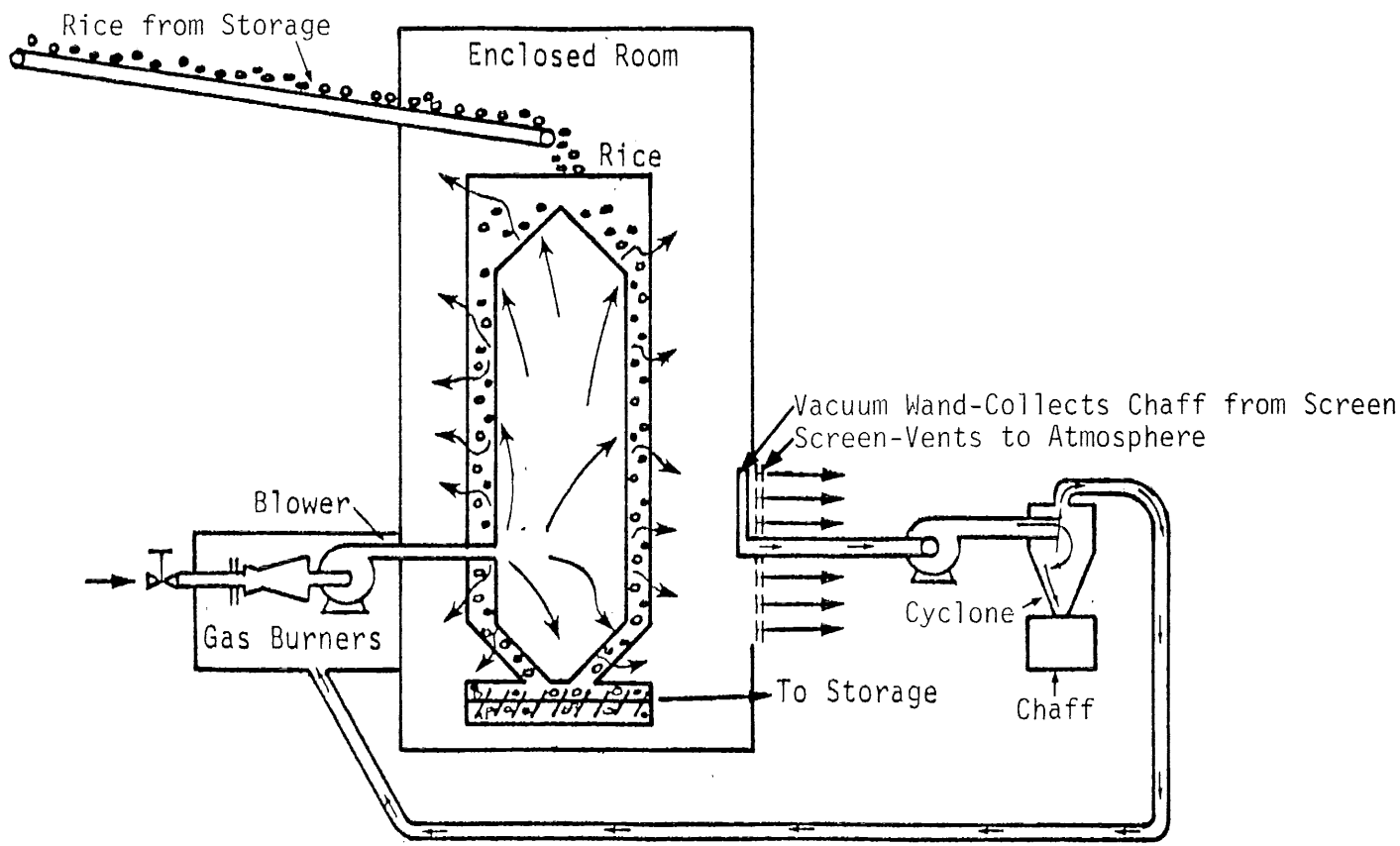

Figure 9.2.1-1. Rice dryer (Taback et al., 1979).

on the screens are removed by vacuum wands and collected by cyclones. The finer particles are exhausted to the atmosphere.

9.2.2 Source Characteristics

Figure 9.2.2-1 shows size distribution data for dust sampled at a rice dryer. The source was uncontrolled, however, some of the chaff was collected by screen vents as described by Taback et al. (1979). Table 9.2.2-1 shows the chemical composition of the particles collected in this test. Other particle characteristics are shown in Table 9.2.2-2. Gas characteristics for rice drying are given in Table 9.2.2-3.

9.2.3 Control Technology

The cyclone is the primary control device used in rice drying and in most food and agricultural processing operations. Cyclones are not efficient collection devices for fine particles (see Section 7). There can also be a problem in containing the exhaust air. In the case depicted in Figure 9.2.1-1, most of the exhaust air was vented to the atmosphere rather than being drawn through the cyclone.

9.3 GRAIN DRYING

9.3.1 Process Description

Grain dryers are used at elevators, feed mills, and large farms to remove excess moisture from the grain prior to storage. Column dryers and tray dryers are used for grain drying. The column dryers are similar to the rice dryer described in Section 9.2.1. In tray dryers, the grain is placed on trays in the dryer. Heated air is circulated over the wet grain until the desired moisture content is reached. According to Danielson (1973), tray dryers emit negligible amounts of dust.

For feed processing, flash dryers, also known as pneumatic conveying dryers, are used. This technique is normally used when disintegration of grain is desired (Hardison, 1973). A simple flash dryer is shown in Figure 9.3.1-1. The wet grain is dispersed into a hot gas stream moving at a high velocity through a duct. The hot gas dries the grain and transports it to a collection cyclone. The gas is vented from the top of the cyclone as shown. A cage mill is often used to feed the wet material to the dryer because it disperses the material better than an auger.

9.3.2 Source Characteristics

The particles emitted from grain dryers will vary with grain types and the amount of residual soil and other contaminents remaining after cleaning (Vandegrift et al., 1970). Particle size distribution data has not been obtained for grain dryers. Figure 9.3.2-1 shows particle size distribution data for

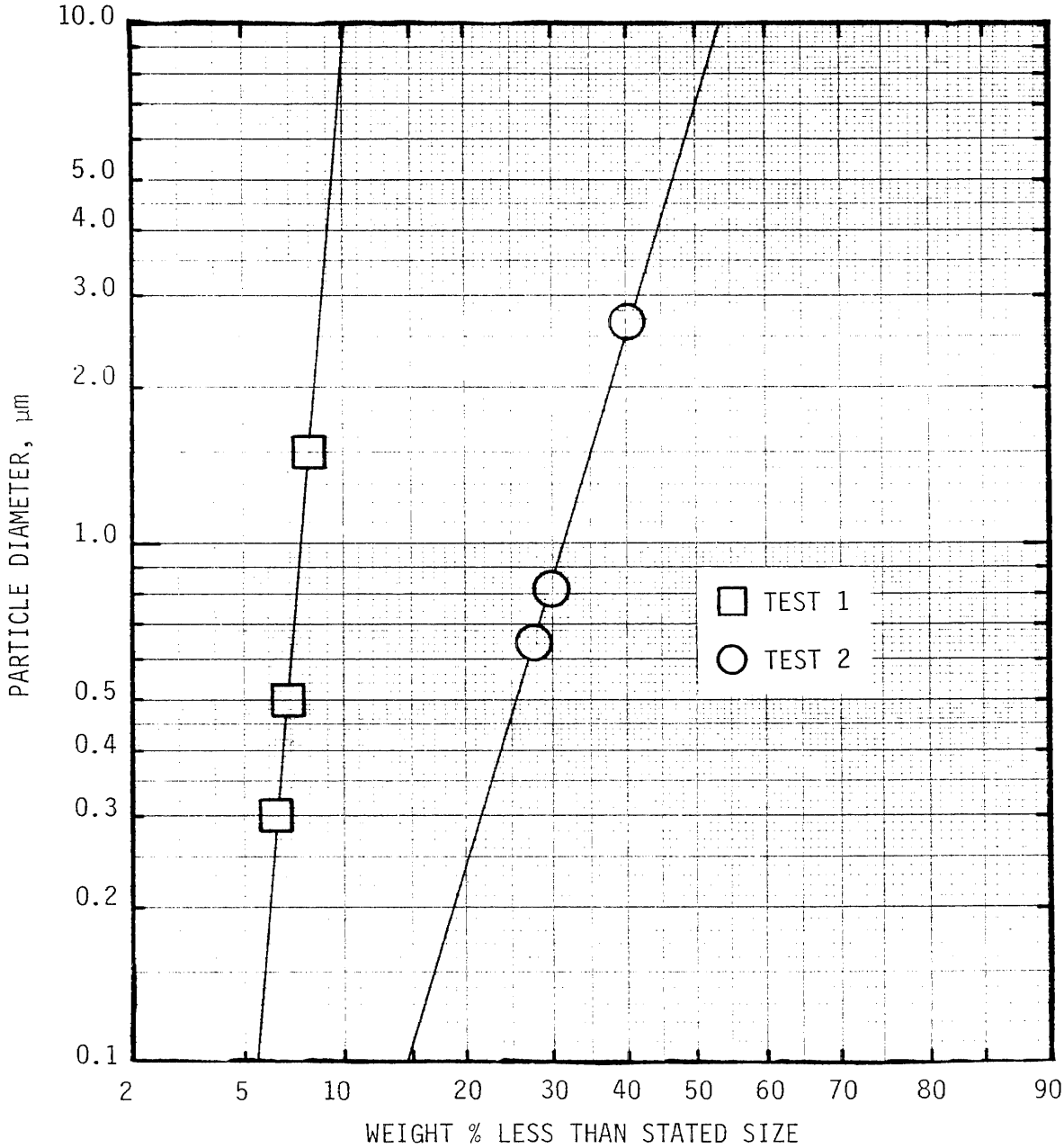

Figure 9.2.2-1. Particle size distributions for rice dryer (Taback et al., 1979).

TABLE 9.2.2-1. RICE DRYER PARTICLE ELEMENTAL ANALYSIS [a]

All Numbers in Weight Percent

	Composite	<1 μm	1-3 μm	3-10 μm	>10 μm
Calcium		1	1	1	
Carbon	12				12
Iron		5	4	4	
Potassium				3	
Silicon	10	5	6	8	11
Other (O_2, N_2, H_2)	88	89	89	84	77
Total	100	100	100	100	100
Wt % of Composite in each size range	100	30	12	12	46

[a]Taback et al. (1979).

TABLE 9.2.2-2. RICE DRYER PARTICLE CHARACTERISTICS[a]
Mass Concentration, mg/Nm³

Process	Uncontrolled Total	Uncontrolled <3 μmA	Controlled Total	Controlled <3 μmA	Particle Density g/cm³	Particle Resistivity ohm-cm
Rice Drying	20-35	4-8				

[a]Taback et al. (1979).

TABLE 9.2.2-3. RICE DRYER GAS CHARACTERISTICS[a]

Process	Production Rate	Gas Flowrate Nm^3/kg (unless otherwise noted)	Temperature °C	Chemical Composition, % vol, dry (unless otherwise noted)
Rice Drying		60 Nm^3/s	50	

[a]Taback et al. (1979).

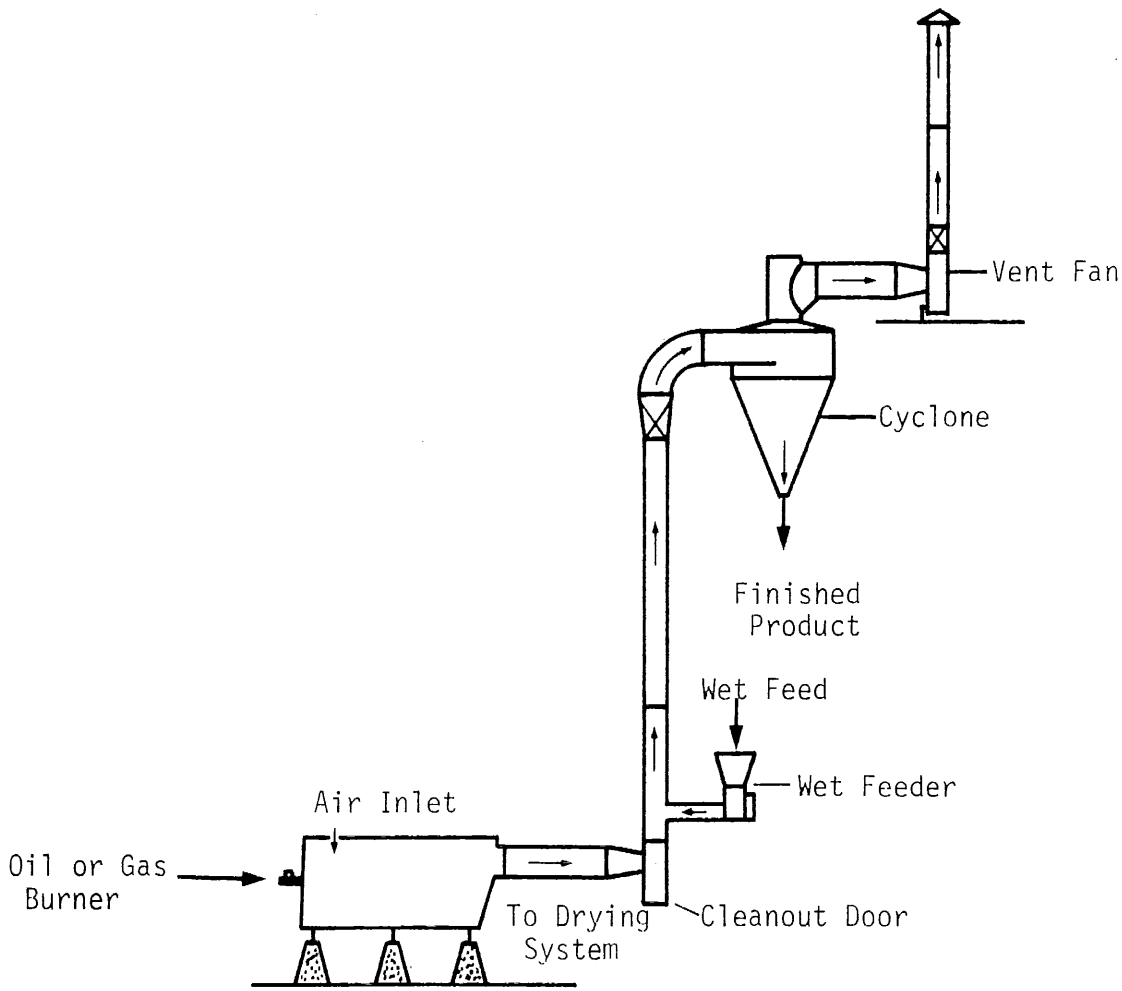

Figure 9.3.1-1. Flash dryer (Danielson, 1973).

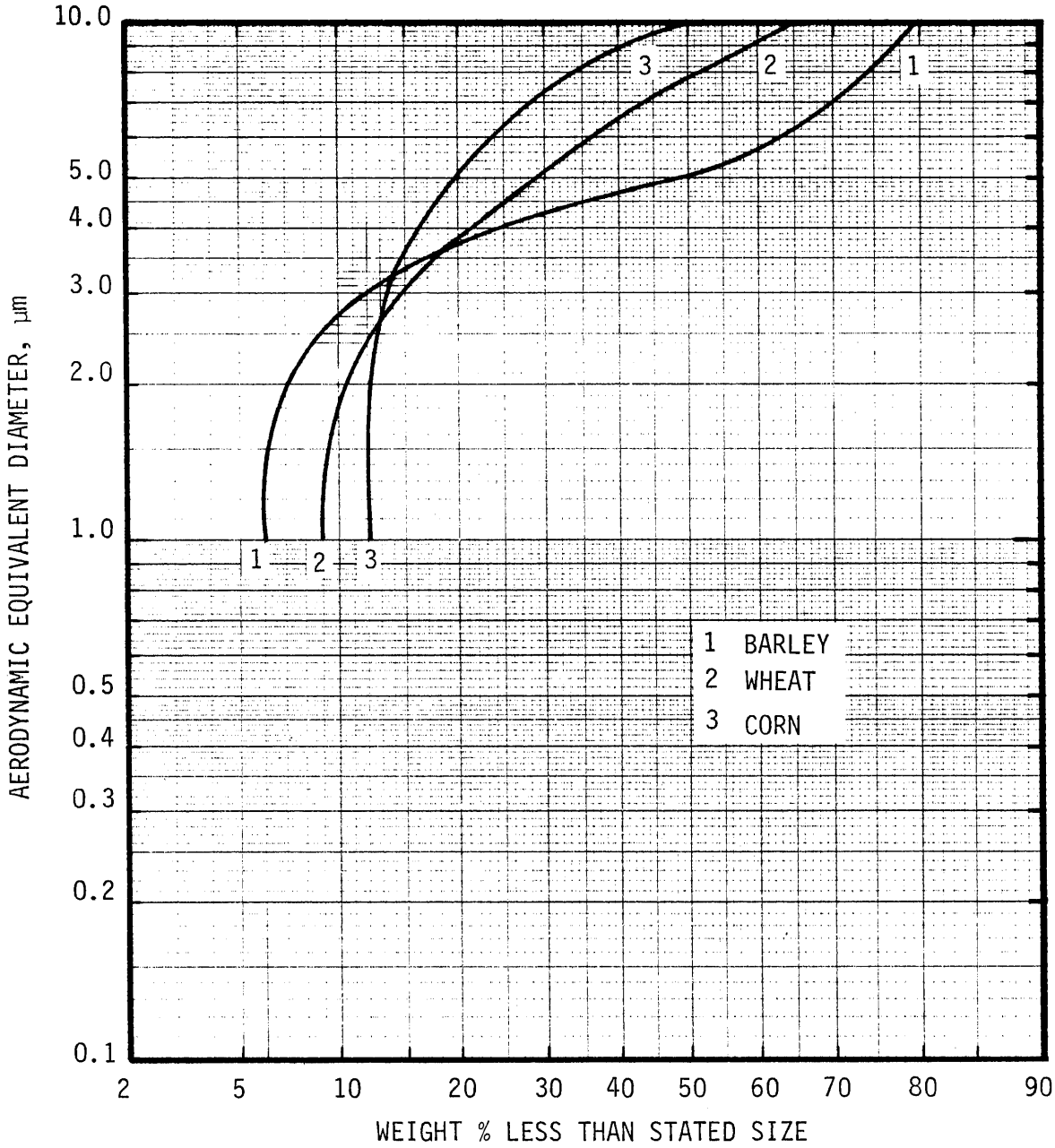

Figure 9.3.2-1. Particle size distributions measured at grain elevators (Farant et al., 1978).

emissions measured at a grain elevator reported by Farant et al. (1978). The term "aerodynamic equivalent diameter" was not defined. Table 9.3.2-1 shows chemical composition reported for grain by Taback et al. (1979). Tables 9.3.2-2 and 9.3.2-3 show particle and gas characteristics which have been reported for grain dryers.

9.3.3 Control Technology

The cyclone shown on the flash dryer in Figure 9.3.1-1 is primarily for the collection of the dried product rather than for air pollution control. Particle emissions are a problem as are emissions of odorous gases according to Hardison (1973). The moisture content of the gas from drying operations can cause clogging problems in high efficiency cyclones and in baghouses (Cowherd, 1971).

9.4 ALFALFA DRYING

9.4.1 Process Description

Fresh cut alfalfa (60-80% moisture according to Cowherd, 1971) is fed into a direct-fired rotary dryer. The dryer, shown in Figure 9.4.1-1, consists of a rotating drum supplied with air at approximately 1040°C (1900°F) according to Vandegrift et al. (1970). Metal protrusions inside the rotating drum lift the material and shower it through the hot gas as shown in Figure 9.4.1-2.

The dried alfalfa (8-16% moisture) is pneumatically conveyed through one or two cooling cyclones, both of which are sources of emissions. The alfalfa is then ground by a hammermill into meal. The air meal separator cyclone is a source of finer particle emissions than the cooling cyclones (Vandegrift et al., 1970). The alfalfa meal is then further processed into pellets to be used in animal feed.

9.4.2 Source Characteristics

Figure 9.4.2-1 shows size distribution data reported by Cowherd (1971). One case is for the emissions from the primary cooling cyclone. In the second case, exhaust air from the air meal separator was vented through the primary cooling cyclone. This curve is notated as "Dryer and Meal".

Tables 9.4.2-1 and 9.4.2-2 show the particle and gas characteristics.

9.4.3 Control Technology

The product collection cyclones used in alfalfa dehydrating produce fine, lightweight emissions. Cowherd (1971) reported that about 80% of the dust emissions in a dehydrating plant are from the drying operation and that overdrying can greatly TABLE

9.3.2-1. GRAIN CHEMICAL COMPOSITION[a]

	Percent by Weight	
	Oats	Wheat
Organic fraction	82.2	87.2
Inorganic fraction	17.8	12.8
Free silica in total dust	8.0	7.4
Free silica in organic fraction	2.3	1.5
Free silica in inorganic fraction	5.7	5.9

[a]Vandegrift, et al., 1970

TABLE 9.3.2-2. GRAIN DRYER PARTICLE CHARACTERISTICS[a]

Mass Concentration, mg/Nm³

Process	Uncontrolled		Controlled		Particle Density g/cm³	Particle Resistivity ohm-cm
	Total	<3 μmA	Total	<3 μmA		
Grain Drying (Flash Method)	11					

[a]Hardison (1973)

TABLE 9.3.2-3. GRAIN DRYER GAS CHARACTERISTICS[a]

Process	Production Rate	Gas Flowrate Nm^3/kg (unless otherwise noted)	Temperature °C	Chemical Composition, % vol, dry (unless otherwise noted)
Grain Drying (Flash Method)	0.8-6.4 kg/s	4.2-4.6	80-120	10% H_2O

[a]Hardison (1973)

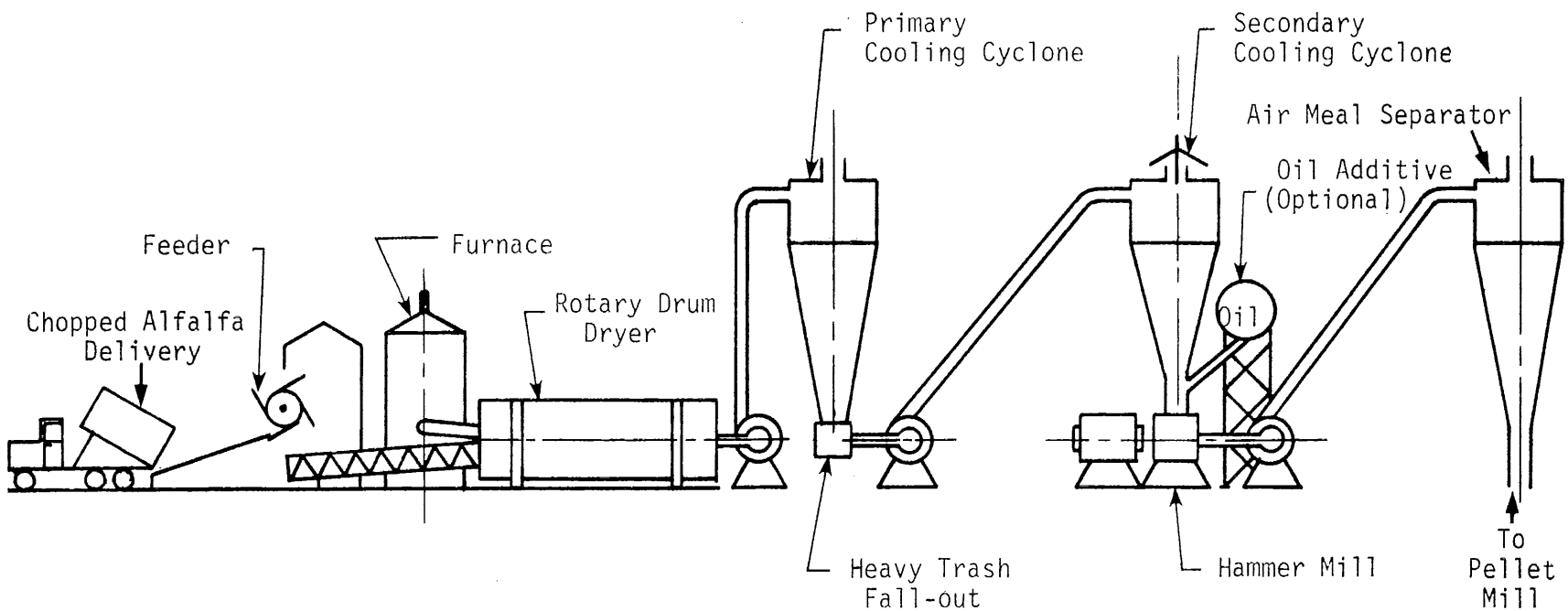

Figure 9.4.1-1. Alfalfa dryer (Vandegrift et al., 1970).

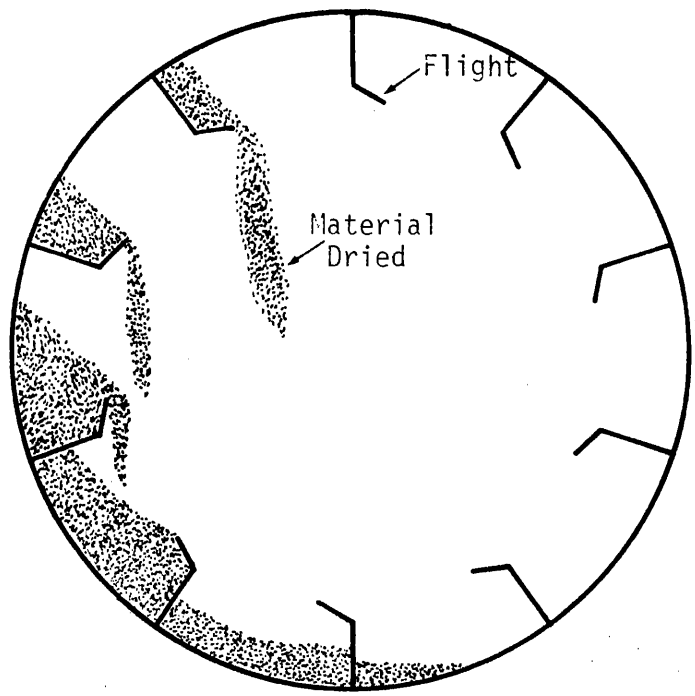

Figure 9.4.1-2. Rotary dryer interior (Danielson, 1973).

increase emissions. Therefore, control of the dryer operation is important.

Cowherd (1971) stated that the efficiency of a cyclone decreases rapidly for particle diameters below 5 μm. Problems occur in high efficiency, multicyclones because the moist particles can cause clogging. Clogging of baghouses due to high moisture content is also a problem.

An afterburner for combustion of the waste is highly efficient for controlling particle emissions, according to Cowherd (1971). Odors, as well as particles, are also controlled.

A small amount of animal fat is sometimes added to the alfalfa meal as shown in Figure 9.4.1-1. This technique reduces the particulate emissions from the cyclone as well as improving the food value of the alfalfa, according to Annis et al. (1970). It can cause problems in using control devices such as baghouses.

9.5 GRAIN GRINDING AND MILLING

9.5.1 Process Description

Grinding of grain is done in both the manufacture of animal feed and to produce flour. Hardison (1973) provided descriptions for grain milling operations. In feed manufacture a hammer mill is normally used. The grain is pulverized by swinging hammers and then sifted through screens with openings from 0.3-1.3 cm depending on the type of feed being produced. Oversized pieces are reground.

The process of flour milling involves many steps to clean and prepare the grain for grinding. Figure 9.5.1-1 shows a flour mill flow diagram. Wheat must be brought up to a moisture content of 15-19% prior to grinding. Tempering and conditioning are two processes by which this is accomplished.

The actual grinding is done in roller mills. The wheat passes between pairs of rollers which move in opposite directions and at different speeds. The rollers are spaced so that the grain is not crushed but broken up by shearing forces instead. The first series of rollers is designed to break the bran and the endosperm apart. Each pair of rollers is followed by a sifting system.

The endospserm passes on to the next series of rolls where it is ground into flour. The bran and germ are collected from the first series of rolls and used for other products.

9.5.2 Source Characteristics

Tables 9.5.2-1 and 9.5.2-2 show particle and gas characteristics for feed milling and flour milling. Size distribution and chemical composition data were not located in the literature survey.

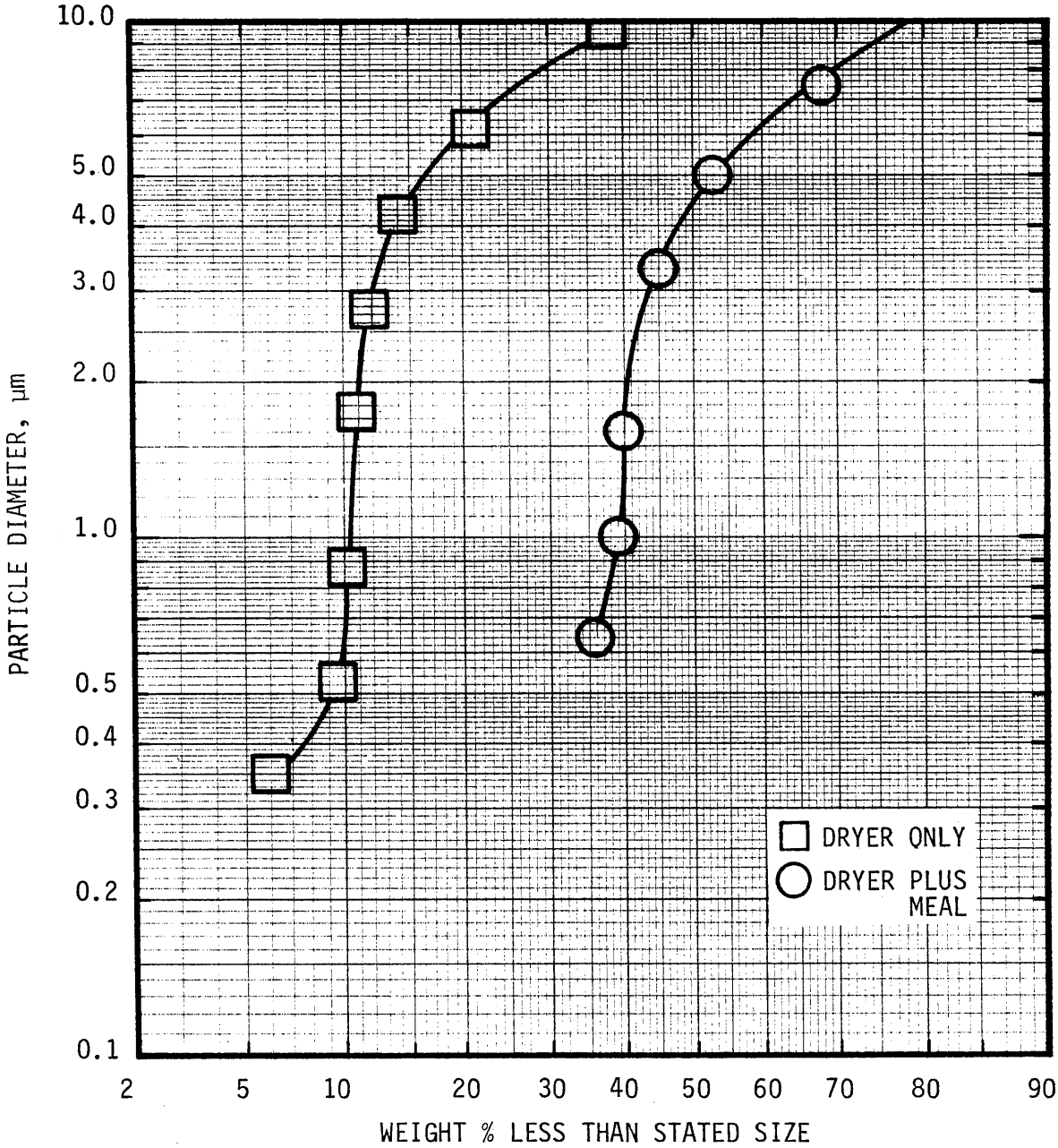

Figure 9.4.2-1. Particle size distributions for alfalfa dehydration, dryer emissions, and dryer plus air meal separator emissions (Cowherd, 1971).

TABLE 9.4.2-1. ALFALFA DRYING PARTICLE CHARACTERISTICS

Mass Concentration, mg/Nm³

Process	Uncontrolled Total	Uncontrolled <3 μmA	Controlled Total	Controlled <3 μmA	Particle Density g/cm³	Particle Resistivity ohm-cm
Primary Cooling Cyclone			230-460[a]	30-60[b*]		
Secondary Cooling Cyclone			230-910[a]		1.23[a]	
Air Meal Separator Cyclone			450-5,200[a]	190-2,240[b*]	1.32[a]	

[a]Vandegrift, et al. (1970).

[b]Cowherd

*Based on Figure 8.4.2-2

TABLE 9.4.2-2. ALFALFA DRYING GAS CHARACTERISTICS

Process	Production Rate	Gas Flowrate Nm^3/kg (unless otherwise noted)	Temperature °C	Chemical Composition, % vol, dry (unless otherwise noted)
Primary Cooling Cyclone	2.5[c]-4.2[b] kg/s	3.2-3.4[b]	140[b]-170[a]	41-48% H_2O[b]
Secondary Cooling Cyclone	2.5[c]-4.2[b] kg/s	1.8-2.3[a]	50-60[a]	1% CO_2[c] 20% O_2 19% H_2O
Air Meal Separator Cyclone	2.5[c]-4.2[b] kg/s	0.18-0.20[b]	30[a]-70[b]	17-18% H_2O[b]

[a]Vandegrift, et al. (1970).

[b]Cowherd

[c]Taback, et al. (1979).

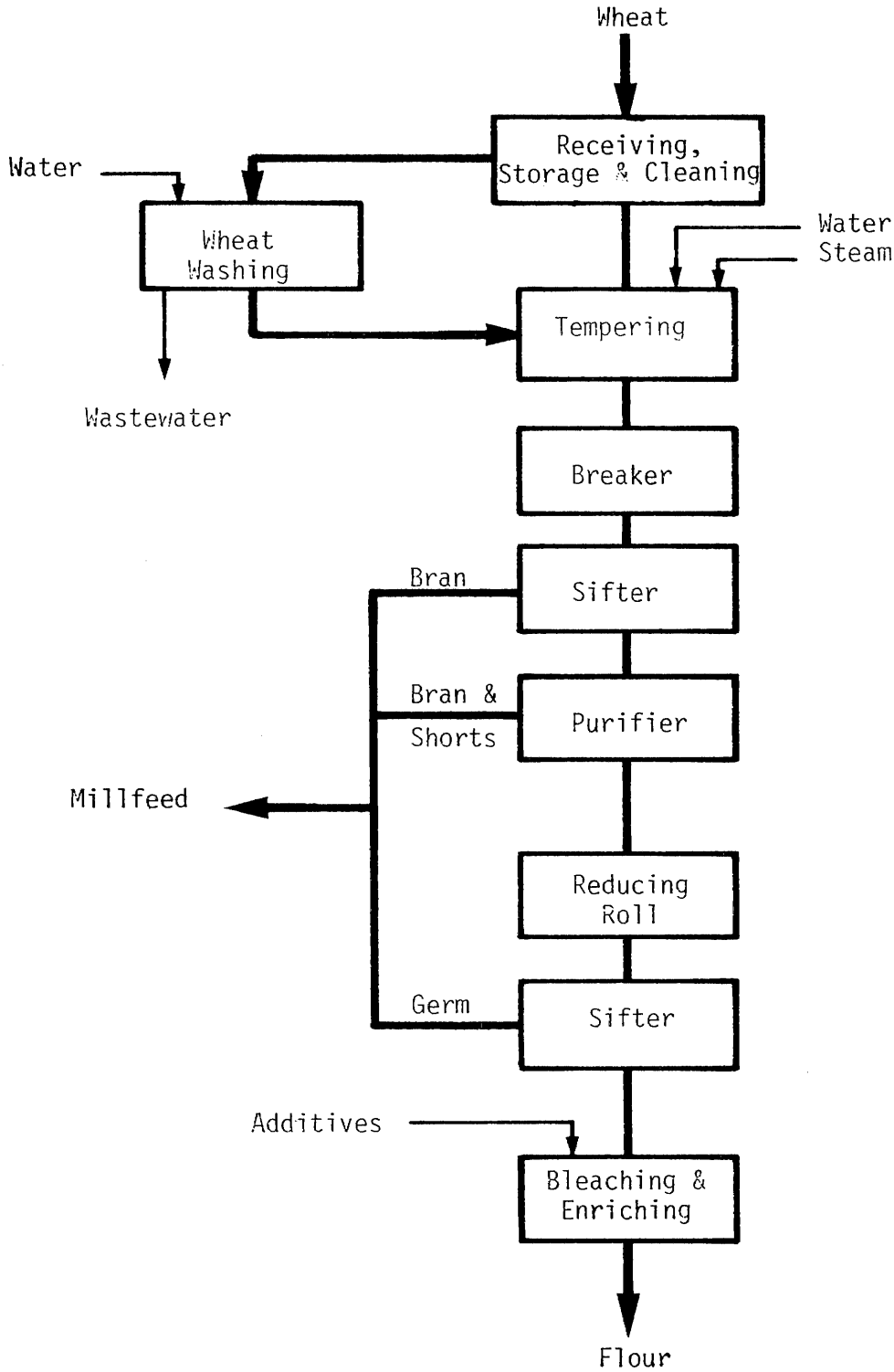

Figure 9.5.1-1. Flour mill flow diagram (Kuo et al.(1978).

TABLE 9.5.2-1. MILLING PARTICLE CHARACTERISTICS[a]

Process	Mass Concentration, mg/Nm³ Uncontrolled Total	Uncontrolled <3 μmA	Controlled Total	Controlled <3 μmA	Particle Density g/cm³	Particle Resistivity ohm-cm
Feed Milling (Baghouse Controlled)	1,116		23		1.8	
Flour Milling (Baghouse Controlled)	1,770		23			

[a]Hardison (1973)

TABLE 9.5.2-2. MILLING GAS CHARACTERISTICS[a]

Process	Production Rate	Gas Flowrate Nm^3/kg (unless otherwise noted)	Temperature °C	Chemical Composition, % vol, dry (unless otherwise noted)
Feed Milling	1.7-6.7 kg/s	1.26-1.28	38	
		1260-1280		
Flour Milling	1.7-5.3 kg/s	1.7-1.8 Nm^3/T	21	

[a]Hardison (1973)

9.5.3 Control Technology

Cyclones are widely used in the grain industry for both product collection and dust control. Baghouse devices are common in flour mills and other grain operations. They can achieve efficiencies close to 99% (Hardison, 1973).

Because of the tendency of grain dust to clog the small entrance openings, multicyclones are not commonly used. Electrostatic precipitators and wet scrubbers are rarely used. This is due to the dust explosion hazard and the desire for a dry by-product. The explosion and fire hazard is also a problem in baghouses, but it can be reduced by careful design (McLouth et al., 1961).

9.6 COTTON GINNING

9.6.1 Process Description

Cotton ginning is a seasonal operation, running less than three months each year (Wesley et al., 1978b). The process of cotton ginning involves several operations which are shown in Figure 9.6.1-1. According to Wesley et al. (1978a), the steps involved in cotton ginning are: cleaning the seed cotton, drying it, separating the cotton seed from the lint (done at the gin stand), cleaning the lint, passing it through a condenser, and finally, baling it.

Both the cotton fiber and the material removed from it are conveyed pneumatically. The material removed from the cotton in the various cleaning operations includes portions of the cotton plant and other vegetation, as well as sand and soil. This trash is collected in cyclones which have efficiencies of 90% or less (Roddy, 1978). The trash is either disposed of by incineration or by returning it to the land. A 1966 survey by the U. S. Department of Agriculture, as reported by Pendleton (1967), indicated that 94% of the gins in California returned the trash to the land.

A study has been performed for the California Energy Commission on the feasibility of burning cotton gin trash to heat air for the dryers (Agrotherm Division, Norman Pitt, Inc., 1980). The pilot plant studied used a cyclone and baghouse to collect the fly ash produced. It was reported that 40% of the fly ash produced by the combustion of the cotton gin trash was submicron in size. Outlet size data was not reported. If this practice is adopted by the gins it will most probably be a source of fine particle emissions. In addition, incineration of gin trash is known to be a source of arsenic emissions (U.S. Department of Health, Education and Welfare, 1967). This problem was not addressed in the report by Agrotherm (1980).

Dust is emitted from the trash collector cyclones as well as points in the process stream. Two primary sources of lint and fine dust emissions are the open front of the gin stands and the lint cleaners. Emissions also occur from leaks in the pneumatic

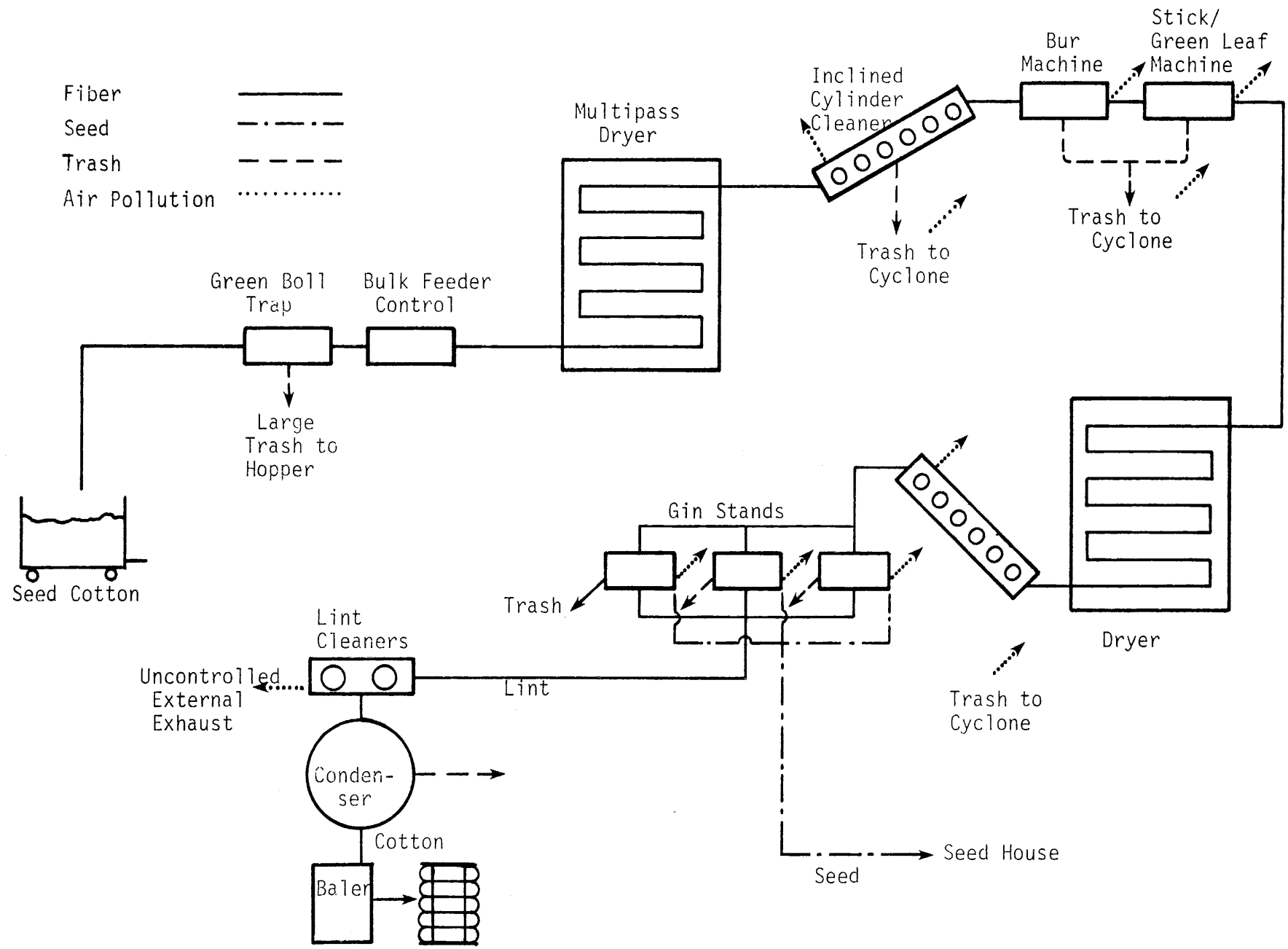

Figure 9.6.1-1 Cotton ginning (Bethea et al., 1977).

conveying system.

9.6.2 Source Characteristics

Figure 9.6.2-1 shows size distribution for a battery condenser at a cotton gin. The emissions were controlled by a scrubber. Inlet and outlet distributions, as reported by Lee et al. (1975), are shown.

Table 9.6.2-1 shows a summary of chemical analysis data which have been reported in literature for cotton dust. Table 9.6.2-2 shows particle characteristics for several operations at a cotton gin. Gas characteristics for cotton ginning operations are shown in Table 9.6.2-3.

9.6.3 Control Technology

The dust collected at various locations is typically conveyed pneumatically to a battery of high efficiency cyclones located beside the gin building, according to the U.S. Department of Health, Education and Welfare (1967). The material collected by these cyclones is fed into another air line which conveys the dust to another cyclone. This cyclone feeds into a large "trash house" or into an incinerator.

Roddy (1978) described an air filter system which employs rotating drums of mesh screen. These drums collect the lint which is then vacuumed off the drums. Particles which settle out of the air are collected in a hopper below the drums. The collected trash is then conveyed to cyclones. An efficiency of 95% was reported.

The U.S. Department of Health, Education and Welfare (1967) reports that similar filtering devices are effective for controlling emissions from the cyclone. The efficiency of the wire screens increases as the lint collects on them. However, they must be cleaned when the pressure drop across them becomes too high. Therefore, they must operate on a filtering/cleaning cycle as baghouses do. No efficiencies were reported.

9.7 CALCULATIONS

Control devices evaluated for food and agricultural processes are listed in Table 9.7-1. Because of a potential fire hazard, only the filter and the unaided scrubbers were considered. Calculation results are summarized in Tables 9.7-2 through 9.7-7.

Food and agricultural processes are seasonal operations. In most situations, they run less than three months each year. Therefore, a duty factor of 0.1 was used in estimating the operating costs.

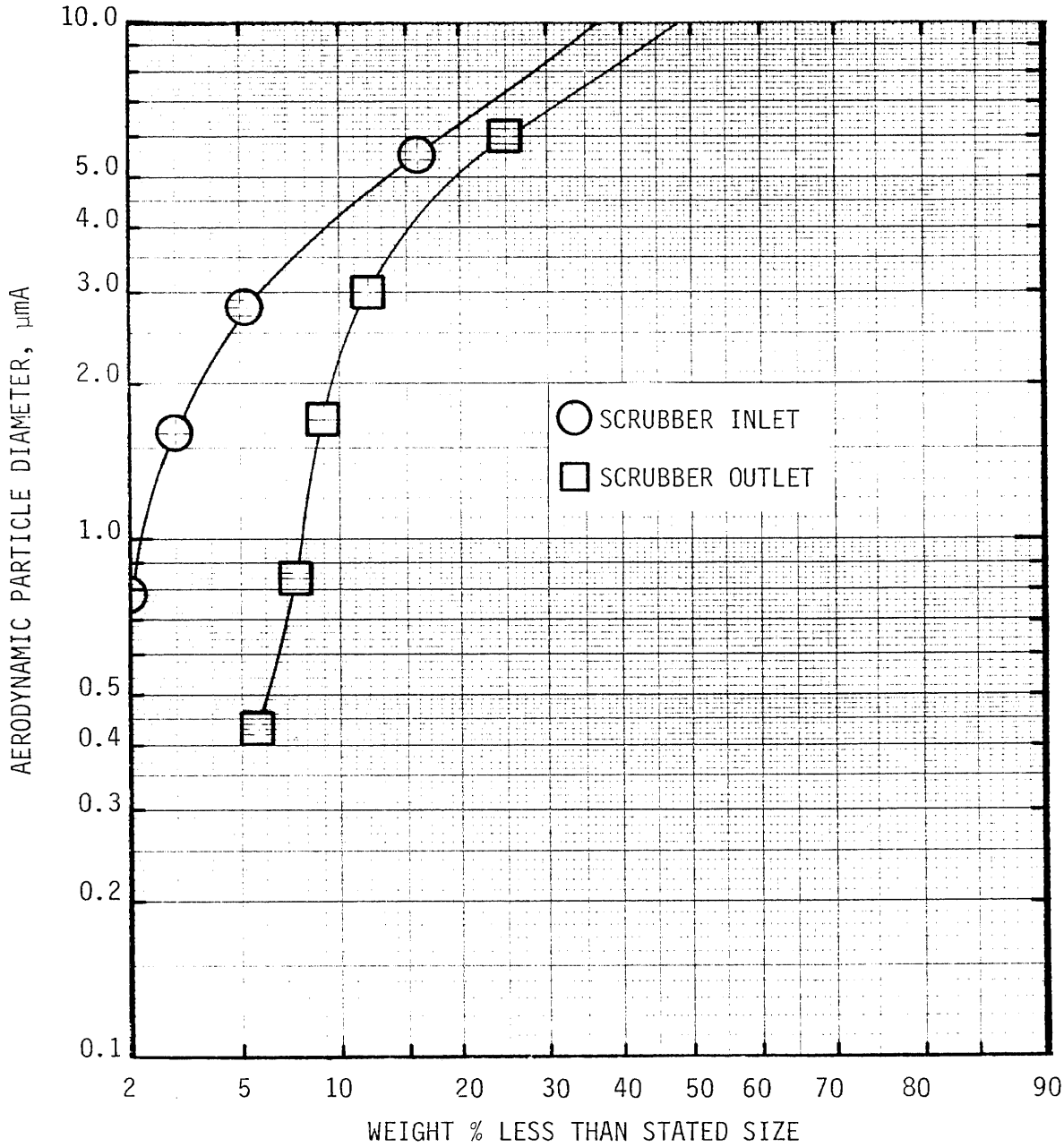

Figure 9.6.2-1. Particle size distributions for cotton gin condenser (Lee et al. (1975).

TABLE 9.6.2-1. COTTON DUST ELEMENTAL ANALYSIS

All Numbers in Weight Percent

	Cotton Gin Dust[a] (Avg. of 5 Gins)	Cotton Mill Dust[b] SJ-1 Variety Grown in Bakersfield, CA
Aluminum	1.46	0.77
Calcium	1.15	2.04
Chlorine	0.16	0.23
Copper	-	0.02
Iron	0.45	0.38
Magnesium	1.04	1.12
Manganese	0.01	-
Phosphorous	0.52	1.22
Potassium	1.82	2.12
Silicon	7.69	8.50
Sulfur	0.32	0.64
Titanium	0.05	0.06
Zinc	0.05	0.01
Total	14.72	17.11

[a]Wesley, et al., 1978b.

[b]Brown, et al., 1977.

TABLE 9.6.2-2. COTTON GINNING PARTICLE CHARACTERISTICS

Mass Concentration, mg/Nm³

Process	Uncontrolled Total	Uncontrolled <3 μmA	Controlled Total	Controlled <3 μmA	Particle Density g/cm³	Particle Resistivity ohm-cm
Incliner Cleaner	25[a]					
Unloading and Dryer	110[a]					
Unloading Separator	230[a]					
Mote Cleaner	200[a]					
Lint Cleaner	70-200[a]					
Battery Condenser	16[b]-50[a]	1-3[b*]	2.3[b]	0.3[b*]		

[a]Taback et al. 1979

[b]Lee et al. 1975

*Based on Figure 8.6.2-1.

TABLE 9.6.2-3. COTTON GINNING GAS CHARACTERISTICS

Process	Production Rate	Gas Flowrate Nm^3/kg (unless otherwise noted)	Temperature °C	Chemical Composition, % vol, dry (unless otherwise noted)
Incliner Cleaner		5.8 Nm^3/s	62[a]	3% H_2O[a]
Unloading and Dryer		5.2 Nm^3/s	46[a]	0.8% H_2O[a]
Unloading Separator		2.8 Nm^3/s	21[a]	0.2% H_2O[a]
Mote Cleaner		1.2 Nm^3/s	22[a]	0.9% H_2O[a]
Lint Cleaner		6.2-8.3 Nm^3/s	23-27[a]	0.3-0.2% H_2O[a]
Battery Condenser		7.5-11.5 Nm^3/s	28[a]	2% H_2O[a]

[a]Taback et al. (1979).

TABLE 9.7-1. LIST OF PERFORMANCE CALCULATIONS

EMISSION SOURCE	CONTROL DEVICE								
	ESP	Pulse Charging ESP	Precharging ESP	Filter	Electrified Filter	Venturi	Calvert Collision Scrubber	Charged Particle/Charged Drop Spray Scrubber	F/C Scrubber
Rice Drying				X		X	X		
Barley Drying				X		X	X		
Corn Drying				X		X	X		
Wheat Drying				X		X	X		
Alfalfa Drying				X		X	X		
Grain Grinding									
Cotton Ginning				X		X	X		

TABLE 9.7-2

CONTROL TECHNOLOGY FOR STATIONARY SOURCES OF AIR POLLUTION

INDUSTRY: Food and Agriculture

SECTION:

PROCESS	EMISSION SOURCE	PL	CONTROL TECHNOLOGY	CAPITAL, OPERATING, ANNUALIZED COSTS, $	EFFY (%)	REL (%)	S	ENERGY USE	ENVIR IMPACT	REMARKS	REF
Rice drying	Rice dryer		PM Filter	15,607/m^3/s 1,380/m^3/s 3,213/m^3/s	96.8		2	6.5kW/m^3/s		E=90.8% for d_{pa} < 3μmA. Air/cloth =0.93 m/min.	
Rice drying	Rice dryer		PM Filter	13,213/m^3/s 1,195/m^3/s 2,747/m^3/s	87.7		2	7.7kW/m^3/s		E=52.3% for d_{pa} < 3μmA. Air/cloth =3.1 m/min.	
Rice drying	Rice dryer		PM Scrubber Calvert Collision Scrubber	11,113/m^3/s 1,408/m^3/s 3,216/m^3/s	94.0		2	7.9kW/m^3/s		E=75% for d_{pa} < 3μmA. Δp = 38 cm W.C.	
Rice drying	Rice dryer		PM Scrubber Venturi	28,952/m^3/s 2,802/m^3/s 7,514/m^3/s	86.0		2	20kW/m^3/s		E=44% for d_{pa} < 3μmA. Δp = 117 cm W.C. Higher efficiency is not feasible.	

TABLE 9.7-3

CONTROL TECHNOLOGY FOR STATIONARY SOURCES OF AIR POLLUTION

INDUSTRY: Food and Agriculture

SECTION:

PROCESS	EMISSION SOURCE	PL	CONTROL TECHNOLOGY	CAPITAL, OPERATING, ANNUALIZED COSTS, $	EFFY (%)	REL (%)	S	ENERGY USE	ENVIR IMPACT	REMARKS	REF
Barley drying	Grain elevator	PM	Filter	24,337/m^3/s 2,337/m^3/s 5,195/m^3/s	99.78		2	7.7kW/m^3/s		E=99.5% for d_{pa} < 3μmA. Air/cloth =0.93 m/min.	
Barley drying	Grain elevator	PM	Filter	19,045/m^3/s 1,914/m^3/s 4,151/m^3/s	98.3		2	7.9kW/m^3/s		E=97.3% for d_{pa} < 3μmA. Air/cloth =3.1 m/min.	
Barley drying	Grain elevator	PM	Filter	21,443/m^3/s 2,122/m^3/s 4,641/m^3/s	96.5		2	11kW/m^3/s		E=90% for d_{pa}<3μmA. Air/cloth=5.5 m/min.	
Barley drying	Grain elevator	PM	Scrubber Calvert Collision Scrubber	11,610/m^3/s 2,100/m^3/s 3,990/m^3/s	96.2		2	5.8kW/m^3/s		E=75% for d_{pa}<3μmA. Δp=26 cm W.C.	

TABLE 9.7-3

CONTROL TECHNOLOGY FOR STATIONARY SOURCES OF AIR POLLUTION

INDUSTRY: Food and Agriculture

SECTION:

PROCESS	EMISSION SOURCE	PL	CONTROL TECHNOLOGY	CAPITAL, OPERATING, ANNUALIZED COSTS, $	EFFY (%)	REL (%)	S	ENERGY USE	ENVIR IMPACT	REMARKS	REF
Barley drying	Grain elevator	PM	Scrubber	25,965/m^3/s	98.8		2	18.4kW/m^3/s		E=90% for d_{pa}<3μmA. Δp=100 cm W.C.	
			Calvert Collision Scrubber	3,358/m^3/s							
				7,583/m^3/s							
Barley drying	Grain elevator	PM	Scrubber Venturi	18,206/m^3/s	96.4		2	7.4kW/m^3/s		E=75% for d_{pa}<3μmA. Δp=40 cm W.C.	
				2,447/m^3/s							
				5,410/m^3/s							
Barley drying	Grain elevator	PM	Scrubber Venturi	23,638/m^3/s	98.7		2	12kW/m^3/s		E=90% for d_{pa}<3μmA. Δp=68 cm W.C.	
				2,923/m^3/s							
				6,770/m^3/s							

Table 9.7-4

CONTROL TECHNOLOGY FOR STATIONARY SOURCES OF AIR POLLUTION

INDUSTRY: Food and Agriculture

SECTION:

PROCESS	EMISSION SOURCE	PL	CONTROL TECHNOLOGY	CAPITAL, OPERATING, ANNUALIZED COSTS, $	EFFY (%)	REL (%)	S	ENERGY USE	ENVIR IMPACT	REMARKS	REF
Corn drying	Grain Elevator	PM	Filter	24,337/m^3/s 2,337/m^3/s 5,195/m^3/s	99.7		2	7.7kW/m^3/s		E=99.7% for d_{pa} < 3μmA. Air/cloth =0.93 m/min.	
Corn drying	Grain Elevator	PM	Filter	19,045/m^3/s 1,914/m^3/s 4,151/m^3/s	99.1		2	7.9kW/m^3/s		E=99.3% for d_{pa} < 3μmA. Air/cloth =3.1 m/min.	
Corn drying	Grain Elevator	PM	Filter	21,443/m^3/s 2,122/m^3/s 4,641/m^3/s	92.4		2	11kW/m^3/s		E=50.1% for d_{pa} < 3μmA. Air/cloth =5.5 m/min.	
Corn drying	Grain Elevator	PM	Scrubber Calvert Collision Scrubber	13,970/m^3/s 2,306/m^3/s 4,580/m^3/s	93.2		2	7.9kW/m^3/s		E=50% for d_{pa} < 3μmA. Δp= 38 cm W.C.	

Table 9.7-4

CONTROL TECHNOLOGY FOR STATIONARY SOURCES OF AIR POLLUTION

INDUSTRY: Food and Agriculture

SECTION:

PROCESS	EMISSION SOURCE	PL	CONTROL TECHNOLOGY	CAPITAL, OPERATING, ANNUALIZED COSTS, $	EFFY (%)	REL (%)	S	ENERGY USE	ENVIR IMPACT	REMARKS	REF
Corn drying	Grain Elevator	PM	Scrubber Venturi	18,206/m^3/s 2,447/m^3/s 5,410/m^3/s	93.1		2	7.4kW/m^3/s		E=50% for d_{pa} < 3μmA. Δp= 40 cm W.C.	

TABLE 9.7-5

CONTROL TECHNOLOGY FOR STATIONARY SOURCES OF AIR POLLUTION

INDUSTRY: Food and Agriculture

SECTION:

PROCESS	EMISSION SOURCE	PL	CONTROL TECHNOLOGY	CAPITAL, OPERATING, ANNUALIZED COSTS, $	EFFY (%)	REL (%)	S	ENERGY USE	ENVIR IMPACT	REMARKS	REF
Wheat drying	Grain Elevator	PM	Filter	24,337/m^3/s 2,337/m^3/s 5,195/m^3/s	99.7		2	7.7kW/m^3/s		E=99.5% for d_{pa} < 3μmA. Air/cloth = 0.93 m/min.	
Wheat drying	Grain Elevator	PM	Filter	19,045/m^3/s 1,914/m^3/s 4,151/m^3/s	98.7		2	7.9kW/m^3/s		E=97.6% for d_{pa} < 3μmA. Air/cloth =3.1 m/min.	
Wheat drying	Grain Elevator	PM	Filter	21,443/m^3/s 2,122/m^3/s 4,641/m^3/s	95.7		2	11kW/m^3/s		E=80.5% for d_{pa} < 3μmA. Air/cloth = 5.5 m/min.	
Wheat drying	Grain Elevator	PM	Scrubber Venturi	23,245/m^3/s 2,888/m^3/s 6,671/m^3/s	96.0		2	12kW/m^3/s		E=75% for d_{pa} < 3μmA. Δp = 66 cm W.C.	

TABLE 9.7-5

CONTROL TECHNOLOGY FOR STATIONARY SOURCES OF AIR POLLUTION

INDUSTRY: Food and Agriculture

SECTION:

PROCESS	EMISSION SOURCE	PL	CONTROL TECHNOLOGY	CAPITAL, OPERATING, ANNUALIZED COSTS, $	EFFY (%)	REL (%)	S	ENERGY USE	ENVIR IMPACT	REMARKS	REF
Wheat drying	Grain Elevator	PM	Scrubber Venturi	32,733/m^3/s 3,720/m^3/s 9,047/m^3/s	98.5		2	20kW/m^3/s		E=90% for d_{pa} < 3μmA. Δp = 115 cm W.C.	

TABLE 9.7-6

CONTROL TECHNOLOGY FOR STATIONARY SOURCES OF AIR POLLUTION

INDUSTRY: Food and Agriculture **SECTION:**

PROCESS	EMISSION SOURCE	PL	CONTROL TECHNOLOGY	CAPITAL, OPERATING, ANNUALIZED COSTS, $	EFFY (%)	REL (%)	S	ENERGY USE	ENVIR IMPACT	REMARKS	REF
Alfalfa drying	Dryer	PM	Scrubber Calvert Collision Scrubber	13,862/m^3/s 3,787/m^3/s 6,043/m^3/s	96.7		2	4.5kW/m^3/s		E=75% for d_{pa}< 3μmA. Δp = 18 cm W.C.	
Alfalfa drying	Dryer	PM	Scrubber Venturi	37,873/m^3/s 5,550/m^3/s 11,714/m^3/s	94.0		2	19kW/m^3/s		E=50% for d_{pa}< 3μmA. Δp = 110 cm W.C.	
Alfalfa drying	Dryer	PM	Filter	34,005/m^3/s 3,638/m^3/s 7,632/m^3/s	99.7		2	7.2kW/m^3/s		E=99.7% for d_{pa}< 3μmA. Air/cloth = 0.93 m/s.	
Alfalfa drying	Dryer	PM	Filter	29,727/m^3/s 3,318/m^3/s 6,809/m^3/s	97.3		2	7.7kW/m^3/s		E=82.1% for d_{pa}< 3μmA. Air/cloth = 3.1 m/min.	

TABLE 9.7-6

CONTROL TECHNOLOGY FOR STATIONARY SOURCES OF AIR POLLUTION

INDUSTRY: Food and Agriculture

SECTION:

PROCESS	EMISSION SOURCE	PL	CONTROL TECHNOLOGY	CAPITAL, OPERATING, ANNUALIZED COSTS, $	EFFY (%)	REL (%)	S	ENERGY USE	ENVIR IMPACT	REMARKS	REF
Alfalfa drying	Dryer	PM	Filter	32,314/m^3/s 3,541/m^3/s 7,337/m^3/s	94.6		2	11kW/m^3/s		E=62.4% for d_{pa}< 3μmA. Air/cloth = 5.5 m/min.	

TABLE 9.7-7

CONTROL TECHNOLOGY FOR STATIONARY SOURCES OF AIR POLLUTION

INDUSTRY: Food and Agriculture

SECTION:

PROCESS	EMISSION SOURCE	PL	CONTROL TECHNOLOGY	CAPITAL, OPERATING, ANNUALIZED COSTS, $	EFFY (%)	REL (%)	S	ENERGY USE	ENVIR IMPACT	REMARKS	REF
Cotton ginning	Battery condenser	PM	Filter	33,455/m^3/s 3,621/m^3/s 7,551/m^3/s	99.6		2	6.8kW/m^3/s		E=99.5% for d_{pa}< 3μmA. Air/cloth = 0.91 m/min.	
Cotton ginning	Battery condenser	PM	Filter	29,989/m^3/s 3,348/m^3/s 6,870/m^3/s	98.6			7.6kW/m^3/s		E=88.6% for d_{pa}< 3μmA. Air/cloth = 3.1 m/min.	
Cotton ginning	Battery condenser	PM	Filter	32,728/m^3/s 3,585/m^3/s 7,429/m^3/s	97.5			11kW/m^3/s		E=75.6% for d_{pa}< 3μmA. Air/cloth = 5.5 m/min.	
Cotton ginning	Battery condenser	PM	Scrubber Calvert Collision Scrubber	15,513/m^3/s 3,995/m^3/s 6,520/m^3/s	98.4			5.8kW/m^3/s		E=75% for d_{pa}< 3μmA. Δp = 25 cm W.C.	

TABLE 9.7-7

CONTROL TECHNOLOGY FOR STATIONARY SOURCES OF AIR POLLUTION

INDUSTRY: Food and Agriculture **SECTION:**

PROCESS	EMISSION SOURCE	PL	CONTROL TECHNOLOGY	CAPITAL, OPERATING, ANNUALIZED COSTS, $	EFFY (%)	REL (%)	S	ENERGY USE	ENVIR IMPACT	REMARKS	REF
Cotton ginning	Battery condenser	PM	Scrubber Venturi	24,654/m³/s 4,449/m³/s 8,461/m³/s	98.4			7.4kW/m³/s		E=75% for d_{pa}< 3μmA. Δp = 40 cm W.C.	

SECTION 9

REFERENCES

Agrotherm Division, Norman Pitt, Inc., 1980. Cotton Gin Trash Incinerator-Air Heat Project. P500-80-018, Caliifornia Energy Commission, Sacramento, California, 29 pp.

Annis, J. C., S. L. Lima, V. E. Headley, 1970. Evaluation of the Liquid Fat Injection Method of Controlling Alfalfa Dehydrator Effluent. Journal of the Air Pollution Control Association, 20:23:30.

Bethea, R. M., and P. R. Morey, 1977. Occupational Dust Exposures in West Texas Cotton Gins. American Industrial Hygiene Association, 38:284-294.

Brown, D. F., E. R. McCall, B. Piccolo, V. W. Tripp, 1977. Survey of Effects of Variety and Growing Location of Cotton on Cardroom Dust Composition. American Industrial Hygiene Association Journal, 38:107-115.

California Air Resources Board, 1980. Emission Inventory System Computer Data; Food and Agricultural Sources. Sacramento, California.

Cowherd, Jr., Chatten, 1971. Particle Emissions and Process Conditions at Representative Alfalfa Dehydrating Mills. American Dehydrators Association, Kansas City, Missouri, 38 pp.

Danielson, John A., editor, 1973. Air Pollution Engineering Manual, 2nd Edition. AP40, U.S. Environmental Protection Agency, Washington, D.C., 892 pp.

Farant, Jean-Pierre and C. F. Morre, 1978. Dust Exposures in the Canadian Grain Industry. American Industrial Hygiene Association Journal, 39:177-194.

Hardison, L.C., 1973. Air Pollution Control and Costs in Seven Selected Areas. EPA450/3-73-010, U.S. Environmental Protection Agency, Research Triangle Park, North Carolina, 707 pp.

Kuo, M.C.T., and P. E. Kyle, 1978. Overview of the Environmental Control Measures and Problems in the Food Processing Industries, Appendix 15, Grain Milling Industry. U. S. Environmental Protection Agency, Cincinnati, Ohio, 10 pp.

Lee, Jr., R. E., H. L. Grist, A. E. Riley, K. E. MacLeod, 1975. Concentration and Size of Trace Metal Emissions from a Power Plant, a Steel Plant, and a Cotton Gin. Environmental Science and Technology, 9:643-647.

McLouth, M. E. and H. J. Paulus, 1961. Air Pollution from the Grain Industry. Journal of the Air Pollution Control Association, 11:313-317.

Pendleton, H. M., 1966. Current Gin Trash Disposal Techniques In: Control and Disposal of Cotton-Ginning Wastes. U. S. Department of Health, Education and Welfare, Cincinnati, Ohio, 103 pp.

Roddy, W. J., 1978. Controlling Cotton Gin Emissions. Journal of the Air Pollution control Association, 28:637-638.

Sittig, Marshall, 1977. Particulates and Fine Dust Removal. Noyes Data Corp., Park Ridge, New Jersey, 605 pp.

Taback, H. J., A. R. Brienza, J. Marko, N. Brunetz, 1979. Fine Particle Emissions from Stationary and Miscellaneous Sources in the South Coast Air Basin. California Air Resources Board, Sacramento, California, 561 pp.

U. S. Department of Health, Education and Welfare, 1967. Control and Disposal of Cotton-Ginning Wastes. Cincinnati, Ohio, 103 pp.

Vandegrift, A. E. and L. J. Shannon, 1970. Handbook of Emissions, Effluents, and Control Practices for Stationary Particulate Pollution Sources. National Air Pollution Control Association, Cincinnati, Ohio, 607 pp.

Wesley, R. A., J. D. Hatcher, O. L. McCaskill, and J. B. Cocke, 1978a. Dust Levels and Particle Size Distributions in High Capacity Cotton Gins. American Industrial Hygiene Association Journal, 39:368-384.

Wesley, Richard A., and James H. Wall, 1978b. Levels and Chemical Composition of Cotton Gin Dust. American Industrial Hygiene Association Journal, 39:962-975.

SECTION 10

METALLURGICAL SOURCES

10.1 INTRODUCTION

Emissions from processes in the metallurgical industries are often in the fine particle range. Emissions from furnaces are largely submicron. In addition these emissions contain elements, such as lead and coal tars, which are known to be toxic.

The following metallurgical operations are major sources of fine particles in California, based on EIS data (California Air Resources Board, 1980):

1. Coke Manufacture
2. Primary Iron and Steel
   a. Sintering
   b. Blast Furnace
   c. Open Hearth Furnace
   d. Basic Oxygen Furnace
   e. Scarfing
3. Steel Foundries
   a. Electric Arc Furnace
   b. Galvanizing
4. Brass/Bronze Furnaces
5. Secondary Lead Furnaces
6. Secondary Zinc Furnaces

10.2 COKE MANUFACTURE

10.2.1 Process Description

The purpose of coking is to remove the volatile compounds from bituminous coal by destructive distillation. The method most commonly used for coking is known as the by-product process and is described by Camp et al. (1951). Volatile compounds are recovered as gas and coal chemicals. About 40% of the recovered gas is burned to produce the heat necessary for distillation. The remainder of the recovered by-product is used for other purposes. In older processes, heat was produced by burning the volatiles within the coking chamber, as they were driven off.

The coke oven consists of a battery of coking chambers which are separated from each other by heating chambers. Hot air is circulated through the heating chambers and the heat is transferred through the walls and into the coking chambers.

The coking chambers are long slots which have openings at the top, through which coal is charged from a moveable larry car. The openings are sealed when charging is complete. The volatiles driven off during the coking process pass through another opening in the top of the chamber and into a collection main.

The coking chamber has openings at both ends which are sealed during the coking process. When the coking is completed, the doors are removed and a machine pushes the coke out of the chamber, through guides, into a quenching car. The quenching car is similar to a box car. When full it is transported to a quenching tower, where the coke is cooled with water sprays. Figure 10.2.1-1 shows various components of the coke oven.

10.2.2 Source Characteristics

Emissions occur during charging, pushing, and quenching. In addition, leaks can occur from a poorly sealed door. Pushing and charging produce the most particulate emissions (Air Pollution Control Association, 1979).

Figure 10.2.2-1 shows the size distribution for coke oven charging emissions. Figure 10.2.2-2 shows particle size distribution for a coke oven pushing operation. The particles are collected by an exhaust hood over the quench car and a scrubber is used for control.

Emissions during the pushing process will vary according to the amount of volatile gases remaining in the coke. A green push occurs when the volatiles have not been completely driven off. Refer to Table 10.2.2-1 for a comparison of the particle mass concentration for clean and green pushes.

Tables 10.2.2-1 and 10.2.2-2 give the particle and gas characteristics for coke ovens.

10.2.3 Control Technology

Charging emissions can be controlled by using steam aspirators to draw the gas into the collection mains. Stage charging is a process modification in which the hoppers are unloaded in a specific order and at a controlled rate, so that there is always a gas passage to the collection main. It is also important that the connection from the larry car to the coke oven is leak tight. These methods are discussed in detail by Air Pollution Control Association (1979).

Closed charging systems have been developed in which the coal is conveyed to the charging ports by a closed pipe. A scrubber mounted on the larry car has also been used accoding to Minicucci et al. (1980), but maintenance problems have occurred.

Pushing emissions are controlled by various methods. The coke side of the battery can be enclosed by a shed which is evacuated through a control device. According to Jutze et al.(1977), the capture efficiency of shed evacuation is between 85-90%. Electrostatic precipitators or wet scrubbers, with collection efficiencies of 98-99%, are used as control devices.

Enclosures or hoods on the quenching car have also been used. Performances similar to a shed can be obtained with careful design. Enclosures result in less gas volume to be cleaned than do hoods.

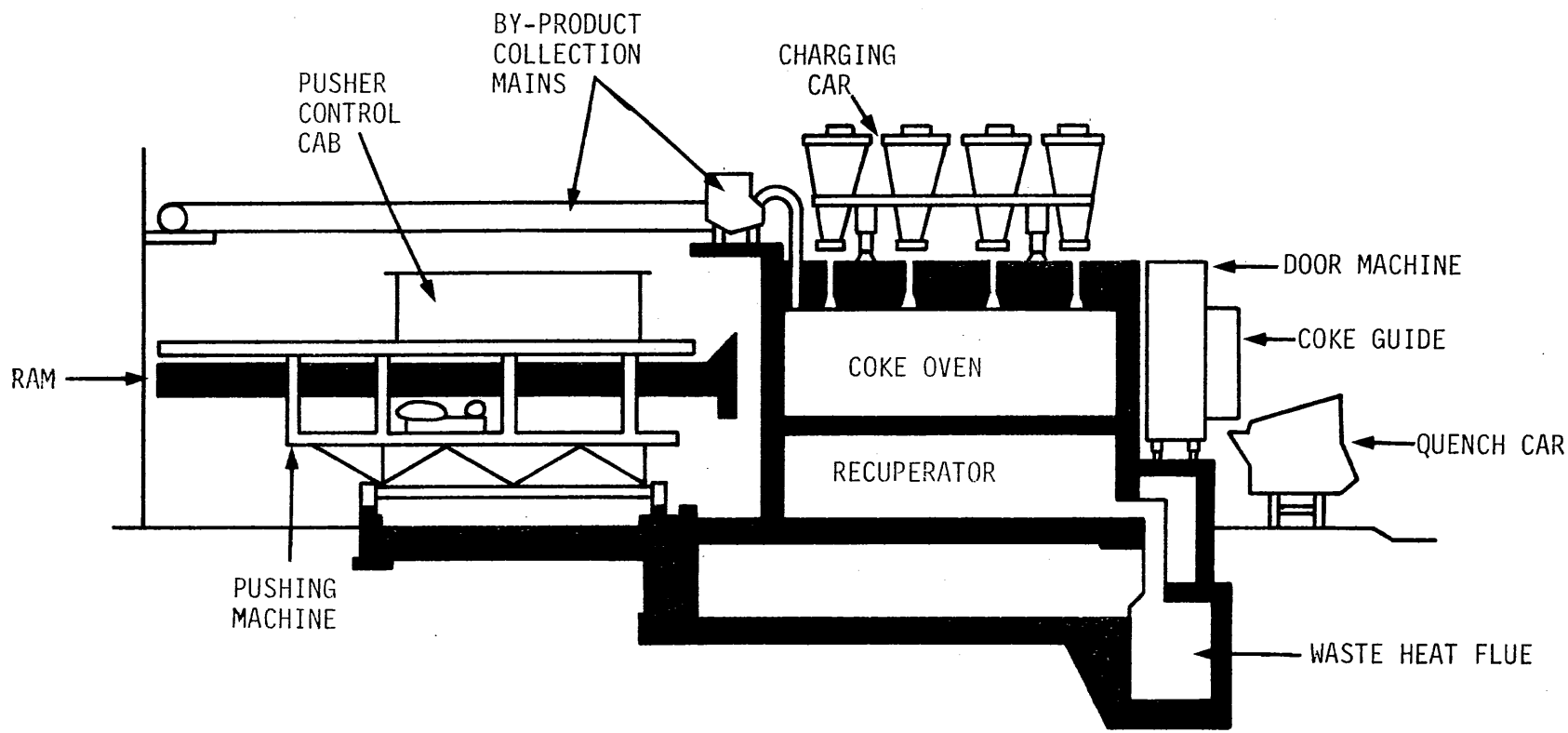

Figure 10.2.1-1. Coke oven (Jacko, 1979).

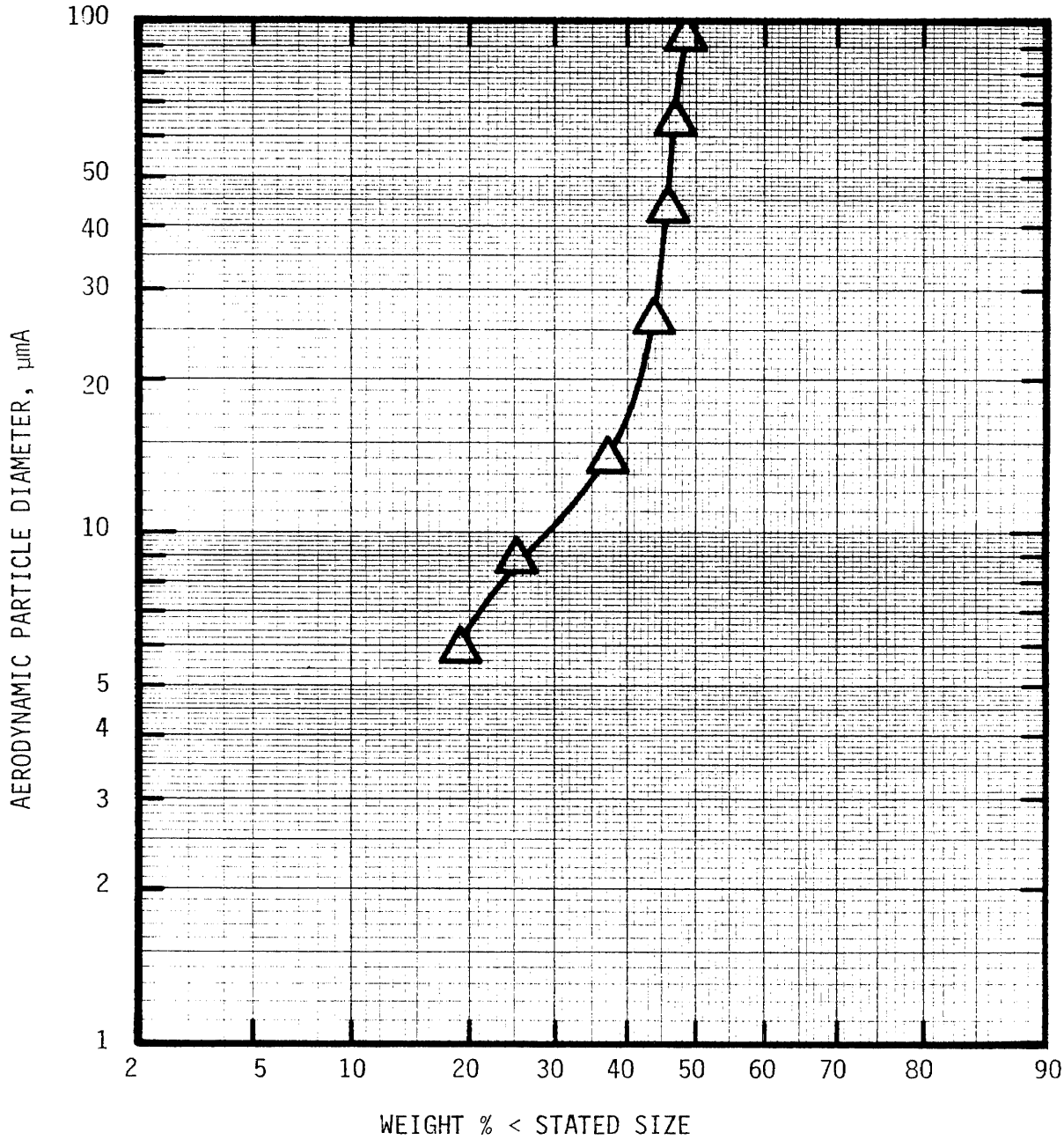

Figure 10.2.2-1. Coke oven charging particle size distribution (Bee et al., 1974).

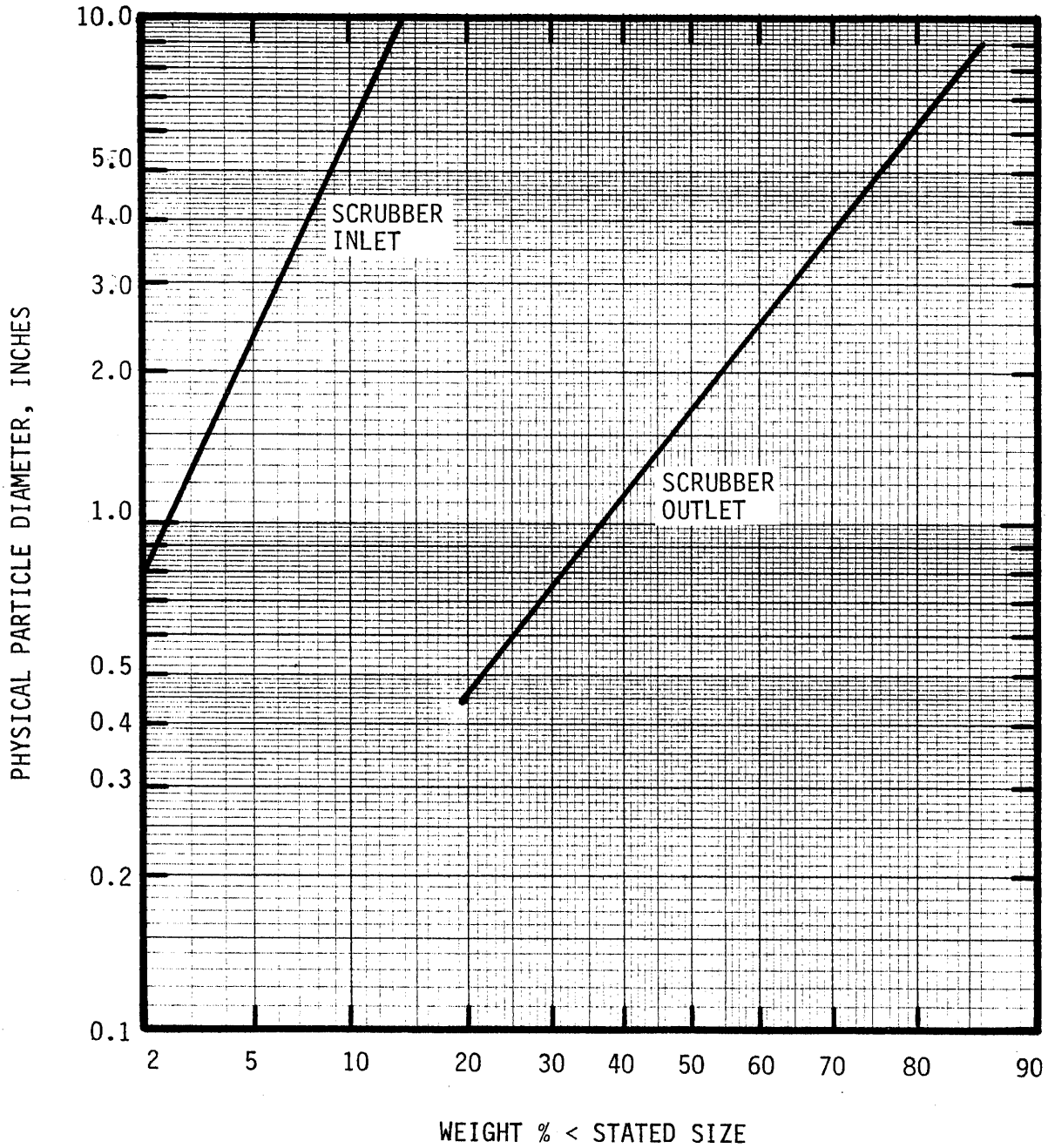

Figure 10.2.2-2. Coke oven pushing particle size distribution (Cooper et al., 1977).

TABLE 10.2.2-1. COKE OVEN PARTICLE CHARACTERISTICS

Mass Concentration, mg/Nm³

Process	Uncontrolled Total	Uncontrolled <3 μmA	Controlled Total	Controlled <3 μmA	Particle Density g/cm³	Particle Resistivity ohm-cm
Charging	2,300-3,400[a]					
Pushing-Clean	70-5,000[b]					
Pushing-Green	220-16,000[b]					

[a]Vandegrift et al. (1971)

[b]Jacko (1979)

TABLE 10.2.2-2. COKE OVEN GAS CHARACTERISTICS

Process	Production Rate	Gas Flowrate Nm^3/kg (unless otherwise noted)	Temperature °C	Chemical Composition, % vol, dry (unless otherwise noted)
Charging		65 Nm^3/charge[a]		CO_2 2.2[a]
				O_2 0.8
				N_2 8.1
				CO 6.3
				H_2 46.5
				CH_4 32.1
				C_2H_6 3.5
				C_2H_6 0.8
Pushing-Clean		90 Nm^3/s[b*]	20-80[b]	
Pushing-Green		90 Nm^3/s[b*]	40-280[b]	

[a]Vandegrift et al. (1971)
[b]Jacko (1979)

*Average value; in open atmosphere.

A spray, charging and trapping scrubber (SCAT) which uses air curtains to contain the push plume and direct it into a portable scrubber is being developed. The use of air curtains will allow easier access by the workers to the ovens according to Yung et al. (1981).

An important process control is the reduction of green pushes. A green push greatly increases the load on the collection and control system according to Jacko (1979).

10.3 PRIMARY IRON AND STEEL

10.3.1 Process Descriptions

The production of iron and steel involves many processes as shown in Figure 10.3.1-1. The production of coke has been discussed in the previous section, 10.2. Discussion in this section will cover the following processes:

1. Sintering
2. Iron Blast Furnace
3. Open Hearth Steel Furnace
4. Basic Oxygen Steel Furnace
5. Scarfing

10.3.1 Process Descriptions

10.3.1.1 Sintering

The sintering process converts iron ore fines, blast furnace flue dust, and mill scale into a product which is charged into the blast furnace. Coke breeze (the fines from coke), and a limestone flux are mixed with these iron-bearing residues and the mixture is fed onto a traveling grate, according to Camp et al. (1951).

The coke breeze is ignited in an oil or gas fired ignition furnace. Combustion is maintained by a downdraft of air through the porous bed of the mixture. The space under the bed is divided into compartments, known as wind boxes, which maintain a uniform distribution of the combustion air. This process heats the mixture to the temperature at which the iron bearing particles fuse into larger agglomerates. These are then crushed, screened, and cooled prior to being used to charge the blast furnace.

10.3.1.2 Blast Furnace

The blast furnace is a large upright cylinder called a cupola, as shown in Figure 10.3.1.2-1. Iron bearing materials, coke, and limestone and dolomite flux are charged into the top of the furnace. Hot, compressed air is blown in at the bottom of the furnace through tuyeres. The charge descends downward, with the products collecting at the bottom. The gases are exhausted out the top.

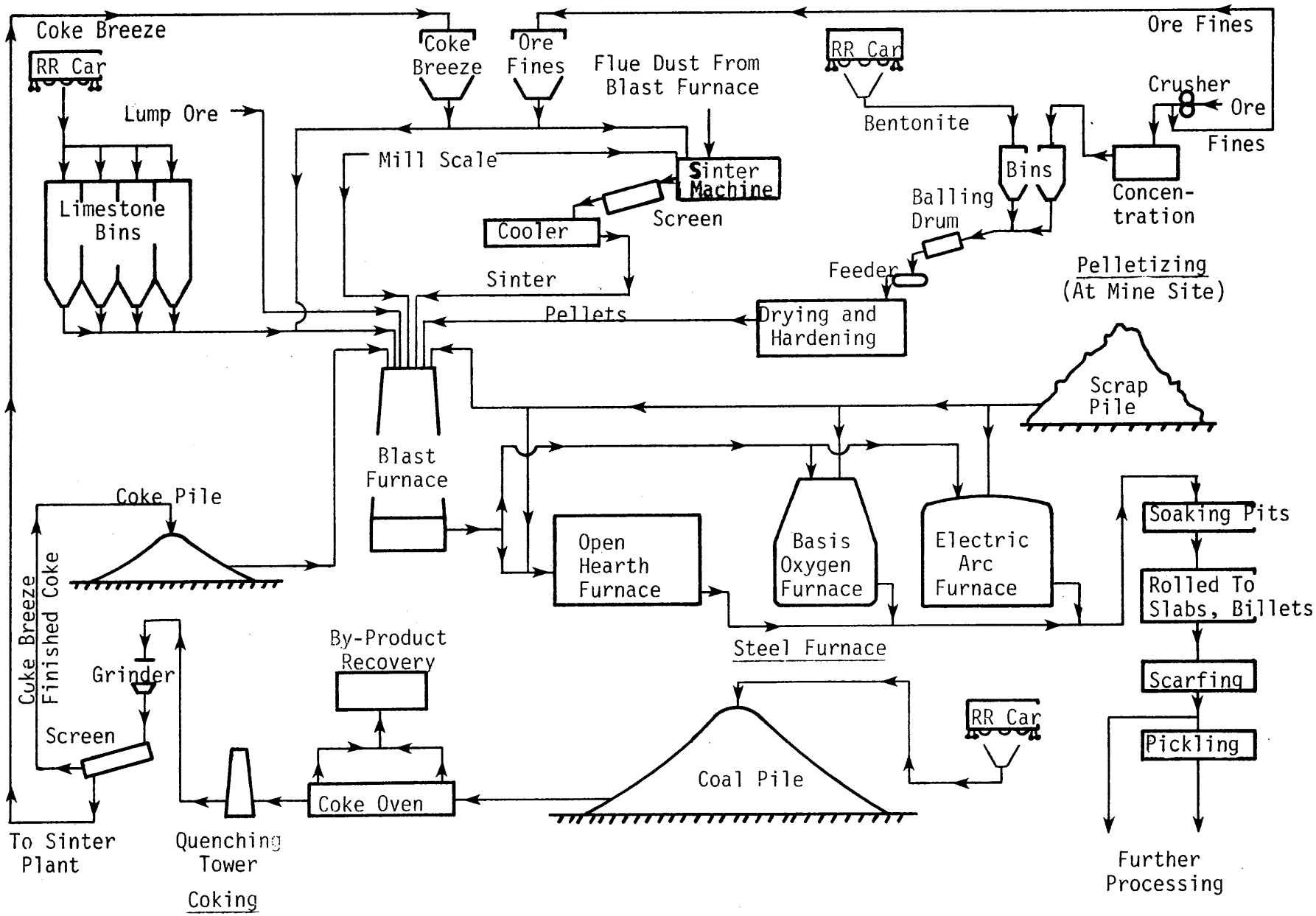

Figure 10.3.1-1. Flow diagram for a steel plant (Vandegrift et al., 1970).

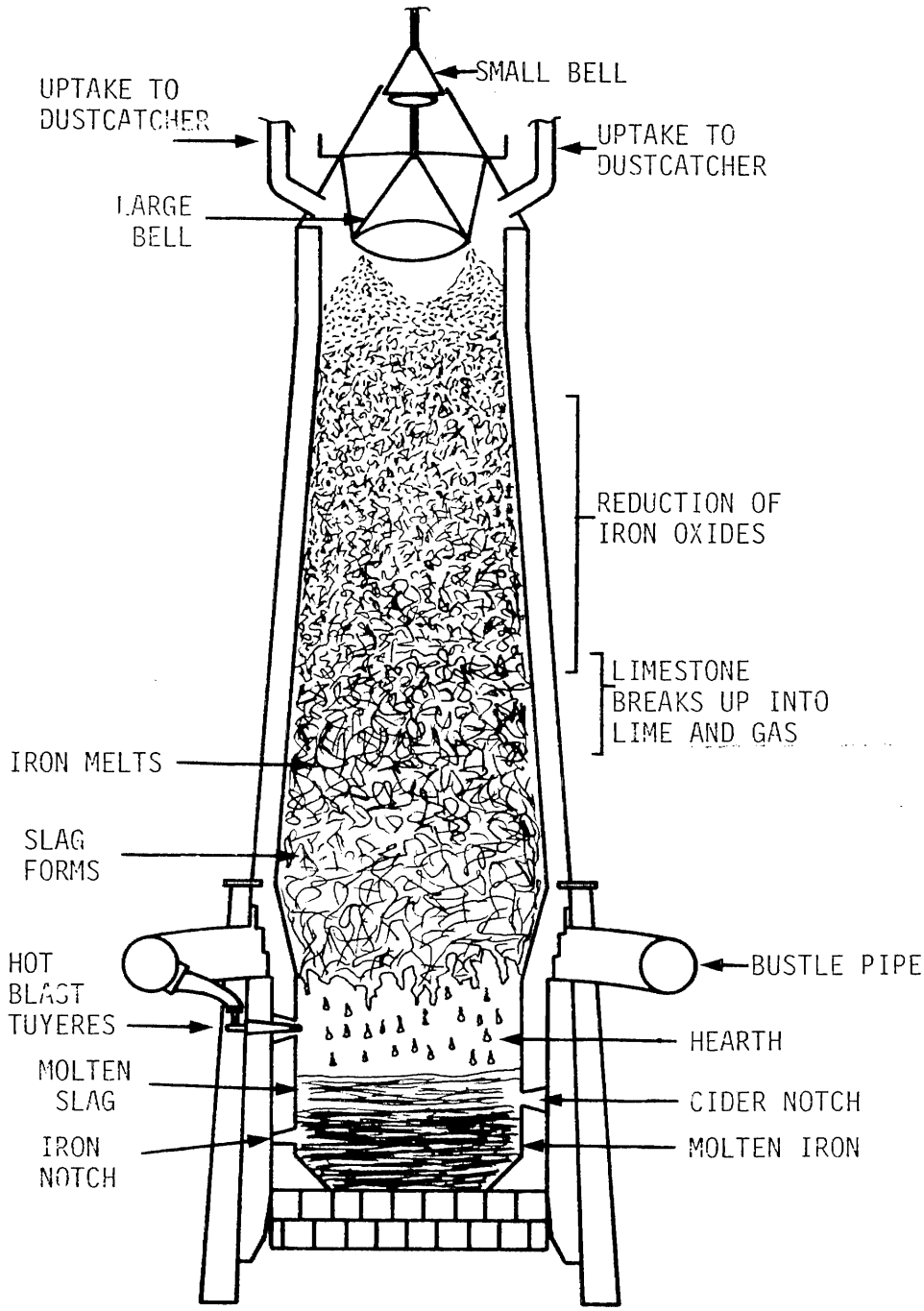

Figure 10.3.1.2-1. Iron blast furnace (May, 1977).

The combustion of the coke supplies the heat necessary for melting and reduction of the iron. The carbon in the coke accounts for about 20% of the reduction in the furnace. The remaining 80% is due to CO which forms from the coke and the blast air. The molten iron forms a pool in the bottom of the furnace. The flux oxidizes the metalloids (sulphur, silicon and phosphorous) and forms a slag which floats on top of the molten iron.

The gases leaving the top of the furnace typically go to an afterburner to combust the remaining CO. Heat recuperators or steam boilers are used in some installations to recover some of the heat from the flue gas. The ingoing blast air may be compressed by steam driven compressors and then heated in the heat recuperators to 1,000°C-1,250°C before being blown through the tuyeres.

Uncontrolled emissions occur when the molten metal is tapped. As the metal flows through the runner to the ladle, it cools and gives off graphite particles known as kish. The kish particles are light and flaky but large enough to settle out, which causes additional dust control problems due to reentrainment. Iron oxide particles are also emitted during tapping.

10.3.1.3 Open Hearth Furnace

The hearth of an open hearth furnace is a shallow rectangular basin enclosed by walls and roof, both made of refractory material. A cross-section of the hearth is shown in Figure 10.3.1.3-1. The process is described by Camp et al. (1951). Limestone is charged into the hearth first. Pig iron, steel scrap, and iron ore are added in varying amounts. This charge is known as the heat and is melted by a flame which travels the length of the furnace, above the charge. The flame is produced by the combustion of fuel which can include coke oven or natural gas, oil tar, or pitch.

At a certain stage in the melting process, molten pig iron is added. At this point oxygen lancing is begun. Oxygen lancing is the use of high velocity streams of pure oxygen to aid in the decarbonization of the molten metal.

Dust emissions vary from stage to stage within the cycle and according to operating conditions and the type of charge used. Table 10.3.1.3-1 shows particle mass concentrations for various stages of steel making. Notice especially the increase in emissions due to oxygen lancing.

10.3.1.4 Basic Oxygen Furnace

The basic oxygen furnace is a pear shaped vessel with a refractory lining which can be rotated about a horizontal axis. The top of the vessel is open, and when it is in the upright position the gas is exhausted through a water cooled hood.

The furnace is tipped about 45° from the upright position

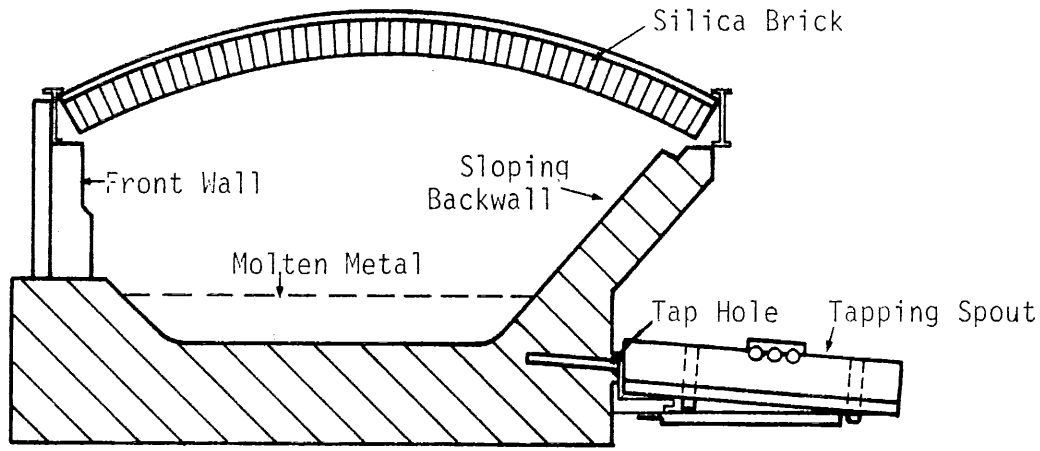

Figure 10.3.1.3-1. Open hearth furnaces, cross section (Camp et al., 1951).

when it is charged. Figure 10.3.1.4-1 shows this process, and the emissions which occur. The charge consists of molten metal, steel scrap, and flux materials. The particle emissions are primarily graphite particles emitted from the molten metal as it contacts the scrap. Emissions vary with the type of scrap being used according to Caine (1977), but the degree of variation has not been determined.

After charging, pure oxygen is forced below the surface by a water cooled lance. This process is known as blowing. No external heat is required to melt the scrap and refine the steel. Heat is supplied by the molten metal and the exothermic reactions between the oxygen and the metalloids (carbon and silicon) in the charge. The amount of steel scrap is limited to 30% of the charge.

The time required for each cycle, or batch of steel, in the basic oxygen furnace is 30-60 minutes. The open hearth process can require up to 10 hours for one cycle. However, the basic oxygen furnace requires a much larger quantity of molten metal.

The emissions include silica particles and submicron iron oxide particles. When the carbon begins to oxidize, excess air is often added to the exhaust gas to reduce the CO concentrations.

10.3.1.5 Scarfing

Ingots of cast steel are rolled into shapes known as slabs, billets, or blooms which are rectangles, squares, or rounds of various dimensions. Surface defects must then be removed before further milling is done. This is accomplished by the process of scarfing in which jets of oxygen are directed at the heated steel. A scarfing machine removes about 0.3 cm (1/8 in.) of metal from four sides of slabs, blooms, or billets as they pass through it, according to Camp et al. (1951). This process is similar to cutting metal with a torch.

10.3.2 Source Characteristics

Particle size distributions for sintering emissions are shown in Figure 10.3.2-1. Figure 10.3.2-2 shows size data from the cast house of a blast furnace which was reported by McCrillis (1978). The data was taken in the Soviet Union and the method of measurement is not known.

Figures 10.3.2-3 and 10.3.2-4 show particle size distribution data for open hearth and basic oxygen furnaces, respectively. Size distribution data was not obtained for scarfing. Table 10.3.2-1 shows a chemical analysis of sinter dust. Tables 10.3.2-2 and 10.3.2-3 show chemical compositions for open hearth and basic oxygen furnaces.

Particle characteristics for the primary iron and steel processes are shown in Table 10.3.2-4. Table 10.3.2-5 shows the gas characteristics.

TABLE 10.3.1.3-1. VARIATION OF PARTICLE MASS CONCENTRATION IN OPEN HEARTH STEELMAKING[a]

Stage of Operation	Loading g/Nm³	Gas Flow Rate, Nm³/min
Melt Down	1.8	1700
Hot Metal Addition	4.3	1820
Lime Boil	6.2	1880
Oxygen Lancing	11.4	-
Refining	0.5	1820

[a]Vandegrift et al. (1970)

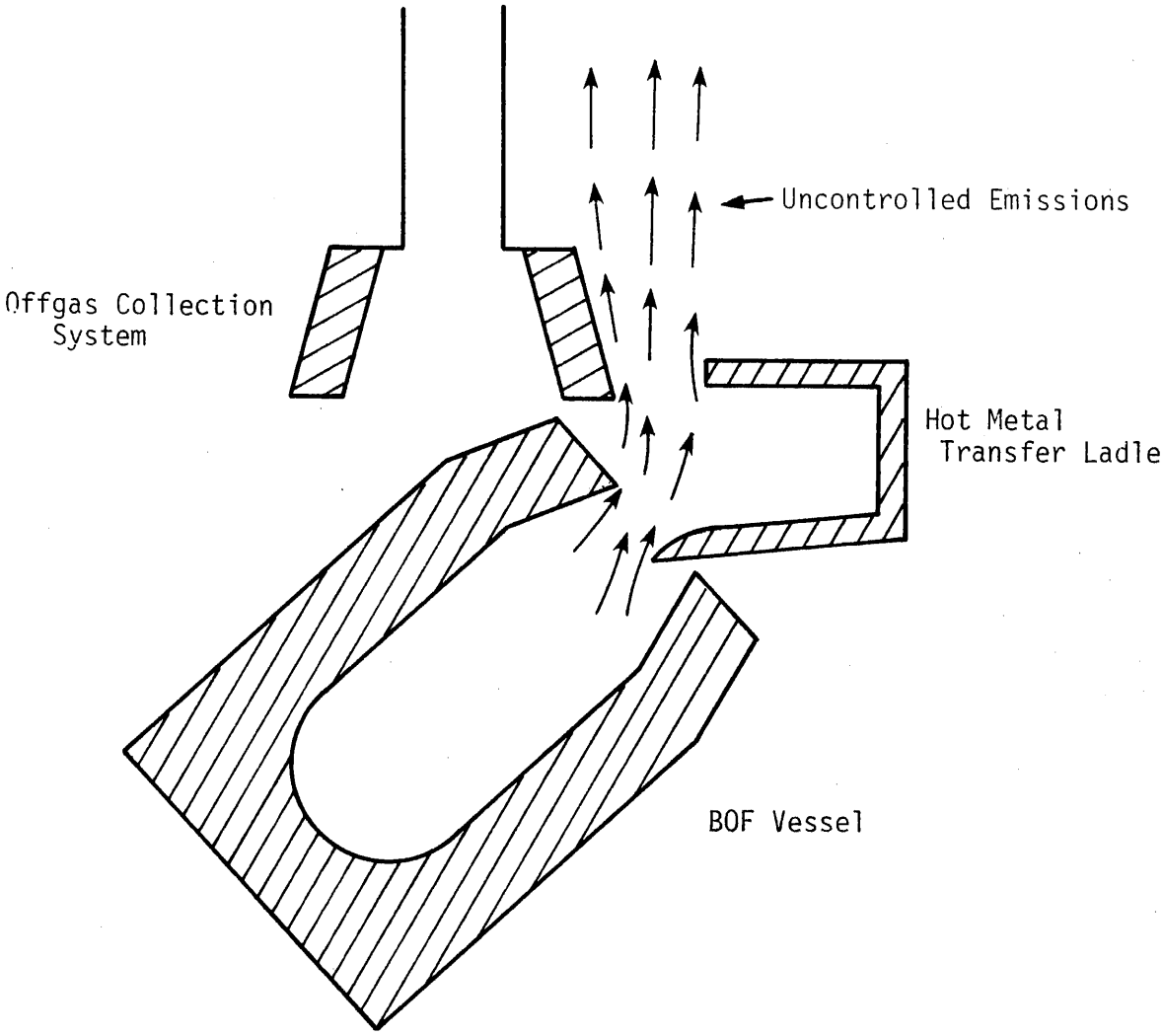

Figure 10.3.1.4-1. Basic oxygen furnace, charging (Caine, 1977).

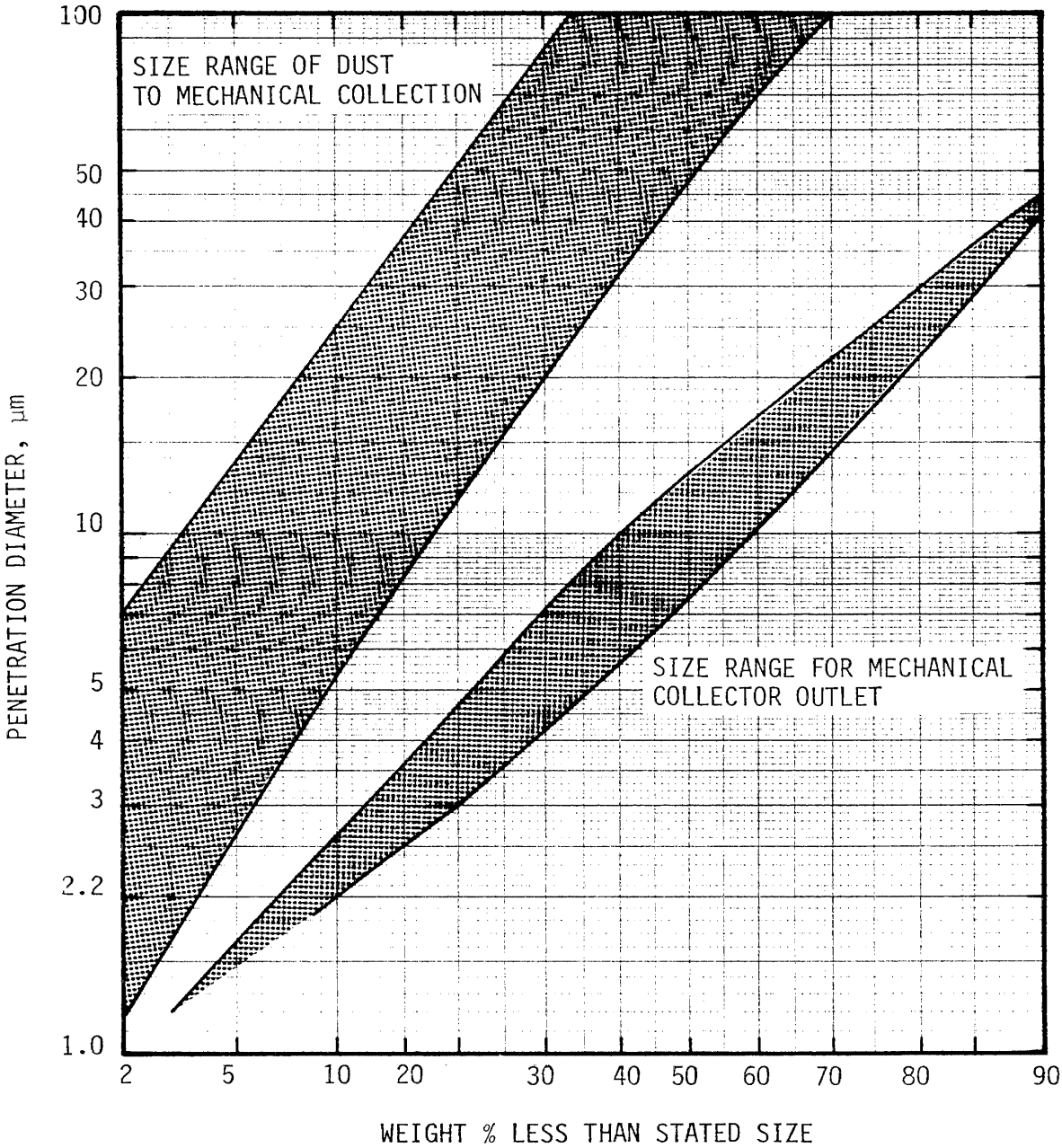

Figure 10.3.2-1. Particle size distribution, sinter machine windbox (Oglesby, 1970).

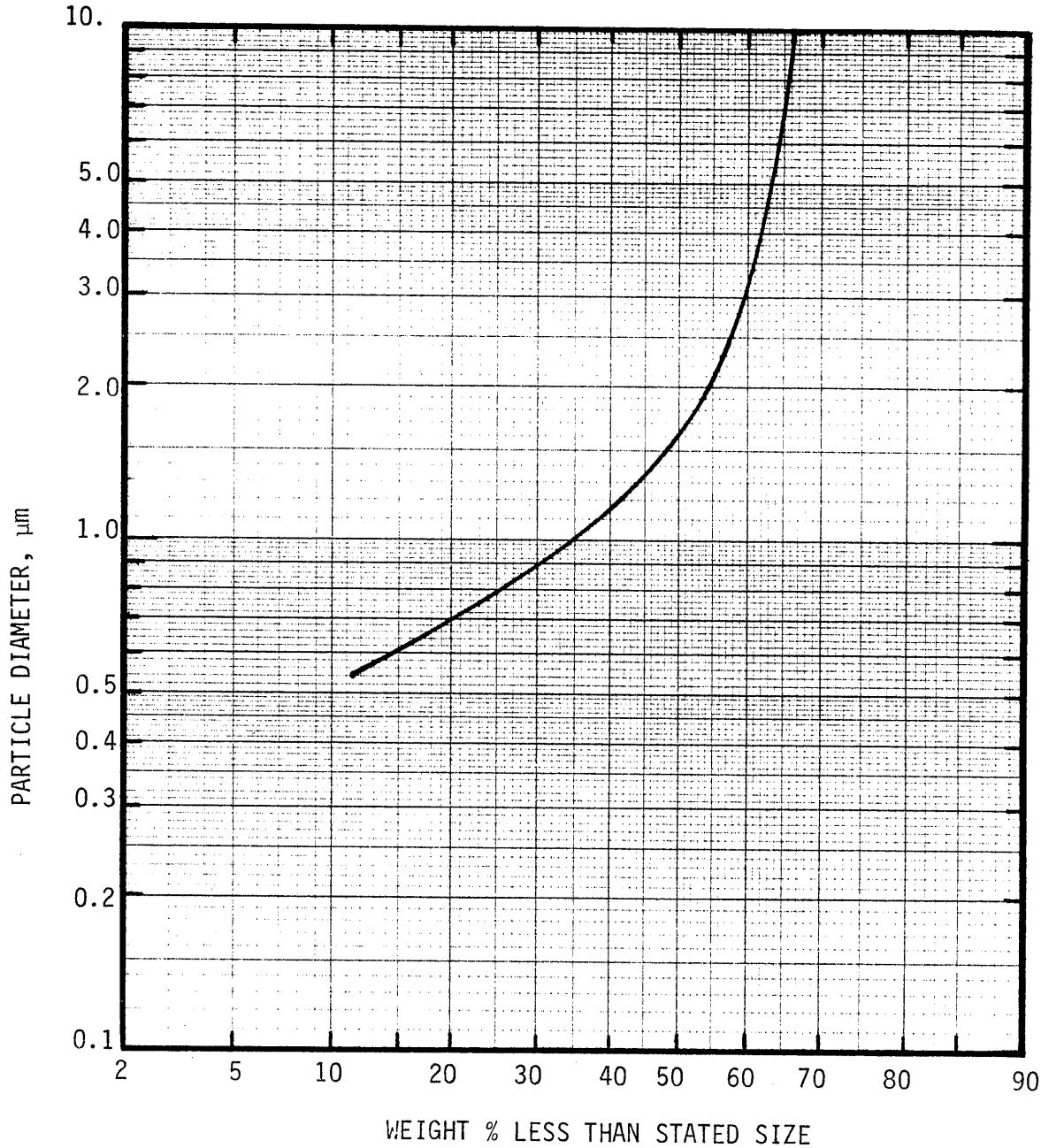

Figure 10.3.2-2. Particle size distribution, blast furnace casthouse emissions (McCrillis, 1978).

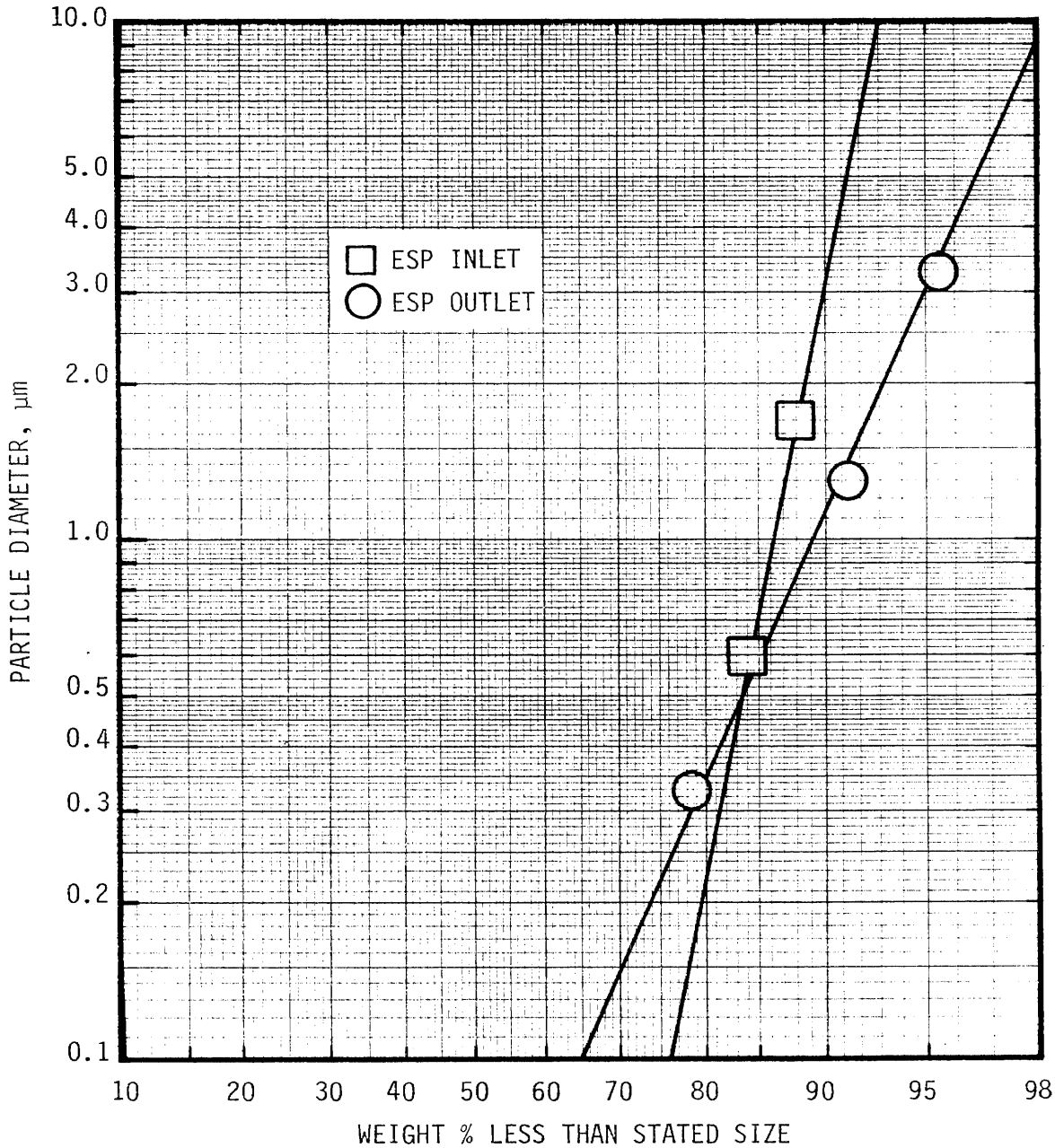

Figure 10.3.2-3. Particle size distributions, open hearth furnace (Taback et al., 1979).

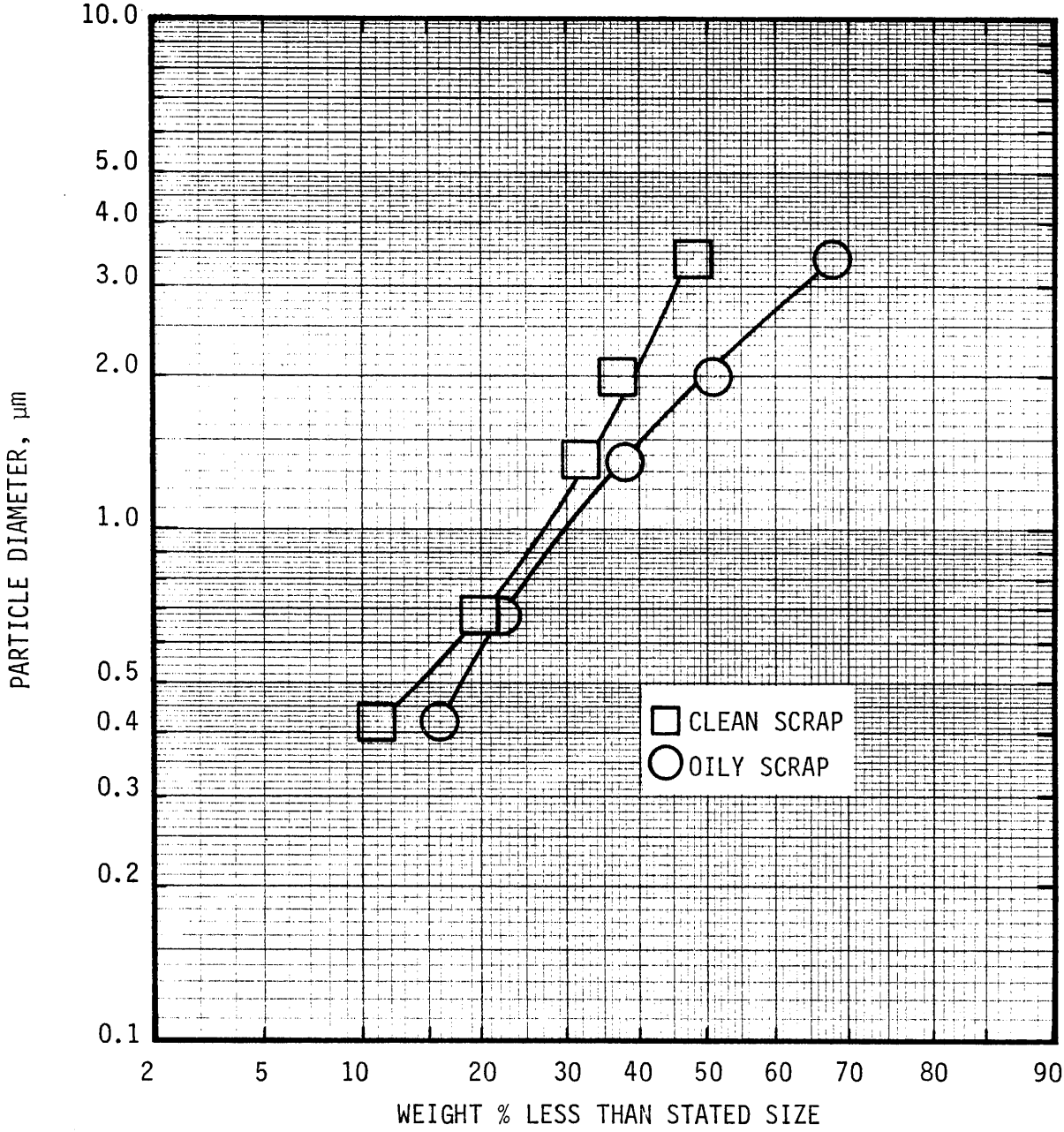

Figure 10.3.2-4. Particle size distributions, basic oxygen furnace, charging (Caine, 1977).

TABLE 10.3.2-1. SINTER DUST CHEMICAL ANALYSIS[a]

Component	Weight %
CO_2	<1-4
MgO	1-6
SiO_2	7-10
Fe_3O_4 & Fe_2O_3 (Chiefly Fe_3O_4)	71-77
So_3	3-4

[a]Steelhamer et al. (1977)

TABLE 10.3.2-2. STEEL OPEN HEARTH FURNACE PARTICLE ELEMENTAL ANALYSIS[a]

All Numbers in Weight Percent

	Composite	<1 μm	1-3 μm	3-10 μm	>10 μm
Calcium					2
Carbon	20	20	20	20	20
Chromium	2	2			
Iron	11	10	15	16	18
Potassium	5	5	4	3	3
Sulfates	40	40	38	35	33
Other (Si, O_2, Al, Mg, N_2, H_2, F)	22	23	23	26	24
Total	100	100	100	100	100
Wt % of Composite in each size range	100	88	7	4	2

[a]Taback et al. (1979)

TABLE 10.3.2-3. BASIC OXYGEN FURNACE CHARGING PARTICLE CHEMICAL COMPOSITION[a]

Scrap Type	Clean	Galvanized	Oily	No. 2 Bundles*	Avg.
		composition, %			
Al_2O_3	2.2	1.7	2.1	2.1	2.0
C	34.3	60.3	37.8	41.5	41.6
CaO	3.5	2.0	2.9	1.7	2.7
Fe	13.1	3.3	11.3	3.8	8.9
FeO	12.7	8.3	16.7	17.6	13.6
Fe_2O_3	8.3	12.7	10.6	10.5	10.0
K_2O	0.2	0.1	0.1	0.1	0.1
MgO	1.0	0.5	0.7	0.5	0.7
MnO	0.5	0.3	0.6	0.6	0.5
Na_2O	0.3	0.1	0.1	0.2	0.2
PbO	0.3	0.2	0.8	1.8	2.3
SO_4	-	-	0.06	0.15	0.04
S_1O_2	5.2	2.6	3.0	2.8	3.8
ZnO	3.4	5.3	8.1	12.0	6.4

* Sheet scrap, can include galvanized scrap.

[a]Caine (1977)

TABLE 10.3.2-4. PRIMARY IRON AND STEEL PROCESSES, PARTICLE CHARACTERISTICS

Process	Mass Concentration, mg/Nm³ Uncontrolled Total	Uncontrolled <3 μmA	Controlled Total	Controlled <3 μmA	Particle Density g/cm³	Particle Resistivity ohm-cm
Sintering-Windbox	450-730[a]					1.5×10^{9}-5×10^{13}[a]
Sintering-Windbox with Wet ESP	9-5,800[b]		2-60[b]			
Sintering-Discharge End	2,300-11,400[a]					
Blast Furnace Cast House Controlled by Evacuation	16,000-23,000[c]		230-530[c]		3.4[a]	
Open Hearth Furnace with Oxygen Langing	450-16,000[a*] Avg 3,400	400-14,400[d**]	80[d+]	76[d**]	5.0-5.2[a]	1.0×10^{8}-8.0×10^{11}[a]
Basic Oxygen Furnace; Charging Clean Scrap	Avg 10,000[e]	4,500[e++]				
Charging Oily Scrap	Avg 27,000[e]	17,300[e++]				
Composite for the Heat	4,600-23,000[a]				3.44[a]	
Scarfing Machine	900-1,800[a]					

TABLE 10.3.2-4. PRIMARY IRON AND STEEL PROCESSES, PARTICLE CHARACTERISTICS (cont.)

Process	Mass Concentration, mg/Nm³ Uncontrolled Total	Uncontrolled <3 μmA	Controlled Total	Controlled <3 μmA	Particle Density g/cm³	Particle Resistivity ohm-cm
Scarfing Machine with Wet ESP Control	85-600[b]		2-60[b]			

[a]Vandegrift et al. (1971)
[b]Jaasund et al. (1975)
[c]May (1977)
[d]Taback et al. (1979)
[e]Caine (1977)

*Depends on stage of operation.
**Based on Figure 10.3.2-2.
+ESP controlled.
++Based on Figure 10.3.2-3.

TABLE 10.3.2-5. PRIMARY IRON AND STEEL PROCESSES, GAS CHARACTERISTICS

Process	Production Rate	Gas Flowrate Nm^3/kg (unless otherwise noted)	Temperature °C	Chemical Composition, % vol, dry (unless otherwise noted)
Sintering-Windbox		14-22 Nm^3/s[a]	40-200[a]	O_2 10-20[a] CO_2 4-10 CO 0-6 SO_2 0-0.4 N_2 69-86 H_2O 2-10
Sintering-Discharge		0.001-0.06 Nm^3/kg[a]	40-150[a]	
Blast Furnace-Cast House Evacuation	250-350 [b] per cast	150-163 Nm^3/s[b]	60-70[b]	
Blast Furnace-Exhaust Gas		18-67 Nm^3/s[a] 32-72 Nm^3/s[a]	200[a]	CO 21-42[a] CO_2 7-19 H_2 1.7-5.7 CH_4 0.2-3 N_2 50-60 Traces S, H_2S SO_2,0 H_2O 9.6
Open Hearth Furnace-with Oxygen Lancing		22-103 Nm^3/s[a]	200-1,100[a]*	CO_2 8-9[a] O_2 8-9 SO_2 2-5 ppm SO_3 100-200 ppm

TABLE 10.3.2-5. PRIMARY IRON AND STEEL PROCESSES, GAS CHARACTERISTICS, (cont.)

Process	Production Rate	Gas Flowrate Nm^3/kg (unless otherwise noted)	Temperature °C	Chemical Composition, % vol, dry (unless otherwise noted)
Open Hearth Furnace-with Oxygen Lancing (cont.)				N_2 Balance NO_x 500-800ppm H_2O 13-19
Basic Oxygen Furnace-Charging			up to 400[c]	N_2 70-76[c] O_2 10-19 CO_2 1.0-4.0 CO 0.5-4.0 H_2O 4-12[a]
Basic Oxygen Furnace-Composite for the heat		17-117 Nm^3/min[a]	300-1,650[a]	CO_2 0.7-13.5 CO 0-0.3 N_2 74.5-76.9 O_2 Balance (after combustion of CO)

[a]Vandegrift et al. (1970)

[b]May (1977)

[c]Caine (1977)

*Depending on use of waste heat boiler.

10.3.3 Control Technology

Much of the difficulty in controlling emissions from the metallurgical process is in containing the emissions. This is particularly true of emissions from charging and tapping.

The gas exhausting from the sinter machine windbox is well contained. However, the discharge end of the sinter machine, and the sinter cooler needs to be enclosed and ventilated according to Jutze et al. (1977). The emissions from the screening operation emissions can be collected by a fixed hood. Cyclones, baghouses, scrubbers and dry and wet ESP's are used as control devices. Minicucci et al. (1980) reported a gravel bed filter with partial recirculation of the gases to control windbox emissions.

An effective method of capturing emissions from charging, tapping and casting operations is total building evacuation according to Jutze et al. (1977). However, the flow rates are extremely high for this method. Fixed and moveable hoods are used over various emission points. These are enhanced by the use of curtains or partitions to contain the emissions.

Some basic oxygen furnaces and tapping areas are completely enclosed and evacuated. The charging emissions can be collected by the off gas collection system shown in Figure 10.3.1.4-1, if special hood designs are used, according to Caine (1977).

An air curtain could also be used to contain the emissions which would then be controlled by a spray, charging and trapping (SCAT) scrubber according to Yung et al. (1981).

The flue gas from basic oxygen furnaces is cleaned by high-efficiency scrubbers or ESP's, according to Hardison et al. (1972). Open hearth furnaces generally use ESP's, but scrubbers and baghouses have also been used.

Hooding is used to control emissions from scarfing according to Jutze et al. (1977). Cyclones, scrubbers and dry and wet ESP's are all used to collect the particles.

10.4 STEEL FOUNDRIES

10.4.1 Process Description

Fine particle emission sources in steel foundries include: furnaces, sand handling operations and galvanizing according to the EIS data (California Air Resources Board, 1980). Sand handling operations are discussed in section 11.8. Foundry furnaces and galvanizing are discussed here.

Foundries produce steel for casting from scrap iron and steel which has been melted. Various types of furnaces are used in foundries. In California foundries, the electric arc furnace is predominant according to the EIS data.

Figure 10.4.1-1 shows a basic diagram of a direct-arc furnace. The three electrodes are cylinders of baked carbon or graphite. The current passes from the electrode into the bath and back to a second electrode. In some designs the furnace

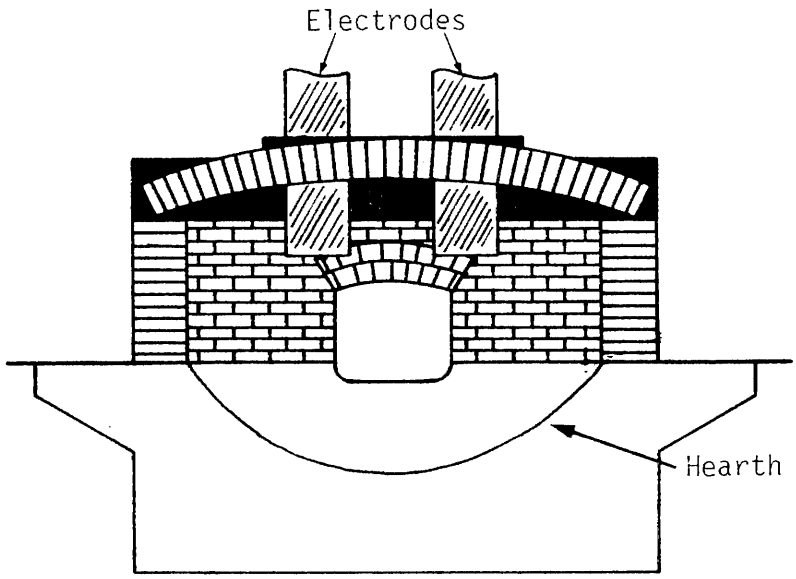

Figure 10.4.1-1. Electric arc furnace.

hearth also conducts the arc. Heat is generated by the arc and by the resistance effect of the bath according to Camp et al. (1951). As the electrodes are consumed within the bath, additional lengths are attached at the top and the electrodes are lowered.

The furnace roof, including the electrodes, is generally removed for charging and tapping. Some furnaces are charged from the side and are tipped with the roof in place during tapping.

Oxygen lancing is used in electric arc furnaces. Refer to Section 10.3.1.3 for a description of oxygen lancing.

Certain steel products are coated with zinc to protect them from corrosion. This process is known as galvanizing and involves degreasing, pickling, and applying a zinc coating to the steel. It is described by Danielson (1973).

After an article is degreased and pickled, it is immersed in molten zinc which has a flux floating on top. The flux is formed by the addition of ammonium foaming agents to the zinc. The hydrogen chloride gas, which forms in the flux, removes the oxide film from the steel as it is lowered into the tank. The article, while immersed, is moved to another section of the tank where there is no flux cover. The articles are then removed from the bath and, in some cases, dusted with powdered ammonium chloride to improve the finish.

10.4.2 Source Characteristics

Figure 10.4.2-1 shows particle size distribution curves for the inlet and outlet of a baghouse on an electric arc steel furnace, reported by Lee et al. (1975). Table 10.4.2-1 presents typical chemical analysis from electric arc furnace fume.

Table 10.4.2-2 gives particle characteristics for electric arc furnaces and Table 10.4.2-3 gives gas characteristics.

In galvanizing operations, emissions occur whenever the flux is disturbed. When articles are added some agitation results. The greater the agitation, the greater the fuming. Addition of flux also causes fuming. Emissions include ammonium chloride, zinc, zinc chloride, and oil. The emissions of zinc and zinc chloride are believed to be due to mechanical entrainment rather than vaporization. Improper degreasing results in emissions of oil mist. The diameter of the emissions from galvanizing are on the order of 2 μm, according to Danielson (1973).

10.4.3 Control Technology

Fumes from electric arc furnaces are captured by various methods. Direct shell evacuation (evacuation of the furnace itself) is one method used according to Jutze et al. (1977). Building evacuation and canopy hooding are also used, sometimes in combination with direct shell evacuation. Baghouses are the most common control device used. Venturi scrubbers and electrostatic precipitators are also used.

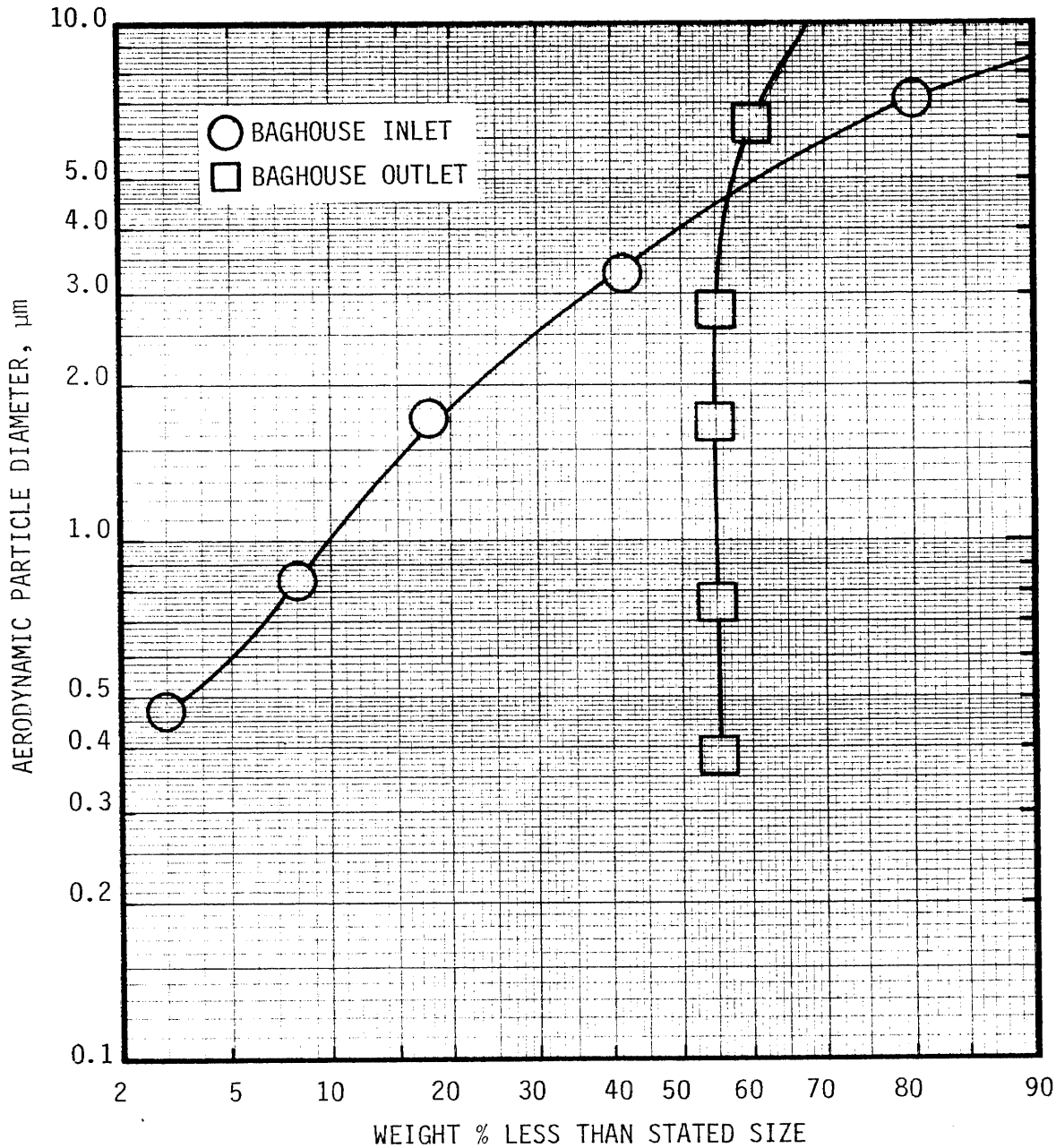

Figure 10.4.2-1. Particle size distributions for electric arc furnace (Lee et al., 1975).

TABLE 10.4.2-1. ELECTRIC ARC FURNACE FUME, CHEMICAL ANALYSIS[a]

Compound	Weight %
Total Iron	32.2
CaO	18.6
SiO_2	10.8
Total Carbon	8.3
MgO	7.1
Al_2O_3	5.7
Cr_2O_3	1.3
MnO	1.2
ZnO	1.03
V_2O_5	<1.
Total S	0.60
Na_2O	0.59
TiO_2	<0.50
F	0.49
K_2O	0.37
BaO	<0.20
Pb	0.15

[a]Szabo et al. (1978).

TABLE 10.4.2-2. STEEL FOUNDRY PARTICLE CHARACTERISTICS

Mass Concentration, mg/Nm³

Process	Uncontrolled Total	Uncontrolled <3 μmA	Controlled Total	Controlled <3 μmA	Particle Density g/cm³	Particle Resistivity ohm-cm
Electric Arc Furnace-No Oxygen Lance	230-5,000[a]				3.8-3.9[a]	
Electric Arc Furnace with Oxygen Lancing	2,300-2,300[a]				3.9-4.0[a]	
Electric Arc Furnace; Baghouse controlled	132[b]	48[b*]	0.14[b]	0.08[b*]		

[a]Vandegrift et al. (1971)

[b]Lee et al. (1975)

*Based on Figure 9.4.2-2.

**Depending on cooling method.

TABLE 10.4.2-3. STEEL FOUNDRY GAS CHARACTERISTICS

Process	Production Rate	Gas Flowrate Nm^3/kg (unless otherwise noted)	Temperature °C	Chemical Composition, % vol, dry (unless otherwise noted)
Electric Arc Furnace		50-500 Nm^3/s[a]	100-1,650[a]*	

[a]Vandegrift et al. (1971)

*Depending on cooling method.

Hooding is used to capture the fumes from galvanizing. Baghouses and ESP's are used for particles collection, according to Danielson (1973).

10.5 BRASS/BRONZE

10.5.1 Process Description

Brass and bronze are alloys of copper. Brass includes zinc and bronze includes tin. According to the EIS data (California Air Resources Board, 1980) three types of furnaces are most commonly found in the secondary brass and bronze industry in California. These are the reverberatory furnace, the rotary furnace and the electric induction furnace.

One style of reverberatory furnace is similar to the open hearth steel furnace described in Section 10.3.1. However, waste heat is not collected from the exhaust gases by checkers.

The rotary furnace is also a type of reverberatory furnace. It is a horizontal refractory lined cylinder with a burner at one end. The furnace rotates during the melting period, which improves the heat transfer to the metal. Rotary furnaces which can be tilted are charged at the burner end. Pouring is done from the end opposite the burner as shown in Figure 10.5.1-1. A side port is used in some furnaces for charging and tapping.

In an electric induction furnace, an alternating current flows through a coil. This current flow induces a current in the metal charge, causing the metal to heat and mix. Two designs are used according to Liddell (1945). In Figure 10.5.1-2, the copper coil surrounds the crucible which contains the charge. High frequency current is used in this type of furnace.

Figure 10.5.1-3 shows a low frequency, electric induction furnace. A coil surrounding a transformer is situated beneath the hearth. A melting channel surrounds the coil and is connected to the hearth. The hearth contains the main charge, however, heat is generated only in the melting channel. Due to the effect of the current, there is a constant flow of metal through the channel such that all of the material is rapidly melted.

The melting of brass produces more pollutants than melting pure copper or bronze. This is because the pouring temperature of brass is near the temperature at which the zinc vaporizes and forms oxides, according to Danielson (1973).

The major fine particle problem is due to the formation of zinc oxide particles, as they range from 0.03 to 0.30 μm diameter (physical). Lead oxides in the same size range are also emitted from many brass alloys.

Open flame furnaces (rotary and reverberatory) will produce higher emissions than electric furnaces. Temperature control is crucial. According to Danielson (1973), an increase of 38°C (100°F) in pouring temperature will increase the rate at which zinc oxidizes by a factor of three. The flux material which forms on top of the molten metal will control emissions of the

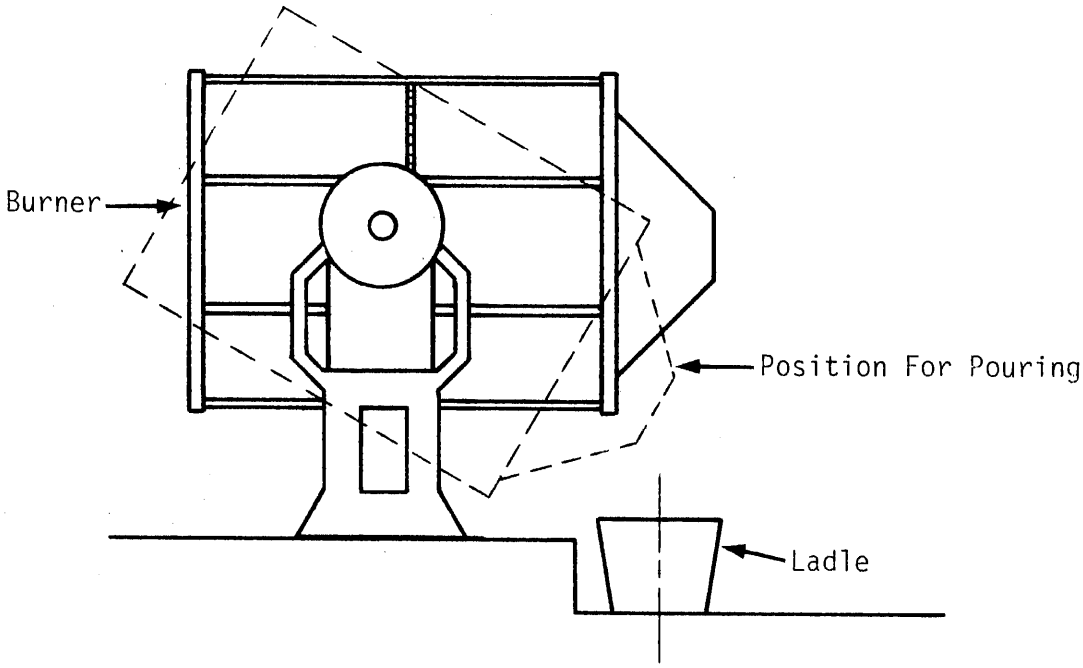

Figure 10.5.1-1. Rotary furnace.

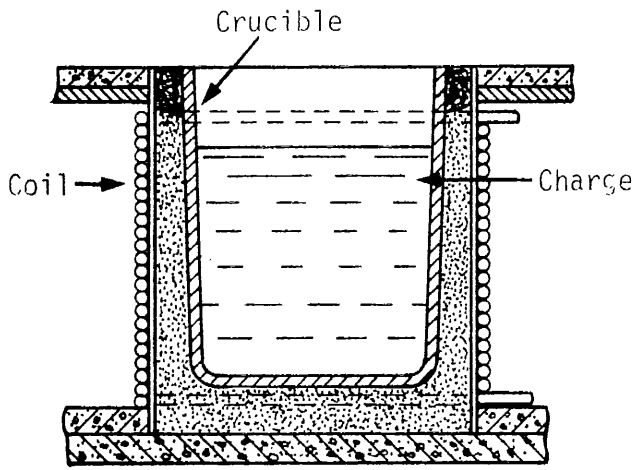

Figure 10.5.1-2. High frequency induction furnace (Liddell, 1945).

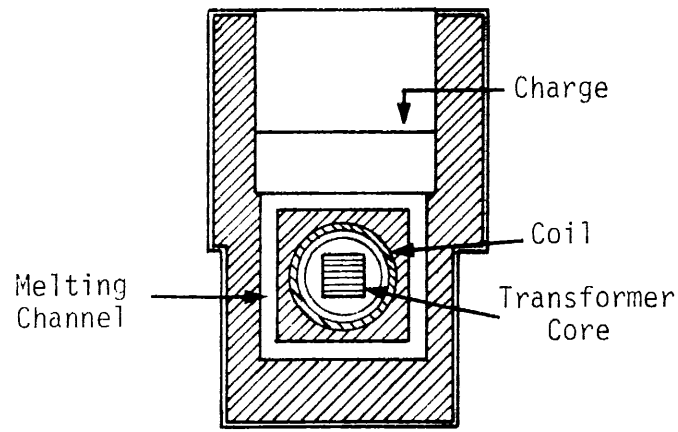

Figure 10.5.1-3. Low frequency induction furnace (Liddell, 1945).

oxide to some extent. Most emissions occur when the slag is not present, during charging, pouring, and when alloy is added after removal of the slag.

10.5.2 Source Characteristics

Figure 10.5.2-1 shows particle size distribution data for brass melting. The definition of equivalent spherical diameter was not given in the reference. Table 10.5.2-1 gives chemical analysis of a baghouse catch at a brass and bronze smelter.

Particle and gas characteristics for secondary brass and bronze furnaces are given in tables 10.5.2-2 and 10.5.2-3 respectively.

10.5.3 Control Technology

Maintaining the temperature of the melt as low as possible is effective for reducing emissions, especially during tapping. Hoods can be used to collect emissions from tapping and charging. The use of side curtains to contain the emissions will increase the capture efficiency of the hood, according to Jutze et al. (1977). Baghouses are used to collect the captured particles, according to Danielson (1973) and Minicucci et al. (1980).

10.6 SECONDARY LEAD

10.6.1 Process Description

Two types of furnaces are most common in California (California Air Resources Board, 1980). These are the pot furnace and the electric induction furnace. The electric induction furnace is described in Section 10.5.1.

The pot furnace consists of an iron or steel pot in which the charge is placed, according to Danielson (1973). The pot is heated by one or more burners, usually gas-fired. Capacities range from one to fifty tons. The pot furnace is used for melting, adding alloys and refining the lead.

Pot and induction furnaces release less contaminants than reverberatory furnaces, according to Danielson (1973).

10.6.2 Source Characteristics

Figure 10.6.2-1 shows size analysis of dust from a baghouse on a secondary lead smelting furnace. Tables 10.6.2-1 and 10.6.2-2 give particle and gas characteristics for secondary lead furnaces.

10.6.3 Control Technology

Control technology for secondary lead furnaces is similar to that for steel furnaces. First, the emissions must be captured, by furnace evacuation, hooding or building evacuation. Baghouses

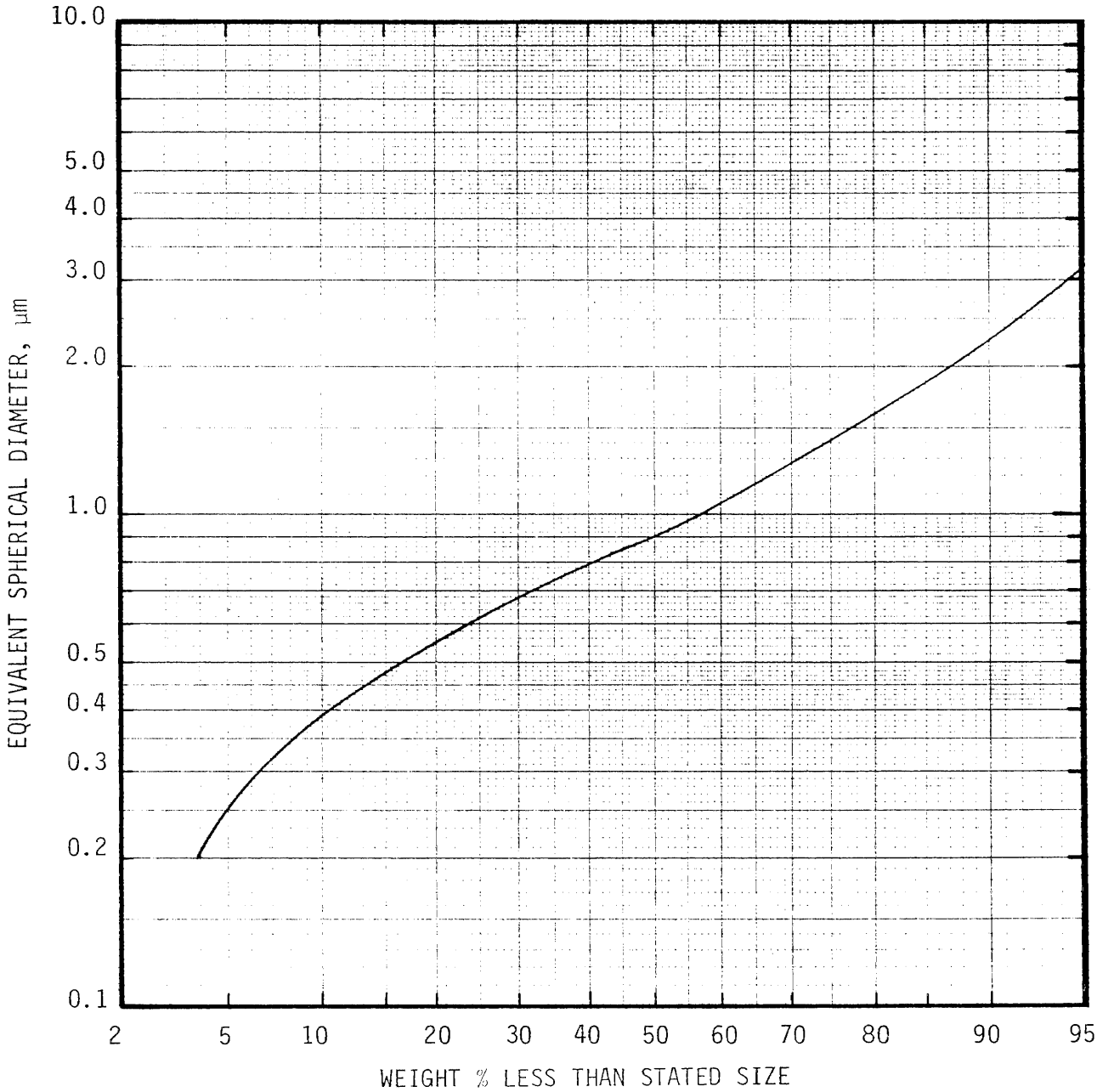

Figure 10.5.2-1. Particle size distribution brass melting, uncontrolled (Dawson, 1979).

TABLE 10.5.2-1. BRASS AND BRONZE SMELTER, CHEMICAL ANALYSIS OF MATERIAL COLLECTED IN A BAGHOUSE[a]

Element	Weight %
Zinc	45.0-77.0
Lead	1.0-12.0
Tin	0.3-2.0
Copper	0.05-1.0
Chlorine	0.5-1.5
Sulfur	0.1-1.7

[a]National Air Pollution Control Administration, 1969.

TABLE 10.5.2-2. BRASS FURNACE PARTICLE CHARACTERISTICS

Mass Concentration, mg/Nm³

Process	Uncontrolled Total	Uncontrolled <3 μmA	Controlled Total	Controlled <3 μmA	Particle Density g/cm³	Particle Resistivity ohm-cm
Rotary; Baghouse Control	70-2,300[a]		25-50[a]			
Reverbatory Baghouse Control	200-3,800[a]		60-70[a]			

[a]National Air Pollution Control Administration (1969)

TABLE 10.5.2-3. BRASS FURNACE GAS CHARACTERISTICS

Process	Production Rate	Gas Flowrate Nm^3/kg (unless otherwise noted)	Temperature °C	Chemical Composition, % vol, dry (unless otherwise noted)	
Brass Rotary Furnace		5.5-17.5 Nm^3/s[a]		CO_2	0.14-1.11[a]
				O_2	18-18.5
				N_2	balance
				SO_2	10 ppm
				H_2O	1.7-3.2
Reverbatory Furnace		2.7-8.3 Nm^3/s[a]	230-340[a]	CO_2	0.34-1.4[a]
				O_2	17.8-19.1
				N_2	balance
				CO	7.7-42.2 ppm
				H_2O	2.6-24
Crucible Furnace (Induction similar)		0.8 Nm^3/s[b]	200-230[b]	CO_2	0.4-2.4[b]
				O_2	16.8-19.8
				CO	0
				N_2	balance
				SO_2	Trace

[a]National Air Pollution Administration (1969)

[b]Vandegrift et al. (1971)

TABLE 10.6.2-1. LEAD FURNACE PARTICLE CHARACTERISTICS

	Mass Concentration, mg/Nm³					
	Uncontrolled		Controlled		Particle Density	Particle Resistivity
Process	Total	<3 μmA	Total	<3 μmA	g/cm³	ohm-cm
Lead Reverbatory Furnace; Baghouse controlled	11,300[a]	8,770*	30[a]-37[b]			

[a]Danielson (1973)

[b]Coleman et al.(1980)

*Based on Table 9.6.2-1.

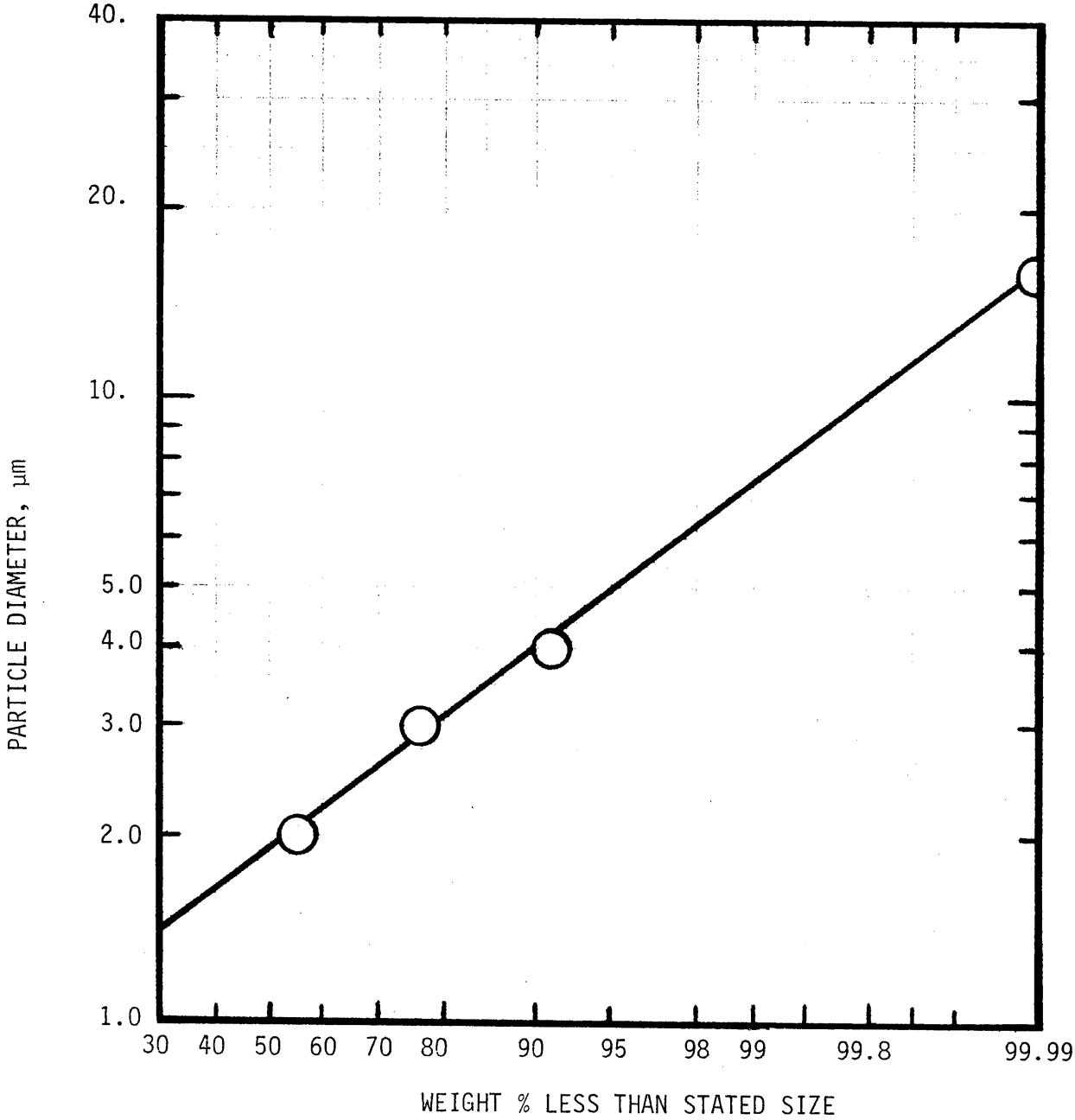

Figure 10.6.2-1. Particle size distribution for particles collected in baghouse of secondary lead furnace (Danielson, 1973).

TABLE 10.6.2-2. LEAD FURNACE GAS CHARACTERISTICS

Process	Production Rate	Gas Flowrate Nm^3/kg (unless otherwise noted)	Temperature °C	Chemical Composition, % vol, dry (unless otherwise noted)
Lead Reverbatory Furnace	0.3 kg/s[a]	1.5 Nm^3/s[a]	510[a]	
Crucible Furnace (similar to induction)		1-1.2 Nm^3/s[b]	160-180	

[a]Danielson (1973)

[b]Vandegrift et al.(1971)

are generally used to collect the particles, according to Danielson (1973). Minicucci et al. (1980) reported the use of Venturi scrubbers.

Control of charging and tapping rates are effective in reducing emissions. Using only clean scrap also reduces emissions, but this is not usually possible, according to Jutze et al. (1977).

10.7 SECONDARY ZINC

10.7.1 Process Description

The furnaces used most commonly in California for zinc remelting are the reverberatory sweat furnace and the retort furnace (California Air Resources Board, 1980). Both types are used to separate the zinc from other elements.

The reverberatory sweat furnace is similar to the reverberatory furnace described in 10.5.1. It is a small open hearth furnace with the hearth having a slight incline to the rear of the furnace. In a sweat furnace, the charge consists of scrap metal containing various impurities. The zinc is recovered by heating the charge to the point where the zinc will melt and separate from the solid charge. The molten metal is continuously tapped. Normally this is a batch operation and the residual scrap is periodically raked from the hearth, according to Danielson (1973).

In a retort furnace zinc oxides are converted to zinc (Danielson, 1973). Figure 10.7.1-1 shows a Belgian retort furnace. The ceramic retorts have an inside diameter of 20 cm (8 in.) and are 1.2-1.5 m (4 or 5 ft) long. Hundreds of these can be heated in one furnace. The charge consists of zinc oxide and powdered coke, which has been wetted with water. The zinc oxide is reduced to zinc vapor by carbon monoxide and is then condensed.

10.7.2 Source Characteristics

Particle size distribution data was not found for secondary zinc furnaces. Figure 10.7.2-1 shows size distribution for a primary zinc retort furnace. Table 10.7.2-1 gives chemical data for zinc sweating processes.

Particle and gas characteristics are given in Tables 10.7.2-2 and 10.7.2-3.

10.7.3 Control Technology

Hoods are used to capture emissions from charging and tapping of retort and zinc melting furances. Baghouses are used for control of the particle emissions (Jutze et al., 1977).

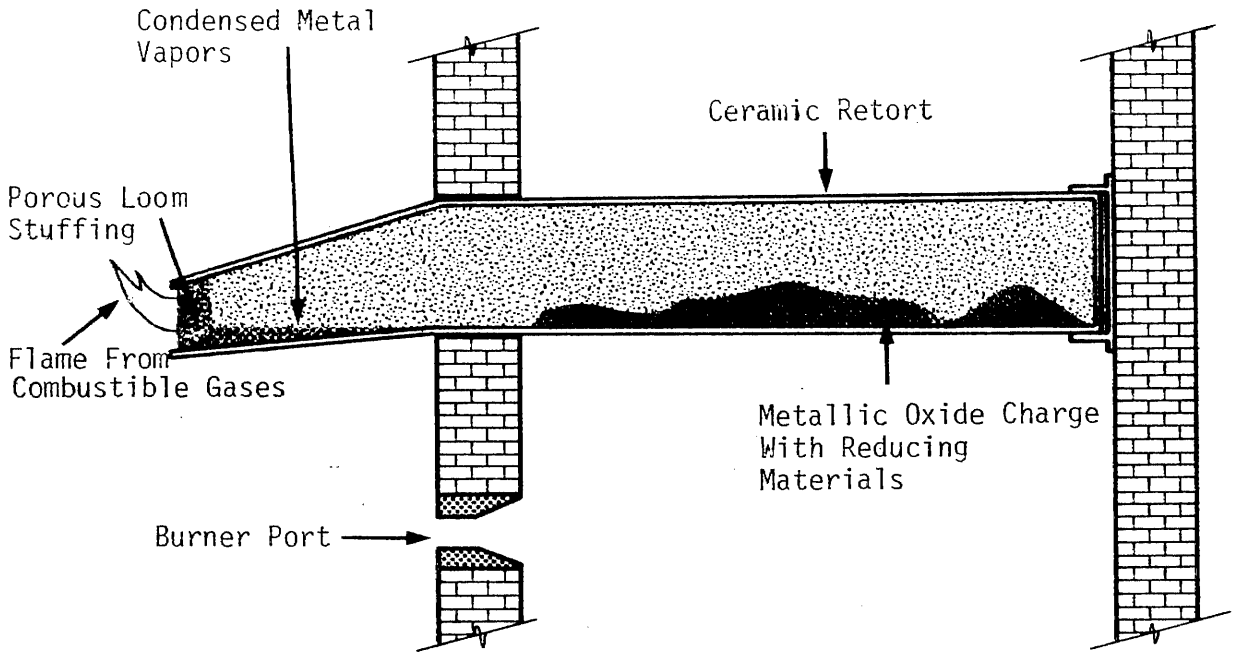

Figure 10.7.1-1. Belgian retort furnace (Danielson, 1973).

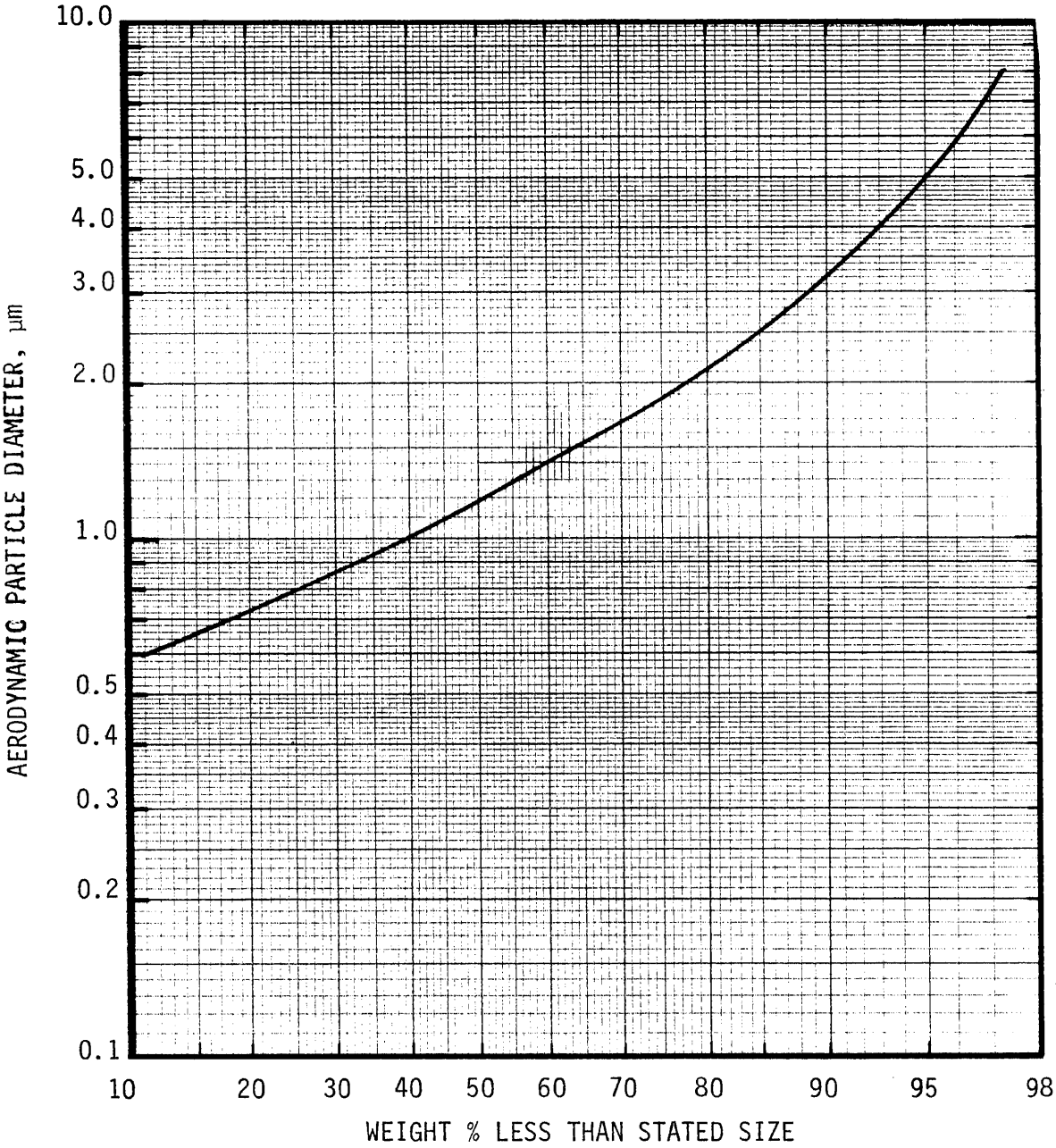

Figure 10.7.2-1. Particle size distribution zinc refining, uncontrolled vertical retort (Jacko, 1977).

TABLE 10.7.2-1. CHEMICAL ANALYSIS ZINC SWEAT FURNACE PARTICLE EMISSIONS[a]

Compound	Weight %
$ZnCl_2$	14.5-15.3
ZnO	46.7-50.0
NH_4Cl	1.1-1.4
Al_2O_3	1.0-2.7
Fe_2O_3	0.3-0.6
PbO	0.2
H_2O (in $ZnCl_2 \cdot H_2O$)	7.7-8.1
Oxides of Mg, Sn, Ni Si, Ca, Na	2.0
Carbonaceous Material	10.0
Moisture (Deliquescent)	5.2-10.2

[a]Jutze et al. (1977)

TABLE 10.7.2-2. ZINC FURNACE PARTICLE CHARACTERISTICS[a]

Mass Concentration, mg/Nm³

Process	Uncontrolled Total	Uncontrolled <3 μmA	Controlled Total	Controlled <3 μmA	Particle Density g/cm³	Particle Resistivity ohm-cm
Zinc Reverbatory Furnace	1,800-3,000					

[a]Vandegrift et al.(1970)

TABLE 10.7.2-3. ZINC FURNACE GAS CHARACTERISTICS[a]

Process	Production Rate	Gas Flowrate Nm^3/kg (unless otherwise noted)	Temperature °C	Chemical Composition, % vol, dry (unless otherwise noted)
Zinc Reverberatory Furnace		3.3-3.8 Nm^3/s	40-90	
Kettle Furnace			170	CO_2 2.4 H_2O 4.5 N_2 76.6 O_2 15.8

[a]Vandegrift et al. (1970)

10.8 CALCULATIONS

Control devices evaluated for metallurgical sources are listed in Table 10.8.1. The calculation results are summarized in Tables 10.8.2 through 10.8.12.

A duty factor of 0.8 was used in estimating the operating costs.

TABLE 10.8.1. LIST OF PERFORMANCE CALCULATIONS

Emission Source	Control Device								
	ESP	Pulse Charging ESP	Precharging ESP	Filter	Electrified Filter	Venturi Scrubber	Calvert Collision Scrubber	Charged Particle/Charged Drop Spray Scrubber	F/C Scrubber
Coke - over charging	X			X	X	X	X	X	
Coke - over pushing	X			X	X	X	X	X	
Iron & Steel - sinfering windbox machine	X			X	X	X	X	X	
Iron & Steel - blast furnace	X			X	X	X	X	X	
Iron & Steel - open hearth furnace				X	X	X	X	X	
Iron & Steel - basic oxygen furnace; clean scrap	X			X	X	X	X	X	
Iron & Steel - basic oxygen furnace; oily scrap	X			X	X	X	X	X	
Steel foundries - electric arc furnace	X			X	X	X	X	X	
Brass - melting	X			X	X	X	X	X	
Lead furnace	X			X	X	X	X	X	
Zinc - vertical refining retort	X			X	X	X	X	X	

TABLE 10.8-2

CONTROL TECHNOLOGY FOR STATIONARY SOURCES OF AIR POLLUTION

INDUSTRY: Metallurgy **SECTION:**

PROCESS	EMISSION SOURCE	PL	CONTROL TECHNOLOGY	CAPITAL, OPERATING, ANNUALIZED COSTS, $	EFFY (%)	REL (%)	S	ENERGY USE	ENVIR IMPACT	REMARKS	REF
Coke	Oven charging	PM	Scrubber CP/CD Spray Scrubber		99.9		5			E=98.9% for d_{pa}< 3μmA. 3-stage scrubber with L/G= 4 X $10^{-4}m^3/m^3$ per stage.	
Coke	Oven charging	PM	Filter Electro-statically Augmented Filter		99.99		4			E=99.97% for d_{pa}< 3μmA at full ESP power. ESP SCA = 8.9 $m^2/m^3/s$. Air/cloth = 1.76 m/min.	
Coke	Oven charging	PM	Filter	17,092/m^3/s 6,377/m^3/s 8,385/m^3/s	99.0		1	7.1kW/m^3/s		E=99.4% for d_{pa}< 3μmA. Air/cloth = 0.93 m/min.	
Coke	Oven charging	PM	Filter	13,068/m^3/s 6,284/m^3/s 7,819/m^3/s	98.5		1	7.7kW/m^3/s		E=96.8% for d_{pa}< 3μmA. Air/cloth = 3.1 m/min.	

TABLE 10.8-2

CONTROL TECHNOLOGY FOR STATIONARY SOURCES OF AIR POLLUTION

INDUSTRY: Metallurgy

SECTION:

PROCESS	EMISSION SOURCE	PL	CONTROL TECHNOLOGY	CAPITAL, OPERATING, ANNUALIZED COSTS, $	EFFY (%)	REL (%)	ENERGY USE	ENVIR IMPACT	REMARKS	REF
Coke	Oven charging	PM	Filter	15,702/m^3/s 7,606/m^3/s 9,451/m^3/s	97.1		1	10.6kW/m^3/s	E=91.7% for d_{pa}< 3μmA. Air/cloth = 5.5 m/min.	
Coke	Oven charging	PM	Scrubber Calvert Collision Scrubber	10,018/m^3/s 8,252/m^3/s 9,722/m^3/s	98.9		2	6.2kW/m^3/s	E=90% for d_{pa}< 3μmA at a scrubber pressure drop of 33 cm W.C.	
Coke	Oven charging	PM	Scrubber Venturi	12,640/m^3/s 8,471/m^3/s 10,528/m^3/s	98.9		1	6.4kW/m^3/s	E=90% for d_{pa}< 3μmA at a scrubber pressure drop of 34 cm W.C.	
Coke	Oven charging	PM	ESP	6,747/m^3/s 3,181/m^3/s 3,974/m^3/s	94.4		1	2.5kW/m^3/s	E=75% for d_{pa}< 3μmA. Corona power = 362 w/m^3/s. SCA = 25m^2/m^3/s.	

TABLE 10.8-2

CONTROL TECHNOLOGY FOR STATIONARY SOURCES OF AIR POLLUTION

INDUSTRY: Metallurgy **SECTION:**

PROCESS	EMISSION SOURCE	PL	CONTROL TECHNOLOGY	CAPITAL, OPERATING, ANNUALIZED COSTS, $	EFFY (%)	REL (%)	S	ENERGY USE	ENVIR IMPACT	REMARKS	REF
Coke	Oven charging	PM	ESP	6,747/m^3/s 6,067/m^3/s 6,859/m^3/s	98.6		1	9.0kW/m^3/s		E=90% for d_{pa}< 3μmA. Corona power = 3,917 W/m^3/s SCA = 25m^2/m^3/s.	

TABLE 10.8-3

CONTROL TECHNOLOGY FOR STATIONARY SOURCES OF AIR POLLUTION

INDUSTRY: Metallurgy

SECTION:

PROCESS	EMISSION SOURCE	PL	CONTROL TECHNOLOGY	CAPITAL, OPERATING, ANNUALIZED COSTS, $	EFFY (%)	REL (%)	ENERGY USE	ENVIR IMPACT	REMARKS	REF
Coke	Oven pushing	PM	Scrubber CP/CD Spray Scrubber		99.90		5		E=98.4% for d_{pa}< 3μmA. 3-stage scrubber with L/G= 4 x $10^{-4} m^3/m^3$ per stage.	
Coke	Oven pushing	PM	Filter Electro-statically augmented filter		99.92		4		E=99.94% for d_{pa}< 3μmA at full ESP power. ESP SCA = $8.9 m^2/m^3/s$. Air/cloth = 1.76 m/min.	
Coke	Oven pushing	PM	Filter	20,811/m^3/s 8,748/m^3/s 11,192/m^3/s	99.9		1	8.4 kW/m^3/s	E=99.5% for d_{pa}< 3μmA. Air/cloth = 0.93 m/min.	
Coke	Oven pushing	PM	Filter	14,247/m^3/s 8,082/m^3/s 9,756/m^3/s	99.2		1	8.1 kW/m^3/s	E=96.1% for d_{pa}< 3μmA. Air/cloth = 3.1 m/min.	

TABLE 10.8-3

CONTROL TECHNOLOGY FOR STATIONARY SOURCES OF AIR POLLUTION

INDUSTRY: Metallurgy **SECTION:**

PROCESS	EMISSION SOURCE	PL	CONTROL TECHNOLOGY	CAPITAL, OPERATING, ANNUALIZED COSTS,$	EFFY (%)	REL (%)	S	ENERGY USE	ENVIR IMPACT	REMARKS	REF
Coke	Oven pushing	PM	Filter	16,610/m³/s 9,300/m³/s 11,251/m³/s	98.6		1	10.8 kW/m³/s		E=89.1% for d_{pa}< 3μmA. Air/cloth = 5.5 m/min.	
Coke	Oven pushing	PM	Scrubber Calvert Collision Scrubber	8,653/m³/s 9,832/m³/s 11,240/m³/s	99.6		2	6 kW/m³/s		E=90% for d_{pa}< 3μmA at a scrubber pressure drop of 31 cm W.C.	
Coke	Oven pushing	PM	Scrubber Venturi	17,785/m³/s 12,343/m³/s 15,237/m³/s	99.3		1	11.8kW/m³/s		E=90% for d_{pa}< 3μmA at a scrubber pressure drop of 66 cm W.C.	
Coke	Oven pushing	PM	Scrubber Venturi	11,198/m³/s 9,542/m³/s 11,364/m³/s	98.4		1	6 kW/m³/s		E=75% for d_{pa}< 3μmA at a scrubber pressure drop of 32 cm W.C.	

TABLE 10.8-3

CONTROL TECHNOLOGY FOR STATIONARY SOURCES OF AIR POLLUTION

INDUSTRY: Metallurgy

SECTION:

PROCESS	EMISSION SOURCE	PL	CONTROL TECHNOLOGY	CAPITAL, OPERATING, ANNUALIZED COSTS, $	EFFY (%)	REL (%)	S	ENERGY USE	ENVIR IMPACT	REMARKS	REF
Coke	Oven pushing	PM	ESP	8,067/m^3/s 4,213/m^3/s 5,160/m^3/s	83.0		1	1.9 kW/m^3/s		E=50% for d_{pa}< 3μmA. Corona power = 15 W/m^3/s SCA = 25m^2/m^3/s.	
Coke	Oven pushing	PM	ESP	8,067/m^3/s 4,702/m^3/s 5,649/m^3/s	95.0		1	2.2kW/m^3/s		E=75% for d_{pa}< 3μmA. Corona power = 133 W/m^3/s SCA = 25m^2/m^3/s.	
Coke	Oven pushing	PM	ESP	8,067/m^3/s 5,367/m^3/s 6,315/m^3/s	98.7		1	3.5kW/m^3/s		E=90% for d_{pa}< 3μmA. Corona power = 650 W/m^3/s SCA = 25m^2/m^3/s.	

TABLE 10.8-4

CONTROL TECHNOLOGY FOR STATIONARY SOURCES OF AIR POLLUTION

INDUSTRY: Primary Metal Industries **SECTION:**

PROCESS	EMISSION SOURCE	PL	CONTROL TECHNOLOGY	CAPITAL, OPERATING, ANNUALIZED COSTS, $	EFFY (%)	REL (%)	S	ENERGY USE	ENVIR IMPACT	REMARKS	REF
Iron & Steel	Sintering windbox machine	PM	Scrubber CP/CD Spray		99.9		5			E=99.5% for d_{pa}< 3μmA. 3-stage scrubber with L/G=$4x10^{-4}m^3/m^3$ per stage.	
Iron & Steel	Sintering windbox machine	PM	Filter Electrostatically augmented filter		99.98		4			E=99.97% for d_{pa}< 3μmA at full ESP power. ESP SCA = $8.9m^2/m^3/s$. Air/cloth = 1.76 m/min.	
Iron & Steel	Sintering windbox machine	PM	Filter	19,362/m^3/s 5,669/m^3/s 7,943/m^3/s	99.5		1	7.9kW/m^3/s		E=99.3% for d_{pa}< 3μmA. Air/cloth = 0.93 m/min.	
Iron & Steel	Sintering windbox machine	PM	Filter	13,812/m^3/s 5,209/m^3/s 6,831/m^3/s	98.3		1	7.9kW/m^3/s		E=96.0% for d_{pa}< 3μmA. Air/cloth = 3.1 m/min.	

TABLE 10.8-4

CONTROL TECHNOLOGY FOR STATIONARY SOURCES OF AIR POLLUTION

INDUSTRY: Primary Metal Industries

SECTION:

PROCESS	EMISSION SOURCE	PL	CONTROL TECHNOLOGY	CAPITAL, OPERATING, ANNUALIZED COSTS, $	EFFY (%)	REL (%)	ENERGY USE	ENVIR IMPACT	REMARKS	REF
Iron & Steel	Sintering windbox machine	PM	Filter	16,365/m^3/s 6,483/m^3/s 8,405/m^3/s	97.1		1	10.7kW/m^3/s	E=91.9% for d_{pa}< 3μmA. Air/cloth = 5.5 m/min.	
Iron & Steel	Sintering windbox machine	PM	Scrubber Calvert Collision Scrubber	10,431/m^3/s 12,747/m^3/s 14,280/m^3/s	98.0		2	5 kW/m^3/s	E=90% for d_{pa}< 3μmA at a scrubber pressure drop of 26 cm W.C.	
Iron & Steel	Sintering windbox machine	PM	Scrubber Venturi	13,256/m^3/s 12,123/m^3/s 14,280/m^3/s	99.4		1	3.3kW/m^3/s	E=90% for d_{pa}< 3μmA at a scrubber pressure drop of 16 cm W.C.	
Iron & Steel	Sintering windbox machine	PM	ESP	14,308/m^3/s 4,557/m^3/s 6,238/m^3/s	93.0		1	2.1kW/m^3/s	E=50% for d_{pa}< 3μmA. Corona power = 39 W/m^3/s SCA = 50m^2/m^3/s.	

TABLE 10.8-4

CONTROL TECHNOLOGY FOR STATIONARY SOURCES OF AIR POLLUTION

INDUSTRY: Primary Metal Industries **SECTION:**

PROCESS	EMISSION SOURCE	PL	CONTROL TECHNOLOGY	CAPITAL, OPERATING, ANNUALIZED COSTS, $	EFFY (%)	REL (%)	S	ENERGY USE	ENVIR IMPACT	REMARKS	REF
Iron & Steel	Sintering windbox machine	PM	ESP	19,164/m^3/s 4,885/m^3/s 7,136/m^3/s	97.8		1	2.4kW/m^3/s		E=75% for d_{pa}< 3μmA. Corona power = 95 W/m^3/s SCA = 75m^2/m^3/s.	

TABLE 10.8-5

CONTROL TECHNOLOGY FOR STATIONARY SOURCES OF AIR POLLUTION

INDUSTRY: Primary Metal Industries

SECTION:

PROCESS	EMISSION SOURCE	PL	CONTROL TECHNOLOGY	CAPITAL, OPERATING, ANNUALIZED COSTS, $	EFFY (%)	REL (%)	ENERGY USE	ENVIR IMPACT	REMARKS	REF
Iron & Steel	Blast furnace	PM	Scrubber CP/CD Spray Scrubber		99.4		5		E=99.0% for d_{pa}< 3μmA. 3-stage scrubber with L/G= $4x10^{-4}m^3/m^3$ per stage.	
Iron & Steel	Blast furnace	PM	Filter Electro-statically Augmented Filter		99.91		4		E=99.90% for d_{pa}< 3μmA at full ESP power. ESP SCA = $8.9m^2/m^3/s$. Air/cloth = 1.76 m/min.	
Iron & Steel	Blast furnace	PM	Filter	18,485/m^3/s 6,093/m^3/s 8,264/m^3/s	99.4		1	7.3kW/m^3/s	E=99.6% for d_{pa}< 3μmA. Air/cloth = 0.93 m/min.	
Iron & Steel	Blast furnace	PM	Filter	13,953/m^3/s 5,891/m^3/s 7,530/m^3/s	96.0		1	7.8kW/m^3/s	E=93.7% for d_{pa}< 3μmA. Air/cloth = 3.1 m/min.	

TABLE 10.8-5

CONTROL TECHNOLOGY FOR STATIONARY SOURCES OF AIR POLLUTION

INDUSTRY: Primary Metal Industries **SECTION:**

PROCESS	EMISSION SOURCE	PL	CONTROL TECHNOLOGY	CAPITAL, OPERATING, ANNUALIZED COSTS, $	EFFY (%)	REL (%)	S	ENERGY USE	ENVIR IMPACT	REMARKS	REF
Iron & Steel	Blast furnace	PM	Filter	16,493/m^3/s 7,197/m^3/s 9,135/m^3/s	90.3		1	10.6kW/m^3/s		E=84.5% for d_{pa}< 3μmA. Air/cloth = 5.5 m/min.	
Iron & Steel	Blast furnace	PM	Scrubber Calvert Collision Scrubber	8,169/m^3/s 7,563/m^3/s 8,893/m^3/s	99.5		2	5.0kW/m^3/s		E=90% for d_{pa}< 3μmA at a scrubber pressure drop of 25 cm W.C.	
Iron & Steel	Blast furnace	PM	Scrubber Venturi	12,500/m^3/s 7,947/m^3/s 9,994/m^3/s	95.2		1	5.5kW/m^3/s		E=90% for d_{pa}< 3μmA at a scrubber pressure drop of 29 cm W.C.	
Iron & Steel	Blast furnace	PM	ESP	7,226/m^3/s 2,277/m^3/s 3,126/m^3/s	66.5		1	1.9kW/m^3/s		E=50% for d_{pa}< 3μmA. Corona power = 25 W/m^3/s SCA = 25m^2/m^3/s.	

TABLE 10.8-5

CONTROL TECHNOLOGY FOR STATIONARY SOURCES OF AIR POLLUTION

INDUSTRY: PRIMARY METAL INDUSTRIES

SECTION:

PROCESS	EMISSION SOURCE	PL	CONTROL TECHNOLOGY	CAPITAL, OPERATING, ANNUALIZED COSTS, $	EFFY (%)	REL (%)	S	ENERGY USE	ENVIR IMPACT	REMARKS	REF
Iron & Steel	Blast furnace	PM	ESP	7,226/m^3/s 2,450/m^3/s 3,299/m^3/s	85.0		1	2.2kW/m^3/s		E=75% for d_{pa}< 3μmA. Corona power = 188 W/m^3/s SCA = 25 m^2/m^3/s.	
Iron & Steel	Blast furnace	PM	ESP	11,464/m^3/s 2,758/m^3/s 4,104/m^3/s	95.5		1	2.5kW/m^3/s		E=90% for d_{pa}< 3μmA. Corona power = 257 W/m^3/s SCA = 50 m^2/m^3/s	

TABLE 10.8-6

CONTROL TECHNOLOGY FOR STATIONARY SOURCES OF AIR POLLUTION

INDUSTRY: Primary Metal Industries

SECTION:

PROCESS	EMISSION SOURCE	PL	CONTROL TECHNOLOGY	CAPITAL, OPERATING, ANNUALIZED COSTS, $	EFFY (%)	REL (%)	ENERGY USE	ENVIR IMPACT	REMARKS	REF
Iron & Steel	Open hearth furnace	PM	Scrubber CP/CD Spray Scrubber		99.8		5		E=99.7% for d_{pa}< 3μmA. 3-stage scrubber with L/G= $4x10^{-4}m^3/m^3$ per stage.	
Iron & Steel	Open hearth furnace	PM	Filter Electro-statically Augmented Filter		94.8		4		E=94.2% for d_{pa}< 3μmA at full ESP power. ESP SCA = $8.9m^2/m^3/s$. Air/cloth = 1.76 m/min.	
Iron & Steel	Open hearth furnace	PM	Filter	28,367/m^3/s 8,351/m^3/s 11,683/m^3/s	99.8		1	9.6kW/m^3/s	E=99.8% for d_{pa}< 3μmA. Air/cloth = 0.93 m/min.	
Iron & Steel	Open hearth furnace	PM	Filter	17,220/m^3/s 6,484/m^3/s 8,507/m^3/s	52.2		1	8.4kW/m^3/s	E=42.2% for d_{pa}< 3μmA. Air/cloth = 3.1 m/min.	

TABLE 10.8-6

CONTROL TECHNOLOGY FOR STATIONARY SOURCES OF AIR POLLUTION

INDUSTRY: Primary Metal Industries **SECTION:**

PROCESS	EMISSION SOURCE	PL	CONTROL TECHNOLOGY	CAPITAL, OPERATING, ANNUALIZED COSTS, $	EFFY (%)	REL (%)	S	ENERGY USE	ENVIR IMPACT	REMARKS	REF
Iron & Steel	Open hearth furnace	PM	Scrubber Calvert Collision Scrubber	17,504/m³/s 11,536/m³/s 14,385/m³/s	55.2		2	13.5kW/m³/s		E=50% for d_{pa}< 3μmA for a scrubber pressure drop of 76 cm W.C.	
Iron & Steel	Open hearth furnace	PM	Scrubber Venturi	23,298/m³/s 12,936/m³/s 16,728/m³/s	79.0		1	15.5kW/m³/s		E=75% for d_{pa}< 3μmA at a scrubber pressure drop of 88 cm W.C.	
Iron & Steel	Open hearth furnace	PM	Scrubber Venturi	15,383/m³/s 9,320/m³/s 11,824/m³/s	57.0		1	8.6kW/m³/s		E=50% for d_{pa}< 3μmA at a scrubber pressure drop of 47 cm W.C.	

TABLE 10.8-7

CONTROL TECHNOLOGY FOR STATIONARY SOURCES OF AIR POLLUTION

INDUSTRY: Primary Metal Industries **SECTION:**

PROCESS	EMISSION SOURCE	PL	CONTROL TECHNOLOGY	CAPITAL, OPERATING, ANNUALIZED COSTS, $	EFFY (%)	REL (%)	ENERGY USE	ENVIR IMPACT	REMARKS	REF
Iron & Steel	Basic oxygen furnace-clean scrap	PM	Scrubber CP/CD Spray Scrubber		99.6	5			E=99.2% for d_{pa}< 3μmA. 3-stage scrubber with L/G= $4x10^{-4}m^3/m^3$ per stage.	
Iron & Steel	Basic oxygen furnace-clean scrap	PM	Filter Electro-statically Augmented Filter		99.7	4			E=99.5% for d_{pa}< 3μmA at full ESP power. ESP SCA = 8.9 $m^2/m^3/s$. Air/cloth = 1.76 m/min.	
Iron & Steel	Basic oxygen furnace-clean scrap	PM	Filter	22,692/m^3/s 10,153/m^3/s 12,818/m^3/s	99.6	1	8.9kW/m^3/s		E=99.7% for d_{pa}< 3μmA. Air/cloth = 0.93 m/min.	
Iron & Steel	Basic oxygen furnace-clean scrap	PM	Filter	15,114/m^3/s 9,095/m^3/s 10,870/m^3/s	95.2	1	8.2kW/m^3/s		E=78.5% for d_{pa}< 3μmA. Air/cloth = 3.1 m/min.	

TABLE 10.8-7

CONTROL TECHNOLOGY FOR STATIONARY SOURCES OF AIR POLLUTION

INDUSTRY: Primary Metal Industries

SECTION:

PROCESS	EMISSION SOURCE	PL	CONTROL TECHNOLOGY	CAPITAL, OPERATING, ANNUALIZED COSTS, $	EFFY (%)	REL (%)	S	ENERGY USE	ENVIR IMPACT	REMARKS	REF
Iron & Steel	Basic oxygen furnace-clean scrap	PM	Filter	17,288/m³/s 10,067/m³/s 12,098/m³/s	89.3		1	10.9kW/m³/s		E=52.5% for d_{pa}< 3μmA. Air/cloth = 5.5 m/min.	
Iron & Steel	Basic oxygen furnace-clean scrap	PM	Scrubber Calvert Collision Scrubber	9,977/m³/s 11,125/m³/s 12,748/m³/s	96.4		2	7.1kW/m³/s		E=90% for d_{pa}< 3μmA at a scrubber pressure drop of 37 cm W.C.	
Iron & Steel	Basic oxygen furnace-clean scrap	PM	Scrubber Venturi	17,564/m³/s 13,043/m³/s 15,902/m³/s	96.5		1	10.8kW/m³/s		E=90% for d_{pa}< 3μmA at a scrubber pressure drop of 60 cm W.C.	
Iron & Steel	Basic oxygen furnace-clean scrap	PM	Scrubber Venturi	10,976/m³/s 10,080/m³/s 11,867/m³/s	91.5		1	5.0kW/m³/s		E=75% for d_{pa}< 3μmA at a scrubber pressure drop of 26 cm W.C.	

TABLE 10.8-7

CONTROL TECHNOLOGY FOR STATIONARY SOURCES OF AIR POLLUTION

INDUSTRY: Primary Metal Industries **SECTION:**

PROCESS	EMISSION SOURCE	PL	CONTROL TECHNOLOGY	CAPITAL, OPERATING, ANNUALIZED COSTS, $	EFFY (%)	REL (%)	S	ENERGY USE	ENVIR IMPACT	REMARKS	REF
Iron & Steel	Basic oxygen furnace-clean scrap	PM	ESP	8,711/m^3/s 5,248/m^3/s 6,271/m^3/s	85.0		1	2.2kW/m^3/s		E=75% for d_{pa}< 3μmA. Corona power = 112 W/m^3/s SCA = 25 m^2/m^3/s.	
Iron & Steel	Basic oxygen furnace-clean scrap	PM	ESP	8,711/m^3/s 5,995/m^3/s 7,018/m^3/s	95.0		1	3.1kW/m^3/s		E=90% for d_{pa}< 3μmA. Corona power = 427 W/m^3/s. SCA = 25m^2/m^3/s.	

TABLE 10.8-8

CONTROL TECHNOLOGY FOR STATIONARY SOURCES OF AIR POLLUTION

INDUSTRY: Primary Metal Industries

SECTION:

PROCESS	EMISSION SOURCE	PL	CONTROL TECHNOLOGY	CAPITAL, OPERATING, ANNUALIZED COSTS, $	EFFY (%)	REL (%)	ENERGY USE	ENVIR IMPACT	REMARKS	REF
Iron & Steel	Basic Oxygen furnace-oily scrap	PM	Scrubber CP/CD Spray Scrubber		99.5	5			E=99.3% for d_{pa}< 3μmA. 3-stage scrubber with L/G= $4x10^{-4}m^3/m^3$ per stage.	
Iron & Steel	Basic oxygen furnace-oily scrap	PM	Filter Electro-statically Augmented Filter		98.7	4			E=98.0% for d_{pa}< 3μmA at full ESP power. ESP SCA = 8.9 $m^2/m^3/s$. Air/cloth = 1.76 m/min.	
Iron & Steel	Basic oxygen furnace-oily scrap	PM	Filter	22,692/m^3/s 16,410/m^3/s 19,075/m^3/s	98.2	1	8.9kW/m^3/s		E=97.3% for d_{pa}< 3μmA. Air/cloth = 0.93 m/min.	
Iron & Steel	Basic oxygen furnace-oily scrap	PM	Filter	15,114/m^3/s 14,427/m^3/s 16,202/m^3/s	87.5	1	8.2kW/m^3/s		E=81.5% for d_{pa}< 3μmA. Air/cloth = 3.1 m/min.	

TABLE 10.8-8

CONTROL TECHNOLOGY FOR STATIONARY SOURCES OF AIR POLLUTION

INDUSTRY: Primary Metal Industries

SECTION:

PROCESS	EMISSION SOURCE	PL	CONTROL TECHNOLOGY	CAPITAL, OPERATING, ANNUALIZED COSTS, $	EFFY (%)	REL (%)	S	ENERGY USE	ENVIR IMPACT	REMARKS	REF
Iron & Steel	Basic oxygen furnace-oily scrap	PM	Filter	17,288/m^3/s 14,918/m^3/s 16,948/m^3/s	80.6		1	10.9/kW/m^3/s		E=71.3% for d_{pa}< 3μmA. Air/cloth = 5.5 m/min.	
Iron & Steel	Basic oxygen furnace-oily scrap	PM	Scrubber Calvert Collision Scrubber	13,054/m^3/s 18,564/m^3/s 20,689/m^3/s	95.9		2	9.8kW/m^3/s		E=90% for d_{pa}< 3μmA at a scrubber pressure drop of 54 cm W.C.	
Iron & Steel	Basic oxygen furnace-oily scrap	PM	Scrubber Venturi	17,171/m^3/s 18,416/m^3/s 21,210/m^3/s	90.0		1	10.4kW/m^3/s		E=75% for d_{pa}< 3μmA at a scrubber pressure drop of 58 cm W.C.	
Iron & Steel	Basic oxygen furnace-oily scrap	PM	ESP	8,711/m^3/s 11,069/m^3/s 12,092/m^3/s	87.0		1	2.6kW/m^3/s		E=75% for d_{pa}< 3μmA. Corona power = 244 W/m^3/s. SCA = 25 m^2/m^3/s.	

TABLE 10.8-8

CONTROL TECHNOLOGY FOR STATIONARY SOURCES OF AIR POLLUTION

INDUSTRY: Primary Metal Industries

SECTION:

PROCESS	EMISSION SOURCE	PL	CONTROL TECHNOLOGY	CAPITAL, OPERATING, ANNUALIZED COSTS, $	EFFY (%)	REL (%)	S	ENERGY USE	ENVIR IMPACT	REMARKS	REF
Iron & Steel	Basic oxygen furnace-oily scrap	PM	ESP	8,711/m^3/s 13,091/m^3/s 14,114/m^3/s	95.0		1	5.3 W/m^3/s		E=90% for d_{pa}< 3μmA. Corona power = 1,276 W/m^3/s. SCA = 25 m^2/m^3/s.	

TABLE 10.8-9

CONTROL TECHNOLOGY FOR STATIONARY SOURCES OF AIR POLLUTION

INDUSTRY: Primary Metal Industries

SECTION:

PROCESS	EMISSION SOURCE	PL	CONTROL TECHNOLOGY	CAPITAL, OPERATING, ANNUALIZED COSTS, $	EFFY (%)	REL (%)	ENERGY USE	ENVIR IMPACT	REMARKS	REF
Steel Foundries	Electric arc furnace	PM	Scrubber CP/CD Spray Scrubber		99.7	5			E=99.3% for d_{pa}< 3μmA. 3-stage scrubber with L/G=4x10^{-4}m^3/m^3 per stage.	
Steel Foundries	Electric arc furnace	PM	Filter Electro-statically Augmented Filter		99.96	4			E=99.94% for d_{pa}< 3μmA at full ESP power. ESP SCA = 8.9m^2/m^3/s. Air/cloth = 1.76 m/min.	
Steel Foundries	Electric arc furnace	PM	Filter	26,593/m^3/s 9,730/m^3/s 12,853/m^3/s	99.7	1	9.6kW/m^3/s		E=99.5% for d_{pa}< 3μmA. Air/cloth = 0.93 m/min.	
Steel Foundries	Electric arc furnace	PM	Filter	15,446/m^3/s 8,377/m^3/s 10,191/m^3/s	97.1	1	8.4kW/m^3/s		E=95.2% for d_{pa}< 3μmA. Air/cloth = 3.1 m/min.	

TABLE 10.8-9

CONTROL TECHNOLOGY FOR STATIONARY SOURCES OF AIR POLLUTION

INDUSTRY: Primary Metal Industries

SECTION:

PROCESS	EMISSION SOURCE	PL	CONTROL TECHNOLOGY	CAPITAL, OPERATING, ANNUALIZED COSTS, $	EFFY (%)	REL (%)	S	ENERGY USE	ENVIR IMPACT	REMARKS	REF
Steel Foundries	Electric arc furnace	PM	Filter	16,952/m^3/s 9,398/m^3/s 11,389/m^3/s	94.3		1	11.0kW/m^3/s		E=89.1% for d_{pa}< 3μmA. Air/cloth = 5.5 m/min.	
Steel Foundries	Electric arc furnace	PM	Scrubber Calvert Collision Scrubber	9,292/m^3/s 10,718/m^3/s 12,230/m^3/s	96.0		2	6.5kW/m^3/s		E=90% for d_{pa}< 3μmA at a scrubber pressure drop of 35 cm W.C.	
Steel Foundries	Electric arc furnace	PM	Scrubber Venturi	19,565/m^3/s 15,138/m^3/s 18,323/m^3/s	96.4		1	18.9kW/m^3/s		E=90% for d_{pa}< 3μmA at a scrubber pressure drop of 108 cm W.C.	
Steel Foundries	Electric arc furnace	PM	Scrubber Venturi	3,686/m^3/s 8,229/m^3/s 8,829/m^3/s	90.5		1	5.0kW/m^3/s		E=75% for d_{pa}< 3μmA at a scrubber pressure drop of 26 cm W.C.	

TABLE 10.8-9

CONTROL TECHNOLOGY FOR STATIONARY SOURCES OF AIR POLLUTION

INDUSTRY: Primary Metal Industries **SECTION:**

PROCESS	EMISSION SOURCE	PL	CONTROL TECHNOLOGY	CAPITAL, OPERATING, ANNUALIZED COSTS, $	EFFY (%)	REL (%)	S	ENERGY USE	ENVIR IMPACT	REMARKS	REF
Steel Foundries	Electric arc furnace	PM	ESP	13,911/m^3/s 3,782/m^3/s 5,416/m^3/s	56.0		1	2.1kW/m^3/s		E=50% for d_{pa}< 3μmA. Corona power = 25 W/m^3/s. SCA = 25 m^2/m^3/s.	
Steel Foundries	Electric arc furnace	PM	ESP	13,911/m^3/s 4,962/m^3/s 6,596/m^3/s	79.0		1	2.9kW/m^3/s		E=75% for d_{pa}< 3μmA. Corona power = 188 W/m^3/s. SCA = 25 m^2/m^3/s.	
Steel Foundries	Electric arc furnace	PM	ESP	25,371/m^3/s 6,119/m^3/s 9,099/m^3/s	92.0		1	3.3kW/m^3/s		E=90% for d_{pa}< 3μmA. Corona power = 225 W/m^3/s. SCA = 50m^2/m^3/s.	

TABLE 10.8-10

CONTROL TECHNOLOGY FOR STATIONARY SOURCES OF AIR POLLUTION

INDUSTRY: Primary Metal Industries **SECTION:**

PROCESS	EMISSION SOURCE	PL	CONTROL TECHNOLOGY	CAPITAL, OPERATING, ANNUALIZED COSTS, $	EFFY (%)	REL (%)	ENERGY S	ENERGY USE	ENVIR IMPACT	REMARKS	REF
Brass	Brass melting	PM	Scrubber CP/CD Spray Scrubber		99.0		5			E=98.9% for d_{pa}< 3μmA. 3-stage scrubber with L/G=4x10^{-4}m^3/m^3 per stage.	
Brass	Brass melting	PM	Filter Electro-statically Augmented Filter		99.7		4			E=99.7% for d_{pa}< 3μmA at full ESP power. ESP SCA = 8.9 m^2/m^3/s. Air/cloth=1.76 m/min.	
Brass	Brass melting	PM	Filter	37,934/m^3/s 13,606/m^3/s 18,062/m^3/s	99.5		1	9.6kW/m^3/s		E=99.5% for d_{pa}< 3μmA. Air/cloth = 0.93 m/min.	
Brass	Brass melting	PM	Filter	26,787/m^3/s 12,308/m^3/s 15,454/m^3/s	91.9		1	8.4kW/m^3/s		E=91.6% for d_{pa}< 3μmA. Air/cloth = 3.1 m/min.	

TABLE 10.8-10

CONTROL TECHNOLOGY FOR STATIONARY SOURCES OF AIR POLLUTION

INDUSTRY: Primary Metal Industries **SECTION:**

PROCESS	EMISSION SOURCE	PL	CONTROL TECHNOLOGY	CAPITAL, OPERATING, ANNUALIZED COSTS, $	EFFY (%)	REL (%)	ENERGY S	ENERGY USE	ENVIR IMPACT	REMARKS	REF
Brass	Brass melting	PM	Filter	28,293/m^3/s 13,382/m^3/s 16,705/m^3/s	82.5		1	11.0kW/m^3/s		E=81.7% for d_{pa}< 3μmA. Air/cloth = 5.5 m/min.	
Brass	Brass melting	PM	Scrubber Calvert Collision Scrubber	11,721/m^3/s 16,900/m^3/s 18,807/m^3/s	93.0		2	5.0kW/m^3/s		E=90% for d_{pa}< 3μmA at a scrubber pressure drop of 26 cm W.C.	
Brass	Brass melting	PM	Scrubber Venturi	17,609/m^3/s 17,356/m^3/s 20,222/m^3/s	93.8		1	5.5kW/m^3/s		E=90% for d_{pa}< 3μmA at a scrubber pressure drop of 29 cm W.C.	
Brass	Brass melting	PM	ESP	12,415/m^3/s 6,188/m^3/s 7,646/m^3/s	80.0		1	2.3kW/m^3/s		E=75% for d_{pa}< 3μmA. Corona power = 132 W/m^3/s. SCA = 25m^2/m^3/s.	

TABLE 10.8-10

CONTROL TECHNOLOGY FOR STATIONARY SOURCES OF AIR POLLUTION

INDUSTRY: Primary Metal Industries

SECTION:

PROCESS	EMISSION SOURCE	PL	CONTROL TECHNOLOGY	CAPITAL, OPERATING, ANNUALIZED COSTS, $	EFFY (%)	REL (%)	S	ENERGY USE	ENVIR IMPACT	REMARKS	REF
Brass	Brass melting	PM	ESP	12,415/m^3/s 6,738/m^3/s 8,196/m^3/s	93.0		1	3.4kW/m^3/s		E=90% for dpa< 3μmA. Corona power = 487 W/m^3/s. SCA = 25m^2/m^3/s.	

TABLE 10.8-11

CONTROL TECHNOLOGY FOR STATIONARY SOURCES OF AIR POLLUTION

INDUSTRY: Secondary Metal Industries **SECTION:**

PROCESS	EMISSION SOURCE	PL	CONTROL TECHNOLOGY	CAPITAL, OPERATING, ANNUALIZED COSTS, $	EFFY (%)	REL (%)	ENERGY S	ENERGY USE	ENVIR IMPACT	REMARKS	REF
Lead	Furnace	PM	Scrubber CP/CD Spray Scrubber		99.4		5			E=99.2% for d_{pa}< 3μmA. 3-stage scrubber with L/G=4x10^{-4}m^3/m^3 per stage.	
Lead	Furnace	PM	Filter Electro-statically Augmented Filter		99.97		4			E=99.97% for d_{pa}< 3μmA at full ESP power. ESP SCA = 8.9 m^2/m^3/s. Air/cloth=1.76m/min.	
Lead	Furnace	PM	Filter	116,844/m^3/s 66,556/m^3/s 80,280/m^3/s	99.5		1	9.6kW/m^3/s		E=99.3% for d_{pa}< 3μmA. Air/cloth = 0.93 m/min.	
Lead	Furnace	PM	Filter	105,697/m^3/s 65,173/m^3/s 77,588/m^3/s	96.5		1	8.4kW/m^3/s		E=96.3% for d_{pa}< 3μmA. Air/cloth = 3.1 m/min.	

TABLE 10.8-11

CONTROL TECHNOLOGY FOR STATIONARY SOURCES OF AIR POLLUTION

INDUSTRY: Secondary Metal Industries **SECTION:**

PROCESS	EMISSION SOURCE	PL	CONTROL TECHNOLOGY	CAPITAL, OPERATING, ANNUALIZED COSTS, $	EFFY (%)	REL (%)	ENERGY S	ENERGY USE	ENVIR IMPACT	REMARKS	REF
Lead	Furnace	PM	Filter	107,203/m^3/s 66,130/m^3/s 78,722/m^3/s	92.5		1	11.0kW/m^3/s		E=91.5% for d_{pa}< 3μmA. Air/cloth = 5.5 m/min.	
Lead	Furnace	PM	Scrubber Calvert Collision Scrubber	25,512/m^3/s 98,849/m^3/s 10,300/m^3/s	96.6		2	4.2kW/m^3/s		E=90% for d_{pa}< 3μmA at a scrubber pressure drop of 21 cm W.C.	
Lead	Furnace	PM	Scrubber Venturi	51,750/m^3/s 100,387/m^3/s 108,809/m^3/s	99.7		1	5.0kW/m^3/s		E=98.6% for d_{pa}< 3μmA at a scrubber pressure drop of 26 cm W.C.	
Lead	Furnace	PM	ESP	45,269/m^3/s 38,685/m^3/s 44,002/m^3/s	80.0		1	2.6kW/m^3/s		E=75% for d_{pa}< 3μmA. Corona power = 132 W/m^3/s. SCA = 25m^2/m^3/s.	

TABLE 10.8-11

CONTROL TECHNOLOGY FOR STATIONARY SOURCES OF AIR POLLUTION

INDUSTRY: Secondary Metal Industries **SECTION:**

PROCESS	EMISSION SOURCE	PL	CONTROL TECHNOLOGY	CAPITAL, OPERATING, ANNUALIZED COSTS, $	EFFY (%)	REL (%)	S	ENERGY USE	ENVIR IMPACT	REMARKS	REF
Lead	Furnace	PM	ESP	45,269/m^3/s	92.0		1	4.2kW/m^3/s		E=90% for dpa< 3μmA.	
				39,877/m^3/s						Corona power = 487 W/m^3/s.	
				45,194/m^3/s						SCA = 25m^2/m^3/s.	

TABLE 10.8-12

CONTROL TECHNOLOGY FOR STATIONARY SOURCES OF AIR POLLUTION

INDUSTRY: Secondary Metal Industries

SECTION:

PROCESS	EMISSION SOURCE	PL	CONTROL TECHNOLOGY	CAPITAL, OPERATING, ANNUALIZED COSTS, $	EFFY (%)	REL (%)	S	ENERGY USE	ENVIR IMPACT	REMARKS	REF
Zinc	Vertical refining retort	PM	Scrubber CP/CD Spray Scrubber		99.1		5			E=98.9% for d_{pa}< 3μmA. 3-stage scrubber with L/G=4x10^{-4}m^3/m^3 per stage.	
Zinc	Vertical refining retort	PM	Filter Electro-statically Augmented Filter		99.94		4			E=99.94% for d_{pa}< 3μmA at full ESP power. ESP SCA = 8.9m^2/m^3/s. Air/cloth = 1.76m^3/min.	
Zinc	Vertical refining retort	PM	Filter	43,299/m^3/s 29,227/m^3/s 34,900/m^3/s	99.5		1	7.3kW/m^3/s		E=99.5% for d_{pa}< 3μmA. Air/cloth = 0.93 m/min.	
Zinc	Vertical refining retort	PM	Filter	43,895/m^3/s 29,015/m^3/s 34,171/m^3/s	95.7		1	7.7kW/m^3/s		E=95.4% for d_{pa}< 3μmA. Air/cloth = 3.1 m/min.	

TABLE 10.8-12

CONTROL TECHNOLOGY FOR STATIONARY SOURCES OF AIR POLLUTION

INDUSTRY: Secondary Metal Industries **SECTION:**

PROCESS	EMISSION SOURCE	PL	CONTROL TECHNOLOGY	CAPITAL, OPERATING, ANNUALIZED COSTS, $	EFFY (%)	REL (%)	S	ENERGY USE	ENVIR IMPACT	REMARKS	REF
Zinc	Vertical refining retort	PM	Filter	46,458/m³/s 30,266/m³/s 35,723/m³/s	89.4		1	10.6kW/m³/s		E=88.4% for d_{pa}< 3μmA. Air/cloth = 5.5 m/min.	
Zinc	Vertical refining retort	PM	Scrubber Calvert Collision Scrubber	21,776/m³/s 46,000/m³/s 49,550/m³/s	91.4		2	8.2kW/m³/s		E=90% for d_{pa}< 3μmA at a scrubber pressure drop of 45 cm W.C.	
Zinc	Vertical refining retort	PM	Scrubber Venturi	39,151/m³/s 49,141/m³/s 55,513/m³/s	91.8		1	13.8kW/m³/s		E=90% for d_{pa}< 3μmA at a scrubber pressure drop of 78 cm W.C.	
Zinc	Vertical refining retort	PM	Scrubber Venturi	29,859/m³/s 45,084/m³/s 49,943/m³/s	79.0		1	5.7kW/m³/s		E=75% for d_{pa}< 3μmA at a scrubber pressure drop of 30 cm W.C.	

TABLE 10.8-12

CONTROL TECHNOLOGY FOR STATIONARY SOURCES OF AIR POLLUTION

INDUSTRY: Secondary Metal Industries

SECTION:

PROCESS	EMISSION SOURCE	PL	CONTROL TECHNOLOGY	CAPITAL, OPERATING, ANNUALIZED COSTS, $	EFFY (%)	REL (%)	S	ENERGY USE	ENVIR IMPACT	REMARKS	REF
Zinc	Vertical refining retort	PM	ESP	17,587/m^3/s 16,495/m^3/s 18,561/m^3/s	79.0		1	2.4kW/m^3/s		E=75% for d_{pa}< 3μmA. Corona power = 282 W/m^3/s. SCA = 25 m^2/m^3/s.	
Zinc	Vertical refining retort	PM	ESP	17,587/m^3/s 18,037/m^3/s 20,103/m^3/s	91.5		1	5.6kW/m^3/s		E=90% for d_{pa}< 3μmA. Corona power = 1,958W/m^3/s. SCA = 25 m^2/m^3/s.	

SECTION 10

REFERENCES

Air Pollution Control Association, 1979. Control of Air Emissions from Coke Plants. Conference Proceedings, Pittsburg, Pennsylvania, 192 pp.

Bee, R.W., G. Erskine, R. B. Shaller, R. W. Speutek, A. Wallo III, and W. L. Wheaton, 1974. Coke Oven Charging Emission Control Test Program-Volume I. EPA-650/2-79-062, U. S. Environmental Protection Agency, Washington, D.C., 163 pp.

Caine, R.E., Jr., 1977. Development of Technology for Controlling BOP Charging Emissions. EPA 600/2-77-218, U. S. Environmental Protection Agency, Washington, D.C., 157 pp.

California Air Resources Board, 1980. Emission Inventory System Computer Data; Metallurgical Sources, Sacramento, California.

Camp, J. M. and C. B. Francis, 1951. The Making, Shaping and Treating of Steel, 6th Edition. United States Steel Company, Pittsburgh, Pennsylvania, 1584 pp.

Coleman, R. T. and R. Vandervort, 1980. Evaluation of Paul Bergsoe and Son Secondary Lead Smelter. EPA 600/2-80-022, U. S. Environmental Protection Agency, Washington, D.C.,95pp.

Cooper, Fred, Thomas Loch, John Mutchler, and Janet Vecchio, 1977. Emission Testing and Evaluation of Ford/Koppers Coke Pushing Control System, Vol. I, Final Report. EPA-600/2-77-187a, U. S. Environmental Protection Agency, Washington D.C., 263 pp.

Danielson, John A., editor, 1973. Air Pollution Engineering Manual, 2nd Edition. AP40, U. S. Environmental Protection Agency, Washington, D.C., 892 pp.

Dawson, P. R., 1979. The WSL Approach to Metallurgical Fume Emissions. In: Control of Particulate Emissions in the Primary Nonferrous Metals Industry: Symposium Proceedings. EPA 600/2-79-211, U. S. Environmental Protection Agency, Cincinnati, Ohio, 414-433 pp.

Hardison, L. C. and C. A. Greathouse, 1972. Air Pollution Control Technology and Costs in Nine Selected Areas. APTD-1555, U. S. Environmental Protection Agency, Durham, North Carolina, 587 pp.

Hussain, S. M., P. F. Cilicone, A. B. Cherry, W. J. Wasylenko, Jr., 1979. Applicability of Coke Plant Control Technology to Coal Conversion. EPA 600/7-79-189, U. S. Environmental Protection Agency, Washington, D.C., 200 pp.

Jaasund, S. A. and M. R. Mazer, 1977. the Applicaton of Wet Electrostatic Precipitators for the Control of Emissions from Three Metallurgical Processes. In: Proceeding: Particulate Collection Problems Using ESP's in the Metallurgical Industry. EPA 600/2-77-208, U. S. Environmental Protection Agency, Research Triangle Park, North Carolina, 1-22 pp.

Jacko, R. B. and D. W. Neuendorf, 1977. Trace Metal Particulate Emission Test Results from a Number of Industrial and Municipal Point Sources. Journal of the Air Pollution Control Association, 27:989-994 pp.

Jacko, Robert B., 1979. Fugitive Emissions from the By-Product Coke Oven Pushing Operation. In: Third Symposium on Fugitive Emissions Measurement and Control. EPA-600/7-79-182, U. S. Environmental Protection Agency, Washington, D.C., pp 91-102.

Jutze, George A., et al., 1977. Technical Guidance for Control of Industrial Process Fugitive Particle Emissions. EPA 450/3-77-010, U. S. Environmental Protection Agency, Washington, D.C., 447 pp.

Lee, Jr., E., H. L. Grist, A. E. Riley, K. E. MacLeod, 1975. Concentration and Size of Trace Metal Emissions from a Power Plant, a Steel Plant, and a Cotton Gin. Environmental Science and Technology, 9:643-694 pp.

Liddell, D. M., 1945. Handbook of Nonferrous Metallurgy: Principles and Processes, 2nd Edition. McGraw-Hill, New York, New York, 656 pp.

May, W. P., 1977. Blast Furnace Cast House Emission Control Technology Assessment. EPA 600/277231, U. S. Environmental Protection Agency, Research Triangle Park, North Carolina, 158 pp.

Minicucci, D., M. Herther, L. Babb, and W. Kuby, 1980. Assessment of Control Technology for Stationaary Sources, Vol. II: Control Technology Data Tables. California Air Resources Board, Contract No. A212030, Sacramento, California.

McCrillis, Robert, 1978. Basic Iron Blast Furnace Cast House Emissions and Emissions Control. Presented at 71st Annual Meeting of the Air Pollution Control Association, Houston, Texas.

National Air Pollution Control Administration, 1969. Air Pollution Aspects of Brass and Bronze Smelting and Refining Industry. AP53, U. S. Department of Health, Education, and Welfare, 63 pp.

Oglesby, S., Jr., 1970. A Manual of Electrostatic Precipitation Technology, Part II Application Areas. Contract CPA2269-73, National Air Pollution Control Administration, Cincinnati, Ohio.

Steelhammer, J. C., D. R. Nogash, and D. M. Polizzotti, 1977. Laboratory Electrostatic Precipitators Studies Related to the Steel Industry. In: Proceedings: Particulate Collection Problems Using ESP's in the Metallurgical Industry. EPA 600/277208, U. S. Environmental Protection Agency, Research Triangle Park, North Carolina, 5471 pp.

Szabo, Michael F. and R. W. Gerstle, 1978. Operation and Maintenance of Particulate Control Devices on Selected Steel and Ferroalloy Processes. EPA 600/278037, U. S. Environmental Protection Agency, Research Triangle Park, North Carolina, 247 pp.

Taback, H. J., A. R. Brienza, J. Marko, N. Brunetz, 1979. Fine Particle Emissions from Stationary and Miscellaneous Sources in the South Coast Air Basin. California Air Resources Board, Sacramento, California, 561 pp.

Yung, S. C., J. Curran and S. Calvert. Spray Charging and Trapping Scrubber for Fugitive Emission Control. EPA-600/7-81-125, July 1981.