Final Report

Quantification of Evaporative Running Losses from Light-Duty Gasoline-Powered Trucks

for the

California Air Resources Board
Mobile Source Division
CARB Agreement No. A992-224

November 3, 1992

by

Dennis McClement
Principal Investigator

Automotive Testing Laboratories, Inc.
32152 State Route 2
New Carlisle, Indiana 46552

Abstract

The purpose of this effort was to collect Running Loss Emission Data on a representative cross section of in-use, light-duty trucks to support the development of California specific emission factors. Eighteen randomly procured vehicles were tested. A total of 76 sequences were performed. Tests were performed using fuels at 9.0 psi RVP, ambient temperatures of 45, 95 and 105°F, and the LA-4 and NYCC driving sequences. Modified SHED sequences were performed on six vehicles. Results were consistent with previous studies.

Acknowledgment

This report was submitted in fulfillment of CARB Agreement No. A992-224, "Quantification of Evaporative Running Losses from Light-Duty Gasoline-Powered Trucks", under the sponsorship of the Mobile Source Division of the California Air Resources Board. Work was completed in August of 1991.

Disclaimer

"The statements and conclusions in this report are those of the contractor and not necessarily those of the California Air Resources Board. The mention of commercial products, their source or their use in connection with material reported herein is not to be construed as either an actual or implied endorsement of such products."

Table of Contents

List of Figures

List of Tables

I. Summary and Conclusions

The purpose of this study was to gather more data relating to hydrocarbon (HC) evaporative emissions during vehicle operation (running losses). This study focused on vehicles certified as light-duty trucks. This class of vehicle makes up a significant fraction of the southern California in-use vehicle fleet.

Running loss data collected to date by the US Environmental Protection Agency (EPA) has focused on national climatic conditions, nationally available fuels, and a projection of the future in-use fleet. A study recently completed for the Research Division of the California Air Resources Board (CARB) added a substantial amount of data to the Federal set with additional data for older vehicles, lower Reid Vapor Pressure (RVP) fuels, and higher ambient temperatures. This study compliments the recent CARB study.

A total of seventy-six tests were performed on eighteen light-duty trucks. Tests were performed at ambient temperatures of 45, 95, and 105 °F. Two driving cycles used were: the LA-4 used for new vehicle certification, and the New York City Cycle (NYCC) designed for much lower average speed. Four tests using each possible combination of the higher two temperatures and two driving cycles were performed on all vehicles. Additional tests were performed at 45° on two vehicles using each of the two driving cycles (four additional tests total).

Additional Sealed Housing for Evaporative Determination (SHED) tests were performed on six vehicles. During incoming canister normalization, a 60 to 84 °F diurnal heat build (fuel temperature rise) was performed at an air temperature 75 °F. Following the initial 95 °F LA-4 running loss test, the vehicle was transferred to the SHED enclosure for a one hour hot soak loss test at 95 °F. Following the final 105 °F NYCC running loss test, the vehicle was again returned to the SHED enclosure for a one hour hot soak loss test at an ambient temperature of 105 °F. A total of six diurnal tests and twelve hot soak tests were performed. Three out of six vehicles tested were port fuel injected vehicles, the remaining three were carbureted vehicles.

Table 1 summarizes the tests performed on each vehicle in the fleet. "Base" refers to the four tests performed at 95 °F and 105 °F with two test cycles. "45°" refers to running loss tests performed at 45 °F. "SHED" refers to the six diurnal and twelve hot soak tests.

Table 1.
Tests Performed by Vehicle

Veh	Model Year	Make	Model	Induct	base	45°	SHED
SB-36	1983	Ford	F-150	2V	X	-	-
SB-38	1985	Toyota	Pickup	2V	X	-	-
SB-39	1988	Nissan	Pickup	TBI	X	-	-
SB-40	1989	Chevrolet	1500	TBI	X	-	-
SB-41	1985	Ford	Ranger	PFI	X	-	-
SB-42	1984	Mazda	B2000	2V	X	-	-
SB-43	1988	Dodge	Ram 100	TBI	X	-	-
SB-44	1989	Dodge	Ram 250	TBI	X	-	-
SB-45	1984	Toyota	4 Runner	2V	X	-	-
SB-46	1987	Chevrolet	Astro Van	TBI	X	-	-
SB-47	1986	Toyota	Pickup	2V	X	-	-
SB-48	1988	Ford	F-150	PFI	X	X	X
SB-49	1986	Nissan	Pickup	TBI	X	-	-
SB-50	1986	Ford	Aerostar	PFI	X	X	X
SB-51	1989	Toyota	Pickup	PFI	X	-	X
SB-52	1980	Toyota	Pickup	2V	X	-	X
SB-53	1975	Chevrolet	Pickup	2V	X	-	X
SB-54	1978	Chevrolet	C-10	4V	X	-	X

The running loss results observed were consistent with expected levels for light-duty vehicles. In general, the fuel tank temperature targets observed with pick-up trucks were lower than observed with passenger cars. This was attributed to differences in air circulation around the fuel tanks caused by such vehicle design factors as road clearance. Running losses, which are strongly affected by fuel temperatures, were correspondingly lower with the light duty truck sample.

As in previous studies, the effects of driving cycle on total running losses were mixed. It appears that the specific evaporative canister purge strategy varied by vehicle manufacturer. However, on a grams per mile basis, running loss emissions for the low speed NYCC cycle were always greater than the moderate speed FTP cycle.

Running loss emissions observed on the two vehicles at 45 °F were significantly greater than zero. Past modeling practice has been to assume zero running loss emissions at 45 °F based on a linear extrapolation of results at higher temperatures. The results measured with these two vehicles contradict that assumption.

II. Recommendations

This study compliments the recently completed study entitled "Quantification of Evaporative Running Loss Emissions from Gasoline-Powered Passenger Cars in California" dated December 6, 1991. The previous study focused on light-duty passenger cars, while this study was restricted to light-duty trucks. The results of this study were consistent with the previous study.

This study focused on different driving cycles, temperatures, and vehicle technologies at one RVP level. Running loss emissions were measured and reported at fixed intervals throughout each test, permitting the effect of duration of vehicle operation to be analyzed. In addition to the fixed time intervals for each test type, the distance traveled during each phase is reported. This permits analysis on a grams per mile basis.

The results of this study should be examined in conjunction with the previous EPA and CARB data sets to derive complete emission factor estimates for the California in-use fleet. As in previous studies, the modeler should be particularly aware of the two modes of evaporative emission behavior. The first mode, previously labeled Type I, may be characterized as fairly low level, constant running loss emissions which dominate immediately following vehicle startup, and throughout tests performed at low RVP and temperatures. The second type, Type II, are much higher levels of running loss emissions which dominate following saturation of the evaporative control system. Type II emissions follow theoretical trends for uncontrolled evaporative emissions, and respond directly to higher temperatures, higher RVP and trip type.

The results of the four tests performed at 45 °F revealed that running losses were significantly greater than zero. Previously, the running loss emission results from higher temperatures had been linearly extrapolated and determined as zero emissions at 45 °F. Additional testing will be required to fully characterize running loss emissions at temperatures below 80 °F.

The limited SHED testing results suggest that the results of a SHED test cannot be used to directly predict running loss emission results, although directional trends were noted. The high emitting carbureted vehicles included in this study displayed relatively high SHED results and relatively high running loss results. Ongoing EPA studies of evaporative control system component failures have demonstrated that improperly operating vapor control systems will result in vehicles which fail both the SHED and running loss tests.

III. Procedures

The methods that were used to collect data are summarized in this section. First, vehicle procurement procedures are outlined. Next, the methodology used to determine realistic fuel tank temperature targets for the dynamometer test, including the specific dyno driving cycles, is discussed. The test fuels and temperatures used are displayed as a matrix. The section is concluded with a synopsis of the measurement hardware, test procedures, and quality assurance program.

A. Test Vehicle Selection

The primary purpose of this program was to gather running loss emission data on light-duty trucks. While a significant fraction of the in-use vehicle fleet in southern California are trucks, few running loss tests were performed on this type of vehicle during previous EPA sponsored programs.

Running loss emissions depend on the conventional evaporative emission control devices present on the vehicle. This hardware has evolved over time to current levels of stringency. Representative samples of technology groupings (by model year) and by manufacturer were included in the final sample.

During the EPA Emission Factors (EF) testing of current technology vehicles, differences related to technology groupings were noted in both exhaust and evaporative emissions. This program includes examples of carbureted, throttle body injection, and port fuel injection technology vehicles to insure representation of these factors.

Table 2 summarizes the vehicle sample population demographics. Eighteen light-duty trucks were procured from the South Bend, Indiana vehicle population. Most vehicles were procured following direct mail solicitations generated from vehicle registration lists. The older vehicles were procured from owners known to laboratory personnel. The vehicle owners were supplied with an exchange loan vehicle, a full tank of gas, and a cash incentive for participation in the program. Each incoming vehicle was inspected to insure that the evaporative emission control system was not tampered and was representative of the in-use population.

Table 2.
Test Vehicle Technology Groupings

Fuel System	Model Years	Qty	Evap Control Technology
Carbureted	1975-1977	1	Canister
Carbureted	1978-1980	2	6g SHED
Carbureted	1981-1989	5	2g SHED
Multipoint FI	1982-1989	4	2g SHED
Throttle Body FI	1982-1989	6	2g SHED

B. Fuel Temperature Profiles

During testing for diurnal evaporative emissions, external heat is applied to the vehicle fuel tank to achieve a fuel temperature rise of 24° from 60 to 84 °F[1]. A number of studies performed at temperatures outside of the this temperature envelope demonstrated the strong relationship between tank fuel temperatures and HC vapor generation. This temperature sensitivity was also found to hold during running loss testing[2]. Testing was performed using fuel temperature profiles which matched temperatures observed during operation of a similar vehicle on a closed test track.

Track fuel temperature data was collected using a methodology which parallels dynamometer procedures. An in-tank, wetted fuel temperature thermocouple was installed in a test vehicle. The fuel tank was drained and filled to 40% capacity with 9.0 psi certification grade test fuel, and then soaked overnight at elevated temperature. An estimated temperature for the next day's track run was used as a soak temperature. The vehicle was moved out doors as the time for the track run approached, and the fuel temperature was allowed to stabilize at ambient temperature. The fuel temperature was required to match the ambient out door temperature on the track within ±3 °F at the start of the run.

Test vehicles were towed or pushed to a staging area adjacent to the test track prior to the start of a run. Each track run was started from a "cold start" using standard

---

1 Code of Federal Regulations (CFR), Title 40, Part 86, Subpart B § 86.133-78 Diurnal breathing loss test.

2 US. Environmental Protection Agency. Office of Mobile Sources, "Running Loss Test Program: Interim Results," November 30, 1988, updated November 1989.

dynamometer engine starting procedures. The vehicle engine remained off until the vehicle was ready to enter the prescribed driving schedule.

The lead vehicle was equipped with a fifth wheel, tach generator and driver's aid. The driver's aid was loaded with a predrawn speed-time schedule matching the speed-time trace which was to be followed during running loss dynamometer testing. The fifth wheel and tach generator provided a real-time speed signal to the driver's aid. The vehicle operator actuated the driving schedule, and then controlled the vehicle accelerator and brakes to cause the vehicle speed to follow the prescribed trace at the prescribed time. A second vehicle operator steered the vehicle while the first operator watched the driving schedule.

One or more test vehicles followed the lead vehicle as it was operated on the track. Hand held thermocouple readouts were used to monitor fuel temperatures during driving. Fuel temperatures were recorded in each test vehicle at times corresponding to the sampling points during a dynamometer test. The initial temperature was subtracted from each reading to develop a dynamometer fuel temperature profile.

The base running loss dynamometer driving schedule is three replications of the 1372 second LA-4[3] driving schedule. This results in slightly more than one hour of continuous vehicle operation. Each LA-4 is divided into two segments, 0 to 505 seconds and 505 to 1372 seconds. During a dynamometer test, exhaust emission samples in each segment are collected in separate Constant Volume Sampler (CVS) sample bags. Running loss results are referred to by the six corresponding exhaust emission "bag" results. Fuel temperature profiles are defined at the end of each of the six bag sample points. Test vehicles are operated on a test track using three repetitions of the LA-4 driving schedule. Fuel temperatures are recorded at the end of each bag sample point. The rise observed during the track runs are translated to targets to be achieved at the six sample points during the dynamometer runs.

Exhaust emissions during a 598 second New York City Cycle (NYCC) test are collected in a single CVS bag. The NYCC driving schedule is repeated six times during a running loss test to achieve a nominal one hour of continuous vehicle operation. The initial track temperature studies[4] demonstrated that fuel temperatures are driven more by the

---

3 CFR, Title 40, Part 86, Appendix I - Urban Dynamometer Schedules, (a) Light-Duty Vehicles

4 Automotive Testing Laboratories, Inc. "Driving Cycle Effect on Tank Fuel Temperature" Final Report, Work Assignment 1-6, EPA Contract 68-03-3380, July 29, 1988.

length of vehicle operation time than by average speed of the driving cycle, given similar ambient test conditions for both test runs. Dynamometer temperature profiles for NYCC testing therefore are derived from LA-4 track results by interpolating actual segment times. For example, the 598 second and 1196 second dynamometer fuel temperature targets for a NYCC test are linearly interpolated from the 505 and 1372 LA-4 track temperature results. Targets for other driving cycles can be similarly derived.

Figures 1 and 2 graphically display the relative speeds of LA-4 and NYCC driving cycles. The nominal 7.5 mile distance traveled during an LA-4 results in an average speed of 19.7 mph. The standard Federal Test Procedure (FTP) includes two repetitions of the first 505 seconds of the LA-4, resulting in an average speed of 21.3 mph. The 1.18 nominal distance of the NYCC schedule results in an average speed of 7.1 mph. The NYCC also includes a higher fraction of idle time than the LA-4. A listing of the NYCC speed/time schedule is included in Table 3.

Temperature profiles were drawn from the existing data base[5,6] whenever similar vehicles were procured for this program. Most of the older technology vehicles required track temperatures for the running loss test. This data was collected on the Bendix Automotive Proving Grounds in New Carlisle, Indiana. Primary criteria for valid track data collection include pavement temperatures more than 25 °F above ambient, wind speeds less than 10 mph, and opaque cloud cover less than 10%. These criteria were developed during EPA testing to correspond to ozone exceedence conditions.

Two track profiles were collected for the vehicles in this program which were tested at 45 °F. The first was collected during cool weather, clear sunlight conditions during the winter months. The second was collected under clear sunlight summer conditions. Less than one degree difference was noted between total rise with both vehicles studied.

C. Test Fuel

Howell Hydrocarbon EEE certification grade fuel meeting 40 CFR 86.113-90 specifications was used for all testing. No oxygenates were present in the fuel.

---

5 Automotive Testing Laboratories, Inc. "Determination of Tank Fuel Temperature Excursions", Final Report, Work Assignment 0-1, EPA Contract 68-C9-0027, January 9, 1990.

6 Automotive Testing Laboratories, Inc. "Determination of Tank Fuel Temperature Excursions", Final Report, Work Assignment 1-1, EPA Contract 68-C9-0027, November 13, 1990.

Figure 1
LA-4 Driving Schedule

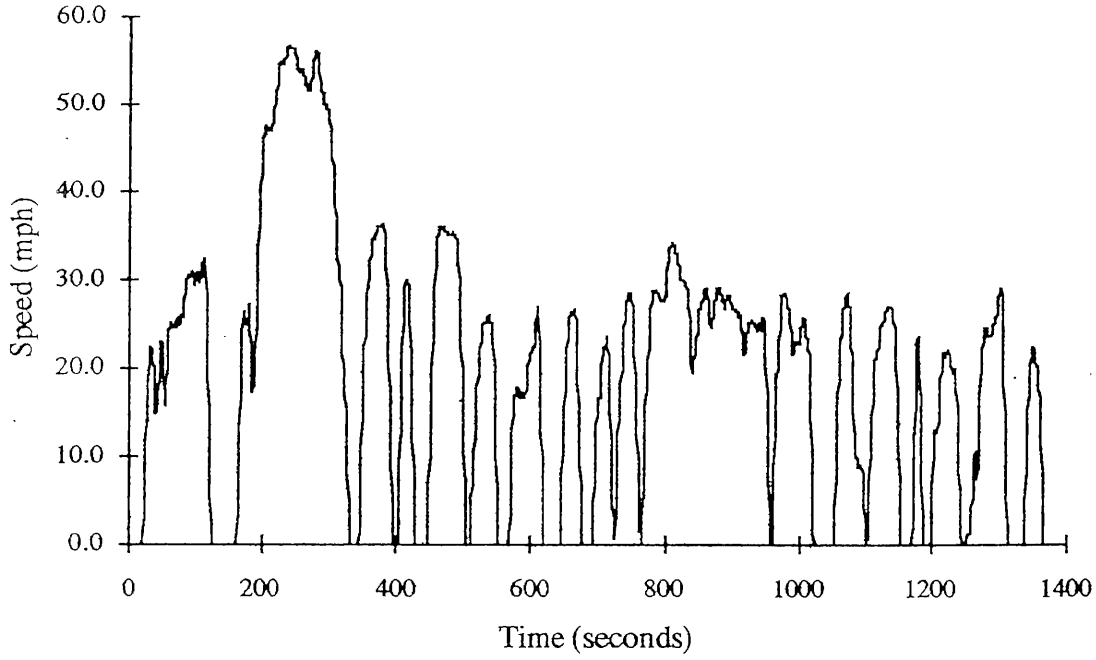

Figure 2.
NYCC Driving Schedule

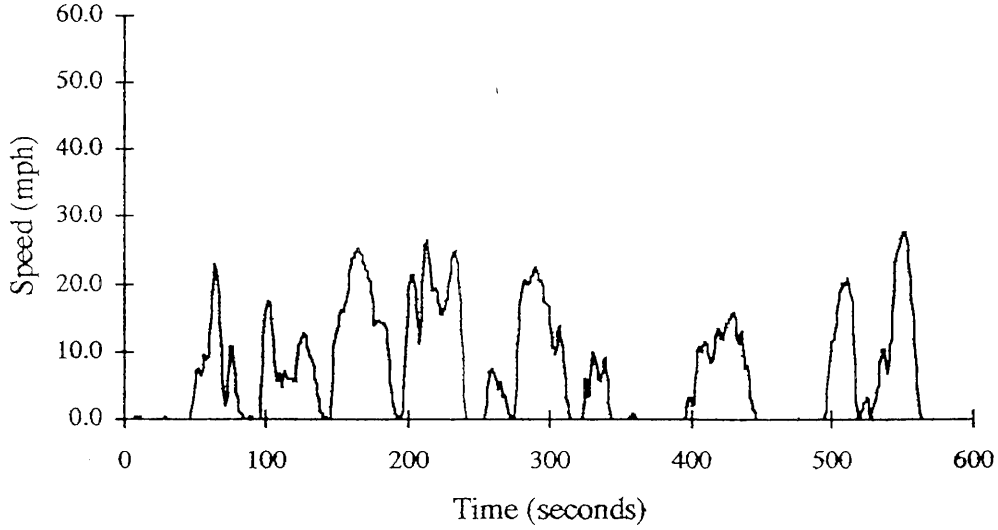

Table 3.
New York City Cycle (NYCC) Speed vs. Time Schedule

time	mph	time	mph	time	mph	time	mph	time	mph	time	mph
1	0.0	51	7.0	101	17.4	151	15.1	201	20.7	251	0.0
2	0.0	52	7.6	102	17.3	152	16.2	202	21.4	252	0.0
3	0.0	53	7.6	103	17.2	153	15.9	203	21.4	253	0.0
4	0.0	54	6.2	104	15.1	154	16.0	204	20.5	254	0.0
5	0.0	55	6.4	105	11.2	155	16.8	205	19.0	255	0.2
6	0.0	56	7.6	106	8.6	156	17.5	206	16.7	256	2.0
7	0.0	57	9.5	107	5.9	157	18.0	207	13.1	257	4.5
8	0.3	58	8.9	108	5.4	158	19.6	208	11.2	258	6.4
9	0.0	59	8.6	109	6.8	159	21.7	209	14.9	259	7.2
10	0.2	60	9.6	110	6.9	160	23.1	210	19.8	260	7.6
11	0.3	61	12.4	111	4.8	161	23.7	211	23.8	261	7.2
12	0.0	62	15.0	112	5.7	162	24.1	212	25.7	262	6.6
13	0.0	63	17.8	113	7.1	163	24.5	213	26.2	263	6.5
14	0.0	64	21.0	114	6.8	164	25.0	214	26.4	264	5.1
15	0.0	65	22.9	115	5.9	165	25.2	215	23.3	265	4.4
16	0.0	66	21.7	116	6.0	166	24.6	216	19.6	266	5.5
17	0.0	67	18.2	117	6.0	167	24.3	217	18.9	267	3.0
18	0.0	68	14.5	118	5.9	168	23.3	218	19.3	268	3.4
19	0.0	69	10.2	119	5.6	169	22.7	219	19.4	269	3.0
20	0.0	70	5.6	120	5.5	170	22.1	220	18.5	270	2.9
21	0.0	71	2.5	121	7.2	171	21.6	221	17.5	271	1.3
22	0.0	72	2.1	122	9.9	172	21.1	222	16.4	272	0.8
23	0.0	73	3.1	123	10.8	173	20.3	223	15.6	273	0.3
24	0.0	74	5.7	124	11.4	174	19.2	224	15.6	274	0.0
25	0.0	75	9.0	125	11.9	175	17.0	225	16.0	275	0.0
26	0.0	76	10.8	126	12.1	176	13.9	226	16.8	276	0.3
27	0.0	77	10.8	127	12.6	177	14.1	227	17.5	277	4.7
28	0.1	78	9.5	128	12.3	178	14.6	228	18.0	278	9.7
29	0.2	79	6.5	129	10.6	179	14.6	229	19.6	279	13.9
30	0.0	80	3.9	130	9.9	180	14.5	230	21.7	280	16.7
31	0.0	81	2.6	131	9.4	181	14.4	231	23.5	281	19.1
32	0.0	82	1.0	132	8.9	182	14.2	232	24.6	282	20.5
33	0.0	83	0.8	133	7.6	183	14.2	233	25.0	283	20.5
34	0.0	84	0.1	134	6.1	184	13.2	234	24.3	284	19.7
35	0.0	85	0.0	135	5.0	185	11.5	235	23.1	285	19.9
36	0.0	86	0.0	136	3.7	186	8.4	236	20.7	286	20.4
37	0.0	87	0.0	137	2.6	187	5.5	237	17.2	287	20.9
38	0.0	88	0.0	138	1.0	188	3.7	238	13.5	288	21.4
39	0.0	89	0.3	139	0.8	189	2.9	239	9.2	289	21.9
40	0.0	90	0.2	140	0.1	190	1.3	240	3.3	290	22.4
41	0.0	91	0.0	141	0.4	191	0.8	241	0.0	291	22.1
42	0.0	92	0.0	142	0.2	192	0.3	242	0.0	292	21.4
43	0.0	93	0.0	143	0.0	193	0.1	243	0.0	293	20.8
44	0.0	94	0.0	144	0.0	194	0.1	244	0.0	294	20.3
45	0.0	95	0.0	145	0.0	195	0.0	245	0.0	295	20.5
46	0.0	96	0.0	146	1.3	196	1.3	246	0.0	296	19.3
47	0.0	97	2.7	147	6.0	197	3.9	247	0.0	297	17.3
48	0.4	98	8.3	148	10.2	198	9.9	248	0.0	298	17.1
49	2.8	99	12.4	149	12.1	199	15.9	249	0.0	299	16.7
50	5.6	100	15.7	150	13.8	200	19.3	250	0.0	300	14.3

Table 3 (cont.)
New York City Cycle (NYCC) Speed vs. Time Schedule

time	mph	time	mph	time	mph	time	mph	time	mph	time	mph
301	11.9	351	0.0	401	2.3	451	0.0	501	11.8	551	27.7
302	10.7	352	0.0	402	4.6	452	0.0	502	12.2	552	27.6
303	10.2	353	0.0	403	7.8	453	0.1	503	14.3	553	27.3
304	9.4	354	0.0	404	9.9	454	0.0	504	16.0	554	25.7
305	10.6	355	0.0	405	10.7	455	0.0	505	17.8	555	23.3
306	12.8	356	0.1	406	10.2	456	0.0	506	18.6	556	20.6
307	13.7	357	0.3	407	10.1	457	0.0	507	19.6	557	17.8
308	12.3	358	0.5	408	10.7	458	0.0	508	20.2	558	14.9
309	10.4	359	0.6	409	10.9	459	0.0	509	19.9	559	11.3
310	8.6	360	0.5	410	11.4	460	0.0	510	19.7	560	7.4
311	5.5	361	0.2	411	11.1	461	0.0	511	20.8	561	4.6
312	3.2	362	0.0	412	10.0	462	0.0	512	21.0	562	1.7
313	2.0	363	0.0	413	8.8	463	0.0	513	18.8	563	0.7
314	0.6	364	0.0	414	8.2	464	0.0	514	17.6	564	0.0
315	0.0	365	0.0	415	8.6	465	0.0	515	13.0	565	0.0
316	0.0	366	0.0	416	10.2	466	0.0	516	7.5	566	0.0
317	0.0	367	0.0	417	11.8	467	0.0	517	2.9	567	0.0
318	0.0	368	0.1	418	13.0	468	0.0	518	0.8	568	0.0
319	0.0	369	0.0	419	13.3	469	0.0	519	0.0	569	0.0
320	0.0	370	0.0	420	12.8	470	0.0	520	0.2	570	0.0
321	0.0	371	0.0	421	11.7	471	0.0	521	0.7	571	0.0
322	0.0	372	0.1	422	11.7	472	0.0	522	1.4	572	0.0
323	0.0	373	0.1	423	12.4	473	0.0	523	2.3	573	0.0
324	2.5	374	0.0	424	13.7	474	0.0	524	2.7	574	0.0
325	6.1	375	0.0	425	14.4	475	0.0	525	3.0	575	0.0
326	5.5	376	0.0	426	14.3	476	0.0	526	2.7	576	0.0
327	3.2	377	0.0	427	14.7	477	0.0	527	1.2	577	0.0
328	3.6	378	0.0	428	15.1	478	0.0	528	0.1	578	0.0
329	6.1	379	0.0	429	15.3	479	0.0	529	0.7	579	0.0
330	9.1	380	0.0	430	15.8	480	0.0	530	1.8	580	0.0
331	9.8	381	0.0	431	14.5	481	0.0	531	3.1	581	0.0
332	8.6	382	0.0	432	12.2	482	0.0	532	3.9	582	0.0
333	6.8	383	0.0	433	11.1	483	0.0	533	5.3	583	0.0
334	5.9	384	0.0	434	12.0	484	0.0	534	7.8	584	0.0
335	5.6	385	0.0	435	13.1	485	0.0	535	9.7	585	0.0
336	6.0	386	0.0	436	12.2	486	0.0	536	10.3	586	0.0
337	7.2	387	0.0	437	8.9	487	0.0	537	10.2	587	0.0
338	8.4	388	0.0	438	7.7	488	0.0	538	9.4	588	0.0
339	9.3	389	0.0	439	7.6	489	0.0	539	7.1	589	0.0
340	7.6	390	0.0	440	8.0	490	0.0	540	6.8	590	0.0
341	5.5	391	0.0	441	5.5	491	0.0	541	8.9	591	0.0
342	2.5	392	0.0	442	3.3	492	0.0	542	10.6	592	0.0
343	0.1	393	0.0	443	2.4	493	0.0	543	11.9	593	0.0
344	0.0	394	0.0	444	1.4	494	0.0	544	15.5	594	0.0
345	0.0	395	0.0	445	0.6	495	0.0	545	19.6	595	0.0
346	0.0	396	0.2	446	0.0	496	1.0	546	22.8	596	0.0
347	0.0	397	1.6	447	0.0	497	4.1	547	25.1	597	0.0
348	0.0	398	3.0	448	0.0	498	7.4	548	26.0	598	0.0
349	0.0	399	3.0	449	0.0	499	10.2	549	26.7		
350	0.0	400	2.1	450	0.0	500	11.3	550	27.3		

D. Test Matrix

Four tests were performed on each vehicle. Two ambient temperature levels, 95° and 105 °F, were included in the test matrix. Both the LA-4 and NYCC driving cycle test was performed on each vehicle at the two temperature levels. All tests were performed with 9.0 psi fuel.

Four additional tests were performed on vehicles SB-48 and SB-50. These vehicles were procured for initial testing during March of 1991. Fuel temperature profiles were generated on a test track during clear weather conditions. These profiles were used during running loss tests performed at an initial temperature of 45 °F. The same two vehicles were returned to the lab during July of 1991, retested on the track, and then subjected with the standard four test matrix using the newly generated fuel temperature profiles.

Test vehicles SB-48, 50, 51, 52, 53, and 54 received additional standard evaporative SHED tests. During incoming canister normalization tests, a standard diurnal heat build was performed on each of these vehicles. Preconditioning, soak, and SHED testing was performed at 75 °F. Fuel was heated from 60 to 84 °F in a one hour period for the diurnal test. Following the initial 95°/LA-4 sequence, the vehicle was placed in a SHED enclosure at 95 °F for a one hour hot soak loss test. Following the final 105°/NYCC sequence, the vehicle was again returned to the SHED enclosure for a one hour hot soak loss test.

E. Running Loss Measurement Hardware

Evaporative running loss emissions tests were performed in a SHED enclosure equipped with a conventional twin roll dynamometer. The enclosed SHED volume (5700 ft^3) was approximately twice the capacity of a conventional evaporative emission enclosure. Combustion air was provided directly to the operating vehicle engine from outside of the enclosure. Engine exhaust was routed from the vehicle to the outside of the enclosure into a Constant Volume Sampler (CVS). The base enclosure was fabricated to meet new vehicle certification specifications for evaporative emission testing, including standard temperature measurements, hydrocarbon analyzers, and materials. Additional air handling and cooling was added to manage the additional heat load from the operating vehicle and to permit testing at elevated temperatures (95-105 °F). Additional analyzers (CO and CO_2) were added to monitor the enclosure for vehicle exhaust leaks during the test.

An industry standard Clayton ECE-50 twin roll dynamometer was located inside enclosure. The direct drive variable flywheel equipped dyno was capable of inertia selection from 1000 to 6500 pounds in 125 pound increments. A 50 horsepower capacity

Power Absorption Unit (PAU) was used to simulate road horsepower load. A Clayton Road Load Power Control (RLPC) automatic load controller was used to control the PAU.

A Beckman 400 Hydrocarbon analyzer was used to measure HC levels inside the enclosure. The FID analyzer was operated on 60%He/40%H_2 and zero grade air. Calibrations were performed using gases traceable to EPA Ann Arbor standards and a gas divider. Named working gases were used to calibrate the analyzer before and after each reading.

Enclosure cooling was provided by three air conditioners equipped with freon to water heat exchanger/condensers. The three small air conditioning units were staged at 1/2° intervals. The lower individual capacity of the three AC units reduced the breathing of the enclosure which results from the large temperature cycles observed with a single, high capacity unit. A standard 5300 CFM Hartzell fan was used to provide under hood cooling. A variable speed blower was used for under vehicle and fuel tank temperature control. Fuel heating was provided by a convection heater/blower whose outlet was directed at the bottom surface of the vehicle fuel tank. Fuel heating was controlled automatically by a programmable temperature achiever. Electric resistance heaters were used to elevate the enclosure to 95° or 105 °F for the start of a test. The heaters were shut off at the start of the test. Vehicle heat, with cooling as required, was used to maintain the elevated temperatures inside the enclosure.

The running loss enclosure was fabricated with metal sheets and Tedlar doors and windows. Average ambient temperature probes were located midway along the interior long walls. Enclosure propane background, calibration, and retention checks were performed in accordance with CFR requirements[7], except the standard for the retention test were a maximum loss of 5% in a one hour period at 95° with all fans, air conditioners and blowers running.

A standard 2300 ft^3 SHED enclosure meeting current CFR regulations for evaporative testing was used for the diurnal and modified hot soak tests. A Beckman 400 FID was used to analyze HC levels in the enclosure.

---

7 CFR, Title 40, Part 86, Subpart B § 86.117-78 Evaporative Emission Enclosure Calibrations.

Running loss evaporative emissions were calculated using standard CFR procedures for diurnal emissions[8]:

$$M_{HC} = \frac{.208(12+2.33)}{10^4} V_n \left[\frac{C_{HCf}P_{Bf}}{T_f} - \frac{C_{HCi}P_{Bi}}{T_i} \right]$$

where

M_{HC}	= grams HC running loss emissions
V_n	= Net enclosure volume
C_{HCi}, C_{HCf}	= Initial and Final HC Concentration (ppmC)
P_{Bi}, P_{Bf}	= Initial and Final Barometric Pressure (in hg)
T_i, T_f	= Initial and Final Enclosure Temperature (°R)

The end of each preceding sample period is considered the "initial" reading while the end of the period is considered the "final" reading. Initial SHED ambient temperature, pressure and HC levels expressed as parts per million Carbon (ppmC) were subtracted from end of phase HC, pressure and temperature readings to result in net HC mass emissions during the test period. The net HC emissions during the six phases were summed to yield total grams per test. Dynamometer roll revolutions were measured during each phase to permit calculation of distance traveled during the phase. Running loss results are reported in terms of net and cumulative grams per phase, and in grams per mile. Grams per mile values were computed by dividing grams per phase by the distance in that phase, and by dividing cumulative grams by cumulative distance.

Exhaust samples were collected with an Automotive Environmental Systems, Inc. (AESI) six bag Constant Volume Sampler (CVS). Emissions were measured using an ATL fabricated bench and commercial analyzers. CFR specifications applied to the sample handling and analyzer train. Exhaust gas measurements included Total Hydrocarbon (THC), Carbon Monoxide (CO), Carbon Dioxide (CO_2), and Oxides of Nitrogen (NO_x). Fuel economy was calculated using the carbon balance technique specified in the CFR. Because of procedural differences, exhaust emissions measured during a running loss test cannot be treated as true FTP results; but the relationship between exhaust emissions and

---

8 CFR, Title 40, Part 86, Subpart B § 86.143-78 Calculations, evaporative emissions.

canister loading/extended vehicle operation may be of interest to the emission modeler. Results are reported as grams/mile per bag. No weighting for cold start/hot start operation was performed.

F. Running Loss Test Procedures

Results of multiple evaporative tests on a vehicle may be affected by canister loading from previous tests. A canister normalization procedure was developed to minimize this effect by providing a common starting point for each test. Initially, each vehicle received a fuel tank 40% fill with fresh 9.0 psi fuel. An LA-4 preconditioning run was then performed, followed by a one hour hot soak with the vehicle hood down and key off. A second LA-4 test was then performed, again followed by a one hour hot soak. The canister was removed from the vehicle at the end of the second hot soak and weighed. The canister weight at the end of this sequence (the "Normalized Weight") was used as the initial weight for all subsequent tests.

Preconditioning for each test was begun with a drain and 40% refuel with fresh test fuel. At the same time, the vehicle canister was removed and weighed. The canister weight was adjusted by purge with room air or load with butane until it was within 2 grams of the normalized weight previously determined for that vehicle. The canister was reinstalled immediately before a single LA-4 prep, which was followed by an overnight soak at the temperature specified for the upcoming running loss test.

Following overnight soak, the vehicle was pushed into the running loss enclosure for the cold start test. A duct was connected to the vehicle air cleaner inlet to supply combustion air from outside of the enclosure. A separate inlet was provided for the vehicle air pump/pulse air system, if present. Vehicle exhaust was ducted out of the enclosure to a Constant Volume Sampler (CVS). Probes were routed to suspected sources of HC emissions; typically the gas cap, the evaporative charcoal canister, the roll over valve, and the fuel drain. The individual probes were attached to a four way valve controlled remotely by the instrument operator from outside the enclosure. Sample was pumped from the four way valve directly to a Beckman 400 Flame Ionization Detector (FID) analyzer. This was not a "point source" system as no dilution was applied. Mass measurements could not be computed with this system. The probes were used as diagnostic "sniffers" to identify relatively "high" and "low" source(s) of running loss emissions. Mass running loss emissions were computed directly from the HC levels observed in the fixed volume enclosure. Following vehicle hook up, the enclosure was sealed and the temperature was stabilized at the required level for the start of the running loss test.

The running loss test began when the vehicle engine was started, the driving schedule was activated, initial HC levels in the sealed enclosure were recorded, and CVS exhaust emission bag sampling was initiated. The vehicle was operated through the first 505 seconds of the driving schedule, a nominal distance of 3.59 miles (Bag #1). Enclosure HC levels were noted and the exhaust CVS sample was then switched to a second sample collection bag. At the end of 1372 seconds, CVS exhaust bag sampling ended but the vehicle remained at idle. Following 120 ± 30 seconds of idle, enclosure HC levels were recorded (Bag #2). A second repetition of the LA-4 was then begun. A third CVS exhaust emission sample bag (Bag #3) was selected and the vehicle was operated through the first 505 seconds of the second LA-4. Sampling continued with vehicle operation through the end of the second LA-4, and the vehicle again entered a two minute idle period (Bag #4). The test was completed with a third LA-4 (Bag #5 and #6). No idle followed the third repetition. The final running loss HC reading was taken at the 1372 second point of the final LA-4.

NYCC tests were simply six repetitions of the 10 minute driving cycle, each followed by two minutes at idle. The initial reading was taken at the start of each cycle, the final reading at the end of the 2 minute idle period corresponding to the beginning of the next repetition. The sixth cycle did not include the final two minute idle period, but ended simply at the end of the ten minute CVS sample period. A standard LA-4 preconditioning cycle was used for the NYCC running loss tests.

Figure 3 provides an overview of the canister normalization and running loss sequence.

G. Quality Assurance

A rigorous quality assurance system was applied to all procedures used to collect data for this program. All specifications met or exceeded CFR requirements for new vehicle certification. Extensions for the running loss procedures and hardware paralleled those for standard evaporative emissions. Strip charts and raw data collected during each test sequence were collected in packets. The contents of each packet were reduced and independently reviewed to insure data validity. Daily, weekly, and monthly calibrations and verifications were similarly scrutinized. A summary of routine calibration checks is displayed in Table 4.

Figure 3.
Canister Normalization and Running Loss Sequence

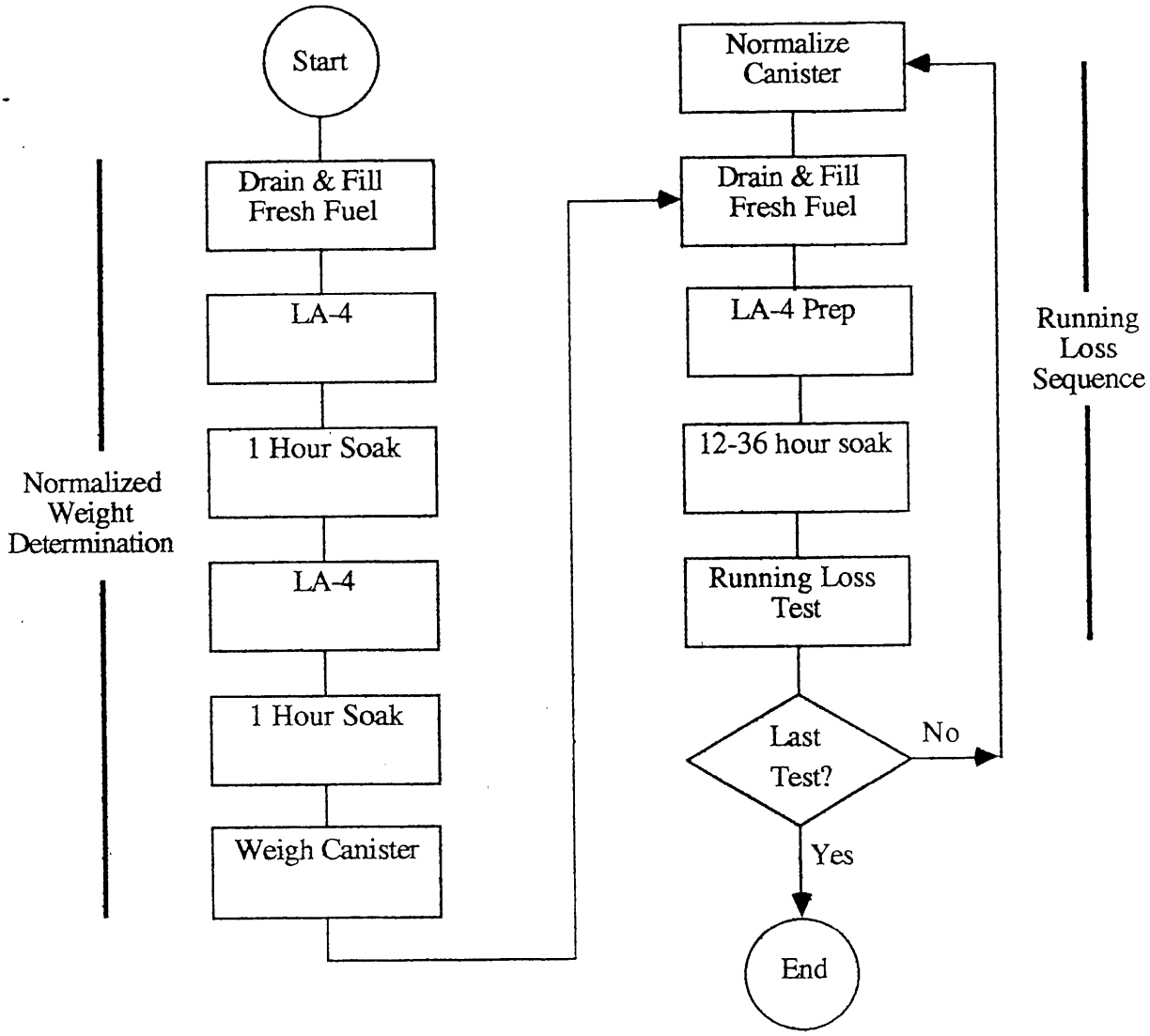

Table 4.
QC Checks

Daily

Item	Procedure	Limits
CVS	Propane Recovery	±2% of injected mass
	Dilution Air	<10 ppm HC & CO
Dilute Bench	Leak Check	Recovery of known gas bag injection ±1 %fs.
	Manifold and Instrument pressures and flows.	Exact
NOx Converter	Converter Efficiency	between 95% and 100%
Data Acquisition System	DVM vs. Computer	max. diff of ±0.5 % fs.
Gas Cylinders	Remaining Pressure	>300 psi remaining
FID	FID Fuel, FID air and sample pressure	exact
	HC Hang up	zero air bag injection <1 ppm
Dynamometer	strobe	46.3 ± 0.5 mph

Weekly

Analyzer Curve Verification	Gas Divider	smaller of ± 1% fs and ± 2% of point.
	Leak Check cylinder	± 1 % fs
	Span cylinder	± 0.5 % fs
Dynamometer	Roll down each weight	smaller of ±1 sec and ± 1 AHP
Temperature Probes	Low and high standard	± 1 °F

Monthly

Propane Retention	Recover known mass of propane	± 4% recover < 5% loss/1 hour.

Initial and As Required by Verifications

CVS Calibration	LFE	40 CFR 86.119-90
Dynamometer	4 point roll down	±1 second/±1 AHP

IV. Results

Specific descriptions of the vehicles tested and the results obtained are presented in this section of the report.

A. Test Vehicle Descriptions

Eighteen vehicles were procured and tested in this program. Table 5, Test Vehicle Descriptions, identifies the particular vehicles procured by vehicle number, model year, make, model, engine size, and fuel delivery system. The test vehicle sample included instances of vehicles from the first level of control technology (canister), the next level (6 g SHED), and the current standard (2 g SHED). The current standard (2 g SHED) vehicles additionally included a representative sample of Carbureted (2V or 4V), Throttle Body Injection (TBI), and Port Fuel Injection (PFI) fuel delivery systems.

Both Federal and California regulators have introduced more stringent testing procedures for evaporative emissions control systems, including regulations for on-board control of refueling emissions, and the ability to control multi-day, extended diurnal, and running loss emissions. Presumably, a fifth and/or sixth technology group will result from the changes required for vehicle manufacturers to bring their future vehicles into compliance with these new regulations.

Table 6 extends the vehicle descriptions with Vehicle Identification Numbers (VIN), exhaust emission engine family numbers, and evaporative emission family identifiers.

B. Detailed Program Result Listings

Detailed listings of individual vehicle test results are contained as appendices to this report.

Appendix A displays the running loss related test results. Each vehicle test is identified with respect to vehicle number (Veh), nominal fuel RVP (Fuel), nominal ambient temperature (°F), test cycle (Cycle) and the date the test was performed (Date). Fuel tank temperature data during the test is displayed next. The actual fuel temperatures and the fuel targets are displayed for each bag of each test. The mass HC increase in each test phase is listed next (RL - grams / Phase). These readings are the net mass increase in the running loss enclosure during the specific phase. They are computed using the diurnal HC density factor specified for conventional diurnal evaporative emissions. These net masses are accumulated through the test, and are reported in the next column (RL - grams/Cum). Net

Table 5.
Test Vehicle Descriptions

Veh No.	Model Year	Make	Model	Engine Size	Fuel Induct
SB-36	83	Ford	F-150	5.8	2V
SB-38	85	Toyota	Pickup	2.4	2V
SB-39	88	Nissan	Pickup	2.4	TBI
SB-40	89	Chevrolet	1500	5.0	TBI
SB-41	85	Ford	Ranger	2.3	PFI
SB-42	84	Mazda	B2000	2.4	2V
SB-43	88	Dodge	Ram 100	3.9	TBI
SB-44	89	Dodge	Ram 250	5.2	TBI
SB-45	84	Toyota	4 Runner	2.4	2V
SB-46	87	Chevrolet	Astro Van	4.3	TBI
SB-47	86	Toyota	Pickup	2.4	2V
SB-48	88	Ford	F-150	5.0	PFI
SB-49	86	Nissan	Pickup	2.4	TBI
SB-50	86	Ford	Aerostar	3.0	PFI
SB-51	89	Toyota	Pickup	2.4	PFI
SB-52	80	Toyota	Pickup	2.2	2V
SB-53	75	Chevrolet	Pickup	5.8	2V
SB-54	78	Chevrolet	C-10	5.8	4V

Table 6.
Test Vehicle Identification Data

Veh No.	Model Year	Make	VIN	Engine Family	Evap Family
SB-36	83	Ford	1FTDF15GODLA81534	DFM5.8T2HBFX	5.8L - 3EQ
SB-38	85	Toyota	JT4RN55D4FOO89338	ETY2.4T2AFFO	EV-R2
SB-39	88	Nissan	1N6ND11S1JC394430	JNS2.4T5FAF1	TB1-1
SB-40	89	Chevrolet	1GCDC14H3KZ132876	K3G5.7T5TYA3	KFO-3C
SB-41	85	Ford	1FTBR10A7FUD41894	FFM2.3T5FAG8	2.3L-5HM
SB-42	84	Mazda	JM2UC1217EO825458	ETK2.OT2AFL7	L
SB-43	88	Dodge	1B7FDO4X4JS742431	JCR3.9T5HGJ7	JCRTD
SB-44	89	Dodge	2B6HB21YXKK333387	KCR5.9T5HGJ2	KCRTE
SB-45	84	Toyota	JT3RN65W7E5O26716	ETY2.4T2EBBO	EV-R2
SB-46	87	Chevrolet	1GBDM15Z6HB12O716	H364.3T5TMGB	7FO-3A
SB-47	86	Toyota	JT4RN50R1GO129413	GTY2.4T2AFF2	EV-R
SB-48	88	Ford	1FTEF14N8JNA92804	JFM5.8T5HZZE	5.0L-8HM
SB-49	86	Nissan	JN6ND11S4GW000202	GNS2.4T5HAF2	TB1-1
SB-50	86	Ford	1FDDA14U3GZA86715	GFM3.0T5FYEX	3.0L-6HM
SB-51	89	Toyota	JT4RN13P6KOOOO546	KTY2.4T5FFF2	EV-E
SB-52	80	Toyota	RN421OOO72	20RTF	EV-RF
SB-53	75	Chevrolet	CCV145F3O8372	GM12123	-
SB-54	78	Chevrolet	CCL148J168932	812J4B	8BFV

grams in a phase divided by actual distance traveled in that phase is reported next (RL - grams/mile/Phase). The table is concluded with cumulative running losses divided by cumulative distance traveled in the test (RL - grams/mile/Cum).

Appendix B lists the CVS bag exhaust emissions measured during each phase of each running loss test. The table begins with a repeat of the test identification data recorded in Appendix A. Next, NO_x, HC, CO_2, and CO emissions are reported on a grams per mile per bag basis. Fuel economy by the carbon balance method concludes the table. No attempt to weight or combine individual bag results into standard Federal Test Procedure (FTP) weighted results has been made. The running loss test protocol does not include the FTP ten minute soak between bag 2 and bag 3. In addition, the procedures used to deliver combustion air into the running loss enclosure to the engine do not follow FTP procedures. The data is valid, however, as a measure of extended driving effects and with respect to changes in running loss evaporative emissions.

Appendix C completes the listing of results with details of the test cell conditions during the test and any comments related to the vehicle condition at the time of the test. The test identification data of Appendix A and B is again listed, followed by a tabulation of the wet and dry bulb temperature observed at the underhood cooling fan inlet (Temps - Dry and Wet bulb per bag). Average barometric pressure during the test follows the temperature listings. The distance traveled during the test, as measured by dynamometer roll revolutions, follows the barometer reading.

C. Temperature/Driving Cycle Effects

Each of the vehicles in this program were tested at the four combinations of two driving cycles (LA-4 and NYCC) and two temperatures (95 and 105 °F). Figure 4 displays the cumulative running losses for the four basic tests on each vehicle. The results are presented in terms of cumulative grams at the end of bag 6. This representation is intended to assist the reader to visualize the differences between vehicles and the differences between tests on a given vehicle. Very large differences between vehicles were noted, as well as differences in response within a vehicle. In general terms, increased running losses were noted with increases in temperature. Differences between driving cycles is less clear cut. On a grams/mile basis the NYCC on a given vehicle always exceeds the LA-4 because of the relatively low distance traveled during an NYCC test.

Figure 4.
Cumulative Running Losses
(Grams HC Per Test)

1981 and Newer TBI Vehicles

SB-39 88 Nissan 2.4L TBI

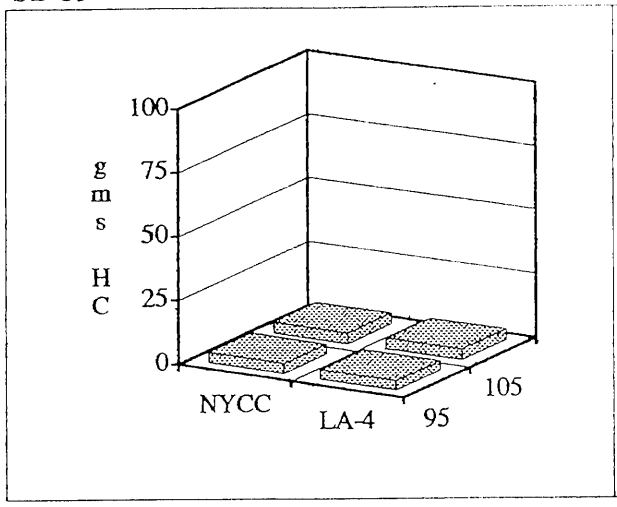

SB-40 89 Chevrolet 5.0L TBI

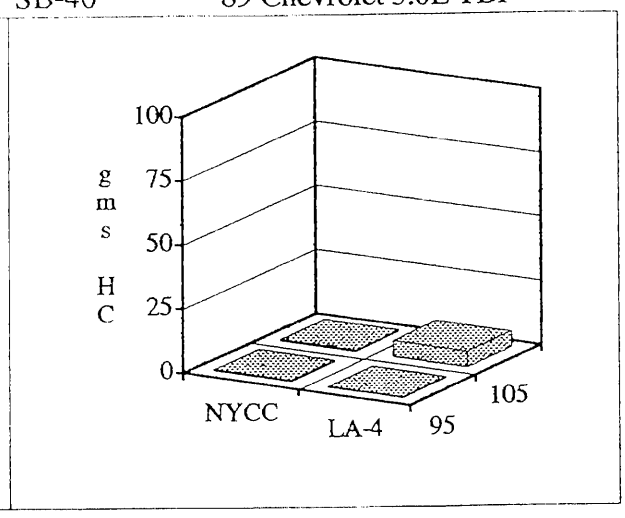

SB-43 88 Dodge Ram 100 3.9L TBI

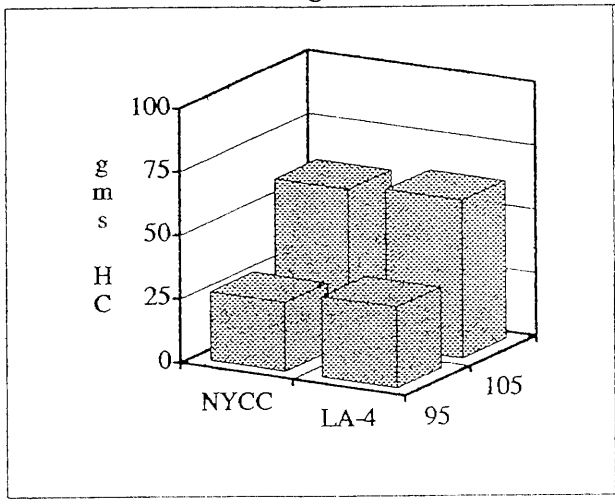

SB-44 89 Dodge Ram 250 5.2L TBI

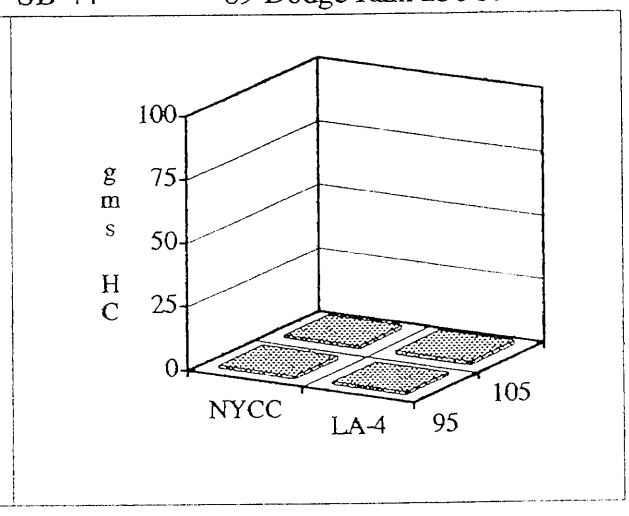

SB-46 87 Chevrolet Astro 4.3L TBI

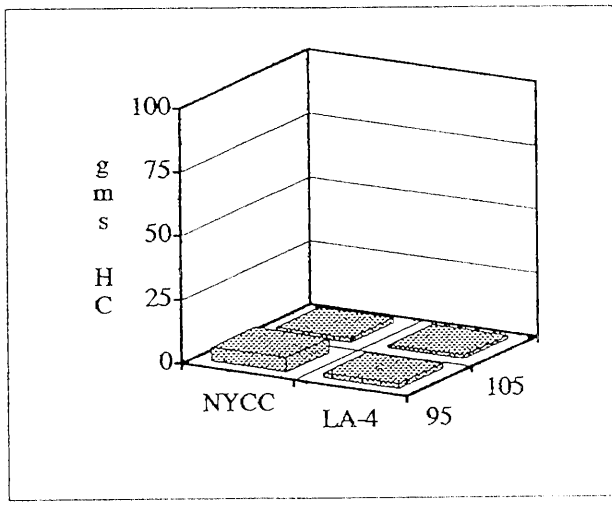

SB-49 86 Nissan 2.4L TBI

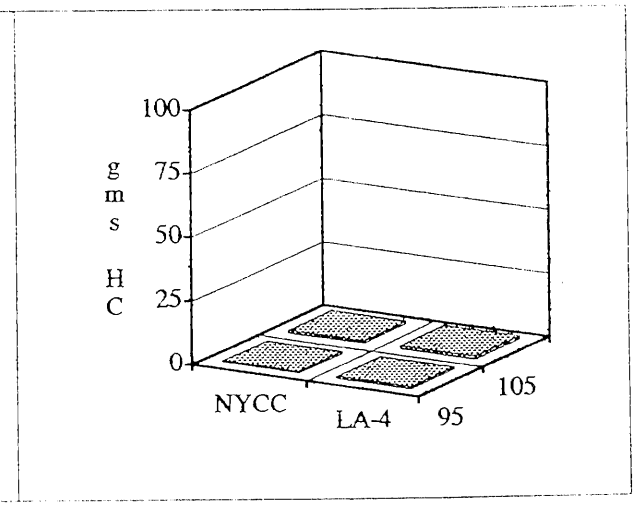

Figure 4.
Cumulative Running Losses
(Grams HC Per Test)

1981 and Newer PFI Vehicles

SB-41 85 Ford Ranger 2.3L PFI

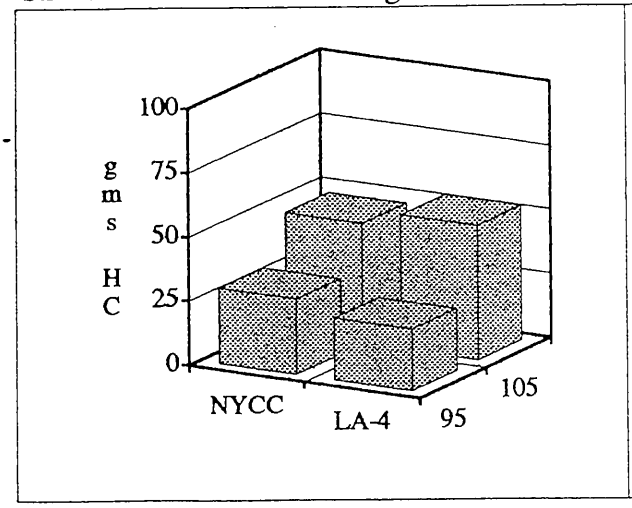

SB-48 88 Ford F150 5.0L PFI

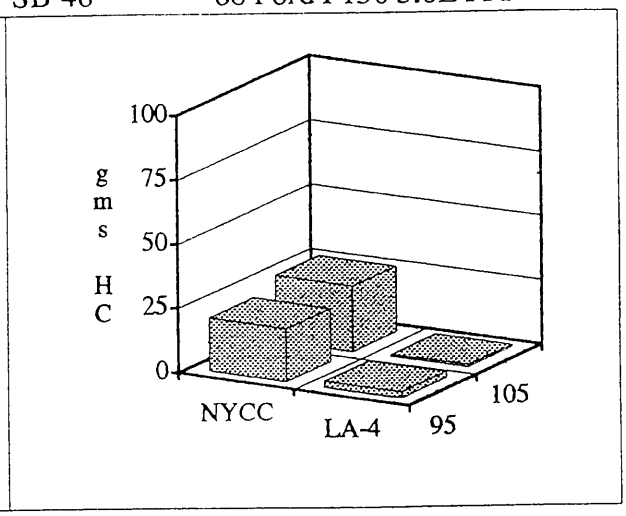

SB-50 86 Ford Aerostar 3.0L PFI

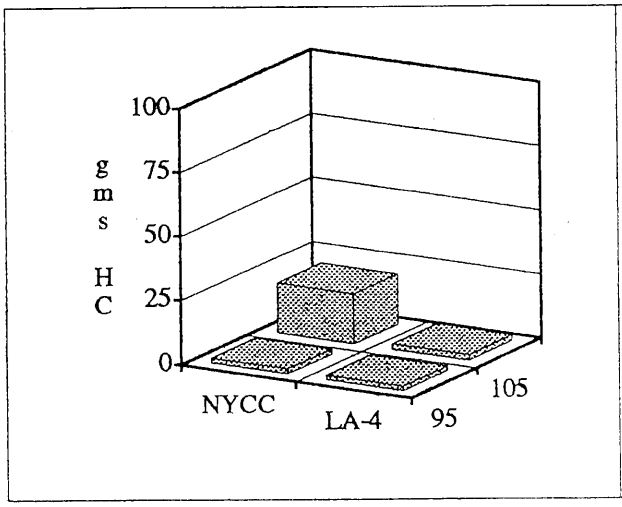

SB-51 89 Toyota PU 2.4L PFI

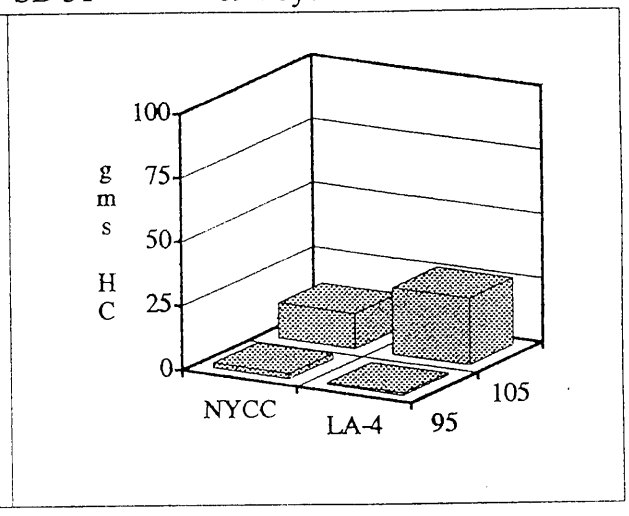

Figure 4.
Cumulative Running Losses
(Grams HC Per Test)

1981 and Newer Carb Vehicles

SB-36 83 Ford F150 5.8L 2V

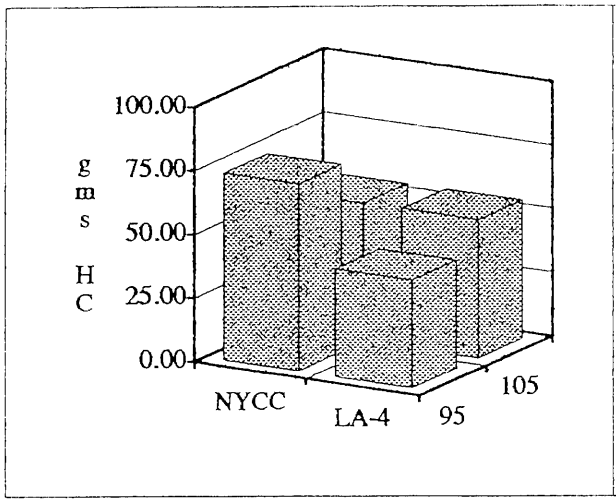

SB-38 85 Toyota 2.4L 2V

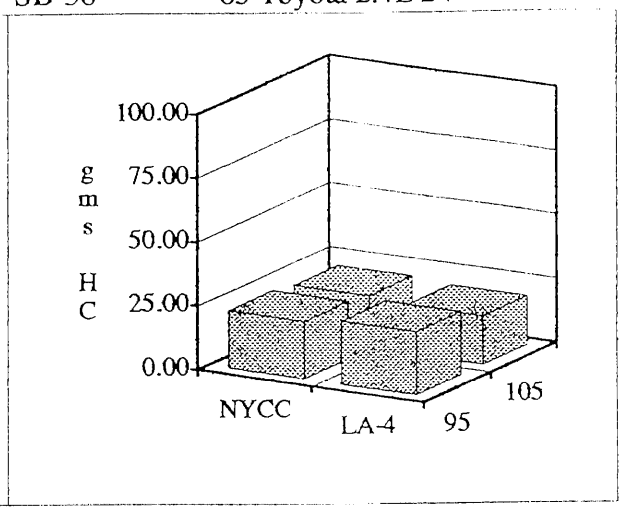

SB-42 84 Mazda B2000 2.4L 2V

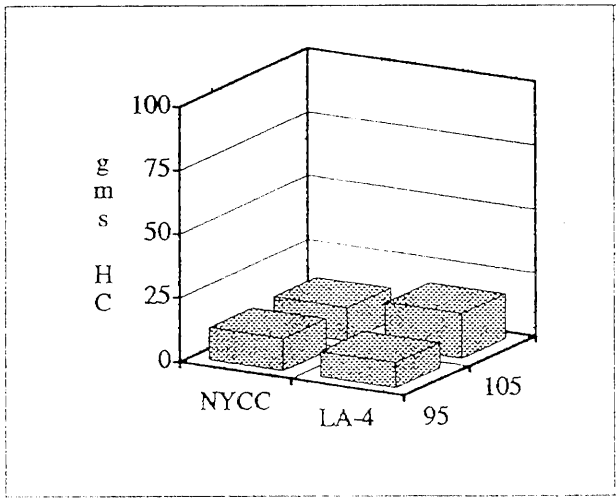

SB-45 84 Toyota 2.4L 2V

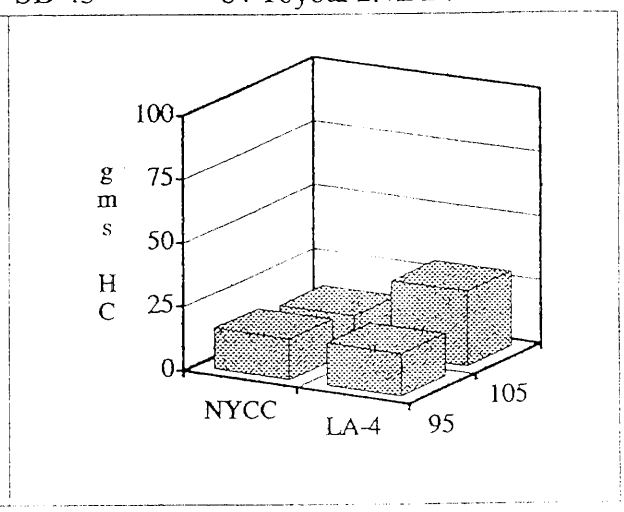

SB-47 86 Toyota 2.4L 2V

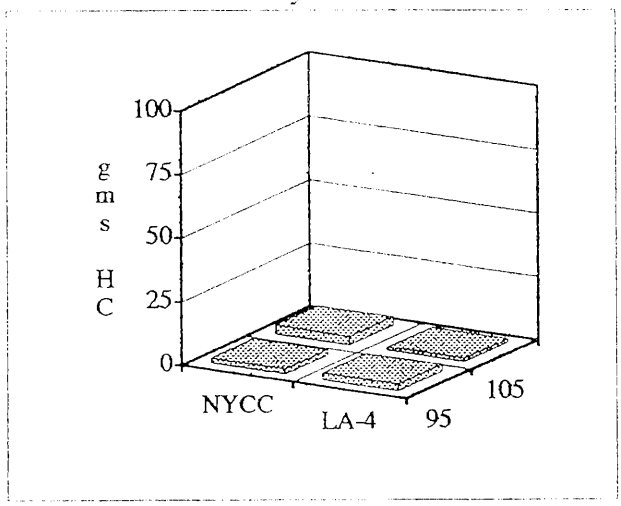

Figure 4.
Cumulative Running Losses
(Grams HC Per Test)

Pre 81 Carbureted Vehicles

SB-52 80 Toyota 2.2L 2V

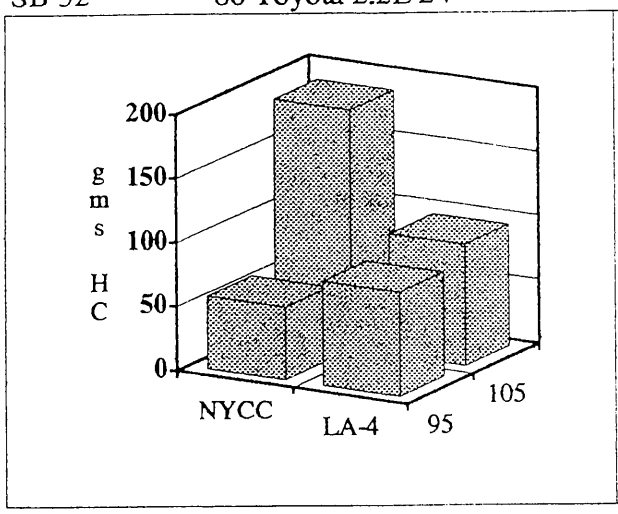

SB-53 75 Chevrolet 5.8L 2V

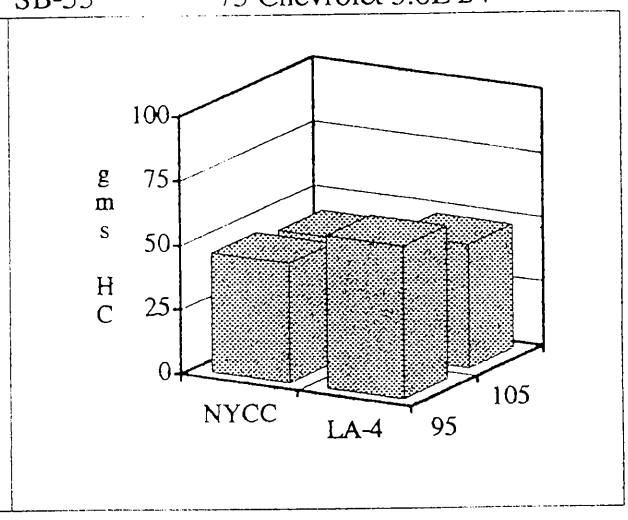

SB-54 78 Chevrolet C10 5.8L 4V

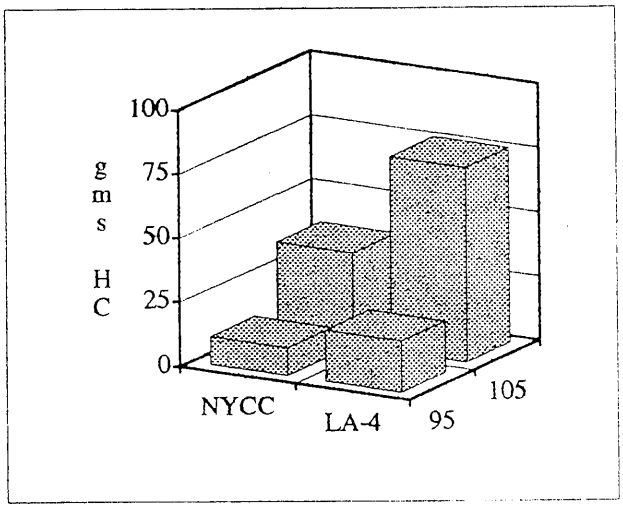

D. Low Temperature Test Results

Low temperature tests were performed on two vehicles using the LA-4 and NYCC driving cycles. The fuel temperature profile targets for these tests were generated under similar low temperature, clear day conditions. Ambient soak and test temperatures of 45 °F were used. Table 7 summarizes the cumulative results of these four tests with the corresponding standard temperature test results.

Table 7.
Low Temperature Test Comparison
(Cum grams HC running losses)

Vehicle	Cycle	45°	95°	105°
SB-48	LA-4	0.80	2.49	0.97
	NYCC	0.61	20.56	25.31
SB-50	LA-4	0.49	1.82	2.27
	NYCC	0.44	1.99	19.51

E. SHED Test Results

Standard SHED tests were performed on the final six vehicles in the program. The diurnal test was performed using standard test procedures during the incoming test. Hot soak loss tests were performed following the initial 95° LA-4 running loss test and following the final 105° NYCC test. The standard SHED hot soak loss test would be performed at a nominal temperature of 75 °F following a standard 3 bag LA-4 test. These hot soak loss tests were performed following a six bag test at elevated temperatures.

The additional driving could have resulted in more canister purge than the standard test, but this effect would have been offset by the much higher fuel temperatures achieved at the end of the running loss tests. Fuel temperatures at the start of a standard FTP/hot soak SHED test are normally in the 95 to 105 °F range. The actual fuel temperatures observed during the running loss testing are listed in Appendix A. They ranged from 113 °F for the lowest 95 °F test to 132 °F for the highest 105 °F test on the six vehicles studied in this portion of the program. The hot soak SHED results, therefore, cannot be directly compared to standard FTP results. Table 8 summarizes the SHED results.

Table 8.

SHED Results
(grams HC per SHED phase)

Vehicle	MY	Diurnal 75°	---- Hot Soak Losses ---- LA-4 95°	NYCC 105°
SB-48	1988	.62	.91	40.94
SB-50	1986	.45	.99	35.60
SB-51	1989	.50	.28	35.46
SB-52	1980	1.73	5.21	57.11
SB-53	1975	2.04	9.72	27.23
SB-54	1978	2.00	15.10	16.61

Appendices

Appendix A
Detailed Running Loss Emission Results

Veh	Fuel	°F	Cycle	Test Date	Bag	Fuel Temp Target	Fuel Temp Actual	RL - grams Phase	RL - grams Cum	RL - grams/mile Phase	RL - grams/mile Cum
SB-36	9.0	95	LA-4	11-01-90	1	98	98	0.66	0.66	0.18	0.18
					2	103	103	3.66	4.31	0.96	0.58
					3	106	106	5.88	10.19	1.64	0.93
					4	110	110	12.84	23.03	3.34	1.55
					5	112	112	9.63	32.66	2.68	1.77
					6	114	114	9.49	42.15	2.48	1.90
SB-36	9.0	95	NYCC	11-05-90	1	99	96	1.01	1.01	0.88	0.88
					2	103	101	5.46	6.47	4.66	2.78
					3	106	106	13.43	19.90	11.46	5.68
					4	109	109	17.48	37.38	14.76	7.98
					5	112	112	17.37	54.75	14.64	9.32
					6	114	114	18.54	73.29	15.63	10.38
SB-36	9.0	105	LA-4	11-06-90	1	108	108	1.58	1.58	0.44	0.44
					2	113	113	5.61	7.19	1.44	0.96
					3	116	116	8.79	15.99	2.44	1.44
					4	120	120	19.22	35.20	4.94	2.35
					5	122	122	9.23	44.43	2.57	2.39
					6	124	124	9.64	54.08	2.49	2.41
SB-36	9.0	105	NYCC	11-07-90	1	109	108	1.52	1.52	1.30	1.30
					2	113	112	4.78	6.29	4.00	2.66
					3	116	115	9.13	15.43	7.63	4.33
					4	119	117	11.71	27.14	9.73	5.70
					5	122	120	12.76	39.90	10.74	6.70
					6	124	122	14.07	53.97	11.82	7.56
SB-38	9.0	95	LA-4	11-16-90	1	98	99	2.77	2.77	0.78	0.78
					2	104	104	5.47	8.24	1.43	1.12
					3	107	107	3.66	11.90	1.02	1.09
					4	111	111	4.94	16.83	1.28	1.14
					5	113	113	3.17	20.00	0.88	1.09
					6	117	117	4.72	24.72	1.22	1.11
SB-38	9.0	95	NYCC	11-19-90	1	99	99	3.72	3.72	3.11	3.11
					2	103	103	4.41	8.13	3.67	3.39
					3	107	107	4.04	12.17	3.34	3.37
					4	109	110	3.30	15.47	2.73	3.21
					5	112	113	3.71	19.18	3.08	3.18
					6	115	115	3.45	22.63	2.87	3.13

Appendix A
Detailed Running Loss Emission Results

Veh	Fuel	°F	Cycle	Test Date	Bag	Fuel Temp Target	Fuel Temp Actual	RL - grams Phase	RL - grams Cum	RL - grams/mile Phase	RL - grams/mile Cum
SB-38	9.0	105	LA-4	11-20-90	1	108	108	2.99	2.99	0.82	0.82
					2	114	114	4.12	7.10	1.06	0.94
					3	117	118	2.60	9.71	0.72	0.87
					4	121	121	3.64	13.35	0.94	0.89
					5	123	123	2.45	15.80	0.68	0.85
					6	127	127	3.43	19.23	0.89	0.85
SB-38	9.0	105	NYCC	11-21-90	1	109	109	3.16	3.16	2.64	2.64
					2	113	113	3.63	6.79	3.01	2.83
					3	117	117	3.81	10.60	3.18	2.94
					4	119	119	3.79	14.39	3.15	2.99
					5	122	122	3.09	17.47	2.59	2.91
					6	125	125	3.19	20.67	2.68	2.88
SB-39	9.0	95	LA-4	11-01-90	1	98	99	0.18	0.18	0.05	0.05
					2	101	102	0.76	0.94	0.20	0.13
					3	103	103	0.59	1.53	0.17	0.14
					4	106	107	0.82	2.35	0.21	0.16
					5	107	107	0.58	2.93	0.16	0.16
					6	109	109	0.79	3.73	0.21	0.17
SB-39	9.0	95	NYCC	11-02-90	1	99	99	0.48	0.48	0.40	0.40
					2	101	103	0.69	1.17	0.59	0.50
					3	103	105	0.71	1.88	0.60	0.53
					4	106	107	0.69	2.57	0.59	0.55
					5	107	107	0.64	3.20	0.54	0.54
					6	108	107	0.69	3.89	0.59	0.55
SB-39	9.0	105	LA-4	10-31-90	1	108	108	0.62	0.62	0.17	0.17
					2	111	113	0.88	1.50	0.23	0.20
					3	113	114	0.60	2.10	0.17	0.19
					4	116	116	0.81	2.91	0.21	0.19
					5	117	117	0.53	3.44	0.15	0.19
					6	118	119	0.81	4.25	0.21	0.19
SB-39	9.0	105	NYCC	11-07-90	1	109	109	0.57	0.57	0.48	0.48
					2	111	112	0.71	1.28	0.59	0.54
					3	113	114	0.70	1.98	0.58	0.55
					4	116	116	0.71	2.69	0.59	0.56
					5	117	117	0.73	3.42	0.61	0.57
					6	118	118	0.76	4.17	0.64	0.58

Appendix A
Detailed Running Loss Emission Results

Veh	Fuel	°F	Cycle	Test Date	Bag	Fuel Temp Target	Fuel Temp Actual	RL - grams Phase	RL - grams Cum	RL - grams/mile Phase	RL - grams/mile Cum
SB-40	9.0	95	LA-4	11-07-90	1	96	97	0.08	0.08	0.02	0.02
					2	99	100	0.08	0.16	0.02	0.02
					3	101	101	0.08	0.24	0.02	0.02
					4	104	104	0.11	0.35	0.03	0.02
					5	105	106	0.08	0.42	0.02	0.02
					6	108	108	0.08	0.50	0.02	0.02
SB-40	9.0	95	NYCC	11-08-90	1	96	96	0.11	0.11	0.09	0.09
					2	98	98	0.16	0.27	0.14	0.11
					3	101	100	0.13	0.40	0.11	0.11
					4	103	103	0.11	0.51	0.09	0.11
					5	105	105	0.13	0.64	0.11	0.11
					6	107	107	0.13	0.77	0.11	0.11
SB-40	9.0	105	LA-4	11-09-90	1	106	106	0.10	0.10	0.03	0.03
					2	109	109	0.47	0.57	0.12	0.08
					3	111	112	0.70	1.27	0.19	0.11
					4	114	116	2.22	3.49	0.57	0.23
					5	116	118	2.12	5.61	0.59	0.30
					6	118	119	0.71	6.32	0.18	0.28
SB-40	9.0	105	NYCC	11-12-90	1	106	106	0.13	0.13	0.11	0.11
					2	108	108	0.10	0.23	0.08	0.10
					3	111	111	0.13	0.37	0.11	0.10
					4	113	113	0.10	0.47	0.09	0.10
					5	115	116	0.13	0.60	0.11	0.10
					6	117	118	0.10	0.71	0.09	0.10
SB-41	9.0	95	LA-4	11-09-90	1	102	101	3.74	3.74	1.04	1.04
					2	108	108	1.67	5.41	0.43	0.72
					3	113	112	3.54	8.94	0.98	0.81
					4	116	116	5.78	14.73	1.49	0.98
					5	118	118	6.38	21.11	1.77	1.14
					6	119	119	2.92	24.03	0.75	1.07
SB-41	9.0	95	NYCC	11-12-90	1	102	101	1.34	1.34	1.12	1.12
					2	108	108	4.08	5.43	3.41	2.26
					3	113	113	5.73	11.16	4.80	3.11
					4	116	116	6.09	17.25	4.99	3.58
					5	118	118	6.10	23.34	5.08	3.88
					6	119	119	6.02	29.36	5.00	4.07

Appendix A
Detailed Running Loss Emission Results

Veh	Fuel	°F	Cycle	Test Date	Bag	Fuel Temp Target	Fuel Temp Actual	RL - grams Phase	RL - grams Cum	RL - grams/mile Phase	RL - grams/mile Cum
SB-41	9.0	105	LA-4	11-13-90	1	111	109	1.47	1.47	0.41	0.41
					2	120	119	9.12	10.59	2.35	1.42
					3	124	123	9.38	19.97	2.61	1.80
					4	128	128	13.44	33.42	3.45	2.23
					5	128	128	10.02	43.43	2.78	2.34
					6	130	130	8.96	52.40	2.30	2.33
SB-41	9.0	105	NYCC	11-14-90	1	112	111	1.08	1.08	0.92	0.92
					2	118	118	5.12	6.20	4.35	2.63
					3	123	123	9.51	15.71	8.01	4.43
					4	126	126	8.81	24.52	7.50	5.20
					5	128	128	10.30	34.82	8.80	5.91
					6	129	130	12.13	46.95	10.22	6.63
SB-42	9.0	95	LA-4	11-06-90	1	100	99	0.16	0.16	0.04	0.04
					2	105	103	0.82	0.98	0.21	0.13
					3	110	106	1.30	2.29	0.36	0.21
					4	114	110	2.10	4.39	0.54	0.29
					5	118	113	2.29	6.68	0.64	0.36
					6	120	117	3.27	9.95	0.84	0.44
SB-42	9.0	95	NYCC	11-14-90	1	100	100	0.43	0.43	0.37	0.37
					2	105	105	1.49	1.92	1.26	0.82
					3	111	110	2.32	4.24	1.95	1.20
					4	114	114	2.85	7.09	2.43	1.51
					5	117	117	2.74	9.83	2.52	1.70
					6	120	120	2.81	12.64	2.42	1.82
SB-42	9.0	105	LA-4	11-09-90	1	110	109	0.57	0.57	0.16	0.16
					2	115	115	3.29	3.87	0.83	0.51
					3	121	120	2.56	6.42	0.70	0.57
					4	124	124	4.25	10.67	1.08	0.70
					5	128	128	2.87	13.54	0.80	0.72
					6	130	130	3.99	17.53	1.03	0.77
SB-42	9.0	105	NYCC	11-12-90	1	110	110	0.39	0.39	0.33	0.33
					2	115	113	1.63	2.02	1.38	0.86
					3	121	118	2.65	4.67	2.22	1.31
					4	124	122	2.91	7.58	2.45	1.60
					5	127	125	2.62	10.21	2.21	1.72
					6	130	128	2.91	13.12	2.45	1.84

Appendix A
Detailed Running Loss Emission Results

Veh	Fuel	°F	Cycle	Test Date	Bag	Fuel Temp Target	Fuel Temp Actual	RL - grams Phase	RL - grams Cum	RL - grams/mile Phase	RL - grams/mile Cum
SB-43	9.0	95	LA-4	11-08-90	1	96	97	0.93	0.93	0.26	0.26
					2	103	103	5.60	6.54	1.45	0.88
					3	107	107	5.77	12.31	1.61	1.11
					4	112	112	7.13	19.44	1.85	1.30
					5	115	115	4.86	24.30	1.33	1.31
					6	118	118	7.53	31.84	1.93	1.42
SB-43	9.0	95	NYCC	11-09-90	1	97	97	1.45	1.45	1.22	1.22
					2	102	102	4.21	5.66	3.56	2.38
					3	106	106	5.71	11.37	4.79	3.19
					4	110	109	4.88	16.25	4.13	3.42
					5	114	114	5.14	21.39	4.30	3.60
					6	116	116	5.80	27.19	4.92	3.82
SB-43	9.0	105	LA-4	11-12-90	1	106	106	3.19	3.19	0.88	0.88
					2	113	114	11.69	14.88	2.99	1.98
					3	117	119	13.18	28.06	3.66	2.52
					4	122	122	9.24	37.31	2.37	2.48
					5	125	126	8.05	45.35	2.23	2.43
					6	128	128	16.81	62.16	4.31	2.76
SB-43	9.0	105	NYCC	11-14-90	1	107	107	1.18	1.18	1.01	1.01
					2	112	113	7.87	9.05	6.80	3.89
					3	116	116	11.43	20.48	9.69	5.84
					4	120	120	12.20	32.68	10.41	6.98
					5	124	124	12.03	44.71	10.06	7.61
					6	126	127	15.25	59.96	13.00	8.51
SB-44	9.0	95	LA-4	11-13-90	1	99	99	0.19	0.19	0.05	0.05
					2	104	105	0.27	0.46	0.07	0.06
					3	108	109	0.19	0.64	0.05	0.06
					4	114	114	0.24	0.88	0.06	0.06
					5	116	117	0.10	0.99	0.03	0.05
					6	119	119	0.21	1.20	0.06	0.05
SB-44	9.0	95	NYCC	11-09-90	1	100	100	0.21	0.21	0.18	0.18
					2	103	103	0.26	0.47	0.22	0.20
					3	107	107	0.26	0.73	0.22	0.20
					4	112	111	0.19	0.92	0.16	0.19
					5	115	115	0.29	1.21	0.24	0.20
					6	117	117	0.22	1.43	0.19	0.20

Appendix A
Detailed Running Loss Emission Results

Veh	Fuel	°F	Cycle	Test Date	Bag	Fuel Temp Target	Fuel Temp Actual	RL - grams Phase	RL - grams Cum	RL - grams/mile Phase	RL - grams/mile Cum
SB-44	9.0	105	LA-4	11-12-90	1	109	108	0.16	0.16	0.05	0.05
					2	114	114	0.29	0.45	0.08	0.06
					3	118	118	0.29	0.74	0.08	0.07
					4	124	124	0.29	1.03	0.08	0.07
					5	126	127	0.18	1.21	0.05	0.07
					6	129	131	0.34	1.55	0.09	0.07
SB-44	9.0	105	NYCC	11-14-90	1	110	109	0.26	0.26	0.22	0.22
					2	113	113	0.18	0.45	0.15	0.19
					3	117	117	0.21	0.66	0.18	0.18
					4	122	122	0.24	0.89	0.20	0.19
					5	125	126	0.21	1.10	0.18	0.19
					6	127	129	0.28	1.38	0.24	0.20
SB-45	9.0	95	LA-4	11-09-90	1	97	98	0.50	0.50	0.14	0.14
					2	102	103	2.48	2.98	0.63	0.39
					3	105	105	2.77	5.75	0.76	0.51
					4	110	110	3.75	9.50	0.95	0.63
					5	111	111	3.22	12.72	0.89	0.68
					6	114	114	3.85	16.57	0.98	0.73
SB-45	9.0	95	NYCC	11-12-90	1	98	97	0.70	0.70	0.59	0.59
					2	101	101	3.12	3.82	2.60	1.60
					3	105	105	3.13	6.95	2.61	1.93
					4	108	108	3.12	10.07	2.59	2.10
					5	111	111	3.14	13.21	2.61	2.20
					6	112	113	2.70	15.91	2.25	2.21
SB-45	9.0	105	LA-4	11-13-90	1	107	107	0.55	0.55	0.15	0.15
					2	112	112	5.74	6.28	1.47	0.84
					3	115	115	4.82	11.10	1.34	1.00
					4	120	119	6.27	17.38	1.62	1.16
					5	121	121	5.32	22.70	1.48	1.22
					6	124	124	6.63	29.33	1.71	1.31
SB-45	9.0	105	NYCC	11-14-90	1	108	108	0.53	0.53	0.45	0.45
					2	111	111	1.52	2.04	1.28	0.87
					3	115	114	2.34	4.38	1.98	1.24
					4	118	118	2.91	7.30	2.49	1.55
					5	121	120	3.09	10.39	2.65	1.77
					6	122	122	2.97	13.36	2.58	1.90

Appendix A
Detailed Running Loss Emission Results

Veh	Fuel	°F	Cycle	Test Date	Bag	Fuel Temp Target	Fuel Temp Actual	RL - grams Phase	RL - grams Cum	RL - grams/mile Phase	RL - grams/mile Cum
SB-46	9.0	95	LA-4	10-31-90	1	97	96	0.21	0.21	0.06	0.06
					2	105	101	0.29	0.50	0.07	0.07
					3	109	105	0.24	0.74	0.07	0.07
					4	115	113	0.48	1.22	0.12	0.08
					5	118	118	0.24	1.45	0.07	0.08
					6	122	122	0.63	2.09	0.16	0.09
SB-46	9.0	95	NYCC	11-01-90	1	97	96	0.16	0.16	0.14	0.14
					2	104	100	0.45	0.61	0.39	0.26
					3	108	105	1.01	1.62	0.86	0.46
					4	113	109	1.40	3.02	1.21	0.65
					5	117	113	1.32	4.34	1.13	0.75
					6	121	115	1.46	5.80	1.34	0.84
SB-46	9.0	105	LA-4	11-02-90	1	107	107	0.21	0.21	0.06	0.06
					2	115	113	0.26	0.46	0.07	0.06
					3	119	116	0.21	0.67	0.06	0.06
					4	125	122	0.28	0.96	0.07	0.06
					5	128	125	0.18	1.14	0.05	0.06
					6	132	130	0.26	1.39	0.07	0.06
SB-46	9.0	105	NYCC	11-07-90	1	107	108	0.21	0.21	0.17	0.17
					2	114	111	0.24	0.44	0.20	0.18
					3	118	115	0.31	0.76	0.26	0.21
					4	123	120	0.39	1.15	0.33	0.24
					5	127	124	0.42	1.57	0.35	0.26
					6	131	129	0.29	1.85	0.24	0.26
SB-47	9.0	95	LA-4	11-19-90	1	98	98	0.34	0.34	0.09	0.09
					2	104	104	0.64	0.98	0.16	0.13
					3	107	108	0.40	1.37	0.11	0.12
					4	111	111	0.53	1.90	0.14	0.13
					5	113	113	0.35	2.25	0.10	0.12
					6	117	117	0.45	2.71	0.12	0.12
SB-47	9.0	95	NYCC	11-20-90	1	99	99	0.48	0.48	0.41	0.41
					2	103	103	0.37	0.85	0.32	0.36
					3	107	107	0.40	1.25	0.34	0.35
					4	109	109	0.29	1.54	0.25	0.33
					5	112	111	0.32	1.86	0.27	0.32
					6	115	113	0.29	2.15	0.25	0.30

Appendix A
Detailed Running Loss Emission Results

Veh	Fuel	°F	Cycle	Test Date	Bag	Fuel Temp Target	Fuel Temp Actual	RL - grams Phase	RL - grams Cum	RL - grams/mile Phase	RL - grams/mile Cum
SB-47	9.0	105	LA-4	11-21-90	1	108	107	0.39	0.39	0.11	0.11
					2	114	114	0.39	0.77	0.10	0.10
					3	117	117	0.26	1.03	0.07	0.09
					4	121	120	0.13	1.16	0.03	0.08
					5	123	122	0.13	1.29	0.04	0.07
					6	127	125	0.10	1.40	0.03	0.06
SB-47	9.0	105	NYCC	11-23-90	1	109	109	0.64	0.64	0.53	0.53
					2	113	113	0.57	1.21	0.47	0.50
					3	117	117	0.52	1.72	0.43	0.48
					4	119	119	0.57	2.29	0.47	0.48
					5	122	122	0.46	2.76	0.39	0.46
					6	125	125	0.59	3.34	0.49	0.46
SB-48	9.0	45	LA-4	03-23-91	1	49	48	0.12	0.12	0.03	0.03
					2	57	58	0.20	0.32	0.05	0.04
					3	60	65	0.11	0.43	0.03	0.04
					4	66	72	0.11	0.54	0.03	0.04
					5	68	77	0.12	0.66	0.03	0.04
					6	72	82	0.14	0.80	0.04	0.04
SB-48	9.0	45	NYCC	03-29-91	1	52	52	0.12	0.12	0.10	0.10
					2	57	58	0.12	0.23	0.10	0.10
					3	62	63	0.12	0.35	0.10	0.10
					4	66	67	0.09	0.44	0.07	0.09
					5	69	70	0.09	0.52	0.07	0.09
					6	71	72	0.09	0.61	0.07	0.09
SB-48	9.0	95	LA-4	07-18-91	1	98	98	0.29	0.29	0.08	0.08
					2	106	106	0.48	0.77	0.12	0.10
					3	111	111	0.37	1.14	0.10	0.10
					4	117	118	0.50	1.64	0.13	0.11
					5	119	120	0.37	2.01	0.10	0.11
					6	123	123	0.48	2.49	0.12	0.11
SB-48	9.0	95	NYCC	07-23-91	1	99	99	3.58	3.58	3.07	3.07
					2	104	104	3.86	7.44	3.32	3.19
					3	110	110	3.75	11.19	3.22	3.20
					4	115	114	3.18	14.37	2.72	3.08
					5	118	118	3.14	17.51	2.68	3.00
					6	121	120	3.05	20.56	2.60	2.93

Appendix A
Detailed Running Loss Emission Results

Veh	Fuel	°F	Cycle	Test Date	Bag	Fuel Temp Target	Fuel Temp Actual	RL - grams Phase	RL - grams Cum	RL - grams/mile Phase	RL - grams/mile Cum
SB-48	9.0	105	LA-4	07-29-91	1	108	109	0.09	0.09	0.03	0.03
					2	116	117	0.10	0.19	0.03	0.03
					3	121	122	0.13	0.32	0.04	0.03
					4	127	128	0.25	0.58	0.07	0.04
					5	129	129	0.17	0.75	0.05	0.04
					6	133	133	0.23	0.97	0.06	0.04
SB-48	9.0	105	NYCC	07-31-91	1	109	109	0.42	0.42	0.35	0.35
					2	114	116	0.52	0.94	0.45	0.40
					3	120	120	0.60	1.54	0.51	0.44
					4	125	125	0.76	2.30	0.64	0.49
					5	128	128	6.80	9.10	5.73	1.54
					6	131	132	16.21	25.31	13.92	3.58
SB-49	9.0	95	LA-4	11-19-90	1	98	99	0.22	0.22	0.06	0.06
					2	101	104	0.26	0.48	0.07	0.06
					3	103	108	0.16	0.63	0.04	0.06
					4	106	109	0.16	0.79	0.04	0.05
					5	107	110	0.11	0.90	0.03	0.05
					6	108	111	0.08	0.98	0.02	0.04
SB-49	9.0	95	NYCC	11-21-90	1	98	100	0.16	0.16	0.14	0.14
					2	100	105	0.21	0.38	0.18	0.16
					3	103	108	0.11	0.48	0.09	0.13
					4	105	110	0.19	0.67	0.16	0.14
					5	107	112	0.08	0.75	0.07	0.13
					6	107	112	0.08	0.83	0.07	0.12
SB-49	9.0	105	LA-4	11-23-90	1	108	109	0.15	0.15	0.04	0.04
					2	111	113	0.30	0.45	0.08	0.06
					3	113	115	0.21	0.66	0.06	0.06
					4	116	117	0.20	0.87	0.05	0.06
					5	117	118	0.15	1.02	0.04	0.05
					6	118	118	0.28	1.30	0.07	0.06
SB-49	9.0	105	NYCC	11-26-90	1	108	109	0.18	0.18	0.15	0.15
					2	110	112	0.21	0.38	0.17	0.16
					3	113	114	0.16	0.54	0.13	0.15
					4	115	115	0.20	0.74	0.17	0.15
					5	117	117	0.16	0.90	0.13	0.15
					6	117	117	0.11	1.01	0.09	0.14

Appendix A
Detailed Running Loss Emission Results

Veh	Fuel	°F	Cycle	Test Date	Bag	Fuel Temp Target	Fuel Temp Actual	RL - grams Phase	RL - grams Cum	RL - grams/mile Phase	RL - grams/mile Cum
SB-50	9.0	45	LA-4	03-23-91	1	51	49	0.05	0.05	0.02	0.02
					2	59	56	0.12	0.17	0.03	0.02
					3	62	62	0.06	0.23	0.02	0.02
					4	68	69	0.11	0.34	0.03	0.02
					5	70	71	0.09	0.43	0.02	0.02
					6	73	75	0.06	0.49	0.01	0.02
SB-50	9.0	45	NYCC	03-29-91	1	50	49	0.03	0.03	0.02	0.02
					2	55	56	0.09	0.12	0.07	0.05
					3	60	61	0.09	0.20	0.07	0.06
					4	64	64	0.09	0.29	0.07	0.06
					5	67	66	0.09	0.38	0.07	0.06
					6	70	68	0.06	0.44	0.05	0.06
SB-50	9.0	95	LA-4	07-08-91	1	98	97	0.21	0.21	0.06	0.06
					2	106	106	0.37	0.58	0.10	0.08
					3	111	111	0.24	0.82	0.07	0.07
					4	117	117	0.34	1.16	0.09	0.08
					5	120	120	0.27	1.43	0.07	0.08
					6	124	125	0.40	1.82	0.10	0.08
SB-50	9.0	95	NYCC	07-11-91	1	98	98	0.35	0.35	0.30	0.30
					2	104	103	0.26	0.61	0.23	0.26
					3	110	108	0.29	0.90	0.25	0.26
					4	115	116	0.40	1.30	0.35	0.28
					5	119	120	0.40	1.69	0.34	0.29
					6	122	121	0.29	1.99	0.25	0.29
SB-50	9.0	105	LA-4	07-15-91	1	107	107	0.36	0.36	0.10	0.10
					2	116	115	0.44	0.81	0.12	0.11
					3	121	121	0.31	1.12	0.09	0.10
					4	127	127	0.45	1.56	0.12	0.11
					5	130	130	0.29	1.85	0.08	0.10
					6	135	134	0.42	2.27	0.11	0.10
SB-50	9.0	105	NYCC	07-17-91	1	108	110	0.67	0.67	0.56	0.56
					2	114	114	0.63	1.29	0.54	0.55
					3	120	120	0.60	1.90	0.51	0.54
					4	125	124	0.75	2.65	0.64	0.56
					5	129	129	5.48	8.13	4.70	1.38
					6	132	132	11.39	19.51	9.71	2.77

Appendix A
Detailed Running Loss Emission Results

Veh	Fuel	°F	Cycle	Test Date	Bag	Fuel Temp Target	Fuel Temp Actual	RL - grams Phase	RL - grams Cum	RL - grams/mile Phase	RL - grams/mile Cum
SB-51	9.0	95	LA-4	07-15-91	1	99	99	0.08	0.08	0.02	0.02
					2	107	107	0.24	0.32	0.06	0.04
					3	111	111	0.11	0.43	0.03	0.04
					4	117	117	0.16	0.59	0.04	0.04
					5	119	119	0.11	0.70	0.03	0.04
					6	123	123	0.16	0.86	0.04	0.04
SB-51	9.0	95	NYCC	07-18-91	1	100	101	0.45	0.45	0.38	0.38
					2	105	105	0.34	0.79	0.29	0.34
					3	110	110	0.37	1.16	0.31	0.33
					4	115	115	0.29	1.45	0.25	0.31
					5	118	118	0.37	1.82	0.31	0.31
					6	121	121	0.26	2.08	0.22	0.30
SB-51	9.0	105	LA-4	07-24-91	1	109	108	0.34	0.34	0.09	0.09
					2	117	117	0.62	0.96	0.16	0.13
					3	121	122	0.60	1.56	0.17	0.14
					4	127	126	6.41	7.97	1.67	0.54
					5	129	128	8.67	16.64	2.42	0.90
					6	133	131	9.35	25.99	2.42	1.16
SB-51	9.0	105	NYCC	07-25-91	1	110	110	0.53	0.53	0.44	0.44
					2	115	115	0.59	1.12	0.50	0.47
					3	120	120	0.60	1.72	0.50	0.48
					4	125	126	0.63	2.35	0.53	0.49
					5	128	129	1.91	4.26	1.60	0.72
					6	131	131	9.39	13.65	7.88	1.91
SB-52	9.0	95	LA-4	07-29-91	1	99	98	7.26	7.26	2.05	2.05
					2	106	106	13.72	20.99	3.59	2.85
					3	110	110	11.21	32.19	3.13	2.94
					4	115	115	17.29	49.48	4.48	3.34
					5	117	117	13.82	63.30	3.87	3.44
					6	119	119	17.78	81.08	4.62	3.65
SB-52	9.0	95	NYCC	07-30-91	1	100	100	4.79	4.79	3.76	3.76
					2	105	105	7.78	12.58	6.80	5.20
					3	109	109	8.65	21.23	7.49	5.94
					4	113	113	13.68	34.90	11.85	7.38
					5	116	116	8.78	43.69	7.62	7.43
					6	118	119	12.98	56.67	11.22	8.05

Appendix A
Detailed Running Loss Emission Results

Veh	Fuel	°F	Cycle	Test Date	Bag	Fuel Temp Target	Fuel Temp Actual	RL - grams Phase	RL - grams Cum	RL - grams/mile Phase	RL - grams/mile Cum
SB-52	9.0	105	LA-4	07-31-91	1	109	106	9.25	9.25	2.59	2.59
					2	116	116	17.93	27.18	4.68	3.67
					3	120	121	14.79	41.98	4.13	3.82
					4	125	126	16.39	58.37	4.26	3.93
					5	127	127	14.01	72.38	3.91	3.93
					6	129	129	22.24	94.62	5.84	4.26
SB-52	9.0	105	NYCC	08-12-91	1	110	110	8.56	8.56	7.16	7.16
					2	115	116	24.79	33.34	20.99	14.03
					3	119	120	32.42	65.77	27.36	18.47
					4	123	124	36.49	102.25	31.13	21.60
					5	126	127	46.16	148.42	38.76	25.05
					6	128	130	38.70	187.12	32.55	26.31
SB-53	9.0	95	LA-4	07-25-91	1	97	97	6.26	6.26	1.74	1.74
					2	101	101	16.34	22.60	4.21	3.02
					3	104	104	9.02	31.62	2.51	2.86
					4	107	107	9.73	41.35	2.51	2.77
					5	110	109	8.35	49.70	2.33	2.68
					6	113	113	9.57	59.28	2.48	2.65
SB-53	9.0	95	NYCC	07-30-91	1	97	96	10.10	10.10	8.53	8.53
					2	100	100	12.11	22.21	10.23	9.38
					3	104	103	6.45	28.66	5.55	8.12
					4	106	106	5.89	34.55	5.04	7.36
					5	109	109	6.08	40.62	5.17	6.92
					6	111	111	5.82	46.44	4.95	6.59
SB-53	9.0	105	LA-4	07-31-91	1	107	105	9.99	9.99	2.78	2.78
					2	111	110	10.11	20.10	2.61	2.69
					3	114	113	6.73	26.84	1.88	2.43
					4	117	117	7.36	34.20	1.90	2.29
					5	120	119	6.56	40.75	1.82	2.20
					6	123	121	7.40	48.15	1.92	2.15
SB-53	9.0	105	NYCC	08-01-91	1	107	107	10.79	10.79	9.09	9.09
					2	110	110	8.91	19.70	7.46	8.28
					3	114	113	4.79	24.50	4.07	6.88
					4	116	116	5.84	30.34	4.89	6.38
					5	119	119	5.78	36.12	4.86	6.08
					6	121	122	7.21	43.33	6.08	6.08

Appendix A
Detailed Running Loss Emission Results

Veh	Fuel	°F	Cycle	Test Date	Bag	Fuel Temp Target	Fuel Temp Actual	RL - grams Phase	RL - grams Cum	RL - grams/mile Phase	RL - grams/mile Cum
SB-54	9.0	95	LA-4	08-22-91	1	97	98	0.80	0.80	0.22	0.22
					2	101	102	1.67	2.46	0.43	0.33
					3	104	104	1.70	4.16	0.47	0.38
					4	107	108	1.35	5.52	0.35	0.37
					5	110	111	3.09	8.61	0.86	0.47
					6	113	113	11.44	20.04	2.97	0.90
SB-54	9.0	95	NYCC	08-23-91	1	97	97	1.02	1.02	0.86	0.86
					2	100	101	1.78	2.80	1.51	1.18
					3	104	105	1.82	4.62	1.52	1.30
					4	106	107	1.95	6.57	1.64	1.39
					5	109	111	1.85	8.42	1.55	1.42
					6	111	112	2.51	10.93	2.10	1.53
SB-54	9.0	105	LA-4	08-26-91	1	107	109	1.21	1.21	0.34	0.34
					2	111	113	2.62	3.82	0.68	0.51
					3	114	115	1.85	5.67	0.52	0.51
					4	117	117	11.81	17.49	3.05	1.17
					5	120	121	19.34	36.82	5.37	1.99
					6	123	124	39.04	75.87	10.09	3.39
SB-54	9.0	105	NYCC	08-27-91	1	107	107	1.52	1.52	1.29	1.29
					2	110	111	2.58	4.10	2.18	1.73
					3	114	114	2.65	6.75	2.25	1.91
					4	116	116	4.07	10.82	3.41	2.28
					5	119	119	13.28	24.10	11.22	4.07
					6	121	121	12.05	36.15	10.23	5.09

Appendix B
Detailed Exhaust Emission Results

Veh	Fuel	°F	Cycle	Test Date	Bag	Exhaust Emissions (grams/mile) NOx	HC	CO2	CO	MPG
SB-36	9.0	95	LA-4	11-01-90	1	5.7	5.7	602	116	11.1
					2	2.8	3.9	734	82	10.1
					3	5.5	1.2	708	13.3	12.1
					4	3.1	1.7	774	15.0	11.1
					5	5.9	1.3	702	10.9	12.3
					6	3.1	1.8	748	19.2	11.3
SB-36	9.0	95	NYCC	11-05-90	1	3.53	21.2	1186	419	4.6
					2	6.14	4.65	1535	54.9	5.4
					3	5.72	4.41	1534	55.1	5.4
					4	5.46	4.57	1531	62.2	5.4
					5	5.59	4.48	1520	62.5	5.4
					6	5.30	4.36	1461	60.1	5.7
SB-36	9.0	105	LA-4	11-06-90	1	8.5	5.0	623	108	11.0
					2	1.9	10.4	529	295	8.7
					3	8.2	5.9	557	143	11.1
					4	2.0	11.7	520	317	8.4
					5	7.8	6.4	544	153	11.0
					6	1.9	12.0	503	312	8.6
SB-36	9.0	105	NYCC	11-07-90	1	3.45	24.7	1053	606	4.3
					2	2.31	28.2	971	667	4.2
					3	2.11	29.9	941	685	4.2
					4	1.87	33.0	894	706	4.2
					5	2.00	33.5	920	706	4.2
					6	2.22	32.4	944	689	4.2
SB-38	9.0	95	LA-4	11-16-90	1	3.0	1.66	359	11.0	23.3
					2	0.96	1.23	415	5.0	20.8
					3	1.47	1.04	333	4.8	25.9
					4	1.02	1.12	396	2.3	22.0
					5	1.44	0.88	332	4.6	26.0
					6	1.06	1.13	391	2.2	22.3
SB-38	9.0	95	NYCC	11-19-90	1	4.63	4.96	692	26.9	11.8
					2	1.63	2.51	667	11.5	12.8
					3	1.75	2.30	664	11.5	12.9
					4	1.72	2.19	657	10.7	13.0
					5	1.72	2.22	650	10.9	13.2
					6	1.73	2.16	649	10.4	13.2

Appendix B
Detailed Exhaust Emission Results

Veh	Fuel	°F	Cycle	Test Date	Bag	Exhaust Emissions (grams/mile) NOx	HC	CO2	CO	MPG
SB-38	9.0	105	LA-4	11-20-90	1	3.4	1.51	367	8.8	23.0
					2	1.05	0.98	398	2.7	21.9
					3	1.74	0.78	332	3.4	26.1
					4	1.23	1.04	387	2.3	22.6
					5	1.87	0.87	327	3.3	26.5
					6	1.27	1.05	387	2.3	22.5
SB-38	9.0	105	NYCC	11-21-90	1	5.34	5.87	627	49.8	12.3
					2	2.27	4.09	640	25.6	12.8
					3	2.14	3.31	645	17.6	13.0
					4	2.19	2.82	643	13.6	13.2
					5	2.21	3.02	653	15.7	12.9
					6	2.26	3.11	645	16.7	13.0
SB-39	9.0	95	LA-4	11-01-90	1	1.02	0.56	359	6.1	24.0
					2	0.53	0.10	366	4.6	23.8
					3	0.67	0.18	333	3.8	26.1
					4	0.63	0.12	362	4.1	24.1
					5	0.67	0.16	330	3.8	26.4
					6	0.64	0.12	365	4.2	23.9
SB-39	9.0	95	NYCC	11-02-90	1	2.1	1.8	734	31.0	11.3
					2	1.1	0.7	656	20.1	12.9
					3	1.1	0.9	667	21.4	12.6
					4	1.4	0.8	659	19.6	12.8
					5	1.5	0.7	645	17.4	13.2
					6	1.8	0.7	650	17.8	13.1
SB-39	9.0	105	LA-4	10-31-90	1	1.19	0.59	356	9.7	23.8
					2	0.57	0.10	360	5.0	24.1
					3	0.97	0.14	335	2.3	26.2
					4	0.67	0.09	359	3.1	24.4
					5	0.98	0.13	335	2.6	26.2
					6	0.60	0.08	355	3.1	24.7
SB-39	9.0	105	NYCC	11-07-90	1	2.99	1.78	685	23.8	12.2
					2	1.69	0.65	641	17.0	13.3
					3	2.02	1.08	642	18.9	13.2
					4	2.01	0.61	631	14.1	13.6
					5	2.12	0.59	643	15.3	13.3
					6	2.29	0.63	636	14.4	13.4

Appendix B
Detailed Exhaust Emission Results

Veh	Fuel	°F	Cycle	Test Date	Bag	Exhaust Emissions (grams/mile) NOx	HC	CO2	CO	MPG
SB-40	9.0	95	LA-4	11-07-90	1	2.58	1.60	526	12.9	16.1
-					2	0.97	0.24	539	3.3	16.3
					3	1.09	0.19	470	3.8	18.6
					4	1.05	0.16	535	3.0	16.4
					5	0.98	0.16	475	3.6	18.5
					6	1.01	0.14	536	2.5	16.4
SB-40	9.0	95	NYCC	11-08-90	1	4.49	4.76	1061	43.8	7.8
					2	1.37	1.29	977	17.0	8.8
					3	1.22	0.72	973	12.0	8.9
					4	1.36	0.75	963	13.2	9.0
					5	1.37	0.64	975	11.7	8.9
					6	1.50	0.63	969	10.9	9.0
SB-40	9.0	105	LA-4	11-09-90	1	3.5	1.47	514	8.1	16.7
					2	1.08	0.15	520	2.0	17.0
					3	1.12	0.15	486	2.5	18.1
					4	1.14	0.16	530	2.4	16.6
					5	1.08	0.18	481	2.6	18.3
					6	0.90	0.17	529	2.6	16.7
SB-40	9.0	105	NYCC	11-12-90	1	6.11	4.43	1030	56.3	7.8
					2	2.66	1.35	982	15.1	8.8
					3	2.24	0.79	979	11.4	8.9
					4	2.42	0.63	1079	7.9	8.1
					5	2.50	0.68	1018	11.7	8.5
					6	2.44	0.67	997	11.3	8.7
SB-41	9.0	95	LA-4	11-09-90	1	5.4	2.9	330	11.8	24.8
					2	3.2	2.6	347	21.8	22.8
					3	5.2	1.5	312	6.3	27.2
					4	3.8	2.1	343	13.8	23.9
					5	5.4	1.6	307	10.3	27.0
					6	4.5	2.0	346	10.6	24.0
SB-41	9.0	95	NYCC	11-12-90	1	5.6	15.1	638	71.6	11.1
					2	4.8	9.5	581	58.5	12.6
					3	4.7	8.3	551	55.2	13.4
					4	4.3	9.3	557	58.1	13.1
					5	4.4	8.8	548	57.9	13.3
					6	4.5	8.8	537	52.0	13.7

Appendix B
Detailed Exhaust Emission Results

Veh	Fuel	°F	Cycle	Test Date	Bag	Exhaust Emissions (grams/mile) NOx	HC	CO2	CO	MPG
SB-41	9.0	105	LA-4	11-13-90	1	4.3	2.6	324	14.9	25.0
					2	3.8	2.5	351	18.2	22.8
					3	4.3	1.8	304	11.5	26.9
					4	4.2	2.1	351	15.3	23.0
					5	5.0	1.7	304	10.9	26.9
					6	4.5	2.3	344	15.9	23.3
SB-41	9.0	105	NYCC	11-14-90	1	4.1	14.6	595	87	11.4
					2	4.3	7.7	575	49.0	13.1
					3	3.6	7.1	558	70.5	12.8
					4	4.3	7.0	569	43.3	13.5
					5	4.3	6.1	576	39.1	13.5
					6	4.8	5.9	557	28.8	14.3
SB-42	9.0	95	LA-4	11-06-90	1	4.5	2.0	335	3.0	25.7
					2	2.5	0.4	371	0.1	23.8
					3	3.7	0.4	312	0.8	28.2
					4	3.0	0.5	356	0.0	24.9
					5	3.9	0.3	309	0.7	28.6
					6	2.9	0.4	351	0.0	25.2
SB-42	9.0	95	NYCC	11-14-90	1	4.4	6.9	717	2.5	12.0
					2	3.1	2.3	646	0.1	13.6
					3	3.3	1.9	615	0.7	14.3
					4	3.2	1.7	612	1.9	14.3
					5	3.2	2.0	620	0.3	14.2
					6	3.2	1.9	599	0.5	14.7
SB-42	9.0	105	LA-4	11-09-90	1	6.4	1.5	340	1.9	25.6
					2	4.0	0.3	358	0.1	24.8
					3	5.5	0.3	317	0.8	27.8
					4	3.9	0.2	354	0.4	25.0
					5	5.0	0.2	314	0.8	28.1
					6	3.6	0.2	355	1.3	24.9
SB-42	9.0	105	NYCC	11-12-90	1	7.9	4.9	684	2.3	12.6
					2	6.1	1.3	637	0.2	13.9
					3	5.6	1.1	620	0.5	14.2
					4	5.5	1.0	627	1.4	14.0
					5	5.9	1.0	630	1.9	14.0
					6	5.3	0.9	631	4.5	13.9

Appendix B
Detailed Exhaust Emission Results

Veh	Fuel	°F	Cycle	Test Date	Bag	Exhaust Emissions (grams/mile) NOx	HC	CO2	CO	MPG
SB-43	9.0	95	LA-4	11-08-90	1	3.6	1.4	470	26.0	17.2
					2	1.7	0.4	462	6.1	18.8
					3	3.6	0.4	443	5.8	19.6
					4	2.0	0.4	456	5.6	19.1
					5	3.5	0.3	438	5.6	19.8
					6	1.9	0.4	444	6.4	19.5
SB-43	9.0	95	NYCC	11-09-90	1	5.5	5.5	1035	85	7.5
					2	3.6	1.8	1003	42.1	8.3
					3	4.0	2.2	934	42.7	8.8
					4	7.0	3.4	909	51.9	8.9
					5	4.8	2.7	895	43.7	9.1
					6	5.4	2.8	885	49.0	9.1
SB-43	9.0	105	LA-4	11-12-90	1	4.2	1.1	489	35	16.2
					2	2.9	0.2	497	2.6	17.7
					3	4.7	0.4	464	11.2	18.4
					4	3.6	0.3	505	4.0	17.4
					5	4.3	0.5	449	17.5	18.6
					6	3.1	0.3	484	3.7	18.1
SB-43	9.0	105	NYCC	11-14-90	1	4.9	4.0	1130	68.4	7.1
					2	3.7	1.2	1059	34.4	8.0
					3	3.8	1.0	1011	29.2	8.4
					4	3.5	1.0	983	25.9	8.6
					5	3.6	1.1	991	28.1	8.5
					6	3.4	1.0	963	24.1	8.8
SB-44	9.0	95	LA-4	11-13-90	1	1.1	2.0	572	36	14.0
					2	0.5	0.6	601	7.9	14.4
					3	0.7	0.8	526	11.1	16.3
					4	0.6	0.6	594	7.6	14.6
					5	0.7	0.9	525	12.0	16.3
					6	0.7	0.5	555	5.7	15.7
SB-44	9.0	95	NYCC	11-09-90	1	2.1	6.2	1140	106	6.7
					2	1.6	4.1	1072	62.5	7.5
					3	2.7	4.3	1072	51.1	7.6
					4	2.5	3.8	1080	40.9	7.7
					5	1.6	3.0	1083	35.6	7.7
					6	2.5	3.0	1079	34.5	7.8

Appendix B
Detailed Exhaust Emission Results

Veh	Fuel	°F	Cycle	Test Date	Bag	Exhaust Emissions (grams/mile) NOx	HC	CO2	CO	MPG
SB-44	9.0	105	LA-4	11-12-90	1	1.8	1.7	569	27.1	14.4
					2	1.2	0.4	604	2.0	14.6
					3	1.5	0.4	530	5.4	16.5
					4	1.3	0.3	594	1.8	14.9
					5	1.4	0.3	523	4.9	16.7
					6	1.5	0.3	588	2.0	15.0
SB-44	9.0	105	NYCC	11-14-90	1	3.1	7.3	1132	88	6.9
					2	1.8	2.4	1111	38.1	7.5
					3	1.7	1.9	1080	36.3	7.8
					4	2.1	2.8	1160	42.3	7.2
					5	2.7	2.6	1230	43.4	6.8
					6	3.2	2.3	1179	37.4	7.1
SB-45	9.0	95	LA-4	11-09-90	1	5.1	1.9	431	22.0	18.8
					2	2.4	1.9	440	9.8	19.3
					3	4.7	1.6	391	14.3	21.2
					4	2.7	2.0	433	10.2	19.5
					5	4.3	1.7	389	19.4	20.9
					6	2.7	2.0	431	10.6	19.6
SB-45	9.0	95	NYCC	11-12-90	1	6.3	4.8	845	26.3	9.8
					2	4.5	4.0	728	19.1	11.5
					3	4.9	3.7	708	13.2	12.0
					4	4.4	3.9	724	16.2	11.7
					5	4.5	3.8	728	19.2	11.5
					6	4.3	3.7	705	15.8	12.0
SB-45	9.0	105	LA-4	11-13-90	1	5.2	1.7	408	13.0	20.5
					2	3.4	1.8	439	7.5	19.5
					3	5.3	1.3	379	8.3	22.4
					4	3.2	1.7	428	7.2	20.0
					5	5.0	1.3	377	8.3	22.5
					6	3.1	1.7	426	7.9	20.0
SB-45	9.0	105	NYCC	11-14-90	1	4.9	4.5	782	17.6	10.8
					2	3.8	4.2	706	14.9	12.0
					3	4.0	4.0	693	10.6	12.3
					4	4.2	3.8	691	11.2	12.3
					5	4.1	3.8	692	12.3	12.3
					6	4.0	3.7	692	14.8	12.2

Appendix B
Detailed Exhaust Emission Results

Veh	Fuel	°F	Cycle	Test Date	Bag	Exhaust Emissions (grams/mile) NOx	HC	CO2	CO	MPG
SB-46	9.0	95	LA-4	10-31-90	1	3.1	1.6	513	22.1	16.1
					2	1.7	0.3	529	3.4	16.6
					3	2.1	0.3	460	4.4	19.0
					4	1.5	0.2	486	3.6	18.0
					5	2.0	0.3	439	4.3	19.9
					6	1.5	0.3	476	5.9	18.3
SB-46	9.0	95	NYCC	11-01-90	1	3.9	4.0	974	39.7	8.5
					2	2.3	1.3	908	17.8	9.5
					3	2.2	0.8	871	13.8	9.9
					4	2.1	0.8	875	16.3	9.8
					5	2.5	0.7	868	11.8	10.0
					6	2.3	0.8	894	12.5	9.7
SB-46	9.0	105	LA-4	11-02-90	1	3.5	1.3	480	18.1	17.3
					2	2.2	0.3	509	4.3	17.2
					3	2.9	0.3	450	3.8	19.5
					4	2.3	0.2	499	4.3	17.5
					5	2.8	0.2	438	3.9	20.0
					6	2.3	0.2	487	4.6	17.9
SB-46	9.0	105	NYCC	11-07-90	1	6.8	3.6	977	24.6	8.6
					2	4.7	1.0	894	10.3	9.7
					3	4.7	0.7	888	8.0	9.8
					4	4.9	0.7	895	7.3	9.8
					5	4.5	0.7	902	11.1	9.6
					6	4.2	0.8	881	13.2	9.8
SB-47	9.0	95	LA-4	11-19-90	1	2.7	0.8	332	12.0	25.1
					2	1.9	0.3	370	2.7	23.7
					3	2.1	0.2	311	1.5	28.3
					4	2.1	0.3	354	1.4	24.9
					5	2.3	0.3	307	2.6	28.5
					6	2.2	0.3	355	3.4	24.6
SB-47	9.0	95	NYCC	11-20-90	1	3.9	3.6	613	58.7	12.4
					2	2.6	1.2	601	14.1	14.2
					3	2.4	1.0	601	12.3	14.3
					4	2.6	1.1	591	13.3	14.4
					5	2.8	0.9	588	9.5	14.7
					6	3.2	1.5	564	19.4	14.8

Appendix B
Detailed Exhaust Emission Results

Veh	Fuel	°F	Cycle	Test Date	Bag	Exhaust Emissions (grams/mile) NOx	HC	CO2	CO	MPG
SB-47	9.0	105	LA-4	11-21-90	1	2.7	1.1	326	19.1	24.7
					2	1.8	0.3	378	4.1	23.0
					3	2.1	0.3	314	6.1	27.3
					4	2.1	0.3	372	2.9	23.5
					5	2.1	0.3	314	6.2	27.4
					6	2.1	0.3	365	3.2	23.9
SB-47	9.0	105	NYCC	11-23-90	1	3.5	5.2	549	86	12.7
					2	2.7	2.4	591	35.2	13.6
					3	2.8	1.7	603	22.7	13.8
					4	2.8	1.8	595	22.1	14.0
					5	3.0	1.5	592	17.9	14.2
					6	2.6	1.7	594	24.1	13.9
SB48	9.0	45	LA-4	03-23-91	1	1.4	7.1	632	151	10.0
					2	0.8	0.8	716	26.6	11.7
					3	0.9	0.3	630	18.6	13.5
					4	0.6	0.4	682	11.1	12.7
					5	0.9	0.3	608	16.0	14.0
					6	0.7	0.4	663	12.0	13.0
SB48	9.0	45	NYCC	03-29-91	1	2.7	29.0	1260	425	4.4
					2	2.5	2.0	1491	48.0	5.6
					3	2.2	1.6	1399	37.6	6.1
					4	2.2	1.5	1370	37.1	6.2
					5	2.1	1.6	1329	34.2	6.4
					6	1.8	2.1	1307	32.7	6.5
SB48	9.0	95	LA-4	07-18-91	1	3.0	1.3	605	21.9	13.8
					2	1.3	0.4	666	7.1	13.1
					3	1.5	0.3	593	12.6	14.5
					4	1.0	0.4	641	9.3	13.5
					5	1.8	0.3	591	11.1	14.6
					6	1.2	0.4	641	8.1	13.6
SB48	9.0	95	NYCC	07-23-91	1	3.2	14.6	1144	272	5.5
					2	3.5	3.2	1283	63.8	6.4
					3	3.1	2.9	1249	59.5	6.6
					4	2.7	2.7	1288	62.1	6.4
					5	3.0	3.1	1315	76.0	6.2
					6	3.3	3.2	1321	88.0	6.0

Appendix B
Detailed Exhaust Emission Results

Veh	Fuel	°F	Cycle	Test Date	Bag	Exhaust Emissions (grams/mile) NOx	HC	CO2	CO	MPG
SB48	9.0	105	LA-4	07-29-91	1	3.4	2.1	650	35.2	12.5
					2	2.3	0.5	773	13.3	11.2
					3	1.6	0.4	660	34.0	12.4
					4	1.3	0.5	732	29.2	11.4
					5	1.4	0.4	644	41.9	12.5
					6	1.3	0.5	729	30.7	11.4
SB48	9.0	105	NYCC	07-31-91	1	4.1	4.5	1468	73.4	5.6
					2	3.8	0.9	1549	29.1	5.6
					3	2.5	0.8	1488	48.1	5.7
					4	3.0	0.9	1480	49.5	5.7
					5	1.9	1.1	1443	83.9	5.6
					6	2.0	1.2	1466	102	5.4
SB-49	9.0	95	LA-4	11-19-90	1	1.2	0.5	361	7.9	23.7
					2	0.6	0.1	384	1.0	23.0
					3	1.3	0.2	277	1.8	31.7
					4	0.8	0.0	382	0.5	23.2
					5	1.6	0.1	335	0.8	26.4
					6	0.8	0.0	378	0.5	23.5
SB-49	9.0	95	NYCC	11-21-90	1	2.5	1.2	852	20.2	10.0
					2	2.0	0.7	786	10.0	11.0
					3	1.8	0.6	749	8.2	11.6
					4	1.6	0.6	759	4.8	11.6
					5	2.1	0.7	763	4.2	11.5
					6	2.2	0.7	748	4.8	11.7
SB-49	9.0	105	LA-4	11-23-90	1	2.0	0.5	352	5.2	24.5
					2	0.9	0.1	376	1.2	23.5
					3	2.0	0.1	330	0.9	26.8
					4	1.0	0.1	375	0.6	23.6
					5	2.2	0.1	334	1.1	26.5
					6	1.0	0.0	376	0.7	23.5
SB-49	9.0	105	NYCC	11-26-90	1	2.5	1.6	706	19.9	12.0
					2	1.6	0.4	677	3.5	13.0
					3	2.0	0.5	670	4.8	13.1
					4	2.0	0.4	671	3.0	13.1
					5	1.9	0.5	660	4.5	13.3
					6	2.0	0.5	670	5.5	13.1

Appendix B
Detailed Exhaust Emission Results

Veh	Fuel	°F	Cycle	Test Date	Bag	Exhaust Emissions (grams/mile) NOx	HC	CO2	CO	MPG
SB-50	9.0	45	LA-4	03-23-91	1	0.9	2.6	528	59.9	14.1
					2	0.8	0.2	543	3.1	16.2
					3	0.9	0.1	468	2.5	18.8
					4	0.7	0.1	545	2.5	16.2
					5	1.0	0.1	461	2.5	19.1
					6	0.7	0.1	518	3.3	17.0
SB-50	9.0	45	NYCC	03-29-91	1	1.2	9.8	1020	186	6.6
					2	1.4	1.3	964	31.3	8.7
					3	1.4	0.8	931	25.6	9.1
					4	1.2	0.7	920	20.0	9.3
					5	1.3	0.6	919	19.3	9.3
					6	1.2	0.6	912	18.9	9.4
SB50	9.0	95	LA-4	07-08-91	1	2.1	0.8	549	15.1	15.4
					2	1.7	0.1	621	6.2	14.1
					3	2.0	0.2	532	5.5	16.4
					4	1.9	0.2	626	8.7	13.9
					5	2.1	0.1	537	5.6	16.2
					6	2.0	0.1	620	6.2	14.1
SB50	9.0	95	NYCC	07-11-91	1	2.8	3.5	1197	55.8	6.9
					2	2.5	1.3	1116	36.0	7.6
					3	2.5	1.3	1174	34.3	7.2
					4	2.3	1.3	1108	43.3	7.5
					5	2.4	1.4	1103	45.4	7.5
					6	2.8	1.2	1103	42.5	7.6
SB50	9.0	105	LA-4	07-15-91	1	2.9	0.8	544	13.3	15.7
					2	2.1	0.3	598	13.7	14.3
					3	2.2	0.2	524	10.0	16.4
					4	2.4	0.3	602	17.2	14.1
					5	2.3	0.2	511	10.0	16.8
					6	2.6	0.3	619	20.3	13.6
SB50	9.0	105	NYCC	07-17-91	1	6.5	3.5	1102	64.0	7.3
					2	5.4	1.3	1082	40.6	7.7
					3	4.8	1.2	1055	41.3	7.9
					4	5.9	1.3	1066	45.6	7.8
					5	5.4	1.3	1063	47.4	7.8
					6	5.3	1.3	1055	45.2	7.9

Appendix B
Detailed Exhaust Emission Results

Veh	Fuel	°F	Cycle	Test Date	Bag	Exhaust Emissions (grams/mile) NOx	HC	CO2	CO	MPG
SB51	9.0	95	LA-4	07-15-91	1	0.5	0.0	455	3.5	19.3
					2	0.1	0.0	487	0.5	18.2
					3	0.2	0.1	432	1.0	20.5
					4	0.1	0.0	460	0.4	19.3
					5	0.2	0.1	434	1.1	20.4
					6	0.1	0.0	447	0.4	19.8
SB51	9.0	95	NYCC	07-18-91	1	2.0	1.3	947	7.5	9.2
					2	1.1	0.2	829	2.7	10.6
					3	1.1	0.2	817	3.5	10.8
					4	1.0	0.2	827	6.1	10.6
					5	1.2	0.2	802	5.6	10.9
					6	1.5	0.2	806	5.7	10.9
SB51	9.0	105	LA-4	07-24-91	1	0.5	0.5	493	3.0	17.8
					2	0.3	0.0	466	0.2	19.0
					3	0.3	0.1	437	1.0	20.2
					4	0.3	0.0	455	0.4	19.5
					5	0.3	0.1	431	1.0	20.5
					6	0.4	0.0	448	0.4	19.8
SB51	9.0	105	NYCC	07-25-91	1	1.7	1.4	879	7.8	9.9
					2	0.7	0.3	799	4.2	11.0
					3	0.8	0.3	778	7.3	11.2
					4	0.8	0.3	774	12.4	11.2
					5	1.0	0.3	782	14.2	11.0
					6	1.0	0.3	775	15.0	11.1
SB52	9.0	95	LA-4	07-29-91	1	1.8	2.1	587	19.3	14.2
					2	0.7	1.9	678	42.8	11.8
					3	1.3	1.6	497	24.0	16.5
					4	0.8	1.4	669	31.4	12.3
					5	1.3	1.6	514	19.7	16.1
					6	0.8	1.4	600	45.6	13.1
SB52	9.0	95	NYCC	07-30-91	1	2.3	7.4	1291	66.2	6.3
					2	1.4	7.6	1169	132	6.3
					3	1.3	7.4	1042	136	6.9
					4	1.3	9.5	1021	170	6.7
					5	1.4	12.8	944	183	7.0
					6	1.3	13.8	910	202	7.0

Appendix B
Detailed Exhaust Emission Results

Veh	Fuel	°F	Cycle	Test Date	Bag	Exhaust Emissions (grams/mile) NOx	HC	CO2	CO	MPG
SB52	9.0	105	LA-4	07-31-91	1	1.7	2.1	570	14.9	14.8
					2	1.0	1.8	689	32.3	11.9
					3	1.6	1.9	528	19.6	15.7
					4	1.0	1.6	667	31.5	12.3
					5	1.7	1.6	527	18.8	15.8
					6	0.9	2.1	685	40.7	11.7
SB52	9.0	105	NYCC	08-12-91	1	1.3	8.9	1142	108	6.6
					2	1.1	6.2	1039	190	6.5
					3	1.0	7.0	1000	219	6.5
					4	1.1	4.5	1035	127	7.1
					5	1.1	5.1	1022	148	7.0
					6	1.2	7.0	1044	140	6.9
SB53	9.0	95	LA-4	07-25-91	1	5.0	4.4	596	48.2	13.0
					2	4.2	4.5	657	50.4	11.8
					3	4.7	3.7	548	49.4	13.9
					4	3.3	4.8	633	63.1	11.9
					5	4.6	3.7	545	51.7	13.9
					6	3.6	5.0	634	68.8	11.7
SB53	9.0	95	NYCC	07-30-91	1	8.2	13.1	1334	166	5.4
					2	6.7	10.3	1150	132	6.4
					3	6.6	11.6	1222	190	5.7
					4	6.6	12.0	1199	206	5.7
					5	6.5	12.0	1218	205	5.6
					6	6.3	12.3	1204	226	5.6
SB53	9.0	105	LA-4	07-31-91	1	7.8	5.1	647	63.5	11.6
					2	5.3	6.1	693	114	10.0
					3	6.5	5.3	574	109	11.7
					4	4.0	5.5	538	116	12.0
					5	6.1	5.4	560	116	11.7
					6	4.8	6.8	675	146	9.6
SB53	9.0	105	NYCC	08-01-91	1	7.5	13.2	1343	182	5.3
					2	6.4	12.5	1218	222	5.5
					3	5.6	13.7	1192	285	5.3
					4	5.2	13.8	1149	310	5.3
					5	4.9	14.1	1155	321	5.2
					6	4.7	14.2	1134	330	5.2

Appendix B
Detailed Exhaust Emission Results

Veh	Fuel	°F	Cycle	Test Date	Bag	Exhaust Emissions (grams/mile) NOx	HC	CO2	CO	MPG
SB54	9.0	95	LA-4	08-22-91	1	3.6	4.9	523	57.5	14.1
					2	2.3	6.4	622	38.9	12.6
					3	5.0	4.3	532	51.3	14.2
					4	2.7	5.0	569	24.5	14.3
					5	4.2	4.4	503	100	13.2
					6	2.8	4.9	558	32.5	14.2
SB54	9.0	95	NYCC	08-23-91	1	2.6	19.3	1054	209	6.2
					2	3.4	17.7	1038	101	7.1
					3	3.1	17.5	1001	91.8	7.4
					4	3.1	17.7	1010	104	7.2
					5	3.1	17.8	989	98.9	7.4
					6	3.0	18.2	995	110	7.2
SB54	9.0	105	LA-4	08-26-91	1	4.9	6.0	514	65.0	14.0
					2	3.3	5.1	565	29.2	14.2
					3	5.4	4.4	496	124	12.6
					4	3.0	6.2	610	82.3	11.7
					5	4.5	4.1	482	72.6	14.6
					6	2.5	4.8	530	53.4	14.1
SB54	9.0	105	NYCC	08-27-91	1	3.8	19.0	1038	278	5.8
					2	4.5	16.2	1008	93.6	7.4
					3	4.2	15.9	1016	120	7.1
					4	4.1	14.9	985	150	7.0
					5	4.2	13.3	993	158	6.9
					6	4.2	13.3	989	178	6.8

Appendix C
Test Conditions

Veh	Fuel	°F	Cycle	Test Date	Bag	Temperatures Dry	Temperatures Wet	Barometric Pressure	Distance (Miles)
SB-36	9.0	95	LA-4	11-01-90	1	96	74	29.31	3.573
					2	95	75	29.31	3.829
					3	97	77	29.31	3.574
					4	94	76	29.31	3.842
					5	96	77	29.31	3.593
					6	97	78	29.31	3.824
SB-36	9.0	95	NYCC	11-05-90	1	95	79	28.76	1.158
					2	95	79	28.76	1.172
					3	96	80	28.76	1.172
					4	96	80	28.76	1.184
					5	96	81	28.76	1.186
					6	95	80	28.76	1.186
SB-36	9.0	105	LA-4	11-06-90	1	105	85	29.38	3.605
					2	105	86	29.38	3.883
					3	105	87	29.38	3.609
					4	105	88	29.38	3.887
					5	106	88	29.38	3.593
					6	106	88	29.38	3.877
SB-36	9.0	105	NYCC	11-07-90	1	106	85	29.51	1.168
					2	105	85	29.51	1.195
					3	105	86	29.51	1.197
					4	105	86	29.51	1.204
					5	105	87	29.51	1.188
					6	105	87	29.51	1.191
SB-38	9.0	95	LA-4	11-16-90	1	96	76	29.43	3.530
					2	97	78	29.43	3.835
					3	97	79	29.43	3.577
					4	96	79	29.43	3.851
					5	97	79	29.43	3.577
					6	96	80	29.43	3.864
SB-38	9.0	95	NYCC	11-19-90	1	94	76	29.29	1.196
					2	94	77	29.29	1.202
					3	94	77	29.29	1.210
					4	95	78	29.29	1.208
					5	95	78	29.29	1.206
					6	95	78	29.29	1.203

Appendix C
Test Conditions

Veh	Fuel	°F	Cycle	Test Date	Bag	Temperatures Dry	Wet	Barometric Pressure	Distance (Miles)
SB-38	9.0	105	LA-4	11-20-90	1	104	83	29.42	3.626
					2	104	83	29.42	3.901
					3	105	85	29.42	3.609
					4	105	85	29.42	3.882
					5	105	86	29.42	3.611
					6	104	86	29.42	3.880
SB-38	9.0	105	NYCC	11-21-90	1	105	85	29.13	1.198
					2	105	85	29.13	1.206
					3	105	86	29.13	1.199
					4	105	86	29.13	1.202
					5	105	86	29.13	1.191
					6	105	86	29.13	1.191
SB-39	9.0	95	LA-4	11-01-90	1	95	75	29.25	3.576
					2	98	78	29.25	3.841
					3	95	77	29.25	3.571
					4	95	78	29.25	3.831
					5	95	77	29.25	3.585
					6	95	78	29.25	3.853
SB-39	9.0	95	NYCC	11-02-90	1	94	76	29.23	1.180
					2	94	76	29.23	1.176
					3	96	77	29.23	1.173
					4	96	78	29.23	1.173
					5	96	79	29.23	1.179
					6	96	80	29.23	1.173
SB-39	9.0	105	LA-4	10-31-90	1	107	79	29.34	3.599
					2	107	81	29.34	3.881
					3	107	83	29.34	3.589
					4	106	83	29.34	3.885
					5	108	84	29.34	3.604
					6	107	84	29.34	3.898
SB-39	9.0	105	NYCC	11-07-90	1	105	85	29.41	1.181
					2	105	86	29.41	1.196
					3	106	88	29.41	1.203
					4	105	89	29.41	1.197
					5	105	89	29.41	1.194
					6	105	88	29.41	1.188

Appendix C
Test Conditions

Veh	Fuel	°F	Cycle	Test Date	Bag	Temperatures Dry	Temperatures Wet	Barometric Pressure	Distance (Miles)
SB-40	9.0	95	LA-4	11-07-90	1	97	81	29.42	3.562
					2	94	80	29.42	3.833
					3	96	81	29.42	3.563
					4	95	81	29.42	3.842
					5	96	82	29.42	3.576
					6	96	82	29.42	3.824
SB-40	9.0	95	NYCC	11-08-90	1	95	80	29.50	1.194
					2	95	80	29.50	1.182
					3	95	81	29.50	1.177
					4	95	81	29.50	1.197
					5	95	81	29.50	1.188
					6	96	81	29.50	1.185
SB-40	9.0	105	LA-4	11-09-90	1	105	88	29.22	3.607
					2	105	89	29.22	3.890
					3	105	89	29.22	3.599
					4	107	90	29.22	3.878
					5	105	87	29.22	3.597
					6	104	87	29.22	3.881
SB-40	9.0	105	NYCC	11-12-90	1	104	90	29.50	1.185
					2	106	89	29.50	1.179
					3	106	89	29.50	1.177
					4	106	90	29.50	1.196
					5	106	90	29.50	1.175
					6	106	90	29.50	1.181
SB-41	9.0	95	LA-4	11-09-90	1	96	80	29.20	3.594
					2	96	81	29.20	3.882
					3	95	82	29.20	3.600
					4	95	83	29.20	3.892
					5	96	84	29.20	3.605
					6	95	84	29.20	3.892
SB-41	9.0	95	NYCC	11-12-90	1	95	78	29.65	1.201
					2	94	78	29.65	1.196
					3	94	78	29.65	1.195
					4	95	78	29.65	1.220
					5	95	78	29.65	1.199
					6	94	78	29.65	1.203

Appendix C
Test Conditions

Veh	Fuel	°F	Cycle	Test Date	Bag	Temperatures Dry	Temperatures Wet	Barometric Pressure	Distance (Miles)
SB-41	9.0	105	LA-4	11-13-90	1	105	88	29.66	3.589
					2	105	87	29.66	3.882
					3	105	88	29.66	3.601
					4	105	89	29.66	3.892
					5	105	90	29.66	3.606
					6	105	90	29.66	3.893
SB-41	9.0	105	NYCC	11-14-90	1	102	79	29.51	1.181
					2	104	80	29.51	1.176
					3	105	81	29.51	1.188
					4	106	81	29.51	1.175
					5	106	81	29.51	1.170
					6	105	82	29.51	1.187
SB-42	9.0	95	LA-4	11-06-90	1	95	81	29.46	3.587
					2	95	81	29.46	3.871
					3	95	82	29.46	3.589
					4	96	82	29.46	3.875
					5	96	82	29.46	3.582
					6	96	82	29.46	3.878
SB-42	9.0	95	NYCC	11-14-90	1	96	72	29.45	1.155
					2	96	72	29.45	1.185
					3	95	72	29.45	1.190
					4	96	72	29.45	1.170
					5	96	72	29.45	1.089
					6	96	73	29.45	1.163
SB-42	9.0	105	LA-4	11-09-90	1	105	89	29.21	3.664
					2	105	89	29.21	3.966
					3	106	90	29.21	3.663
					4	106	90	29.21	3.948
					5	106	90	29.21	3.590
					6	106	90	29.21	3.872
SB-42	9.0	105	NYCC	11-12-90	1	104	87	29.47	1.173
					2	104	88	29.47	1.185
					3	104	87	29.47	1.195
					4	104	88	29.47	1.188
					5	104	88	29.47	1.185
					6	104	88	29.47	1.189

Appendix C
Test Conditions

Veh	Fuel	°F	Cycle	Test Date	Bag	Temperatures Dry	Temperatures Wet	Barometric Pressure	Distance (Miles)
SB-43	9.0	95	LA-4	11-08-90	1	95	78	29.40	3.590
					2	95	80	29.40	3.860
					3	96	82	29.40	3.590
					4	95	82	29.40	3.860
					5	96	83	29.40	3.656
					6	96	83	29.40	3.909
SB-43	9.0	95	NYCC	11-09-90	1	95	79	29.36	1.191
					2	95	80	29.36	1.183
					3	95	81	29.36	1.192
					4	96	83	29.36	1.182
					5	95	82	29.36	1.195
					6	95	84	29.36	1.179
SB-43	9.0	105	LA-4	11-12-90	1	105	86	29.54	3.622
					2	105	86	29.54	3.906
					3	106	88	29.54	3.607
					4	105	88	29.54	3.903
					5	104	87	29.54	3.610
					6	105	88	29.54	3.900
SB-43	9.0	105	NYCC	11-14-90	1	104	79	29.42	1.170
					2	105	81	29.42	1.158
					3	105	81	29.42	1.180
					4	105	81	29.42	1.172
					5	105	82	29.42	1.196
					6	105	82	29.42	1.173
SB-44	9.0	95	LA-4	11-13-90	1	94	81	29.60	3.592
					2	94	80	29.60	3.878
					3	95	81	29.60	3.583
					4	95	81	29.60	3.851
					5	96	83	29.60	3.578
					6	96	84	29.60	3.872
SB-44	9.0	95	NYCC	11-09-90	1	95	80	29.13	1.195
					2	98	82	29.13	1.198
					3	100	84	29.13	1.194
					4	97	84	29.13	1.200
					5	95	84	29.13	1.193
					6	100	87	29.13	1.197

Appendix C
Test Conditions

Veh	Fuel	°F	Cycle	Test Date	Bag	Temperatures Dry	Temperatures Wet	Barometric Pressure	Distance (Miles)
SB-44	9.0	105	LA-4	11-12-90	1	104	89	29.56	3.554
					2	105	89	29.56	3.830
					3	105	89	29.56	3.542
					4	105	89	29.56	3.809
					5	106	89	29.56	3.531
					6	106	90	29.56	3.822
SB-44	9.0	105	NYCC	11-14-90	1	105	88	29.49	1.181
					2	105	87	29.49	1.191
					3	105	88	29.49	1.188
					4	104	89	29.49	1.173
					5	105	90	29.49	1.175
					6	107	92	29.49	1.176
SB-45	9.0	95	LA-4	11-09-90	1	95	81	29.18	3.626
					2	95	81	29.18	3.950
					3	95	82	29.18	3.647
					4	95	82	29.18	3.939
					5	95	83	29.18	3.612
					6	95	83	29.18	3.927
SB-45	9.0	95	NYCC	11-12-90	1	95	77	29.51	1.194
					2	95	78	29.51	1.200
					3	95	78	29.51	1.200
					4	95	78	29.51	1.206
					5	96	79	29.51	1.205
					6	95	78	29.51	1.200
SB-45	9.0	105	LA-4	11-13-90	1	105	88	29.46	3.600
					2	105	88	29.46	3.889
					3	105	89	29.46	3.603
					4	105	88	29.46	3.880
					5	105	88	29.46	3.606
					6	105	89	29.46	3.876
SB-45	9.0	105	NYCC	11-14-90	1	104	77	29.52	1.165
					2	106	79	29.52	1.182
					3	105	79	29.52	1.182
					4	105	79	29.52	1.170
					5	104	80	29.52	1.164
					6	104	80	29.52	1.151

Appendix C
Test Conditions

Veh	Fuel	°F	Cycle	Test Date	Bag	Temperatures Dry	Temperatures Wet	Barometric Pressure	Distance (Miles)
SB-46	9.0	95	LA-4	10-31-90	1	97	77	29.30	3.622
					2	96	77	29.30	3.916
					3	96	77	29.30	3.612
					4	96	77	29.30	3.901
					5	96	78	29.30	3.597
					6	96	78	29.30	3.926
SB-46	9.0	95	NYCC	11-01-90	1	95	73	29.32	1.164
					2	95	74	29.32	1.166
					3	95	75	29.32	1.166
					4	95	75	29.32	1.159
					5	95	76	29.32	1.171
					6	96	76	29.32	1.086
SB-46	9.0	105	LA-4	11-02-90	1	106	85	29.22	3.607
					2	106	85	29.22	3.868
					3	106	86	29.22	3.599
					4	106	86	29.22	3.881
					5	107	87	29.22	3.574
					6	107	87	29.22	3.852
SB-46	9.0	105	NYCC	11-07-90	1	105	86	29.38	1.191
					2	104	86	29.38	1.206
					3	104	86	29.38	1.196
					4	104	87	29.38	1.194
					5	104	87	29.38	1.192
					6	104	87	29.38	1.199
SB-47	9.0	95	LA-4	11-19-90	1	95	78	29.31	3.607
					2	95	78	29.31	3.879
					3	96	79	29.31	3.608
					4	96	80	29.31	3.881
					5	95	80	29.31	3.602
					6	95	80	29.31	3.896
SB-47	9.0	95	NYCC	11-20-90	1	96	77	29.40	1.179
					2	95	77	29.40	1.180
					3	96	77	29.40	1.181
					4	96	78	29.40	1.179
					5	96	78	29.40	1.181
					6	96	80	29.40	1.182

Appendix C
Test Conditions

Veh	Fuel	°F	Cycle	Test Date	Bag	Temperatures Dry	Wet	Barometric Pressure	Distance (Miles)
SB-47	9.0	105	LA-4	11-21-90	1	105	84	29.09	3.595
					2	105	85	29.09	3.848
					3	105	86	29.09	3.589
					4	105	85	29.09	3.865
					5	105	86	29.09	3.595
					6	105	86	29.09	3.848
SB-47	9.0	105	NYCC	11-23-90	1	105	81	28.96	1.205
					2	104	82	28.96	1.203
					3	104	82	28.96	1.208
					4	104	82	28.96	1.206
					5	104	83	28.96	1.206
					6	105	84	28.96	1.201
SB48	9.0	45	LA-4	03-23-91	1	43	37	28.85	3.660
					2	44	39	28.85	3.944
					3	46	40	28.85	3.621
					4	46	40	28.85	3.920
					5	45	40	28.85	3.621
					6	46	40	28.85	3.924
SB48	9.0	45	NYCC	03-29-91	1	42	37	29.14	1.185
					2	43	37	29.14	1.182
					3	44	38	29.14	1.192
					4	44	37	29.14	1.174
					5	45	38	29.14	1.227
					6	46	39	29.14	1.177
SB48	9.0	95	LA-4	07-18-91	1	96	75	29.18	3.598
					2	96	75	29.18	3.871
					3	96	74	29.18	3.589
					4	96	74	29.18	3.870
					5	96	75	29.18	3.596
					6	96	74	29.18	3.876
SB48	9.0	95	NYCC	07-23-91	1	94	71	29.13	1.166
					2	93	69	29.13	1.164
					3	94	71	29.13	1.164
					4	96	72	29.13	1.172
					5	97	73	29.13	1.172
					6	97	72	29.13	1.174

Appendix C
Test Conditions

Veh	Fuel	°F	Cycle	Test Date	Bag	Temperatures Dry	Temperatures Wet	Barometric Pressure	Distance (Miles)
SB48	9.0	105	LA-4	07-29-91	1	103	79	29.09	3.592
					2	105	81	29.09	3.852
					3	105	82	29.09	3.578
					4	105	81	29.09	3.850
					5	106	82	29.09	3.590
					6	105	81	29.09	3.858
SB48	9.0	105	NYCC	07-31-91	1	105	76	29.25	1.191
					2	105	77	29.25	1.171
					3	106	78	29.25	1.175
					4	106	80	29.25	1.179
					5	106	81	29.25	1.187
					6	105	80	29.25	1.165
SB-49	9.0	95	LA-4	11-19-90	1	94	75	29.34	3.600
					2	95	78	29.34	3.885
					3	96	80	29.34	3.607
					4	96	81	29.34	3.886
					5	95	81	29.34	3.602
					6	95	82	29.34	3.876
SB-49	9.0	95	NYCC	11-21-90	1	95	78	29.63	1.185
					2	96	79	29.63	1.180
					3	95	80	29.63	1.225
					4	96	81	29.63	1.182
					5	95	81	29.63	1.163
					6	95	81	29.63	1.169
SB-49	9.0	105	LA-4	11-23-90	1	105	83	28.84	3.596
					2	107	84	28.84	3.892
					3	106	85	28.84	3.608
					4	106	85	28.84	3.879
					5	106	85	28.84	3.594
					6	106	86	28.84	3.896
SB-49	9.0	105	NYCC	11-26-90	1	105	83	29.17	1.223
					2	106	84	29.17	1.224
					3	106	85	29.17	1.218
					4	107	85	29.17	1.217
					5	106	85	29.17	1.233
					6	105	84	29.17	1.211

Appendix C
Test Conditions

Veh	Fuel	°F	Cycle	Test Date	Bag	Temperatures Dry	Temperatures Wet	Barometric Pressure	Distance (Miles)
SB-50	9.0	45	LA-4	03-23-91	1	46	40	28.78	3.633
					2	45	39	28.78	3.901
					3	44	39	28.78	3.600
					4	45	39	28.78	3.900
					5	45	40	28.78	3.590
					6	45	39	28.78	3.897
SB-50	9.0	45	NYCC	03-29-91	1	42	37	29.15	1.214
					2	42	37	29.15	1.187
					3	43	37	29.15	1.182
					4	43	36	29.15	1.177
					5	43	37	29.15	1.182
					6	43	37	29.15	1.186
SB50	9.0	95	LA-4	07-08-91	1	96	76	29.17	3.595
					2	97	75	29.17	3.860
					3	97	76	29.17	3.577
					4	97	75	29.17	3.847
					5	96	77	29.17	3.558
					6	97	76	29.17	3.864
SB50	9.0	95	NYCC	07-11-91	1	95	74	29.18	1.166
					2	96	75	29.18	1.155
					3	96	74	29.18	1.166
					4	97	75	29.18	1.148
					5	96	74	29.18	1.161
					6	96	76	29.18	1.159
SB50	9.0	105	LA-4	07-15-91	1	107	79	29.39	3.594
					2	107	79	29.39	3.842
					3	108	80	29.39	3.577
					4	107	80	29.39	3.843
					5	108	80	29.39	3.591
					6	107	80	29.39	3.817
SB50	9.0	105	NYCC	07-17-91	1	109	91	29.15	1.189
					2	107	90	29.15	1.165
					3	106	89	29.15	1.180
					4	106	90	29.15	1.169
					5	106	90	29.15	1.166
					6	105	90	29.15	1.173

Appendix C
Test Conditions

Veh	Fuel	°F	Cycle	Test Date	Bag	Temperatures Dry	Wet	Barometric Pressure	Distance (Miles)
SB51	9.0	95	LA-4	07-15-91	1	98	76	29.38	3.601
					2	96	74	29.38	3.853
					3	95	73	29.38	3.585
					4	95	73	29.38	3.855
					5	95	73	29.38	3.583
					6	95	72	29.38	3.849
SB51	9.0	95	NYCC	07-18-91	1	98	78	29.05	1.163
					2	97	77	29.05	1.169
					3	97	76	29.05	1.174
					4	97	75	29.05	1.169
					5	97	75	29.05	1.186
					6	97	76	29.05	1.179
SB51	9.0	105	LA-4	07-24-91	1	103	80	29.21	3.593
					2	105	84	29.21	3.860
					3	105	83	29.21	3.590
					4	106	83	29.21	3.834
					5	107	83	29.21	3.580
					6	107	83	29.21	3.858
SB51	9.0	105	NYCC	07-25-91	1	104	80	29.24	1.189
					2	106	81	29.24	1.185
					3	106	82	29.24	1.187
					4	105	82	29.24	1.192
					5	105	82	29.24	1.191
					6	105	82	29.24	1.192
SB52	9.0	95	LA-4	07-29-91	1	95	75	29.13	3.550
					2	96	77	29.13	3.825
					3	97	78	29.13	3.580
					4	97	77	29.13	3.856
					5	98	78	29.13	3.570
					6	96	77	29.13	3.844
SB52	9.0	95	NYCC	07-30-91	1	94	75	29.25	1.274
					2	97	77	29.25	1.144
					3	96	77	29.25	1.155
					4	96	77	29.25	1.154
					5	96	78	29.25	1.153
					6	96	78	29.25	1.157

Appendix C
Test Conditions

Veh	Fuel	°F	Cycle	Test Date	Bag	Temperatures Dry	Wet	Barometric Pressure	Distance (Miles)
SB52	9.0	105	LA-4	07-31-91	1	103	77	29.19	3.578
					2	106	79	29.19	3.832
					3	106	81	29.19	3.581
					4	106	82	29.19	3.845
					5	106	83	29.19	3.582
					6	106	83	29.19	3.808
SB52	9.0	105	NYCC	08-12-91	1	105	77	29.41	1.195
					2	106	78	29.41	1.181
					3	106	79	29.41	1.185
					4	106	79	29.41	1.172
					5	106	79	29.41	1.191
					6	106	80	29.41	1.189
SB53	9.0	95	LA-4	07-25-91	1	95	73	29.31	3.597
					2	96	78	29.31	3.877
					3	96	74	29.31	3.596
					4	95	73	29.31	3.876
					5	96	74	29.31	3.587
					6	96	76	29.31	3.860
SB53	9.0	95	NYCC	07-30-91	1	95	75	29.24	1.184
					2	96	76	29.24	1.184
					3	95	77	29.24	1.161
					4	96	77	29.24	1.168
					5	96	77	29.24	1.176
					6	96	77	29.24	1.176
SB53	9.0	105	LA-4	07-31-91	1	105	78	29.27	3.598
					2	107	79	29.27	3.868
					3	105	81	29.27	3.577
					4	106	80	29.27	3.866
					5	106	81	29.27	3.596
					6	106	80	29.27	3.852
SB53	9.0	105	NYCC	08-01-91	1	104	77	29.24	1.187
					2	106	79	29.24	1.194
					3	105	80	29.24	1.178
					4	106	81	29.24	1.193
					5	107	82	29.24	1.190
					6	106	82	29.24	1.186

Appendix C
Test Conditions

Veh	Fuel	°F	Cycle	Test Date	Bag	Temperatures Dry	Wet	Barometric Pressure	Distance (Miles)
SB54	9.0	95	LA-4	08-22-91	1	94	74	29.21	3.590
					2	96	75	29.21	3.863
					3	95	74	29.21	3.588
					4	93	73	29.21	3.853
					5	96	77	29.21	3.585
					6	97	76	29.21	3.857
SB54	9.0	95	NYCC	08-23-91	1	95	76	29.38	1.182
					2	96	77	29.38	1.180
					3	95	78	29.38	1.194
					4	95	78	29.38	1.185
					5	95	78	29.38	1.196
					6	95	78	29.38	1.196
SB54	9.0	105	LA-4	08-26-91	1	103	85	29.30	3.597
					2	104	84	29.30	3.876
					3	105	86	29.30	3.594
					4	106	85	29.30	3.871
					5	107	85	29.30	3.603
					6	107	84	29.30	3.868
SB54	9.0	105	NYCC	08-27-91	1	104	88	29.26	1.180
					2	106	87	29.26	1.183
					3	107	87	29.26	1.178
					4	108	89	29.26	1.194
					5	108	89	29.26	1.184
					6	107	88	29.26	1.178